ARCADIS Design & Consultancy for natural and built assets

TRW AUTOMOTIVE U.S. LLC

POST-REMOVAL SITE CONTROL WORK PLAN

LA JOLLA SPRING CAVE COMPLEX
STANTON, MISSOURI

September 7, 2018

07P2 40555563 54
Superfund
OUOO 9/7/18

POST-REMOVAL SITE CONTROL OPERATION AND MAINTENANCE PLAN

La Jolla Spring Cave Complex

Stanton, Missouri

Michael Cobb
Principal Scientist

Royce Face, P.E.
Principal Engineer

John P. Shonfelt, P.G.
Senior Project Manager

Prepared for:

TRW Automotive U.S. LLC

Prepared by:

Arcadis U.S., Inc.
Rosehill Office Park 1
8725 Rosehill
Suite 350
Lenexa
Kansas 66215
Tel 913 492 0900
Fax 913 492 0902

Our Ref.:

KC001590.2018

Date:

September 7, 2018

CONTENTS

Acronyms and Abbreviations v
1 Introduction 1
1.1 Background 1
1.2 Phase 1 Air Control Program 2
1.3 Phase 2 Air Control Program 2
1.4 Sub-Slab Depressurization and Ventilation Systems 4
1.4.1 Ballroom SSDS 4
1.4.2 Vault Ventilation System 4
1.4.3 Gift Shop SSDS 5
1.5 Objectives 5
2 Cave Air Controls 6
2.1 Overview of Air Controls Operations 7
2.2 Vent-Well System 8
2.2.1 Design and Construction 9
2.2.2 General System Description 10
2.2.2.1 Vent Wells 10
2.2.2.2 Inlet Manifold and Piping 10
2.2.2.3 Blower Package 11
2.2.2.4 Vent Well Blower Building 11
2.2.2.5 Electrical Service and Blower Controls 11
2.2.2.6 Blower Controls 12
2.2.2.7 Remote Monitoring 13
2.2.2.8 Alarm Conditions 13
2.2.2.9 Access Road 13
2.2.3 Operational Procedures 13
2.2.3.1 Blower Rate Settings 13
2.2.3.1.1 Adjusting Blower Rate Settings Based on Stream Concentration 14
2.2.3.1.2 Adjustments to Blower Rate Settings Based on Outside Air Temperature 15
2.2.3.2 Start-up and Operation 16

2.2.3.3 Notification and Troubleshooting 17
2.3 Building Modifications 17
2.3.1 Front Entrance Building 17
2.3.2 Amphitheater Wall 17
2.3.2.1 Operation and Maintenance 17
2.4 Cave Stream GAC Water Treatment 18
2.5 Sub Slab Depressurization Systems and Vault Ventilation 18
2.5.1 General System Description 19
2.5.2 Ballroom SSDS 19
2.5.3 Gift Shop SSDS 19
2.5.4 Vault Ventilation System 19
2.5.5 Operation and Maintenance 20
2.6 Main Entrance Ventilation 20
2.6.1 General System Description 20
2.6.2 Operation and Maintenance 21
2.7 Airlock 21
2.8 Discontinued Air Controls 22
2.8.1 Portable GAC Air Cleaners 22
2.8.2 Permanganate Air Polishing Units 22
2.8.3 Amphitheater Entrance Fan 22
2.8.4 Main Entrance Wall Fan 22
3 Post-Removal Monitoring Program 24
3.1 Monitoring Frequency 24
3.2 Contingency Monitoring 26
3.2.1 Contingency Monitoring for PAM Exceedance 26
3.2.2 Contingency Monitoring for High Loading Rate Condition 26
3.2.3 Other Contingency Monitoring Scenarios 27
3.3 Compliance Personal Air Monitoring 28
3.4 Stationary Air Sampling 29
3.5 Cave Stream Sampling 30
3.6 Cave Stream Discharge Measurement 30

3.7 Continuous Climate Monitoring 31
3.8 Stream Stage Measurement 32
3.9 Manual Air Flow Measurement 32
4 Secondary Effects Monitoring 34
5 Contingency Planning 35
5.1 Flooding of Cavern 35
5.2 Loss of Vent-Well System Operation 35
6 Reporting/Communications 36
7 References 37

TABLES

Table 1 Summary of Cave Air Sampling Locations

Table 2 Contingency Planning

Table 3 Alarm Conditions

Table 4 Responsible Parties for Air Control Operation and Maintenance

FIGURES

Figure 1 Cavern Layout

Figure 2 Air Controls Within Cavern

Figure 3 Air Controls Outside of Cavern

Figure 4 SSDS System Layout

Figure 5 Measurement and Sampling Locations

APPENDICES

A Air Control Documentation: Specifications and Manuals

B Air Controls Operation and Maintenance

C Maintenance and Repair Contacts and Log

D Basis of Vent Well Design

E Vent Well Construction Logs

F Secondary Effects Monitoring Work Plan

G Indoor Air Sampling Procedures

ACRONYMS AND ABBREVIATIONS

bgs	below ground surface
CFM	cubic feet per minute
ELAP	Environmental Laboratory Approval Program
GAC	granular activated carbon
HOA	hand-off-auto
hp	horsepower
HVAC	heating, ventilation, and air conditioning
in. Hg	inches of mercury
kW	kilowatt
$\mu g/m^3$	micrograms per cubic meter
m/s	meters per second
MCE	Meramec Caverns Enterprises, Inc.
MDNR	Missouri Department of Natural Resources
PAM	personal air monitoring
PLC	programmable logic controller
PR	progress report
PVC	polyvinyl chloride
QAPP	Quality Assurance Project Plan
TCE	trichloroethene
TRW	TRW Automotive U.S. LLC
USEPA	United States Environmental Protection Agency
USGS	United States Geological Survey
VFD	variable frequency drive
VOC	volatile organic compound

1 INTRODUCTION

This Post-Removal Site Control Work Plan describes procedures for operations, maintenance, and monitoring of air controls at the La Jolla Spring Cave Complex (cavern), located in Stanton, Missouri. The air controls include a combination of active and passive measures that alter air flow in the cavern to reduce concentrations of trichloroethene (TCE) in cave air. These controls were installed and monitored in accordance with the Phase 2 Cave Air Work Plan (Arcadis 2016a) and Phase 2 Addendum Air Controls Work Plan (Arcadis 2016b).

This plan contains the following major components:

1. Information on operation and maintenance of each element of the cavern's air control program
2. A plan for integrated use of the cavern's air controls reflecting normal seasonal variability, with contingency plans for atypical situations
3. A plan for monitoring the effectiveness of the air controls at maintaining acceptable TCE concentrations, while monitoring potential secondary effects arising from those air controls.

The air controls and associated monitoring tasks are a collaborative effort of Meramec Caverns Enterprises, Inc. (MCE) and TRW Automotive U.S. LLC (TRW). The work is being performed under the Administrative Settlement Agreement and Order on Consent for Removal Action (July 20, 2016 Order). Once the July 2016 Order has been closed out, any changes associated with the air control systems at the cavern will continue to be addressed under the Administrative Settlement Agreement and Order on Consent for Remedial Investigation/Feasibility Study for the Oak Grove Village Well Superfund Site, Operable Unit 2, City of Sullivan Landfill RI/FS (Docket No. CERCLA-07-2009-014).

1.1 Background

The La Jolla Spring Cave Complex is a natural cave system in Franklin County, Missouri. **Figure 1** shows the layout of the cavern and its key features. A portion of the cavern is privately owned and operated by MCE as a tourist attraction. The toured areas of the cavern have been divided into three areas, including: Area 1, comprising the entrance building; Area 2, comprising the developed areas of the cavern between the entrance building and the airlock; and Area 3, comprising the developed areas of the cavern behind the airlock. An underground stream flows through Area 3 from west to east, discharging to the Meramec River at La Jolla Spring.

Sampling has identified TCE in both the cave stream and cave air. Concentrations in cave air have been found in excess of 6.0 micrograms per cubic meter ($\mu g/m^3$) averaged over an 8.5-hour workday period, the screening concentration specified by the United States Environmental Protection Agency (USEPA).

Starting in April 2015, TRW began working collaboratively with MCE, the United States Geological Survey (USGS), USEPA, and the Missouri Department of Natural Resource (MDNR) to implement a series of air control measures and air monitoring programs, as described below.

1.2 Phase 1 Air Control Program

Preliminary testing to evaluate ways to control TCE concentrations in cave air was conducted in 2015, in accordance with the Cave Air Work Plan (Arcadis 2015). The plan entailed evaluating two potential air control measures:

- An air barrier (or air dam), which would have been located upstream of the Jungle Room, to limit the flow of air from deeper in the cavern. After further study, this concept was abandoned out of concern that the cavern's frequent flooding would pose major design and operational challenges.
- An airlock, located in the "Dip" area between Areas 2 and 3, to isolate the front area of the cavern (including the entrance building) from air flowing from deeper in the cavern. The airlock was constructed in June 2015 as a temporary structure that would allow testing and, if effective, provide interim air control until a permanent structure could be constructed.

As an additional measure, MCE reconfigured the Amphitheater area of the cavern to remove obstructions to air flow and increase air circulation through the portion of the cavern west (up-cave) of the airlock. This work was completed in September 2015. Periodic air sampling and related investigations were completed throughout 2015 to evaluate performance of the air control measures and improve understanding of air transport patterns.

1.3 Phase 2 Air Control Program

On February 2, 2016, Arcadis submitted a work plan to implement a second phase of air control measures, the Phase 2 Cave Air Work Plan (Arcadis 2016a). Shortly after the plan was approved, additional tasks were identified to expand upon the Phase 2 Program. Arcadis submitted an initial draft Phase 2 Addendum Air Controls Work Plan on February 24, 2016. Implementation of Phase 2 Program (encompassing both work plans) began while the "Addendum" work plan was being revised and ultimately finalized on July 15, 2016 (Arcadis 2016b).

The combined Phase 2/Phase 2 Addendum scope of work included the following components:

- Construction of a permanent airlock to provide a physical barrier to air flow between Areas 2 and Area 3. The permanent airlock replaced the temporary structure constructed in 2015, and included more weather-resistant materials, an interlocking system with signal lights to prevent simultaneous door openings, and a data logger to record door openings. Construction of the airlock was completed on April 25, 2016.
- Upgrading air sealing and ventilation control at the main entrance to reduce adverse condensation in Area 2 that forms under humid summertime conditions when warm outside air is drawn into the cavern and cools below its dew point. This work included reconstruction of the front entrance wall, with new electronically controlled windows and a ventilation fan. Entrance wall reconstruction was complete in late March 2016.

- Construction of a vent-well system to exhaust air from the cavern through two boreholes located up-cave (west) of Area 3. This system comprises two 220-foot-deep vent wells on the hillside above the cavern, with a blower system installed at the well-heads to continuously draw air from the cavern. The vent wells are controlled remotely through a programmable logic controller (PLC) with status updates and notifications of alarm conditions **(Table 3).** Construction, which included road building, providing electrical service, and fabrication of a custom blower system, was completed from March to June 2016.
- Upgrading air sealing and ventilation control at the Amphitheater Entrance. This task was initiated as a potential supplement to the vent-well system to help control the primary air intake of make-up air drawn into the cavern. The existing doors and exterior walls were reconstructed to direct all airflow through two sets of screened exterior doors. A powered make-up air fan was also installed as a potential supplement to the vent-well system. Pilot testing showed that the booster-fan was ineffective, and the system was not put into service. Subsequent air-control performance data also showed that the vent-well system is capable of drawing sufficient make-up air into the caverns without a make-up air booster fan. The fan was not adopted as part of the air-control program and is no longer functional due to damage sustained during the May 2017 flood.
- Installation of an in-line water filtration system to remove TCE from wash water pumped from the cave-stream. Arcadis installed a granular activated carbon (GAC) water treatment system on August 24, 2016, that treats all water used in the cavern for floor washing or other purposes (e.g., refilling the basin used to supply the Theater Curtain spraying system). MCE evaluated several alternative methods of eliminating the use of cave-stream water in their operations, including installing a new water supply line connected to MCE's water well; however, the GAC filter was ultimately deemed most feasible.
- Evaluation of the entrance building heating, ventilation, and air conditioning (HVAC) system to determine if modifications were necessary to reduce TCE concentrations inside the building. C&R Mechanical Company, on behalf of MCE, evaluated the existing system and prepared a summary report (**Appendix A**). The report summarizes conditions at the time of the evaluation and presents recommendations for potential equipment upgrades. Subsequent implementation of other air controls (e.g., airlock, vent-well system, and a sub-slab depressurization system [SSDS]) achieved the required reductions in TCE concentrations without changes to the HVAC system. Based on the HVAC evaluation and subsequent air monitoring results, changes to the HVAC system are unnecessary as a TCE air control at this time. No changes to the HVAC system have been made or are expected to be needed as a component of the air-control program.
- Evaluation of a potential air barrier to limit transport of air from the Atomic Shelter Passage to the main trunk of the cavern, as a potential supplement to the vent-well system. Prior to installation of the vent-well system, the effect of the system on airflow in the Atomic Shelter Passage was uncertain. Testing completed after the vent-well system went online showed that the system induced airflow up the Atomic Shelter passage away from Area 3. These airflow direction measurements were also confirmed by air quality testing, showing TCE concentrations consistent with air drawn up from Area 3. These findings showed that no air barrier is needed; therefore, no air barrier was constructed.

- Testing and operation of portable air cleaners to reduce TCE levels within Areas 1 and 2 of the cavern. GeoTechnology, Inc., on behalf of MCE, deployed five Sentry Air Systems portable GAC air cleaners on March 22, 2016. The units were initially placed in the entrance building, Ballroom, Airlock, and Theater Room. While tests of the units suggested that they had limited effect, particularly in large open spaces such as the Ballroom, the units remained in use intermittently through May 2017. Arcadis also deployed four larger air filtration units using permanganate-enhanced filtration media, intended to be used for contingency "air polishing." The air polishing units were deployed for testing on July 30, 2016 but were never put into routine service. As discussed in Section 2.8, use of the portable air cleaners and air-polishing units has been discontinued; and is no longer a component of the air-control program.

Phase 2 Addendum Air Controls Work Plan also included a detailed plan for monitoring through the end of 2016. Those tasks, including air sampling, air flow gauging, stream water sampling, stream gauging, and cave-climate monitoring, will continue beyond 2016 as described in Section 3 of this work plan.

Concurrent with the Phase 2 Addendum Air Controls Work Plan, Arcadis submitted a Quality Assurance Project Plan (QAPP, Arcadis 2016c). The final QAPP, submitted June 17, 2016 and revised July 11, 2016, will also guide data collection and quality management for the monitoring tasks described in this work plan.

1.4 Sub-Slab Depressurization and Ventilation Systems

1.4.1 Ballroom SSDS

After sampling completed in November 2016 indicated that sub-slab vapors beneath the Ballroom floor may contribute TCE to the cavern, the existing air-controls were supplemented with a sub-slab depressurization system (Ballroom SSDS). The system comprises two extraction points that penetrate the floor slab inside the cavern near the door to the fudge counter at the cavern entrance (**Figure 2**). The extraction points are piped out of the cavern through the entrance wall to fans mounted above the entrance building roof, and discharge to outdoor air.

Ballroom SSDS operation started November 22, 2016 and has been shown to create negative pressure beneath the slab floor at the cavern entrance. In December 2017, the Ballroom SSDS was upgraded with 10-inch exhaust blowers and 10-inch PVC exhaust piping allowing for approximately twice the vacuum and twice the air flow through the Ballroom SSDS. The Ballroom SSDS operates continuously. Additional details on the system are included Section 2.5.

1.4.2 Vault Ventilation System

After sampling completed in December 2017, additional efforts were completed to extract sub-slab vapors that may be influencing the entrance building air quality. A vault ventilation system was constructed during the week of January 12, 2018 to extract vapors from the vault below the women's restroom. Additional details on the system are included Section 2.5

1.4.3 Gift Shop SSDS

During the week of January 29, 2018, an additional SSDS was installed in the entrance building, with extraction points in a closet adjacent to the gift shop (Gift Shop SSDS). The closet is located along an interior hallway leading to the restrooms in the gift shop. The Gift Shop SSDS consists of two 6-inch pipes to extract vapors from below the gift shop floor slab, venting above the entrance building roofline. Additional details on the system are included Section 2.5

1.5 Objectives

This work plan is intended to provide a guide for implementation of the air controls program, including operations, maintenance, and monitoring. The objectives of the plan are as follows:

- Describe the elements of the air control program.
- Explain normal operations and maintenance procedures for the various elements of the air control program.
- Explain how the air controls are to be implemented and adjusted under normal seasonal conditions and in specific contingency situations.
- Outline the monitoring program to be implemented to track system performance and verify that the cavern remains in compliance with air quality standards.
- Provide manufacturer's specifications and information on the equipment used in the air control measures.

2 CAVE AIR CONTROLS

The cave air controls program includes both active and passive elements. The table below summarizes each element. Locations of the air controls are shown on Figures 2 and 3. **Table 4** summarizes the responsible party for each air control's operation and maintenance.

Air Control	Description	Purpose
Vent-Well System	Blower system exhausting air through two boreholes intersecting cavern up-cave (west) of Area 3	• Prevent migration into Area 3 of air carrying TCE from areas up-cave • Maintain up-cave airflow through Area 3
Airlock	Two sets of air-sealed doors separating Areas 2 and 3 of the cavern	• When in use with vent-well system, limit infiltration of outside air into Area 2 that may cause condensation • In event of vent-well system outage, prevents air from migrating from Area 3 to front of cavern
Front Entrance Wall Windows	Adjustable windows between Area 2 and outdoors in front-entrance wall	• When closed, limit infiltration of outside air into Area 2 that may cause condensation • When open, enhance natural air circulation in Area 2
Wine Room Vents	Two existing passive ventilation wells intersecting the Wine Room in Area 2 installed decades ago by MCE	• When open, enhance air circulation in Area 2 • When closed, limit intake of cold dry air that may adversely dry out upper-level passages
Amphitheater Entrance Doors	Reconstructed screen doors in the walled enclosure of the Amphitheater Entrance	Allow air to move freely into the cavern, providing primary make-up air source for the vent-well system
Wash Water Treatment	In-line GAC filtration system to treat cave-stream water used for cleaning in cavern	Removes TCE from water used in the cavern for path washing or other purposes to prevent volatilization of TCE from the water to cave air

Air Control	Description	Purpose
Ballroom Sub-Slab Depressurization System (SSDS)	Two sub-slab extraction points inside the cavern near entrance to Entrance Building. Air from each point is piped out of the cavern by fans mounted on the entrance building roof and discharged to outside air.	• Maintain a negative pressure in the sub-slab at the cave entrance to limit migration of TCE in sub-slab vapors into the cavern • Operates continuously
Gift Shop SSDS	Two sub-slab extraction points inside the hallway closet near the gift shop inside the Entrance Building. Air from each point is piped out of the cavern by fans mounted on the entrance building roof and discharged to outside air.	• Maintain a negative pressure in the sub-slab in the center of the Entrance Building to limit migration of TCE in sub-slab vapors into the Entrance Building. • Operates continuously
Vault Ventilation System	Piping installed into the women's restroom vault to extract vapors from the vault by in-line fan, discharging to outside air above the building roof line.	• Provide ventilation to the women's restroom vault to limit vapor migration from the vault into the entrance building. • Operates continuously

2.1 Overview of Air Controls Operations

Management of TCE concentrations in cave air will require integrated use of multiple air controls. The manner of implementation will also be modified periodically throughout the year, adjusting to account for the natural patterns of temperature-dependent airflow in the cavern. The table below provides an overview of the seasonal air control plan.

Air Control	Winter	Transitional	Summer
Outdoor High Air Temperatures	Below 60 degrees Fahrenheit (° F)	60° to 75° F	Above 75° F
Natural Temperature Dependent Airflow	Cavern is warmer than outdoors; air enters at low-elevations, such as amphitheater and main cave entrance, and flows up through cavern	Reduced temperature differential results in reduced air circulation and longer air residence times in cavern	Cavern is colder than outdoors; air enters at high-elevation openings and flows down through cavern toward amphitheater and main cave entrance
Typical Months	November to March	April and October	May through September

Air Control	Winter	Transitional	Summer
Vent-Well System	Continuous operation with blower rate automatically adjusted based on real-time outside temperature measurements to maintain up-cave airflow within the cavern. Target airflow rates will be adjusted periodically based on observed changes in TCE loading rates.		
Sub-Slab and Vault Ventilation Systems	Continuous operation, year-round.		
Airlock	Closed year-round.		
Entrance Wall Windows	Open to extent feasible but may be incrementally closed as temperatures cool to maintain comfortable temperatures in Area 2 of the cavern.	Open	Closed
Wine Room Vent Wells	Open to extent feasible, but to may be closed in winter to maintain comfortable temperatures in the cavern at the discretion of MCE.		
Amphitheater Doors	Screens open and unobstructed		
GAC Water Treatment	Operated on-demand year-round		

Note that variations to this plan may be required in contingency situations, including power outages or floods. Section 5 and **Table 2** present contingency operating plans.

Seasonal changes to air-control operation will be tracked by TRW and reported as described in Section 6. MCE will also record any air-control changes made by them, as a part of day-to-day operations (e.g., adjusting window, covering or uncovering the Wine Room vents), using the form provided in **Appendix B-3.**

2.2 Vent-Well System

The vent-well system is designed to intercept up-cave air before it reaches the developed portion of the cavern while simultaneously drawing outside air into the cavern through the Amphitheater to flush the toured portion of Area 3. The overall goal of the vent-well system is to maintain year-round up-cave

airflow from the front of the cavern to the vent wells at sufficient rates to prevent TCE concentrations from building up in developed areas of the cavern.

2.2.1 Design and Construction

Installation of the vent-well system involved drilling two borings to intercept the cavern from the land surface on a wooded hilltop above the cavern, then installing a blower system to extract cave air from the borings. Installation, construction, and preliminary operation of the system were completed in accordance with the Phase 2 Addendum Air Controls Work Plan (Arcadis 2016b) and a Basis of Design Technical Memorandum, submitted and approved by USEPA. Vent-well system operation and maintenance information is included in **Appendix B-1**, and **Appendix C** includes maintenance and repair contacts and log. The Basis of Design is included in **Appendix D**.

Site preparation began March 2016 with several tasks:

- Detailed survey both inside the cavern and at the drill site to precisely locate drilling locations above the targeted segment of the cavern
- A geophysical survey to investigate potential sinkholes or cavernous zones that may create a work zone hazard or interfere with drilling
- Road improvements and construction of a new access road extending from the existing road to the drilling site
- Construction of a drilling pad to provide adequate working area for drilling operations
- Installation of a buried power feed extending approximately 2,000 feet from the cavern parking area.
- Both vent wells were drilled using a combination of air-rotary and air-hammer drilling methods, and proceeded as follows:
- Drilled 7 7/8-inch-diameter pilot borehole to approximately 196 feet below the ground surface (bgs), stopping approximately 15 feet above the expected cave roof
- Completed a borehole deviation survey to verify that borehole was plumb
- Reamed pilot borehole to 17-inch-diameter and installed a 12 5/8-inch-inner-diameter steel casing
- Drilled out final 15 feet of rock to below casing with 12 3/8 bit to intersect cave roof
- Surveyed well with down-hole camera to confirm that the borehole had intersected the cave roof cleanly, without ceiling collapse or any obstructions.

The specifications of each well are summarized in the table below. Well construction logs are included in **Appendix E**.

	VW-1	VW-2
Installation Dates	April 13 to May 2, 2016	May 3 to May 13, 2016
Casing depth	196 feet bgs	197 feet bgs
Depth to Cavern Roof	213 feet bgs	211.5 feet bgs
Depth to Cavern Floor	227 feet bgs	228 feet bgs

As described in the Basis of Design (**Appendix D**), uncertainty of airflow required to vent the cavern resulted in a system design including two blowers, one 60-horsepower (hp) blower capable of extracting 7,500 CFM from a single vent-well and one 15 hp blower capable of extracting up to 7,300 CFM from both wells. In addition, both blowers can run at the same time, extracting air from each vent well separately, resulting in extracting up to 11,500 CFM when operating both blowers simultaneously.

2.2.2 General System Description

The vent-well system consists of two 12-inch-diameter steel-cased vent wells, inlet manifold and piping, and extraction blower and discharge ductwork. Air is withdrawn from the cavern via the vent wells, ducted to the operating blower through the manifold, and discharged to the atmosphere. Access to the vent-well system is via a rock road with an entrance gate at the base of the road (in the MCE maintenance yard) and a fence that encloses the blower building, the vent wells, and vent-well piping. **Appendix B-1** described operation and maintenance recommended for the vent-well system.

2.2.2.1 Vent Wells

The vent wells are approximately 220 ft deep. The upper 200 ft of the vent wells are 12-inch-diameter steel casing. From the bottom of casing to the top of cavern roof (approximately the bottom 20 feet) each vent is open hole within the native limestone. The 12-inch casing extends approximately 1 foot above ground surface to allow for piping connections and prevent runoff from entering the vent well and cavern should the wells be inoperative at any time. No maintenance activities are anticipated for the vent wells themselves, although routine observations during site visits will be noted and recorded by TRW. In the unlikely event that maintenance activities are required, TRW will coordinate with the appropriate subcontractor. Photographic documentation of the aboveground connections to the vent wells will be conducted yearly and documented in the first progress report of each calendar year.

2.2.2.2 Inlet Manifold and Piping

Piping between the vent wells and building consists of a combination of 18-inch polyvinyl chloride (PVC) pipe and fittings (one elbow at each vent well) and Fernco type couplers where PVC is mated to: 1) the

vent wells and 2) the inlet manifold. The inlet manifold is manufactured of galvanized steel and acts to direct flow to whichever of the vent blowers is in operation. Sample ports are located in the piping to each of the vent wells to allow manual measurement of flow rate using a handheld anemometer.

Flow within the manifold is directed by use of slide gates; one on each blower and one on the manifold to separate flow from the two wells. The manifold was constructed to allow for a range of operating conditions including operating each blower on an individual well or either blower on both wells simultaneously. Inlet piping is insulated to reduce condensation and protect piping from UV light.

No maintenance activities are anticipated for the inlet piping and manifold, although routine observations as to condition will be made during site visits. Photographic documentation of piping and manifold conditions should be made yearly and documented in the first progress report of each calendar year.

.

2.2.2.3 Blower Package

Two blowers were specified, primarily to provide for redundancy, allowing for continued operation should the primary blower require repairs. The second blower, designed to allow for extracting the design flow (7,500 CFM) from a single shaft, will serve as the backup blower. The 15 hp blower, designed to extract the design flow from a combination of the two shafts, will serve as the primary blower.

While flow is not directly monitored, vacuum readings are continually monitored on each of the blowers to: 1) provide an indicator that the blower is operating and 2) confirm that operating conditions have not changed (e.g., performance deterioration, blockage of inlet piping, blockage of discharge piping).

Slide gates connect each of the blowers to the manifold. The slide gates are opened manually when the blower is placed in operation and closed manually when taken out of operation. When additional flow is desired, the slide gate can be closed, allowing each blower to operate on one vent well each, resulting in approximately 11,600 CFM extracted from the vent wells.

Each of the blowers discharges through dedicated ductwork. The ductwork discharges above the roof line of the enclosure and is screened to prevent entrance by animals or debris. Discharge ductwork is insulated to reduce water condensation along the piping. Photographic documentation of blower condition should be made yearly and documented in the first progress report of each calendar year.

2.2.2.4 Vent Well Blower Building

The blowers are mounted inside of a small building. The building is constructed on a steel skid with hardboard siding, trim, and a corrugated steel roof. Routine maintenance, including periodic painting, will be conducted as needed. Photographic documentation of building condition should be made yearly and documented in the first progress report of each calendar year.

2.2.2.5 Electrical Service and Blower Controls

The vent-well system has dedicated electrical service that is buried underground between the cavern parking lot area and the building to minimize long-term service interruptions common with aboveground service lines. Electrical service lines were installed by boring up the side of the hill from the cavern

parking lot to the top of the hill, which was completed on April 25, 2016. Final electrical service connections to the vent-well system were made on June 16, 2016 after the line was buried in trenches from the site of tunneling to the vent-well system location and required junction boxes along with the meter for the site were installed. Power is provided to the building via buried conduit to the service entrance on the east side of the building.

The motor control center and control panel for operation of the blowers are located inside the building. A schematic of the system logic is presented in **Appendix B-1**. The system is designed to run continuously without an operator, although periodic inspections will be conducted. Critical conditions will be sensed with instruments and controls, and when alarms occur, contact will be made with both TRW and MCE staff via an e-mail message. Routine operating status reports are also automatically prepared and sent to the TRW team.

In addition to the permanent electrical service, the vent-well system also includes a 50-kilowatt (kW) standby generator sized to operate the 15 hp blower. The generator is configured to operate under the following conditions:

- Standby under normal utility power
- Manually switch to generator power
- Automatic transfer to exercise without load (generator is typically exercised for 30 minutes each week for routine maintenance)
- Automatic transfer to generator power during utility power outage
- Automatic transfer from generator power to utility power upon restoration of utility power.

Additional operation data, including fuel levels, will be communicated to the programmable logic controller (PLC) and will be accessible for remote monitoring. The backup generator installation and startup were completed in February 2017. TRW will maintain the generator including regularly scheduled fueling and maintenance while the vent wells are required to be operational or until a date agreeable to the stakeholders.

2.2.2.6 Blower Controls

Operation of each of the blowers is controlled by the PLC using a variable frequency drive (VFD) that allows control of the blower speed, and thus controls the flow rate. Blowers are operated through hand-off-auto (HOA) controls, accessible on the PLC touch pad or through remote login. When operating in hand, the speed of the blower can be controlled via the VFD, but routine critical conditions do not function. Routine operation of the blower will be in the auto condition. When the blower is operated in the auto condition, the PLC setting controls blower speeds based on outside temperatures. A PLC override can be used to maintain blower speeds independent of temperature if required. If the PLC loses communication with the temperature sensor, the blower will automatically operate at the override speed, currently set at 100% of maximum blower speed (i.e. 7,300 CFM when operating with one blower).

2.2.2.7 Remote Monitoring

Remote monitoring is achieved through a cellular modem connected to the PLC that transmits system parameters. Access to the system can be gained through a password-protected internet site, maintained by TRW.

2.2.2.8 Alarm Conditions

The alarms generated by the PLC monitoring fall into two categories:

- Hard (cascading) alarm – the system will shut down and remain shut down until restarted by remote or on-site personnel.
- Soft (notification) alarms – the system will continue to operate; the alarm provides notification of changed conditions.

The alarm conditions are summarized in **Table 3**.

2.2.2.9 Access Road

The access road is a crushed-rock gravel road connecting the maintenance yard at the base of the hill to the blower system and vent wells located above the cavern on top of the hill. Periodic general maintenance, including additional rock and repairs of washouts after heavy storms and/or removal of downed trees, will be required to maintain access. In addition to routine access using a light pickup or SUV, periodic access for fuel or repair trucks will be required. Road conditions will be maintained by TRW to allow access by these larger vehicles. TRW will monitor and document road conditions during scheduled monitoring events.

2.2.3 Operational Procedures

This section presents the procedures for the operation of the vent-well system. Procedures are included for the following:

- Blower Rate Settings
- Startup and Operation
- Notification and Troubleshooting

2.2.3.1 Blower Rate Settings

The vent-well system is operated to achieve a TCE concentration in a personal air monitoring (PAM) sample less than the target concentration of 6 µg /m^3 as described in Section 3.3. Normal operation of the vent-well system requires adjustments to the blower rates based on two variables:

- Concentration of TCE in the cave stream, which directly influences TCE concentrations in the cave air
- Outside air temperature, which controls the natural patterns of air flow through the cave.

Because temperature and stream concentration are not static parameters, routine operation of the system includes periodic adjustments which are considered normal operating conditions. Blower rate setting adjustments are based on the following process:

1. Air and water samples are collected routinely, as described in Section 3.
2. If results are trending from the current conditions, data will be used to select an adjusted target up-cave airflow rate (as described in Section 2.2.3.1.1, below)
3. Blower programming is then remotely adjusted to make automatic temperature-dependent rate-changes to maintain the new target up-cave airflow rate across a range of outside air temperatures (as described in Section 2.2.3.1.2, below)

2.2.3.1.1 Adjusting Blower Rate Settings Based on Stream Concentration

Under conditions of continuous up-cave airflow, the primary factors influencing the TCE concentration in cave air in Area 3 are the concentration of TCE in the cave stream and the rate of air moving through the cave. Sampling data have shown that loading rate of TCE (i.e., the rate at which TCE mass transfers from the cave stream water to cave air) is generally proportional to the cave stream TCE concentration. Thus, for a constant air-flow rate, higher cave stream TCE concentrations will result in higher cave-air TCE concentrations in Area 3. Cave air concentrations can be managed, however, by making rate adjustments to the vent-well system to increase or decrease the amount of outside air drawn into the cavern.

Selection of a target up-cave airflow rate is made in a three-step process:

1. A target average TCE air concentration for Area 3 is estimated based on a time-weighted average (TWA) calculation. The estimate is based on the amount of time a tour guide spends in each portion of the cavern, and recent TCE air concentrations in Areas 1 and 2. Because guides commonly spend 80% of a shift in Areas 1 and 2, relatively minor changes in TCE concentrations in those areas can impact acceptable TCE concentrations in Area 3 necessary to achieve a time-weighted PAM concentration of less than 6 $\mu g/m^3$.

2. A target up-cave airflow rate is calculated as the rate required to maintain the target Area 3 TCE air concentration, based on the current TCE loading rate. The loading rate may be estimated based on the current Area 3 concentrations and measured up-cave airflow rate or from cave-stream concentrations. Empirical results collected to date have shown a linear relationship between loading rates estimated from air data and the cave stream TCE concentrations. This allows cave-stream water samples to be used as the basis for making routine operating changes in future years of system monitoring, with less frequent air sampling (as described in Section 3.1).

3. Historical data, concentration trends and other factors are considered before setting a final target. This includes forecasting TCE concentrations in the cave stream based on observed historical trends associated with seasonal and climatic conditions (e.g., drought and flood). Due to the complexity of the cave system, no calculation can be used as the sole basis for operations. As the air-control systems continue to be operated, the empirical performance data (e.g., the history of what settings worked under what conditions) will be used to assist in selecting rate targets. Adjustments must also take into consideration the potential for causing secondary effects by inducing an excessive volume of air through the cave (e.g., as described in Appendix F). To

balance these concerns, airflow rates should be set as high as needed to achieve acceptable PAM results, but not significantly higher.

TRW will continue to evaluate data for trends and patterns that clarify the timing and drivers for TCE concentration changes in the cave stream and cave air. If findings from these data (e.g., stream flow, stage, specific conductance) are found to support improved system operations, procedures may be updated to consider those parameters. As discussed in Section 2.2.3.1.2, below, the maximum achievable up-cave air-flow rate is temperature dependent. Under extreme conditions (e.g., high outside air temperature combined with a high cave-stream concentration), target airflow rate may exceed the system capability. As discussed in Section 3.2 (Contingency Monitoring) cave stream loading conditions that approach the vent-well system capacity may trigger additional monitoring.

2.2.3.1.2 Adjustments to Blower Rate Settings Based on Outside Air Temperature

To maintain a steady up-cave airflow rate, the vent-well blower rate must be adjusted as outside temperatures change. The system controls include programming to adjust the blower VFD based on temperature measurements recorded at five-minute increments by a sensor mounted on the system building. The programming adjusts the blower rate incrementally based on a temperature look-up table, in which a blower rate is assigned to each temperature range.

Temperature-dependent blower rate settings are reprogramed each time a new target up-cave airflow rate is selected (as described in Section 2.2.3.1.1). Settings for a given up-cave airflow rate have been developed empirically, based on observed system performance to date, including blower rate, outside temperature, and up-cave airflow rate, as measured at the Jungle Room anemometer station.

Depending on the outside temperature and target up-cave airflow rate, the vent-well system may be operated with either one or two blowers. The table below summarizes the maximum up-cave airflow rate for one and two blowers operating at different temperatures. If the expected air-flow demands exceed the single-blower's maximum capacity across the expected temperature range, the system will be programmed to run with both blowers.

Outside Air Temperature (°F)	Maximum Up-cave Airflow (CFM)	
	15 hp and 60 hp blowers	Only 15 hp blower
90	6400	3000
80	6800	4000
70	7200	4500
60	7500	5200
50	7800	6000
40	9000	6600
30	10000	7200
20	11000	8000

Note that the above airflow rates are based on correlation of outside temperature and up-cave airflow rates as measured at the Jungle Room anemometer station. The actual maximum discharge rate of the blower (e.g., at the system stacks) is generally constant across a range of temperatures. At maximum speed, the 15 hp blower rate produces approximately 7,300 CFM system discharge. The combined blowers produce a maximum discharge rate of 11,600 CFM.

2.2.3.2 Start-up and Operation

Procedures for normal startup are described in detail in **Appendix B-1**. The vent well system is programmed to operate continuously with automatic restart attempts after power interruptions. In addition, remote access to the system allows for remote startup and blower speed modifications as needed. The manual system startup procedures described below will be required only after the system was stopped for maintenance or alarm conditions. System startup and operation are summarized below:

- Verify that it is safe to restart the vent-well system and that no maintenance is currently occurring on the vent well system.
- Check that the main disconnect is on.
- If the Emergency stop (E-stop) button on the panel is pulled out, then push it in to confirm that the system is on and pull out in preparation to operate the system.
- Conduct a check of each slide gate.
  - When operating the 15 hp blower alone, the slide gate positions are as follows:
    - Slide Gate 1 on inlet manifold – normally open – conditions requiring closing Slide Gate 1 are unlikely to be encountered unless additional ventilation is required.
    - Slide Gate 2 on 15 hp blower – normally open.
    - Slide Gate 3 on 60 hp blower – normally closed.
  - When operating both blowers simultaneously, the slide gate positions are as follows:
    - Slide Gate 1 on inlet manifold—closed—condition allows each blower to extract from separate vent wells
    - Slide Gate 2 on 15 hp blower – open.
    - Slide Gate 3 on 60 hp blower – open.
- Push the "Alarm Acknowledge" button on the Operator Interface (touch screen) to reset all alarms.
- Check blowers to ensure that all housings are installed, connections are tight, and that there are no obstructions over any moving parts (shaft connecting motor to blower).
- Visually inspect the temperature sensor for any obstructions or damage.
- Using the PROCESS MODULE screen of the touch panel, place the selected blower in AUTO
- Review the lookup table of speeds at each temperature range.

- Manually measure flow rate from each vent well using a handheld anemometer in ports within the inlet piping to verify that the system is operating as specified given the outside temperature.

2.2.3.3 Notification and Troubleshooting

Alarm notification are sent via e-mail to the TRW team. MCE is also notified by an automatically generated e-mail when the vent-well system has stopped operating. The contingency plan for loss of the vent-well system due to an alarm condition is outlined in Section 5.

2.3 Building Modifications

The entrance building was modified to seal the entrance building wall connection to the cavern to reduce condensation due to outside air moving through the openings. In addition, the Amphitheater Room of the cavern was enclosed with two door openings to allow for additional air to be pushed into the cavern from the amphitheater if the vent wells were not able to achieve necessary venting on their own.

2.3.1 Front Entrance Building

The front entrance of the cavern includes a building for the Gift Shop and Restaurant connected to the natural opening of the cavern. In April 2016, the corrugated steel, fiberglass, and foam used to connect the building to the rock wall of the cavern opening was replaced with hardboard siding and commercial-grade urethane sealant. Additionally, the top row of four windows was removed, and the remaining windows were replaced with thermally insulated double-pane windows. The new windows include remotes for opening and closing each individual window. Operation of the windows as an air-control is described in Section 2.6.

2.3.2 Amphitheater Wall

During operation of the vent-well system, air is pulled into the cavern through the Amphitheater Entrance. During the design of the system, the entrance wall was reconstructed to allow better control of airflow though the cave entrance. The existing sheet-metal walls were reconstructed with hardboard siding and sealed along the rock edge to allow airflow only through the doorways. Doorways were replaced with wide-mesh screens to allow efficient airflow. A powered entrance fan was also installed as a potential supplemental booster for make-up air but was found to be ineffective and was damaged due to flooding. It has been removed from the system (see Section 2.8).

2.3.2.1 Operation and Maintenance

MCE will maintain the Amphitheater Entrance doors. The Amphitheater Entrance doors are the primary make-up air inlet for the vent-well system. As such, the following must be maintained:

- The doors will be kept unobstructed so that air may move freely into the cavern.
- Screens in the doors will be kept clean and free of debris that may restrict airflow.

2.4 Cave Stream GAC Water Treatment

Under the Phase 2 Addendum Air Controls Work Plan, a cave-stream water treatment system was installed on August 24, 2016 to remove TCE from the water before it reaches the distribution system (handrails) for use throughout the cavern. The water treatment system consists of a bag filter to remove any sediment from the stream water and two GAC tanks to allow for adsorption of the TCE from the water. **Appendix B-2** includes guidance for operation and maintenance of the system including bag filter change-out procedures, carbon replacement guidance, and troubleshooting if a pressure drop occurs. TRW will oversee operation and maintenance of the GAC water treatment system, including aspects such as filter changes and repairs. MCE has been provided with supplies and training for bag filter changes if needed during flooding response or other emergency situations when TRW staff are not immediately available.

2.5 Sub Slab Depressurization Systems and Vault Ventilation

Three independent systems have been installed to cut-off potential infiltration of vapors through the Ballroom and entrance building floors (Figure 4):

- Ballroom SSDS - installed at the cavern entrance to reduce vapor migration into the cavern.
- Giftshop SSDS – installed within the entrance building to reduce vapor migration directly through the entrance building floor slab
- Vault Ventilation System – installed to ventilate vapors from a vault below the women's restroom in the entrance building where a branch of the cave stream flows

The need for the first system, the Ballroom SSDS, was identified in November 2016 after air flow from the sub slab was identified by the cavern staff and sampling personnel during routine sampling activities. Air flow rates into the cavern from beneath the cave floor appear to reflect relative temperature differences between the cave and outside, with flows into the cave increasing with decreasing outside temperatures. Vapor sampling indicated that air entering from the sub slab was a primary driver of increasing TCE concentrations in the Ballroom that coincided with decreasing outside temperatures.

As an initial step to reduce vapor infiltration, MCE sealed a number of void spaces identified between the floor and cave walls and within the floor itself (including two floor drains that discharge to the sediments underlying the cavern floor). A sub slab depressurization system was then installed near the front entrance of the cavern, immediately adjacent to the Fudge Shop door. Air extracted from the sub-slab is piped through the front entrance wall and discharged to outdoor air.

The goal of the SSDS is to limit the migration of sub slab air into the cavern by achieving a negative pressure below the slab. Operation of the SSDS has demonstrated that under normal operation, a slight negative pressure can be maintained by the SSDS near the extraction points and the gradient minimized at other locations near the cave entrance. Sub-slab differential pressure monitoring points were installed to monitor effects of the SSDS. Differential pressure monitoring point locations are shown on **Figure 4**. Ballroom TCE vapor concentrations dropped immediately upon implementation of the SSDS, demonstrating its effectiveness.

The second and third ventilation systems were installed in early 2018, following a period of elevated TCE concentrations detected in the front entrance building. The vault ventilation system consists of flexible

pipe running through an exterior opening in the entrance building wall to the vault room below the women's restroom, where elevated TCE concentrations have been detected. The Gift Shop SSDS was installed in a closet adjacent to previously installed vapor monitoring point, VP-5. The closet is located along an interior hallway leading to the restrooms in the giftshop. After both the vault ventilation and gift shop SSDS systems were installed, TCE concentrations at the giftshop air sampling location decreased.

2.5.1 General System Description

The two SSDS and vault ventilation system include three main components: extraction piping from below the floor level, 10-inch in-line blower, and discharge piping from the blower outlet to above the entrance building roof line. Dampers were installed at the end of each discharge pipe, preventing backflow if blowers are not in use. Documentation for the SSDS and vault ventilation blowers is included in Appendix A. Vacuum monitoring points were installed within the Ballroom and entrance building to document differential pressure across the floor slab and locations are shown on Figure 4.

2.5.2 Ballroom SSDS

The Ballroom SSDS consists of the following:

- Two 6-inch extraction points completed into a void identified below the floor slab
- 6-inch PVC piping from each extraction point routing air flow from the sub slab out of the cavern through the front entrance wall and discharging to outdoor air
- Independent inline duct fans in each of the vent pipes rated to remove approximately 450 CFM per extraction point
- Two 10-inch discharge pipes from the blower outlet to above the entrance building roof line
- Dampers at the piping discharge to prevent backflow when not in operation

2.5.3 Gift Shop SSDS

The gift shop SSDS consists of the following:

- Two 6-inch extraction points completed into a void identified below the floor slab
- 6-inch PVC piping from each extraction point routing air flow from the sub slab out of the cavern through the back entrance building wall and discharging to outdoor air
- Independent inline duct fans in each of the vent pipes rated to remove approximately 450 CFM per extraction point
- Two 10-inch discharge pipes, one from each blower outlet to above the entrance building roof line
- Dampers at the piping discharge to prevent backflow when not in operation

2.5.4 Vault Ventilation System

The vault ventilation system consists of the following:

- One 6-inch diameter flexible hose extending 10 feet into the vault present below the women's restroom inside the entrance building
- 10-inch Schedule 40 PVC piping is connected to the 6-inch flexible hose with 6-inch elbows and a flexible reducer. The 10-inch PVC piping extends along the outside wall of the entrance building directly above the vault. Air flows from the vault discharging to outdoor air approximately 3 feet above the building roofline
- Independent inline duct fan in the vent pipe rated to remove approximately 450 CFM
- Dampers at the piping discharge to prevent backflow when not in operation

2.5.5 Operation and Maintenance

Operation of the SSDS and vault ventilation systems is anticipated to be continuous. While 2016 operating data indicate that operation during summer months will not be required, it is recommended that the blower remain in operation as long as VOCs are present below the cavern floor. Blowers will operate at their maximum speed at all times.

SSDS monitoring will consist of the following:

- TRW will collect differential pressure readings from vacuum monitoring points during routinely scheduled monitoring events using an electronic manometer.
- MCE will be able to confirm operation of the SSDS fans by monitoring vacuum via the mounted vacuum gauges connected to the extraction pipes.
- While confirmation samples of extracted vapors may be collected periodically to evaluate site conditions, scheduled samples are not required.
- SSDS fans are wired to independent breakers and can be turned off for repair with lockout/tagout at each blower's breaker.

Equipment details are included in **Appendix A**, along with contacts for repair and/or replacement of individual components in **Appendix C**.

2.6 Main Entrance Ventilation

Within Area 2, air circulation is largely dependent on normal convective air flow driven by the temperature differences between the cavern and outdoors. During transitional periods in the spring and fall, reduced temperature differentials result in reduced air circulation and longer air residence times forward of the airlock. The front entrance wall construction includes exterior windows that can be open and shut to aid passive ventilation.

2.6.1 General System Description

The reconstructed entrance wall includes a row of eight top-hung casement windows, with electronic controls operated from inside the cavern entrance. Note that a ventilation fan was also installed in the entrance wall, but its operation has been removed from the air control program (see Section 2.8.3).

2.6.2 Operation and Maintenance

Ventilation in Area 2 will be controlled by seasonal adjustments to the entrance wall windows.

Windows should be left open except as needed for maintaining acceptable climate conditions in Area 2 of the cavern. MCE will operate and maintain the entrance wall windows. Normal operating conditions will be as follows:

- Under summer conditions, when outside air high temperatures are above about 75° F, windows should remain closed to prevent adverse condensation forming in the cavern entrance.
- Under transitional conditions (e.g., daily high temperatures 60° to 75° F), windows should be kept open as much as possible to promote ventilation. Windows should be closed only if condensation is observed forming, and then reopened when the weather permits.
- Under winter conditions, windows should be kept open to the degree feasible, but may be incrementally closed as temperatures cool to maintain comfortable temperatures in the cavern entrance. Windows should not be closed completely except for sustained periods of extreme cold.

Equipment details are included in **Appendix B-2**, along with contacts for repair and/or replacement of individual components in **Appendix C**.

2.7 Airlock

As part of the Phase 2 Air Control Program, permanent airlocks were installed in the Dip area of the cavern, providing a physical barrier to air flow between the front areas of the cavern (Areas 1 and 2) and the deeper portions of the cavern (Area 3). The airlock was installed by Missouri Hometown Builders, LLC in March and April 2016, and was constructed from painted aluminum doors and frames with double-pane windows. **Appendix A** includes the manufacturer maintenance manual for the doors. Under the Phase 2 Addendum Air Controls Work Plan, a magnetic interlock system was added to prevent both sides of the airlock from being inadvertently opened at the same time.

When the vent well system is operating, the airlock doors may be opened for limited periods to increase airflow from Area 2 into Area 3. This may be done as a contingency measure for high-concentrations detected in Area 1 or 2 (e.g., Section 3.2.1), or as needed by MCE for non-routine activities, such as washing down the walkways near the airlock doors or during a flood response.

MCE will inspect the airlock doors and electronic systems monthly and apply necessary repairs. Airlock door operations and maintenance information, including contacts for replacement parts or contractor assistance, are included in **Appendices B** and **C**.

Operation of the airlock-door dataloggers was discontinued after the equipment was damaged during the May 2017 food. This system was incorporated into the design as a supplemental check on the magnetic interlocking system but does not affect actual operation of the airlock. The interlocking system has proven effective and is sufficient to prevent simultaneous openings. Moreover, the primary concern for airlock openings is during periods when the vent-well system is down, which are extremely rare. When such outages occur, tours of Area 3 are canceled (as described in Section 5), and so no routine airlock openings occur. Logging the airlock openings provides no material benefit to air-control operation.

2.8 Discontinued Air Controls

Several air-control measures were used for some portion of 2016 or 2017, but were found to be either ineffective or unnecessary, and therefore are not being carried forward as part of the air-control program. These discontinued air control elements are described briefly below.

2.8.1 Portable GAC Air Cleaners

The portable GAC air cleaners were manufactured units that incorporate a fan and filtration media. The air cleaners were delivered for Geotechnology to the cavern on March 21, 2016. The units had castors and ran off of 115v power, making them portable for use where needed.

The air cleaners were operated through 2016 in Areas 1 and 2 of the cavern. In 2017, the units were deployed briefly in the Gift Shop and Cafeteria. All use of the units was discontinued after May 2017, when several of the units were damaged by flooding. The units are no longer at the cavern, and are not considered viable options for future use, due to the observed greater efficacy of other air control measures.

2.8.2 Permanganate Air Polishing Units

The permanganate air polishing units were fabricated air treatment units that include a filter unit provided by Hydrosil and an air handling unit. They were delivered for use in the cavern on July 13, 2016. Each of four units used a 115v power source and is mounted on castors to allow transport and use through the cavern. The fan was designed for a flow of approximately 2,000 CFM. The filter medium was a permanganate-impregnated zeolite that oxidizes VOCs on contact, resulting in complete destruction.

The air polishing units were never put into routine service, due to the efficacy of other air control measures. The units were damaged in the May 2017 flood and are no longer at the cavern.

2.8.3 Amphitheater Entrance Fan

A powered make-up air fan was installed as a potential supplement to the vent-well system. Pilot testing showed that the booster-fan was ineffective, and the system was not put into service. The fan also sustained damage during the May 2017 flood and is no longer functional. The fan at the Amphitheater entrance fan has been removed from consideration as a contingency air-control.

2.8.4 Main Entrance Wall Fan

As part of the main entrance wall modification, a fan was installed to supplement ventilation into (or out of) the Ballroom. The fan is mounted on the entrance building roof, with a louvered inlet built into the cave entrance wall, adjacent to the windows. The fan is rated for 3,000 CFM airflow. It was constructed with flow control dampers that can be manually adjusted from the entrance building roof. The normal fan configuration is to discharge outside. The fan direction can be reversed, by an electrician.

The main entrance wall fan was operated on a trial basis during several periods of 2016. Operation of the fan proved to be ineffective as a TCE air control, and under some weather conditions promoted condensation inside the Ballroom. The entrance wall fan remains operable but is not considered as a

component of the air-control system. Routine operation of the fan is not recommended; however, MCE may choose to use the fan in the future at their discretion, for instance to help ventilate the cavern after flooding.

3 POST-REMOVAL MONITORING PROGRAM

Monitoring and sampling will verify the continued effectiveness of air controls to maintain concentrations of TCE below 6.0 µg/m^3 averaged over an 8.5-hour workday period and provide data needed for any operational changes that may be required. The monitoring plan currently includes:

- Compliance air samples, collected as personal air monitoring (PAM) samples
- Stationary air samples, collected at fixed locations throughout the cavern
- Cave-stream water sampling
- Cave-stream flow gauging
- Climate monitoring with a fixed-base anemometer station with temperature and relative humidity probes
- Manual air flow measurement

Note that additional monitoring will also be completed specifically to evaluate potential secondary effects possibly associated with the air controls (**Appendix F**).

3.1 Monitoring Frequency

Approximately 60 distinct monitoring events have been performed to evaluate air-control performance from the start-up of the vent-well system in May 2016 to the issue-date of this work plan. The data generated through that period have been integral to understanding the natural processes of the cavern, the most effective approach to operating of the air controls, and the most appropriate scope and frequency for continued monitoring needed to effectively operate the air-controls. The monitoring has demonstrated several key points:

- The existing air-controls are capable of maintaining compliance air samples (i.e., PAM results) below 6.0 µg/m^3 for the range of conditions encountered
- Effective operation of the air-controls requires periodic adjustments based on changing conditions within the cavern
- The most critical parameters governing operation of the air-controls are the cave-stream TCE concentration and outside air temperature

The monitoring program developed for 2018 and beyond is summarized in the table below. The components include compliance monitoring (i.e., PAM sampling) and a number of tasks where the data are intended to track system performance and support routine system adjustments. The frequency shown is the minimum anticipated. More frequent contingency monitoring would be triggered under certain specific circumstances described in Section 3.2, below.

Anticipated Minimum Monitoring Frequency

Monitoring Task	Purpose	2018	2019	2020 and beyond
PAM sampling	Compliance	Monthly	Quarterly	Quarterly
Stationary air sampling	Air-Control Performance	Monthly	Quarterly	Quarterly
Cave stream sampling	Air-Control Performance	Monthly	Monthly	Quarterly
Cave stream flow gauging	Air-Control Performance	Quarterly	Quarterly	Quarterly
Climate monitoring	Air-Control Performance	Continuous	Continuous	Continuous
Manual air flow measurement	Calibration Check of Anemometer	Quarterly	Quarterly	Quarterly

Note the following:

- The 2018 monitoring plan is consistent with current practice, as of the issue-date of this work plan.
- In 2019, the air-sampling frequency will be reduced, while maintaining monthly cave-stream sampling as the basis for making routine air-control adjustments. During this period, detected cave-stream TCE concentrations above a temperature-dependent action level (as described in 3.2.2) will trigger temporary resumption of monthly air monitoring.
- In 2020 and beyond, both air and water sampling will be conducted quarterly. Cave-stream TCE concentrations above the temperature-dependent action level will trigger temporary resumption of monthly cave-stream and air monitoring.

As monitoring continues, TRW will evaluate data for trends and patterns that clarify the timing and drivers for TCE concentration changes in the cave stream and cave air. New understandings will be incorporated into air-control operating logic, with the goal of reliably anticipating concentration changes with less frequent sampling. In particular, the planned shift to quarterly air and water sampling after 2019 will require demonstration that a system of reliable tracking metrics is in place. Prior to that change, TRW will prepare a letter work plan detailing how data will be evaluated and illustrating how the data collected to that point support a reduced sample frequency.

Each step-down in monitoring frequency will be contingent on sample results and agreement of the USEPA that the air quality conditions can be maintained. The change to quarterly air and water sampling in 2020 will be contingent upon whether data collected to that point show that cave stream concentrations

are sufficiently steady and/or predictable to support routine air-control adjustments based on quarterly data.

3.2 Contingency Monitoring

Increased air-monitoring frequency will occur under the following conditions:

- A PAM sample result exceeds 6.0 µg/m^3 averaged over an 8.5-hour workday period
- Cave-stream TCE concentrations exceed a temperature-dependent action level
- Other unforeseen conditions arise that elevate uncertainty about air quality in the caverns

Details of additional sampling under each condition are described below.

3.2.1 Contingency Monitoring for PAM Exceedance

The normal monitoring program may be supplemented with additional sampling or temporarily increased sampling frequency if a PAM sample result exceeds 6.0 µg/m^3 averaged over an 8.5-hour workday period.

If a PAM result exceeds 6.0 µg/m^3 TCE, the following will occur:

1. The reason for the exceedance will be evaluated, and the air controls will be adjusted if appropriate.

2. Resampling will occur as soon as practical and as discussed with USEPA. Resampling will include a PAM sample and sufficient stationary samples to evaluate the expected cause of the PAM exceedance.

3. If subsequent sample results are below the level of concern, sampling will continue weekly for a total of 4 weeks, or until data (including system performance and airflow monitoring) show that the condition causing the exceedance has been addressed.

If PAM results exceed 6.0 µg/m^3 for 3 consecutive sampling events, TRW will initiate a teleconference with all stakeholders to discuss the most appropriate response. Potential responses include adjusting tour duration or the allowable number of tours or closing part or all of the cavern to public tours. This criterion is consistent with the USEPA contingency requirements outlined in the USEPA draft Re-Closure Criteria letter dated June 8, 2016.

3.2.2 Contingency Monitoring for High Loading Rate Condition

When cave-stream TCE concentrations rise, the vent-well system airflow rate can be increased to offset the higher loading rate of TCE from the cave stream to cave air. Under extreme conditions such as prolonged drought, high loading rates may stretch the capacity of the air-control system and pose a higher risk of a PAM exceedance. As a contingency measure, therefore, high loading rates may trigger an increased frequency of monitoring to determine the need for air-control adjustments.

The table below defines actions levels based on cave-stream concentrations, for when high-loading rates are encountered at different temperature ranges. If the average TCE concentration detected in the cave-

stream samples is above the action level, air and water sampling will be performed monthly while the condition persists.

Season	Average Daily Outside Air Temperature	Cave Stream TCE Action Level (µg/L)
Winter	Below 40 °F	5
Transitional	40 to 60 °F	4
Summer	Above 60 °F	3

Monthly air and water sampling is already planned for 2018, therefore this contingency applies only when the air-sampling program is less frequent than monthly (e.g., 2019 and beyond).

The temperature-adjusted action levels reflect the seasonal differences in the capacity of the vent-well system to induce up-cave airflow. As described in Section 2.2.3.1, the effectiveness of the vent-well system at creating up-cave airflow is greatest under winter conditions, and so the system can more easily offset higher stream concentrations in cold weather. The system is less effective under summer conditions, and so a lower cave-stream concentration action level is set.

The cave-stream action levels are set conservatively. The action levels above are based on an interpolation of empirical performance data, for the case where Area 1 and 2 TCE air concentrations average 1 µg/m^3, and with the vent well system operating at 80% its maximum capacity, loading from the stream would yield Area 3 cave air-concentrations that contribute to a PAM result of 5 µg/m^3. These assumptions build a margin of safety into the sampling program intended to prevent PAM exceedances.

Cave-stream TCE action levels may be adjusted with the approval of USEPA based on additional, subsequently-developed data.

3.2.3 Other Contingency Monitoring Scenarios

Additional air sampling may be completed if conditions arise that elevate uncertainty about air quality in the caverns, such as:

- A previously untested air control approach is implemented in which the air quality response is uncertain
- Compliance and/or routine monitoring results exhibit an increasing trend that may require non-routine air control changes
- A temporary failure of one or more air control
- Previously untested climatic conditions are encountered
- A change in business operations that may alter the amount of time tour guides spend in the caverns.

Note that specific contingency plans have been developed for vent-well blower outages and floods. These topics are addressed in Section 5. For other situations that may arise, the specific scope of additional sampling will be determined via discussion with USEPA and MDNR as those conditions occur, based on the understanding of cavern conditions at that time. Additional sampling may involve a short-term increased frequency of the regular monitoring program or more targeted sampling in select locations to efficiently demonstrate that no adverse changes have resulted from a changed condition.

3.3 Compliance Personal Air Monitoring

PAM samples will be collected to demonstrate that air quality meets the criteria to continue normal operations. Samples will be collected to represent exposure of a typical cavern tour guide completing a full workday. The model exposure scenario is as follows:

	Worker Schedule Tested
Length of Workday	8.5 hours
Number of Tours Completed	Maximum of 4 tours of approximately 1.5 hours each
Time in Area 3 (behind airlock)	Approximately 30 minutes per tour
Break-time Rest Areas	Non-tour time may be spent in Ballroom or Entrance Building, at discretion of the tour guide or as required by the USEPA.

TRW will collect PAM samples following a tour guide (selected at random) through a workday. Because each tour guide conducts tours somewhat differently and chooses to spend his or her break time in different ways, each PAM sample collected will reflect minor differences of exposure time in each area of the cavern. Note that actual guides may spend a portion of their break time outside. When this occurs, the sampler will remain in the cafeteria area.

Note that the worker schedule described above is most representative of periods of peak-tourism; i.e., Memorial Day to Labor Day. In off-peak periods, most guides work fewer than 4 tours per day, and often work less than 8.5-hour shifts. During winter months (November to February), the cavern hours of operation are typically 7 hours long. The 8.5-hour/4-tour schedule is a reasonable worst-case worker scenario, and will typically overestimate actual worker exposure, particularly in off-peak periods of the year. For consistency, the peak-season worker schedule will be tested year-round; however, the results should be understood as conservative in off-peak periods.

The sampling will be conducted as follows:

- One PAM sample will be collected per event.
- Samples will be collected via 6-liter evacuated stainless steel canisters (Summa canisters), obtained from an Environmental Laboratory Approval Program (ELAP) certified laboratory (as specified in the QAPP). Canisters will be used only if received from the laboratory with a vacuum of at least -25 inches of mercury (in. Hg). Canisters used for PAM samples will be individually certified clean.

- Canisters will be obtained with laboratory-supplied vacuum gauges and flow controllers pre-set for collecting a sample over an 8.5-hour time period (i.e., the standard duration of a tour guide's shift, including lunch break).
- The canister will be placed in a backpack, with the intake protruding at least 3 inches outside of the zipped volume of the bag.
- The sampler will carry the backpack for the full period of time spent in the cavern, outside of the entrance building. For the period of time spent within the entrance building, the backpack may be taken off and placed in an open area within the Gift Shop and cafeteria area.
- The sampler will keep a log of times spent in, at a minimum: 1) the entrance building, 2) the area between the entrance building and the airlock, and 3) the area behind the airlock.
- At the end of the simulated workday, the canister will be removed from the backpack, sealed, and labeled with the sample identification number. The sample will be shipped via overnight carrier for laboratory analysis of TCE via USEPA Method TO15.
- During the first year of the monitoring program, PAM samples will be analyzed via expedited (3-day) turnaround, for which the lab will report only TCE results. In subsequent years, a standard turnaround time will be requested, and the laboratory will report the full TO-15 analyte list.

If an equipment or shipment problem renders a collected PAM sample unusable, TRW will be prepared to repeat PAM sampling within 2 weeks. As described in the QAPP, backpack blank samples will be collected for three consecutive events when new backpacks are used. A backpack blank will be collected by deploying an 8.5-hour regulated canister in an identical backpack, placed at the outdoor air location (see **Table 1** for description).

Over the future course of the monitoring program, TRW may evaluate alternative air sampling approaches to potentially replace the backpack sampling method described above. Any such changes would be discussed with USEPA and MDNR and would only be implemented after appropriate testing.

3.4 Stationary Air Sampling

Stationary air samples will be collected in conjunction with each PAM sampling event. All monitoring events will include a fixed set of five primary stationary samples to provide continuity and consistency for purposes of tracking air control performance. Provisions will also be made to collect up to two supplemental stationary samples (or "floaters") in any given event, as needed to fill a current data need.

Primary Stationary Sample Locations	Potential "As-Needed" Supplemental Sample Locations
Gift shop	Cafeteria, Ticket Counter
Ballroom	Honeymoon Room, Echo Room
Theater Room	Airlock, Lassie Room
Loot Rock	Atomic Shelter Passage
Jungle Room	Mud Alley, Amphitheater Entrance

Table 1 describes the specific sample locations. Locations are also shown on **Figure 5**. Additional potential supplemental "floater" locations may also be identified, based on future results; however, samples will only be collected if a valid data need has been identified. Not all locations are anticipated to be sampled. Samples will be collected via 6-liter Summa canisters, following the procedures outlined in **Appendix G**. Canisters for routine monitoring will be batch-certified clean.

Samples will be deployed in the cavern for an 8.5-hour period spanning a typical workday. Samples will be drawn from the approximate breathing height (3 to 5 feet above ground) of a site worker. Quality control samples will be collected at the frequency indicated in the QAPP. Once each canister is full (i.e., -5 in. Hg remaining, as measured by a pressure gauge or sample period has elapsed), it will be sealed and labeled with the sample identification number. Samples will be shipped via overnight carrier to the analytical laboratory for analysis of chlorinated VOCs via USEPA Method TO-15.

3.5 Cave Stream Sampling

Cave stream water samples will be collected at two cave stream locations at the monitoring frequency described in Section 3.1. Samples will be collected in the primary cave stream adjacent to the following locations (shown on **Figure 5**):

- Jungle Room
- Above the falls near Loot Rock.

Cave stream water samples will be collected as direct grab samples from the approximate center of the cave stream. Due to health and safety concerns, samples will be collected with an extendable rod from the stream bank rather than by wading. The sample collection methodology will be as follows:

1. Samples will be collected in order from downstream to upstream.
2. Samples will be collected directly into a pre-cleaned baked glass container near the mid-point (vertically) of the water column.
3. The sample collection container will be immersed at an angle such that water gently flows in with minimal disturbance.
4. The sample water will then be carefully transferred into a laboratory-certified pre-preserved container.
5. After the sample has been collected, an additional aliquot of stream water will be grabbed for measurement of temperature and specific conductance using a calibrated field meter (e.g., Oakton PC450 or similar).

The cave stream water samples will be analyzed for VOCs by USEPA method 8260B. Quality control samples will be collected as indicated in the QAPP.

3.6 Cave Stream Discharge Measurement

Discharge of the cave stream will be gauged at the frequency described in Section 3.1 during each cave stream sampling event. Gauging will be performed after water sampling is complete to minimize potential

interference with samples. Gauging will be completed by the velocity-area method, on a cross-sectional transect of the cave stream at the first bridge upstream of Loot Rock, as shown on **Figure 5**.

At the cave stream discharge measurement location, the flow will be measured using the velocity-area method, using a flowmeter to measure the average current velocity at regular intervals across a perpendicular transect of the stream.

The methodology is as follows:

1. Measurements of stream velocity are collected with a portable electromagnetic flowmeter (e.g., Marsh-McBirney Flo-Mate Model 2000, or similar) mounted on a graduated rod.
2. Measurements are completed at 1-foot intervals, demarked with a measuring tape, crossing the cave stream on the upstream side of the bridge.
3. At each measurement point, the stream depth is gauged.
4. If the stream depth is less than or equal to 2.5 feet (expected condition), the average stream velocity is measured estimated based on the 0.6 (60 %) depth method (e.g., if the depth is 1 foot, the velocity measurement will be collected 0.6 foot below the water surface).
5. If the stream depth is greater than 2.5 feet, the two-point method is used. The two-point method consists of measuring the velocity at 0.2 (20%) and 0.8 (80%) of the depth from the water surface and using the average of the two measurements.
6. The total discharge will be calculated as the sum of the flows in each 1-foot segment of the transect, calculated as average velocity multiplied by the depth and width of the segment.

3.7 Continuous Climate Monitoring

A continuous climate data monitoring station will be maintained at its current location, approximately 100 feet downstream of the Jungle Room. The station will continue to record the following measurements every 5 minutes:

- Air temperature
- Relative humidity
- Air velocity
- Air flow direction.

The station is a WindSonic 2D anemometer, designed to monitor air velocity and direction at low speeds, with additional sensors for temperature and humidity. Instrument specifications for the anemometer and other sensors are included in **Appendix A**.

A separate temperature and relative humidity monitoring station will be established outside the cavern, in a location shaded from direct sunlight. Additional temperature and relative humidity monitoring points are also included as a component of the Secondary Effects Monitoring Plan (**Appendix F**). Climate data from all monitoring stations will be downloaded during each air sampling event, or more frequently if needed to support other activities.

3.8 Stream Stage Measurement

During each air or water sampling event, TRW will record the stage of the cave stream at least once during the day. Measurements will provide a record of relative stream height to help evaluate potential related trends in air quality. Measurements will be made from a consistent reference point established at the first bridge upstream of Loot Rock. Measurements will be recorded via a weighted tape, with markings in 0.01-foot increments.

3.9 Manual Air Flow Measurement

Cross-sectional airflow will be measured at the frequency described in Section 3.1 at a transect adjacent to the permanent anemometer station near the Jungle Room (**Figure 5),** a location previously established by the USGS as appropriate for estimating the total airflow through the mainstem of the cavern entering or exiting the developed areas. These measurements will provide a quality check on the continuously logging anemometer and improve estimation of volumetric airflow rates based on the linear velocity anemometer measurements.

Because air velocities are known to oscillate in response to the outside air temperature changes, air flow will be monitored only during a period of the day when outdoor temperatures are anticipated to be stable (e.g., not expected to vary by greater than 4° F within a 1-hour period). Measurements will be conducted as follows:

1. If the cross-section dimensions are not already known, measurements will be taken to estimate the cross-sectional area of the transect. Note that the Jungle Room station cross-section has been established to be 13 square meters (140 square feet).
2. Individual air velocity measurements will be taken on a grid of approximately equal-area cells encompassing the entire cross-section. Where the USGS has previously established a measurement grid (e.g., at both Jungle Room and Theater Tunnel), TRW will collect measurements at those grid points. If a new grid is to be established, the nominal target grid size will be 2.5 feet high by 2.5 feet wide (6.25 square feet). For example, the 140-square-foot cross-sectional area at the Jungle Room will be subdivided into approximately 22 equal-area cells. If a high degree of variability is noted, the grid may be refined.
3. A measuring tape and measured rod will be used to locate the approximate lateral and vertical position of each measurement.
4. Air velocity will be measured using a hot-wire anemometer with omnidirectional probe with a resolution of 0.01 meter per second (m/s; 2 feet per minute). The anemometer will be held upwind, in the approximate center of each grid cell. To assist in measuring accurate air velocities, a tripod or similar anchoring device will be used. Readings will be recorded as follows:
    a. After the anemometer has been moved to a measurement point, it will be held steady until stable airflow is re-established (until measurements vary no greater than ± 15%, or up to 1 minute).
    b. After equilibration, the maximum, minimum, and average velocity will be recorded over an additional approximately 15-second period.

5. To test whether airflow conditions changed significantly during the period of measurement, two or more measurements collected at the start of the transect will be repeated after the full transect has been measured.
6. Total air flow in the transect will be computed as the average velocity of each equal-area cell times the total cross-sectional area. If non-uniform cells are used, the average velocity will be weighted to the cell size.

Note that temperature, relative humidity, wind velocity, and wind direction will be recorded continuously at the Jungle Room climate station adjacent to the measured transect. If air flow is measured in other areas of the cavern, temperature and relative humidity measurements will be recorded at a minimum of four locations within the cross-section to test for stratification. If air flow direction is not immediately apparent, it will be visually noted based on a small puff of fine powder (e.g., a single puff of baby-powder) to act as an airflow tracer.

4 SECONDARY EFFECTS MONITORING

The air control monitoring described above comprises tasks focused on evaluating air control performance and ongoing air quality compliance with respect to TCE in cave air. A supplemental program will simultaneously monitor for potential secondary effects – defined as significant changes to the cavern resulting from implementation of the air controls that may impact its use as a show cave.

Secondary effects monitoring entails a combination of quantitative data collection and direct observations, including:

- A preliminary assessment of sensitive cave features and current conditions for comparison against future observations (completed March 28 and 29, 2017)
- Ongoing observation and activity tracking by MCE to document new or changed conditions observed in the course of normal operations and record activities (such as mold cleanup) that are potentially related to secondary effects
- Routine monitoring, including observational checkups on new or previously identified areas of concern, and measurement of parameters (e.g., temperature and evaporation rate) that may aid in identification or troubleshooting of secondary effects.

The full scope and procedures are described in the Secondary Effects Monitoring Work Plan, provided as **Appendix F**.

5 CONTINGENCY PLANNING

Under emergency flooding or power outage situations, operations of the air control measures will vary from standard operations. In these circumstances, the contingency plan outlined in **Table 2** shall be followed. A summary of the appropriate actions is outlined below.

5.1 Flooding of Cavern

If flooding is expected to occur, the primary response action is to remove all air control equipment that may be damaged. MCE will be responsible for removing each of the items below including:

- Removing the anemometer located near the Jungle Room by unplugging it from the power source, removing the RH/Temperature sensor, and unscrewing the small data-logger cabinet clamped to the hand rail, and lifting the anemometer from its PVC mounting post
- Retrieving the temperature/RH data loggers throughout the lower levels of the cavern.
- Removing the differential pressure logger at the Ballroom SSDS.

The airlock doors must also be opened if a flood may reach the Dip area. The airlock doors should be securely tied open so that they do not inadvertently close as water flows through them.

Additional flood response details are included in **Table 2**.

5.2 Loss of Vent-Well System Operation

If the vent-well system shuts down due to lost power or equipment malfunction, response actions may be required.

- Under most power loss situations, the system's standby generator will automatically begin powering the vent-well system. The cavern's existing backup generator will power in-cavern air control measures, such as the SSDS. If power loss is momentary, normal operations may continue.
- For longer outages, or potential failure of critical system equipment, MCE operations will need to temporarily be adjusted as described in **Table 2**. The blower system sends out automated e-mail alarms that the blower has shut off, alerting both TRW and MCE automatically.

Additional vent-well system loss response details are included in **Table 2** with alarm conditions outlined in **Table 3**.

6 REPORTING/COMMUNICATIONS

Implementation of this Plan will be documented in progress reports (PRs) submitted to USEPA and MDNR. The PRs will include the following:

- Summaries of all significant developments during the preceding period including the actions performed and any problems encountered
- Analytical data received during the reporting period
- Other monitoring data, such as temperature and airflow readings, obtained within the monitoring period
- Summary of activities anticipated during the next reporting period, including a schedule of actions to be performed, potential problems, and planned resolutions of past or potential problems.

In addition to the PRs, TRW will hold status calls to update USEPA and MDNR on interim findings. Each call will be summarized in a brief e-mail to be sent out afterward.

The communication schedule will consist of monthly progress reports and/or status calls throughout the remainder of 2018, moving to quarterly progress reports in 2019. TRW will work with USEPA to identify the most appropriate reporting frequency as the program moves forward.

For unplanned vent well system outages where the system is offline for greater than 15 minutes, USEPA and MDNR will be notified within 48 hours.

7 REFERENCES

Arcadis. 2015. Cave Air Work Plan. La Jolla Spring Cave Complex. Stanton, Missouri. Arcadis. Lenexa, Kansas. May 29.

Arcadis. 2016a. Phase Two Cave Air Work Plan. La Jolla Spring Cave Complex. Stanton, Missouri. Arcadis. Lenexa, Kansas. February 2.

Arcadis. 2016b. Phase Two Addendum Air Controls Work Plan. La Jolla Spring Cave Complex. Stanton, Missouri. Arcadis. Lenexa, Kansas. July 15.

Arcadis. 2016c. Quality Assurance Project Plan. La Jolla Spring Cave Complex. Stanton, Missouri. Arcadis. Lenexa, Kansas. June 17, 2016; Revised July 11, 2016.

United States Environmental Protection Agency (USEPA). 2002. Guidance for Quality Assurance Project Plans. EPA QA/G-5. United States Environmental Protection Agency. Office of Environmental Information. Washington, D.C. EPA/240/R-02/009. December.

United States Environmental Protection Agency (USEPA). 2007. Administrative Settlement Agreement and Order on Consent for Remedial Investigation/Feasibility Study for the Oak Grove Village Well Superfund Site, Operable Unit 2, City of Sullivan Landfill RI/FS.

United States Environmental Protection Agency (USEPA). 2016. Administrative Settlement Agreement and Order on Consent for Removal Action for the Oak Grove Village Well Superfund Site, La Jolla Cave Complex, Franklin County, Missouri.

TABLES

Table 1
Summary of Cave Air Sampling Locations
TRW Automotive
Meramec Caverns
Stanton, MO

ARCADIS Design & Consultancy for natural and built assets

Stationary Sample	Cave Area	Description of Sample Location
Primary Locations		
Gift Shop	1	Behind cash register counter, placed on a rolling cart.
Ballroom	2	On the main stage, placed near the rear of the stage.
Theater	2	Behind the electronic equipment station in a very small side room next to the bleacher seating.
Loot Rock	3	On the stream bank between the handrail and the stream channel as close to the falls as possible.
Jungle Room	3	Approximately 8 feet past the end of trail hand rail between the cave wall and stream bank.
Potential Supplemental Locations		
Cafeteria	1	In the back portion of the cafeteria, placed behind the partitioned section of the seating area.
Ticket Counter	2	Behind the ticket counter
Honeymoon Room	2	In Honeymoon Room.
Echo Room	2	Just past the handrail, placed near the light switching station.
Airlock	2-3	At the mid-point between the air lock doors between the hand rail and the cave wall.
Lassie Room	3	Beyond the handrail and around the first bend that leads up to Atomic Shelter Passage, placed on steps cut into the clay bank that leads to electrical panel.
Atomic Shelter Passage	3	Near the top of the passage at a narrow choke point before the passage splits. The location is marked with survey ribbon tied around a rock.
Mud Alley	3	Approximately 150 feet up passage on a large block of clay located in the center of the passage. The stream channel flows under the large block of clay.
Amphitheater	NA	In the rear of the room, adjacent to largest opening (on right-hand-side) at the top of the sloped back wall.
Outside air blank	NA	Near the gazebo, placed on the river side of the stone wall.

NA: Not Applicable

Table 2
Contingency Planning
TRW Automotive
La Jolla Spring Cave Complex
Stanton, Missouri

ARCADIS Design & Consultancy for natural and built assets

Air Control	Contingency Planning Scenario			
	Flooding of Cavern		Loss of Vent Well Operation	
Scenario	Action	Responsible Parties	Action	Responsible Parties
Vent wells	Shut down vent well blowers during flooding conditions where the blower inlet piping may be blocked by the rising water.	TRW	For normal outages resulting from power interuption, the system backup generator will restore vent well operation within 5 minutes. System will send a notification to TRW and to designated MCE employees or specified phone lines that the power transfer was successful.	No action required.
			If the system does not come back online in 5 minutes, the system will automatically send an alert to TRW and alert MCE employees or specified phone lines.	TRW follow-up with MCE on system status, and need for additional action (as described below).
			TRW will determine cause of the outage and expected timeline to bring the system back online.	TRW
Airlock	Doors open if flood waters are expected to reach the Dip in the cavern.	MCE will open airlocks in anticipation of flooding.	While the vent wells are off, airlock doors should be used to maintain separation between the air in Areas 2 and 3.	MCE responsible for airlock use.
Entrance wall windows	No change.	NA	No change.	NA
Anemometer Station	Remove anemometer station by completing the following: 1) Unplug the station from the power outlet. 2) Remove the small box housing the data logger from the handrail support post by unscrewing the clamps. 3) Remove the anemometer itself from the PVC post upon which it is mounted.	MCE to remove anmemometer station prior to flooding event.	No change.	NA

Table 2
Contingency Planning
TRW Automotive
La Jolla Spring Cave Complex
Stanton, Missouri

ARCADIS Design & Consultancy for natural and built assets

Air Control	Contingency Planning Scenario			
	Flooding of Cavern		Loss of Vent Well Operation	
Scenario	Action	Responsible Parties	Action	Responsible Parties
Cave Tours	Operate as allowed by tour path access as along as vent wells are on. If vent wells are shut down, follow loss of vent well contingency plan.	MCE to adjust or discontinue tours at their discretion	Tours will be allowed as described below:	
			1. For planned maintenance shutdowns of 15 min or less, tours may continue as normal.	TRW will alert MCE to planned shutdowns. If system cannot be restarted in 15 min, MCE will be instructed to implement Item 2 (below).
			2. For unplanned outages, or outages of unknown duration, no new tours will enter Area 3. Tours already in progress in Area 3 may continue.	MCE and TRW will be notified of an outage automatically via email. TRW will phone MCE immediately upon confirming outage. MCE will adjust tours.
			3. A sign will be posted in front of airlock door 1: "This area temporarily closed" when tours limited to front-half of the cave (Area 2)	MCE will post sign limiting tours.
			4. If the system resumes operation in 30 minutes or less, tours of the full cavern may resume without delay.	TRW will notify MCE when vent well system is operating again
			5. If the system resumes operation after greater than 30 minutes of outage, tours that include Area 3 can resume after an additional 15 hours. Tours in Area 2 may continue.	TRW will notify MCE when the vent well sysetm is operating again. MCE adjust tour schedule as needed.
GAC Water Treatment	Visually inspect treatment system prior to use after flooding. Stream will have increased suspended solids after a flooding event which may require more frequent replacement of the bag filters.	MCE to visually inspect treatment system and hose connections prior to use after flooding	No change.	NA

Table 2
Contingency Planning
TRW Automotive
La Jolla Spring Cave Complex
Stanton, Missouri

ARCADIS Design & Consultancy for natural and built assets

Air Control	Contingency Planning Scenario			
	Flooding of Cavern		Loss of Vent Well Operation	
Scenario	Action	Responsible Parties	Action	Responsible Parties
Wine Room Vent Wells	No change.	NA	No change.	NA

Notes:
GAC = granular activated carbon
PVC = polyvinyl chloride
MCE = Meramec Cavern Enterprises
NA = Not Applicable

Table 3
Alarm Conditions
TRW Automotive
La Jolla Spring Complex
Sullivan, Missouri

ARCADIS Design & Consultancy for natural and built assets

Alarm Name	When Alarm is Enabled	Cause of Alarm	Automatic System Response to Alarm
Vent-Well System Alarms			
Drives Enabled	Continuously	Drive disable button on the motor control electrical panel was pushed.	Shut down vent-well system
AC Power Fail	Continuously	Electrical service interrupted	Automatically transfer the electrical load to the generator.
UPS Power Fail	Continuously	Uninterruptible Power Supply batteries lost charge.	Alarm notification; no change to vent-well system operation
VAC-100 Transmitter Fail	When B-100 in use	Vacuum transmitter lost connection to the PLC.	Alarm notification; no change to vent-well system operation
VAC-100 Low-Low Alarm	When B-100 in use	Vacuum less than low low alarm setting (1 inch of water)	Alarm notification; no change to vent-well system operation
VAC-100 Low Alarm	When B-100 in use	Vacuum less than low alarm setting (3 inches of water)	Alarm notification; no change to vent-well system operation
VAC-100 High Alarm	When B-100 in use	Vacuum pressure greater than the high alarm setting (7 inches of water)	Alarm notification; no change to vent-well system operation
VAC-100 High High Alarm	When B-100 in use	Vacuum pressure greater than the high high alarm (9 inches of water)	Alarm notification; no change to vent-well system operation
VAC-101 Transmitter Fail	When B-101 in use	Vacuum transmitter lost connection to the PLC.	Alarm notification; no change to vent-well system operation
VAC-101 Low-Low Alarm	When B-101 in use	Vacuum less than low low alarm setting (1 inch of water)	Alarm notification; no change to vent-well system operation
VAC-101 Low Alarm	When B-101 in use	Vacuum less than low alarm setting (3 inches of water)	Alarm notification; no change to vent-well system operation
VAC-101 High Alarm	When B-101 in use	Vacuum pressure greater than the high alarm setting (7 inches of water)	Alarm notification; no change to vent-well system operation
VAC-101 High High Alarm	When B-101 in use	Vacuum pressure greater than the high high alarm (9 inches of water)	Shut down vent-well system
B-100 Drive Fault	When B-100 in use	Electrical fault at B-100 blower (60 hp)	Blower will try to re-start. If caused by power disruption, automatically transfer the electrical load to the generator.
B-100 Blower Failed to Start	When B-100 in use	B-100 blower attempted to start up, but did not successfully	Alarm notification; system already off if blower cannot start. Vent-well system will attempt to restart again in 10 minutes.
B-101 Drive Fault	When B-101 in use	Electrical fault at B-101 blower (15 hp)	Blower will try to re-start. If caused by power disruption, automatically transfer the electrical load to the generator.

Table 3
Alarm Conditions
TRW Automotive
La Jolla Spring Complex
Sullivan, Missouri

ARCADIS Design & Consultancy for natural and built assets

Alarm Name	When Alarm is Enabled	Cause of Alarm	Automatic System Response to Alarm
B-101 Blower Failed to Start	When B-101 in use	B-101 blower attempted to start up, but did not successfully.	Alarm notification; system already off if blower cannot start. Vent-well system will attempt to restart again in 10 minutes.
TIT-101 Transmitter Fail	Continuously	Outside temperature sensor no longer communicating with PLC	Alarm notification; no change to vent-well system operation
TIT-101 Low-Low Alarm	If blower operations are controlled by outside temperature. Currently off.	Outside temperature less than low-low alarm (0 degrees F)	Alarm notification; no change to vent-well system operation
TIT-101 Low Alarm	If blower operations are controlled by outside temperature. Currently off.	Outside temperature less than low alarm (10 degrees F)	Alarm notification; no change to vent-well system operation
TIT-101 High Alarm	If blower operations are controlled by outside temperature. Currently off.	Outside temperature greater than high alarm (95 degrees F)	Alarm notification; no change to vent-well system operation
TIT-101 High High Alarm	If blower operations are controlled by outside temperature. Currently off.	Outside temperature greater than high high alarm (100 degrees F)	Alarm notification; no change to vent-well system operation
Standy Generator Alarms			
Generator Over Temperature	Continuously	If generator's diesel motor heats above the alarm temperature	Transfer back to electrical service; shut down vent-well system if no electrical service available to transfer back.
Generator Low Coolant	Continuously	Generator coolant fluid level below specified level	Alarm notification; do not shut off generator.
Generator Low Oil Pressure	Continuously	Oil level below specified quantity	Transfer back to electrical service; shut down vent-well system if no electrical service available to transfer back.
Generator Low Battery	Continuously	Generator battery has low charge.	Alarm notification; do not shut off generator.
Generator Low Fuel	Continuously	Generator has fuel below low fuel level.	Alarm notification; do not shut off generator.
Generator Fault	Continuously	Electrical fault at generator.	Transfer back to electrical service; shut down vent-well system if no electrical service available to transfer back.
ATS Failed to Transfer to Generator Power	Continuously	Load transfer to generator unsuccessful.	Transfer back to electrical service; shut down vent-well system if no electrical service available to transfer back.
ATS Failed to Transfer to Utility Power	Continuously	Load transfer to electrical service unsuccessful.	Transfer back to generator; shut down vent-well system if generator unavailable to transfer back.

Notes:

After electrical load transferred from electrical service to standby generator or from the standby generator back to electrical service successfully, a notification is sent out.
Hourly e-mail reminders are sent out while the vent-well system is powered by the standby generator.
Hourly e-mail reminders are sent out while the fuel is below the low fuel level.

Table 4
Responsible Parties for Air Control Operation and Maintenance
TRW Automotive
La Jolla Spring Cave Complex
Stanton, Missouri

ARCADIS Design & Consultancy for natural and built assets

Air Control	Responsible Party for Operation	Responsible Party for Maintenance
Vent-well system	TRW	TRW
Generator	TRW	TRW
Airlock	MCE	MCE
Entrance Windows	MCE	MCE
Amphitheater Wall	MCE	MCE
GAC Water Treatment	MCE	TRW
Wine Room Vent Wells	MCE	MCE
Giftshop SSDS	TRW	TRW
Ballroom SSDS	TRW	TRW
Vaul Ventilation System	TRW	TRW

Notes:
MCE: Meramec Caverns Enterprises
TRW: TRW Automotive

FIGURES

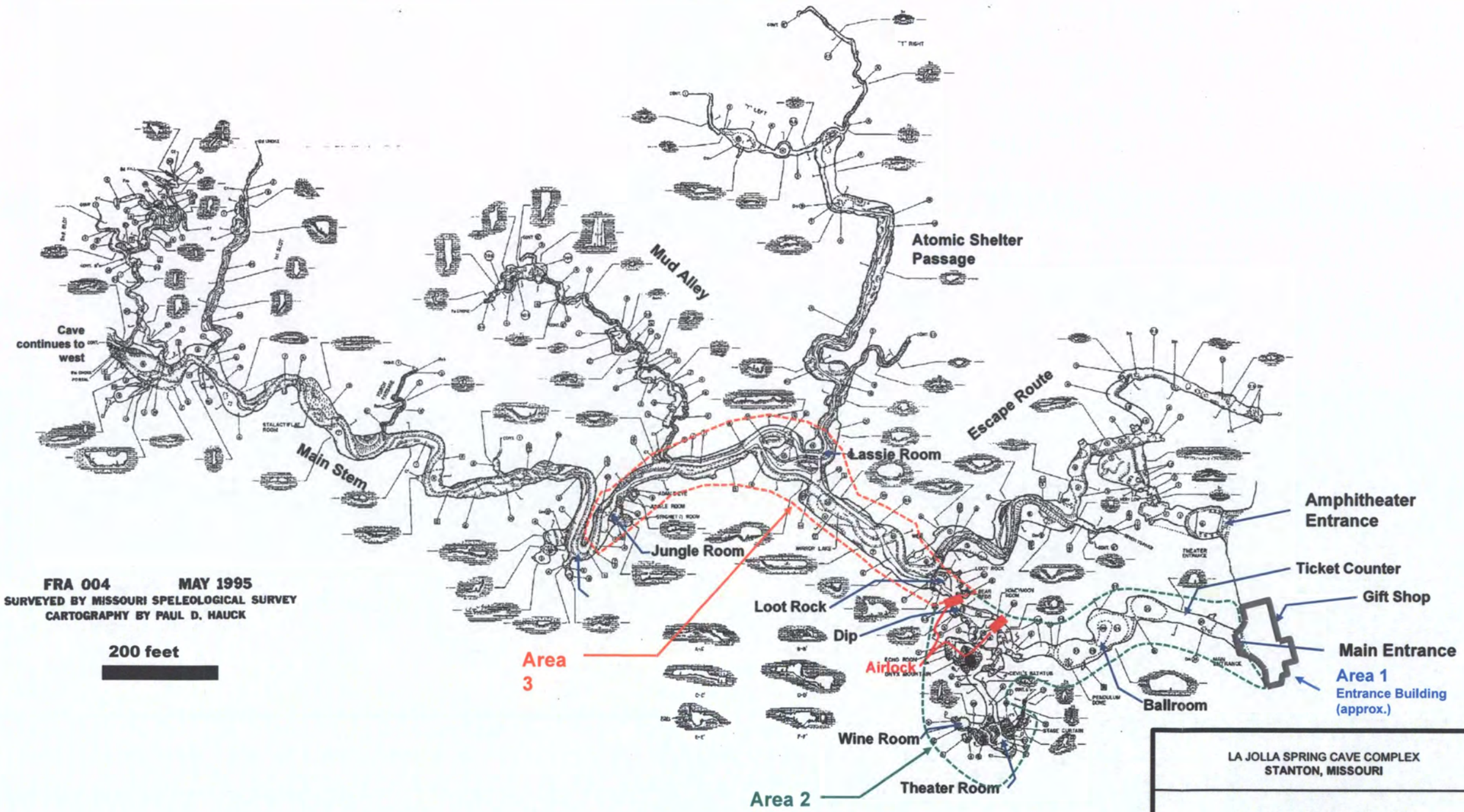

LA JOLLA SPRING CAVE COMPLEX
STANTON, MISSOURI

CAVERN LAYOUT

ARCADIS Design & Consultancy for natural and built assets

FIGURE 1

CITY:(LENEXA) DIV/GROUP:(ENV) DB:(COBB) LD:() PIC:() PM:(GHONFELT) TM:(OVERHOLTZER) G:\ SAVED:05MAY2015

1. GAC Water Treatment System

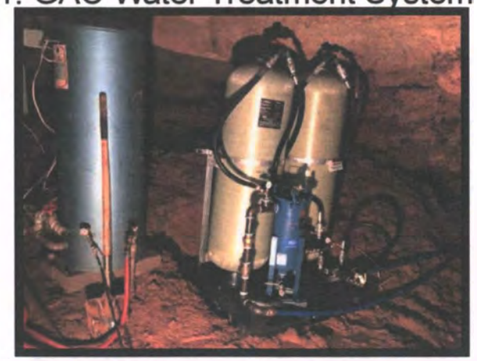

2. Airlock Doors (2 sets)

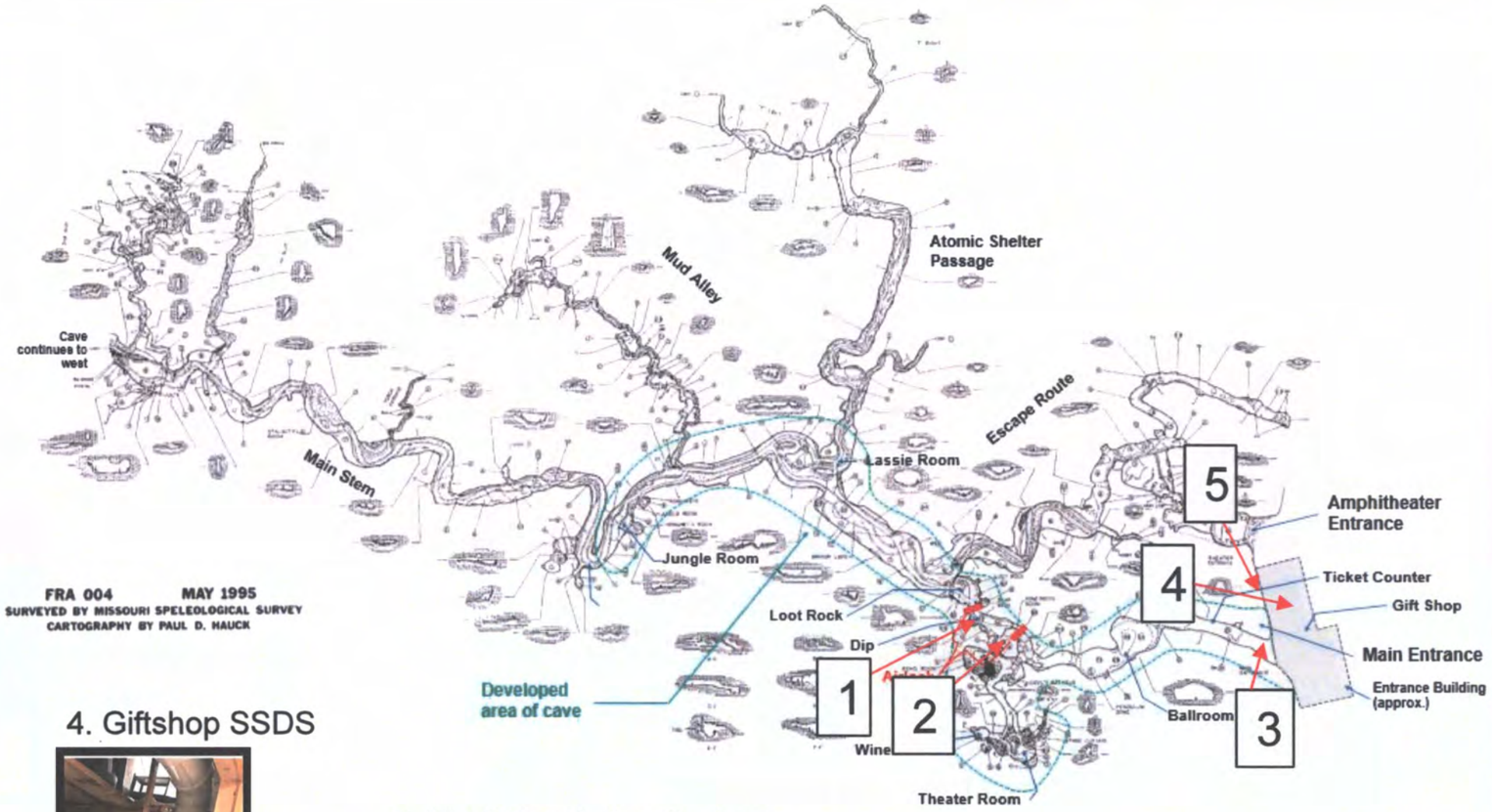

3. Ballroom SSDS

4. Giftshop SSDS

5. Vault Ventilation System

Notes: SSDS—Sub-slab Depressurization System
Air polishing units and GAC air treatment units are currently placed in reserve and not shown on map.

LA JOLLA SPRING CAVE COMPLEX
STANTON, MISSOURI

AIR CONTROLS WITHIN CAVERN

ARCADIS Design & Consultancy for natural and built assets

FIGURE 2

1. Vent Well System

2. New Entrance Wall and Windows

3. New Amphitheater Wall

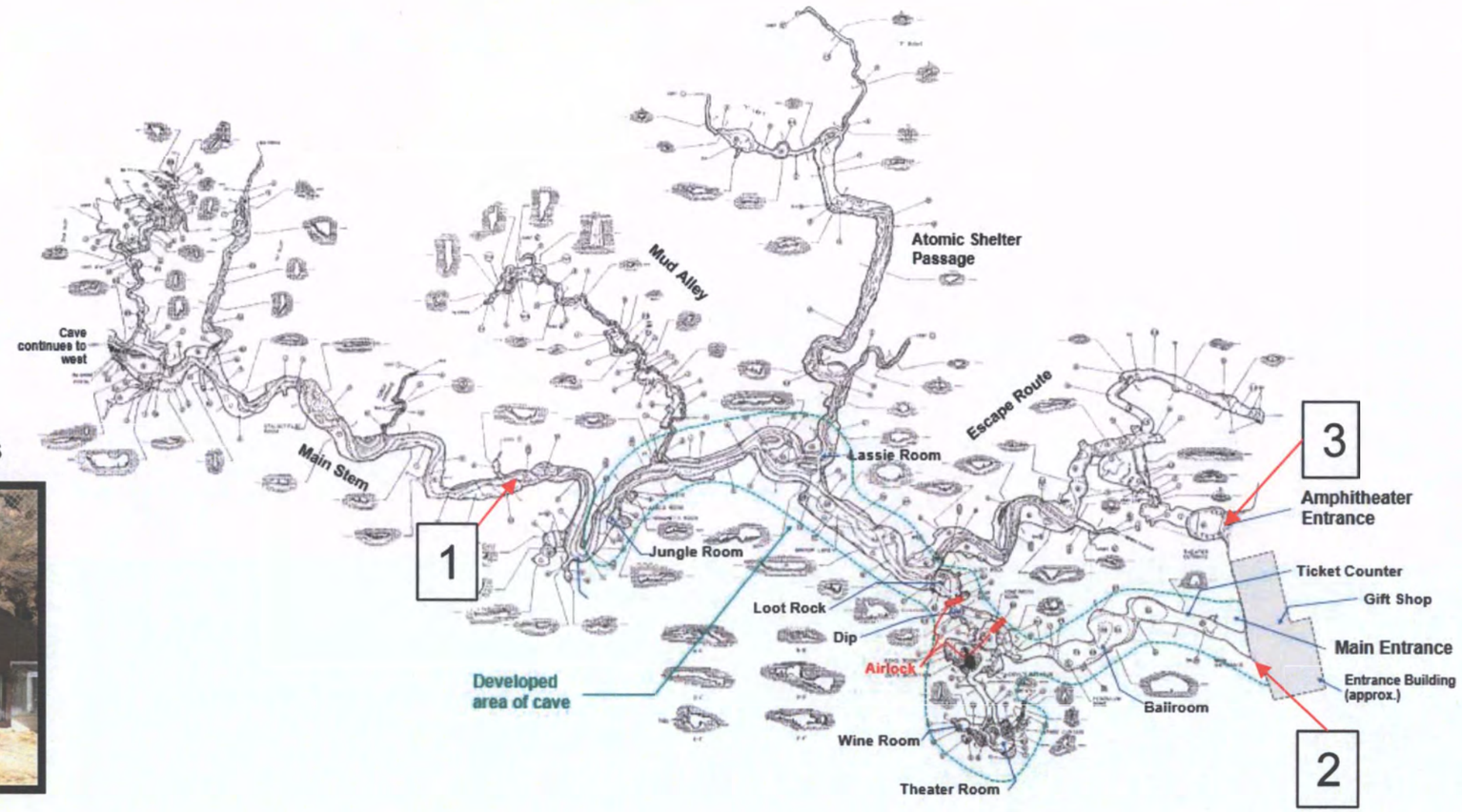

LA JOLLA SPRING CAVE COMPLEX
STANTON, MISSOURI

AIR CONTROLS OUTSIDE OF CAVERN

ARCADIS Design & Consultancy for natural and built assets

FIGURE 3

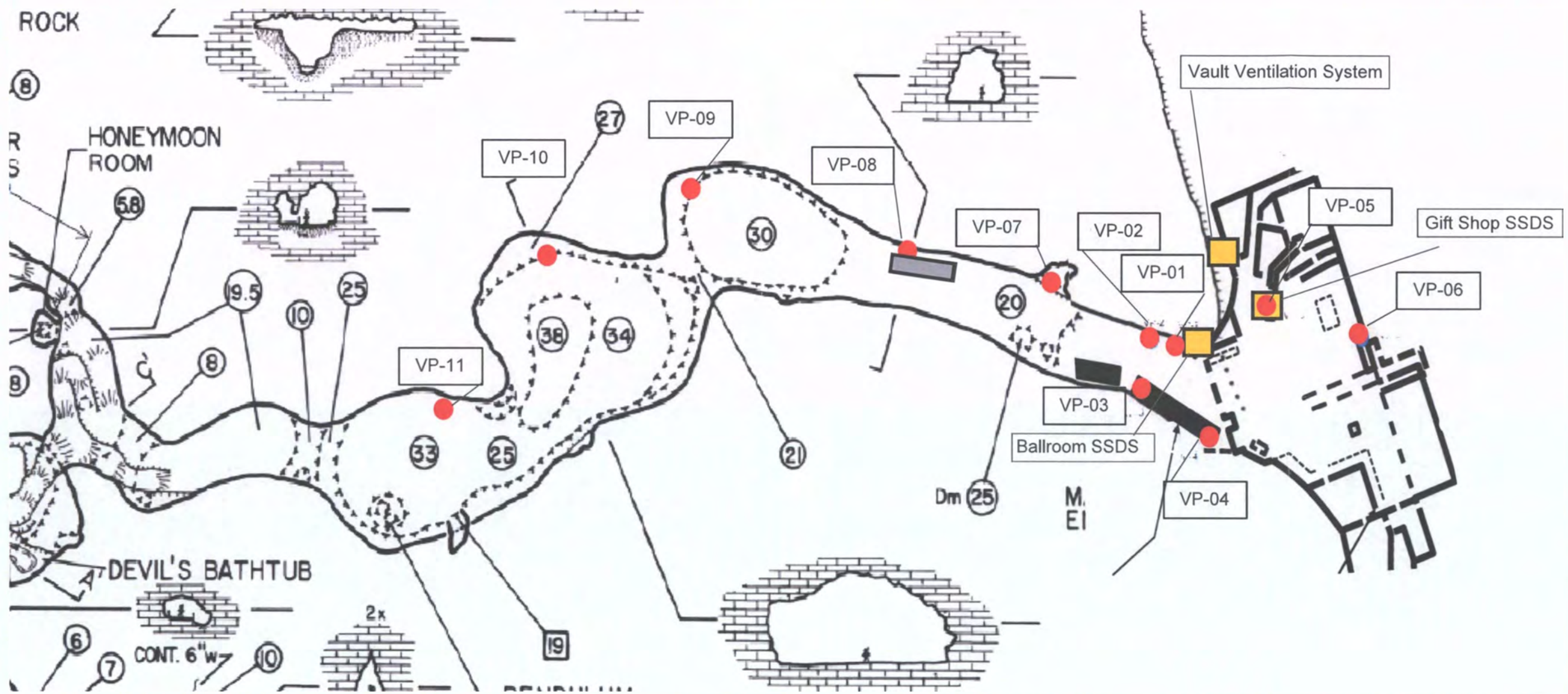

LEGEND

Sub-slab depressurization system or vault ventilation system

VP-01 Vapor pin measuring point

Ticket Counter

N

100 feet

Approximate Scale

LA JOLLA SPRING CAVE COMPLEX
Stanton, Missouri

SUB-SLAB DEPRESSURIZATION SYSTEM LAYOUT

ARCADIS Design & Consultancy for natural and built assets

FIGURE 4

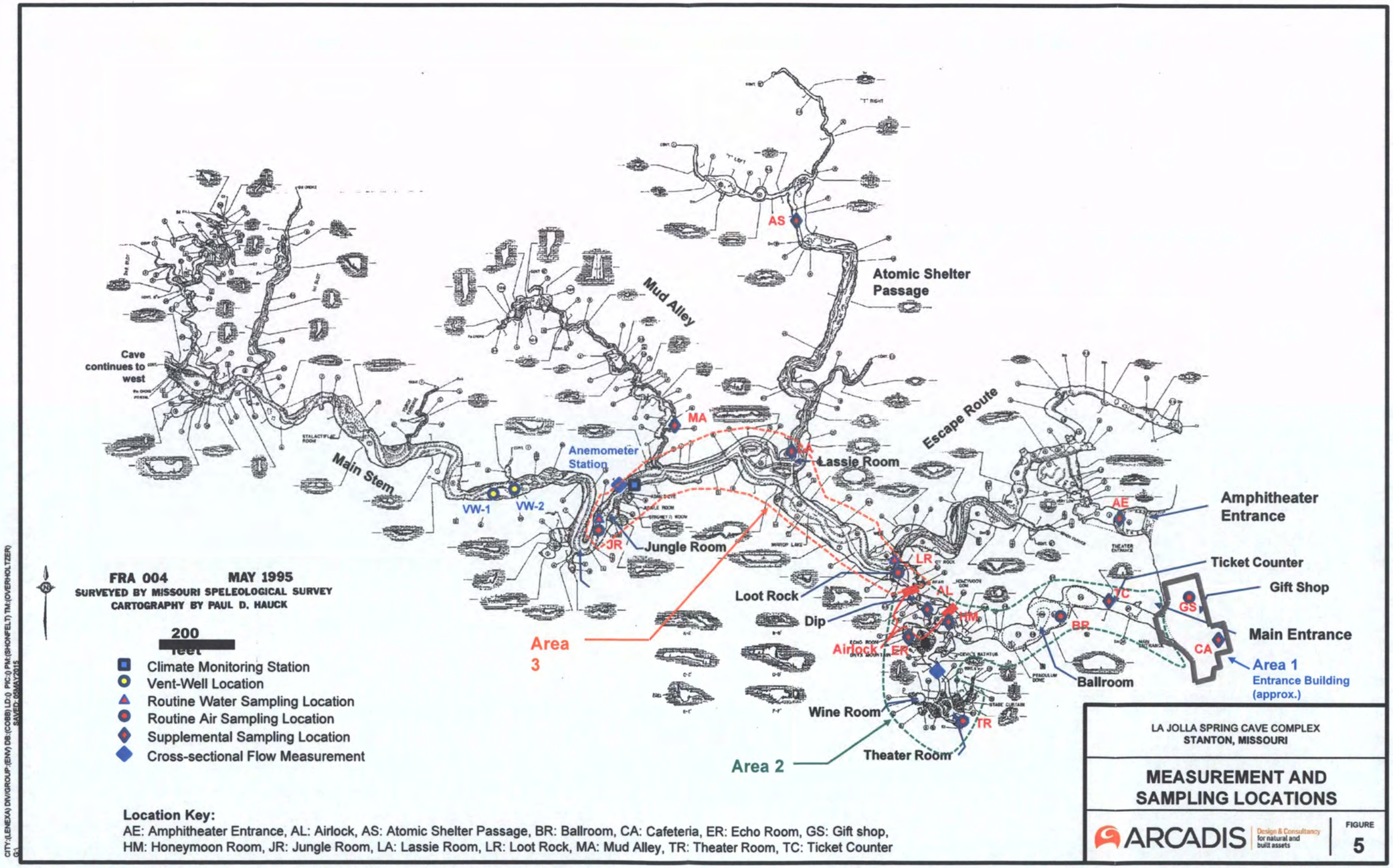

LA JOLLA SPRING CAVE COMPLEX
STANTON, MISSOURI

MEASUREMENT AND SAMPLING LOCATIONS

ARCADIS Design & Consultancy for natural and built assets

FIGURE 5

CITY:(LENEXA) DIV/GROUP:(ENV) DB:(COBB) LD:() PIC:() PM:(SHONFELT) TM:(OVERHOLTZER) G:\ SAVED: 05MAY2015

APPENDIX A

Air Control Documentation: Specifications and Manuals

Missouri Hometown Builders, L.L.C.

P.O. Box 15
Steelville, Mo. 65565
573-241-6889
Fax: 573-775-3916

COVER SHEET

Att: Grace Philpy

Date:10/14/2016

No. of Pages: 10

Comment: Door Spec's

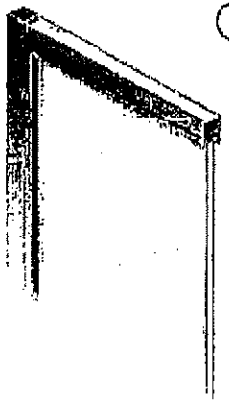

Oldcastle BuildingEnvelope™— a market leader in Standard Entrances

standard entrances

Oldcastle BuildingEnvelope™ offers standard, narrow, medium and wide stile entrances to meet a broad range of traffic requirements. All standard Oldcastle BuildingEnvelope™ entrances (3' wide) are ADA compliant and have built-in features.

Specifications

Oldcastle BuildingEnvelope™ entrances are durable and virtually maintenance free. We also offer a complete line of custom, specialty and all-glass entrances.

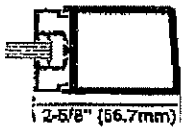

Series 212 – Narrow Stile

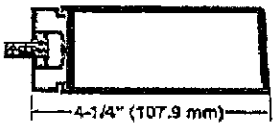

Series 375 – Medium Stile

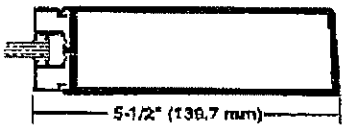

Series 500 – Wide Stile

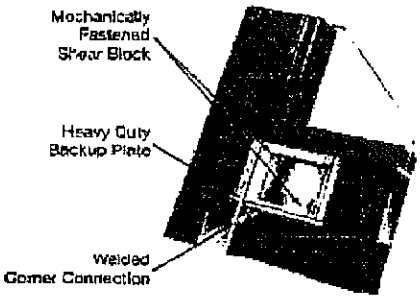

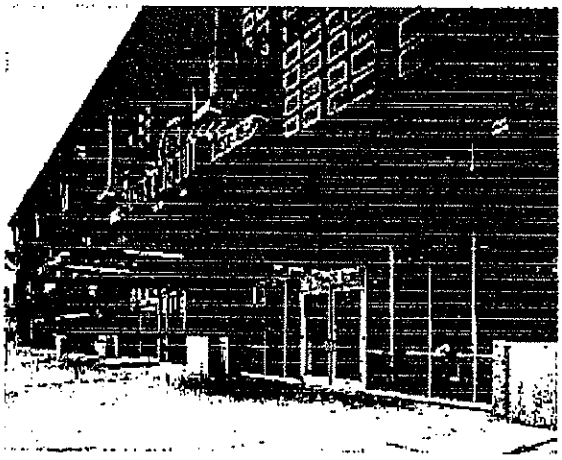

AT&T Park, San Francisco, CA
Architect: Populous (formerly HOK Sport)

Features

- Maximum security hook bolt locks
- 1" diameter push/pulls
- Adjustable astragal with dual weathering on pairs of doors
- Mechanically fastened shear blocks and welded corner construction
- Adaptable to virtually all hardware
- 4" to 10" one piece bottom rail options
- Glass stops with bulb gaskets
- 1/4", 3/8", 5/8" and 1" glazing options
- Adaptable to meet local building codes
- Limited lifetime warranty

Oldcastle BuildingEnvelope™ *Engineering your creativity™*

Oldcastle BuildingEnvelope®
Engineering your creativity™

GUIDE SPECIFICATION

Manufacturer:
Oldcastle BuildingEnvelope®
2425 Olympic Boulevard, Suite 525-East
Santa Monica, CA 90404
1-866-OLDCASTLE

SECTION 08 41 00 - ALUMINUM-FRAMED ENTRANCES AND STOREFRONT (NARROW STILE DOORS)

****

This guide specification has been prepared by Oldcastle BuildingEnvelope® in printed and electronic media as an aid to specifiers in preparing written construction documents for storefront systems.

This section includes Series 212 Narrow Stile aluminum doors, and door frames for exterior and interior applications, shop fabricated, factory pre-finished, for field glazing.

Door hardware may be specified in whole or in part in this section or in Section 08 71 00 - Door Hardware; coordinate requirements.

Sealants are referenced to Section 07 92 00, Joint Sealants.

Glass and glazing are referenced in Section 08 80 00, Glass and Glazing.

Where work of this section integrates with curtain wall, sloped glazing system, skylight, windows, or other glazing system, carefully coordinate both sections to function together. Air and vapor barrier continuity from this system to adjacent construction is critical to successful building air tightness; specify compatible materials in conjunction with adjacent air and vapor barriers.

Edit entire master to suit project requirements. Modify or add items as necessary. Delete items which are not applicable. Words and sentences within brackets [______] reflect a choice to be made regarding inclusion or exclusion of a particular item or statement. This section may include performance, proprietary, and descriptive type specifications. Edit to avoid conflicting requirements.

Editor notes are included within the text of this section to assist the specifier in knowledgeable decision-making.

****

PART 1 - GENERAL

1.01 SUMMARY

A. Related Documents: Conditions of the Contract, Division 1 - General Requirements, and Drawings apply to Work of this Section.

B. Section Includes:
1. Aluminum doors complete with hardware.

****
Edit paragraph below to suit project requirements.
****

C. Products Furnished But Not Installed Under This Section:
1. Anchoring devices which are built into masonry.
2. Anchoring devices which are cast in concrete.

****
This document incorporates CSI (Construction Specifications Institute) Manual of Practice principles of cross referencing to Division 1 sections and other sections. The cross references must be edited to retain only those other sections used. Other guide specifications for Oldcastle BuildingEnvelope®, including those of Skylights are available as follows:

Section 08 41 26	All-Glass Entrances and Storefronts
Section 08 43 13	Aluminum-Framed Storefronts
Section 08 44 13	Glazed Aluminum Curtain Wall
Section 08 44 23	Structural-Sealant-Glazed Curtain Wall
Section 08 44 33	Sloped Glazing Assemblies
Section 08 51 13	Aluminum Windows
Section 08 63 00	Metal-Framed Skylights

****

D. Related Sections:

1.	Section 01 43 39	Mockup
2.	Section 05 50 00	Metal Fabrications.
3.	Section 06 10 00	Rough Carpentry.
4.	Section 07 92 00	Joint Sealants.
5.	Section 08 42 20	Entrances.
6.	Section 08 45 00	Translucent Wall and Roof Assemblies.
7.	Section 08 51 00	Metal Windows.
8.	Section 08 71 00	Door Hardware.
9.	Section 08 81 00	Glass Glazing.
10.	Section 08 85 00	Glazing Accessories.
11.	Section 08 88 00	Special Function Glazing.
12.	Section 08 91 19	Fixed Louvers.

****
List reference standards that are included within the text of this section. Edit the following as required for project conditions.
****

1.02 REFERENCES

A. Aluminum Association (AA):

1.	DAF-45	Designation System for Aluminum Finishes.

B. American Architectural Manufacturers Association (AAMA):

1.	501.2	Field Check of Metal Curtain Walls for Water Leakage.
2.	2605	Voluntary Specification for High Performance Organic Coatings on Architectural Extrusions and Panels.
3.	606.1	Specifications and Inspection Methods for Integral Color Anodic Finishes for Architectural Aluminum.

4. 607.1 Specifications and Inspection Methods for Clear Anodic Finishes for Architectural Aluminum.
5. 608.1 Specification and Inspection Methods for Electrolytically Deposited Color Anodic Finishes for Architectural Aluminum.
6. 701.2 Specifications for Pile Weatherstripping.
7. Manual #10 Care and Handling of Architectural Aluminum From Shop to Site.
8. SFM□1 Aluminum Storefront and Entrance Manual.

C. American National Standards Institute (ANSI):
1. A117.1 Safety Standards for the Handicapped.

D. American Society for Testing and Materials (ASTM):
1. A36 Structural Steel.
2. A123 Zinc (Hot-Dip Galvanized) Coatings on Iron and Steel Products.
3. B209 Aluminum and Aluminum - Alloy Sheet and Plate.
4. B221 Aluminum-Alloy Extruded Bars, Rods, Wire, Shapes, and Tubes.
5. B308 Aluminum-Alloy 6061-T6 Standard Structural Shapes, Rolled or Extruded.
6. E283 Test Method for Rate of Air Leakage Through Exterior Windows, Curtain Walls and Doors.
7. E330 Test Method for Structural Performance of Exterior Windows, Curtain Walls and Doors by Uniform Static Air Pressure Difference.
8. E331 Test Method for Water Penetration of Exterior Windows, Curtain Walls and Doors by Uniform Static Air Pressure Difference.

E. Federal Specifications (FS):
1. TT-P-641G(1) Primer Coating, Zinc Dust-Zinc Oxide (For Galvanized Surfaces).
2. TT-P-645A Primer, Paint, Zinc Chromate, Alkyd Type.

F. Steel Structures Painting Council (SSPC):
1. Paint 12 Cold-Applied Asphalt Mastic (Extra Thick Film).

****

Use the article below carefully; restrict statements to describe components used to assemble the system. Do not repeat statements made in the SECTION INCLUDES article. Restrict statements to identify system performance requirements or function criteria only. Delete paragraphs not appropriate to project. The following paragraphs represent a suggested listing of performance criteria.

****

1.03 SYSTEM REQUIREMENTS

A. Design Requirements:
1. Drawings are diagrammatic and do not purport to identify nor solve problems of thermal or structural movement, glazing, anchorage, or moisture disposal.
2. Requirements shown by details are intended to establish basic dimension of units, sight lines and profiles of members.
3. Provide concealed fastening.
4. Provide entrance and storefront systems, including necessary modifications, to meet specified requirements and maintaining visual design concepts.
5. Attachment considerations are to take into account site peculiarities and expansion and contraction movements so there is no possibility of loosening, weakening or fracturing connection between units and building structure or between units themselves.
6. Anchors, fasteners and braces shall be structurally stressed not more than 50% of allowable stress when maximum loads are applied.
7. Provide for expansion and contraction due to structural movement without detriment to appearance or performance.

****

Include submittal requirements below which are consistent with scope of project and extent of work of this

section. Only request submittals which are absolutely necessary.
****

1.04 SUBMITTALS
- A. General: Submit in accordance with Section 01 30 00.
- B. Product Data:
  - 1. Submit manufacturer's descriptive literature and product specifications.
  - 2. Include information for factory finishes, hardware, accessories, and other required components.
  - [3. Include color charts for finish indicating manufacturer's standard colors available for selection.]
- C. Shop Drawings:
  - 1. Submit shop drawings covering fabrication, installation and finish of specified systems.
  - 2. Include following:
    - a. Fully dimensioned plans and elevations with detail coordination keys.
    - b. Locations of exposed fasteners and joints.
  - 3. Provide detailed drawings of:
    - a. Composite members.
    - b. Joint connections for framing systems and for entrance doors.
    - c. Anchorage.
    - d. System reinforcements.
    - e. System expansion and contraction provisions.
    - f. Glazing methods and accessories.
    - g. Internal sealant requirements and recommended types.
  - 4. Schedule of finishes.
- D. Samples:
  - 1. Submit manufacturers standard samples indicating quality of finish.
  - 2. Where normal texture or color variations are expected, include additional samples illustrating range of variation.
  - [3. Submit samples for each type of glass, 12 x 12 inch size.]
- E. Qualification Data:
  - 1. Submit installer qualifications verifying years of experience.

****
Include quality assurance requirements consistent with size and scope of project and extent of work of this section. Edit following article accordingly.
****

1.05 QUALITY ASSURANCE
- A. Single Source Responsibility:

****
Oldcastle BuildingEnvelope® is unique in the industry in single source responsibility. First, system design, extrusion, fabrication, and finishing occur at the same facility, and under strict tolerances, assuring uniformity of profile and finishes between systems. Second, Oldcastle BuildingEnvelope® products include a full array of storefront (including operable vents on some systems), curtain wall, all glass entrances, sliding mall fronts, sloped glazing, and flush faced aluminum framed doors, as well as all skylight products, allowing the designer and specifier a single source of responsibility when combining products from any of these categories.
****

  - 1. To ensure quality of appearance and performance, obtain materials for systems from either a single manufacturer or from manufacturer approved by systems manufacturer.
- B. Installer Qualifications: Certified in writing by system manufacturer as qualified for installation of

specified systems.

C. Perform Work in accordance with AAMA SFM□1 and manufacturer's written instructions.

D. Conform to requirements of ANSI A117.1 and local amendments.

1.06 DELIVERY, STORAGE, AND HANDLING

A. Comply with requirements of Section 01 65 00 - 01 66 00.

B. Protect finished surfaces as necessary to prevent damage.

C. Do not use adhesive papers or sprayed coatings which become firmly bonded when exposed to sun.

D. Do not leave coating residue on any surfaces.

E. Replace damaged units.

1.07 WARRANTY

****

Note: Longer warranty periods are available at additional cost.

****

A. Provide warranties in accordance with Section 01 78 36.

B. Provide written warranty in form acceptable to Owner jointly signed by manufacturer, installer and Contractor warranting work to be watertight, free from deflective materials, defective workmanship, glass breakage due to defective design, and agreeing to replace components which fail within 1 year from date of Substantial Completion.

C. Warranty shall cover following:

1. Complete watertight and airtight system installation within specified tolerances.
2. System is structurally sound and free from distortion.

****

Delete paragraph below if high performance fluoropolymer finish not used.

****

D. Provide written warranty stating organic coating finish will be free from fading more than 10%, chalking, yellowing, peeling, cracking, pitting, corroding or non-uniformity of color, or gloss deterioration beyond manufacturer's descriptive standards for 5 years from date of Substantial Completion and agreeing to promptly correct defects.

PART 2 - PRODUCTS

2.01 MANUFACTURERS AND PRODUCTS

A. Subject to compliance with requirements indicated, provide products by one of the following:

1. Oldcastle BuildingEnvelope®, Terrell, TX.

B. Substitutions: Submit under provisions of Section 01 63 00, a minimum of 10 days prior to bid date.

****

Edit the following paragraphs for appropriate system in each category and delete remaining. Refer to Oldcastle BuildingEnvelope® technical literature for additional information.

When specifying manufacturer's standard product or manufacturer's standard product with modifications, describe using manufacturer's name and model numbers.

****

glazing.

****

D. Entrance Doors:
   1. Fabricate with mechanical joints using internal [steel] reinforcing plates and shear blocks attached with fasteners and by welding.
   2. Provide extruded aluminum glazing stops of [square] [rounded and mitered] design, [permanently anchored on security side and removable on opposite side.]

E. Hardware:
   [1. Receive hardware supplied in accordance with Section 08710 and install in accordance with requirements of this Section.]
   2. Cut, reinforce, drill and tap frames and doors as required to receive hardware.
   3. Comply with hardware manufacturer's templates and instructions.
   4. Use concealed fasteners wherever possible.

F. Welding:
   1. Comply with recommendations of the American Welding Society.
   2. Use recommended electrodes and methods to avoid distortion and discoloration.
   3. Grind exposed welds smooth and flush with adjacent surfaces; restore mechanical finish.

G. Flashings: Form from sheet aluminum with same finish as extruded sections. Material thickness as required to suit condition without deflection or "oilcanning".

****

Select and edit following items for appropriate finish; delete inapplicable types. Oldcastle BuildingEnvelope® is a licensed applicator for all of the coating manufacturers listed below.

****

2.06 FINISHES

A. Organic Coating (high performance fluorocarbon):
   1. Comply with requirements of AAMA 2605.
   2. Surfaces cleaned and given conversion coating pre-treatment prior to application of 0.3 mil dry film thickness of epoxy or acrylic primer following recommendations of finish coat manufacturer.

****

Note: A less expensive finish coat containing a minimum of 50% fluorocarbon resin is also available, and meets AAMA 605.2, but with reduced performance over time.

****

   3. Finish coat of [50%] [70%] minimum fluorocarbon resin fused to primed surfaces at temperature recommended by manufacturer, 1.0 mil minimum dry film thickness.
   4. Acceptable coatings are Trinar by Akzo Coatings, Inc.; Nubelar by Glidden Company; Fluoroceram by Morton International, Inc.; Duranar by PPG Industries Inc.; and Fluropon by Valspar Corporation.
   5. Provide in either a 2, 3, or 4 coat system as required for color selected.
   6. [Custom colors as selected by Architect.]

***** OR *****

   [7. Manufacturer's standard colors as selected by Architect.]

***** OR *****

****

Oldcastle BuildingEnvelope® utilizes a computer driven anodizing system which produces the closest color

C. Acceptable Entrance Systems:

Standard duty systems (0.125" wall thickness; 1-3/4" deep)
Model 212 - narrow stile (4-1/2" bottom rail, 2-3/4" top rail, 1-5/8" verticals)

Note that standard duty systems are available with the VIP series panic mid rail device.

2.02 FRAMING MATERIALS AND ACCESSORIES

A. Aluminum:
1. ASTM B221, alloy 6063-T5 for extrusions; ASTM B209, alloy 5005-H16 for sheets; or other alloys and temper recommended by manufacturer appropriate for specified finish.

B. Internal Reinforcing:
1. ASTM A36 for carbon steel; or ASTM B308 for structural aluminum.
2. Shapes and sizes to suit installation.
3. Steel components factory coated with alkyd type zinc chromate primer complying with FS TT-P-645.

C. Anchorage Devices:
1. Manufacturer's standard formed or fabricated steel or aluminum assemblies of shapes, plates, bars or tubes.
2. Hot-dip galvanize steel assemblies after fabrication, comply with ASTM A123, 2.0 ounce minimum coating.

D. Fasteners:
1. Aluminum, non-magnetic stainless steel or other non-corrosive materials compatible with items being fastened.
2. Provide concealed fasteners wherever possible.
3. For exposed locations, provide Phillips flathead screws with finish matching item fastened.
4. For concealed locations, provide manufacturer's standard fasteners.

E. Expansion Anchor Devices: Lead-shield or toothed-steel, drilled-in, expansion bolt anchors.

F. Protective Coatings: Cold-applied asphalt mastic complying with SSPC-Paint 12, compounded for 30 mil thickness for each coat; or alkyd type zinc chromate primer complying with FS TT-P-645.

G. Touch-Up Primer for Galvanized Components: Zinc oxide conforming with FS TT-P-641.

H. Glazing Gaskets:
1. Compression type design, replaceable, molded or extruded, of neoprene, polyvinyl chloride (PVC), or ethylene propylene diene monomer (EPDM).
2. Profile and hardness as required to maintain uniform pressure for watertight seal.

I. Weatherstripping:
1. Wool pile conforming to AAMA 701.2.
2. Provide EPDM or vinyl blade gasket weatherstripping in bottom door rail, adjustable for contact with threshold.

2.03 GLASS AND GLAZING ACCESSORIES

A. Refer to Section 08 80 00.

****

Entrance manufacturer's standard hardware should be specified here and all other non-standard hardware can be specified here or in section 08 71 00 - Door Hardware. However, all hardware should be installed by storefront and entrance manufacturer. Coordinate requirements.

List each item of hardware to be furnished. Describe each item by giving manufacturer's name, catalog number, size, finish, and special features. Add, delete and edit as required.

****

range available.

[B. Clear Anodized:
1. Conforming to AA-M12C22A31 and AAMA 607.1.
2. Architectural Class II, etched, medium matte, clear anodic coating, 0.4 mil minimum thickness.]

***** OR *****

[C. Color Anodized:
1. Conforming to AA-M12C22A44 and AAMA 606.1 and 608.1.
2. Architectural Class [I] [II], etched, medium matte, [black] [dark bronze] [medium bronze] [light bronze] colored anodic coating, [0.7] [0.4] mil minimum thickness.]

PART 3 - EXECUTION

3.01 EXAMINATION
A. Examine conditions and proceed with Work in accordance with Section 01 40 00.

3.02 INSTALLATION
A. Erection Tolerances:
1. Limit variations from plumb and level:
a. 1/8 inch in 10'-0" vertically.
b. 1/8 inch in 20'-0" horizontally.
2. Limit variations from theoretical locations: 1/4 inch for any member at any location.
3. Limit offsets in theoretical end-to-end and edge-to-edge alignment: 1/16 inch from flush surfaces not more than 2 inches apart or out-of-flush by more than 1/4 inch.
B. Install doors and hardware in accordance with manufacturer's printed instructions.
C. Set units plumb, level and true to line, without warp or rack of frame.
D. Anchor securely in place, allowing for required movement, including expansion and contraction.
E. Separate dissimilar materials at contact points, including metal in contact with masonry or concrete surfaces, with bituminous paint or preformed separators to prevent contact and corrosion.
F. Set sill members in bed of sealant. Set other members with internal sealants and baffles to provide weathertight construction.
G. Coordinate installation of perimeter sealant and backing materials between assemblies and adjacent construction in accordance with requirements of Section 07 92 00.
H. Glazing: Refer to requirements of Section 08 80 00.

3.03 ADJUSTING
A. Test door operating functions. Adjust closing and latching speeds and other hardware in accordance with manufacturer's instructions to ensure smooth operation.

3.04 CLEANING
A. Clean surfaces in compliance with manufacturer's recommendations; remove excess mastic, mastic smears, foreign materials and other unsightly marks.
B. Clean metal surfaces exercising care to avoid damage.

END OF SECTION

ENERGY AND COMFORT

Ventilation Testing

VELOCICALC®
Air Velocity Meter
Model 9555 Series

Operation and Service Manual

TRUST. SCIENCE. INNOVATION.

Copyright©
TSI Incorporated / 2007-2008 / All rights reserved.

Address
TSI Incorporated / 500 Cardigan Road / Shoreview, MN 55126 / USA

Fax No.
(651) 490-3824

LIMITATION OF WARRANTY AND LIABILITY (effective July 2000)

Seller warrants the goods sold hereunder, under normal use and service as described in the operator's manual, shall be free from defects in workmanship and material for twenty-four (24) months, or the length of time specified in the operator's manual, from the date of shipment to the customer. This warranty period is inclusive of any statutory warranty. This limited warranty is subject to the following exclusions:

a. Hot-wire or hot-film sensors used with research anemometers, and certain other components when indicated in specifications, are warranted for 90 days from the date of shipment.
b. Parts repaired or replaced as a result of repair services are warranted to be free from defects in workmanship and material, under normal use, for 90 days from the date of shipment.
c. Seller does not provide any warranty on finished goods manufactured by others or on any fuses, batteries or other consumable materials. Only the original manufacturer's warranty applies.
d. Unless specifically authorized in a separate writing by Seller, Seller makes no warranty with respect to, and shall have no liability in connection with, goods which are incorporated into other products or equipment, or which are modified by any person other than Seller.

The foregoing is IN LIEU OF all other warranties and is subject to the LIMITATIONS stated herein. **NO OTHER EXPRESS OR IMPLIED WARRANTY OF FITNESS FOR PARTICULAR PURPOSE OR MERCHANTABILITY IS MADE.**

TO THE EXTENT PERMITTED BY LAW, THE EXCLUSIVE REMEDY OF THE USER OR BUYER, AND THE LIMIT OF SELLER'S LIABILITY FOR ANY AND ALL LOSSES, INJURIES, OR DAMAGES CONCERNING THE GOODS (INCLUDING CLAIMS BASED ON CONTRACT, NEGLIGENCE, TORT, STRICT LIABILITY OR OTHERWISE) SHALL BE THE RETURN OF GOODS TO SELLER AND THE REFUND OF THE PURCHASE PRICE, OR, AT THE OPTION OF SELLER, THE REPAIR OR REPLACEMENT OF THE GOODS. IN NO EVENT SHALL SELLER BE LIABLE FOR ANY SPECIAL, CONSEQUENTIAL OR INCIDENTAL DAMAGES. SELLER SHALL NOT BE RESPONSIBLE FOR INSTALLATION, DISMANTLING OR REINSTALLATION COSTS OR CHARGES. No Action, regardless of form, may be brought against Seller more than 12 months after a cause of action has accrued. The goods returned under warranty to Seller's factory shall be at Buyer's risk of loss, and will be returned, if at all, at Seller's risk of loss.

Buyer and all users are deemed to have accepted this LIMITATION OF WARRANTY AND LIABILITY, which contains the complete and exclusive limited warranty of Seller. This LIMITATION OF WARRANTY AND LIABILITY may not be amended, modified or its terms waived, except by writing signed by an Officer of Seller.

Service Policy

Knowing that inoperative or defective instruments are as detrimental to TSI as they are to our customers, our service policy is designed to give prompt attention to any problems. If any malfunction is discovered, please contact your nearest sales office or representative, or call Customer Service department at (800) 874-2811 (USA) or (1) 651-490-2811 (International).

CONTENTS

CHAPTER 1 UNPACKING AND PARTS IDENTIFICATION 1

CHAPTER 2 SETTING-UP 3
Supplying Power to the Model 9555 Series 3
Installing the Batteries 3
Using the Optional AC Adapter 3
Using The Telescoping Probe 3
Extending The Probe 3
Retracting The Probe 3
Connecting the Optional Bluetooth Portable Printer 4
Connecting to a Computer 4

CHAPTER 3 OPERATION 5
Keypad Functions 5
Common Terms 5
Menus 6
DISPLAY SETUP 6
PRESSURE ZERO 6
SETTINGS 6
FLOW SET UP 6
ACTUAL/STANDARD SETUP 7
DATA LOGGING 7
Measurements 7
Log Mode/Log Settings 7
Delete Data 8
% Memory 8
APPLICATIONS 8
Printing Data Using the Portable Printer 8
TRAKPRO™ Data Analysis Software 8

CHAPTER 4 MAINTENANCE 9
Recalibration 9
Cases 9
Storage 9

CHAPTER 5 TROUBLESHOOTING 11

APPENDIX A SPECIFICATIONS 13

APPENDIX B DIP SWITCH SETTINGS 17

Chapter 1

Unpacking and Parts Identification

Carefully unpack the instrument and accessories from the shipping container. Check the individual parts against the list of components below. If anything is missing or damaged, notify TSI immediately.

1. Carrying case
2. Instrument
3. Static pressure tip
4. Rubber tubing
5. USB cable
6. CD-ROM with downloading software
7. AC adapter

Chapter 2

Setting-up

Supplying Power to the Model 9555 Series

The Model 9555 VELOCICALC Air Velocity Meter can be powered in one of two ways: four size AA batteries or the AC adapter.

Installing the Batteries

Insert four AA batteries as indicated by the diagram located on the inside of the battery compartment. The Model 9555 is designed to operate with either alkaline or NiMH rechargeable batteries. Battery life will be shorter if NiMH batteries are used. If NiMH batteries are used the DIP switch will need to be changed. Refer to Appendix B, DIP Switch Settings. Carbon-zinc batteries are not recommended because of the danger of battery acid leakage.

Using the AC Adapter

When using the AC adapter, the batteries (if installed) will be bypassed. Be sure to provide the correct voltage and frequency, which is marked on the back of the AC adapter.

Using The Telescoping Probe

The telescoping probe contains the velocity, temperature, and humidity sensors. When using the probe, make sure the sensor window is fully exposed and the orientation dimple is facing upstream.

NOTE: *For temperature and humidity measurements, make sure that at least 3 inches (7.5 cm) of the probe is in the flow to allow the temperature and humidity sensors to be in the air stream.*

Extending The Probe

To extend the probe, hold the handle in one hand while pulling on the probe tip with the other hand. Do not hold the cable while extending the probe as this prevents the probe from extending.

Retracting The Probe

To retract the probe, hold the handle in one hand while gently pushing on the probe tip with the other hand. If you feel the probe antenna binding, pull gently on the probe cable until the smallest antenna section is retracted. Collapse the rest of the antenna by pressing the probe tip.

Connecting the Optional Bluetooth Portable Printer

To connect the Bluetooth printer to the Model 9555, power on the unit and the printer. Then select the MENU soft key. From the Menu use the ▲ and ▼ keys to highlight Discover Printer and press the ↵ key. If other TSI Bluetooth-printers are in the area, turn them off before searching. The Model 9555 will then search for and list all available Bluetooth devices. Select the device "Handy700".

If the Model 9555 has previously been connected to a TSI printer, then it should automatically reconnect to that printer.

If the printer prints question marks (??????), asterisks (******), or random characters, reset it by turning it off and then on again. If necessary, refer to the *Portable Printer Manual.*

Connecting to a Computer

Use the Computer Interface USB Cable provided with the Model 9555 to connect the instrument to a computer for downloading stored data or for remote polling. Connect the end labeled "COMPUTER" to the computer USB port and the other end to the data port of the Model 9555.

For more information on how to download stored data see Chapter 3 section titled TrakPro™ Data Analysis Software.

Caution: This symbol is used to indicate that the data port of the Model 9555 is **not** intended for connection to a public telecommunications network. Connect the USB data port only to another USB port.

Chapter 3

Operation

Keypad Functions

ON/OFF Key	Press to turn the Model 9555 on and off. During the power up sequence the display will show the following: Model Number, Serial Number, Software Revision and Last Date Calibrated.
Arrow (▲▼) Keys	Press to scroll through choices while setting a parameter. Pressing the ▲▼ keys simultaneously will lock the keypad to prevent unauthorized adjustments to the instruments. To unlock the keypad, press the ▲▼ keys simultaneously.
↵ (Enter) Key	Press to accept a value or condition.
Arrow (◄or ►) and Menu Soft Keys	Press arrow keys to change choices while setting a parameter. Press the Menu soft key to select the Menu selections, which are Display Setup, Pressure Zero, Settings, Flow Setup, Actual/Std Set up, Data Logging, Applications, Calibration and Printer.

Common Terms

In this manual there are several terms that are used in different places. The following is a brief explanation of the meanings of those terms.

Sample	Consists of all of the measurement parameters stored at the same time.
Test ID	A group of samples. The statistics (average, minimum, maximum, and count) are calculated for each test ID. The maximum number of test IDs is 100.

Time Constant	The time constant is an averaging period. It is used to dampen the display. If you are experiencing fluctuating flows, a longer time constant will slow down those fluctuations. The display will update every second, but the displayed reading will be the average over the last time constant period. For example, if the time constant is 10 seconds, the display will update every second, but the displayed reading will be the average from the last 10 seconds. This is also referred to as a "moving average".
Logging Interval	The logging interval is a frequency period that the instrument will log readings. For example, if the logging interval is set to 30 minutes, each sample will be the average of the last 30 minutes.

Menus

DISPLAY SETUP

Display setup menu is where you will setup the desired parameters to be displayed on the running screen. With a parameter highlighted you can then use the ON soft key to have it show up on the running screen or select the OFF soft key to turn off the parameter. Use PRIMARY soft key to have a parameter show up on the running screen in a larger display. Only one parameter can be selected as a primary, and up to 4 secondary parameters can be selected at one time.

PRESSURE ZERO

To zero the pressure reading, select the Pressure Zero menu. The instrument will indicate if the pressure zero was successful.

SETTINGS

Settings menu is where you can set the general settings. These include Language, Beeper, Select Units, Time Constant, Contrast, Set Time, Set Date, Time Format, Date Format, Number Format, Backlight and Auto Off. Use the ◄ or ► soft keys to adjust the settings for each option and use the ↵ key to accept settings.

FLOW SET UP

In Flow Setup mode, there are 5 types: Round Duct, Rectangle Duct, Duct Area, Horn and K-Factor. Use the ◄ or ► soft keys to scroll through the types and then press the ↵ key to accept the desired type. To change the value, highlight the Enter Settings option and press the ↵ key.

NOTE: The horn numbers are the models of the horns. For example, 100 refers to a horn model number AM 100. Only horns with Model numbers as follows can be used with this function: AM 100, AM 300, AM 600 and AM 1200. If a horn model number is chosen, the instrument will return to measuring mode and use a preprogrammed curve to calculate flow rate from velocity.

ACTUAL/STANDARD SETUP

Choose Actual/Standard measurements and parameters in the Act/Std Setup menu. Within this menu, the user can also select Standard Temperature, Standard Pressure and a source for the actual temperature. The Model 9555 measures the actual barometric pressure.

DATA LOGGING

Measurements

Measurements to be logged are independent of measurements on the display, and must therefore be selected under DATA LOGGING → Measurements.

Log Mode/Log Settings

You can set Log Mode to Manual, Auto-save, Cont-key, Cont-time, Program 1 or Program 2.

- Manual mode does not automatically save data, but instead prompts the user to save a sample.
- In Auto-save mode, the user manually takes samples that are automatically logged.
- In Cont-key mode, the user starts taking readings and logging by pressing the ↵ key. The instrument will continue taking measurements until the ↵ key is pressed again.
- In Cont-time mode, the user starts taking readings by pressing the ↵ key. The instrument will continue taking samples until a set period of time has passed.
- Auto-save, Cont-Key and Cont-time modes have the following additional Log Settings:

Mode	Log Settings
Auto-save	Log Interval
Cont-key	Log Interval
Cont-time	Log Interval
	Test Length

- Pressing the ▲▼ keys simultaneously will lock the keypad to prevent unauthorized adjustments to the instruments. To unlock the keypad, press the ▲▼ keys simultaneously.

Delete Data

Use this to delete all data, delete test or delete sample.

% Memory

This option displays the memory available. Delete All, under Delete Data, will clear memory and reset the memory available.

APPLICATIONS

You can choose Draft Rate, Heat flow, Turbulence and % Outside Air in the Applications menu. After choosing one of these applications, take measurements or enter data for each line.

Printing Data Using the Portable Printer

To print logged data, first enter the DATALOGGING menu. Then, use the CHOOSE TEST item to select the data to be printed. After the test is selected, use the VIEW STATS and VIEW SAMPLES items to select statistics or individual data points to view and print. After selecting VIEW STATS or VIEW SAMPLES, press the PRINT key to print the data.

TRAKPRO™ Data Analysis Software

The VELOCICALC Model 9555 comes with special software called TRAKPRO™ Data Analysis Software, which is designed to provide you with maximum flexibility and power. To install this software on your computer, follow the instructions on the label of the TRAKPRO software.

Follow the instructions on the label of the TRAKPRO software to install the software on your computer. TRAKPRO software contains a very comprehensive Help Function. This utility provides all the necessary information to guide you in all aspects of software operation. The software is shipped on a CD-ROM. Updates are available from the TSI website at http://software.tsi.com.

To download data from the Model 9555, connect the supplied computer interface USB cable to the Model 9555 and to a computer USB port. Any USB port from can be used.

Chapter 4

Maintenance

The Model 9555 requires very little maintenance to keep it performing well.

Recalibration

To maintain a high degree of accuracy in your measurements, we recommend that you return your Model 9555 to TSI for annual recalibration. Please contact one of TSI's offices or your local distributor to make service arrangements and to receive a Return Material Authorization (RMA) number. To fill out an online RMA form, visit TSI's website at http://service.tsi.com.

U.S. & International
TSI Incorporated
500 Cardigan Road
Shoreview MN 55126-3996
Tel: (800) 874-2811
(651) 490-2811
Fax: (651) 490-3824

The Model 9555 can also be recalibrated in the field using the CALIBRATION menu. These field adjustments are intended to make minor changes in calibration to match a user's calibration standards. The field adjustment is NOT intended as a complete calibration capability. For complete, multiple-point calibration and certification, the instrument must be returned to the factory.

Cases

If the instrument case or storage case needs cleaning, wipe it off with a soft cloth and isopropyl alcohol or a mild detergent. Never immerse the Model 9555. If the enclosure of the Model 9555 or the AC adapter becomes broken, it must be replaced immediately to prevent access to hazardous voltage.

Storage

Remove the batteries when storing the unit for more than one month to prevent damage due to battery leakage.

Chapter 5

Troubleshooting

Table 5-1 lists the symptoms, possible causes, and recommended solutions for common problems encountered with the Model 9555. If your symptom is not listed, or if none of the solutions solves your problem, please contact TSI.

Table 5-1: Troubleshooting the Model 9555

Symptom	Possible Causes	Corrective Action
No Display	Unit not turned on	Switch unit on.
	Low or dead batteries	Replace batteries or plug in AC adapter.
	Dirty battery contacts	Clean the battery contacts.
Velocity reading fluctuates unstable	Fluctuating flow	Reposition probe in less-turbulent flow or use longer time constant.
No response to keypad	Keypad locked out	Unlock keypad by pressing ▲▼ keys simultaneously.
Instrument Error message appears	Memory is full	Download data if desired, then DELETE ALL memory.
	Fault in instrument	Factory service required on instrument.
Probe Error message appears	Fault in probe	Factory service required on probe.

WARNING!

Remove the probe from excessive temperature immediately: excessive heat can damage the sensor. Operating temperature limits can be found in Appendix A, Specifications. The pressure sensor is protected from damage up to 7 psi (48 kPa or 360 mmHg). At higher pressure it can burst!

Appendix A

Specifications

Specifications are subject to change without notice.

Velocity (TA Probe):

Range:	0 to 9999 ft/min (0 to 50 m/s)
Accuracy[1&2]:	±3% of reading or ±3 ft/min (±0.015 m/s), whichever is greater
Resolution:	1 ft/min (0.01 m/s)

Velocity (Pitot Tube):

Range[3]:	250 to 15500 ft/min (1.27 to 78.7 m/s)
Accuracy[4]:	±1.5% at 2000 ft/min (10.16 m/s)
Resolution:	1 ft/min (0.01 m/s)

Duct Size:

Range:	1 to 500 inches in increments of 0.1 in. (2.5 to 1270 cm in increments of 0.1 cm)

Volumetric Flow Rate:

Range:	Actual range is a function of actual velocity, pressure, duct size, and K factor

Temperature (TA Probe):

Range:	14 to 140°F (-10 to 60°C)
Accuracy[5]:	±0.5°F (±0.3°C)
Resolution:	0.1°F (0.1°C)

Relative Humidity(TA Probe):

Range:	0 to 95% RH
Accuracy[6]:	±3% RH
Resolution:	0.1% RH

Wet Bulb Temperature (TA Probe):

Range:	40 to 140°F (5 to 60°C)
Resolution:	0.1°F (0.1°C)

Dew Point (TA Probe):

Range:	5 to 120°F (-15 to 49°C)
Resolution:	0.1°F (0.1°C)

Heat Flow (TA Probe):

Range:	Function of velocity, temperature, humidity, and barometric pressure
Measurements available:	Sensible heat flow, latent heat flow, total heat flow and sensible heat factor
Units measured:	BTU/hr, kW

Static / Differential Pressure:
Range[7]: -15 to +15 in. H_2O (-28.0 to +28.0 mm Hg, -3735 to +3735 Pa)
Accuracy: ±1% of reading ±0.005 in. H_2O (±1 Pa, ±0.01 mm Hg)
Resolution: 0.001 in. H_2O (0.1 Pa, 0.01 mm Hg)

Barometric Pressure:
Range: 20.36 to 36.648 in. Hg (517.15 to 930.87 mm Hg)
Accuracy: ±2% of reading

Instrument Temperature Range:
Operating (Electronics): 40 to 113°F (5 to 45°C)
Operating (Probe): 14 to 140°F (-10 to 60°C)
Storage: -4 to 140°F (-20 to 60°C)

Instrument Operating Conditions:
Altitude up to 4000 meters
Relative humidity up to 80% RH, non-condensing
Pollution degree 1 in accordance with IEC 664
Transient over voltage category II

Data Storage Capabilities:
Range: 26,500+ samples and 100 test IDs (one sample can contain fourteen measurement types)

Logging Interval:
Intervals: 1 second to 1 hour

Time Constant:
Intervals: User selectable

Response Time:
Velocity: 200 msec
Temperature: 2 minutes (to 66% of final value)
Pressure: 0.1 msec
Humidity: <1 minute (to 66% of final value)

External Meter Dimensions:
3.8 in. × 8.3 in. × 2.1 in. (9.7 cm × 21.1 cm × 5.3 cm)

Meter Probe Dimensions:
Probe length: 40 in. (101.6 cm)
Probe diameter of tip: 0.28 in. (7.0 mm)
Probe diameter of base: 0.51 in. (13.0 mm)

Articulating Probe Dimensions:
Articulating section length: 6.0 in. (15.24 cm)
Diameter of articulating knuckle: 0.38 in. (9.5 mm)

Meter Weight:
Weight with batteries: 0.8 lbs (0.36 kg)

Power Requirements:
Four AA-size batteries (included) or AC adapter (optional) 7.2 VDC, 300 mA, 4-18 watts (input voltage and frequency vary depending on which adapter is used)

1 Temperature compensated over an air temperature range of 40 to 150°F (5 to 65°C).

2 The accuracy statement of ±3.0% of reading or ±3 ft/min (±0.015 m/s), whichever is greater, begins at 30 ft/min through 9999 ft/min (0.15 m/s through 50 m/s).

3 Pressure velocity measurements are not recommended below 1000 ft/min (5 m/s) and are best suited to velocities over 2000 ft/min. Range can vary depending on barometric pressure.

4 Accuracy is a function of converting pressure to velocity. Conversion accuracy improves when actual pressure values increase.

5 Accuracy with instrument case at 77°F (25°C), add uncertainty of 0.05°F/°F (0.03°C/°C) for change in instrument temperature.

6 Accuracy with probe at 77°F (25°C). Add uncertainty of 0.1% RH/°F (0.2% RH/°C) for change in probe temperature. Includes 1% hysteresis.

7 Overpressure range = 190 in. H_2O (7 psi , 360 mmHg, 48 kPa).

Appendix B

DIP Switch Settings

To access the DIP switch, remove the batteries from the battery compartment. On the inside of the battery compartment, there is a window with a single DIP switch (see Figure B-1). The table below shows the functions for the switch.

Caution: Make certain that power is turned off before changing the DIP switch settings.

Switch	Function	Settings
1	NiMH	OFF: Alkaline Batteries ON: NiMH Rechargeable Batteries

Figure B-1: DIP Switch Location

TSI Incorporated – 500 Cardigan Road, Shoreview, MN 55126 U.S.A

USA	**Tel:** +1 800 874 2811	**E-mail:** info@tsi.com	**Website:** www.tsi.com
UK	**Tel:** +44 149 4 459200	**E-mail:** tsiuk@tsi.com	**Website:** www.tsiinc.co.uk
France	**Tel:** +33 491 95 21 90	**E-mail:** tsifrance@tsi.com	**Website:** www.tsiinc.fr
Germany	**Tel:** +49 241 523030	**E-mail:** tsigmbh@tsi.com	**Website**: www.tsiinc.de
India	**Tel:** +91 80 41132470	**E-mail:** tsi-india@tsi.com	
China	**Tel:** +86 10 8260 1595	**E-mail:** tsibeijing@tsi.com	

Contact your local TSI Distributor or visit our website **www.tsi.com** for more detailed specifications.

P/N 1980565 Rev F Copyright © 2008 by TSI Incorporated Printed in U.S.A.

VAISALA

www.vaisala.com

Vaisala INTERCAP® Humidity and Temperature Probe HMP60

The HMP60 for extreme conditions.

Features/Benefits

- Miniature-size humidity probe
- Low power consumption
- Measurement range: 0 ... 100 %RH; -40 ... +60°C
- Cable detachable with standard M8 connector
- Rugged metal housing
- Interchangeable Vaisala INTERCAP® Sensor
- Optional RS485 digital output

  Optional dew point output
- Applications: volume applications, integration into other manufacturers' equipment, glove boxes, greenhouses, fermentation chambers, data loggers

HMP60

The HMP60 is a simple, durable and cost-effective humidity probe. It is suitable for volume applications, integration into other manufacturers' equipment, incubators, glove boxes, greenhouses, fermentation chambers, and data loggers.

Easy Installation

The probe cable has a screw-on quick connector for easy installation. Different cable lengths are available. Also other compatible M8 series cables can be used. Accessories are available for different installation needs.

Low Current Consumption

The HMP60 is suitable for battery-powered applications because of its very low current consumption.

Several Outputs

There are two configurable voltage outputs with relative humidity, temperature or dew point scaling. Four voltage output ranges are available.

Rugged Design

The HMP60 is designed for extreme conditions. The stainless steel body of the HMP60 is classified as IP65. The probe has a sealed structure and the sensor is protected by a membrane filter and a plastic grid, or optionally by a stainless steel filter.

Recalibration Not Needed

The Vaisala INTERCAP® Sensor is interchangeable. No recalibration is required; the sensor can simply be replaced, also in the field.

WindSonic™
SDI-12

Wind Speed & Direction Sensor

GILL

Key Features

- **Low Power Operation <2mA**
- **Rolling Average Facility**
- **SDI-12 V1.3 Compatible**
- **Multiple Sensors (Maximum 10)**
- **Solid State – Maintenance Free**
- **2 Year Warranty**
- **Corrosion Free**

The WindSonic™ SDI-12 is a low cost anemometer, utilising Gill's proven ultrasonic technology to provide wind speed and direction data via an SDI-12 output. New features include lower power consumption <2mA in standby and a vector or scalar rolling average feature providing 1min average and 1 min max speed with associated direction.

With a robust, corrosion-free polycarbonate housing, this small, lightweight wind sensor is particularly suited to meteorological and hydrological based installations. The WindSonic™ has no moving parts, offering maintenance-free operation in a wide range of applications.

WIND SPEED

Range	0 - 60 m/s (116 knots)
Accuracy	±2% @12 m/s
Resolution	0.01 m/s (0.02 knots)
Response Time	0.25 seconds
Threshold	0.01 m/s

DIRECTION

Range	0 - 359° (No dead band)
Accuracy	±2° @12 m/s
Resolution	1°
Response Time	0.25 seconds

MEASUREMENT

Update rate (for polling)	1 Hz
Parameters	Wind Speed & Direction or U and V (vectors)
Units of Measure	m/s

OUTPUTS

Output type	SDI-12 (refer to manual for technical specification) SDI-12 v 1.3
Baud Rate	1200
Anemometer Status	Supplied as part of standard message

AVERAGING

Rolling Average (normal power operation only)	1 Min Vector or 1 Min Scalar
	1 Min Maximum Speed & Direction

POWER REQUIREMENT

Anemometer (polled at 1Hz)	<2 mA @12 V - Low power operation
	<10 mA @12 V - Normal power operation

MECHANICAL

External Construction	LURAN S KR 2861/1C ASA/PC
Size	142mm x 163mm
Weight	0.5kg

ENVIRONMENTAL

Protection Class	IP66
OperatingTemperature	-35°C to +70°C
Storage Temperature	-40°C to +80°C
Operating Humidity	< 5% to 100% RH
EMC	EN 61326: 1998

OPERATIONAL

MTBF	15 years
Warranty	2 years
Factory Calibration	Traceable to National Standards

ACCESSORIES

Pipe Mounting	44.45mm (1.75") dia x 500mm length
Cables	Available to match output options

Typical Applications

- Remote weather monitoring stations
- Environmental field sites
- Agricultural Met
- Pollution Control
- Utilities
- Hydrological
- HVAC
- Environmental Protection

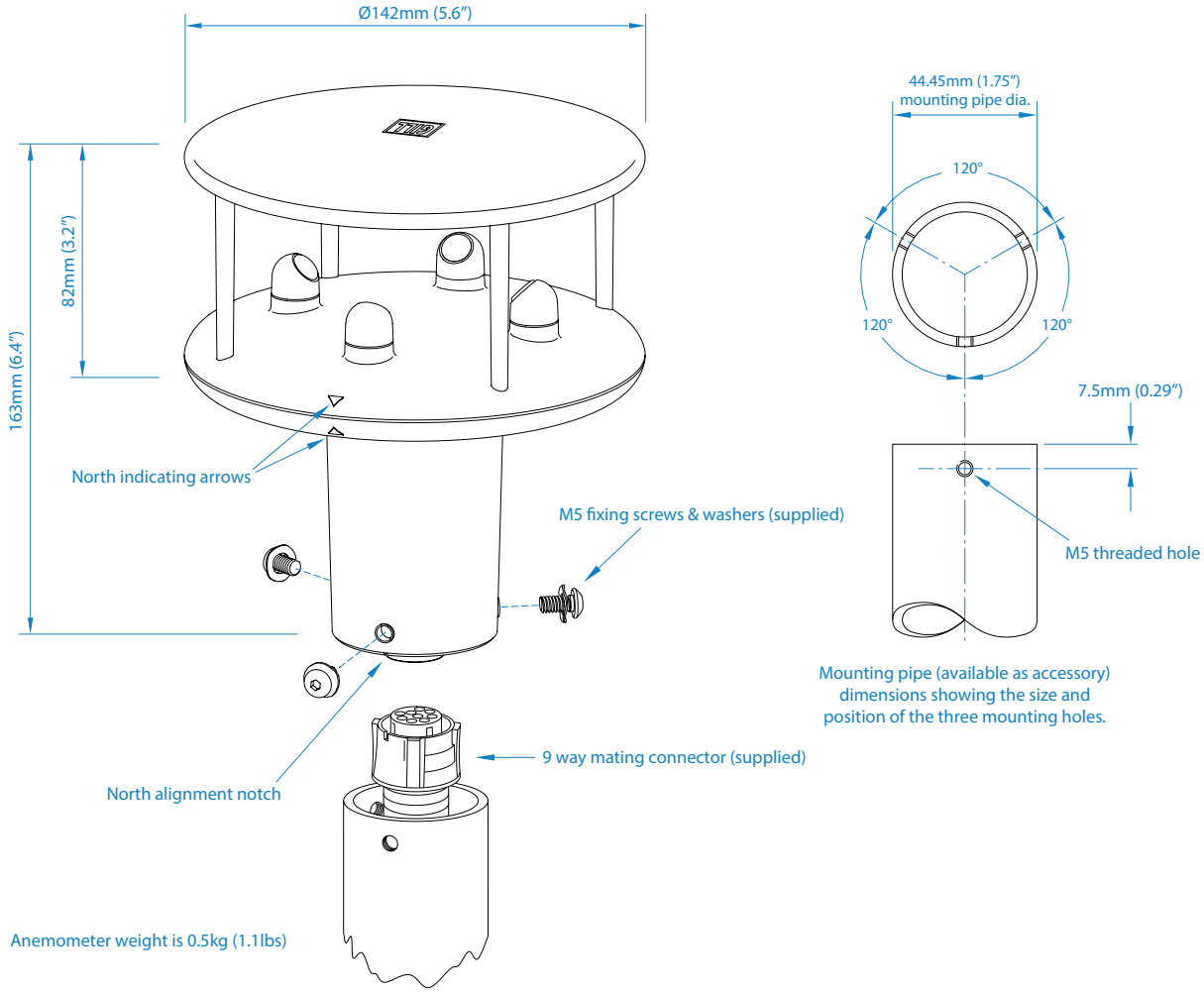

This product is in continuous development and therefore specifications may be subject to change without prior notice.

Gill Instruments

Saltmarsh Park, 67 Gosport Street
Lymington, Hampshire SO41 9EG
United Kingdom

Tel: +44 (0) 1590 613 500
Fax: +44 (0) 1590 613 501
info@gillinstruments.com

www.gillinstruments.com

1405-0028 Iss 2

Copyright © Gill Instruments 2014

Gill Instruments Ltd, Reg No. 2281574
Registered Office: The George Business Centre, Christchurch Road, New Milton, BH25 6QJ

Technical Data

Performance

RELATIVE HUMIDITY	
Measurement range	0 ... 100 %RH
Typical accuracy	
temperature range	0 ... +40 °C
0 ... 90 %RH	±3 %RH
90 ... 100 %RH	±5 %RH
temperature range	-40 ... 0 °C, +40 ... +60 °C
0 ... 90 %RH	±5 %RH
90 ... 100 %RH	±7 %RH
Humidity sensor	Vaisala INTERCAP®
TEMPERATURE	
Measurement range	-40 ... +60 °C
Accuracy over temperature range	
+10 ... +30 °C	±0.5 °C
-40 ... +10, +30 ... +60 °C	±0.6 °C
DEW POINT	
Measurement range	-40 ... +60 °C
Typical accuracy	
temperature range	0 ... +40 °C
when dew point depression < 15 °C	±2 °C
temperature range	-40 ... 0 °C, +40 ... +60 °C
when dew point depression < 10 °C	±3 °C
dew point depression = ambient temperature - dew point	
ANALOG OUTPUTS	
Accuracy at 20 °C	±0.2 % of FS
Temperature dependence	±0.01 % of FS/°C

Inputs and Outputs

Operating voltage (Use lowest available operating voltage to minimize heating.)	5 ... 28 VDC / 8 ... 28 VDC with 5 V output 8 ... 28VDC with loop power converter
Current consumption	1 mA average, max. peak 5 mA
Start-up time	
probes with analog output	4 s at operating voltage 13.5 ... 16.5 VDC 2 s at other valid operating voltages
probes with digital output	1 s
Outputs	
2 channels	0 ... 1 VDC/0 ... 2.5 VDC / 0 ... 5 VDC/1 ... 5 VDC
1-channel loop-power converter (separate module, compatible with humidity accuracy only)	4 ... 20 mA
digital output (optional)	RS485 2-wire half duplex
External loads	
0 ... 1 V	R_L min 10 kΩ
0 ... 2.5 V /0 ... 5 V	R_L min 50 kΩ

Operating Environment

Operating temperature	-40 ... +60 °C
Electromagnetic compatibility	EN 61326-1: Electrical equipment for measurement, control and laboratory use – EMC requirements – for use in industrial locations.

Mechanics

Materials	
body	stainless steel (AISI 316)
grid filter	chrome coated ABS plastic
cable	polyurethane or FEP
Housing classification	IP65
Body thread	MI2x1 / 10 mm
Cable connector	4-pin M8 (IEC 60947-5-2)
Weight	
probe	17 g
probe with 0.3 m cable	28 g

Options and Accessories

Vaisala INTERCAP® Sensor, 1 piece	15778HM
Vaisala INTERCAP® Sensor, 10 pcs	INTERCAPSET-10PCS
Sensor protection	
plastic grid	DRW010522
membrane filter	DRW010525
stainless steel sintered filter	HM46670SP
4 ... 20mA loop power converter	UI-CONVERTER-1CB
Mounting bracket for converter	225979
Plastic M12 installation nuts, pair	18350SP
USB cable for PC connection	219690
Probe mounting clamp set, 10 pcs	226067
Probe mounting flange	226061
Connection cables	
0.3 m PU	HMP50Z032SP
3 m PU	HMP50Z300SP
180 °C 3 m FEP	226902SP

Dimensions

in mm (inches)

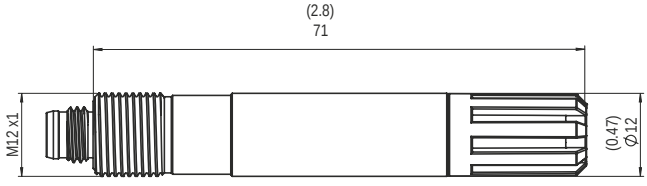

VAISALA

Please contact us at
www.vaisala.com/requestinfo

www.vaisala.com

Scan the code for more information

Ref. B210851EN-D ©Vaisala 2014
This material is subject to copyright protection, with all copyrights retained by Vaisala and its individual partners. All rights reserved. Any logos and/or product names are trademarks of Vaisala or its individual partners. The reproduction, transfer, distribution or storage of information contained in this brochure in any form without the prior written consent of Vaisala is strictly prohibited. All specifications — technical included — are subject to change without notice.

Andersen WINDOWS • DOORS

Electric Operator with PowerAssist™ Technology Application and Programming Guide

for Andersen® A-Series Awning and Venting Transom Windows and 400 Series Awning Windows

Limited Publication Release

Table of Contents /

Application

New Construction (For Electric Operator Ready Windows) 4-10

Existing Construction (For Electric Operator Ready Windows) 11-18

Unit Preparation for Retrofit Applications

A-Series Windows (Manufactured Before June 2013) 19-23

A-Series Windows (Manufactured After June 2013) 24-27

400 Series Windows 28-31

Programming

Console Programming 32-34

Remote Control Programming (Single Window Function and/or Multiple Window Function) 35-38

Console and Remote Control Operation 39

Manual Closing Procedure 40

Wiring

Wiring Diagram 41

Wire Gauge Chart 42

Home Automation Programming (RS485 Connection) 43-48

Operation Codes 49

Trouble Shooting 50-53

Regulatory Compliance. 54

Warranty 55-56

Electric Operator with PowerAssist™ Technology Application Guide

for Andersen® A-Series Awning and Venting Transom and 400 Series Awning Windows

Thank you for choosing Andersen.

For questions call 1-888-888-7020. For more information and/or guides visit andersenwindows.com.

Please leave this guide with building owner.

► ***Read guide from beginning to end before starting installation. Read all warnings and cautions during unit installation.***

► ***Check with your local building code official to identify and confirm compliance with local building code requirements.***

Parts Included

(1) Electric Operator
(1) Wire Harness
(4) 1-1/2" Pan Head Screw
(1) Power Box & Components / Battery

(1) Console
(1) Mounting Ring
(7) 1/2" Pan Head Screw
(1) Instruction Guide
(1) Hardware Pack

Tools Needed

- Safety glasses
- Tape measure
- Drill/Driver
- Wire Cutter
- Wire Stripper
- Finish/Paint Brush
- Phillips Head Screw Driver
- 3/8" Spade Bit
- 3/32" Drill Bit
- Utility Knife
- Pencil
- Paper Clip
- Drywall Saw
- Vice Grip

Additional Andersen® Parts Required/

(1) Sill Cover

Supplies Needed / Supplies Needed

- Finish Materials
- 18-3 Conductor Wire
- 14-2(min) High Voltage Wire
- 1-5/8" Drywall Screws
- Outlet Box Cable Clamps
- Wire Staples
- Wire Nuts

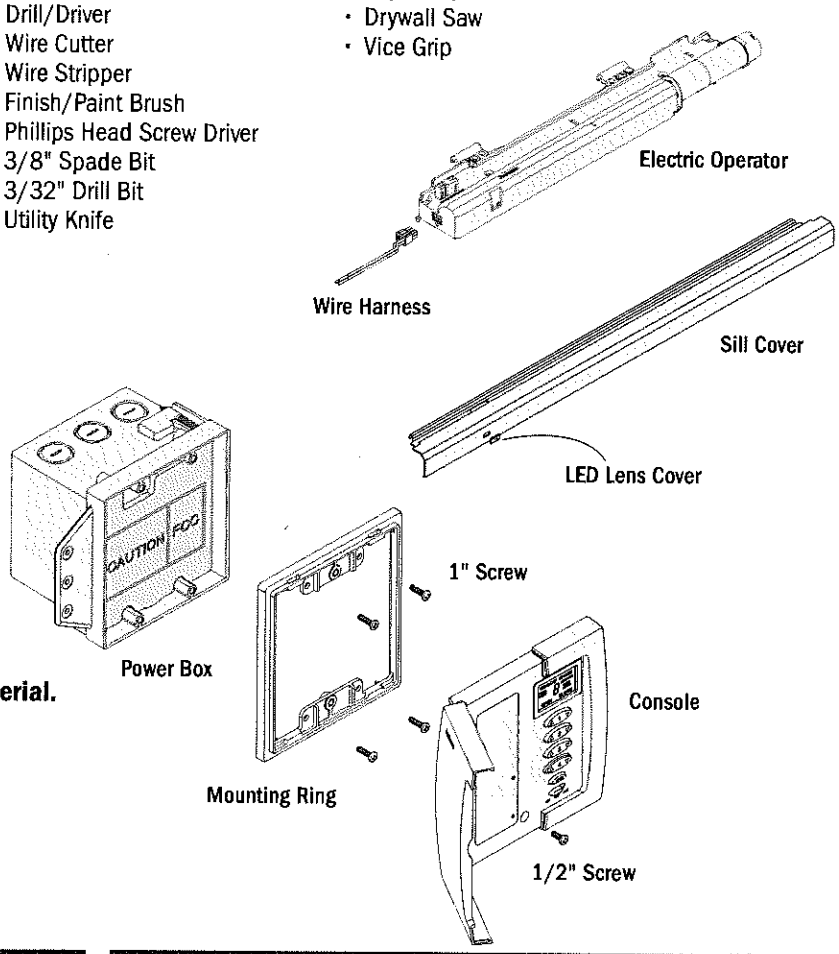

► **Finish sill cover prior to application procedure following finishing product instructions and warnings on finish material.**

► **For application in new construction, go to page 4.**

► **For application in existing construction, go to page 11.**

⚠ WARNING

Use caution when working at elevated heights and around unit openings. Follow manufacturers' instructions for ladders and/or scaffolding. Failure to do so may result in injury or death.

⚠ WARNING

Follow manufacturers' instructions for hand or power tools. Always wear safety glasses. Failure to do so may result in injury and/or product damage.

"Andersen" and all other marks where denoted are trademarks of Andersen Corporation. ©2013 Andersen Corporation. All rights reserved.

9068150 BA Revised 05/20/13

Application in New Construction (For Electric Operator Ready Windows)

- **See wiring diagram for proper wire configuration prior to starting.**

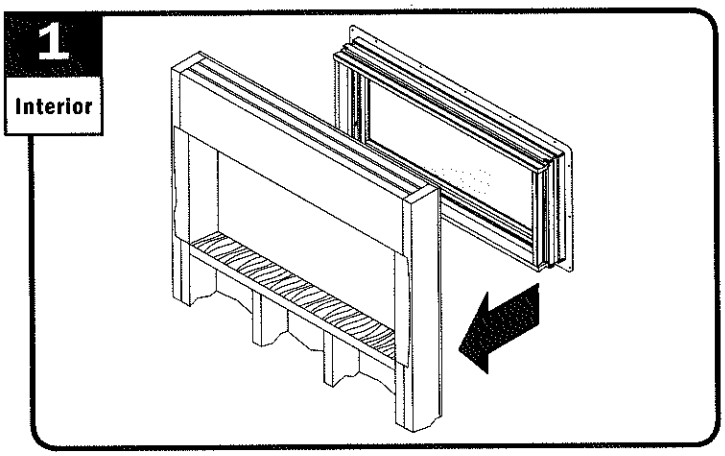

Install window following installation instructions.

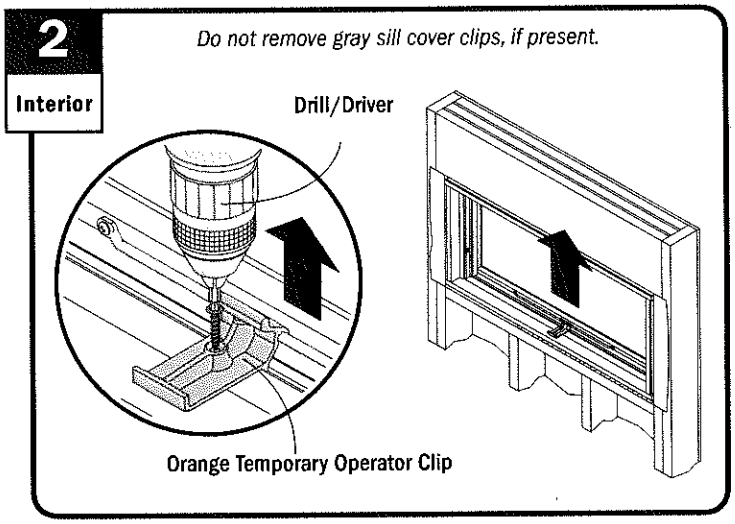

Remove orange temporary operator clip and dispose of properly.

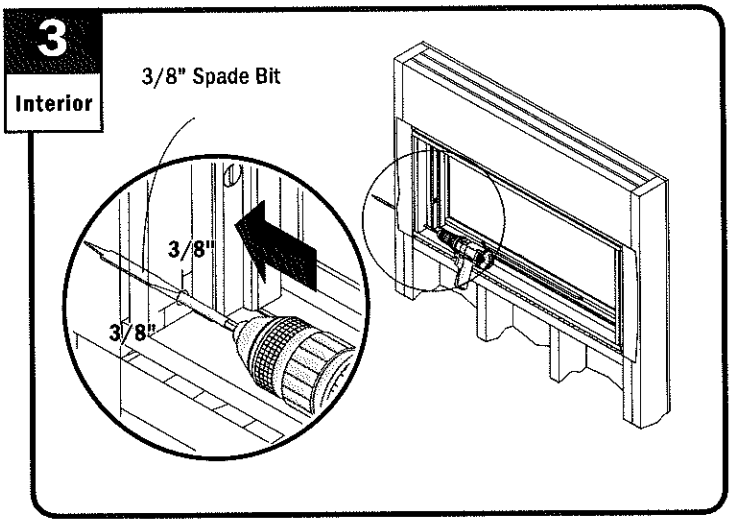

Drill 3/8" hole through side extension jamb and framing stud as shown.

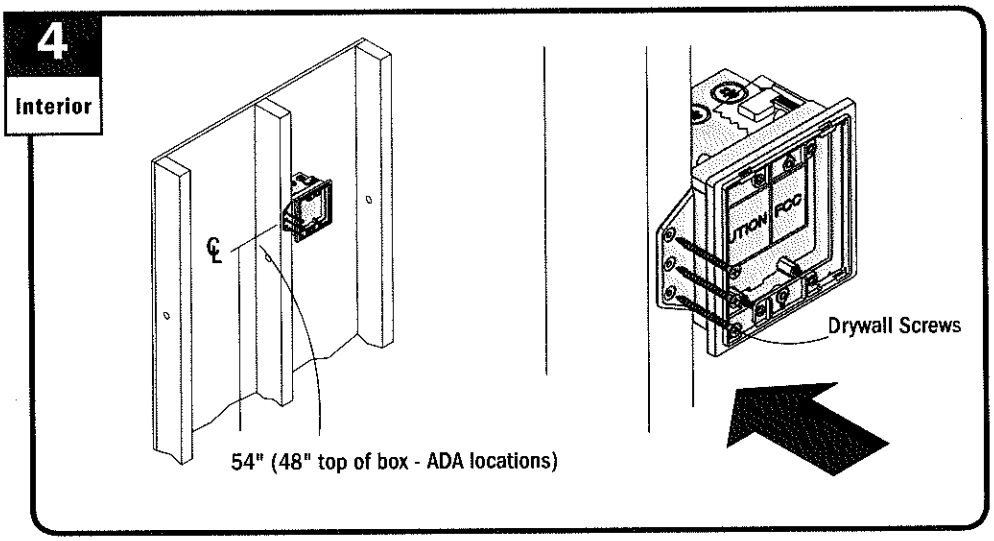

Locate center of power box on interior wall 54" above floor (48" top of box - ADA locations). Attach box to stud using three drywall screws. (See wire gauge chart for maximum run length).

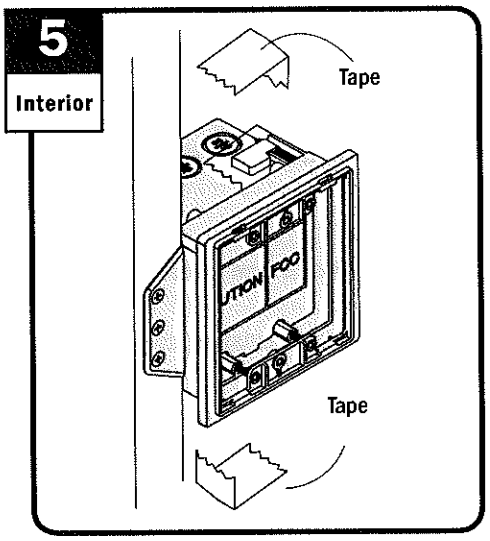

Remove tape from power box.

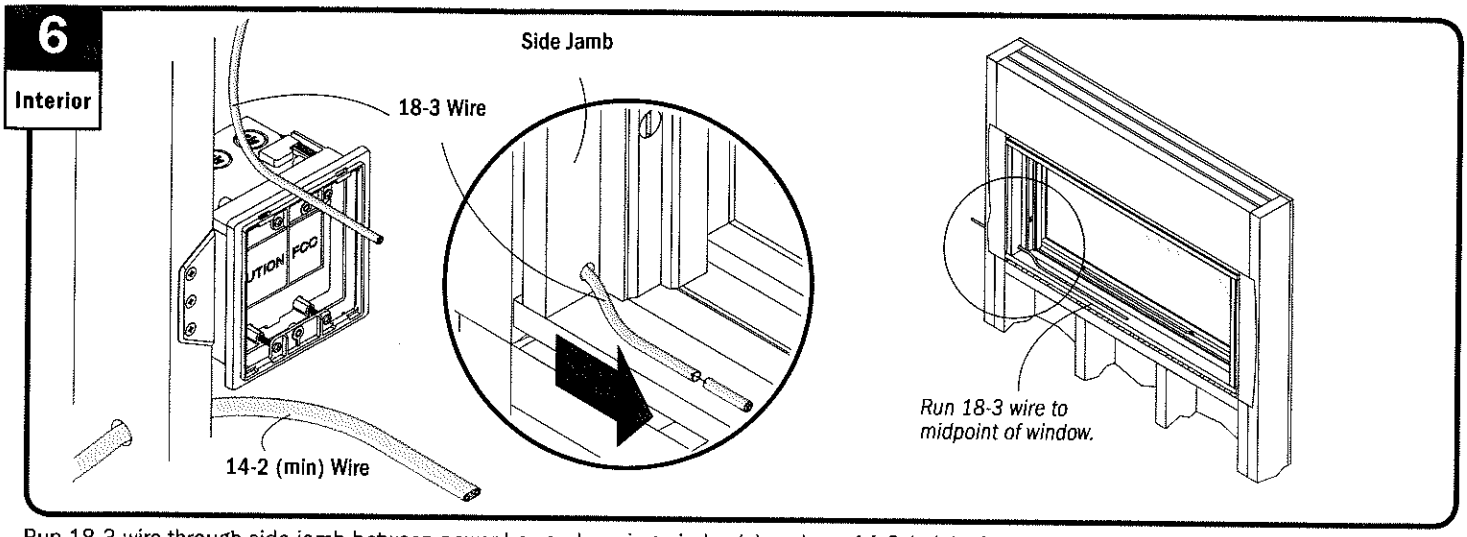

Run 18-3 wire through side jamb between power box and awning window(s) and run 14-2 (min) wire to power box location.

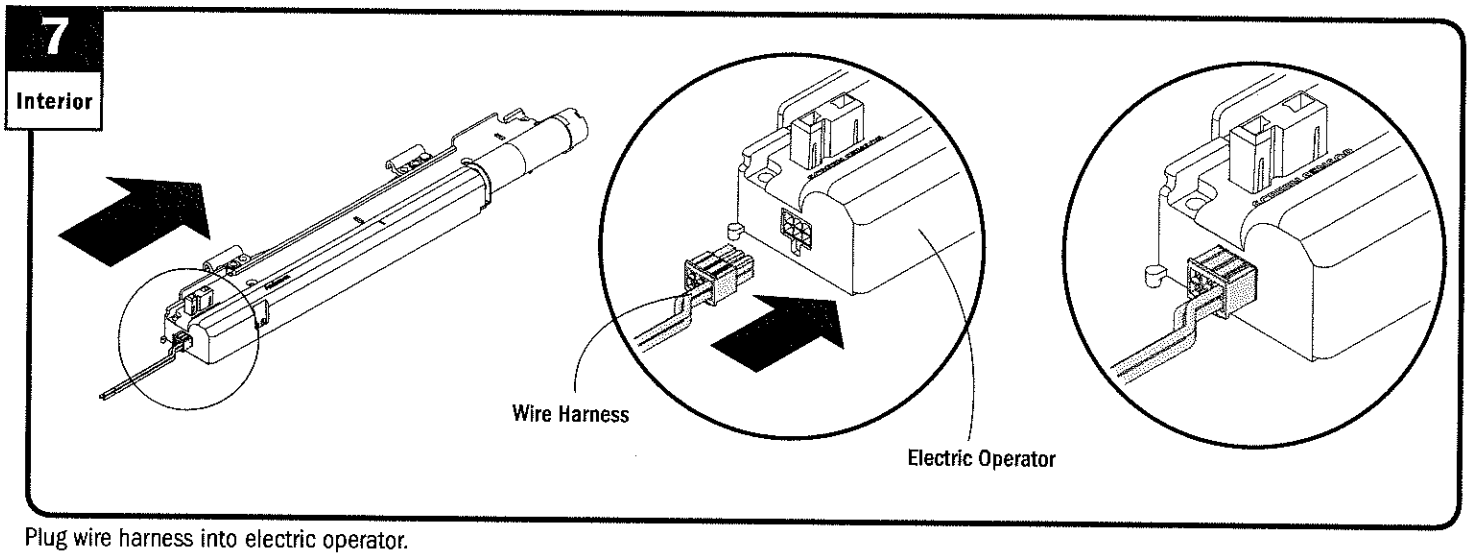

Plug wire harness into electric operator.

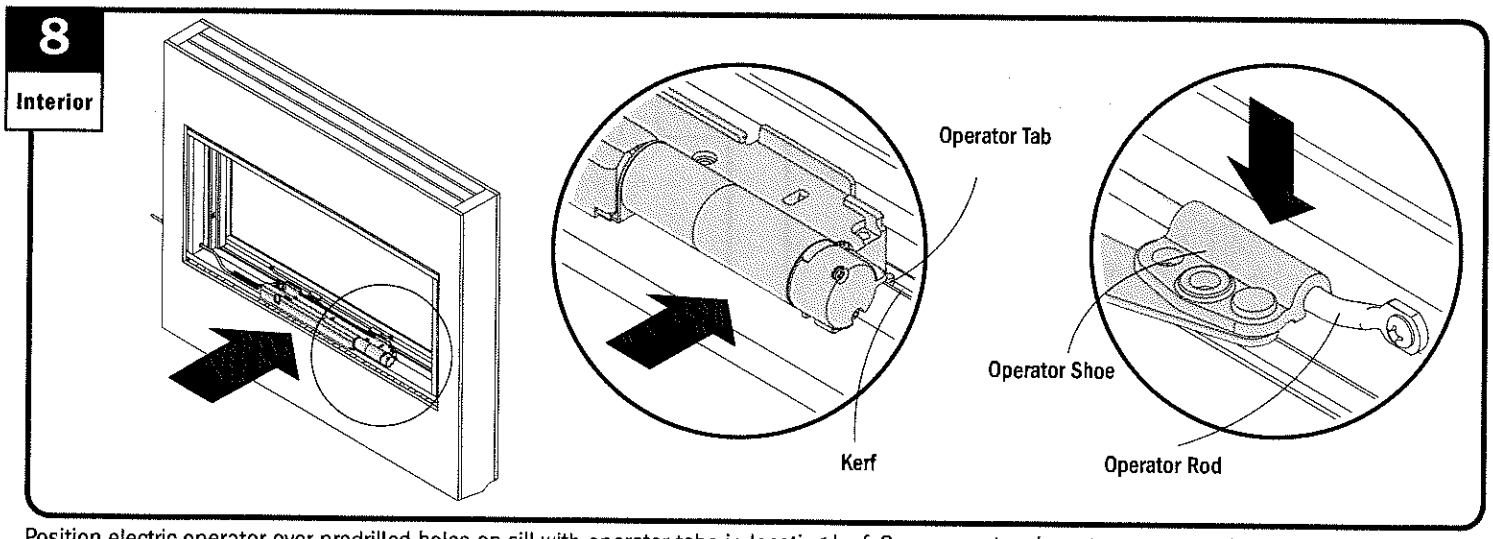

Position electric operator over predrilled holes on sill with operator tabs in locating kerf. Snap operator shoes to operator rod on sash.

9
Interior

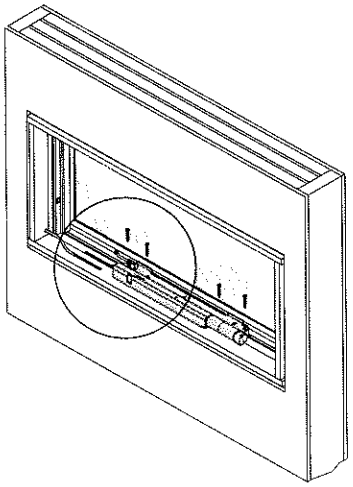

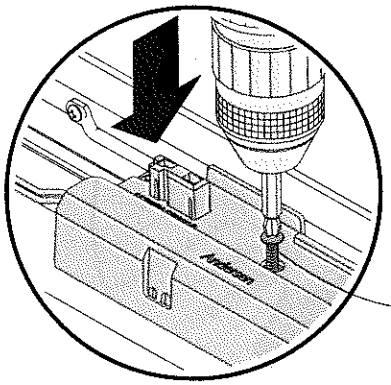

CAUTION

Do not over drive screws. Product damage may result.

Fasten electric operator with four (4) 1-1/2" pan head screws.

10
Interior

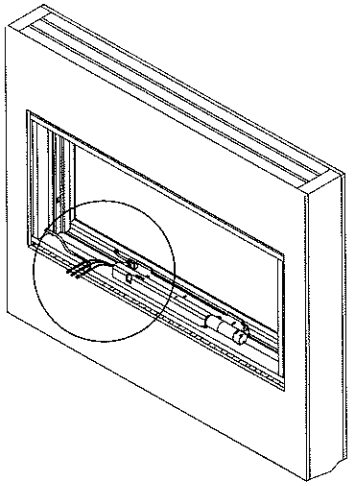

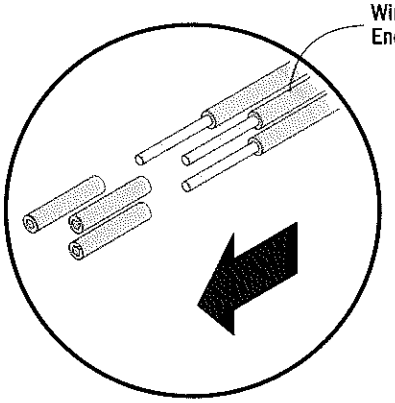

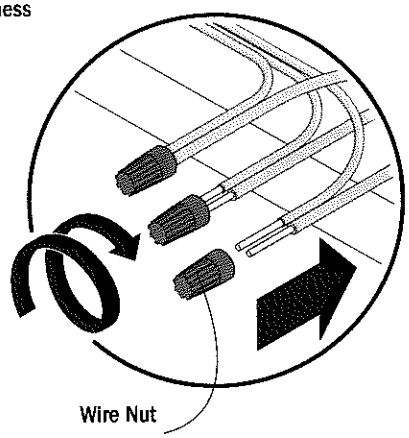

Strip wire harness ends and align same color wires with 18-3 wires and connect with wire nuts. Make sure wire color continuity is maintained.

11
Interior

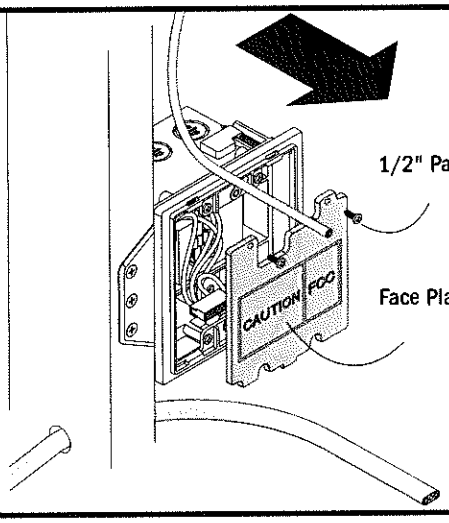

Remove two (2) 1/2" pan head screws and face plate and save for reuse.

12
Interior

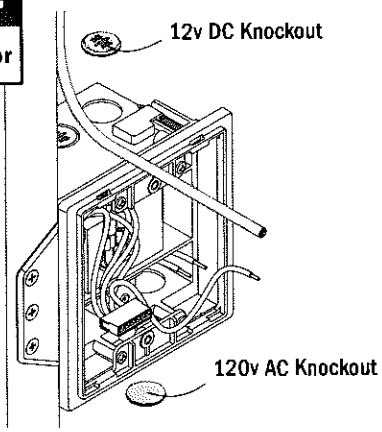

CAUTION

Do not damage internal box components when removing knockouts

Remove wiring access hole knockouts and dispose of properly.

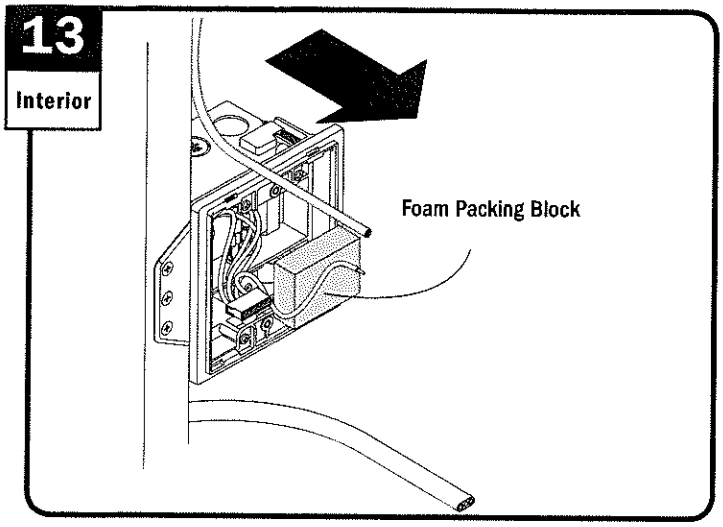

Remove foam packing block from power box and dispose of properly.

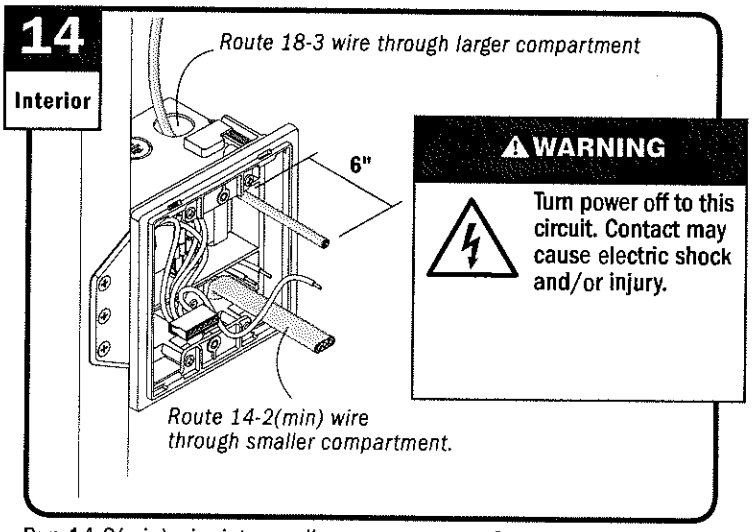

Run 14-2(min) wire into smaller compartment of power box and 18-3 wire into larger compartment of power box. See wiring diagram.

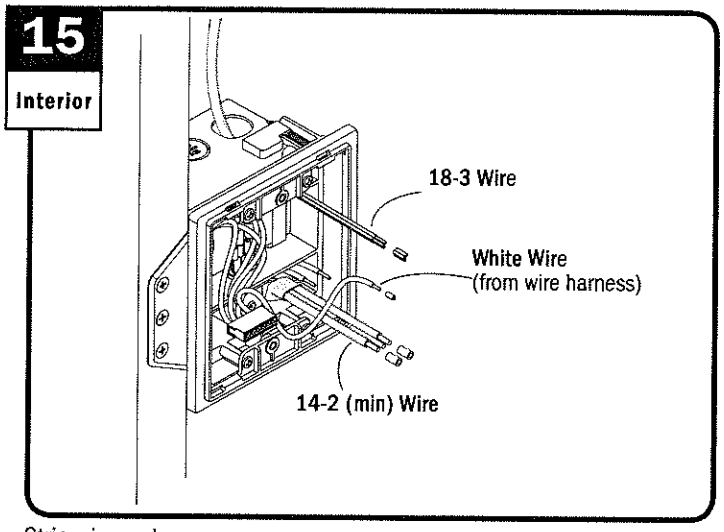

Strip wire ends.

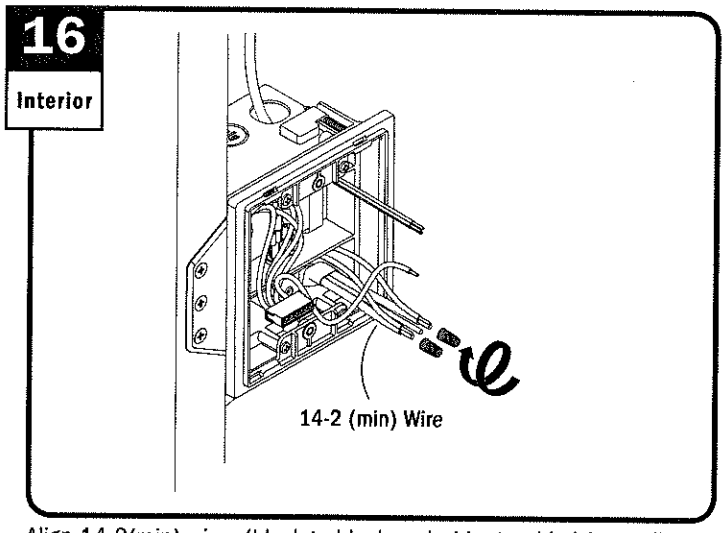

Align 14-2(min) wires (black to black and white to white) in smaller compartment of power box and connect with wire nuts.

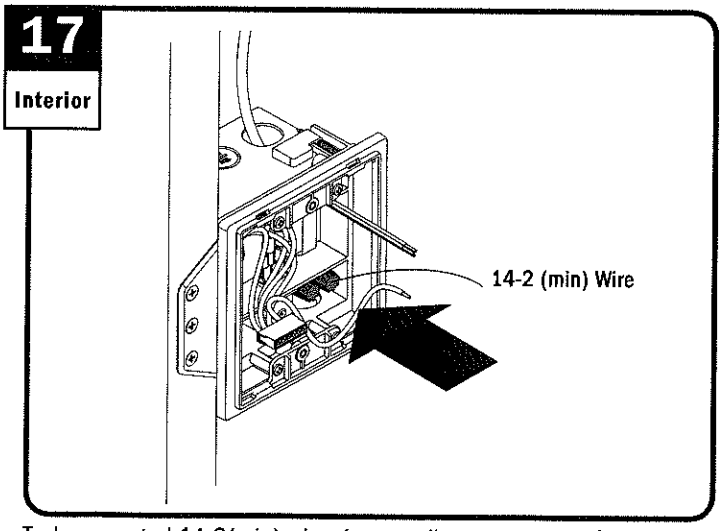

Tuck connected 14-2(min) wires into small compartment of power box, as shown.

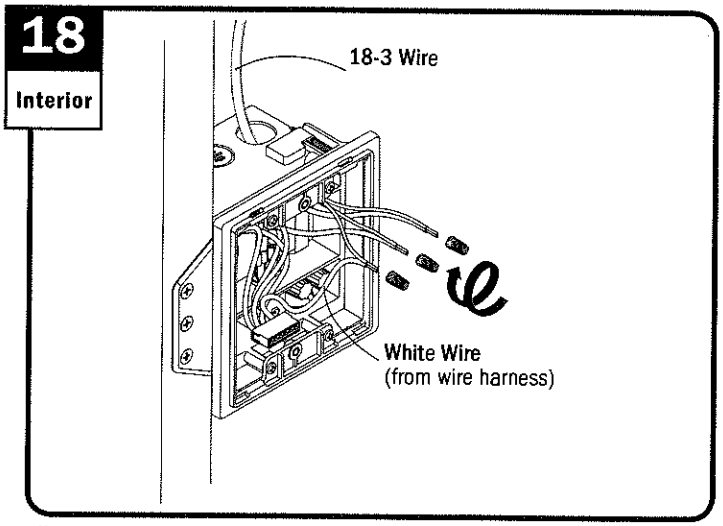

Align colored 18-3 wires to same colored wires in larger compartment and connect with wire nuts.

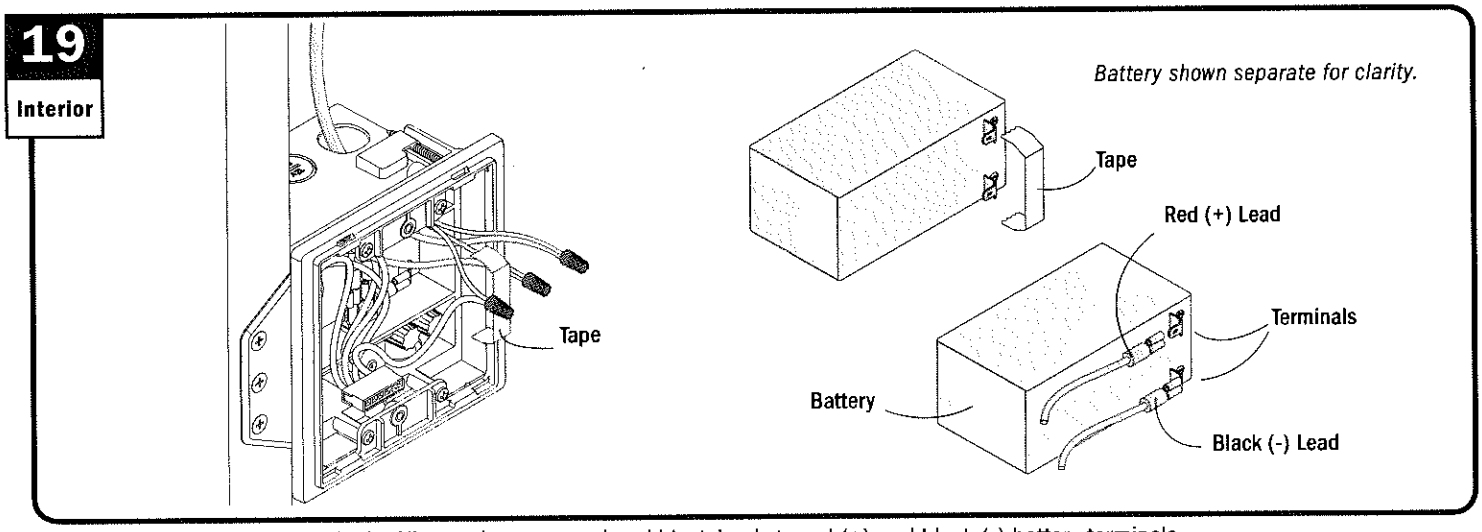

Remove tape from battery terminals. Align and connect red and black leads to red (+) and black (-) battery terminals.

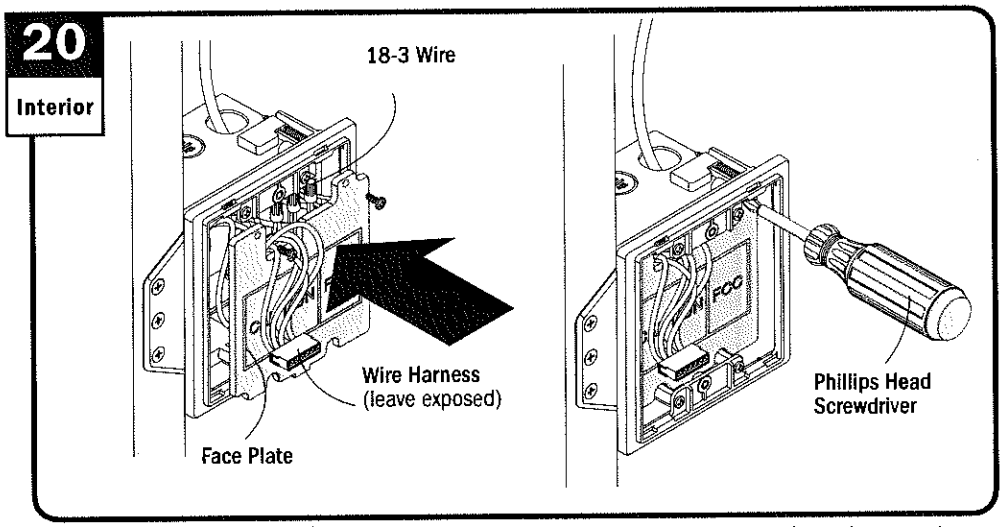

Tuck connected 18-3 wires into large compartment of power box and reapply face plate, as shown.

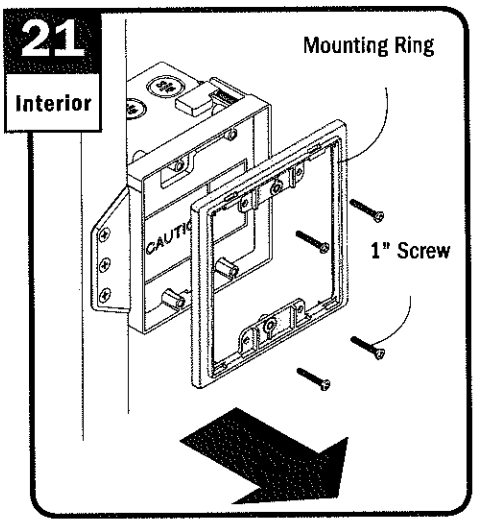

Remove mounting ring and screws from power box and save for reuse.

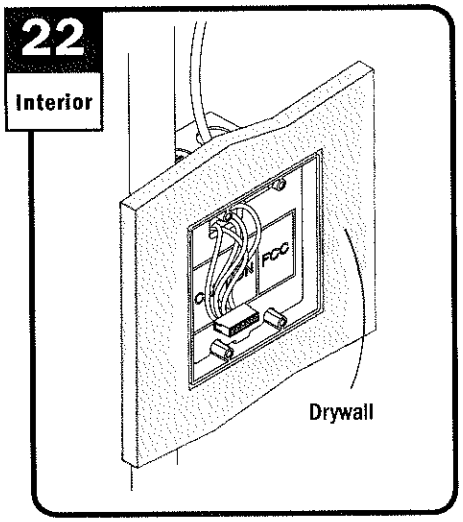

Install drywall.

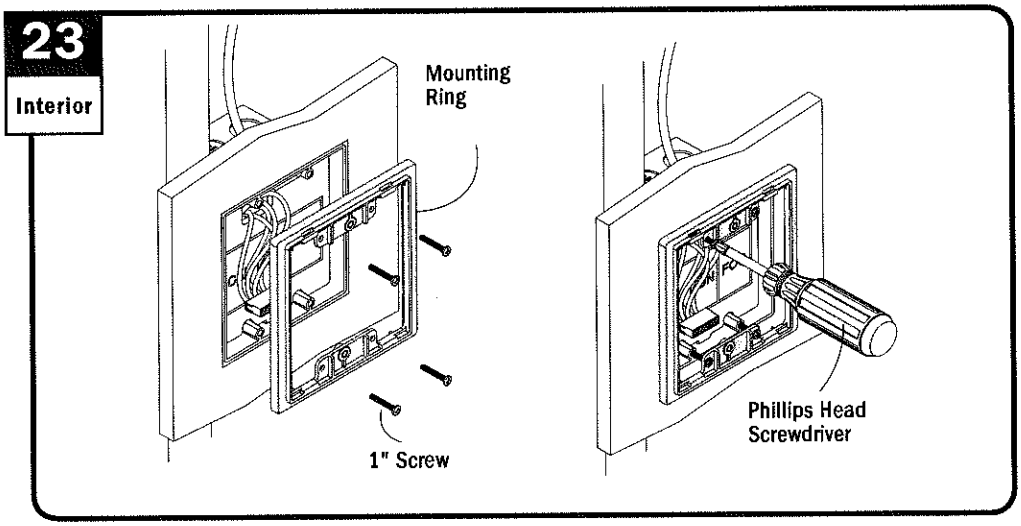

Reapply mounting ring and fasten with screws.

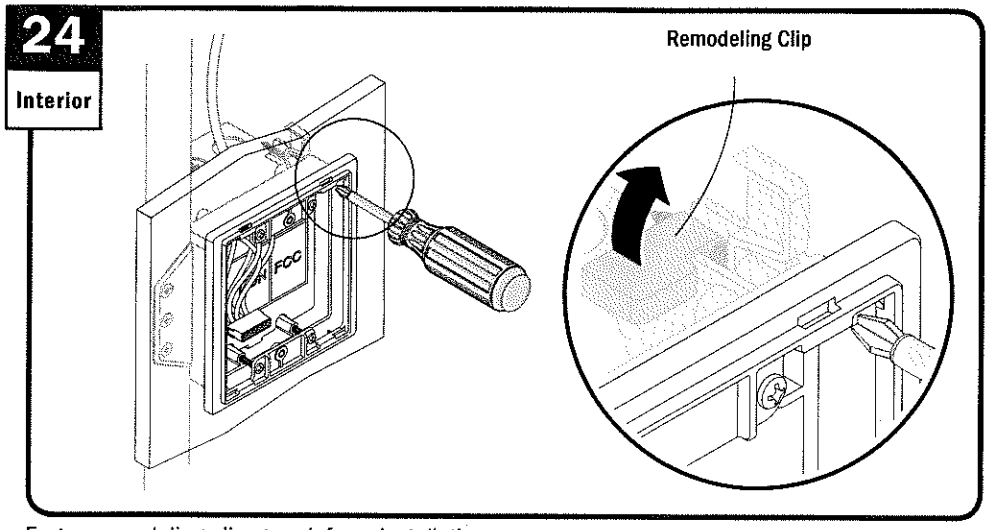

Fasten remodeling clips to reinforce installation.

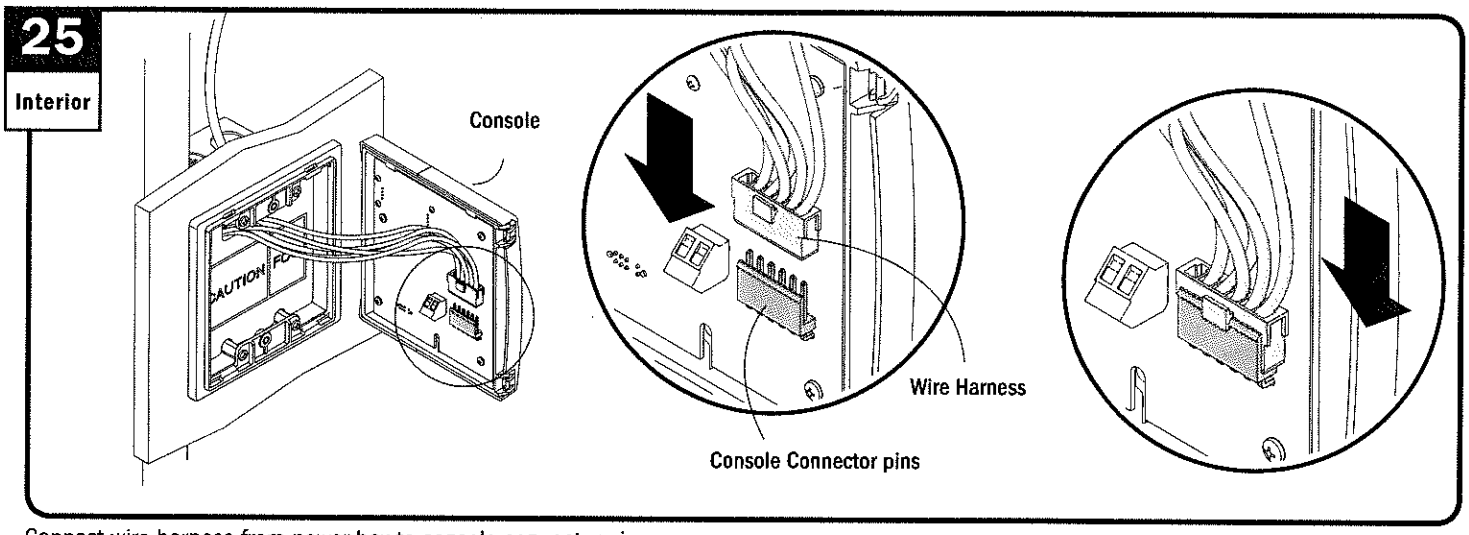

Connect wire harness from power box to console connector pins.

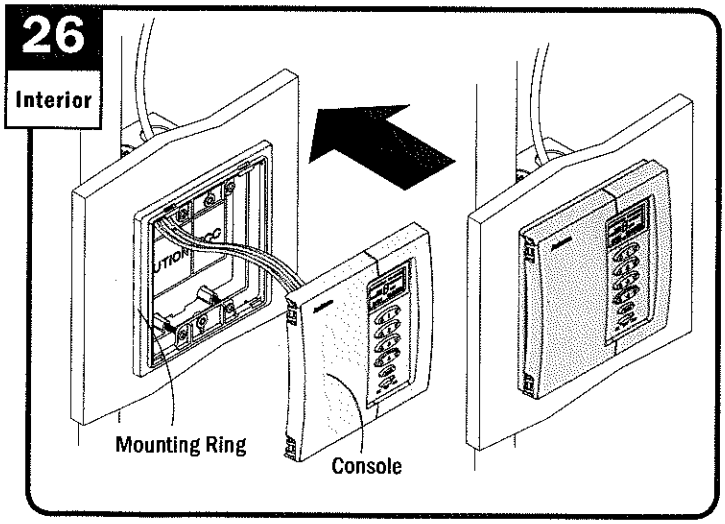

Position console to mounting ring.

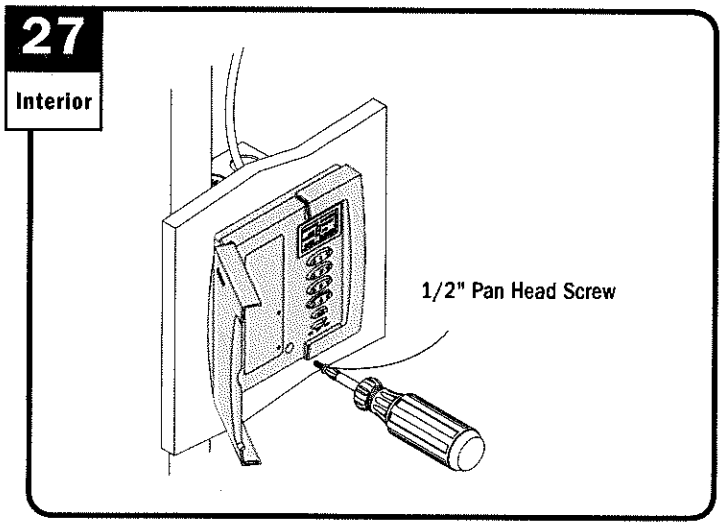

Open console panel and fasten with 1/2" pan head screw.

28

Interior

If sill cover has not been finished, apply finish and allow to dry completely before applying the LED cover.

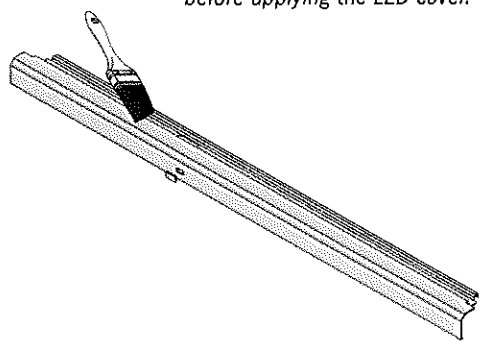

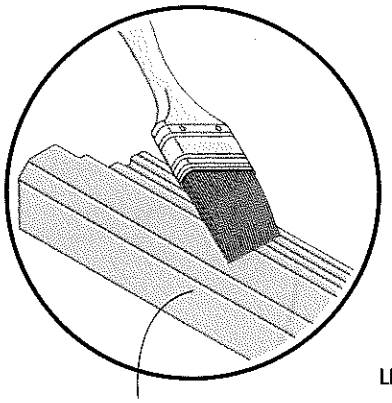

Sill Cover

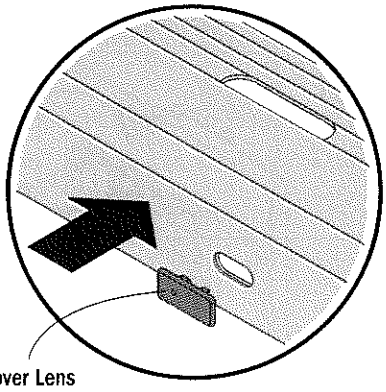

LED Cover Lens

Programming hole must be located on left side.

Verify finish has been applied to sill cover and finish is completely dry. Snap LED cover lens to cover as shown.

29

Interior

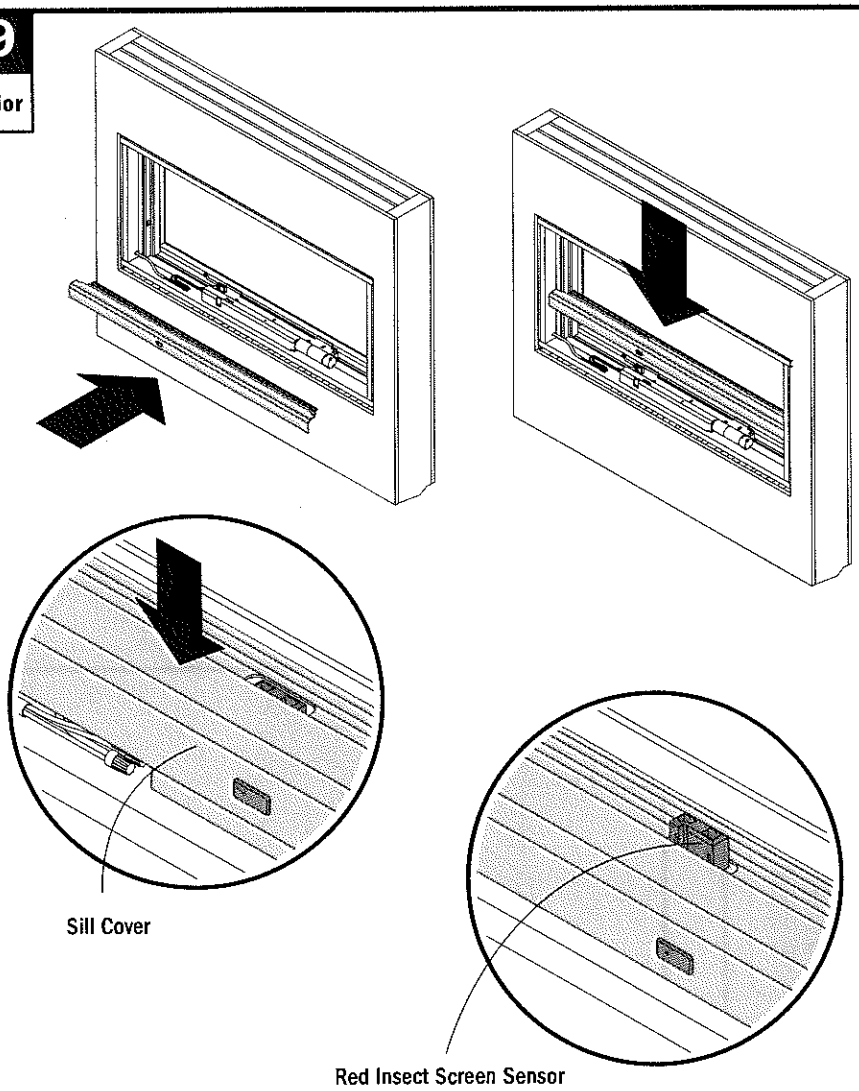

Rotate slightly and snap sill cover onto motor housing. Red insect screen sensor must pop up through hole in sill cover.

30

Interior

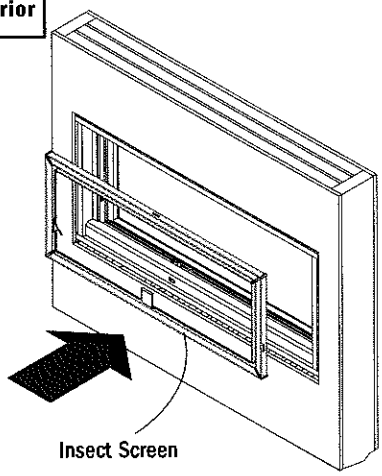

Install insect screen. Insect screen must be in place for electric operator motor to operate.

- **Electric operator application in new construction is complete.**

Application in Existing Construction (For Electric Operator Ready Windows)

► **See wiring diagram for proper wire configuration prior to starting.**

1

Interior

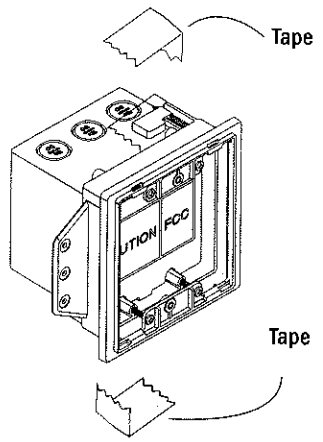

Remove tape from power box.

2

Interior

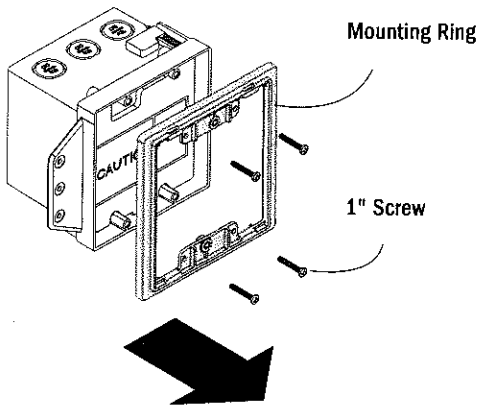

Remove mounting ring and screws from power box and save for reuse.

3

Interior

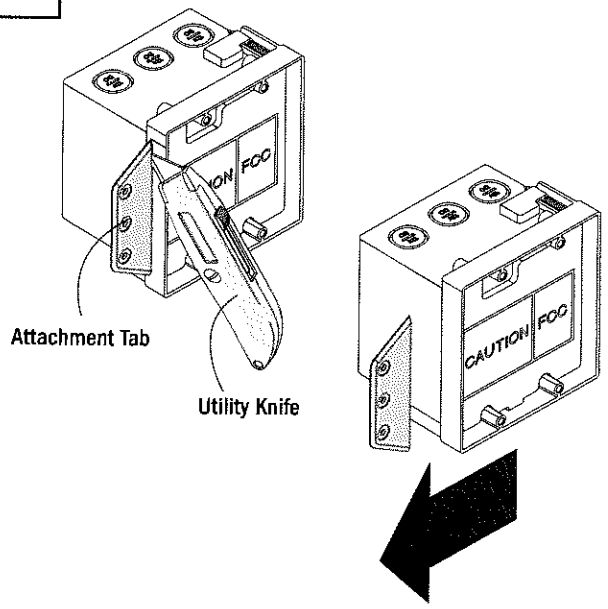

Score attachment tab with utility knife and snap off. Dispose of properly.

4

Interior

⚠ WARNING

Check empty wall cavity before cutting into wall. Failure to do so may result in injury and/or product/property damage.

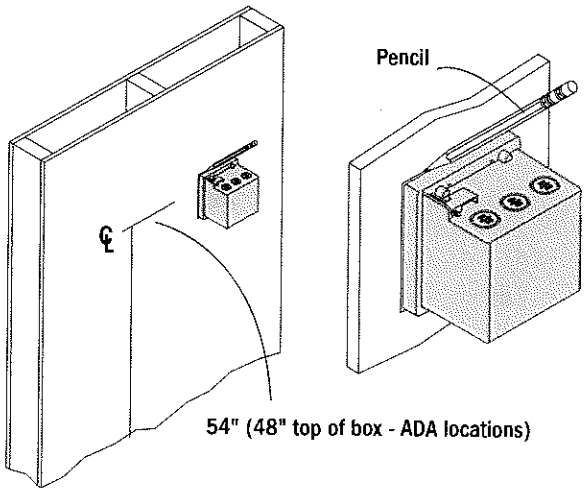

Locate center of power box on interior wall 54" above floor (48" top of box - ADA locations). Trace face of power box on wall as shown.

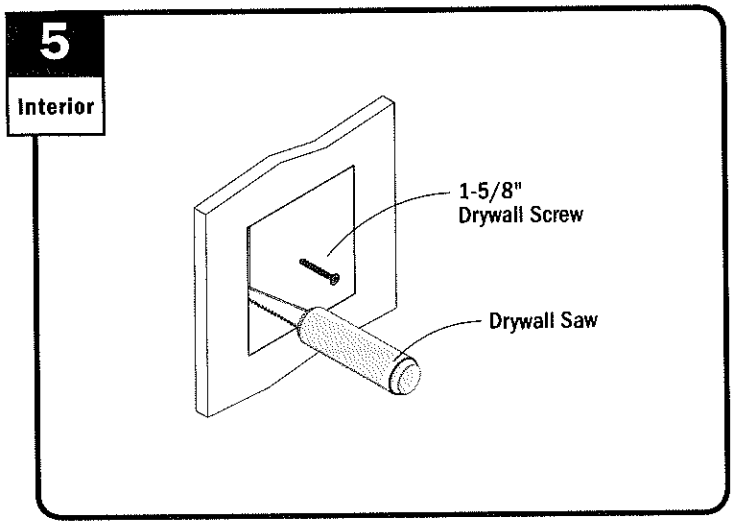

Attach screw and cut drywall on traced line.

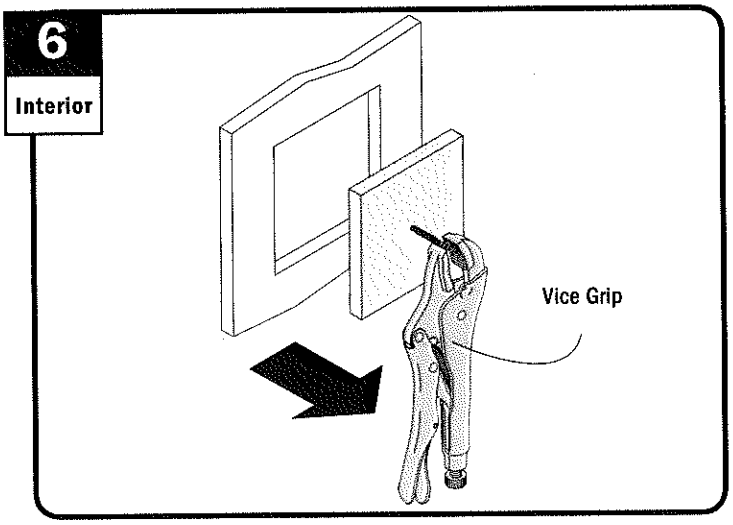

Remove cut drywall.

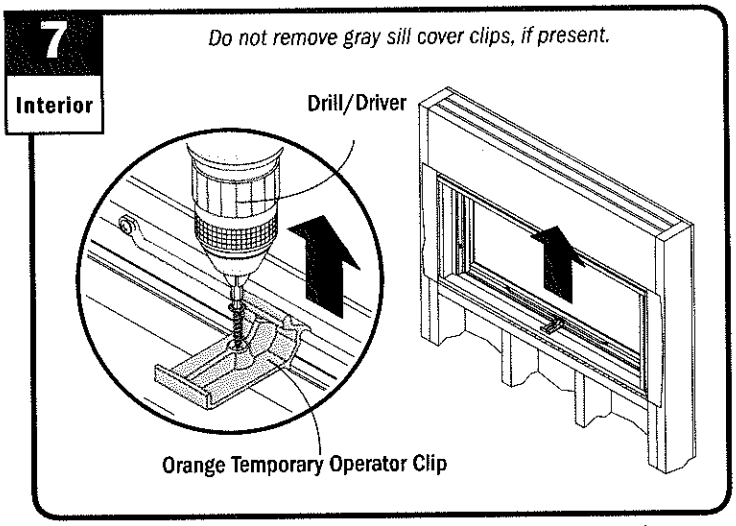

Remove orange temporary operator clip and dispose of properly.

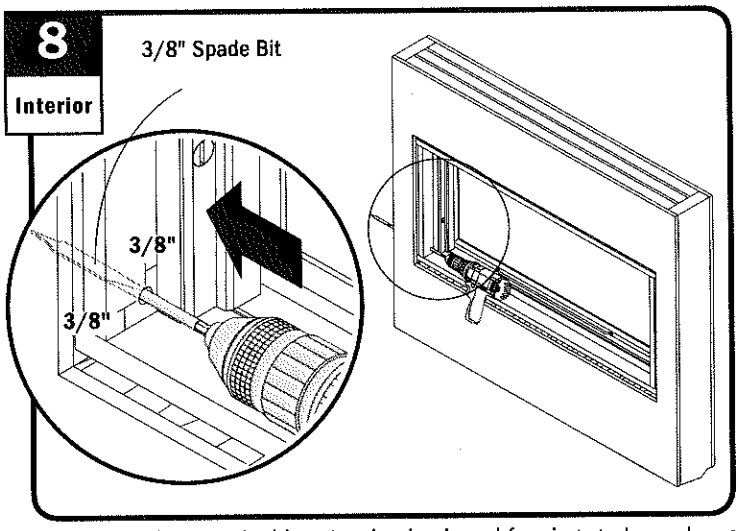

Drill 3/8" hole through side extension jamb and framing studs as shown.

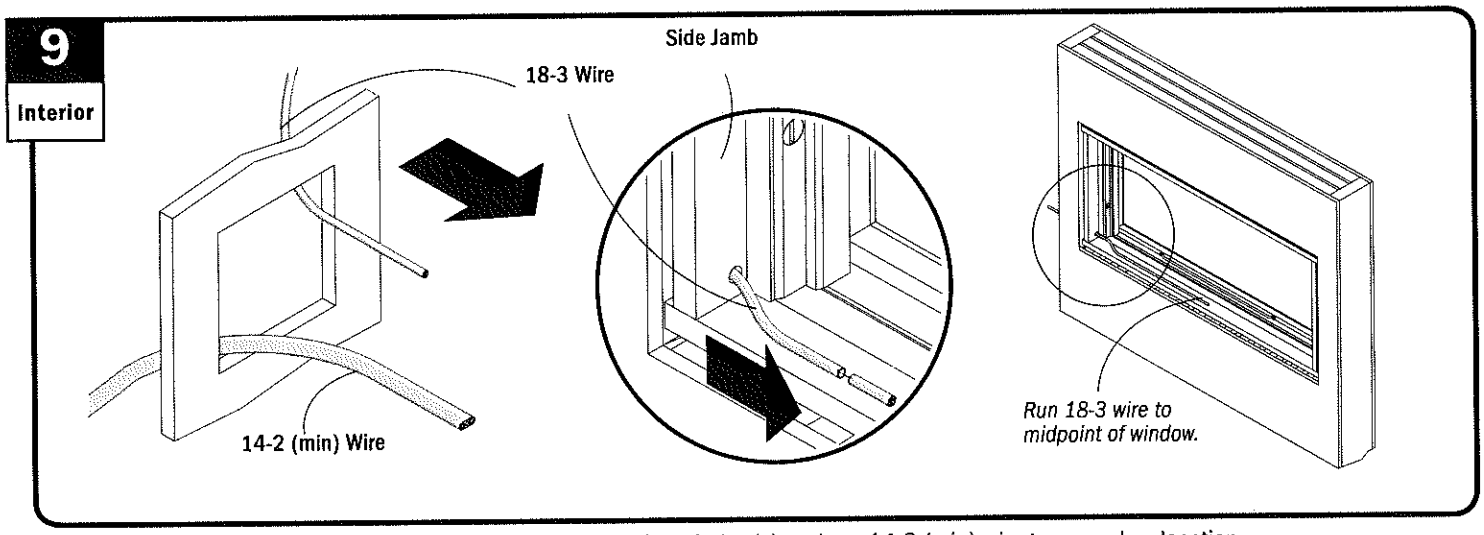

Run 18-3 wire through side jamb between power box and awning window(s) and run 14-2 (min) wire to power box location.

10
Interior

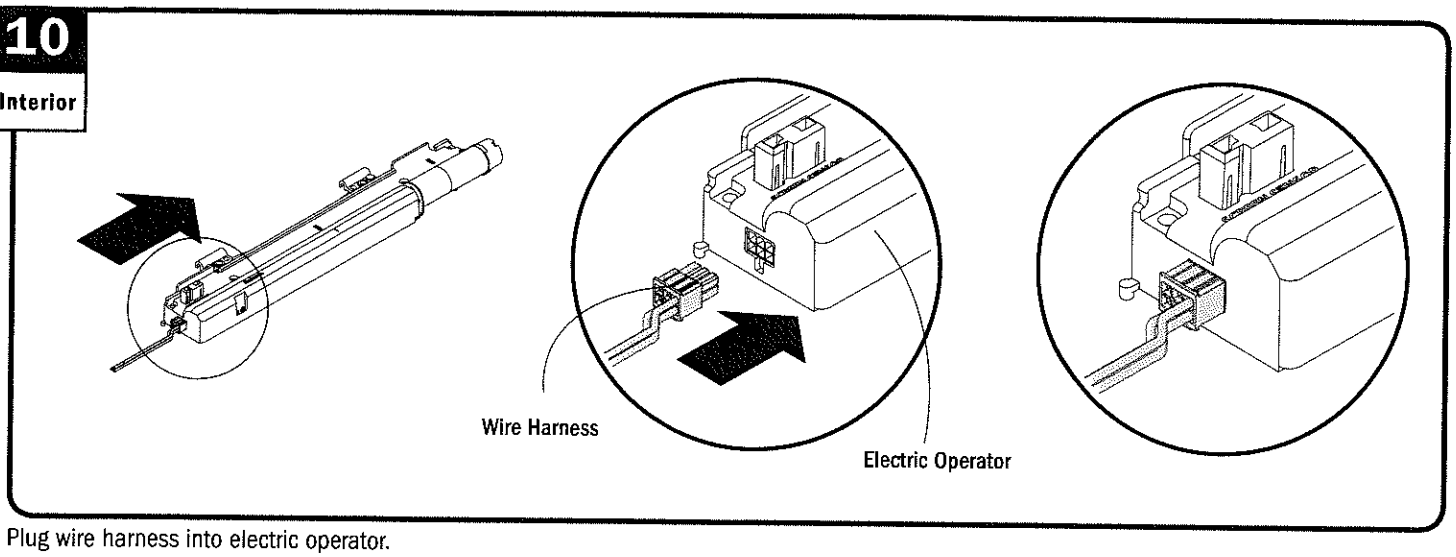

Plug wire harness into electric operator.

11
Interior

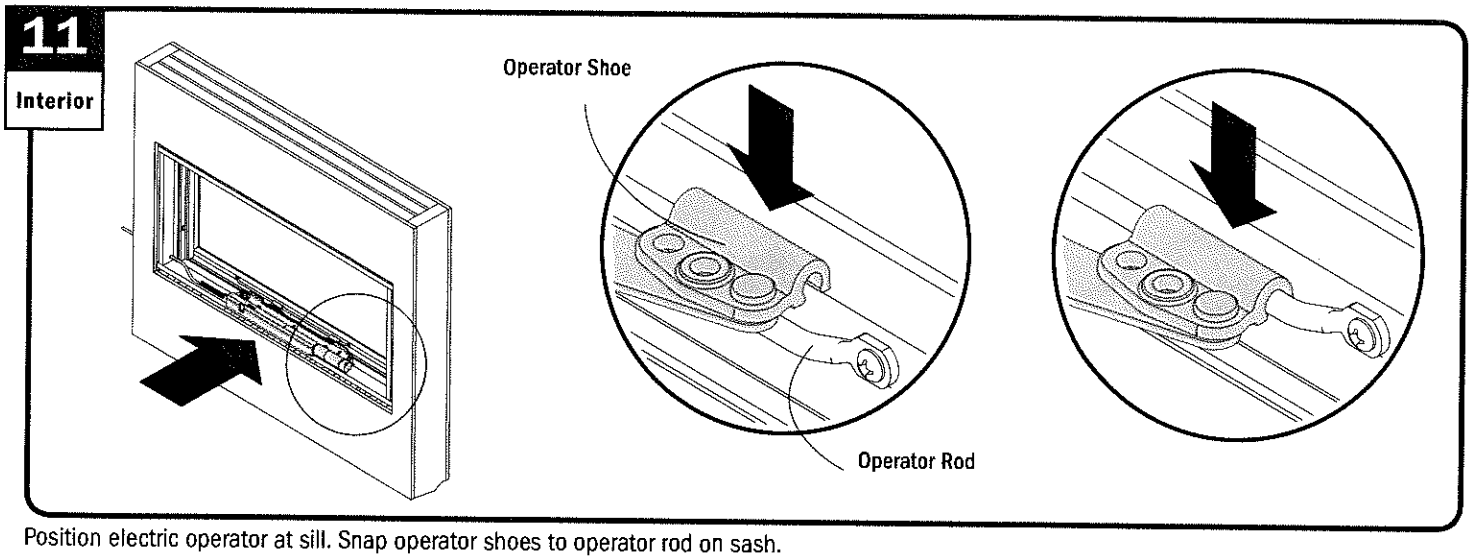

Position electric operator at sill. Snap operator shoes to operator rod on sash.

12
Interior

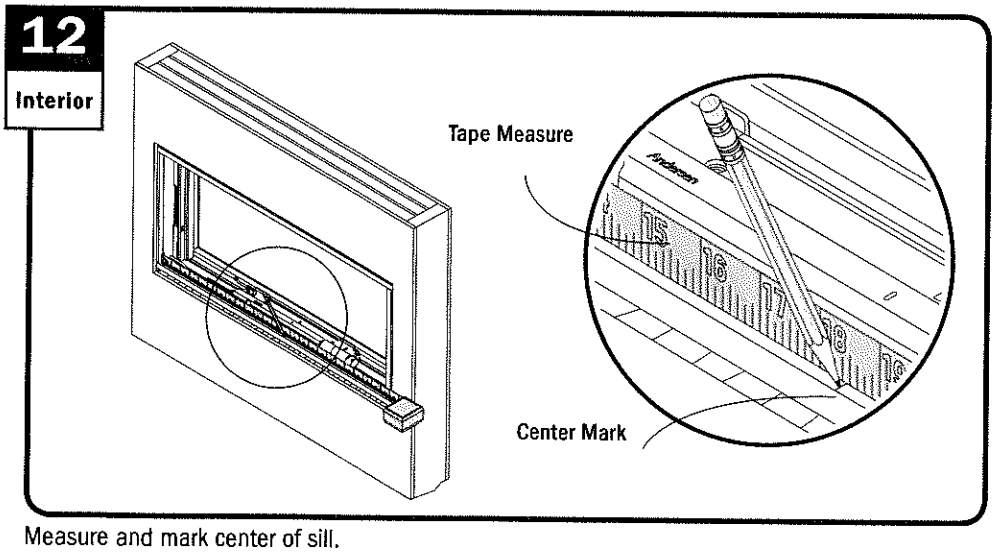

Measure and mark center of sill.

13
Interior

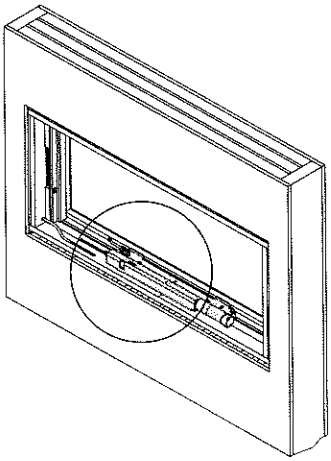

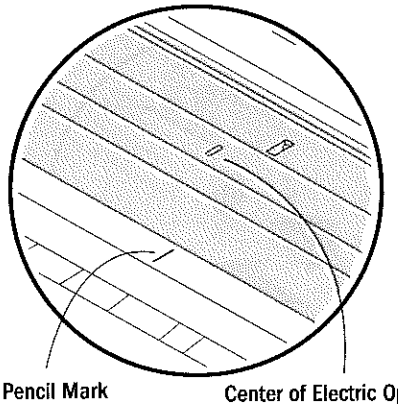

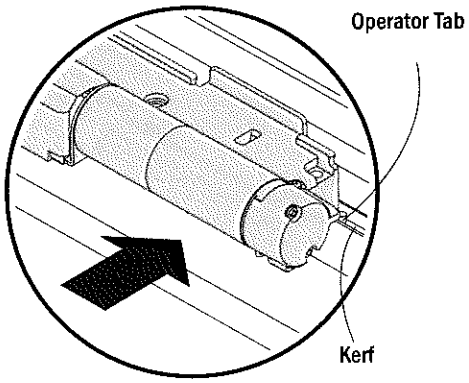

Position center of electric operator at marked line on sill with operator tabs in locating kerf.

14
Interior

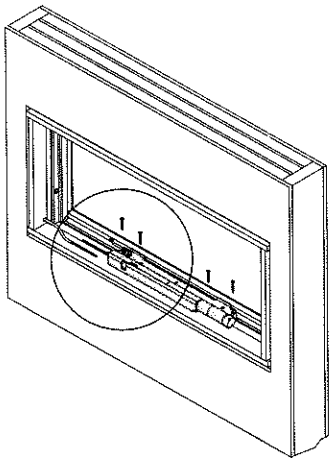

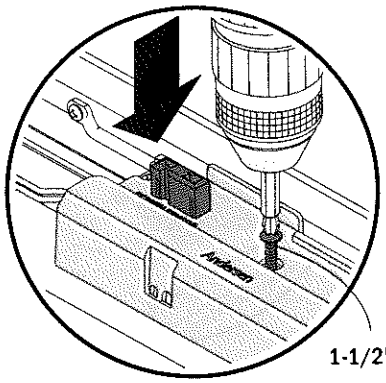

CAUTION

Do not over drive screws. Product damage may result.

Fasten electric operator with four (4) 1-1/2 pan head screws.

15
Interior

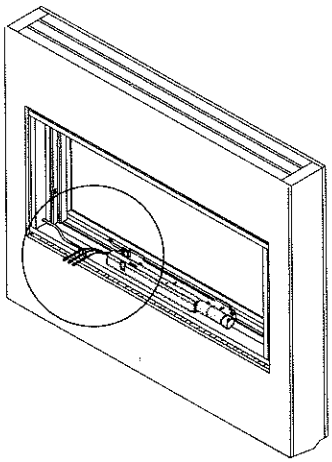

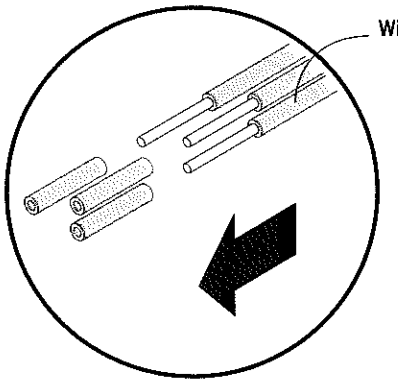

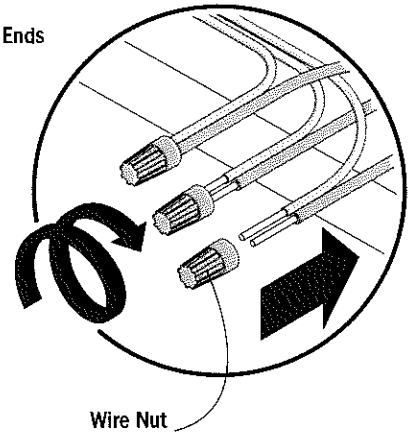

Strip wire harness ends and align same color wires with 18-3 wires and connect with wire nuts. Make sure wire color continuity is maintained.

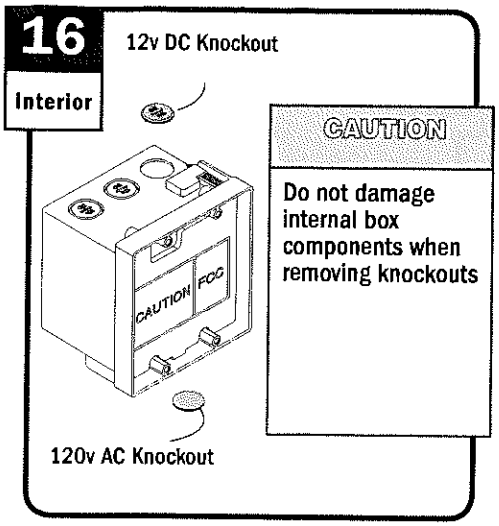

Remove wiring access hole knockouts and dispose of properly.

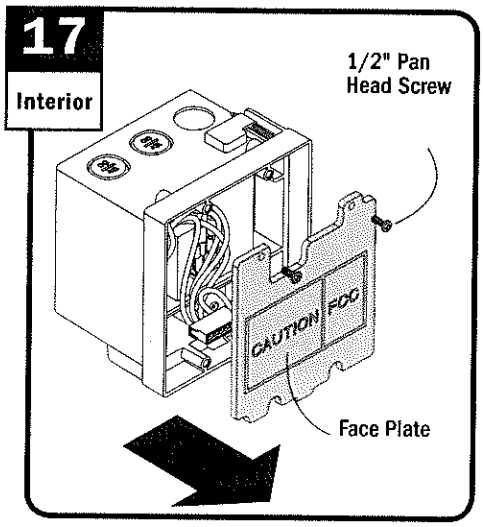

Remove two (2) 1/2" pan head screws and face plate and save for reuse.

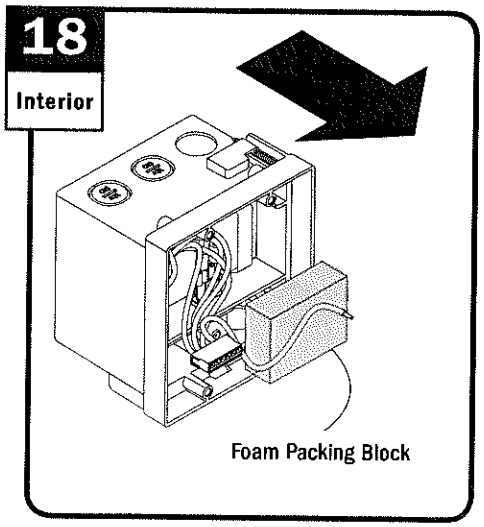

Remove foam packing block and dispose of properly.

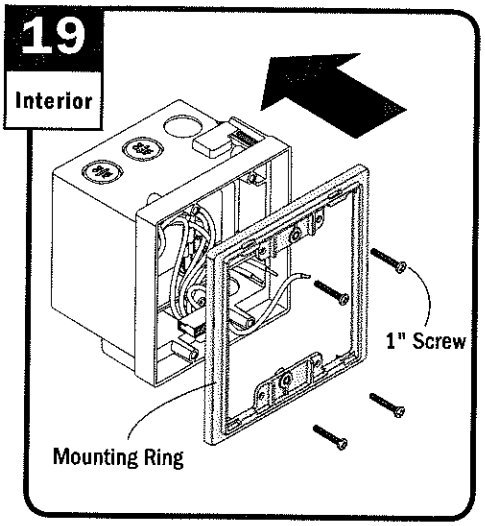

Reapply mounting ring and fasten with four (4) 1" screws.

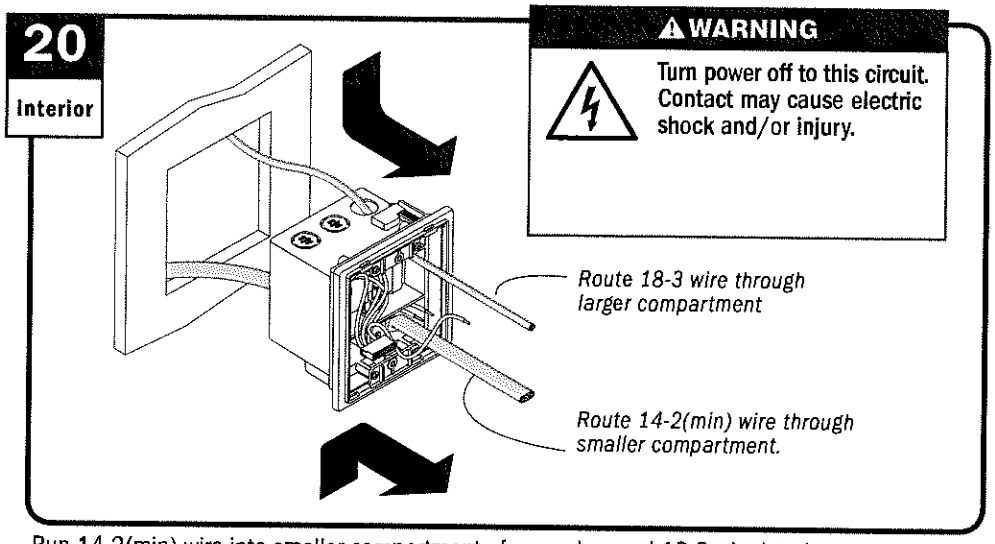

Run 14-2(min) wire into smaller compartment of power box and 18-3 wire into larger compartment of power box. See wiring diagram on page 41.

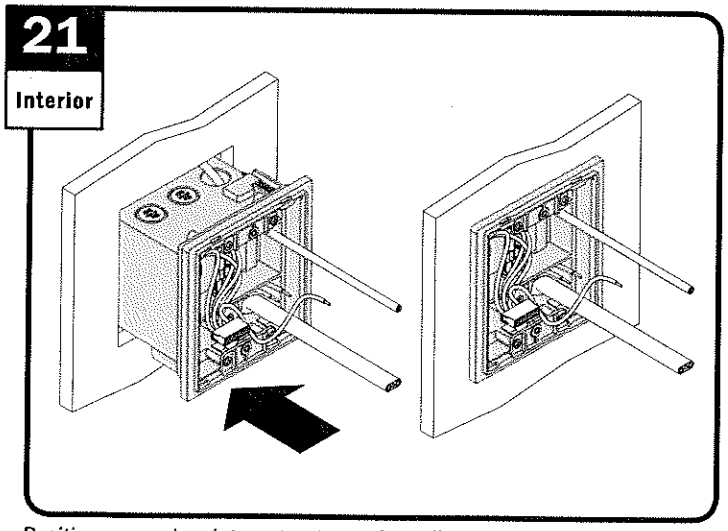

Position power box into cut out area in wall.

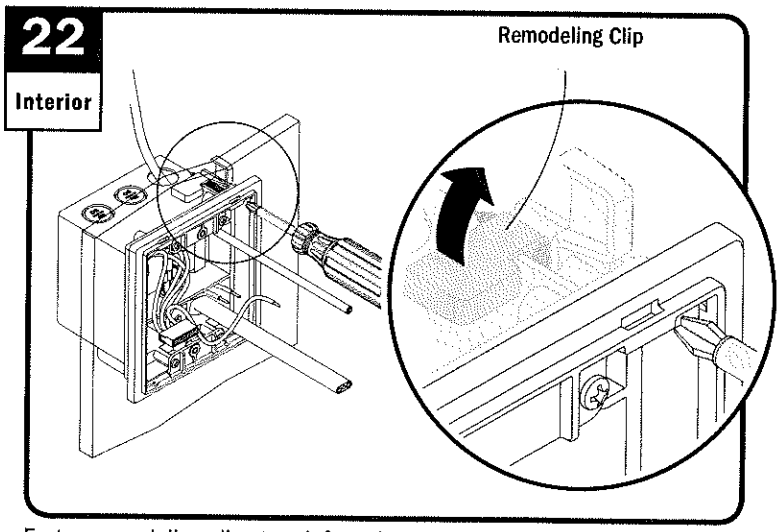

Fasten remodeling clips to reinforce installation.

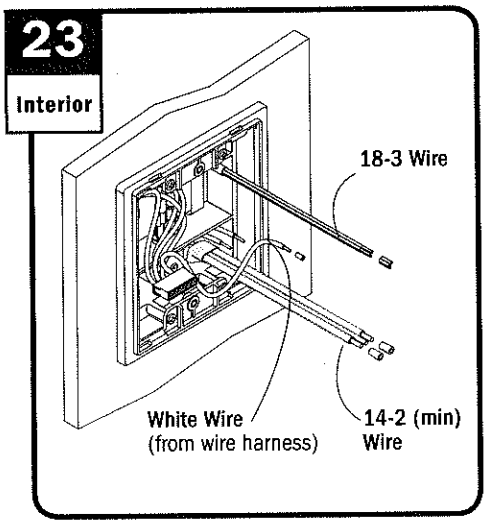

Strip wire ends.

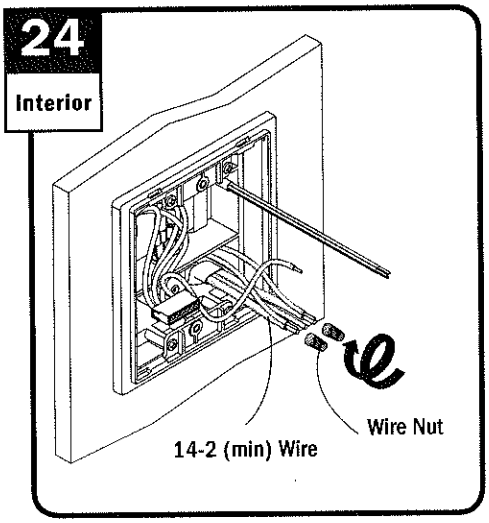

Align 14-2 (min) wires (black to black and white to white) in smaller compartment of power box and connect with wire nuts.

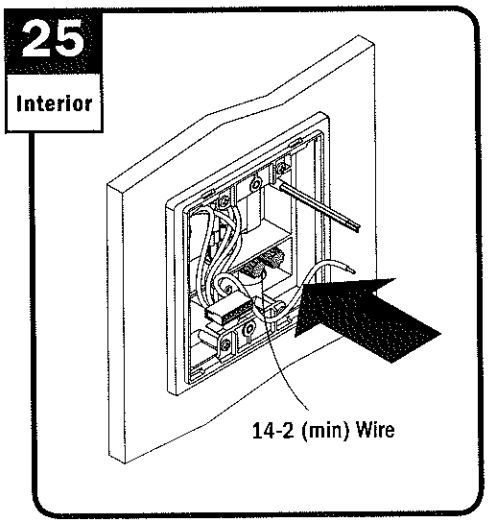

Tuck connected 14-2 (min) wires into small compartment of power box, as shown.

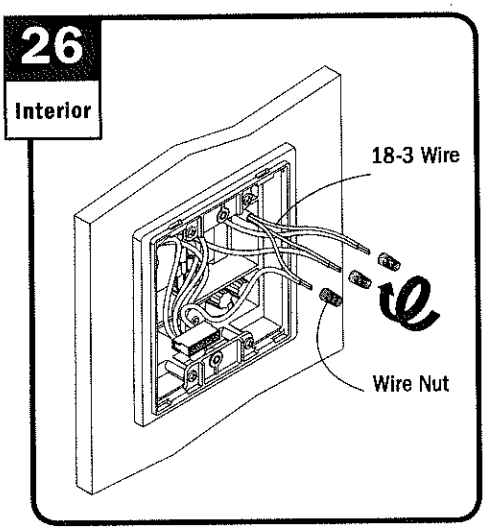

Align colored 18-3 wires to same colored wires in larger compartment and connect with wire nuts.

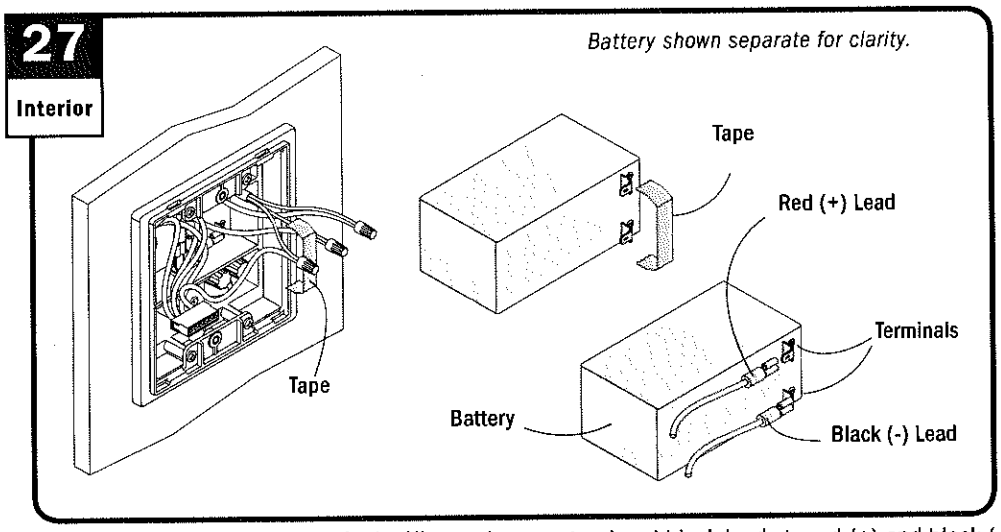

Remove tape from battery terminals. Align and connect red and black leads to red (+) and black (-) battery terminals.

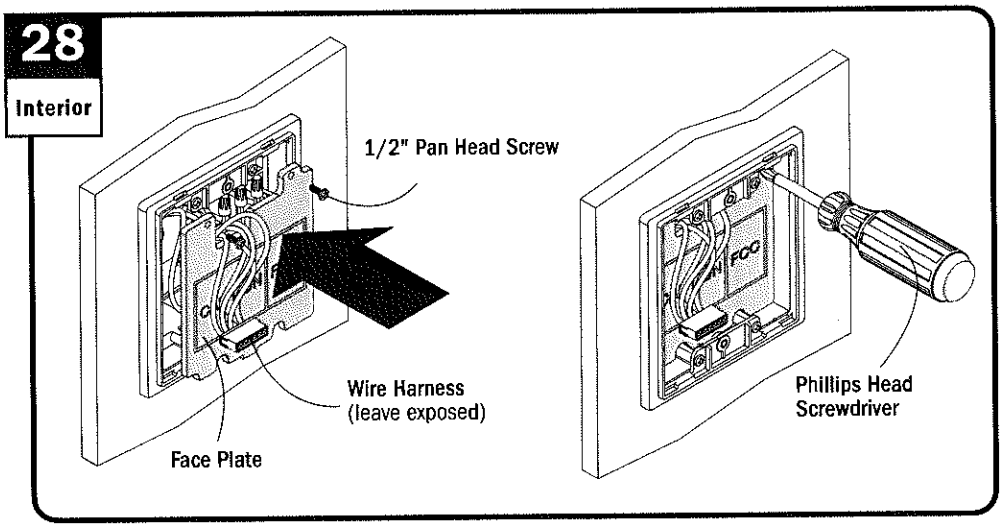

Tuck connected 18-3 wires into large compartment of power box and reapply faceplate, as shown.

29
Interior

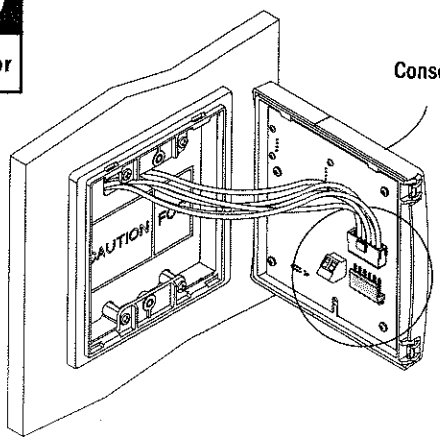

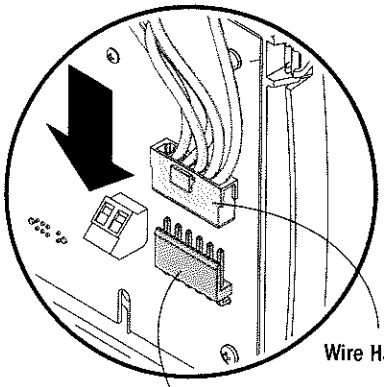

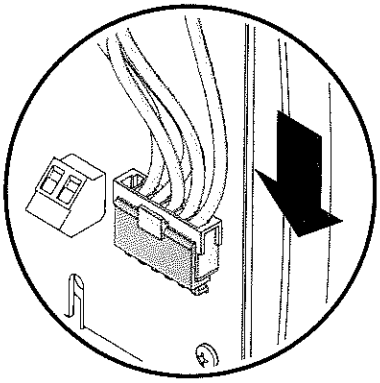

Connect wire harness from power box to console connector pins.

30
Interior

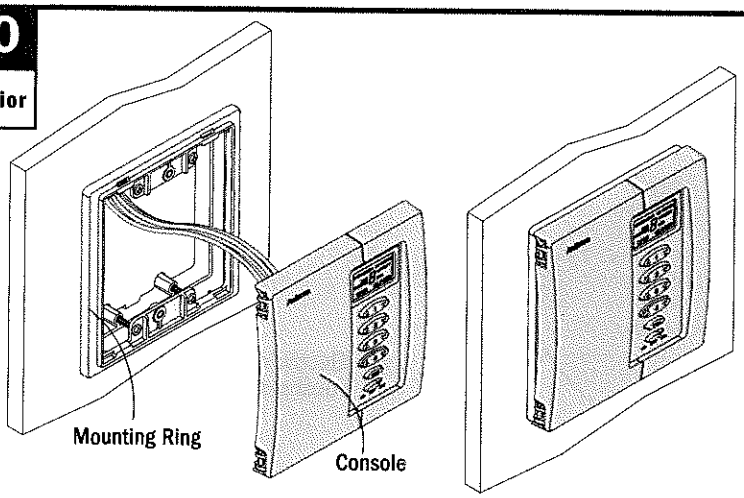

Position console to mounting ring.

31
Interior

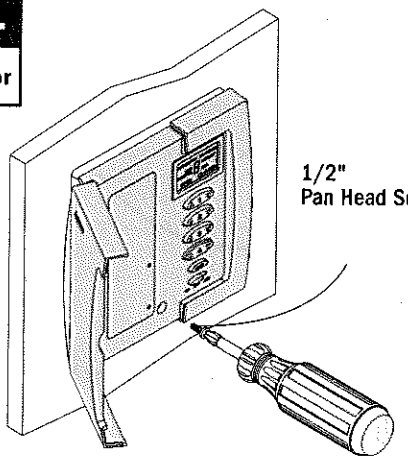

Open console panel and fasten with 1/2" pan head screw.

32
Interior

If sill cover has not been finished, apply finish and allow to dry completely before applying the LED cover.

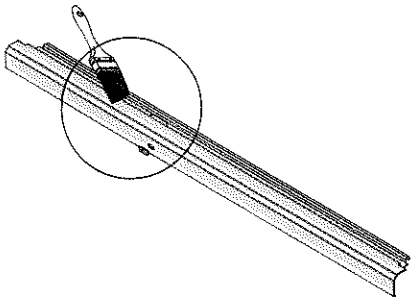

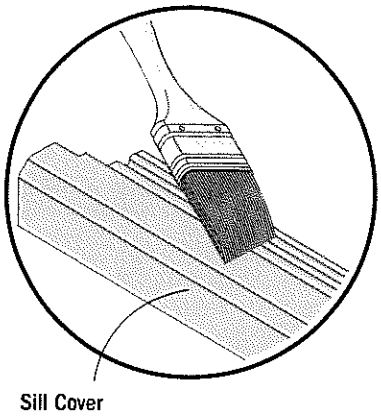

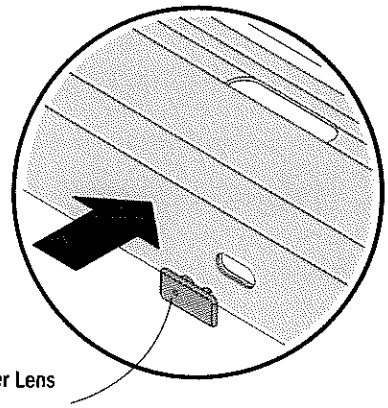

Programming hole must be located on left side.

Verify finish has been applied to sill cover and finish is completely dry. Snap LED cover lens to cover as shown.

33

Interior

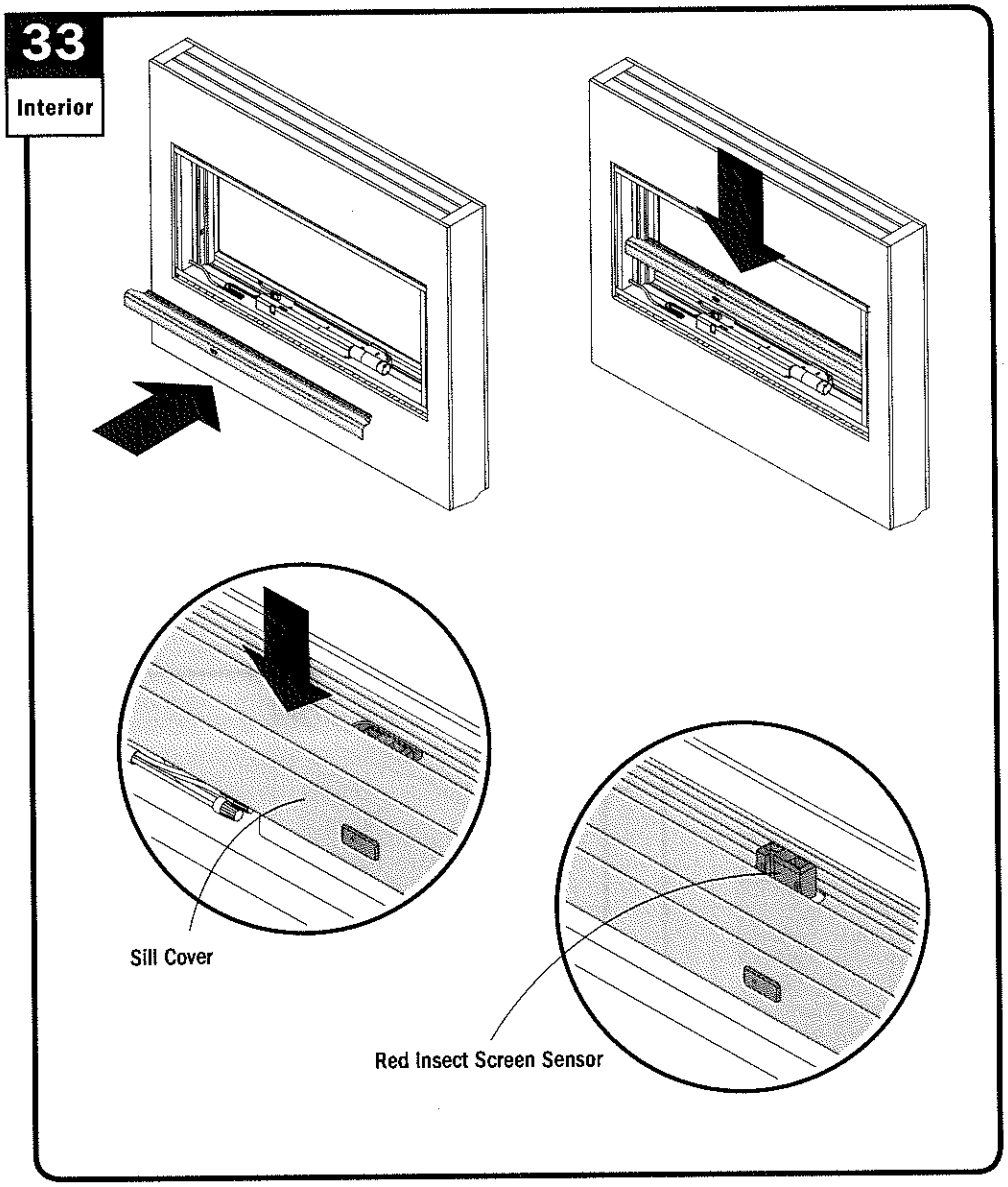

Rotate slightly and snap sill cover onto motor housing. Red insect screen sensor must pop up through hole in cover.

34

Interior

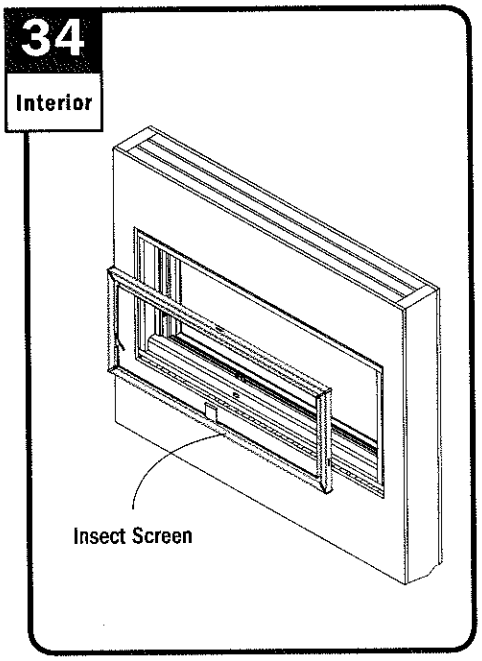

Install insect screen. Insect screen must be in place for electric operator motor to operate.

- **Electric operator application in existing construction is complete.**

Unit Preparation for Electric Operator with PowerAssist™ Technology Retrofit Applications

Andersen WINDOWS • DOORS

for Andersen® A-Series Awning and Venting Transom and 400 Series Awning Windows

Thank you for choosing Andersen.

For questions call 1-888-888-7020. For more information and/or guides visit andersenwindows.com.

Please leave this guide with building owner.

- ***Read guide from beginning to end before starting installation. Read all warnings and cautions during unit installation.***
- ***Check with your local building code official to identify and confirm compliance with local building code requirements.***

Parts Included /

Conversion Sub-Pack Kit - 400 Series/A-Series (after June, 2013)
- (1) Operator Rod
- (1) Rod Bracket (A-Series)
- (1) Rod Bracket (400 Series)
- (2) Sill Cover Clip (Gray)/
- (1) Temporary Operator Clip (Orange)
- (1) Screw Pack

Conversion Sub-Pack Kit - A-Series (before June, 2013)
- (1) Operator Rod
- (2) Sill Cover Clip (Gray)
- (1) Temporary Operator Clip (Orange)
- (1) Screw Pack

Tools Needed /
- Safety glasses
- Tape measure
- Drill/Driver
- Phillips Head Screw Driver
- 3/32" Drill Bit
- Utility Knife
- Thin Blade Putty Knife
- Pencil
- Pliers

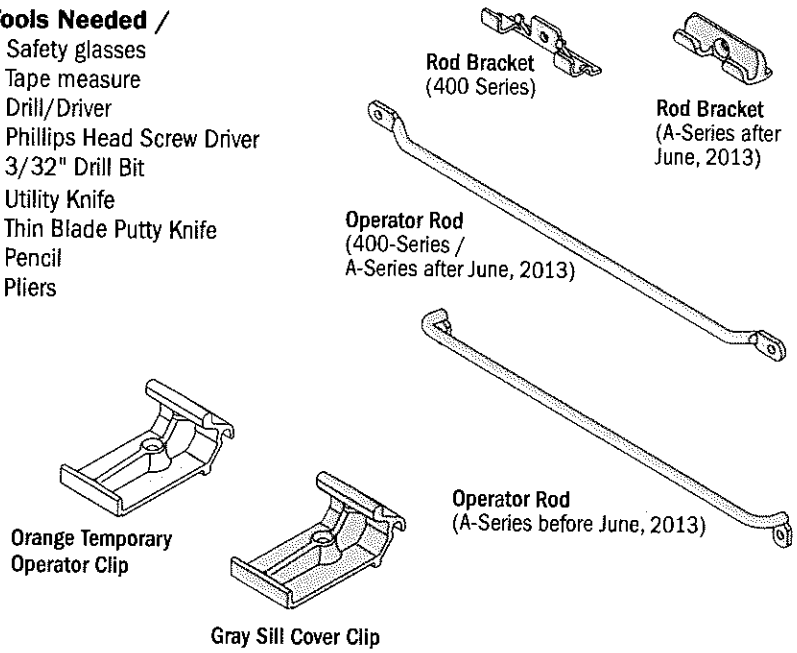

- **For A-Series retrofit unit preparation (units manufactured before June, 2013), go to page 20.**
- **For A-Series retrofit unit preparation (units manufactured after June, 2013), go to page 24.**
- **For 400 Series retrofit unit preparation, go to page 28.**

⚠ WARNING

Use caution when working at elevated heights and around unit openings. Follow manufacturers' instructions for ladders and/or scaffolding. Failure to do so may result in injury or death.

⚠ WARNING

Follow manufacturers' instructions for hand or power tools. Always wear safety glasses. Failure to do so may result in injury and/or product damage.

"Andersen" and all other marks where denoted are trademarks of Andersen Corporation. ©2013-2013 Andersen Corporation. All rights reserved.

A-Series Retrofit Unit Preparation (Units Manufactured before June, 2013)

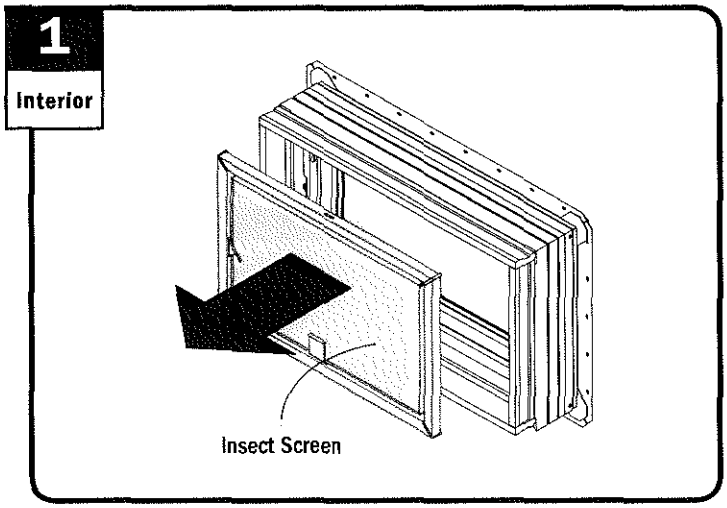

Remove insect screen.

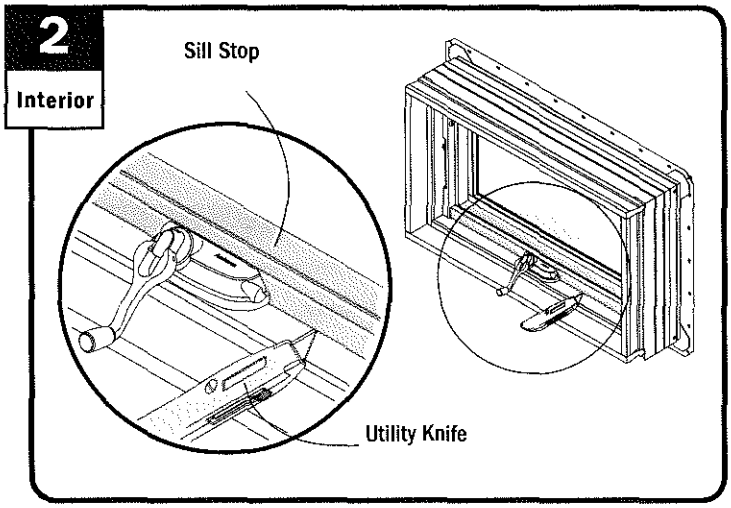

Break varnish or paint seal by scoring between sill stops and frame.

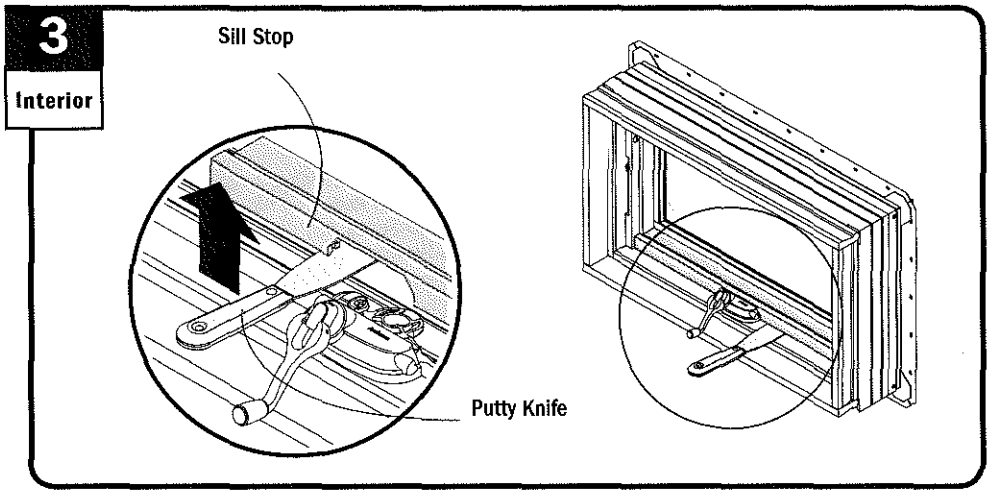

Remove sill stop using thin blade putty knife and dispose of properly.

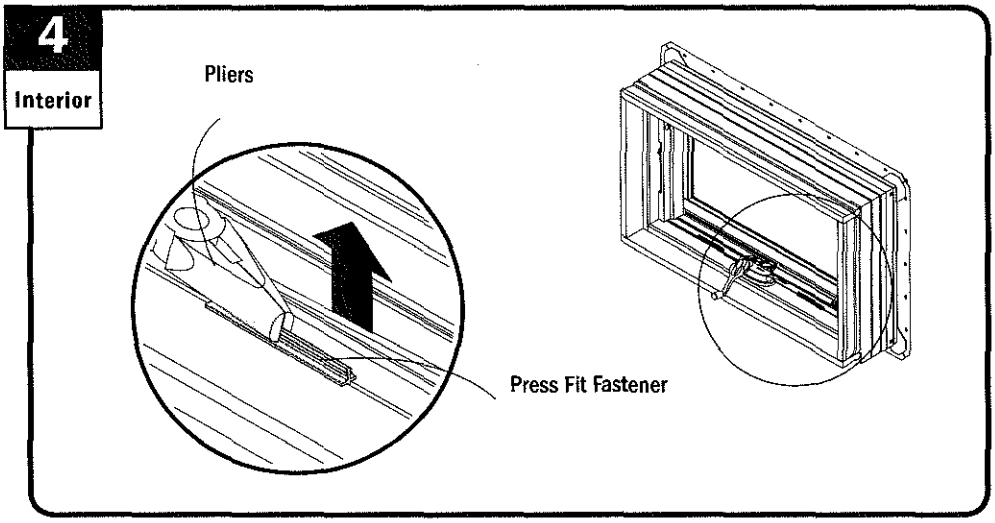

Remove press fit fasteners at sill using pliers and dispose of properly.

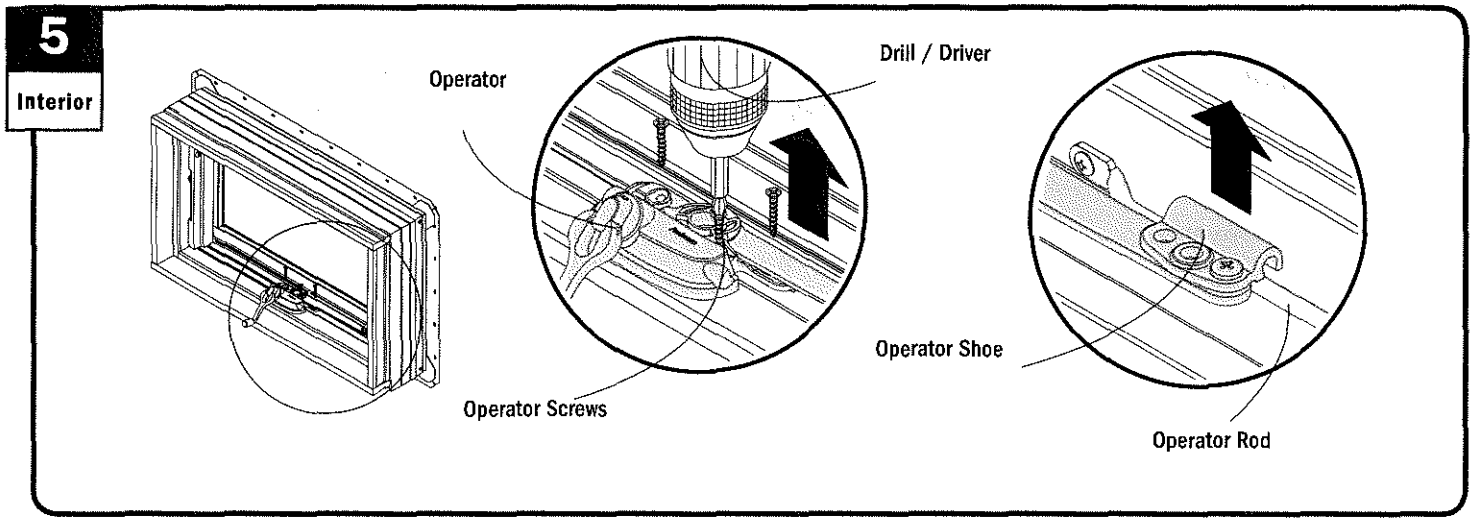

Remove operator screws and lift operator shoe from operator rod.

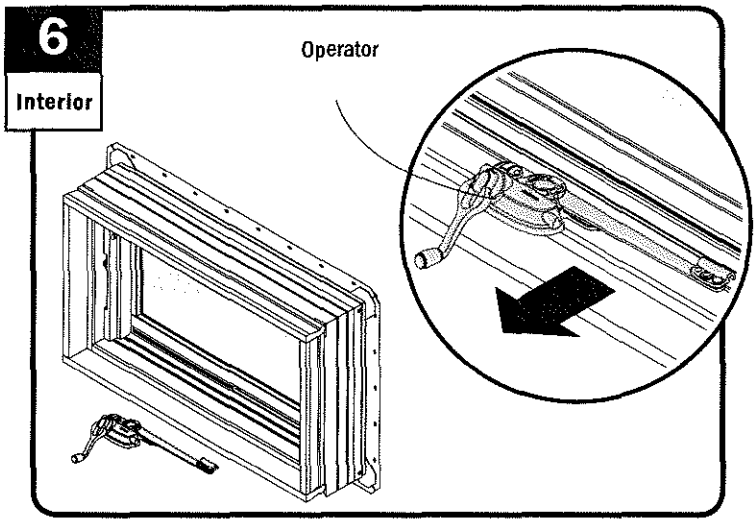

Remove operator and dispose of properly.

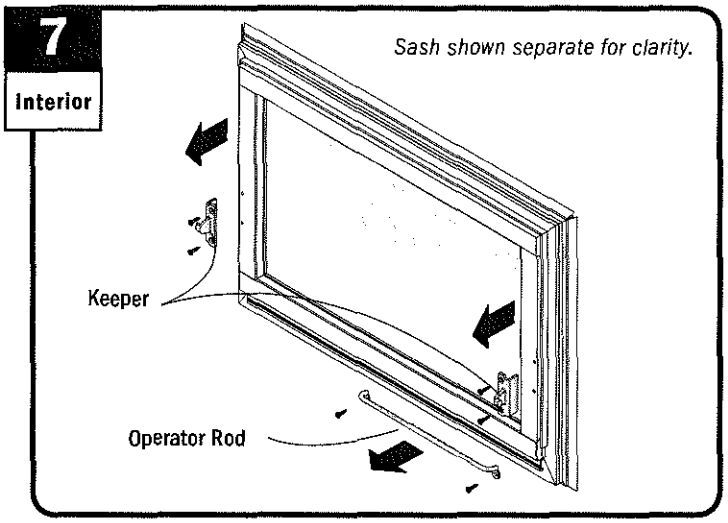

Remove keepers and operator rod and dispose of properly.

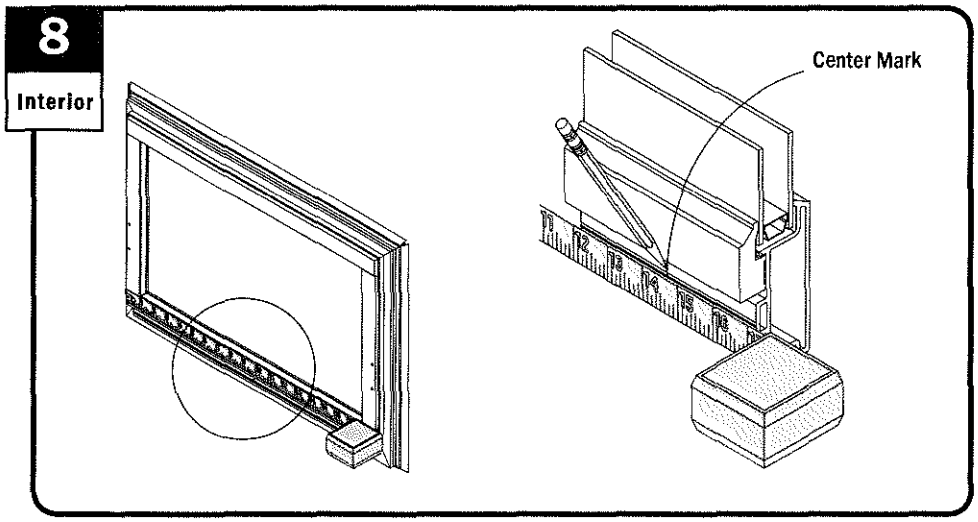

Measure and mark center of sash.

9
Interior

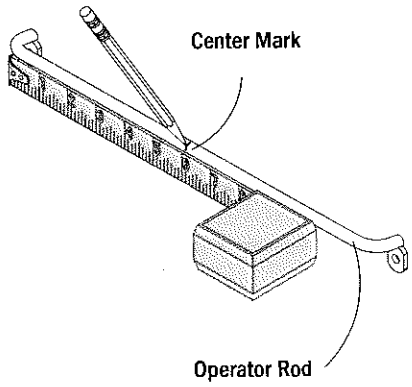

Measure and mark center of operator rod.

10
Interior

CAUTION

Operator rod must be oriented correctly or operator will not function. Failure to do so may result in product/property damage.

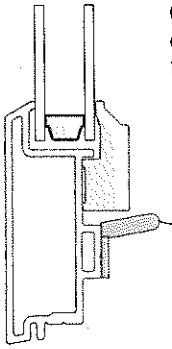

Position operator rod as shown.

Cross Section Detail

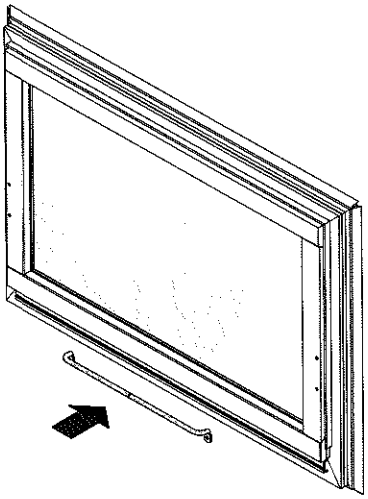

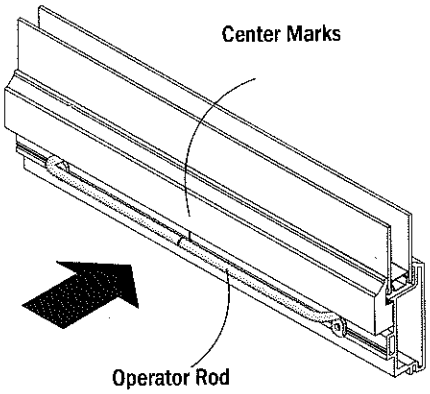

Align center mark on operator rod to center mark on sash.

11
Interior

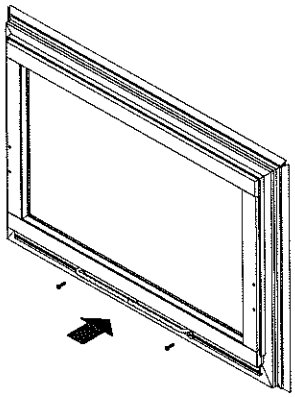

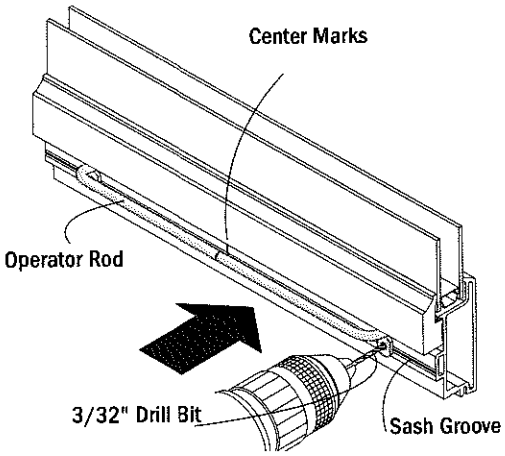

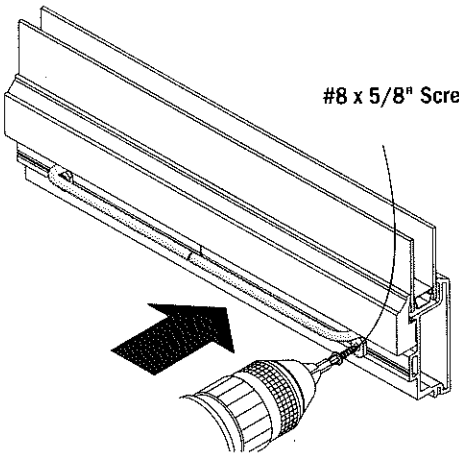

Drill 3/32" holes, 1/2" deep using operator rod as a guide, through same groove on sash as previous holes, and fasten using two (2) #8 x 5/8" screws.

12 Interior

IMPORTANT

If electric operator is not applied now, orange temporary operator clip must be attached to keep sash in closed position.

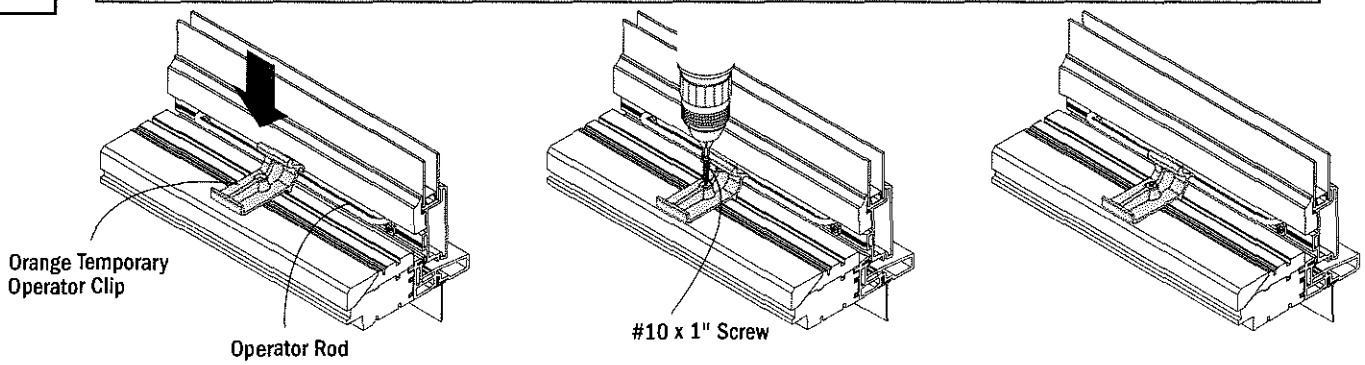

Attach orange temporary operator clip to operator rod and fasten to frame using #10 x 1" screw.

13 Interior

Units 42" and Wider Only

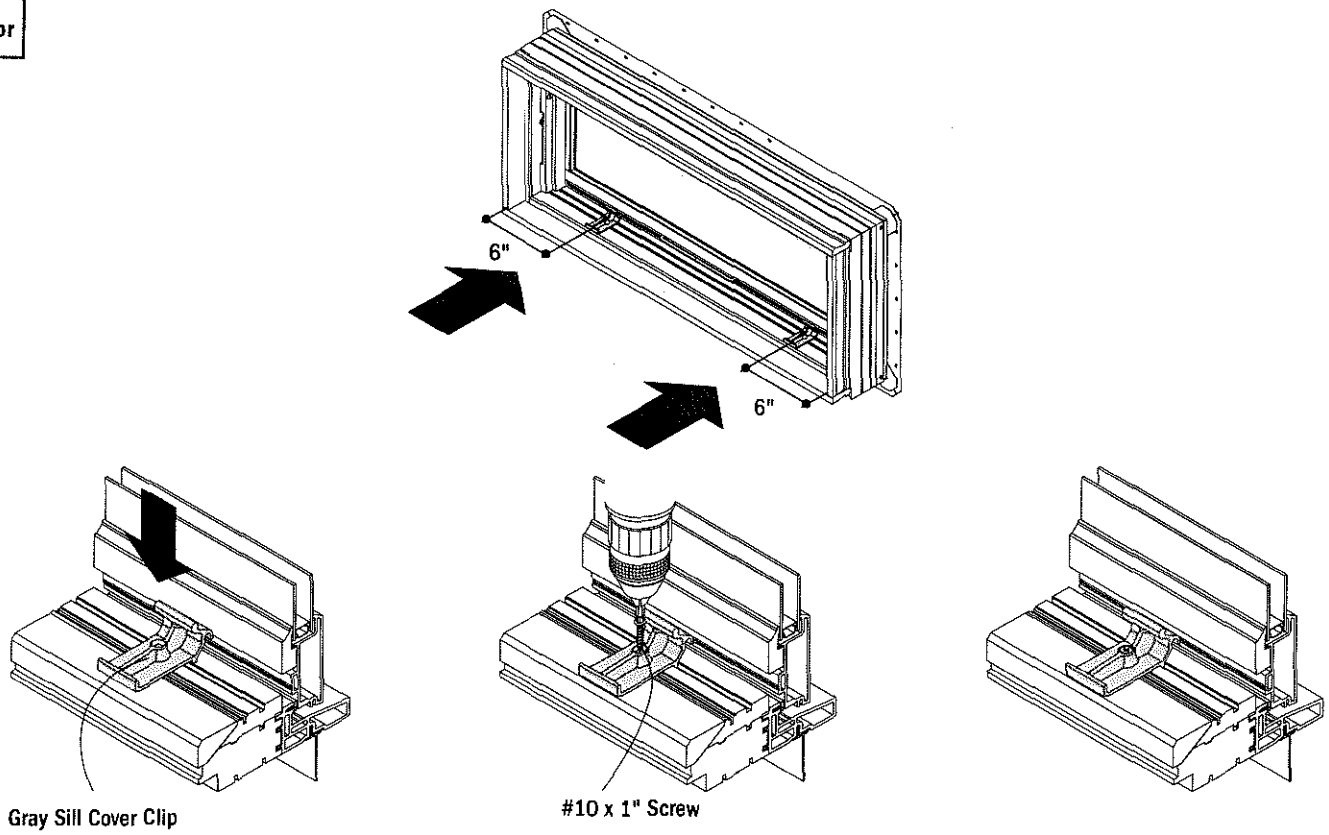

For units 42" or wider, position gray sill cover clips 6" from each side and fasten using #10 x 1" screw.

- **A-Series Retrofit Unit Preparation (units manufactured before June, 2013) is complete.**
- **Proceed to Electric Operator Application Section.**

A-Series Retrofit Unit Preparation (Units Manufactured after June, 2013)

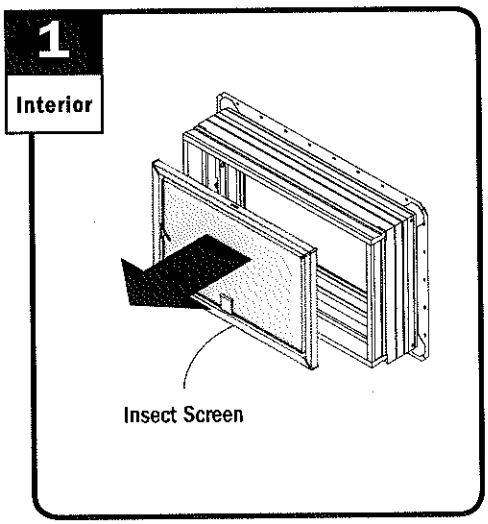

Remove insect screen.

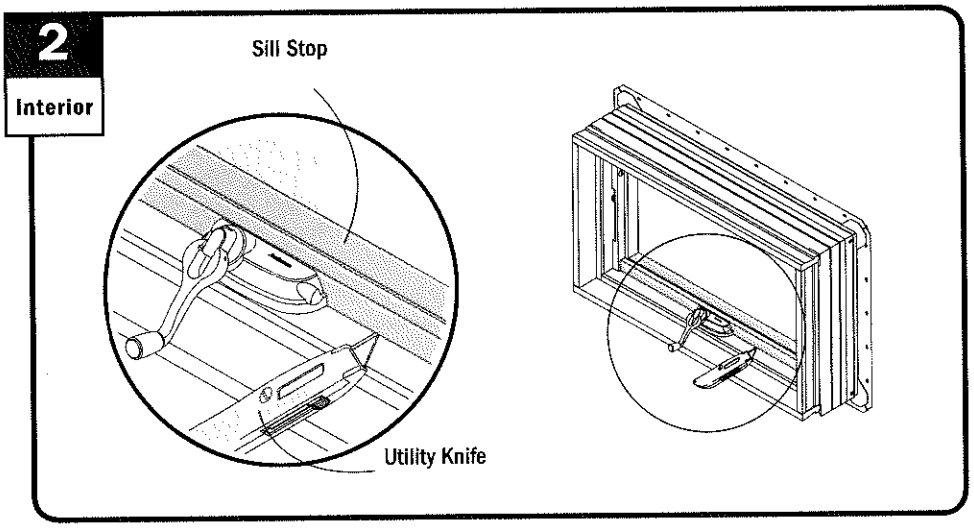

Break varnish or paint seal by scoring between sill stops and frame.

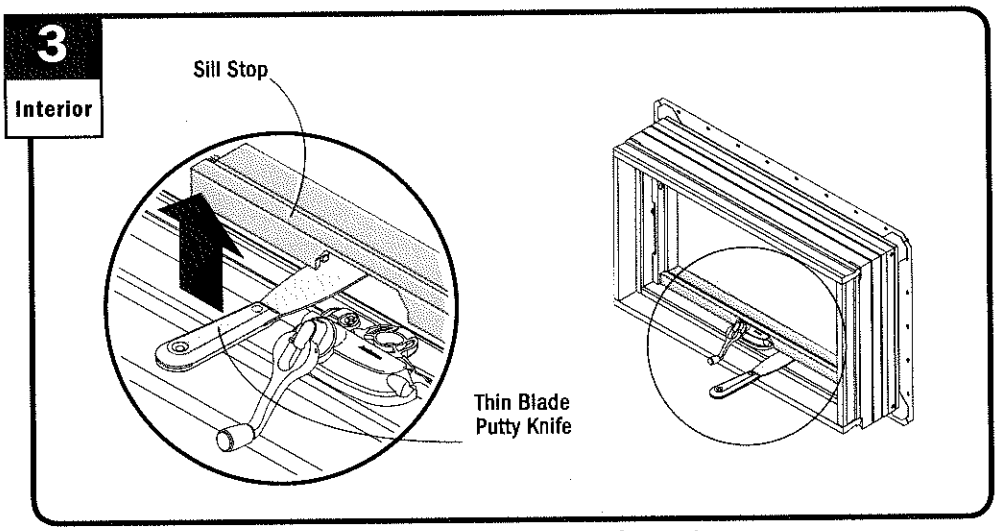

Remove sill stop using thin blade putty knife and dispose of properly.

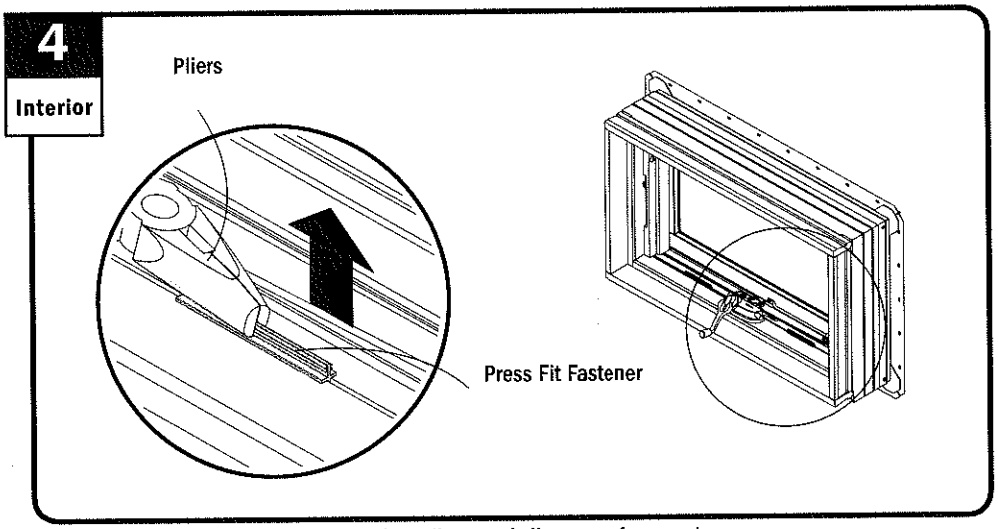

Remove press fit fasteners at sill using pliers and dispose of properly.

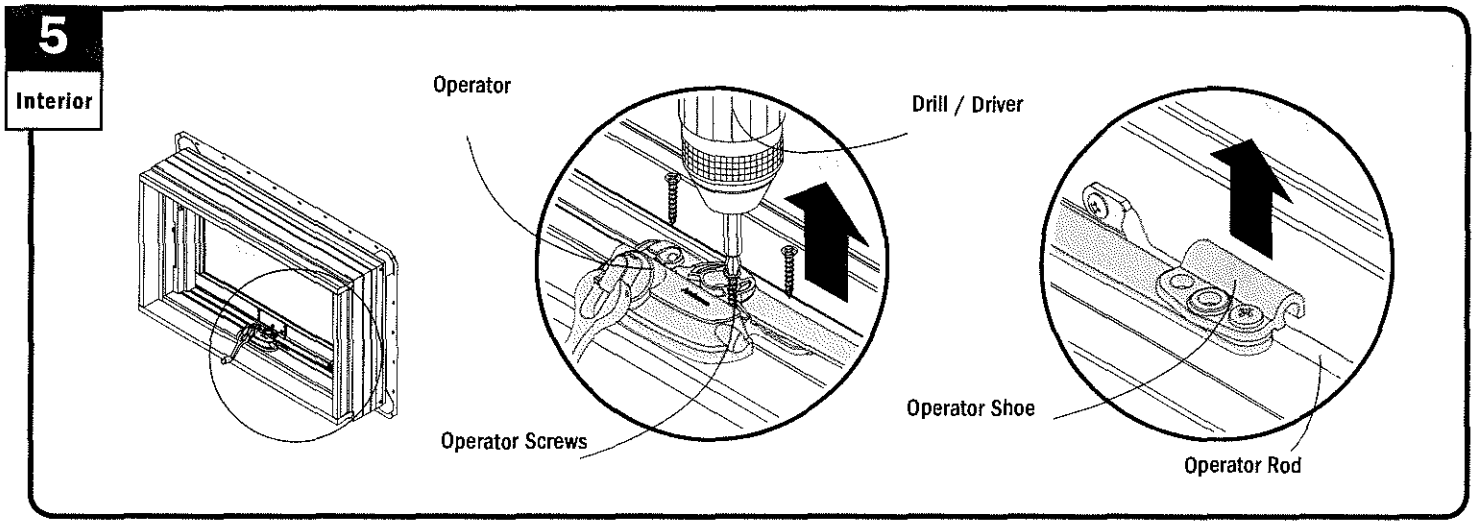

Remove operator screws and lift operator shoe from operator rod.

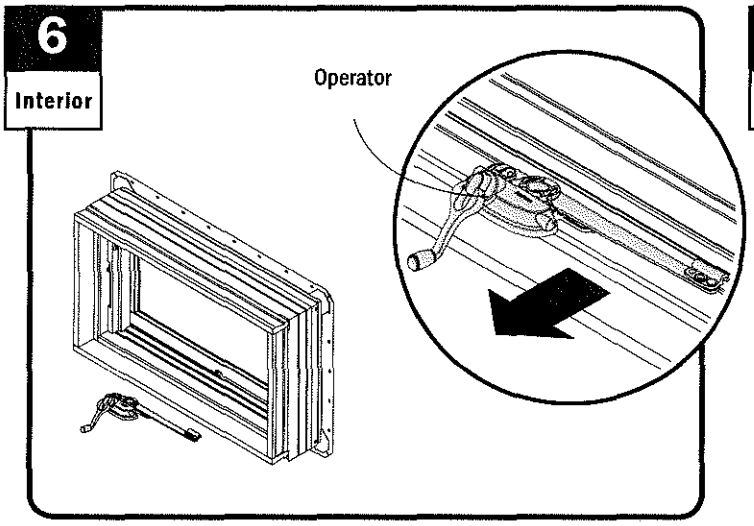

Remove operator and dispose of properly.

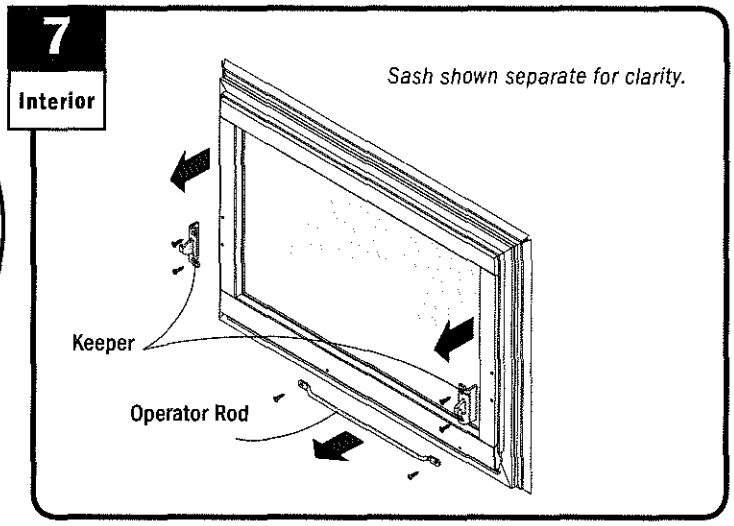

Remove keepers and operator rod and dispose of properly.

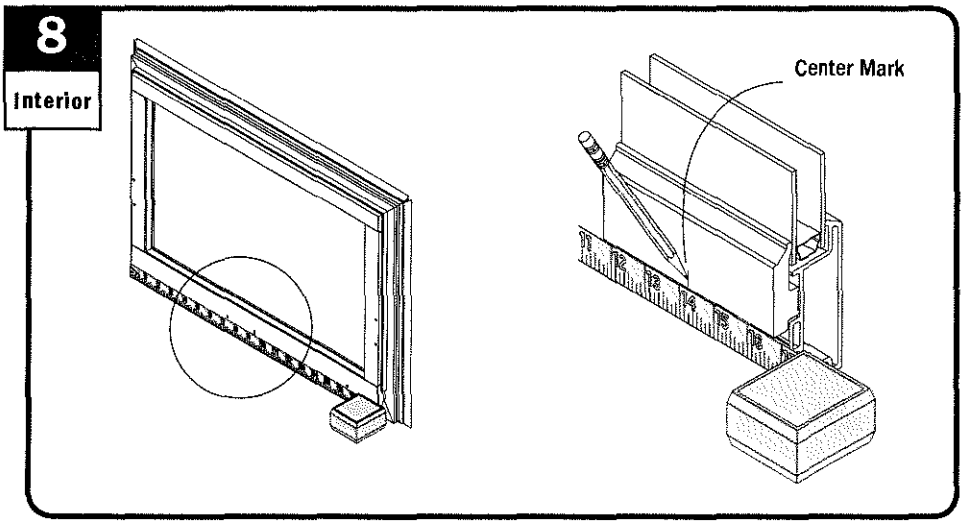

Measure and mark center of sash.

9
Interior

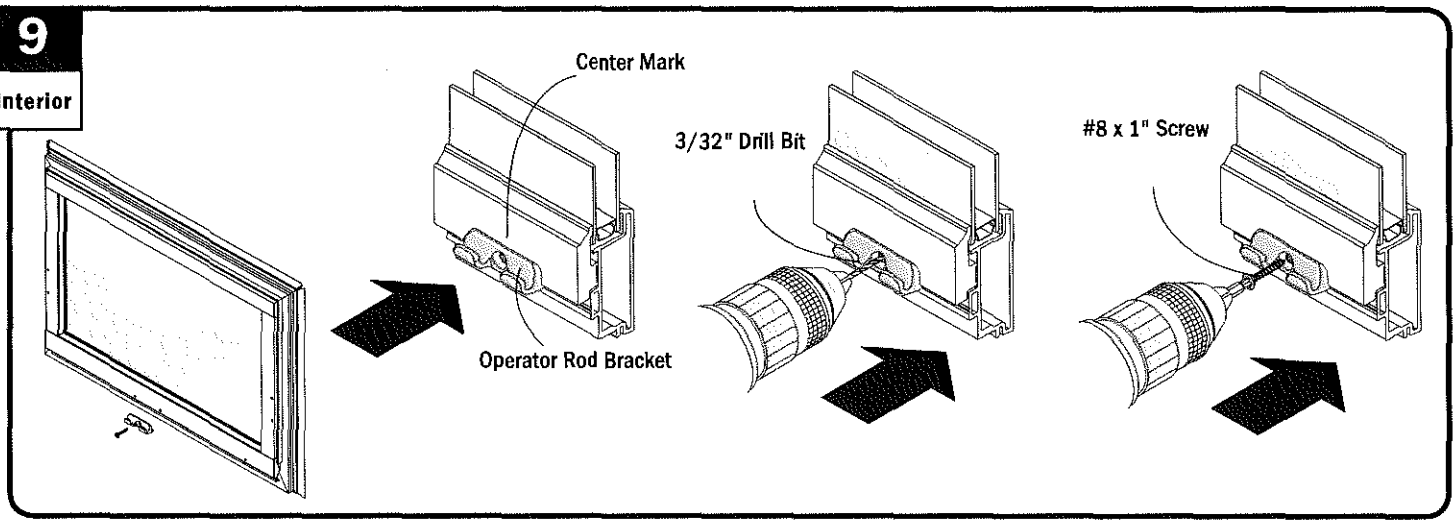

Position operator rod bracket tight to sash on center mark. Drill 3/32" hole, 1/2" deep using rod bracket as a guide and fasten bracket using #8 x 1" screw.

10
Interior

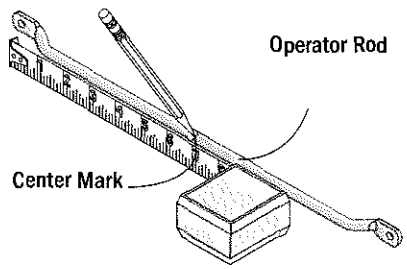

Measure and mark center of operator rod.

11
Interior

CAUTION

Operator rod must be oriented correctly or operator will not function. Failure to do so may result in product/property damage.

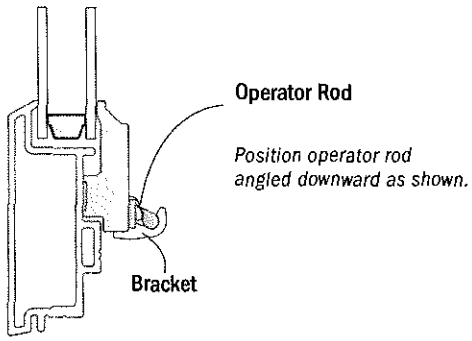

Cross Section Detail

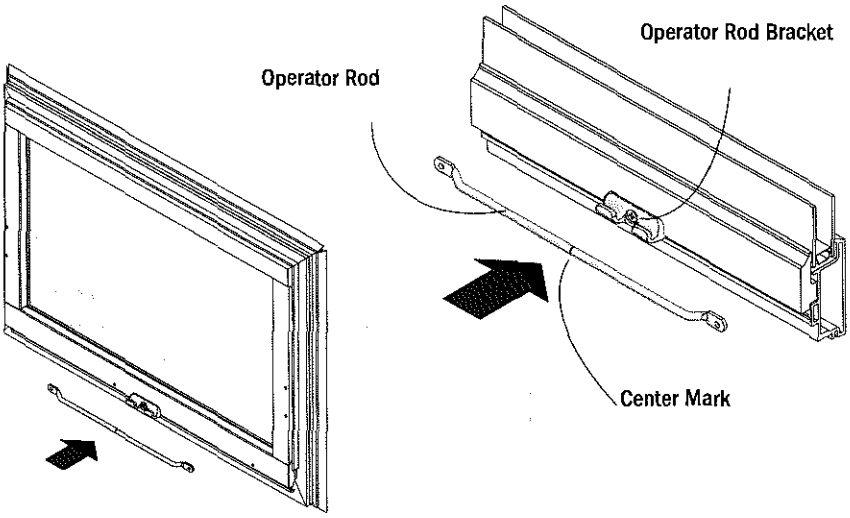

Align center marks and snap operator rod to bracket.

12

Interior

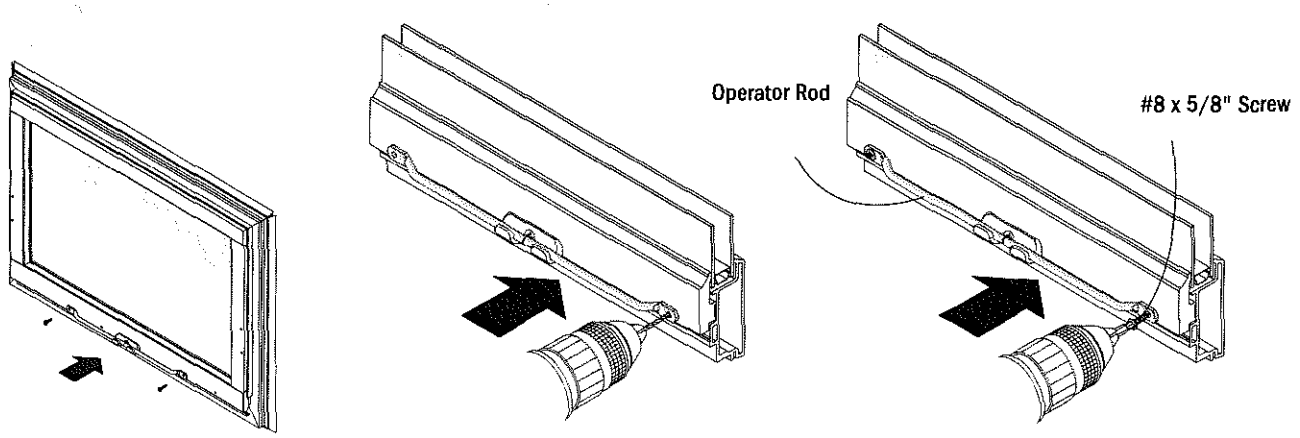

Drill 3/32" hole, 1/2" deep using operator rod as a guide and fasten using two (2) #8 x 5/8" screws.

13

Interior

IMPORTANT

If electric operator is not applied now, orange temporary operator clip must be attached to keep sash in closed position.

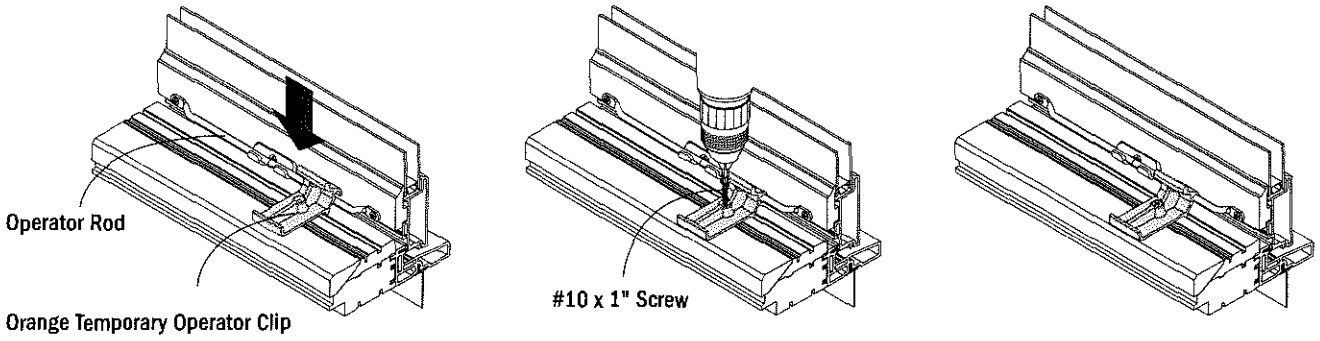

Attach orange temporary operator clip to operator rod and fasten to frame using #10 x 1" screw.

14

Interior

Units 42" and Wider Only

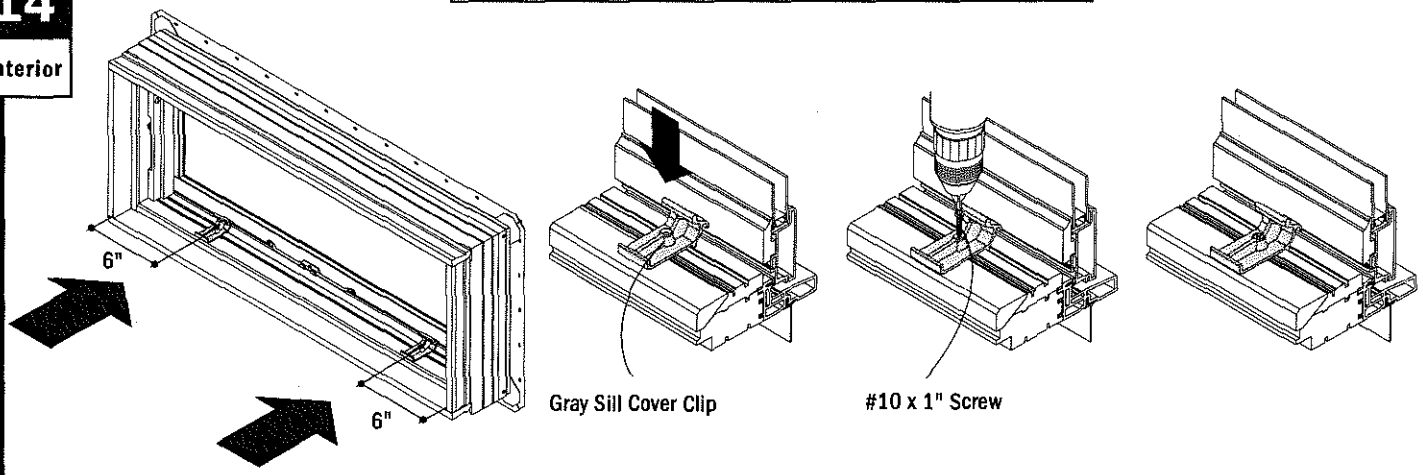

For units 42" or wider, position gray sill cover clips 6" from each side and fasten using #10 x 1" screw.

- **A-Series Retrofit Unit Preparation (manufactured after June, 2013) is complete.**
- **Proceed to Electric Operator Application Section.**

400 Series Retrofit Unit Preparation

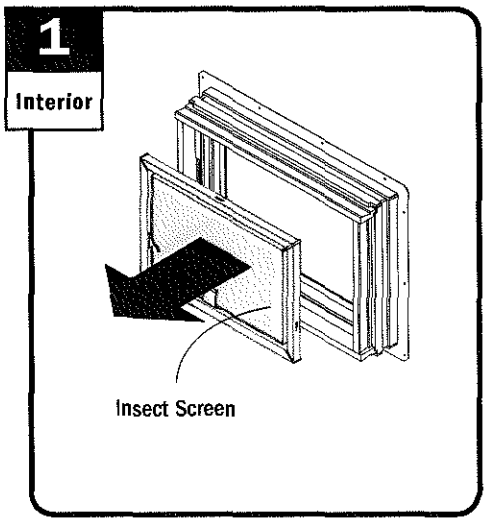

Remove insect screen.

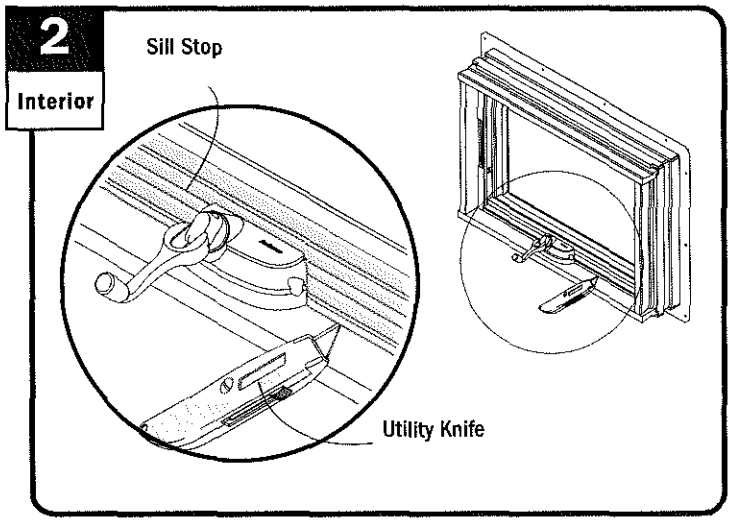

Break varnish or paint seal by scoring between sill stops and frame.

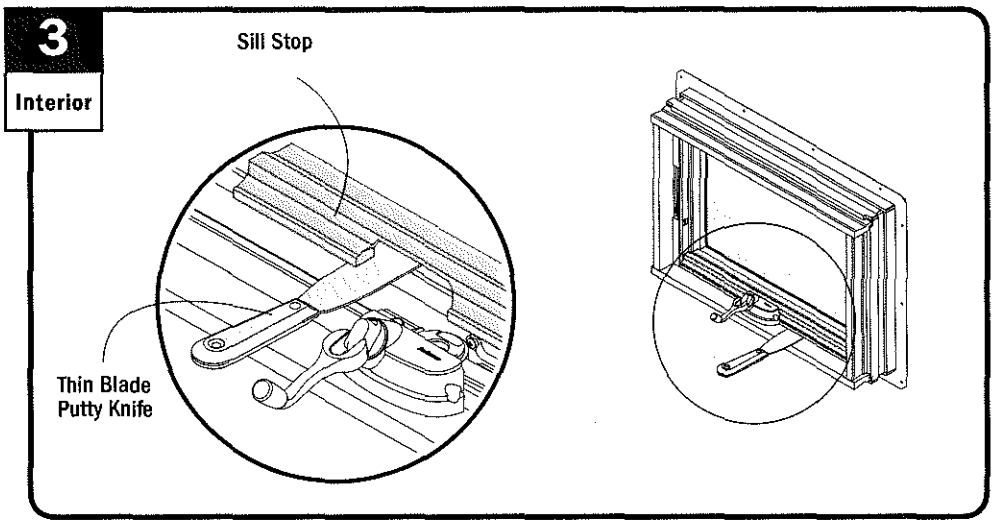

Remove sill stop using thin blade putty knife and dispose of properly.

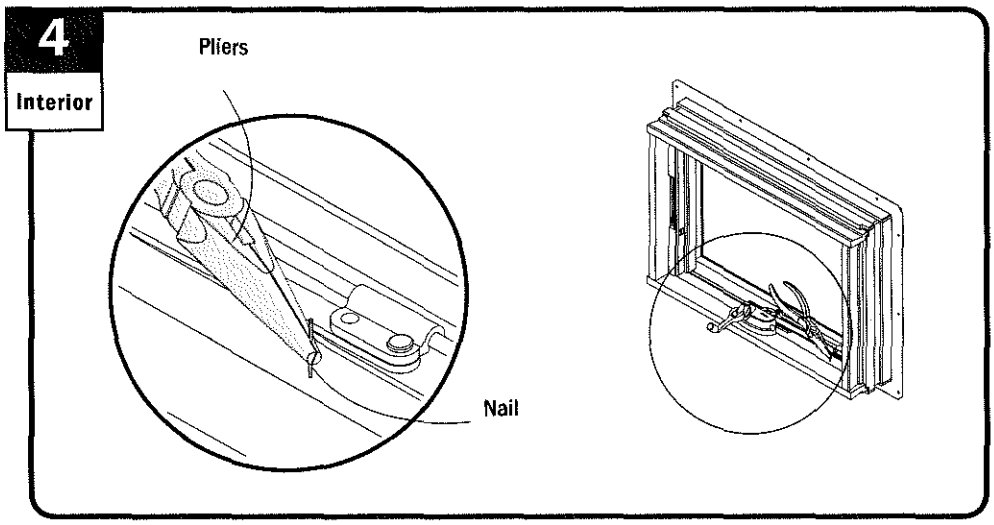

Remove nails at sill with pliers.

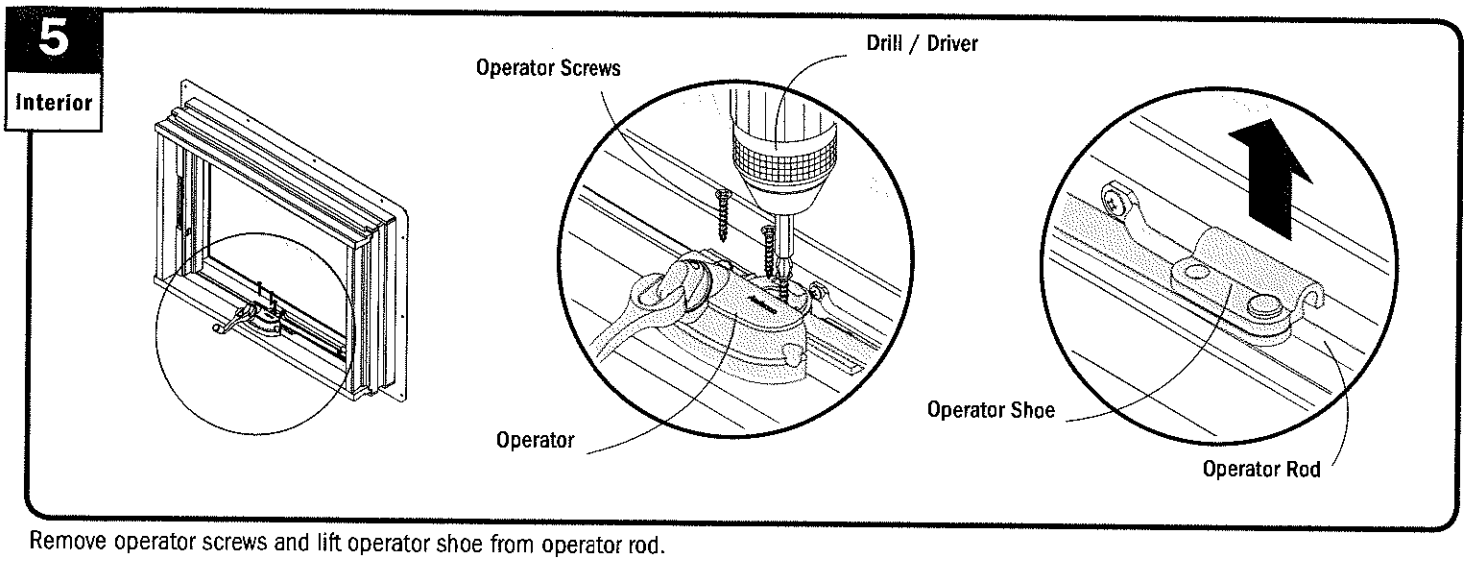

Remove operator screws and lift operator shoe from operator rod.

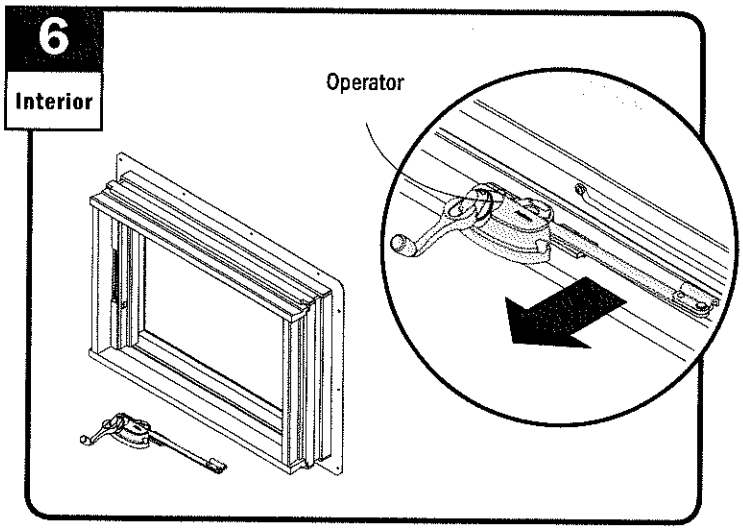

Remove operator and dispose of properly.

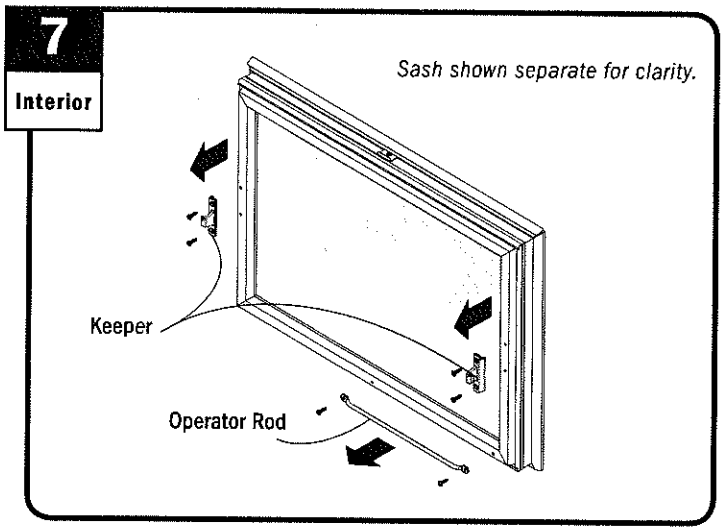

Remove keepers and operator rod and dispose of properly.

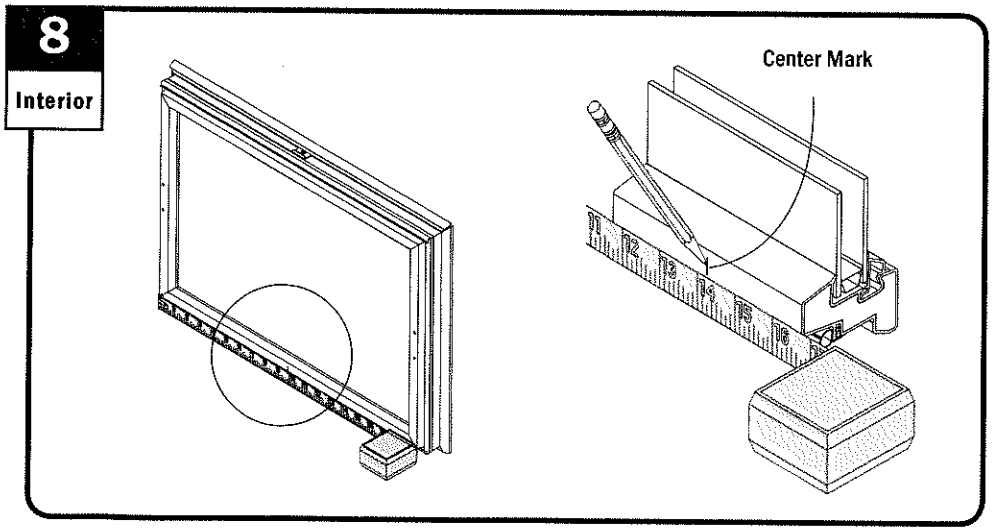

Measure and mark center of sash.

9
Interior

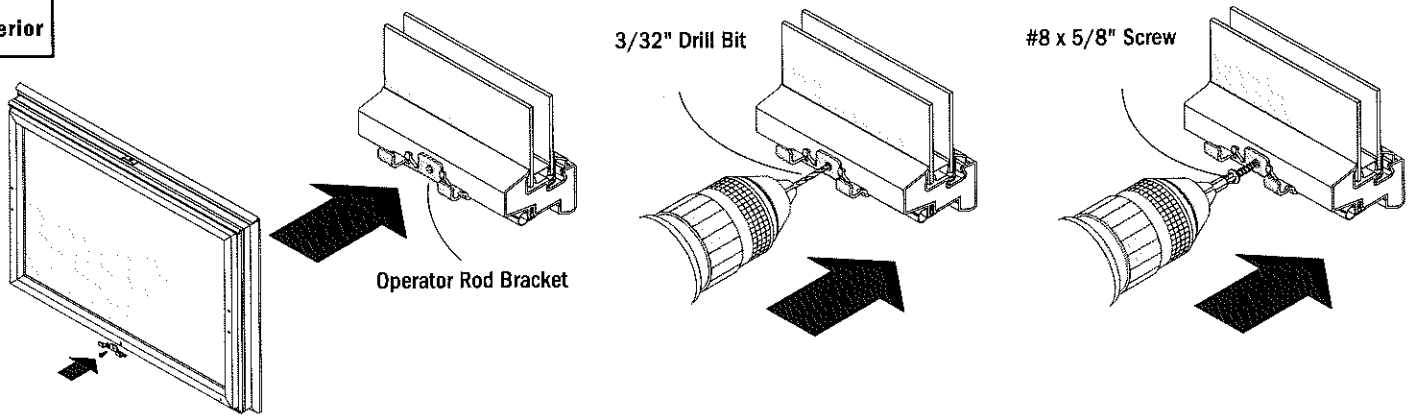

Position operator rod bracket tight to sash at center mark. Drill 3/32" hole, 1/2" deep using rod bracket as a guide and fasten bracket using #8 x 5/8" screw.

10
Interior

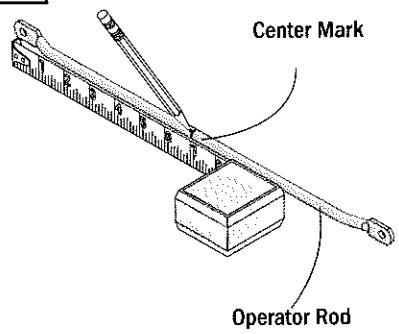

Measure and mark center of operator rod.

11
Interior

CAUTION

Operator rod must be oriented correctly or operator will not function. Failure to do so may result in product/property damage.

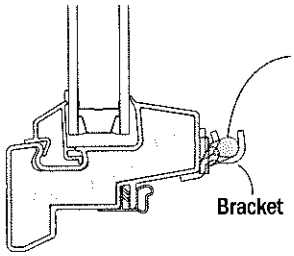

Position operator rod angled upward as shown.

Cross Section Detail

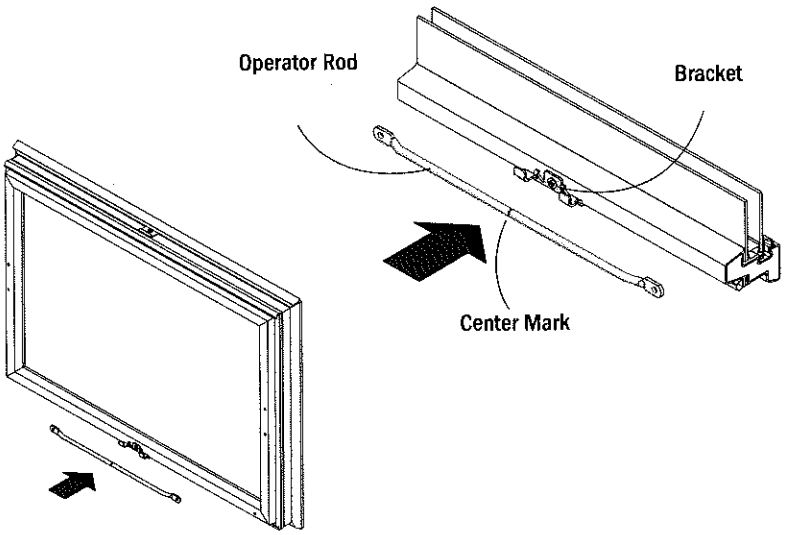

Align center marks and snap operator rod to bracket.

12 Interior

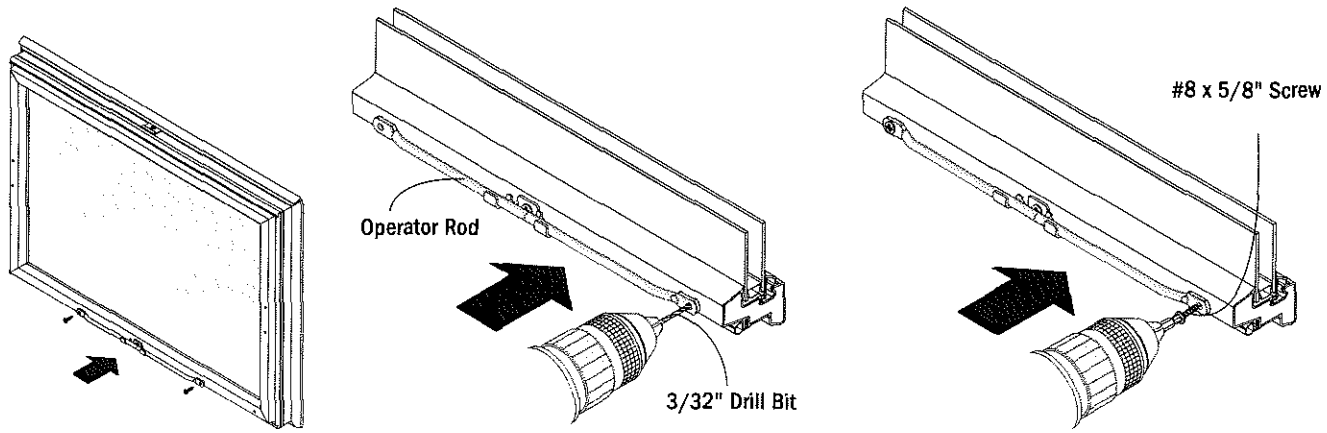

Drill 3/32" holes, 1/2" deep using operator rod as a guide and fasten using two (2) #8 x 5/8" screws.

13 Interior

IMPORTANT

If electric operator is not applied now, orange temporary operator clip must be attached to keep sash in closed position.

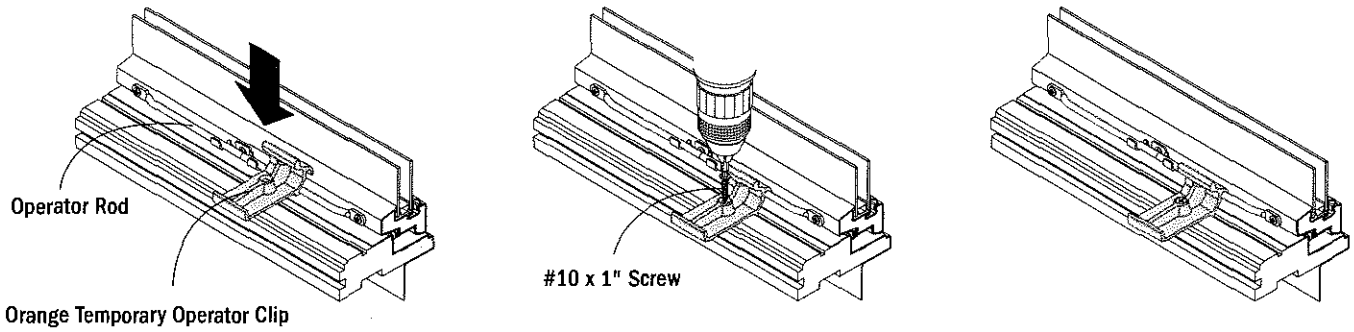

Attach orange temporary operator clip to operator rod and fasten to frame using #10 x 1" screw.

14 Interior

Units 42" and Wider Only

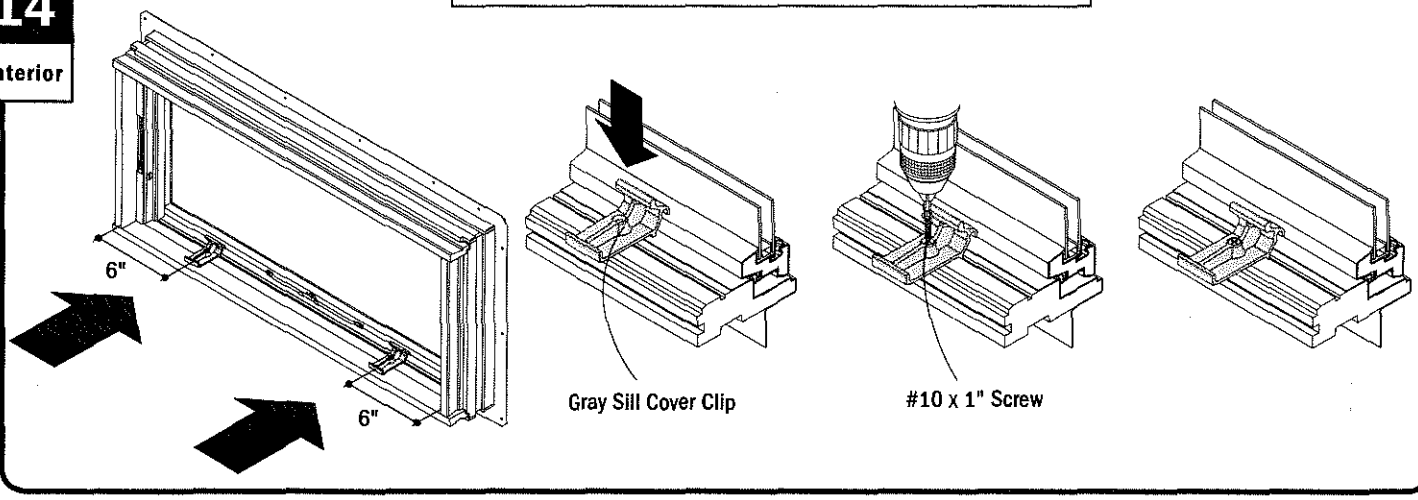

For units 42" or wider, position gray sill cover clips 6" from each side and fasten using #10 x 1" screw.

- **400 Series Retrofit Unit Preparation is complete.**
- **Proceed to Electric Operator Application Section.**

Electric Operator with PowerAssist™ Technology Programming Guide

Andersen WINDOWS • DOORS AW

for Andersen® A-Series Awning and Venting Transom and 400 Series Awning Windows

Thank you for choosing Andersen.

For questions call 1-888-888-7020. For more information and/or guides visit andersenwindows.com.

Please leave this guide with building owner.

- ***Read guide from beginning to end before starting installation. Read all warnings and cautions during unit installation.***
- ***Check with your local building code official to identify and confirm compliance with local building code requirements.***

Parts Included
(1) Console

Additional Andersen® Parts Sold Separately

(1) Remote Control

Tools Needed
- Paper Clip

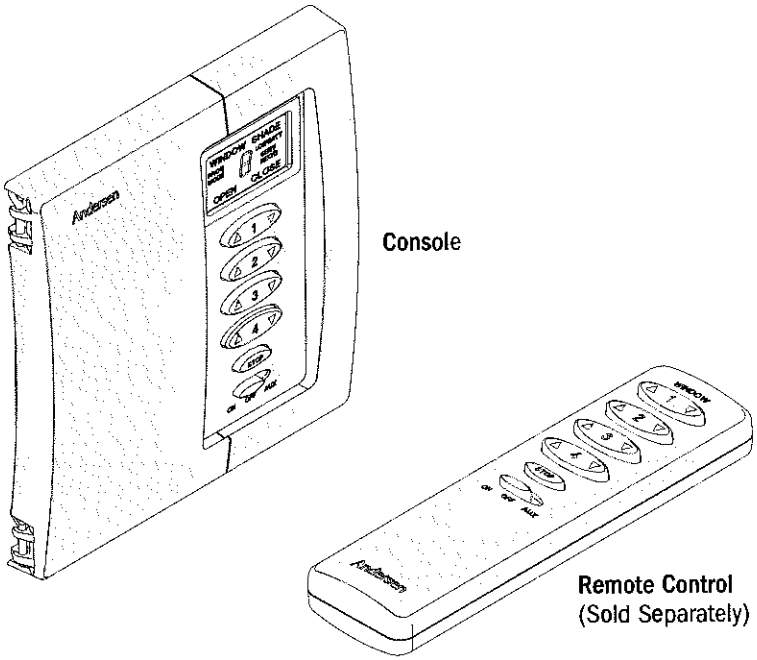

- **For console programming, go to page 33.**
- **For remote control programming (single window function), go to page 35.**
- **For remote control programming (multiple window/group mode function), go to page 37.**

⚠ WARNING

Use caution when working at elevated heights and around unit openings. Follow manufacturers' instructions for ladders and/or scaffolding. Failure to do so may result in injury or death.

⚠ WARNING

Follow manufacturers' instructions for hand or power tools. Always wear safety glasses. Failure to do so may result in injury and/or product damage.

"Andersen" and all other marks where denoted are trademarks of Andersen Corporation. ©2013-2013 Andersen Corporation. All rights reserved.

1

Interior

If insect screen is not present, insect screen sensor must be depressed for electric operator motor to operate.

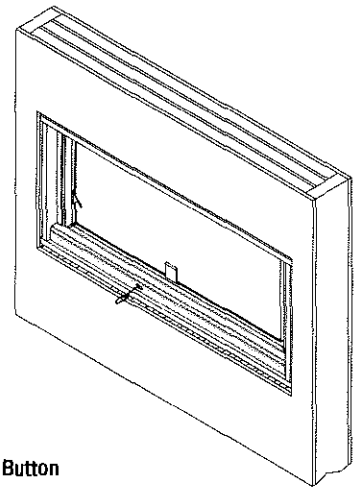

Insect Screen Sensor

Program Button

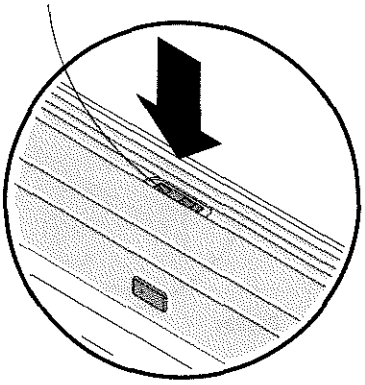

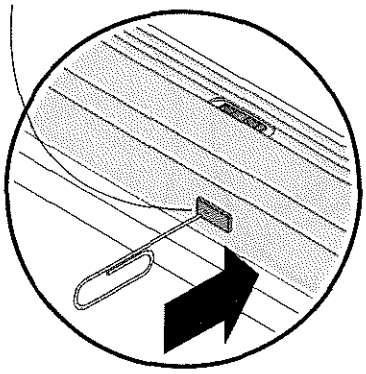

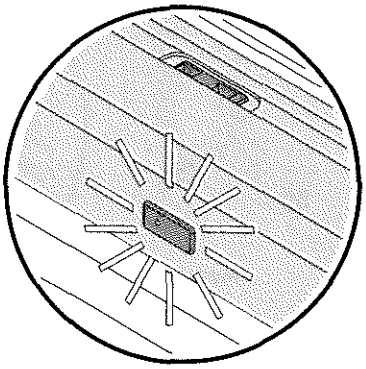

With Sill Cover in Place

Insect Screen Sensor

Program Button

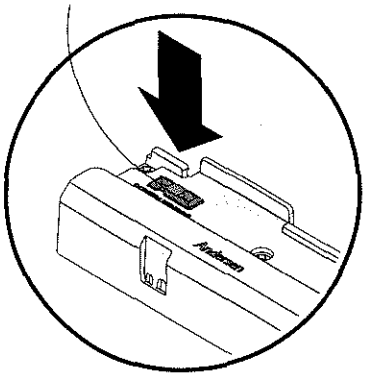

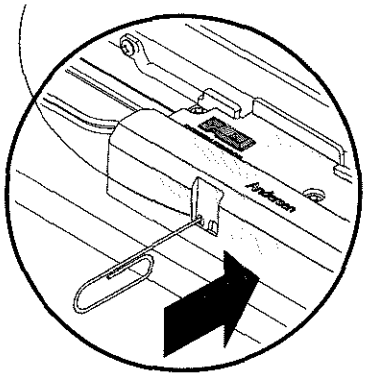

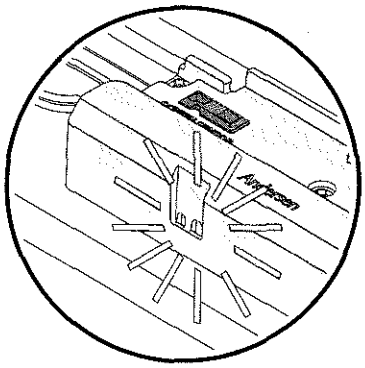

Without Sill Cover in Place

Press and hold insect screen sensor and insert a paper clip into the window program button on the electric operator until red light starts blinking.

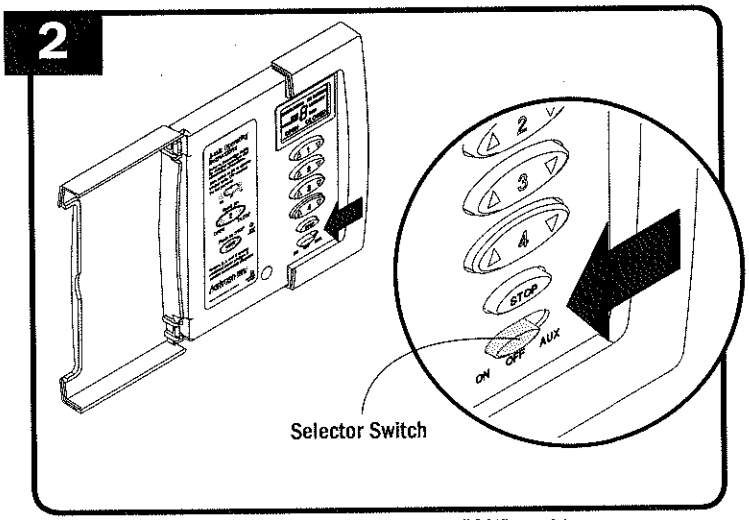

Move selector switch on console key pad to "ON" position.

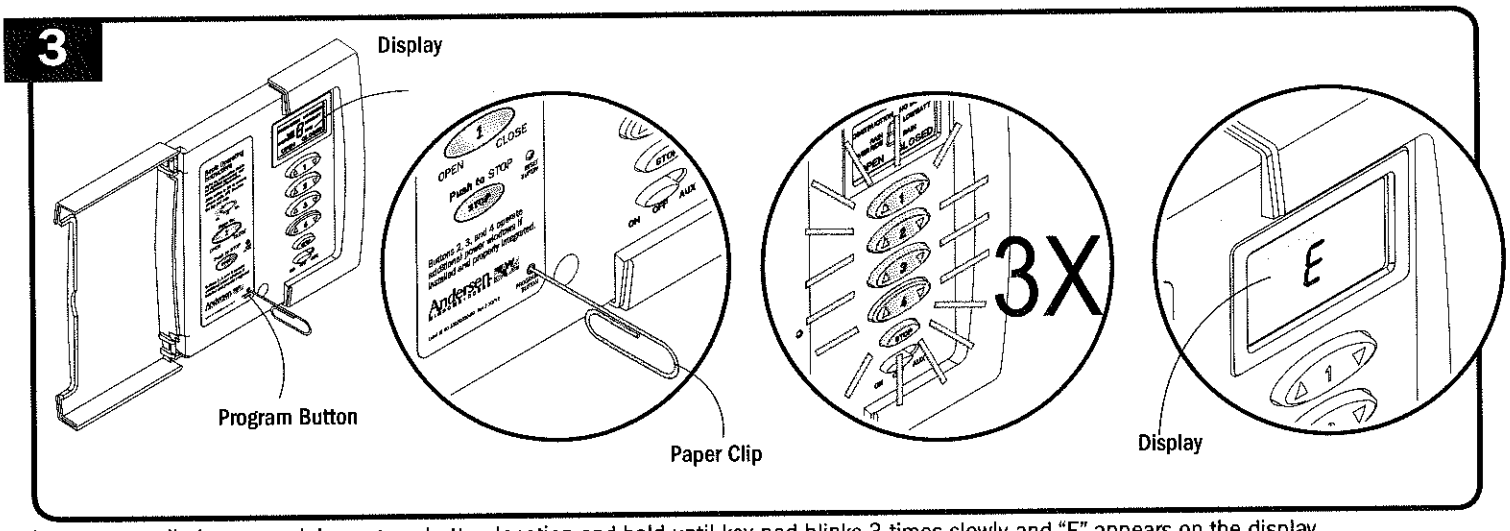

Insert paper clip into console's program button location and hold until key pad blinks 3 times slowly and "E" appears on the display.

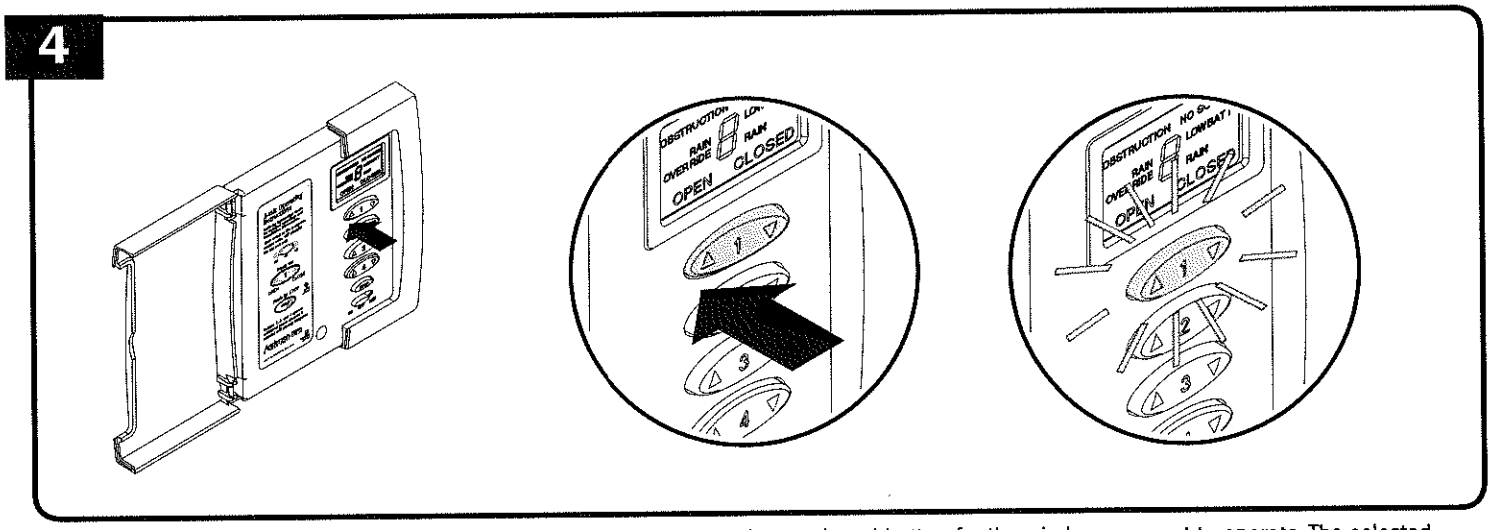

Select console keypad button (1, 2, 3, or 4) and press "Open" (△) on the numbered button for the window you want to operate. The selected numbered button will blink 3 times quickly, and the red window operator light will stop blinking when the operator is programmed. If red light on the operator sill cover remains blinking, repeat steps 2-4 until operator is programmed.

- **Repeat steps 1, 3-4 to program up to four windows./**
- **Console programming procedure is complete./**

Remote Control Programming (Single Window Function)

1

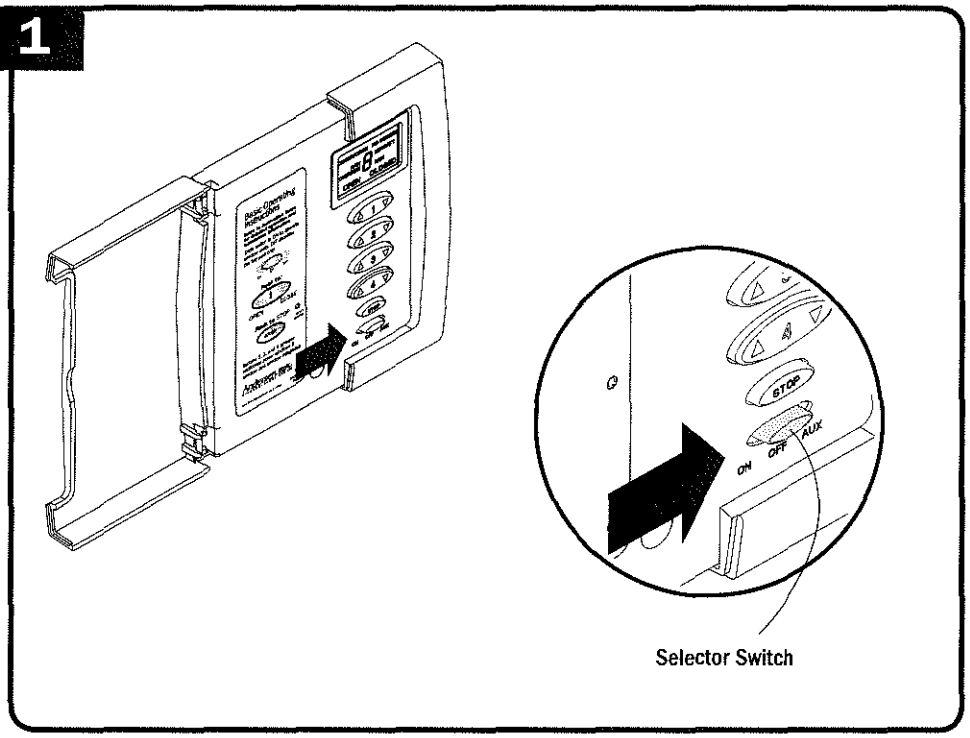

Move selector switch on console to the "OFF" position.

2

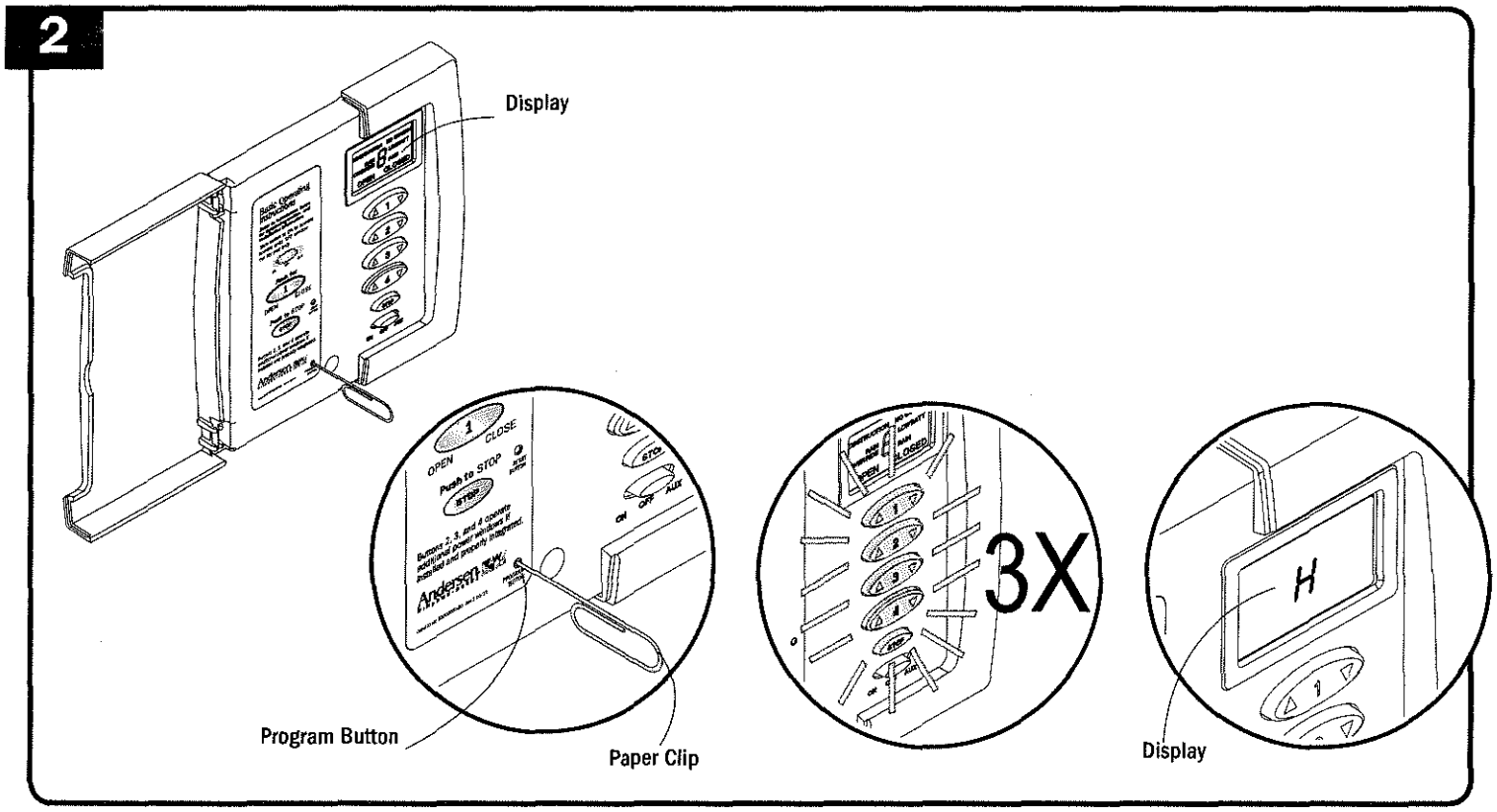

Insert paper clip into program button location and hold until console key pad blinks 3 times slowly and "H" appears on the display.

3

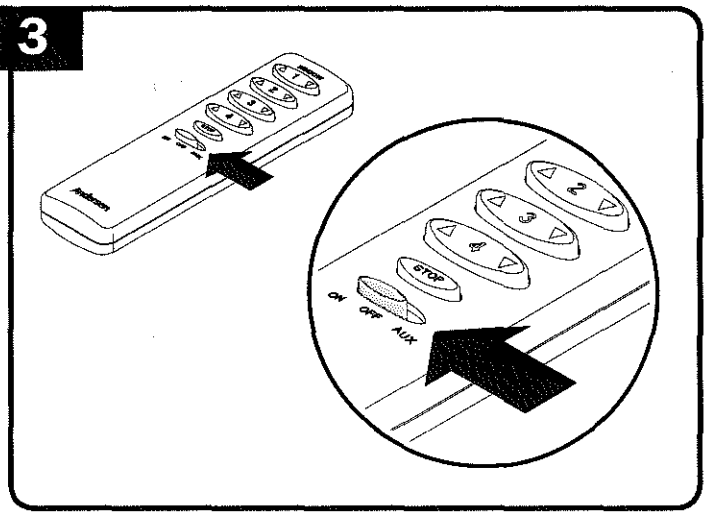

Move selector switch on remote control to the "ON" position.

4

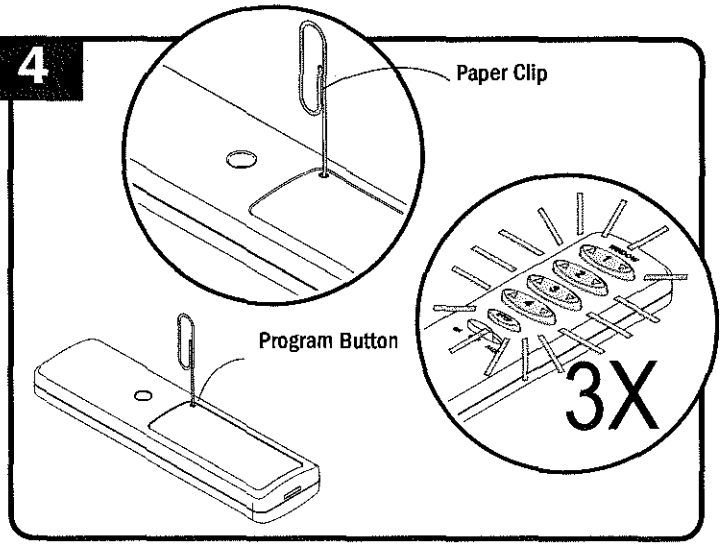

Insert paper clip into program button location and hold until remote control key pad blinks 3 times slowly, then remove paper clip.

5

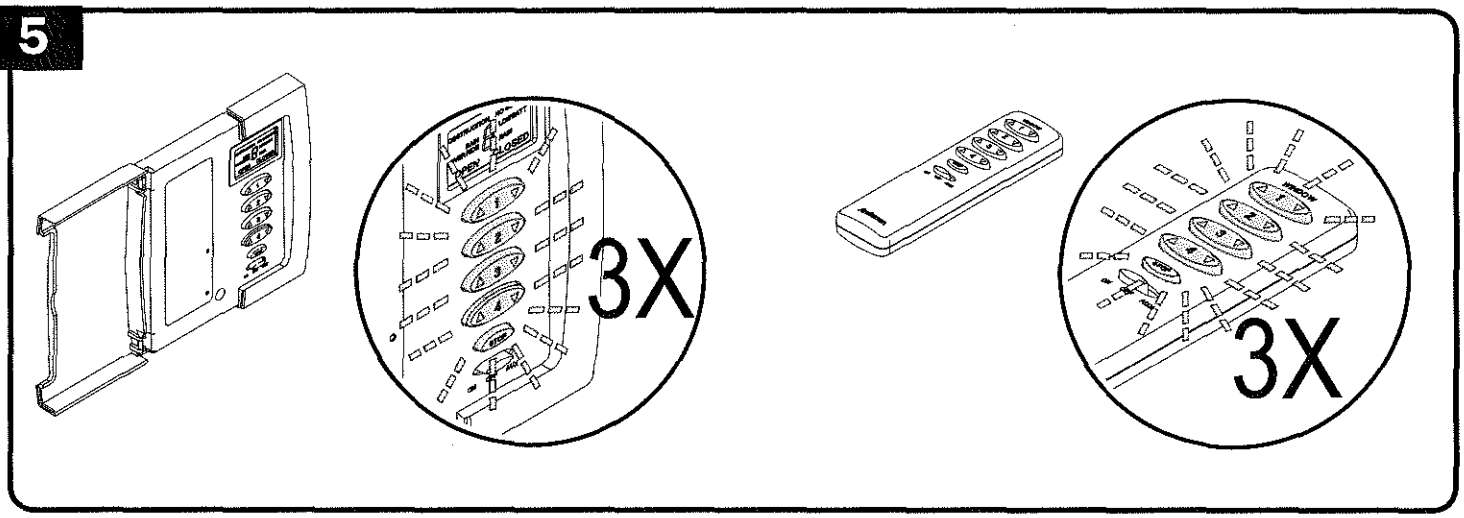

After short delay, both remote control and console key pads will blink 3 times quickly, and the remote control will be programmed to the console. If both keypads do not blink 3 times quickly, wait for console to stop blinking and repeat steps 2-5 until remote control is programmed.

6

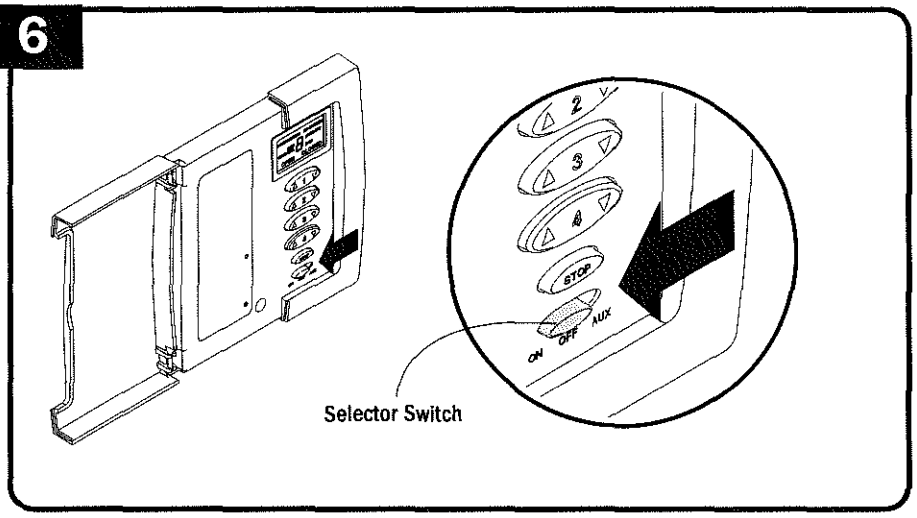

Move selector switch on the console to the "ON" position to return to normal operating mode.

- Remote control programming (single window function) procedure is complete.
- For remote control programming (multiple window/group mode function) proceed to step 7.

Remote Control Programming (Multiple Window/Group Mode Function)

► Must complete remote control programming (single window function) - steps 1-6 first.

7

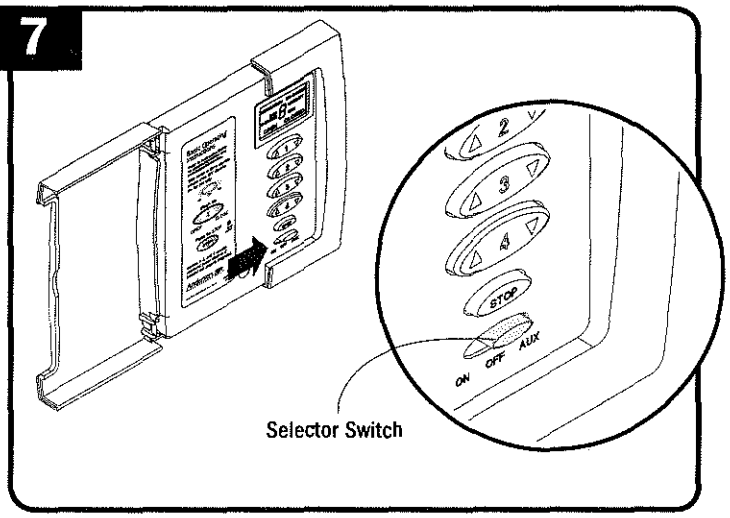

Move selector switch on key pad to "AUX" position.

8

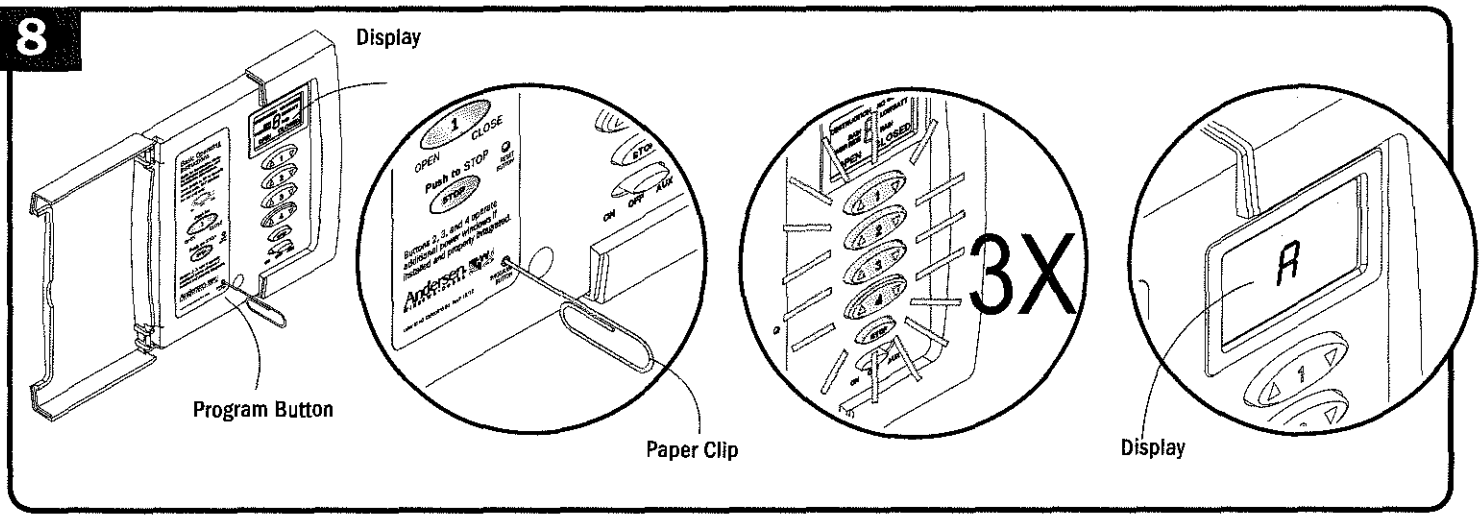

Insert paper clip into console's program button location and hold until key pad blinks 3 times slowly and "A" appears on the display.

9

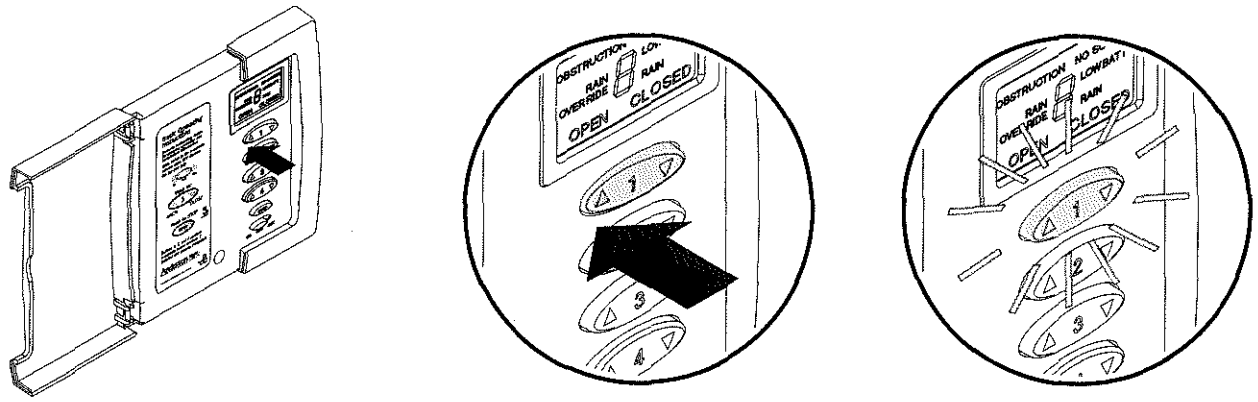

Select console keypad button (1 and/or 2 and/or 3 and/or 4) and press "Open" (△) on the numbered button for the windows you want to operate in group mode. The selected numbered button will stay lit when programmed. Press lit button again to deselect.

10

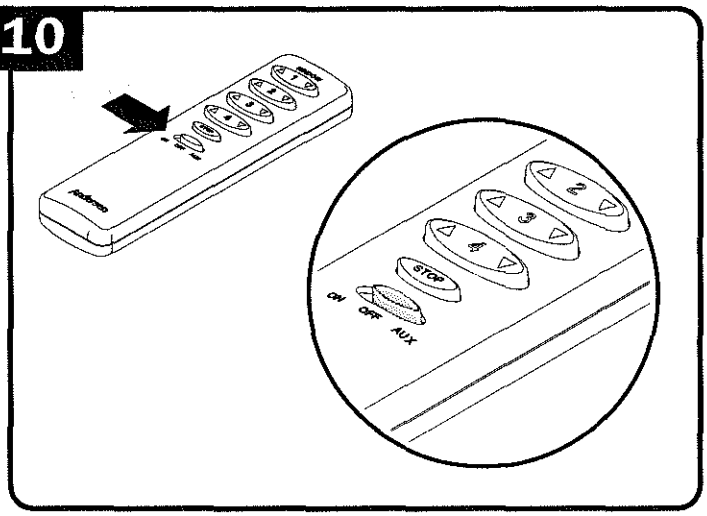

Move selector switch on remote control to the "AUX" position.

11

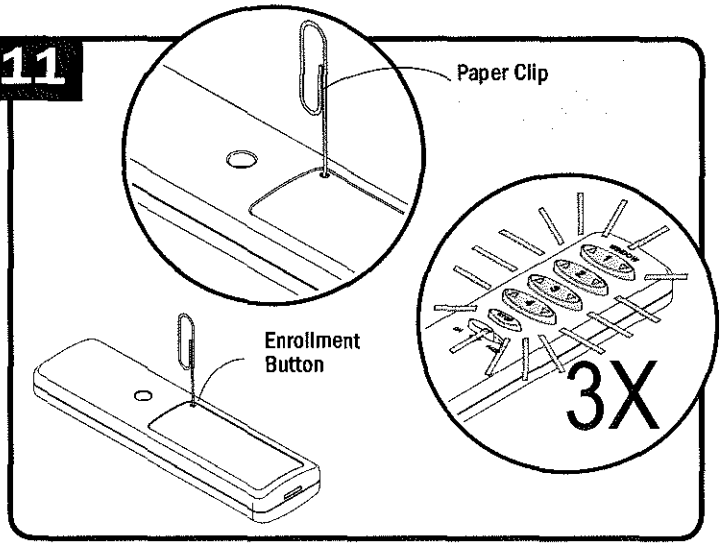

Insert paper clip into enrollment button location and hold until remote control key pad blinks 3 times slowly, then remove paper clip.

12

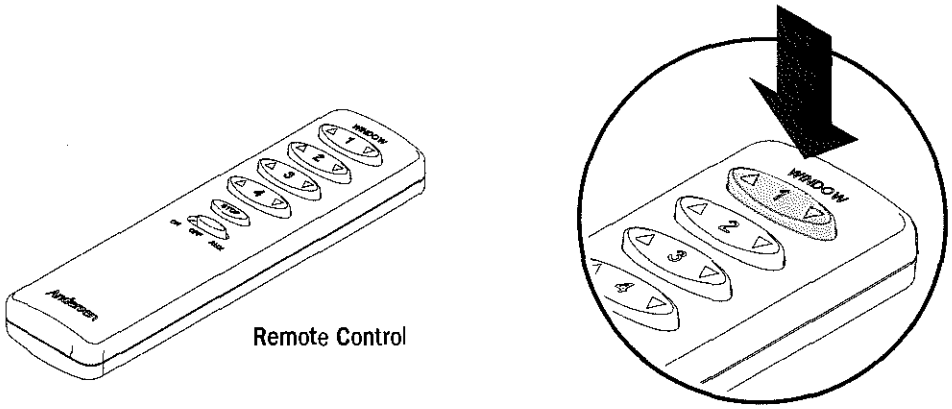

Push one numbered button on remote key pad to control console selected group of windows.

13

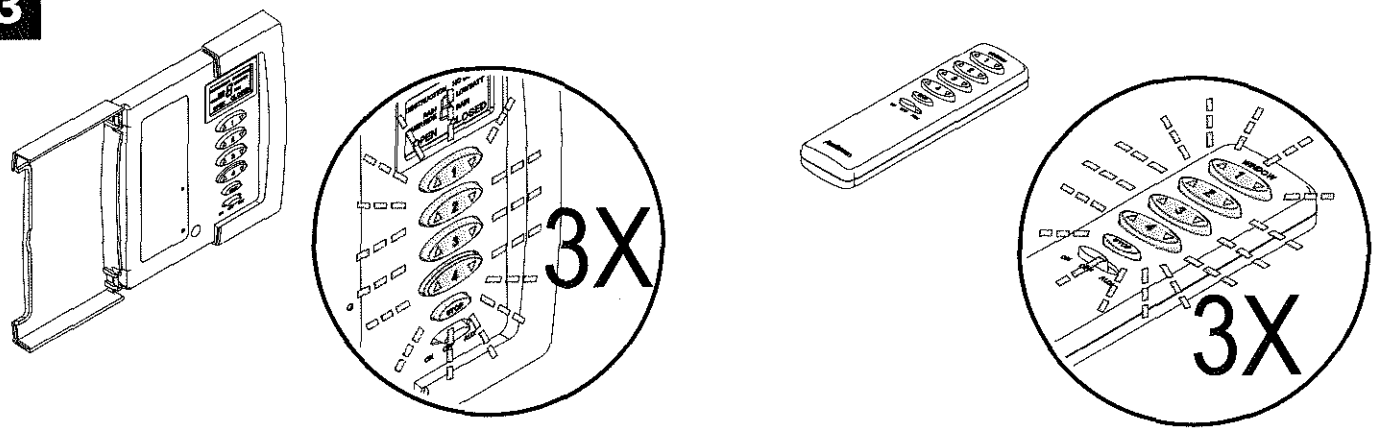

After selecting remote control button, both remote control and console key pads will blink 3 times quickly, and the remote control will be programmed to the group of windows defined on the console. If both keypads do not blink 3 times quickly, wait for console to stop blinking and repeat steps 11-13 until remote control is programmed.

► **Remote control programming (multiple window/group mode function) procedure is complete.**

1

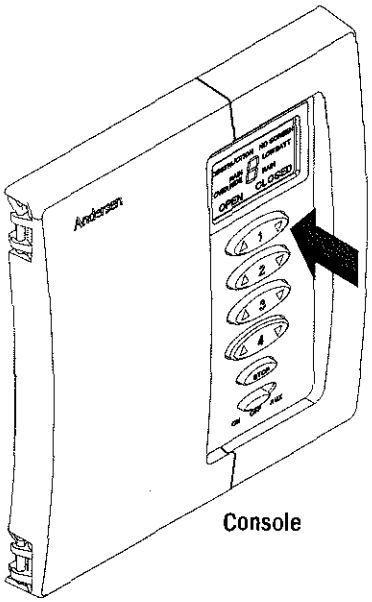

Console

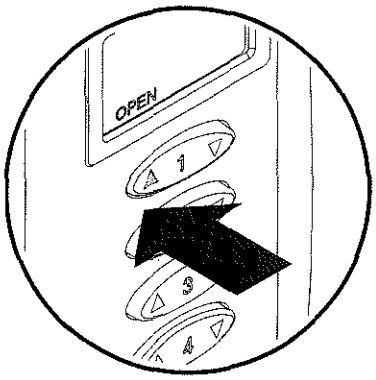

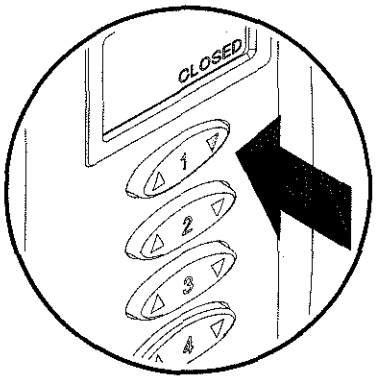

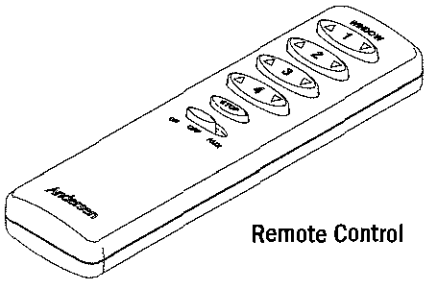

Remote Control

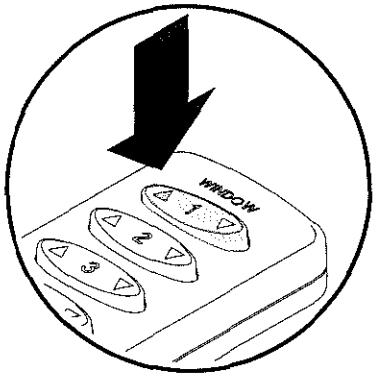

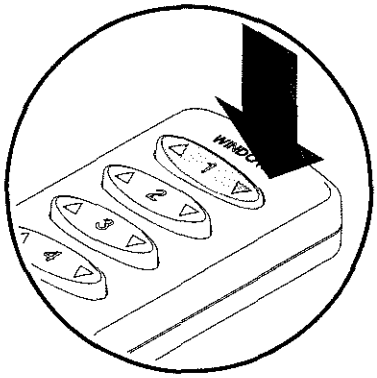

Push (△) on numbered button on key pad to open window. Display will light and window will open until stop button is pushed or window is fully opened. Push and release (▽) to close window.

Manual Closing Procedure

► **If electric operator will not close or a loss of power occurs, Follow these steps before calling for service at 1-888-888-7020.**

1 Interior

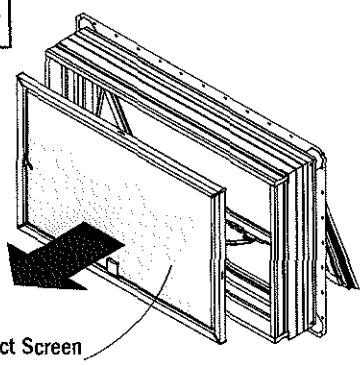

Remove insect screen and set aside.

2 Interior

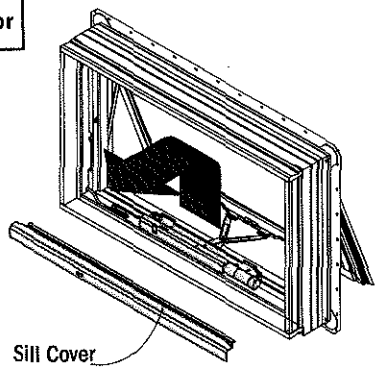

Remove sill cover and set aside.

3 Interior

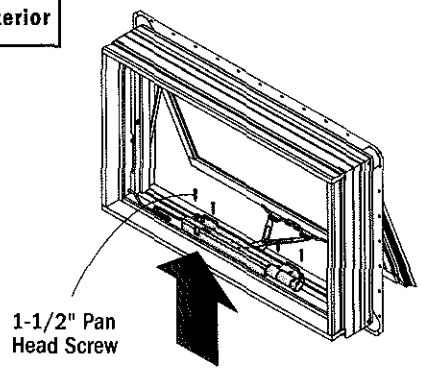

Remove four (4) 1-1/2 pan head screws from electric operator and save for reuse.

4 Interior

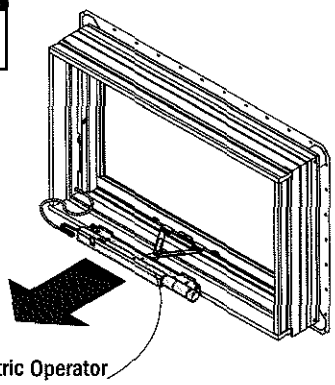

Pull electric operator and sash to interior, tight against frame to its closed position.

5 Interior

CAUTION

Do not screw into extension jambs. Failure to do so will result in product/property damage.

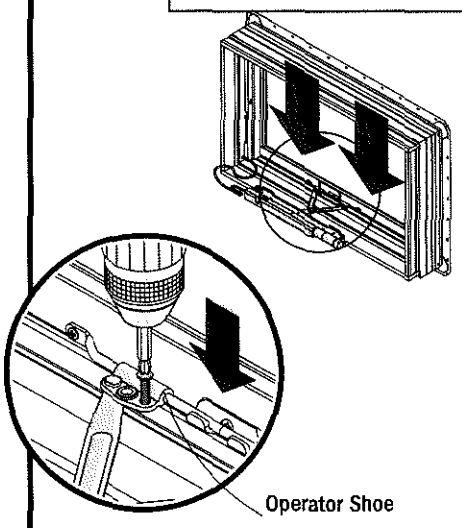

Install temporary screw through open hole in operator shoe clips to frame.

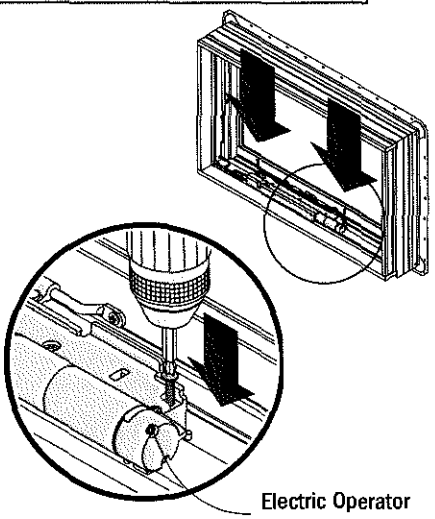

If shoe clip holes are not accessible, install temporary screws through two outer open holes in electric operator to frame.

Install two temporary screws through shoe clips or electric operator to window frame. Call service at 1-888-888-7020.

IMPORTANT

For application in individually framed single windows.

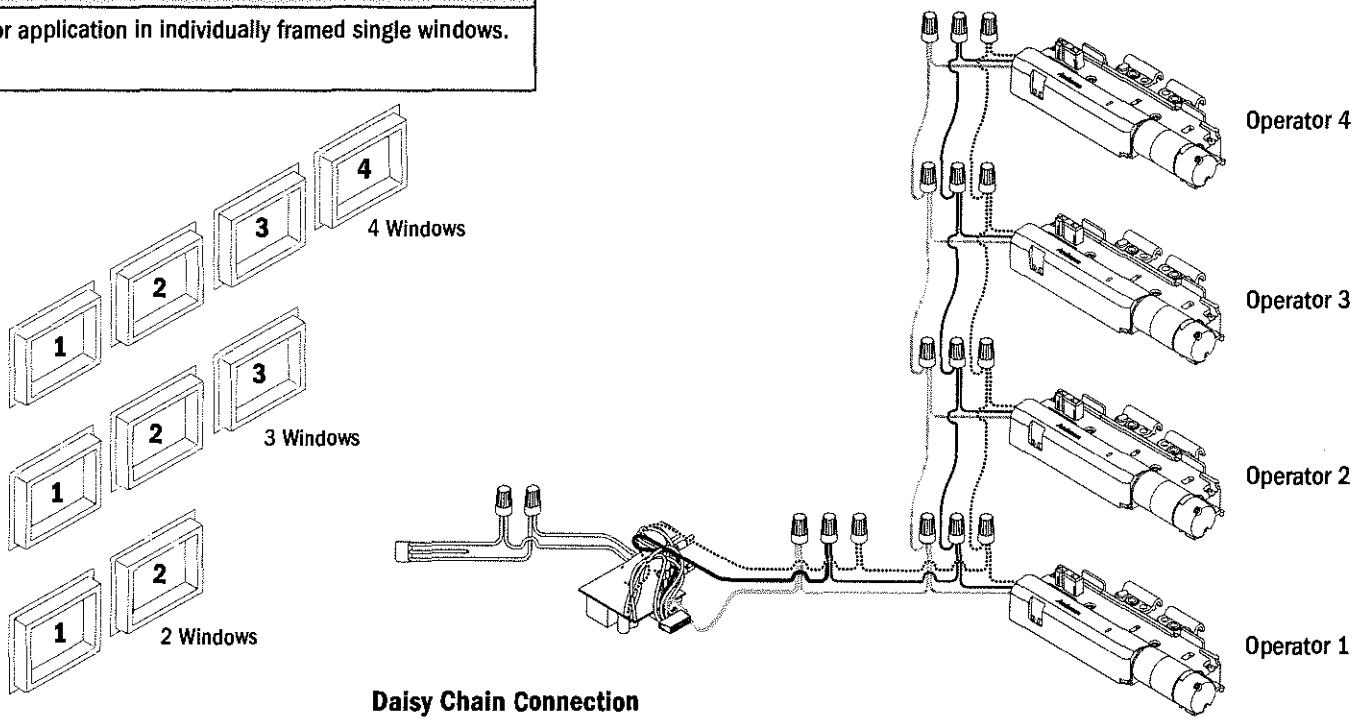

Daisy Chain Connection

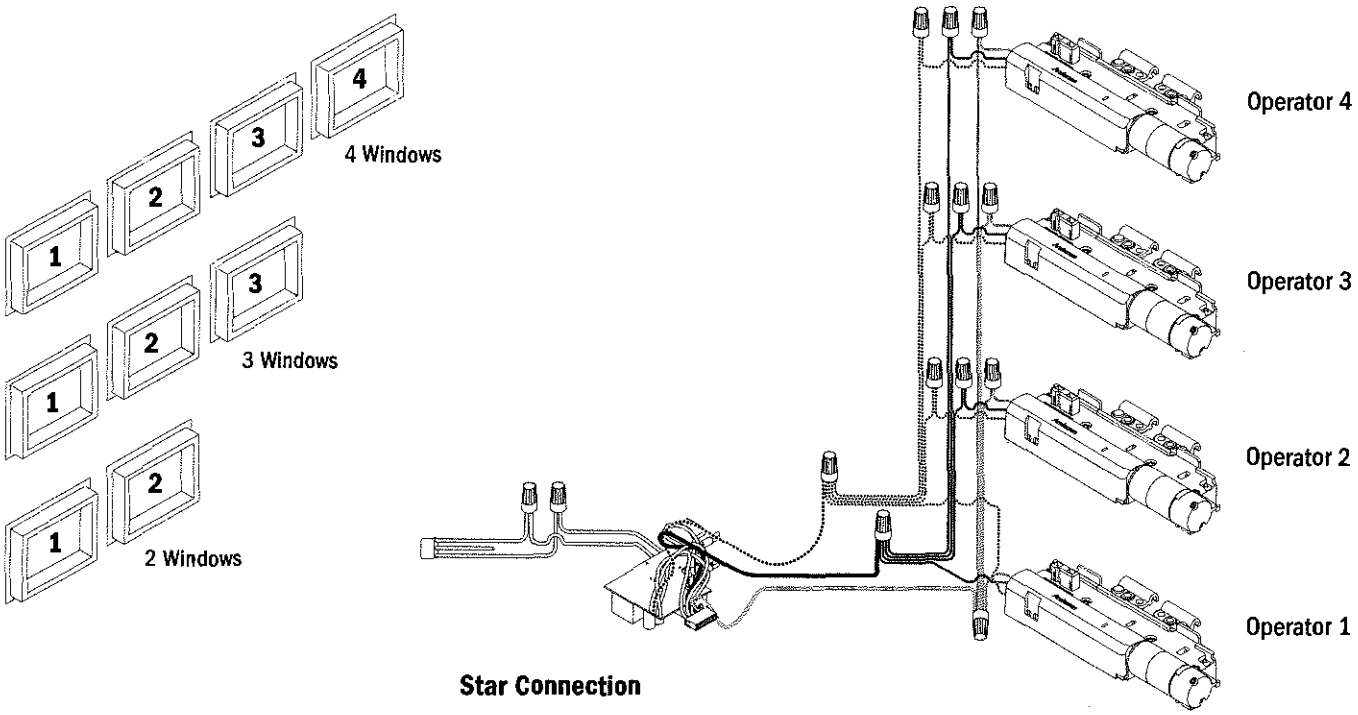

Star Connection

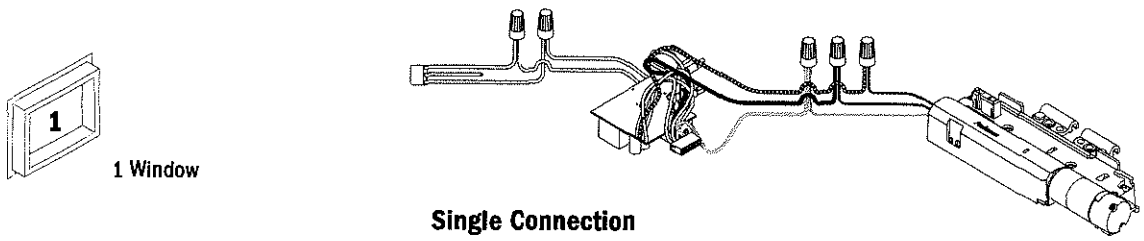

Single Connection

⚠ WARNING

Must use UL approved wire or motor damage may occur. Failure to do so may result in injury and/or product/property damage.

CAUTION

Do not apply electric operator in coastal environments. Product damage may result.

WIRE GAGE /

Wire Size (Class 2)	Total Distance from Power Box to Driver
18 AWG	50 feet
16 AWG	75 feet
14 AWG	100 feet
12 AWG	150 feet

TEMPERATURE AND VOLTAGE MIN/MAX /

Temperature Range	-20° F to +150° F
Voltage	11-13 Volts /

RESTRICTIONS /

Awning Unit	Min/Max Width
400 Series	24.125" to 59.875"
A-Series	25.250" to 59.250"

Andersen RS485 Protocol /

Version History /

2013-04-15 First draft /

Overview /

The network consists of a single Controller and possibly several Consoles all connected via wires on an RS485 bus.
Each Console controls up to four windows over a wireless link.

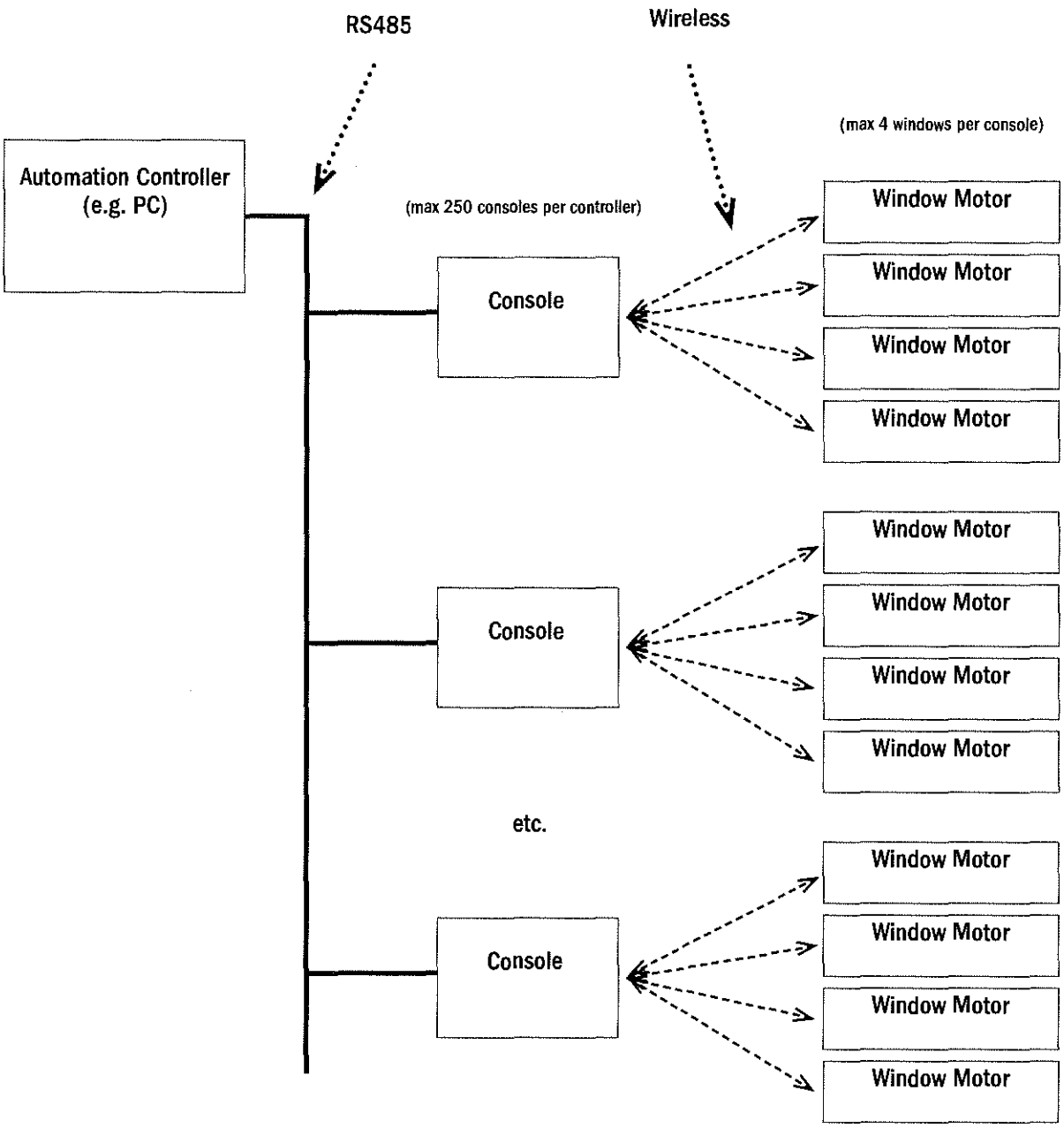

Console Addresses /

Each Console needs a unique RS485 address. The address is a single byte and can have values from decimal 1 to decimal 250. When programming the address the address value is displayed "bit-wise" on the console's keypad - with each bit mapped to a [window open] or [window close] button LED as shown in these examples:

Address (decimal)/	Open 4	Open 3	Open 2	Open 1	Close 4	Close 3	Close 2	Close 1
1	off/	off/	off/	off/	off/	off/	off/	ON/
2	off/	off/	off/	off/	off/	off/	ON/	off/
3	off/	off/	off/	off/	off/	off/	ON/	ON/
4	off/	off/	off/	off/	off/	ON/	off/	off/
5	off/	off/	off/	off/	off/	ON/	off/	ON/
16	off/	off/	off/	ON/	off/	off/	off/	off/
35	off/	off/	ON/	off/	off/	off/	ON/	ON/

Steps for programming a Console's Address:

1- Move the console's 3-position selector switch to the OFF position
2- Press and hold the STOP button for ~5 seconds
3- LEDs will flash 3 times
4- LCD displays "C" to represent "Communications" in seven segment form
5- Set the address per the mapping shown above by pressing the open and close buttons to toggle the LEDs
6- The address will be accepted when the LEDs flash 3 times after no keys have been pressed for 10 seconds

The address is stored in non-volatile EEPROM

General Bus Information

- 9600 baud * 8 data bits * No parity bit * 1 stop bit
- Controller is master * Consoles are slaves
- The checksum is the simple summation of all bytes excluding the starting 0xFF and the checksum byte
- All RS485 commands get an immediate RS485 response. OPEN or CLOSE will get either a BUSY or ACK. STATUSWITHPOLL will get either a BUSY or STATUS response.
- Window # "5" means "all four windows on the console"

Bus Messages

Command from Controller to Console

- Byte 1: Host Address (0xFF)
- Byte 2: Destination Console Address
- Byte 3: Window number. Options are {1, 2, 3, 4, 5}. 5 means ALL.
- Byte 4: Command. Options are {STATUSWITHPOLL, STATUSWITHOUTPOLL, OPEN, CLOSE, STOP}
- Byte 5: Checksum

Responses from Console to Controller

Console replies with "ACK" to commands OPEN, CLOSE, STOP

- Byte 1: Host Address (0xFF)
- Byte 2: Source Console Address
- Byte 3: ACK (0xB1)
- Byte 4: Echo of the command that was sent
- Byte 5: Checksum

Console replies with "BUSY" if it cannot complete the request now due to an operation already in progress

- Byte 1: Host Address (0xFF)
- Byte 2: Source Console Address
- Byte 3: BUSY (0x27)
- Byte 4: Echo of the command that was sent
- Byte 5: Checksum

Console replies with single window status if status was requested for window 1, 2, 3 or 4

- Byte 1: Host Address (0xFF)
- Byte 2: Source Console Address
- Byte 3: STATUS
- Byte 4: Status byte of window requested
- Byte 5: Checksum

Console replies with multiple window status if status was requested for window 5

- Byte 1: Host Address (0xFF)
- Byte 2: Source Console Address
- Byte 3: STATUS
- Byte 4: Status byte of window 1
- Byte 5: Status byte of window 2
- Byte 6: Status byte of window 3
- Byte 7: Status byte of window 4
- Byte 8: Checksum

Status byte definition

bit #	Meaning	Note
0	1 = Window is Open	
	0 = Window is Closed	
1	1 = Window movement is obstructed	The obstruction is flagged for both directions of attempted window movement
2	1 = Window insect screen is missing	
3	1 = Console heard from window over the RF channel	
4	1 = Rain was sensed at the window	Only gets set if the window is open
5	1 = Rain Override Active	Normally the system will auto-close windows if rain is detected. The user can "override" this feature to keep the windows open, such as if the user knows any rain present is very light rain.
6	not defined	
7	not defined	

Command/Response byte definitions

Command (hex)	Name	Usage	Example	Example Bytes
55	OPEN/	Command used to open a window or windows		
AA	CLOSE/	Command used to close a window or windows	Example to close window 1 on console 1:	FF 01 01 AA AC
5A	STATUSWITHPOLL	Command used to request window status. Console will request the latest window status by querying windows over the RF communication channel.	Example to get status for all windows on console 1:	FF 01 05 A5 AB
A5	STOP	Command used to tell the window to stop moving. The STOP command should always go through and should therefore never receive a BUSY response.		
5C	STATUSWITHOUTPOLL	Command used to request window status without querying the windows over the RF channel. The console will simply reply with the latest cached status.	Example to get status for all windows on console 1:	FF 01 05 5C 62
27	BUSY	Reply sent by the console if it cannot complete the command due to a previous command that is in progress.		
B1	ACK	Reply sent by the console to commands such as STOP, OPEN and CLOSE. E.g. when the console gets a command to open window 2 then the console will ACK this command and then send the RF command to the window. It may take up to 20 seconds for the operation to conclude. It is the controller's responsibility to request status later to confirm the correct window state has been attained.		
other	not defined			

This page has been intentionally left blank.

Operation Codes

Use these codes to help trouble shoot power window problems. Refer to the instruction guide for detailed application and operation guidelines. Call Andersen at 1-888-888-7020 for further assistance.

LOW BATT lights up to designate battery may need to be charged or replaced. Power window is using AC power source only.

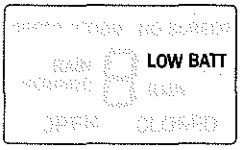

OPEN lights up to designate window is open or in the operation of opening. (Units 1-4)

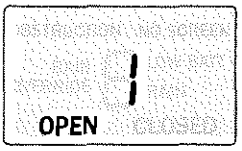

CLOSED lights up to designate window is closed or in the operation of closing. (Units 1-4)

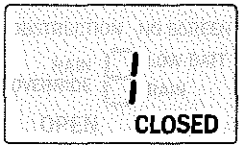

NO SCREEN lights up to designate that no insect screen is present. Power window will not operate until insect screen sensor is fully depressed. (Units 1-4)

OBSTRUCTION lights up to designate power window has detected an obstruction and will not fully open or close. (Units 1-4)

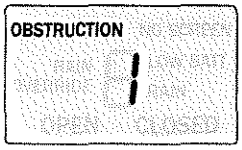

RAIN lights up to designate window will close due to rain or condensation.

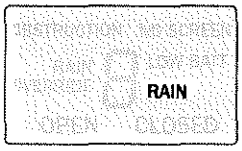

RAIN OVERRIDE lights up to designate override has been activated. Rain override stays on and window will remain open until timer expires. If rain or condensation is not present after one hour, the window will remain open; if moisture is present the window will close.

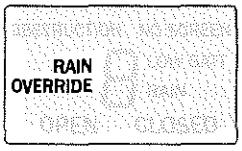

Issue	Things To Check
Electric operator does not operate – (open or close)	1) Make sure the insect screen is properly installed and red insect screen sensor is depressed. 2) Make sure the console control panel is set to the ON position. 3) Check to make sure operator arms are attached to sash. 4) Make sure the console control panel, electric operator and remote control are all adequately powered: - Console control panel switch is set to ON position. - All wires are plugged in. - Check wiring diagram and confirm wire connections. 5) Check window and operator for obstruction: - Weatherstripping. - Debris. - Sash misalignment. - Electric operator misalignment. 6) Confirm operator is correctly programmed to the console and/or remote. 7) Check for moisture on the rain sensors. Initiate rain sensor override if needed. 8) Make sure operator is installed on a window within the correct weight limit. 9) Make sure window is unlocked. 10) Check low battery indicator, replace battery if necessary. 11) Check 10 Amp fuse on red wire to battery connection, located in control panel box. 12) Check battery in remote control. 13) Check if GFI is tripped.
Electric operator has intermittent opening/ closing	See: Electric operator does not operate – (open or close) section. 1) Check for short/break in wiring. Make sure everything is properly grounded. 2) Make sure insect screen is properly installed and insect screen sensor is depressed.

Issue	Things To Check
Light on electric operator does not light up	1) Make sure the console, operator and remote control are all adequately powered: - Correct gauge wire is used. - All are plugged in and turned on. - Check wiring diagram. 2) Make sure lens cover is free of obstruction.
Console display does not light up	1) Make sure the console and operator are all adequately powered: - Console switch is set to ON position. - All are plugged in and turned on.
Electric operator sound quality changes excessively	The electric operator motor will be audible under normal operation. If the sound from the electric operator is excessive and abnormal from regular operation, check the following: 1) Inspect window and operator for signs of damage: - Interference between operator and sill. - interference between operator and cover. - Hinge misalignment. 2) Verify all components are secure and in proper working order. 3) Check motor operation: - Slow opening/closing - Partial opening/closing - Above could indicate a failing electric motor. 4) If odor or smoke is present, immediately stop operation and disconnect battery and AC power supply.
Where do I find the wiring schematic diagram?	Wiring schematic for the electric operator can be found on page 41.

Trouble Shooting Continued/

Issue/	Things To Check /
Rain sensor is not working when rain or moisture is present	1) Check cleanliness of both rain sensors - Use clean rag to remove debris from sensor(s). 2) Inspect both rain sensors for signs of damage. 3) Rain sensors will only work if override has not been initiated, see instruction guide for override procedure. 4) Rain sensors will only work when droplets of water physically come into contact with sensor.
Rain sensor override is not working	Check instruction guide for proper override procedure. 1) Override duration is one hour, further overrides will have to be initiated manually.
How do I reset the console when adding additional windows?	1. Push reset button on console and reprogram all windows as desired. Refer to programming process for further instruction.
Sill cover will not attach to electric operator	1) Make sure electric operator is secured correctly with supplied hardware to both frame and sash rod. - Inadequate torquing of screws will limit the space for sill cover to be snapped into place. Make sure all screws are properly secured but NOT over torqued. 2) Check for obstruction - Verify insect screen sensor is not depressed by sill cover. - Verify the tabs on the front of the electric operator housing are located properly. - Verify the electric operator is centered on the sill. - Verify that screws are seated in predrilled holes in frame. 3) Validate the sill cover length matches the window unit width.

Issue/	Things To Check /
Console does not respond to open or close at keypad or lights appear to be stuck on.	1) Insert a paper clip into the hole marked RESET to momentarily select the reset button to restart the console.
Electric operator is stuck in open position and loss of power occurs.	1) See Manual Closing Procedure section in this guide. 2) Call Andersen Service at 1-888-888-7020.

Regulatory Statements

UL, FCC and Industry Canada

Changes or modifications not expressly approved by Andersen Corporation may void the user's authority to operate the equipment.

This device complies with Part 15 of the FCC Rules and with Industry Canada licence-exempt RSS standard(s). Operation is subject to the following two conditions: (1) this device may not cause interference, and (2) this device must accept any interference, including interference that may cause undesired operation of the device.

Le présent appareil est conforme aux CNR d'Industrie Canada applicables aux appareils radio exempts de licence. L'exploitation est autorisée aux deux conditions suivantes : (1) l'appareil ne doit pas produire de brouillage, et (2) l'utilisateur de l'appareil doit accepter tout brouillage radioélectrique subi, même si le brouillage est susceptible d'en compromettre le fonctionnement.

Under Industry Canada regulations, these radio transmitters may only operate using an antenna of a type and maximum (or lesser) gain approved for the transmitter by Industry Canada. To reduce potential radio interference to other users, the antenna type and its gain should be so chosen that the equivalent isotropically radiated power (e.i.r.p.) is not more than that necessary for successful communication.

Conformément à la réglementation d'Industrie Canada, le présent émetteur radio peut fonctionner avec une antenne d'un type et d'un gain maximal (ou inférieur) approuvé pour l'émetteur par Industrie Canada. Dans le but de réduire les risques de brouillage radioélectrique à l'intention des autres utilisateurs, il faut choisir le type d'antenne et son gain de sorte que la puissance isotrope rayonnée équivalente (p.i.r.e.) ne dépasse pas l'intensité nécessaire à l'établissement d'une communication satisfaisante.

NOTE: The base unit has been tested and found to comply with the limits for a Class B digital device, pursuant to Part 15 of the FCC Rules. These limits are designed to provide reasonable protection against harmful interference in a residential installation. This equipment generates, uses and can radiate radio frequency energy and, if not installed and used in accordance with the instructions, may cause harmful interference to radio communications. However, there is no guarantee that interference will not occur in a particular installation. If this equipment does cause harmful interference to radio or television reception, which can be determined by turning the equipment off and on, the user is encouraged to try to correct the interference by one or more of the following measures:

- Reorient or relocate the receiving antenna.
- Increase the separation between the equipment and receiver.
- Connect the equipment into an outlet on a circuit different from that to which the receiver is connected.
- Consult the dealer or an experienced radio/TV technician for help.

DRIVER:/
M/N: 9018359
IC: 10511A-AB000104927
FCC ID: WVJ-AB00010492701
c UL us LISTED — FDDR Window Operator E360859

REMOTE:/
M/N: 9017587
IC: 10511A- AB000104928
FCC ID: WVJ-AB00010492801
c UL us LISTED — FDDR Window Operator E360859

CONSOLE:/
M/N: 9017591
IC: 10511A- AB000104929
FCC ID: WVJ-AB00010492901
c UL us LISTED — FDDR Window Operator E360859

PRODUCT TESTED TO AND COMPLIES WITH:

CLASS B DIGITAL DEVICE:
PART 15 PER FCC RULES

UL 325: STANDARD FOR DOOR, DRAPERY, GATE, LOUVER, WINDOW OPERATORS & SYSTEMS

c UL us LISTED — FDDR Window Operator E360859

Andersen WINDOWS • DOORS AW

Limited Warranty

ELECTRIC OPERATOR
with PowerAssist™ Technology

Manufactured on or after June 10, 2013

owner2owner® LIMITED WARRANTY

Electric Operator Enhanced by PowerAssist™ Technology

The components of the Andersen electric operator enhanced by PowerAssist™ technology ("electric operator") (power box, console, electric operator assembly, cover, slide bars) are warranted to be free from defects in manufacturing, materials and workmanship for one (1) year from the date of purchase from the retailer/dealer, but in no case, more than three years from the date of manufacture when used Andersen® A-Series awning and venting transom windows and 400 Series awning windows.

In the event an electric operator component fails as a result of a defect in manufacturing, materials or workmanship within the limited warranty period, Andersen, at its option will: (1) provide replacement parts to the Andersen retailer/dealer you specify – labor is not included; or (2) provide a factory-authorized repair to the existing component at no cost to you; or (3) refund the original purchase price or retailer's/dealer's price at the time of the original purchase, whichever is less. Such replacement parts (or repairs) are warranted for the remainder of the original limited warranty period.

General Conditions and Exclusions

The limited warranty set forth in this document is the only express warranty (whether written or oral) applicable to Andersen® electric operator, and no one is authorized to modify or expand this limited warranty. All warranty claims must be made during the applicable warranty period.

ALL IMPLIED WARRANTIES INCLUDING MERCHANTABILITY AND FITNESS FOR A PARTICULAR PURPOSE ARE LIMITED TO THE APPLICABLE STATUTE OF LIMITATION, BUT IN NO CASE WILL EXTEND BEYOND THE TERM OF THE LIMITED WARRANTIES SET FORTH ABOVE. ANDERSEN EXCLUDES AND WILL NOT PAY FOR INCIDENTAL OR CONSEQUENTIAL DAMAGES, WHETHER ARISING OUT OF CONTRACT, TORT OR OTHERWISE, AND ITS LIABILITY WILL IN ALL INSTANCES BE LIMITED TO THE REPAIR OR REPLACEMENT OR REFUND OF THE ACTUAL PURCHASE PRICE OF THE DEFECTIVE PRODUCT.

Some states do not allow the exclusion or limitation of incidental or consequential damages or limitation of the duration of an implied warranty, so the above limitations or exclusions may not apply to you.

This limited warranty is only applicable in the U.S.A. (i.e. the fifty states and the District of Columbia). This limited warranty gives you specific legal rights, and you may also have other rights which may vary from state to state.

What is NOT covered by this limited warranty

Product failure or damage caused by the following:

- Application to Andersen A-Series and 400 Series windows with Stormwatch® protection
- Application to products not specified for use with electric operators
- Application to products in areas within two miles of coastal regions
- Application to mulled windows
- Application to products in environments exceeding the temperature range of -20 degrees F to +150 degrees F
- AC power supply voltage exceeding 110V
- DC low voltage exceeding 11-13 volts
- Adjustments or corrections due to improper installation
- Application to non Andersen products
- Failure to properly install Andersen electric operators
- Improper maintenance, such as use of brick wash, sealants or improper washing
- Chemicals or airborne pollutants, such as salt or acid rain.
- Delivery by others
- Accidents
- Acts of God
- Normal wear and tear

Additional items excluded from this limited warranty:

- Labor to replace electric operator or components
- Labor and other costs related to the removal and disposal of defective product
- Tarnish or corrosion of electric operator finish
- Andersen A-Series, E-Series, 400 Series, 200 Series, 100 Series and complementary windows and doors, 400 Series windows with Stormwatch® protection and impact resistant glass, Renewal by Andersen® products, Silver Line® windows and doors and American Craftsman® windows and doors have their own limited warranties and are not covered by this limited warranty. For information on warranty coverage for these products, please refer to the specific limited warranties for these products. They are available at **andersenwindows.com.**

How to register your Owner-To-Owner® Limited Warranty

Andersen offers quick, easy warranty registration on our web site. Just go to andersenwindows.com/warranty and submit your warranty information online. All warranty information is treated as highly confidential and will never be sold or traded to any person or organization outside of Andersen Corporation.

EASY Online Registration

How to get help

For further information or to make a claim within this limited warranty period, please contact the Andersen retailer/dealer who supplied you with your Andersen® electric operator. If unavailable or unknown to you, you may contact us at:

Andersen Windows, Inc. / Andersen Service Center
100 Fourth Avenue North
Bayport, MN 55003-1096

You may also contact us using the Service section of our web site at www.andersenwindows.com or reach us by phone at 1-888-888-7020.

You can help us service you faster by collecting and including the following important information:

- Description of the product.
- Product ID label information.
- Description of product concerns.
- Documentation of the purchase date, if available.
- Your name, address (with zip code) where the product is installed and telephone numbers.

If the limited warranty period has expired or for repairs not covered by warranty, replacement operators are available for purchase. When warranty coverage is unclear, Andersen may charge an inspection fee for any on-site product inspection. If the inspector determines the Andersen electric operator has a defect covered by this limited warranty, the inspection fee will be waived.

For specific warranty information outside the United States, please contact your local distributor or write to:
Andersen Corporation / International Division
100 Fourth Avenue North
Bayport, MN 55003-1096 USA

"Andersen" and the AW logo are registered trademarks of Andersen Corporation. All other marks where denoted are marks of Andersen Corporation. ©2013 Andersen Corporation. All rights reserved.

9068151 BA Revised 05/16/13

Line Item #: 0001 Line Item Qty: 8 Initial:

Location:

RO Size = 4' 0 1/2" W x 2' 8" H Unit Size = 4' 0" W x 2' 7 1/2" H

400 Series, PSA Single Units
Unit Code/Item Size: AX41
Operation/Handing: V
Frame Option: Nailing Flange
Exterior Color: Dark Bronze
Interior Color: Clear Pine
Glass Type: High Performance Low-E4 Glass
Insect Screens: Stone
Extension Jamb: Clear Pine, 4 9/16", Factory Applied, Complete Unit Extension Jambs

---

Zone: North-Central
U-Factor: ---, SHGC: ---, ENERGY STAR® Certified: ---

Comments:

Qty	Part Num	Item Size	Description	Total Price	Extended Price
1	0000000	AX41	Unit, Dark Bronze/Clear Pine, V Handing, High Performance Low-E4 Glass, Electric Operator Prep - No Sash Locks (Includes 4 9/16" Factory Applied Clear Pine Complete Unit Extension Jambs)	$ 451.36	$ 3610.88
1	1586350	AX4	Insect Screen, Stone	$ 26.35	$ 210.80
				$ 477.71	**$ 3,821.68**

Line Item #: 0004 Line Item Qty: 1 Initial:

Location:

RO Size = N/A Unit Size = N/A

400 Series, PSA
Hardware: Remote Control - PowerAssist Parts

Comments:

Qty	Part Num	Item Size	Description	Total Price	Extended Price
1	9017587	--------	REMOTE, POWER WINDOW	$ 54.56	$ 54.56
				$ 54.56	**$ 54.56**

Customer:		**UNIT SPEC REPORT**		**Project:**	MERAMEC CAVERNS
Salesperson:	Administrator	**iQ Version:**	15.2		
Trade ID:		**Today's Date:**	10/14/2016	**Quote No:**	1323
Promotion Code:		**Date Quoted:**	03/08/2016	**Page:**	3 Of 5
Report:	Andersen Unit Spec Report				

Disclaimer/Notes

Item 0001
Unit Size AX41
Unit Operation **Location** **Arm:** Straight
V

Dimensions:	**Width**	**Height**
Unit:	4' 0"	2' 7 1/2"
Rough Opening:	4' 0 1/2"	2' 8"
Max. Clr. Open:	3' 7 3/16"	6 1/8"
Subfloor to Sill Stop:	4' 5 15/16"	
Projection:	n/a	

Operating Specifications:

Glass Area:	8.10	SQ FEET
Vent Area:	1.80	SQ FEET
Max. Clr. Open:	1.84	SQ FEET

Extension Jambs:
4 9/16" Clear Pine

Zone: North-Central
U-Factor: ---, SHGC: ---, ENERGY STAR® Certified: ---

C & R MECHANICAL COMPANY
Contractors & Engineers

May 19, 2016

Mr. Kenny J. Hemmen, RG, CGWP
Senior Project Manager
Geotechnology, Inc.
11816 Lackland Road
Suite 150
St. Louis, MO 63146

RE: Meramec Caverns Restaurant and Gift Shop HVAC Upgrade
Summary of Existing System and Recommendations

The following is an explanation of the existing HVAC system serving the Restaurant and Gift Shop followed by the proposed equipment upgrades to meet the specified application of maintaining a positive pressure within the restaurant/gift shop in relation to the adjacent Cavern entrance.

Existing HVAC System

- Four rooftop units providing heat and air conditioning
    - Existing cooling capacity is 18 tons
    - Total existing airflow for facility is 7,200 CFM
    - No use of outdoor air for ventilation
- Four kitchen hood exhaust fans
    - Total airflow for fans is 8,000 CFM
    - No makeup air is introduced into the kitchen
    - Exhaust fans are manually operated as needed

Requirements

- Introduce outdoor air to maintain a positive pressure in the restaurant/gift shop as compared to Cavern entrance
    - Increase heating and cooling capacity to condition the use of outdoor air for the facility
    - Provide a source of non-conditioned makeup air using outdoor air for the kitchen hood exhaust fans

12825 Pennridge Drive Bridgeton, MO 63044
314-739-1800 Fax 314-739-1721
www.crmechanical.com

Meramec Caverns Restaurant and Gift Shop HVAC Upgrade (continued)

Recommendations

- Kitchen Hood Make Up Air
    - Install a variable volume makeup air system using outdoor air
        - Make up air distribution duct to be installed in the existing kitchen hood as not to impact kitchen temperature environment
    - Replace existing kitchen hood exhaust fans
        - Existing exhaust fans are down discharge and will allow the recommended make up air fan to capture (short cycle) the air back into the hood system
- Positive Pressurization of Restaurant/Gift Shop area
    - Cooling load calculation using outdoor air to maintain positive pressure resulted in the requirement for an additional 14 tons of cooling to condition the outdoor air for distribution into the facility
    - Existing roof structural integrity and facility air distribution system does not allow for the use of one rooftop unit to meet the specified requirements.
- Replace existing units providing increased cooling and airflow capacities with the capability to introduce outdoor air as required to meet positive pressurization requirements
- Install one additional rooftop unit to meet the total requirements for increased cooling capacity and the use of outdoor air.
    - Unit size and weight allows for the installation without roof structural improvements
- Install a direct digital control system for equipment operation and positive pressure control as compared to Cavern entrance

Please do not hesitate to contact me should you have any questions regarding this summary of services.

Thank you for this opportunity to provide your mechanical system services.

Sincerely,

Richard R. Wolbert

C & R Mechanical Company
Service and Building Solutions Division
Office 314-739-1800 ext. 180
Mobile 314-280-3139
Email rwolbert@crmechanical.com

Submittal Sheet

Item #: 450371
Rev Date: 2015-12-14

FR Series

Inline Centrifugal Fans

STANDARD FEATURES

- Airflow up to 650 cfm
- Vibration welded seam ensures leak proof housing
- Approved for wet locations
- Air stream temperatures up to 140 °F
- Five-year factory warranty

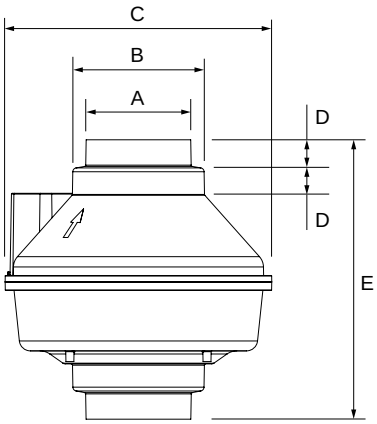

FR 100 / 110 / 200 / 225

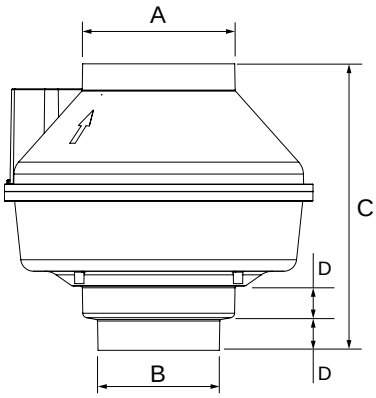

FR 125

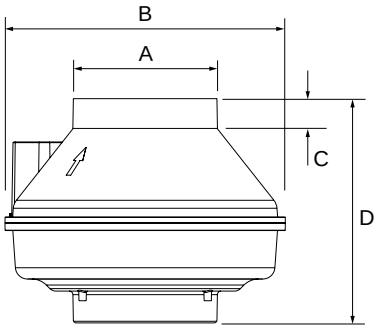

FR 140 / 150 / 160 / 250

Model	A	B	C	D	E	Weight	ENERGY STAR
FR 100 / 110	3 31/32	4 31/32	10	1	10 9/16	6 / 7	YES / NO
FR 125	5 31/32	3 31/32	9 3/8	1	-	6	YES
FR 200 / 225	8	10	13 1/4	1 1/2	12 1/4	10	NO

Model	A	B	C	D	Weight	ENERGY STAR
FR 140 / 150	5 7/8	11 1/2	1 1/4	9 1/4	8	NO / YES
FR 160	5 7/8	11 1/2	1 1/4	9 1/4	8	NO
FR 250	10	13 1/4	1 1/2	9 1/4	12	NO

All dimensions in inches. Weights in pounds.

Fan Specifications							Motor Specifications				
Line	Qty	Model No.	Tag	CFM	SP	Fan RPM	Watts	Volts	Phase	Hertz	Encl
1											
2											
3											
4											

Accessory Items	1	2	3	4	Accessory Items	1	2	3	4
☐		○	○	○	☐		○	○	○
☐		○	○	○	☐		○	○	○
☐		○	○	○	☐		○	○	○
☐		○	○	○	☐		○	○	○

Project: _____ Submitted: _____
Customer: _____ Approved: _____
Location: _____

United States 10048 Industrial Blvd. • Lenexa, KS 66215 • 1.800.747.1762 • www.fantech.net
Canada 50 Kanalflakt Way • Bouctouche, NB E4S 3M5 • 1.800.565.3548 • www.fantech.net

Fantech reserves the right to make technical changes.
For updated documentation please refer to **www.fantech.net**

fantech

Installation Manual / Manuel d'installation / Manual de Instalación

Item #: 401818
Rev Date: 2016-05-18

RSK Series

Backdraft Damper

Step 1
Select a mounting location. When using a single exhaust point, the damper should be installed directly to the exhaust vent (see illustration 1). When using multiple exhaust points, the damper can be located at the "Y", "T" or collector box (see illustration 2). If desired, additional dampers can be mounted at each exhaust view point. Based on the plane of the airflow, the damper should be mounted in a 180Þ radius above a horizontal axis. Mounting the damper in an inverted position may prevent the blades from closing completely. Preferred installation is vertical (illustration 1 is a vertical installation).

United States • 1.800.747.1762 • www.fantech.net
Canada • 1.800.565.3548 • www.fantech.ca

Fantech reserves the right to make technical changes.
For updated documentation please refer to **www.fantech.net**

RSK Series

Anti-refoulement

Étape 1
Choisissez l'emplacement. Lorsqu'on utilise un seul point d'évacuation, le registre doit être installé directement au tuyau de sortie (voir l'illustration 1). Dans le cas de points d'évacuation multiples, le registre peut être place à l'adapteur en "Y", en "T" ou à la boîte de jonction (voir l'illustration 2). Si on le désire, des registres peuvent être placés chaque point de ventilation de sortie. Selon le plan de la circulation d'air, le register devrait être placé dans un rayon de 180Þ au-dessus d'un axe horizontal. L'installation du registre en position inversée pourrait emp cher les lamellas de fermer complètement. Une installation à la verticale est préférable. (l'illustration 1 montre une installation verticale).

RSK Series

Regulador de contacorriente

Paso 1
Seleccíonne un sitio de montaje. Si se trata de un solo punto de salida, el regulador se debe instalar directamente en el respiradero de salida (ver ilustración 1). Tratándose de mútiples puntos de salida, el regulador se puede situar en la "Y", en la "T" o en la caja colectora (ver ilustración 2). Si desea, se pueden montar reguladores adicionales en cada salida. Con respecto al plano de la corriente de aire. el regulador se debe montar en un radio de 180Þ por encima de un eje horizontal. Si se monta el regulador en posición invertida puede que las persianas no logren cerrar por completo. La instalación preferida es la vertical (ver instalación vertical en la ilustración 1).

fantech®
a systemair company

Step 2

Important: Dampers must always be installed so that the airflow direction will open the butterfly blades. If the damper is installed between the exhaust vent point and the fan, the blades will open toward the fan. If the damper is installed between the fan and the discharge point, the blades will open away from the fan. Insert the damper into the ducting at the selected locations. The damper will easily fit inside wire helix type flexible ducting. Secure using CB or FC clamps and/or duct tape. When installing the damper into rigid type ducting. FC clamps or duct tape should be used.

Étape 2

Important: Les registres doivent toujours être installés de façon ce que la direction du débit d'air fera ouvrir les lamellas en papillon. Si le registre est installé entre le point du tuyau de sortie et le ventilateur, les lamelles souvririont en direction et le point de décharge, les lamelles s'ouvririont du côté inverse du ventilateur. Insérez le registre dans le conduit l'endroit sélectionné. Il sera facile d'introduire le registre dans un conduit flexible. Le maintenir en place au moyen d'attaches de type CB ou FC ou encore de ruban pour conduits. Lorsqu'on installe le registre dans du conduit de type rigide, Il convient d'utiliser des attaches FC ou du ruban pour conduits.

Paso 2

Importante: Los reguladores siempre se deben instalar de manera que la corriente de aire abran las persianas. Si el regulador se instala entre el ventilador y el respiradero de salida, las persianas se abren hacia et ventilador. Si se instala entre el ventilador y el punto de descarga, las persianas se abren en dirección opuesta. Inserte el regulador en el conducto en el sitio seleccionado. El regulador cabe fácilemente dentro de conductos flexibles de tipo helicoidal. Asegúrelo usando abrazaderas CB o FC y/o cinta para conductos. Para instalar el regulador en un conducto rigido se debe emplear abrazaderas de tipo FC o cinta para conductos.

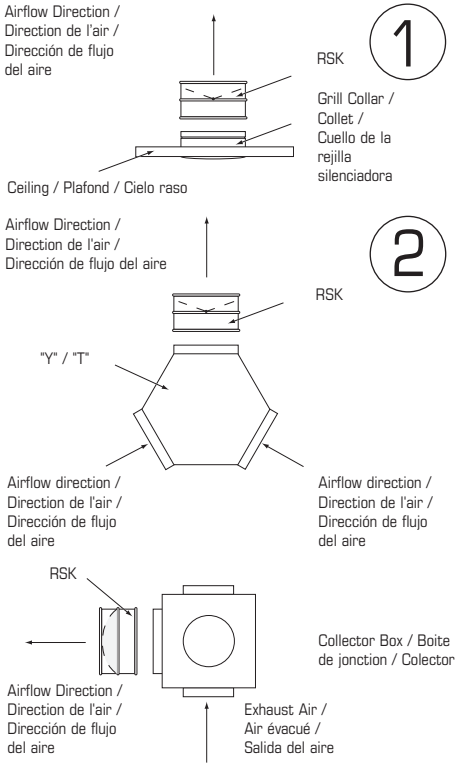

Fantech

NOVEMBER 2009

FR SERIES
INLINE EXHAUST FANS

Fantech's versatile FR Series Inline Fans provide the ideal answer for a variety of air movement problems in residential and commercial applications. The fans feature a plastic housing constructed of UL-recognized, UV protected thermo-plastic resin. This tough protective shell allows the fan to be mounted in outdoor and wet locations*. FR fans feature external rotor motors that have proven dependable year after year. Fan is fully caulked to prevent moisture from entering the housing.

Applications

FR fans can be used for multiple point exhaust applications, crawl space venting or make-up air supply. They are also widely used as booster fans to move air from one room or area to another.

ENERGY STAR

Look for the Energy Star Rated Models in Performance Data Chart on back page

c UL us

c SP us

2100 HVI CERTIFIED

FIVE YEAR WARRANTY

DUAL BATH APPLICATIONS - COMMERCIAL OR RESIDENTIAL

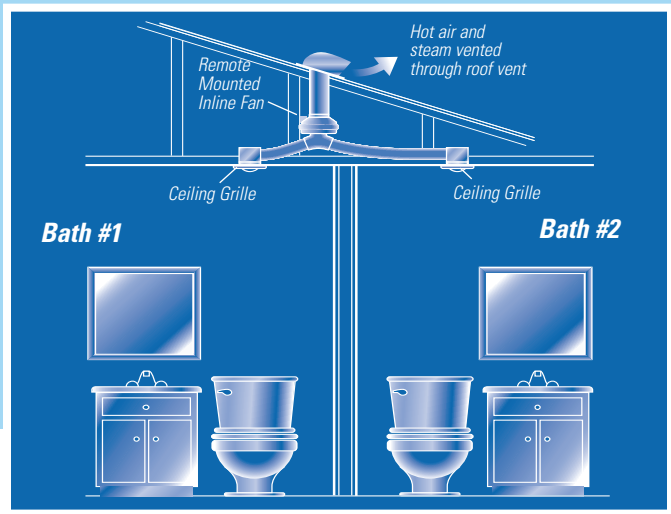

NEW ADDITION

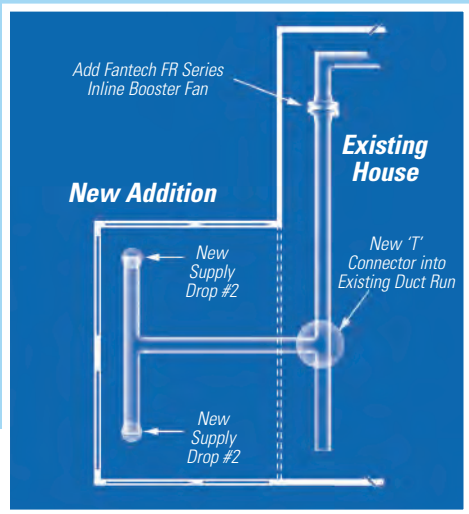

EASY TO INSTALL. LOADED WITH FEATURES:

- Prewired and supplied with a mounting bracket for easy installation
- UL Listed; CSA Certified
- Approved for residential and commercial applications and for wet locations
- Suitable for airstream temperatures up to 140° F
- Easy connection using external wiring box with waterproof gasket
- 137-649 CFM
- 4" to 10" duct diameters
- 100% speed controllable
- Five-year factory warranty

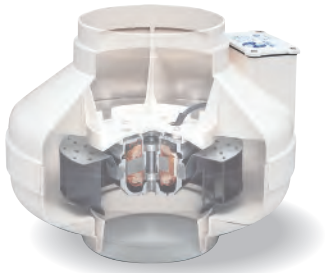

Fantech external rotor motor

** The FR Series is not manufactured to operate with water running through the motor compartment, or to be used in applications where the fan would be buried underground. A UL-recognized waterproof conduit should be used for all outdoor applications to prevent moisture entry via knockout in wiring box.*

FR SERIES

INLINE EXHAUST FANS

DIMENSIONAL DATA

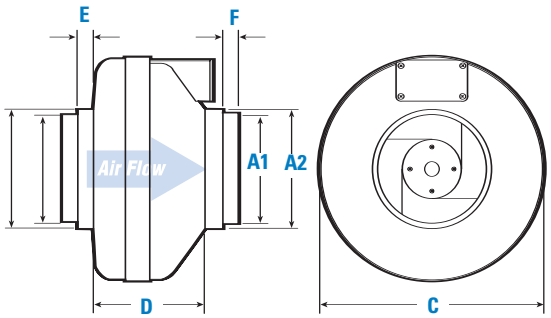

Model	†A1	A2	C	D	E	F
FR 100	4	5	9½	6⅛	⅞	⅞
FR 110	4	5	9½	6⅛	⅞	⅞
FR 125	–	5	9½	6⅛	⅞	–
FR 140	6	6¼	11¾	5⅞	1	⅞
FR 150	6	6¼	11¾	5⅞	1	⅞
FR 160	6	6¼	11¾	5⅞	1	⅞
FR 200	8	10	13¼	6¼	1½	1½
FR 225	8	10	13¼	6¼	1½	1½
FR 250	–	10	13¼	6¼	1½	–

All dimensions in inches.
† Duct connections are 1/8" smaller than duct size.

FIVE YEAR WARRANTY

HVI CERTIFIED

ENERGY STAR

Look for the Energy Star Rated Models in Performance Data Chart.

AIR PERFORMANCE GRAPHS

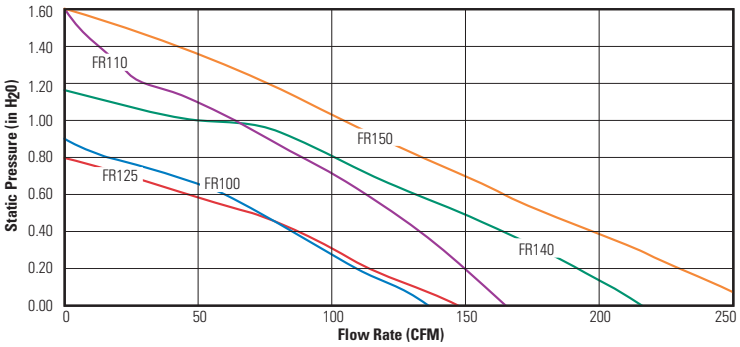

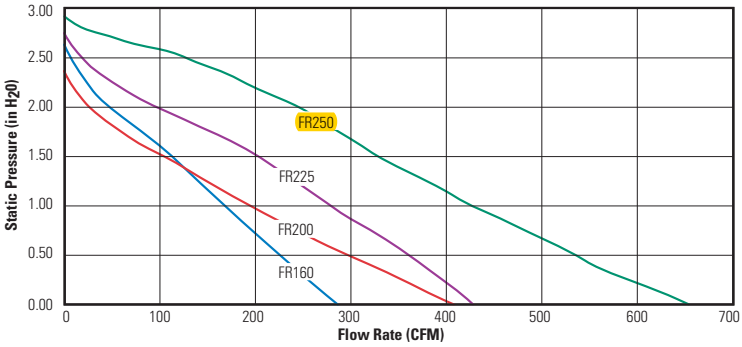

PERFORMANCE DATA

Fan Model	Energy Star	RPM	Voltage	Rated Watts	Wattage Range	Max. Amps	Static Pressure in Inches W.G. 0"	.2"	.4"	.6"	.8"	1.0"	1.5"	Max. Ps	Duct Dia.
FR 100	✔	2950	120	21.2	13 – 22	0.18	137	110	83	60	21	—	—	0.9"	4"
FR 110	—	2900	115	80	62 – 80	0.72	167	150	133	113	88	63	4	1.60"	4"
FR 125	✔	2950	115	18	15 – 18	0.18	148	120	88	47	—	—	—	0.79"	5"
FR 140	✔	2850	115	61	47 – 62	0.53	214	190	162	132	99	46	—	1.15"	6"
FR 150	✔	2750	120	71	54 – 72	0.67	263	230	198	167	136	106	17	1.58"	6"
FR 160	—	2750	115	129	103 – 130	1.14	289	260	233	206	179	154	89	2.32"	6"
FR 200	✔	2750	115	122	106 – 128	1.11	408	360	308	259	213	173	72	2.14"	8"
FR 225	✔	3100	115	137	111 – 152	1.35	429	400	366	332	297	260	168	2.48"	8"
FR 250	—	2850	115	241	146 – 248	2.40	649	600	553	506	454	403	294	2.58"	10"

Performance shown is for installation type D - Ducted inlet, Ducted outlet. Speed (RPM) shown is nominal. Performance is based on actual speed of test.
Performance ratings do not include the effects of appurtenances in the airstream.

Fantech
United States 10048 Industrial Blvd. • Lenexa, KS 66215 • 1.800.747.1762 • www.fantech.net
Canada 50 Kanalflakt Way • Bouctouche, NB E4S 3M5 • 1.800.565.3548 • www.fantech.net

Item #: 450399
Rev Date: 111009

Fantech, reserves the right to modify, at any time and without notice, any or all of its products' features, designs, components and specifications to maintain their technological leadership position.

Installation and Operation Manual
Manuel d'installation et d'opération
Manual de Instalación y Mantenimiento

Item #: 401444
Rev Date: 2016-07-07

FR Series

Inline Centrifugal Fans
Ventilateurs Centrifuge en ligne
Ventiladores para Conductos Circulares

To ensure quiet operation of ENERGY STAR® qualified inline and remote fans, each fans shall be installed using sounds attenuation techniques appropriate for the installation. For bathroom and general ventilation applications, at least 8 feet of insulated duct shall be installed between the exhaust or supply grilles(s) and the fan. For kitchen range hood remote ventilation applications, where metal duct is generally required by code, a metal sound attenuator shall be installed between the range hood and the fan.

Pour assurer un fonctionnement silencieux des ventilateurs et des ventilateurs à distance qualifiés ENERGY STAR®, chaque ventilateurs doit être installé en utilisant des techniques d'atténuation du son appropriées pour l'installation. Pour les applications de salles de bain et les applications de ventilation générales, au moins 8 pieds de conduits flexible isolé doivent être installées entre les grilles d'évacuation et d'approvisionnement du ventilateur. Pour les applications de hotte de cuisinière à distance, où un conduit en métal est généralement requis par le code du bâtiment, un atténuateur acoustique en métal doit être installé entre la hotte et le ventilateur.

Para asegurar una operación silenciosa de los ventiladores en línea certificados ENERGY STAR, cada ventilador debe instalarse utilizando técnicas de atenuación de sonido apropiadas para cada caso. Para baños y aplicaciones comunes de ventilación se recomienda instalar por lo menos 8' de ducto flexible con aislamiento entre la rejilla de expulsión y/o inyección y el ventilador. Para campanas de cocina con un ventilador de extracción remoto, done se usa por código ducto rígido, se recomienda instalar un atenuador de sonido entre la campana y el ventilador.

Techical / Customer Support:

United States Tel.: 800.747.1762 **Canada** Tel.: 800.565.3548

fantech®
a systemair company

WARNINGS

DO NOT CONNECT POWER SUPPLY until fan is completely installed. Make sure electrical service to the fan is in the locked "OFF" position.

1. All fans are suitable for use with solid-state speed control.

2. This unit has rotating parts and safety precaution should be exercised during installation, operation and maintenance.

3. CAUTION: For General Ventilation Use Only. Do Not Use To Exhaust Hazardous Or Explosive Materials And Vapors

4. WARNING! TO REDUCE THE RISK OF FIRE, ELECTRIC SHOCK, OR INJURY TO PERSONS - OBSERVE THE FOLLOWING:

a. Use this unit in the manner intended by the manufacturer. If you have any questions, contact your manufacturer's representative or contact us directly.
b. CAUTION: Before installation, servicing or cleaning unit, switch power off at service panel and lock the service disconnection means to prevent power from being switched on accidentally.
c. Installation work and electrical wiring must be done by qualified person(s) in accordance with all applicable codes and standards, including fire-rated construction.
d. Sufficient air is needed for proper combustion and exhausting of gases through the flue (chimney) of fuel burning equipment to prevent back drafting. Follow the heating equipment manufacturer's guideline and safety standards such as those published by the National Fire Association (NFPA), and the American Society for Heating, Refrigeration and Air-Conditioning Engineers (ASHRAE), and the local code authorities.
e. When cutting or drilling into wall and ceiling, do not damage electrical wiring and other hidden utilities.
f. Ducted fans must always be vented to the outdoors.
g. If this unit is to be installed over a tub or shower, it must be marked as appropriate for the application and be connected to a GFCI (Ground Fault Circuit Interrupter) - protected branch circuit.
h. NEVER place a switch where it can be reached from a tub or shower.

5. WARNING! Check voltage at the fan to see if it corresponds to the motor name plate.

GUARDS MUST BE INSTALLED WHEN FANS IS WITHIN REACH OF PERSONNEL OR WITHIN SEVEN (7) FEET OF WORKING LEVEL OR WHEN DEEMED ADVISABLE FOR SAFETY.

ADVERTISSEMENTS

NE PAS BRANCHER l'électricité jusqu'à ce que le ventilateur soit complètement installé. Veillez à ce que le tableau électrique du ventilateur soit verrouillé ("OFF").

1. Tous les ventilateurs sont faits pour être utilisés avec une commande de vitesse.
2. Cette unité à des pièces d'échange et que les mesures de sécurité soient respectées pendant l'installation, le fonctionnement et l'entretien.
3. ATTENTION: Pour une ventilation générale seulement. À ne pas utiliser pour évacuer des échappements dangereux ou des matériaux et des gaz explosifs.
4. AVERTISSEMENTS POUR RÉDUIRE LES RISQUES D'INCENDIE, DE DECHARGE ELECTRIQUE OU RISQUE DE BLESSURES. SUIVEZ LES CONSEILS SUIVANTS:

a. Cet appareil ne doit pas être utilisé pour une autre fonction que celle prévue par son fabricant. Si vous avez des questions, contactez les représentants de vos fabricants ou contactez-nous directement.
b. ATTENTION: Avant l'installation, le service ou le nettoyage de l'appareil, fermer l'électri-cité et fermer à clé le compteur électrique afin d'éviter que l'électricité ne soit retranchée accidentellement. Si le compteur ne peut pas être fermé à clé, attachez au compteur un dispositif de sécurité comme par exemple une étiquette.
c. L'installation de l'électricité doit être faite par une personne qualifiée en accord avec les codes applicables et les règles pour la construction anti-feu.
d. La circulation de l'air est nécessaire pour une bonne combustion et pour l'aspiration des gazs dans la cheminée afin d'éviter des refoulements. Suivez le guide de chauffage du fabriquant ainsi que les règles de sécurités comme celles qui sont éditées par l'Association Nationale des Sapeurs Pompiers (NFPA) et l 'Association américaine des Ingénieurs pour le chauffage et l'air conditionné (ASHRAE) ainsi que celles des autorités locales.
e. Lorsque vous coupez ou percez le mur et le plafond faites attention de ne pas endommager les câbles électriques des autres appareils utilitaires.
f. Le ventilateur caréné doit toujours être branché sur l'extérieur.
g. Si l'appareil doit être installé au-dessus d'une baignoire ou d'une douche, il doit être signalé comme tel pour son utilisation et l'installation d'une prise de terre est nécessaire.
h. NE JAMAIS placer près de la baignoire ou de la douche un interrupteur à porté de la main.

5. ATTENTION : Vérifier le voltage afin de voir s'il correspond à celui indiqué sur la plaque du moteur.

DES BARRIÈRES DOIVENT ÊTRE INSTALLÉES QUAND LE VENTILATEUR EST DANS LE PÉRIMÈTRE D'ATTEINTE PAR LE PERSONNEL OU À MOINS DE 2 MÈTRES DU NIVEAU DE TRAVAIL OU SELON LES RECOMMANDATIONS DE SÉCURITÉ.

ADVERTENCIAS

NO CONECTE LA ALIMENTACION hasta tanto el ventilador quede completamente instalado. Cerciórese de que el servicio eléctrico al ventilador quede asegurado en la posición "OFF" (desactivado).

1. Todos los ventiladores vienen preparados para controlarse mediante controles de estado sólido.
2. Esta unidad tiene piezas rotativas, y se deben tomar precauciones de seguridad durante la instalación, operación y mantenimiento.
3. PRECAUCION: Sólo para Ventilación General. No Usar ParaDesalojar Materiales y Vapores Peligrosos o Explosivos.
2. ADVERTENCIA: PARA REDUCIR EL RIESGO DE INCENDIO, CONMOCION ELECTRICA O LESIONES A PERSONAS, OBSERVE LO SIGUIENTE:

a. Sólo utilice esta unidad de la manera dispuesta por el fabricante. Si tiene cualquier pregunta, diríjase al representante del fabricante, o bien a nosotros directamente.
b. PRECAUCION: Antes de la instalación, mantenimiento o limpieza de la unidad, desconecte la alimentación en el tablero de servicio y cierre con llave el interruptor del circuito para impedir la reactivación accidental. De no poder cerrarse el interruptor con llave, aplíquele al tablero una etiqueta o dispositivo de advertencia bien visible.
c. Los trabajos de instalación y cableado eléctrico tienen que ser realizados por personal calificado conforme todos los códigos y normas del caso, incluso el código de incendio en la construcción.
d. La debida combustión y extracción de gases a través de la chimenea de equipos quemadores de combustibles, requiere de una cantidad adecuada de aire que impida el contratiro. Siga las pautas y normas de seguridad del fabricante, tales como publica la National Fire Association (NFPA) (Asociación Nacional de Incendios) y la American Society for Heating Refrigeration and Air-conditioning Engineers (ASHRAE), así como las de las autoridades locales del código.
e. Al cortar o perforar paredes y cielos rasos, tenga cuidado de no dañar el cableado eléctrico u otros servicios públicos ocultos.
f. Los ventiladores montados en conductos siempre deben contar con respiraderos al exterior.
g. Si esta unidad ha de instalarse por encima de una bañera o ducha, tiene que venir marcada como tal par dicha aplicación y conectarse a un circuito protector interruptor de circuitos de tierra falla.
h. JAMAS coloque un interruptor al alcance de una bañera o ducha.

3. ¡ADVERTENCIA! Revise el voltaje entrante al ventilador para constatar que corresponda al que indica la placa de fábrica.

HAY QUE INSTALAR GUARDAS DONDE QUIERA QUE EL VENTILADOR QUEDE AL ALCANCE DEL PERSONAL, A MENOS DE SIETE (7) PIES DEL NIVEL DE OPERACION, O DONCE SE ESTIME ACONSEJABLE PARA LA SEGURIDAD.

INSTALLING MOUNTING BRACKET & FAN

1. When selecting fan mounting location, the following criteria should be considered: a) mounting to minimize noise generated by fan operation; b) service accessibility

   a) Mounting the fan as far as possible from the intake point will minimize fan operating noise from being transmitted back through the duct work. If the fan is to be used as a booster for moving the air between two rooms, a central point along the duct may be optimal. Insulated flexible type duct work (recommended for all bathroom exhaust applications) will result in much quieter operation. Fantech recommends minimum 8' of insulated flexible duct between any exhaust grill and fan for low noise level.

   b) Fan location should allow sufficient access for service.

Mount Bracket (NB).

Mount Fan.

2. Using the wood screws provided, attach the mounting bracket (NB or MB) to a support beam at the selected location. Fan mounting can be at any point along the duct and in any angle, however, vertical mounting is recommended to reduce condensation buildup in the fan. If a horizontal installation is necessary and condensation buildup may pose a problem, either wrap insulation around the fan or drill a 1/4" hole in the bottom of the housing (along with an NPT insert (by others) and drain tubing) allowing condensation to drain.

Mount Bracket (MB).

3. Attach fan to the mounting bracket with the sheet metal screws provided. Wiring box should be positioned for easy access. Bracket is provided with rubber vibration isolation grommets to prevent the transmission of sound through the structure. Be careful not to overtighten. Also, care should be taken not to strip the plastic housing. Screws are self tapping and do not require pilot holes. However, pilot holes (no larger than 3/32") are recommended.

Mount Fan.

4. Connect duct work to inlet and outlet of fan using CB clamps or duct tape. When using insulated duct, it is recommended that the inner vinyl core be clamped or taped to the inlet and outlet and that the vapor barrier surrounding the insulation be duct taped to the fan housing.

NOTE: Steps 2 & 3 may be reversed.

The ducting from this fan to the outside of the building has a strong effect on the air flow, noise and energy use of the fan. Use the shortest, straightest duct routing possible for best performance, and avoid installing the fan with smaller ducts than recommended. Insulation around the ducts can reduce energy loss and inhibit mold growth. Fans installed with existing ducts may not achieve their rated air flow.

Duct sealant, caulk, or tape should be applied to all seams, including around the opening in the wall or ceiling on the interior and around exterior building penetrations, to prevent air leakage and maximize air performance.

INSTALLING DG SUPPLY/EXHAUST GRILL

If a Vent/Light combination kit is purchased, the VLC vent/lights are supplied with a separate installation instruction replacing steps 1 through 4.

Mount Collar

Side view grill and collar.

1. Select the grill mounting point within the area to be ventilated. To ease installation, locations of framing beams within the walls or joists supporting the ceiling should be considered. Collar/damper is provided with a perforated hanging strap for attachment directly to a beam or joist. Allow sufficient space between the collar/damper and the beam to attach the duct work. If the location of the grill does not allow direct attachment, a cross-member mounted to the framing should be used.
2. Place the mounting collar/damper in the selected location and trace a circle onto the surface. From the interior side of the room, cut through the surface. Please note: In order to assure a smoother finish when mounting through a sheetrock or tile type ceiling, it is recommended that a razor knife be used to make the cut.
3. From within the attic or crawl space, place the mounting collar into the hole until the edge of the collar is flush with the interior wall or ceiling surface. Attach collar to the support beam with the 2" wood screws provided. Attach duct work. Secure using CB or FC clamps and/or duct tape. When installing the damper into rigid type ducting, FC clamps or duct tape should be used.

   PLEASE NOTE: When attaching flex duct to the collar/damper combination and an immediate elbow is necessary, be certain that the elbow is installed with a "soft" bend to allow damper blades to operate properly.
4. Snap the grill into the mounting collar/damper. Grill should be pushed tightly into place for an airtight fit. If there is a gap between the collar and the ceiling it should be caulked to avoid air leakage. For subsequent cleaning the grill can be pulled out and cleaned.

Flexible Duct Installation Hints

Flexible insulated duct is strongly recommended where allowed by local code for bathroom exhaust applications, where ducting passes through unconditioned space or where noise is a factor. Failure to use insulation could result in excessive condensation buildup within the duct, and undesirable sound levels within the room. For the quietest possible installations, Fantech recommends a minimum of 8' of insulated flexduct between any exhaust grill and fan. When using flexible type duct work, duct should be stretched as tight and straight as possible. Failure to do so could result in dramatic loss of system performance. Flexible duct should be connected to the fan with CB type clamps or duct tape. All connections should be as airtight as possible to maximize system performance.

ELECTRICAL CONNECTION

Liquid tight wiring – Top View (For outside applications).

Romex wiring – Top View

1. Remove the screws securing the terminal box cover plate located on the side of the fan. All fan motor connections are pre-wired to an electrical terminal strip. A 3/8" romex type cable restraint connector will be needed to secure the wiring through the knockout provided on the side of the terminal box.
2. Bring incoming electrical service through the romex connector and the fan knockout. Be sure to place the connector nut over the wiring coming into the terminal box. There are two open ports on the terminal strip. Using a small regular screwdriver, tighten the neutral (white) wire of the incoming supply under the open terminal strip port labeled "N". Tighten the line (black) wire of the incoming supply under the open terminal strip port labeled "L". Since the fan motor is isolated within a plastic housing, grounding is not necessary.
3. Secure the romex connector. Secure the incoming supply with the romex connector. Replace the fan terminal box cover. All fan motor and capacitor connections have been pre-wired from the factory. No additional fan wiring is necessary.

WIRING DIAGRAMS

All Models
Without Motor Speed Controller

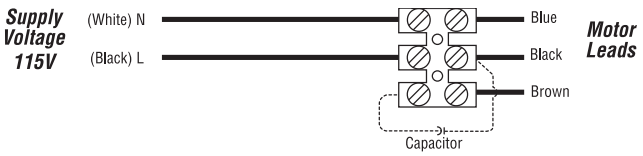

With Motor Speed Controller

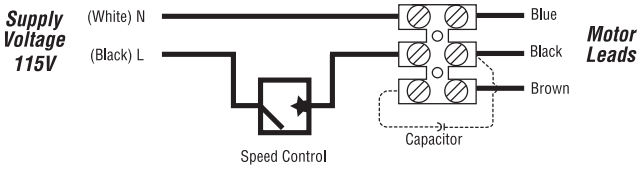

Multiple Location Switching Wiring Diagram

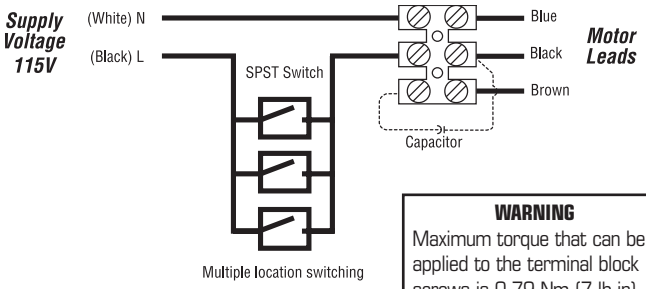

WARNING
Maximum torque that can be applied to the terminal block screws is 0.79 Nm (7 lb-in).

TROUBLESHOOTING

If fan fails to operate, please check the following:

1. Consult wiring diagrams (see below) to insure proper connection.
2. Check motor lead wiring, capacitor leads and incoming supply leads to insure definite contact.
3. If possible, use a meter to test for continuity across the fan motor leads. In order to do this, the capacitor must be disconnected (do not test the capacitor - it will not meter continuity). If motor leads show continuity, consult factory for a replacement capacitor.

MAINTENANCE INSTRUCTIONS

Since fan bearings are sealed and provided with an internal lubricating material, no addition lubrication is necessary.

INSTALLER LES ATTACHES DU SUPPORT ET DU VENTILATEUR

1. Pour choisir l'emplacement des fixations du ventilateur, les critères suivants devraient être considérés: a) fixer pour réduire au minimum le bruit produit par le fonctionnement du ventilateur; b) type d'application; et c) l'accessibilité pour le service.

Fixer le support de montage (NB)

a) Monter le ventilateur aussi loin que possible des sources d'aération réduira au minimum le bruit de fonctionnement du ventilateur transmis par le tuyau. Si le ventilateur doit être utilisé comme régulateur pour déplacer l'air entre deux salles, un point central le long du tuyau peut être optimal. Un travail d'isolation pour les tuyaux d'aération (recommandé pour tout le système d'aération des salles de bain) permettra un fonctionnement plus silencieux. Fantech recommande le tuyau d'aération isolé de 8 pieds minimum entre n'importe quelle grille d'aération et du ventilateur pour minimiser le bruit.

Attacher le ventilateur.

b) L'emplacement du ventilateur devrait permettre un accès suffisant pour le service.

2. Utilisez les vis en bois fournies, attachez le support (NB ou MB) à une poutre du support à l'emplacement choisi. Le support du ventilateur peut être située à un point quelconque le long du tuyau et dans n'importe quel angle, cependant, le support vertical est recommandé pour réduire la formation de condensation dans le ventilateur. Si une installation horizontale est nécessaire, la formation de condensation peut poser un problème, enrouler alors l'isolation autour du ventilateur ou faites un trou 1/4" dans le bas de la boite (avec une insertion de NPT (supporter par autre) et une tuyauterie de vidange) permet à la condensation de s'écouler.

Fixer le support de montage (MB).

3. Attacher le ventilateur au support avec les vis en métal fournies. La boite de câblage devrait être placée de façon a avoir un accès facile. L'attache est équipée d'oeillets d'isolement de vibration en caoutchouc pour empêcher la transmission du bruit par la structure. Faites attention à ne pas trop serrer. En outre, prenez soin de ne pas enlever le revêtement en plastique. Les vis sont auto-collantes et n'exigent pas les trous pilotes. Cependant, les trous pilotes (pas plus grands que 3/32") sont recommandés.

Attacher le ventilateur.

4. Connectez le tuyau à la prise et à la sortie du ventilateur à l'aide des pinces CB ou de ruban adhésif. En utilisant le tuyau isolé, il est recommandé que l'intérieur en vinyle soit maintenu ou coller avec du ruban adhésif sur la prise d'entrée et de sortie et que la barrière de vapeur entourant l'isolation soit collée au logement du ventilateur par du ruban adhésif.

NOTE: Les étapes 2 & 3 peuvent être renversées.

Le conduit de raccordement de ce ventilateur avec l'extérieur de l'immeuble a un effet important sur le débit d'air, le bruit et la consommation d'énergie du ventilateur. Veuillez utiliser le conduit le plus court et le plus droit possible pour obtenir un rendement optimal, et évitez d'installer des conduits plus petits que recommandé pour le ventilateur. L'isolation autour des conduits peut réduire les pertes d'énergie et empêcher la moisissure. Les ventilateurs installés avec des conduits existants pourraient ne pas offrir le débit d'air nominal.

Scellant adhésif, calfeutrage ou un ruban devraient être appliqués à tous les joints, y compris autour de l'ouverture dans le mur ou au plafond à l'intérieur et autour des pénétrations de construction extérieurs, pour éviter les fuites d'air et optimiser la performance de l'air.

INSTALLER LA GRILLE D'ALIMENTATION ET D'AÉRATION DG

Si un kit de combinaison de Vent/Lumière est acheté, les VLC vent/lumière sont fournis avec une instruction d'installation séparée substituant les étapes 1 à 4.

1. Choisissez le point du support de la grille dans la zone qui doit être ventilée. Pour faciliter l'installation, les emplacements des poutres d'encadrement dans les murs ou les solives de plafond devraient être considérés. Le collier/régulateur est équipé de courroie perforée pour la connexion directe à une solive de plafond ou à une poutrelle. Permettez suffisamment d'espace entre le collier/régulateur et la poutre pour attacher la tuyauterie. Si l'emplacement de la grille ne permet pas une connexion directe, une entretoise montée sur l'encadrement devrait être utilisée.

Collet de montage.

Vue latérale grille et collet

2. Placez la fixation du collier/ régulateur dans l'emplacement choisi et tracez un cercle sur la surface. A l'intérieur de la salle, coupez à travers la surface. Veuillez noter : Afin d'assurer une finition plus lisse pour un montage sur un toit de pierres ou un toit de tuiles il est recommandé qu'un couteau rasoir soit utilisé pour couper.
3. A partir d'un grenier ou d'un vide sanitaire, placez le support du collier dans le trou jusqu'à ce que le bord du collier soit aligné avec le mur ou la surface intérieure du plafond. Attachez le collier à la poutre avec les vis en bois de 2 pouces fournies. Attachez le tuyau. Fixez à l'aide des pinces CB ou FC et/ou avec du ruban adhésif. Pour installer le régulateur sur la tuyauterie rigide, des pinces FC ou du ruban adhésif devront être utilisés.

   VEUILLEZ NOTER: Lorsque vous attachez le tuyau au collier/régulateur et qu'un coude est nécessaire, veillez à ce que le coude soit installé avec une courbe "douce" pour permettre aux lames du régulateur de fonctionner correctement.
4. Enclencher la grille sur le support du collier/régulateur. La grille devrait être pousser fermement en place pour un ajustement hermétique. S'il y a un espace entre le collier et le plafond il devra être colmaté pour éviter la fuite d'air. La grille peut être retirée et nettoyée pour le nettoyage ultérieur.

Conseils pour l'installation du tuyau

Le tuyau flexible isolé est vivement recommandé où permis par le code local pour l'installation du système d'aération dans les salles de bains où la tuyauterie passent à travers des endroits isolés et où le bruit est un facteur. Ne pas utiliser d'isolation peut entraîner la formation de condensation excessive sur le tuyau et des bruits indésirables dans la pièce. Pour des installations insonorisées au maximum, Fantech recommande un tuyau flexible isolé de 8 pieds au minimum entre toutes les grilles aération et du ventilateur. En utilisant un tuyau flexible, le tuyau devrait être étiré aussi fortement et droit que possible. Ne pas le faire peut entraîner la perte d'efficacité du fonctionnement du système. Le tuyau flexible devrait être relié au ventilateur avec des pinces de type CB ou par ruban adhésif. Toutes les connexions devraient être aussi hermétiques que possible afin de maximiser le fonctionnement du système.

CONNEXTION ÉLECTRIQUE

1. Retirer les vis fixant le couvercle de la boite de connexion située à côté du ventilateur. Toutes les connexions de moteur du ventilateur sont précablées à une bande de connexion électrique. Un connecteur encastré câble de type romex 3/8" pouces sera nécessaire pour fixer le câblage par l'éjection fournie sur le côté de la boite de connexion.

Câblage sserré de liquide - vue de dessus (pour des installations extérieur)

2. Amener le courant électrique par le connecteur romex et le ventilateur d'éjection. Soyez sûr de placer l'écrou du connecteur au-dessus du câblage venant de la boite de connexion. Il y a deux ports ouverts sur la bande de connexion. En utilisant un petit tournevis régulier, serrez le fil (blanc) neutre de l'entrée de l'alimentation sous le port de la bande de connexion étiqueté "N". Serrez le fil (noir) de la ligne d'entrée de l'alimentation sous le port de la bande de connexion étiqueté "L". Le moteur du ventilateur étant isolé dans une boite en plastique, la prise de terre n'est pas nécessaire.

Câblage Romex - Vue de dessus

3. Fixez le connecteur romex. Fixez l'entrée de l'alimentation avec le connecteur romex. Substituez la couverture de la boite de connexion du ventilateur. Toutes les connexions du moteur et du condensateur du ventilateur ont été précablées à l'usine. Aucun câblage supplémentaire pour le ventilateur est nécessaire.

DIAGRAMMES DE RACCORDEMENT

Tous les modèles
Sans contrôle de vitesse du moteur

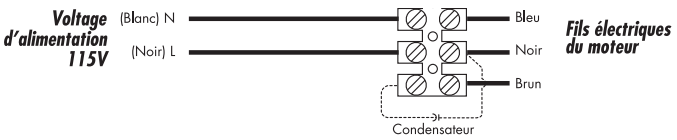

Avec contrôle de vitesse du moteur

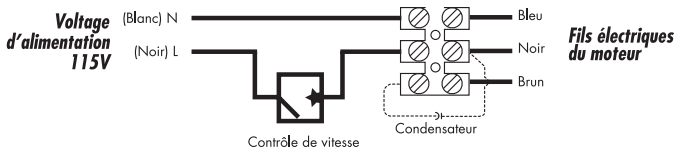

Diagramme de branchement pour plusieurs pièces

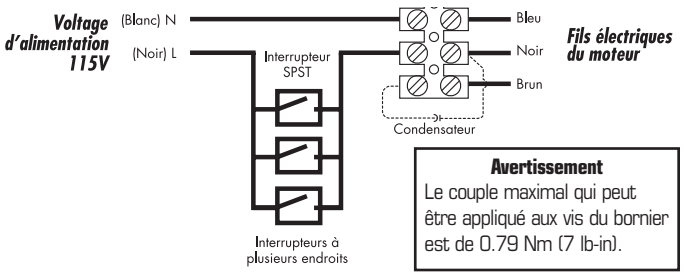

Avertissement
Le couple maximal qui peut être appliqué aux vis du bornier est de 0.79 Nm (7 lb-in).

DÉPANNAGE

Si le ventilateur ne fonctionne pas, vérifier ce qui suit:

1. Consultez les diagrammes de câblage (voir ci-dessous) pour vous assurer que la connexion est appropriée.
2. Contrôlez le fil de sortie du moteur, les fils de sortie du condensateur et l'alimentation électrique pour vous assurer d'un bon contact.
3. Si possible, utilisez un appareil de mesure pour déterminer la continuité à travers les fils de sortie du moteur du ventilateur. Pour faire ceci, le condensateur doit être débranché (ne pas tester le condensateur - il ne montrera pas la continuité). Si les fils de sortie du moteur montrent la continuité, consultez l'usine pour un condensateur de rechange.

INSTRUCTION POUR L'ENTRETIEN

Puisque les roulements du ventilateur sont scellés et équipés d'un matériel lubrifiant interne, aucune lubrification supplémentaire n'est nécessaire.

INSTALACIÓN DEL SOPORTE DE MONTAJE Y EL VENTILADOR

1. Al ubicar el ventilador, hay que considerar las siguientes normas: a) el montaje que reduzca al mínimo el ruido que produce el ventilador en operación; b) el tipo de aplicación; y c) el acceso para facilitar el mantenimiento.

a) El ventilador se debe montar lo más lejos posible de la salida a fin de minimizar el retroceso del ruido del ventilador a través del conducto. Si se ha de emplear el ventilador como refuerzo para mover el aire entre dos cuartos, acaso resulte óptimo montarlo en un punto céntrico a lo largo del conducto. Un conducto flexible aislado (recomendado para cualquier instalación de escape para baños) resulta mucho más silencioso. Fantech recomienda un mínimo de 8 pies de conducto flexible aislado entre cualquier rejilla de escape y el ventilador, para lograr un mínimo de ruido.

b) El ventilador debe situarse donde haya acceso suficiente para el mantenimiento.

Monte el suporte (NB)

Monte el ventilador.

2. Mediante los tornillos tirafondo, fije el soporte de montaje (NB o MB) a una viga estructural en el sitio escogido. Aunque el ventilador se puede montar en cualquier punto a lo largo del conducto y a cualquier ángulo, es recomendable montarlo en posición vertical para reducir el cúmulo de condensado en el ventilador. Si hay que recurrir a una instalación horizontal, dando lugar a la posible condensación, envuelva el ventilador con aislante o bien perfore un agujero de 1/2" en el fondo de la carcasa (junto con un adaptador de NPT [provisto por otros] y tubería de drenaje) para desalojar el condensado.

3. Fije el ventilador al soporte de montaje mediante los tornillos de hojalata suministrados. La caja de conexiones se debe ubicar para facilitar el acceso. El soporte de montaje se ha provisto de guardaojales amortiguadores de goma que impiden la transmisión de ruidos a través de la estructura. Tenga cuidado de no sobreapretarlos. De paso, tenga cuidado de no desgarrar la carcasa de plástico. Los tornillos son autorroscantes y no requieren la perforación de pilotos. No obstante, recomendamos perforar pilotos (de no más de 3/32").

Monte el suporte (MB)

Monte el ventilador

4. Conecte los conductos de entrada y salida del ventilador mediante abrazaderas CB o con cinta especial para conductos. Al usarse conductos aislados, es recomendable fijar el núcleo de vinilo con abrazaderas o con cinta a la entrada y a la salida, de manera que la película impermeable que rodea el aislante quede fijada a la carcasa del ventilador con cinta para conductos.

NOTA: Se puede invertir el orden de los pasos 2 y 3.

El conducto que va de este ventilador al exterior del edificio tiene un fuerte impacto en el flujo del aire, el ruido y la energía del ventilador. Utilice el enrutamiento del conducto más corto y recto posible para obtener un mejor rendimiento, y evite instalar el ventilador con conductos más pequeños de lo recomendado. La aplicación de un aislante alrededor de los conductos puede reducir la pérdida de energía y evitar la creación de moho. Los ventiladores que se instalen usando los conductos existentes pueden no alcanzar su flujo de aire nominal.

Use sellador de conducto, masilla, cinta adhesiva a todas las aberturas, incluyendo las aberturas alrededor de la pared, interior del techo y en todo alrededor de la construcción de las penetraciones del exterior, para evitar fugas de aire y optimizar el rendimiento de aire.

INSTALACIÓN DE LA REJILLA DG DE ENTRADA Y ESCAPE

Si se ha comprado el conjunto de Respiradero y Luz, éstos se suministran con instrucciones particulares de instalación que reemplazan los Pasos 1 al 4.

1. Seleccio ne el punto de montaje de la rejilla dentro del ambiente a ventilar. Para facilitar la instalación, se debe tomar en consideración la ubicación de las vigas enmarcadoras dentro de las paredes, o las viguetas de apoyo del techo. El Collarín/mariposa viene provisto de una cinta perforada para montaje directo en una viga o vigueta. Deje suficiente espacio entre el collarín/mariposa y la viga para fijar el conducto. Si la ubicación de la rejilla no permite el montaje directo, se debe emplear un travesaño auxiliar fijado al enmarcamiento.

Monte el collarin

2. Coloque el collarín/mariposa en el sitio deseado, y trace un círculo sobre la superficie. Desde el interior de la habitación, haga un corte a través de la superficie. Favor observar: Para poder asegurar un acabado más liso al hacer un montaje a través de un techo de cartón-piedra, recomendamos hacer el corte con una navaja.

Vista lateral de la rejilla y el collarin

3. Desde la buhardilla o el entresuelo, coloque el collarín de montaje en el agujero hasta que el borde del collarín quede al ras de la pared interior o la superficie del techo. Fije el collarín a la viga de apoyo con los tornillos tirafondo de 2" suministrados. Conecte el conducto. Asegúrelo con abrazaderas CB o FC y/o cinta para conductos. Si se trata de instalar la mariposa dentro de un conducto de tipo rígido, se deben emplear abrazaderas de tipo FC o cinta para conductos.Veuillez noter : Afin d'assurer une finition plus lisse pour un montage sur un toit de pierres ou un toit de tuiles il est recommandé qu'un couteau rasoir soit utilisé pour couper..

   FAVOR NOTAR: Al conectar un conducto flexible al conjunto de collarín/mariposa, si hace falta un codo inmediatamente a renglón seguido, tenga cuidado de instalar el codo con un doblez "suave" para permitir que las hojas de la mariposa operen debidamente.

4. Enganche la rejilla en el collarín/mariposa de montaje. La rejilla debe oprimirse para que quede bien firme y hermética. Si queda una rajadura entre el collarín y el techo, se debe calafatear para evitar fugas de aire. Para la limpieza posterior, la rejilla se puede extraer y limpiar.

Sugerencias para la Instalación del Conducto Flexible

Recomendamos encarecidamente usar conducto flexible aislado para aplicaciones de escape de baños donde quiera que el código local lo permita, donde el conducto pase a través de espacios no acondicionados o donde el ruido sea un factor de importancia. La ausencia del aislante podría causar un exceso de condensación dentro del conducto, amén del exceso de ruido dentro del cuarto. Para lograr la instalación más silenciosa posible, Fantech recomienda un mínimo de 8 pies de conducto flexible aislado entre cualquier rejilla de escape y el ventilador. Al montar un conducto de tipo flexible, el mismo se debe estirar lo más apretado y recto posible. De lo contrario, el sistema podría mucho rendimiento. El conducto flexible se debe conectar al ventilador con abrazaderas de tipo CB o con cinta para conductos. Todas las conexiones deben quedar lo más herméticas posible para lograr un máximo de rendimiento.

CONEXIÓN ELÉCTRICA

1. Desenrosque los tornillos de montaje de la tapa de la caja de conexiones en el costado del ventilador. Todas las conexiones del motor del ventilador están precableadas a una regleta eléctrica. Hace falta un conector pasahilos protector 3/8" de tipo romex para sujeción del cableado a través del agujero ciego provisto en el costado de la caja de conexiones.

Cableado impermeable - Vista de Planta (Para aplicaciones al exterior).

2. Pase la alimentación eléctrica a través de conector romex y el agujero ciego del ventilador. Tenga cuidado de colocar la tuerca conectora encima del cableado entrante a la caja de conexiones.
   En la regleta de conexiones hay dos lumbreras abiertas. Usando un pequeño destornillador común, apriete el cable neutro (de color blanco) de la alimentación eléctrica debajo de la lumbrera marcada "N" en la regleta. Apriete el hilo de Línea (negro) de la alimentación eléctrica debajo de la lumbrera marcada "L". Debido a que el motor del ventilador está aislado por su carcasa de plástico, no hay que conectarlo a tierra.

Cableado en Romex - Vista de Planta

3. Asegure el conector romex. Asegure la alimentación entrante con el conector romex. Tape de nuevo la caja de conexiones del ventilador. Todas las conexiones del motor del ventilador y del capacitor vienen precableadas de fábrica. No hace falta ningún cableado adicional para el ventlador.

DIAGRAMAS DE ALAMBRADO

Todos los modelos
Con controlador de velocidad de motor

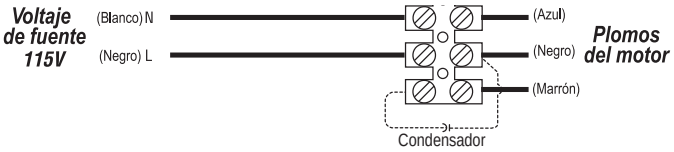

Sin controlador de velocidad de motor

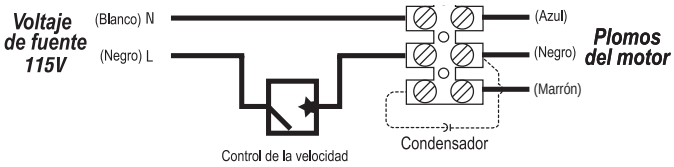

Diagrama de cableado para conmutación desde varios puntos

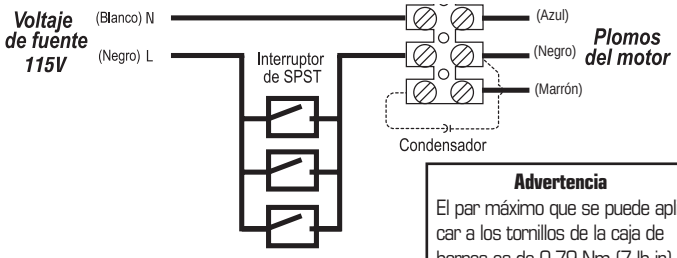

Advertencia
El par máximo que se puede aplicar a los tornillos de la caja de bornes es de 0.79 Nm (7 lb-in).

ANÁLISIS DE FALLAS

Si le ventilateur ne fonctionne pas, vérifier ce qui suit:

1. Consultez les diagrammes de câblage (voir ci-dessous) pour vous assurer que la connexion est appropriée.
2. Contrôlez le fil de sortie du moteur, les fils de sortie du condensateur et l'alimentation électrique pour vous assurer d'un bon contact.
3. Si possible, utilisez un appareil de mesure pour déterminer la continuité à travers les fils de sortie du moteur du ventilateur. Pour faire ceci, le condensateur doit être débranché (ne pas tester le condensateur - il ne montrera pas la continuité). Si les fils de sortie du moteur montrent la continuité, consultez l'usine pour un condensateur de rechange.

INSTRUCCIONES DE MANTENIMIENTO

Puisque les roulements du ventilateur sont scellés et équipés d'un matériel lubrifiant interne, aucune lubrification supplémentaire n'est nécessaire.

WARRANTY

Five (5) Year Warranty

This warranty supersedes all prior warranties

DURING ENTIRE WARRANTY PERIOD:
Fantech will repair or replace any part which has a factory defect in workmanship or material. Product may need to be returned to the Fantech factory, together with a copy of the bill of sale and identified with RMA number.

FOR FACTORY RETURN YOU MUST:

- Have a Return Materials Authorization (RMA) number. This may be obtained by calling Fantech either in the USA at 1.800.747.1762 or in CANADA at 1.800.565.3548. Please have bill of sale available.
- The RMA number must be clearly written on the outside of the carton, or the carton will be refused.
- All parts and/or product will be repaired/replaced and shipped back to buyer; no credit will be issued.

OR
The Distributor may place an order for the warranty part and/or product and is invoiced. The Distributor will receive a credit equal to the invoice only after product is returned prepaid and verified to be defective.

FANTECH WARRANTY TERMS DO NOT PROVIDE FOR REPLACEMENT WITHOUT CHARGE PRIOR TO INSPECTION FOR A DEFECT. REPLACEMENTS ISSUED IN ADVANCE OF DEFECT INSPECTION ARE INVOICED, AND CREDIT IS PENDING INSPECTION OF RETURNED MATERIAL. DEFECTIVE MATERIAL RETURNED BY END USERS SHOULD NOT BE REPLACED BY THE DISTRIBUTOR WITHOUT CHARGE TO THE END USER, AS CREDIT TO DISTRIBUTOR'S ACCOUNT WILL BE PENDING INSPECTION AND VERIFICATION OF ACTUAL DEFECT BY FANTECH.

THE FOLLOWING WARRANTIES DO NOT APPLY:

- Damages from shipping, either concealed or visible. Claim must be filed with freight company.
- Damages resulting from improper wiring or installation.
- Damages or failure caused by acts of God, or resulting from improper consumer procedures, such as:
  1. Improper maintenance
  2. Misuse, abuse, abnormal use, or accident, and
  3. Incorrect electrical voltage or current.
- Removal or any alteration made on the Fantech label control number or date of manufacture.
- Any other warranty, expressed, implied or written, and to any consequential or incidental damages, loss or property, revenues, or profit, or costs of removal, installation or reinstallation, for any breach of warranty.

WARRANTY VALIDATION

- The user must keep a copy of the bill of sale to verify purchase date.
- These warranties give you specific legal rights, and are subject to an applicable consumer protection legislation. You may have additional rights which vary from state to state.

Limitation of Warranty and Liability

This warranty does not apply to any Fantech product or part which has failed as a result of faulty installation or abuse, incorrect electrical connections or alterations made by others, or use under abnormal operating conditions or misapplication of the product or parts. We will not approve for payment any repair not made by us or our authorized agent without prior written consent. The foregoing shall constitute our sole and exclusive warranty and our sole exclusive liability, and is in lieu of any other warranties, whether written, oral, implied or statutory. There are no warranties which extend beyond the description on the page hereof. In no event, whether as a result of breach of contract, or warranty or alleged negligence, defect incorrect advice or other causes, shall Fantech be liable for special or consequential damages, including, but not limited to, loss of profits or revenue, loss of use of equipment or any other associated equipment, cost of capital, cost of substitute equipment, facilities or services, downtime costs, or claims of customers of purchase for such damages. Fantech neither assumes or authorizes any person to assume for it any other liability in connection with the sale of product(s) or part(s). Some jurisdictions do not allow the exclusion or limitation of incidental or consequential damages so the above limitations and exclusions may not apply to you.

Warning

Fantech products are designed and manufactured to provide reliable performance, but they are not guaranteed to be 100% free from defects. Even reliable products will experience occasional failures and this possibility should be recognized by the user. If these products are used in a life support ventilation system where failure could result in loss or injury, the user should provide adequate backup ventilation, supplementary natural ventilation, failure alarm system, or acknowledge willingness to accept the risk of such loss or injury.

GARANTIE

Garantie de 5 ans

Cette garantie remplace toutes les garanties précédentes.

DURANT TOUTE LA PÉRIODE DE GARANTIE:
Fantech s'engage à réparer ou à remplacer toute pièce présentant un défaut d'usine en matière de qualité d'exécution ou de matériau. Il sera peut être nécessaire de retourner le produit à l'usine Fantech, accompagné d'une copie du contrat de vente et du numéro d'autorisation de retour.

POUR RETOURNER UN PRODUIT À L'USINE, VOUS DEVEZ:

- Obtenir un numéro d'autorisation de retour; pour ce faire, communiquer avec Fantech aux États-Unis au numéro 1.800.747.1762, ou au Canada, au numéro 1.800.565.3548. Veuillez avoir votre contrat de vente à portée de la main.
- S'assurer que le numéro d'autorisation de retour est lisible sur l'extérieur de la boîte, sinon la boîte sera refusée.
- Toutes les pièces et/ou le produit seront réparés ou remplacés puis retournés à l'acheteur. Aucun crédit ne sera accordé.

OU
Le Distributeur peut commander une pièce ou un produit couvert par la garantie; la facture lui sera envoyée. Le distributeur ne sera crédité du montant de sa facture qu'après que le produit a été retourné port payé et qu'il a été trouvé défectueux.

LES TERMES DE LA GARANTIE DE Fantech NE PRÉVOIENT PAS DE REMPLACEMENT SANS FRAIS AVANT QUE LA PIÈCE OU LE PRODUIT DÉFECTUEUX AIT ÉTÉ INSPECTÉ. LES PRODUITS OU PIÈCES REMPLACÉS AVANT L'INSPECTION DE LA DÉFECTUOSITÉ SERONT FACTURÉS ET LE MONTANT DU CRÉDIT EST FONCTION DE L'INSPECTION DE LA PIÈCE OU DU PRODUIT RETOURNÉ. LE DISTRIBUTEUR NE DOIT PAS REMPLACER SANS FRAIS POUR L'UTILISATEUR FINAL L'ÉQUIPEMENT DÉFECTUEUX RETOURNÉ PAR L'UTILISATEUR FINAL, CAR LE COMPTE DU DISTRIBUTEUR NE SERA CRÉDITÉ QU'APRÈS L'INSPECTION ET LA VÉRIFICATION PAR FANTECH DE LA DÉFECTUOSITÉ.

LES GARANTIES NE S'APPLIQUENT PAS DANS LES CAS SUIVANTS:

- Dommages dus au transport (dissimulés ou visibles). Les réclamations doivent être faites à la compagnie de fret.
- Dommages dus au mauvais câblage ou à l'installation inappropriée.
- Dommages ou défectuosité causés par une calamité naturelle ou résultant d'une procédure irrégulière de l'acheteur, notamment :
  1. Entretien irrégulier
  2. Mauvais usage, usage abusif, usage anormal ou accident
  3. Tension ou courant électrique incorrect
- Enlèvement ou toute modification du numéro de contrôle ou de la date de fabrication de l'étiquette Fantech
- Toute autre garantie expresse, écrite ou implicite, pour les dommages accidentels ou indirects, perte de biens, de recettes, manque à gagner ou coûts relatifs à la dépose, à l'installation ou à la réinstallation, en cas de violation de garantie.

CERTIFICATION DE LA GARANTIE:

- L'utilisateur doit conserver une copie du contrat de vente pour confirmer la date d'achat.
- Les présentes garanties vous donnent des droits spécifiques reconnus par la loi et sont régies par les lois sur la protection du consommateur appropriées. Il est possible que différents états offrent d'autres droits.

Limites de garanties et de responsabilités

Cette garantie ne s'applique à aucun produit de Fantech ou à aucune pièce détachée dont la défectuosité relève d'une erreur d'installation ou d'abus ou de mauvaise installation électrique ou dut à des modifications extérieures ou utilisées dans des conditions anormales ou encore une mauvaise installation du produit ou des pièces détachées. Nous n'approuverons aucun remboursement pour des réparations qui ne sont pas effectuées par un agent américain ou un agent autorisé sans un accord écrit. Ce dernier constituera notre seule et exclusive garantie et notre seule exclusive responsabilité et tient lieu de toute autre garantie ou bien écrite ou orale implicite ou statuaire. Aucune garantie ne s'appliquera au-delà des descriptions faites de la page ci-dessus. En aucun cas, que ce soit pour une rupture de contrat ou de garanties ou des dommages dut à la négligence ou a des conseils incorrects ou autres causes, Fantech ne pourra être tenu pour responsable des dommages particuliers ou consécutifs, incluant mais pas limités aux pertes et profits ou bénéfices perte de matériel ou autres matériels associés. Coût du capital, coût des équipements de remplacement, matériels ou services, coût de temps d'arrêt ou les réclamations des clients pour de tels dommages. Fantech ne délègue ou autorise aucune personne d'assumer sa responsabilité sur la vente du produit ou des pièces détachées. Certaines juridictions ne permettent pas l'exclusion de la limitation des dommages accidentels ou consécutifs ainsi ces limitations ci-dessus et les exclusions ne s'appliquent pas à vous.

Avertissement

Les produits de Fantech sont conçus et fabriqués pour produire des performances fiables, mais il n'y a aucune garantie qu'ils soient 100% sans défaut. Les plus produits les plus fiables ont occasionnellement des défectuosités et cette possibilité devraient être reconnu par les usagers. Si ces produits sont utilisés comme une source de ventilation ou leur panne risque de mettre en danger des vies humaines ou entraîner des blessures, les usagers devront avoir une source de ventilation de secours en addition à une ventilation naturelle, le défaut de système d'alarme ou la connaissance de ces conditions entraînent sa responsabilité envers de telles pertes ou blessures.

GARANTIA

Garantia por cinco (5) Años

Esta garantia de sin efecto cualquier otra garantia anterior

DURANTE EL PERÍODO INTEGRO DE LA GARANTÍA:
Fantech reparará o reemplazará toda parte que presente un defecto en el material o en la mano de obra. Es posible que el producto deba ser devuelto a la fabrica Fantech, juntamente con una copia de la constancia de compraventa e identificado con el número de RMA.

PARA DEVOLUCIÓN A FÁBRICA USTED DEBE:
- Tener un número de Autorización de Devolución de Material (RMA). Esto se puede obtener llamando a Fantech ya sea en los Estados Unidos al 1.800.747.1762
- en Canadá al 1.800.565.3548. Tenga a mano la constancia de compraventa.
- El número de RMA deberá estar claramente escrito en la parte exterior de la caja, de lo contrario la caja será rechazada.
- Todas las partes y/o el producto serán reparados/reemplazados y devueltos al comprador; no se otorgará crédito.

O BIEN
El Distribuidor puede colocar una orden por la parte y/o producto en garantía y facturarla/o. El Distribuidor recibirá un crédito igual a la factura sólo después de que se haya devuelto el producto con pago previo y con verificación de defecto.

LAS CONDICIONES DE LA GARANTÍA DE FANTECH NO CONTEMPLAN EL REEMPLAZO SIN CARGO ANTES DE REALIZAR LA INSPECCIÓN PARA DETECTAR DEFECTOS. LOS REEMPLAZOS EMITIDOS ANTES DE INSPECCIONAR POR DEFECTOS SON FACTURADOS, Y EL CRÉDITO ESTÁ A LA ESPERA DE INSPECCIÓN DEL MATERIAL DEVUELTO. EL MATERIAL DEFECTUOSO DEVUELTO POR LOS USUARIOS FINALES NO DEBERÁ SER REEMPLAZADO POR EL DISTRIBUIDOR SIN CARGO PARA EL USUARIO FINAL, YA QUE EL CRÉDITO DE LA CUENTA DEL DISTRIBUIDOR ESTARÁ A LA ESPERA DE INSPECCIÓN Y VERIFICACIÓN DEL DEFECTO REAL POR FANTECH.

LAS SIGUIENTES GARANTÍAS NO SE APLICAN:
- Daños durante el envío, ya sean encubiertos o visibles. Se deberá presentar el reclamo a la compañía transportadora.
- Daños ocasionados por cableado o instalación indebidos.
- Daños o fallas causados por hechos fortuitos, u ocasionados por procedimientos impropios por parte del usuario, tales como:
  1. Mantenimiento indebido
  2. Uso indebido, abuso, uso anormal o accidente y
  3. Tensión o corriente eléctrica incorrecta.
- Remoción o modificación realizada al número de control del rótulo de Fantech o de la fecha de fabricación.
- Toda otra garantía, expresa, implícita o escrita, daños y perjuicios, pérdida de propiedad, de ingresos, o de beneficios, o costo de remoción, instalación o reinstalación por incumplimiento de la garantía.

VALIDACIÓN DE LA GARANTÍA
- El usuario debe conservar una copia de la constancia de compraventa para verificar la fecha de compra.
- Estas garantías le otorgan derechos legales específicos, y están sujetas a una legislación aplicable para protección del consumidor. Usted puede tener derechos adicionales que varían de estado en estado.

Limitacion de Garantia y Responsabilidad Civil

Esta garantía no cubre ningún producto o pieza de Fantech que haya fallado por mala instalación, abuso, conexión eléctrica incorrecta o por alteraciones hechas por terceros, o por utilización bajo condiciones anormales de operación, o por aplicación incorrecta del producto o de las piezas. Nosotros no aprobamos el pago de ninguna reparación que no se haya realizado por nosotros o por nuestro agente autorizado previo consentimiento por escrito. Lo que antecede constituirá nuestra única y exclusiva garantía y nuestra única y exclusiva responsabilidad; y obra en lugar de cualquier otra garantía, ya sea escrita, verbal, tácita o estatutaria. No hay ninguna garantía que vaya más allá de lo que está descrito en esta página. Bajo ninguna circunstancia responderá Fantech, ya sea por incumplimiento de contrato o garantía ni por alegada negligencia, defecto, consejos incorrectos u otra causa, por daños especiales o consiguientes, incluso, pero no de manera única, pérdida de ganancias o ingresos, equipo cesante o cualquier otra pérdida relativa a equipos asociados; el costo del capital, costo de equipos, instalaciones o servicios sustitutos, tiempo ocioso o reclamos de clientes por compras incurridas por tales daños. Fantech ni asume ni autoriza a ninguna persona a que asuma a su nombre ninguna otra responsabilidad relativa a la venta de productos o piezas. Debido a que algunos distritos jurisdiccionales no permiten la exclusión o limitación por daños incidentales o consiguientes, puede que las limitaciones y limitaciones antes descritas no lo afe cten a Ud.

Advertencia

Aunque los productos de Fantech están diseñados y son fabricados para un rendimiento seguro, no garantizamos que estén libres de defectos al 100%. Hasta productos confiables a veces fallan; y el usuario debe reconocer esta posibilidad. Si estos productos se utilizan en un sistema de ventilación vital en donde una falla pudiera dar lugar a pérdidas o lesiones, el usuario debe disponer de una ventilación adecuada de reserva, ventilación natural suplemental, sistema de alarma de fallas, o expresar su voluntad de aceptar el riesgo de tales pérdidas o lesiones.

NOTES

Fantech reserves the right to make technical changes.
For updated documentation please refer to www.fantech.net

Fantech se réserve le droit de faire des changements techniques. Pour de la documentation à jour, s'il vous plaît se référer au www.fantech.net

Fantech se reserva el derecho de hacer modificaciones técnicas en cualquier momento. Para obtener la documentación actualizada, por favor consulte www.fantech.net

Fantech®

fantech®
a systemair company

Inline Fans Options

Featuring TD-MIXVENT/TD-SILENT

The World's Leading Producer of Air Movement Products

Soler&Palau Ventilation Group

TD_0812
August 2012

Table of Contents

Overview TD-MIXVENT & TD-SILENT Series....2
Mixed Flow vs. Axial & Centrifugal Fans....3
TD-MIXVENT General Details....4
TD-MIXVENT Installation & Maintenance....5
TD-MIXVENT Technical Specifications....6-7
TD-MIXVENT KIT-Bathroom Kits....8
TD-SILENT General Details....9
TD-SILENT Innovative Features....10
TD-SILENT Easy Installation....11
TD-SILENT Technical Specifications....12-13
TD-MIXVENT & TD-SILENT Accessories....14-18
TD-MIXVENT & TD-SILENT Practical Installations....19
PV-Powervent & SWF Sidewall....20

Overview TD-MIXVENT & TD-SILENT Series

Compact Size-TD Fans require minimum space

The S&P TD-MIXVENT & TD-SILENT series of in-line duct fans have been specially designed to maximize the airflow performance with minimal noise levels within the smallest and most compact of housing sizes. This makes the TD-MIXVENT & TD-SILENT series the ultimate solution for small to medium sized ventilation installations which require a high airflow to pressure ratio and occupy only the minimum space possible. Example: false ceiling voids, cabinets and many other limited space environments.

Easy to Install...fit and forget!

All the models in the TD-MIXVENT & TD-SILENT range have been designed with the professional contractor/engineer in mind. All models include a “removable body” feature that enables the motor-impeller assembly to be completely removed or replaced without the need to interfere with the attached ducting.

Internal parts can be easily removed for mounting & servicing

Multitude of features-high specification

All models within the TD-MIXVENT & TD-SILENT range incorporate a powerful mixed flow impeller and internal air vanes located at the discharge end of the fan housing. This impeller and guide vane combination provides a smooth laminar air flow which in turn minimizes turbulence and noise, and generates an **excellent air flow to pressure performance ratio.**

Description

All of the TD-fans include the combination of a powerful motor, factory installed, to a mixed flow impeller. This motor and impeller combination enables the TD-fans to deliver high airflow performances with minimum noise generation against high static pressures typically found in ducted ventilation systems. The unique design of the support brackets, allows the motor and impeller assembly to be fitted or removed without dismantling the adjacent ducting and therefore, facilitating any installation or maintenance. The internal aerodynamic design of the TD-MIXVENT & TD-SILENT fans enable the units to generate large air volumes and pressures with the minimum of in-duct or radiated noise. As an additional standard advantage, TD-MIXVENT fans are fitted with a direct connection two-speed motor. The TD-fans offer the ideal in-line duct fan solution for a wide range of HVAC ventilation applications.

Mixed Flow Fans vs. Axial & Centrifugal Fans

	Noise Level	Air Volume	Static Pressure
Axial Fans • Low noise levels • High air volumes • Very little static pressure capability*	High Low	High Low	High Low
Centrifugal Fans • Higher noise levels • Lower air volumes • Very high static pressure capability*	High Low	High Low	High Low
Mixed Flow Fans** • Low noise levels • High air volumes • Significant static pressure capability*	High Low	High Low	High Low

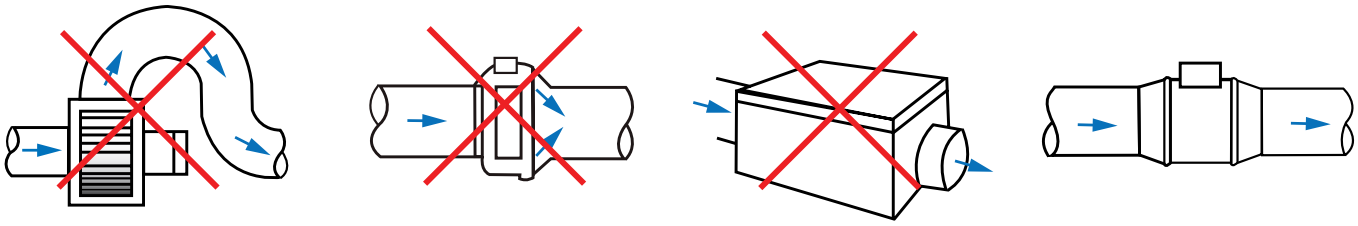

Classic Centrifugal | In-line Centrifugal | Ventilation Box | S&P's TD Fan

*Static pressure is the ability of the fan to overcome resistance such as long or complicated duct runs.

Mixed flow fans (TD series) offer the best of both axial and centrifugal fans and are suitable for most air movement applications. S&P's **TD-MIXVENT & TD-SILENT Series has all the benefits of a mixed flow fan, plus it requires minimal space and it is easy to install.

General Details of the TD-MIXVENT Range

S&P Exclusive Product

Low profile mixed flow fans, manufactured in plastic material (up to model 200) or in **galvanized steel** sheet protected with Epoxy paint (model 250 and 315), with external terminal box, removable motor-impeller assembly and adjustable single-phase motor, Class B, IP44.

Construction characteristics

	100	100x	125	150	200	250	315
Polypropylene housing	•	•	•	•	•		
Steel housing with epoxy coating						•	•
ABS fan blades	•	•	•	•	•		
Aluminum fan blades						•	•
Thermal link via fuse	•						
Thermal link with automatic reset		•	•	•	•	•	•
Permanently lubricated ball bearings	•	•	•	•	•	•	•
Speed controllable 2-speed motor	•	•	•	•	•	•	•

The extensive range of the TD-MIXVENT series makes it an effective solution for a wide range of residential and light commercial ventilation installations.

TD-MIXVENT Installation & Maintenance

Low Profile

The low profile of the fans in the TD-MIXVENT range makes them the ideal product for installations with low height limits, such as the case of suspended ceilings.

Easy to Install

1

Secure the support.

2

Make the connections.

3

Connect the ducts.

Flexibility in Location

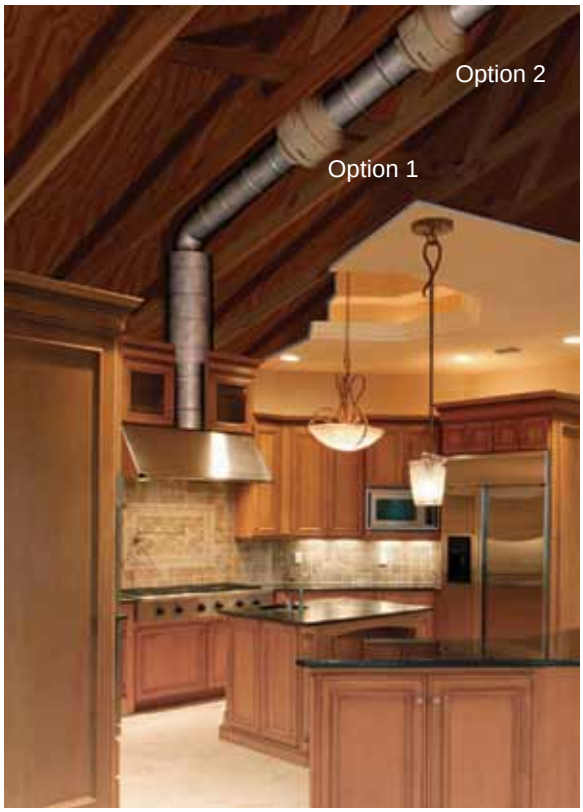

The fans can be connected at any point along the ventilation duct: along the duct or at the end.

Easy Maintenance

Removable body, for repair or cleaning, **without the need to touch the ducts.**

TD-MIXVENT Technical Specifications

Warranty
Five (5) year limited warranty.

Range
The TD-MIXVENT series consists of seven (7) nominal sized in-line fans. All models are specifically designed for direct connection in-line with industry standard diameter round ducting.

Construction
The TD-MIXVENT models 100, 100x, 125,150, and 200 are manufactured in tough reinforced plastic, models 250 and 315 have a metal casing and are finished in a tough epoxy-polyester paint coating. The TD fan duct connection flanges are manufactured from reinforced plastic, except for models 200, 250 and 315 which are constructed from epoxy-polyester coated metal.

Impellers
The impeller blades for models 100, 100x, 125, 150 and 200 are molded in tough ABS plastic. Models 250 and 315 are metal.

Motors
Models 100, 100x and 125 :
Single-phase, 120V 60Hz, shaded pole induction asynchronous motor in die cast aluminum. All motors include direct two speed connection and are also suitable for voltage speed control.
• Class II electrical insulation (model 100) & Class I (models 100x and 125)
• IP 44 Protection
• Class B Motor Insulation
• Safety auto reset Thermal Overload Protection (fuse type)
• Self-lubricating sleeve bearings.
• Suitable for working airstreams up to 104° F (40°C).

Models 150, 200, 250 and 315:
• Single-phase induction asynchronous motor, with permanent capacitor and external rotor constructed of die cast aluminum. Models 150, 200 and 315 include direct two speed connection and are also suitable for voltage speed control.
• Class I electrical insulation
• IP 44 Protection
• Thermal Overload Protection
• Class B Motor Insulation
• Sealed For Life, ball bearings
• Suitable for working airstreams up to 140° F (60°C).

Performance characteristics

All models include a direct two speed motor connection.

Model	Nom. RPM	Volts	Max. Watts	Speed	CFM v Static Pressure (SP) Ins. WG							Max. SP	Max operating temp. (ºF)	Wgt. (lbs)	Duct Dia. Ins.
					0”	0.125”	0.25”	0.375”	0.5”	0.75”	1.0”				
TD-100	2431	120	23	LS	97	81	51	-	-	-	-	.4	104	2	4”
	2516	120	26	HS	101	85	57	-	-	-	-	.4	104	2	4”
TD-100x	1556	120	20	LS	100	77	48	-	-	-	-	.375	104	4.4	4”
	2096	120	33	HS	135	113	90	53	-	-	-	.55	104	4.4	4”
TD-125	1633	120	24	LS	149	110	73	-	-	-	-	.35	104	4.4	5”
	2146	120	38	HS	197	168	133	86	22	-	-	.55	104	4.4	5”
TD-150	1709	120	54	LS	218	193	163	128	105	24	-	.8	140	4.4	6”
	2289	120	65	HS	293	273	250	227	206	131	35	1.15	140	4.4	6”
TD-200	2322	120	139	LS	476	422	373	317	260	40	-	1.38	140	8.8	8”
	2781	120	184	HS	538	495	458	418	367	190	10	1.625	140	8.8	8”
TD-250	2400	115	162	LS	541	475	418	355	295	218	170	2.03	140	19.8	10”
	3200	115	241	HS	754	715	680	640	606	520	405	2.53	140	19.8	10”
TD-315	2000	115	208	LS	751	670	545	420	285	190	130	1.62	140	30.9	12.4”
	2500	115	335	HS	1050	990	932	850	770	600	420	2.95	140	30.9	12.4”

Performance certified is for installation Type D: Ducted Inlet, Ducted Outlet. Performance ratings do not include the effects of appurtenances.

LS= Low Speed
HS = High Speed

S&P USA certifies that the TD range shown herein is licensed to bear the AMCA Seal. The ratings shown are based on tests and procedures performed in accordance with AMCA Publication 211 and comply with the requirements of the AMCA Certified Ratings Program.

The TD-MIXVENT Models 100, 100x and 150 are California Title 24 compliant and meet ASHRAE 62.2 when installed with a CVC and other TD models are compliant when installed with a 3 way switch and remotely mounted speed control.

TD 250 & 315 are UL listed for outdoor use.

Sound characteristics

Fan sound levels are measured in sones. At this time there are no sone level test standards available through HVI due to the fact that remote mounted fan noise levels are in proportion to the following: type of duct, length of duct, fan distance from the intake source and other miscellaneous factors. However, it is generally accepted that remote mounted venting is usually quieter than standard (in room) venting.

Dimensions (inches/mm)

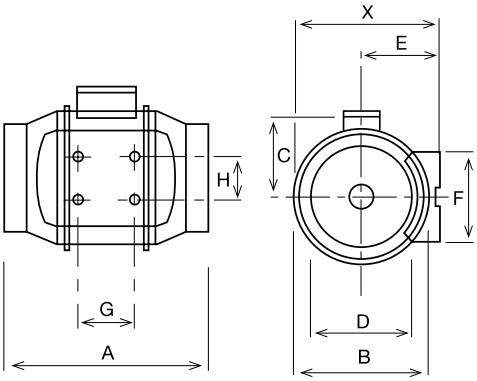

Model	X	A	B	C	D	E	F	G	H
TD-100	5 15/16 / 151	9 1/8 / 232	5 7/16 / 138	3 3/4 / 96	3 7/8 / 98	3 1/4 / 82	3 3/4 / 95	1 7/8 / 48	2 1/16 / 52
TD-100x	7 3/8 / 188	11 15/16 / 303	6 15/16 / 176	4 1/2 / 115	3 13/16 / 97	3 15/16 / 100	3 9/16 / 90	3 1/8 / 80	2 3/8 / 60
TD-125	7 3/8 / 188	10 3/16 / 258	6 15/16 / 176	4 1/2 / 115	4 13/16 / 123	3 15/16 / 100	3 9/16 / 90	3 1/8 / 80	2 3/8 / 60
TD-150	8 3/8 / 212	11 5/8 / 295	7 7/8 / 200	5 / 127	5 13/16 / 147	4 7/16 / 112	5 1/8 / 130	3 1/8 / 80	2 3/8 / 60
TD-200	9 3/16 / 233	11 7/8 / 302	8 9/16 / 217	5 9/16 / 141	7 13/16 / 198	4 7/8 / 124	5 1/2 / 140	3 15/16 / 100	3 11/16 / 94
TD-250	11 7/16 / 291	15 3/16 / 386	10 11/16 / 272	7 9/16 / 192	9 3/4 / 248	6 1/8 / 155	6 5/8 / 168	5 11/16 / 145	5 1/2 / 140
TD-315	14 / 356	17 11/16 / 450	13 1/4 / 336	8 13/16 / 224	12 5/16 / 312	7 3/8 / 188	8 1/4 / 210	7 3/16 / 182	7 / 178

TD-MIXVENT KIT Bathroom Kits

If the strongest, quietest, bathroom exhaust system is what you seek…look no further. S&P offers the perfect solution with the most options. The TD-MIXVENT fan kits provide all the hardware needed to complete a simple in-line ducted ventilation installation. The kit includes a powerful TD in-line fan and exterior and interior grilles (with or without lights). Available in both Standard Exhaust Kits, for venting a single location, and Deluxe Exhaust Kits, for venting multiple locations with one fan.

The TD-MIXVENT fan kit is the ideal solution for any simple in-line ducted fan installation.
All TD kits have standard 7-year warranty.

Standard Exhaust Kits

KIT-TD100
- 1 TD100 exhaust fan
- 1 plastic round grille (PG-100)
- 1 exterior louvered grille (PER-100W)
- Integral mounting bracket

KIT-TD100x
- 1 TD100x exhaust fan
- 1 plastic round grille (PG-100)
- 1 exterior louvered grille (PER-100W)
- Integral mounting bracket

KIT-TD150
- 1 TD150 exhaust fan
- 1 plastic round grille (PG-150)
- 1 exterior louvered grille (PER-150W)
- Integral mounting bracket

Deluxe Exhaust Kits

KIT-TD150-DV
- 1 TD150 exhaust fan
- 2 plastic round grilles (PG-150)
- 1 exterior louvered grille (PER-150W)
- 1 Y-fitting (SY-6)
- Integral mounting bracket

IMPORTANT: If venting in an non-insulated attic space, or in a cold climate, insulated flexible duct is strongly recommended for condensation issues.

Lighted Standard Exhaust Kits

KIT-TD100XL
- 1 TD100x exhaust fan
- 1 Vent Light with LED Bulb (VLED-100)
- Integral mounting bracket

KIT-TD100XH
- 1 TD100x exhaust fan
- 1 Vent Light with Halogen Bulb (VLH-100)
- Integral mounting bracket

KIT-TD100XF
- 1 TD100x exhaust fan
- 1 Vent Light with Fluorescent Bulb (VLF-100)
- Integral mounting bracket

Lighted Deluxe Exhaust Kits

KIT-TD150L
- 1 TD150 exhaust fan
- 2 Vent Lights with LED Bulb (VLED-100)
- 1 Y-fitting (SY44-6)
- Integral mounting bracket

KIT-TD150H
- 1 TD150 exhaust fan
- 2 Vent Lights with Halogen Bulb (VLH-100)
- 1 Y-fitting (SY44-6)
- Integral mounting bracket

KIT-TD150F
- 1 TD150 exhaust fan
- 2 Vent Lights with Fluorescent Bulb (VLF-100)
- 1 Y-fitting (SY44-6)
- Integral mounting bracket

General Details of the TD-SILENT Range

S&P Exclusive Product

As the name suggests these fans are extremely quiet, low profile “Mixed-flow” fans. Manufactured in plastic material with an external connection box, the body is easily dismantled with a two speed controllable 115V 60Hz motor. Sound waves are directed through the perforated inner skin and absorbed by a layer of sound-absorbent insulation. Plus the TD-SILENT is fitted with rubber gaskets on the inlet and outlet to absorb vibrations.

Construction characteristics

	100XS	150S	200S
Polypropylene housing	•	•	•
ABS fan blades	•	•	•
Thermal link with automatic reset	•	•	•
Permanently lubricated ball bearings	•	•	•
Speed controllable 2-speed motor	•	•	•

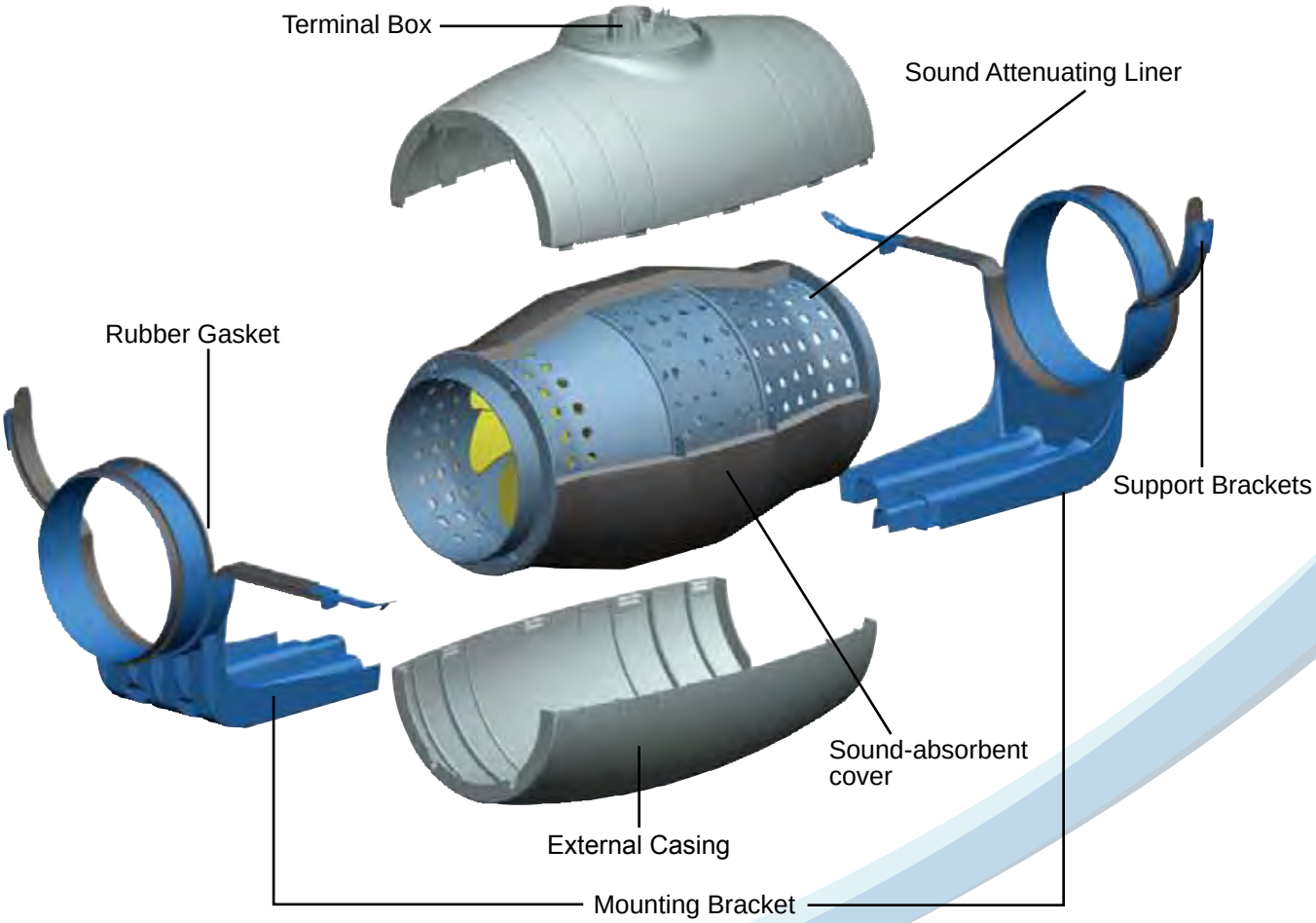

TD-SILENT Innovative Design Features

Low Profile

The low profile of the fans in the TD-SILENT range makes them the ideal product for installations with low height limits, such as the case of suspended ceilings.

Low Noise Levels

Sound waves produced inside the TD, are directed through the perforated inner skin and absorbed by the layer of sound-absorbent material.

Easy Maintenance

Bi-material support brackets, which in addition to simplifying installation, serve as joint seals.

Connection Box Rotates 360°

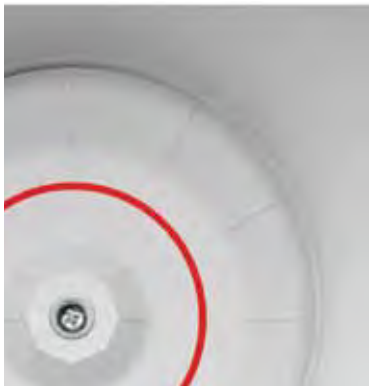

Connection box can be rotated 360º, to facilitate easy connection of the power cable.

Duct Air-Seals

Bi-material inlet and outlet incorporating a flexible washer to facilitate installation, absorb vibrations and provide a virtually **air-tight** seal.

Integral Mounting Bracket

Mounting bracket for installing on a wall or ceiling, incorporating twin-material support brackets for the motor section that absorbs vibration.

TD-SILENT Easy Installation

1

Loosen the clamps.

2

Open the clamps on both ends.

3

Remove the fan body.

4

Remove the terminal box lid.

5

Connect electrical supply.

6

Re-mount fan body by tightening the clamps.

TD-SILENT Technical Specifications

Warranty
Five (5) year limited warranty.

Range
The TD-SILENT consists of four (4) nominal sized in-line fans. All models are specifically designed for direct connection in-line with industry standard diameter round ducting.

Construction
The TD-SILENT models 100XS (4” or 5”), 150S and 200S are manufactured in tough reinforced plastic. Sound waves are directed through the perforated inner skin and absorbed by a layer of sound-absorbent insulation. Plus the TD-SILENT is fitted with rubber gaskets on the inlet and outlet to absorb vibrations.

Impellers
The impeller blades are molded in tough ABS plastic.

Motors
Models 100XS:
Single-phase, 120V 60Hz, shaded pole induction asynchronous motor in die cast aluminum. All motors include direct two speed connection and are also suitable for voltage speed control.

- Class I electrical insulation
- IP 44 Protection
- Class B Motor Insulation
- Safety auto reset Thermal Overload Protection (fuse type)
- Self-lubricating sleeve bearings.
- Suitable for working airstreams up to 104° F (40°C).

Models 150S and 200S:
Single-phase induction asynchronous motor, with permanent capacitor and external rotor in die cast aluminum. All models include direct two speed connection and are also suitable for voltage speed control.

- Suitable for working airstreams up to 140° F (60°C).
- Class I electrical insulation
- IP 44 Protection
- Thermal Overload Protection
- Class B Motor Insulation
- Sealed For Life, ball bearings

Code Approval

- All models have been independently safety tested by Underwriters Laboratories, Inc. and are UL and cUL Listed.
- Independently tested for Airflow Performance.
- The TD product range is certified by the Home Ventilating Institute (HVI) for Air Performance.
- All models are ENERGY STAR® qualified.
- All models are NAHB - National Green Building Green Approved.

Air Performance

All models include a direct two speed motor connection.

Model	Duct Dia. Ins.	Nom. RPM	Volts	Max. Watts	Speed	CFM v Static Pressure (SP) Ins. WG							Max. SP	Max operating temp. (ºF)	Wgt. (lbs)
						0”	0.125”	0.25”	0.375”	0.5”	0.75”	1.0”			
TD-100XS	4”	2000	120	21	LS	108	82	48	-	-	-	-	0.4	104	11.9
	4”	2500	120	35	HS	143	121	91	59	23	-	-	0.6	104	
	5”	2000	120	21	LS	147	110	63	-	-	-	-	0.4	104	
	5”	2500	120	36	HS	203	175	138	84	33	-	-	0.6	104	
TD-150S	6”	2200	120	55	LS	239	209	181	154	120	62	-	0.95	140	13.2
	6”	2700	120	65	HS	333	315	286	271	257	178	77	1.2	140	
TD-200S	8”	2000	120	115	LS	409	367	333	306	271	183	46	1.2	140	19.2
	8”	2200	120	122	HS	530	503	472	443	415	349	204	1.2	140	

The TD-SILENT Models 100XS and 150S are California Title 24 compliant and meet ASHRAE 62.2 when installed with a CVC and other TD models are compliant when installed with a 3 way switch and remotely mounted speed control.

Dimensions (inches)

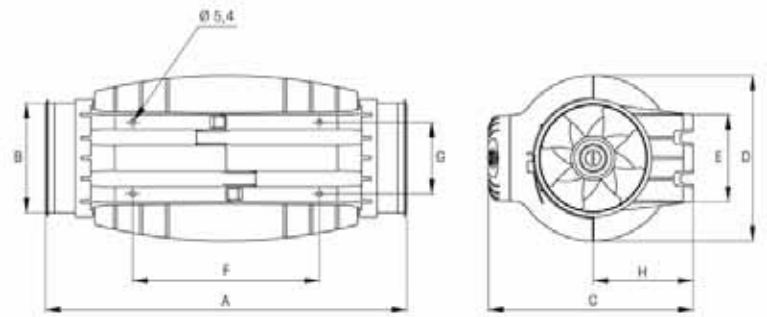

Model	A	B Ø	C	D Ø	E	F	G	H
TD-100XS	22 5/8	3 13/16	9 15/16	8 1/16	3 15/16	9 13/16	3 1/4	4 3/4
TD-150S	19 1/16	5 13/16	10 13/16	8 11/16	4 9/16	9 13/16	3 3/4	5 1/4
TD-200S	22 3/8	7 13/16	12 7/8	10 3/8	5 11/16	13 3/8	5 1/16	6 7/16

TD Fans & ASHRAE 62.2 Control Options

CVC - Continuous Ventilation Control

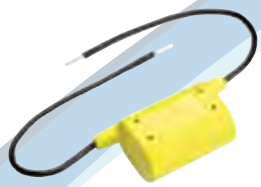

S&P's CVC allow a new or existing bath fan to run continuously on a low speed. In conjunction with an S&P TD fan a CVC will immediately improve the air quality in the home and reduce the damaging effects of moisture and mold.

The CVCs are designed to meet the requirements of ASHRAE 62.2 and the International Residential Code. In areas where ASHRAE 62.2 is not a requirement the CVC is still an economical choice to improve indoor air quality.

CVC Model	Fan Size	Application	Max. Flow	Continuous Flow @ .25"SP
CVC-100	100	Single Inlet	101 CFM	20 CFM
CVC-100x	100x	Single Inlet	135 CFM	20 CFM
CVC-150	150	Single Inlet	218 CFM	20 CFM
		Dual Inlet	293 CFM	40 CFM

Features

- Reduces remodeling costs, helps meet ASHRAE 62.2 requirements
- Perfect for homes, apartments, dorms, hotels and elderly housing
- Economical and easy to install in your existing wall box
- CVC works with most fan controls, i.e. motion sensors, timers, speed controllers.
- Improves the indoor air quality in your home
- Undetectable, efficient and effective
- Operates with any standard switch
- No programming required
- 120V, 60 Hz, 3A Maximum

Dimensions in Inches (mm)

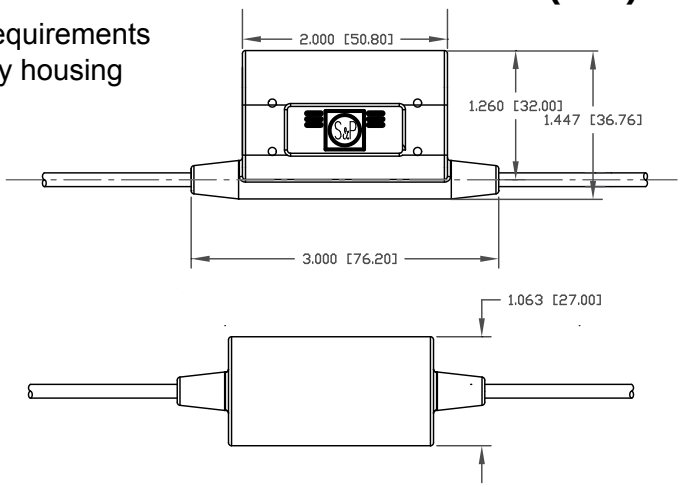

Easy Installation. . .

1

Attaches to any standard wall switch.

2

Simple 2 wire connection across the wall switch and fits into most standard wall/ junction boxes.

3

Completely installed in minutes!

TD-MIXVENT & TD-SILENT Accessories

MCA

Backdraft dampers are installed at the fans' discharge. They prevent the entry of odors, air currents and prevent heat leaks when the exhauster is not in operation.

Model	Type TD
MCA-100	100
MCA-125	125
MCA-150	150
MCA-200	200
MCA-250	250
MCA-315	315

Dimensions (inches/mm)

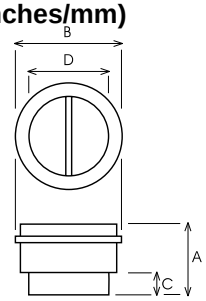

MCA-100-315

Model	A	B	C	D
MCA-100	4 3/16 / 107	4 3/8 / 111	1 1/4 / 31	3 11/16 / 94
MCA-125	4 3/16 / 107	5 3/8 / 136	1 1/4 / 31	4 11/16 / 119
MCA-150	4 3/4 / 121	6 7/16 / 163	1 3/8 / 35	5 13/16 / 147
MCA-200	5 3/16 / 131	8 7/16 / 214	1 3/8 / 35	7 3/4 / 197
MCA-250	6 3/16 / 164	10 3/8 / 264	1 5/8 / 42	9 3/4 / 248
MCA-315	8 1/16 / 205	13 / 330	1 15/16 / 50	12 5/16 / 312

MAR

Connections for rectangular ducts enable TD devices to be connected to a rectangular duct.

Model	Type TD	Nominal dim. of ducting L x H (in/mm)
MAR-100	100	9 x 6 / 224 x 140
MAR-125	125	9 x 6 / 224 x 140
MAR-150	150	11 x 7 / 280 x 180
MAR-200	200	12 x 8 / 315 x 200
MAR-250	250	16 x 10 / 400 x 250
MAR-315	315	20 x 12 / 500 x 315

Dimensions (inches/mm)

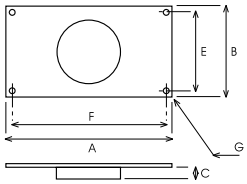

Model	A	B	C	E	F	G
MAR-100	10 3/8 / 264	7 1/16 / 180	1 5/16 / 33	6 5/16 / 160	9 5/8 / 244	3/8 / 9
MAR-125	10 3/8 / 264	7 1/16 / 180	1 5/16 / 33	6 5/16 / 160	9 5/8 / 244	3/8 / 9
MAR-150	12 5/8 / 320	8 11/16 / 220	1 7/16 / 37	7 7/8 / 200	11 13/16 / 300	3/8 / 9
MAR-200	14 / 355	9 7/16 / 240	1 7/16 / 37	8 11/16 / 220	13 3/16 / 335	3/8 / 9
MAR-250	17 5/16 / 440	11 7/16 / 290	1 5/8 / 42	10 5/8 / 270	16 9/16 / 420	3/8 / 9
MAR-315	21 1/4 / 540	14 / 355	2 1/16 / 52	14 / 355	20 1/2 / 520	3/8 / 9

MRJ

Grilles fit on the suction and the discharge sides of the installation. They prevent the entry of foreign bodies which could damage the fan.

Model	Type TD
MRJ100	100
MRJ125	125
MRJ150	150
MRJ200	200
MRJ250	250
MRJ315	315

MBR

Flanges enable TD devices to connect in a series.

Model	Type TD
MBR-125	125
MBR-150	150
MBR-200	200
MBR-250	250

TD Bathroom Exhaust Grilles

Featuring Vent Lights and Premium Grilles

S&P's Grille Options give you the choice of seven (7) aesthetically pleasing grilles designed to match any bathroom decor. You can choose from our Vent Lights, Premium Grilles or Adjustable Grilles to fit your needs.

These grilles are designed to be used exclusively with one of S&P's TD remotely mounted inline for virtually silent bathroom ventilation. Inline fans give you the option to mount your grille over the shower, toilet, tub, or in multiple locations (dual vent).

With S&P's Grille Options the choice is yours!

Vent Lights

Available with LED Bulbs

S&P's new Vent Lights give you ventilation that is *"Out-of-Sight and Out-of-Mind"!* The Vent Lights appear to be a regular can light, and when combined with a remotely mounted fan, the noise and unsightly look of the traditional bathroom fan are gone! The Vent Lights are aesthetically pleasing grilles with lights that will match any bathroom decor.

Model	Description
VLED-100	Vent Light with PAR30 LED Bulb
VLH-100	Vent Light with PAR30 Halogen Bulb
VLF-100	Vent Light with Energy Star Rated Compact Fluorescent Bulb

Dimensions (inches)

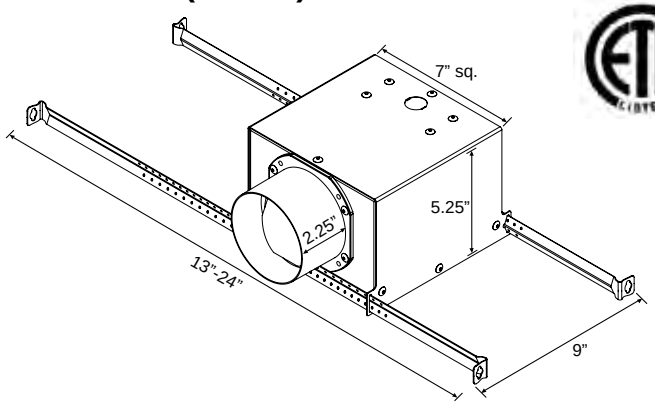

Features:

- Longer duct collar for 4" duct
- Extendable hanger bars up to 24"
- 7.5" grille
- Built-in backdraft damper
- 3 bulb options

Why Choose the Vent Light with LED Bulbs?

S&P's respect for the environment extends to its Vent Lights with the optional LED Bulb. The benefits to the LED Bulbs include:

- Built to last a minimum of 60,000 hours, plus the LED's use a fraction of the energy that a traditional incandescent or halogen lamp uses
- LED's contain no mercury so they are easy to dispose of, unlike other energy efficient bulbs
- The LED lamps run cool and are shock resistant, making them safer for use in your home

Premium Grilles

PG

S&P's premium grilles come standard with steel collars for easy mounting and installation.

Model	Description
PG-100	4" Plastic Grille with 4" Steel Collar
PG-150	6" Plastic Grille with 6" Steel Collar

Grille Dimensions (in inches)

Grille	Dia.	Height	Fits Duct Dia.	Fits Collars
PG-150G	8 1/8	1 5/8	6"	PG-150D
PG-100G	4 5/8	1 1/2	4"	PG-100D

Collar Dimensions (in inches)

PG Collar

Collar	Diameter	Length
PG-100D	3 3/4	3 1/4
PG-150D	5 3/4	4 5/8

Adjustable Grilles

BOR/BOC

Exhaust grilles for bathrooms, toilets and other small rooms. All models offer an adjustable central valve to regulate the airflow.

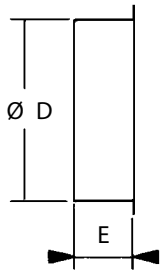

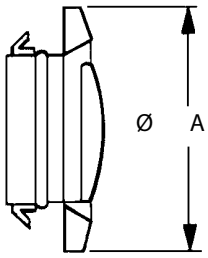

Model	A	D	E	Weight (lbs)
BOR/BOC-100	145	100	50	1
BOR/BOC-125	145	125	50	1
BOR/BOC-150	204	160	50	1
BOR/BOC-200	244	200	50	1

Additional general assembly accessories

BOR/BOC
Round plastic/metal adjustable grille

MBR
Connection Flanges

MFL
Filtering Box

PER-W
Plastic louver shutter

PER
High pressure aluminum louver shutter

GRA
Aluminum exterior fixed grilles

SR
Reducer

SY
Y sheet metal adapter

ID
Flexible round duct

SIL
Acoustic attenuators

Electrical accessories

EPBT
Electronic push button timer

SCS
Speed control slide type

SC
Speed control

TD-MIXVENT & TD-SILENT Practical Installations

The TD-MIXVENT & TD-SILENT system offers the most versatile installation range on the market, as a result of its multiple combinations; it can be used in a large number of small and mid-range ventilation installations.

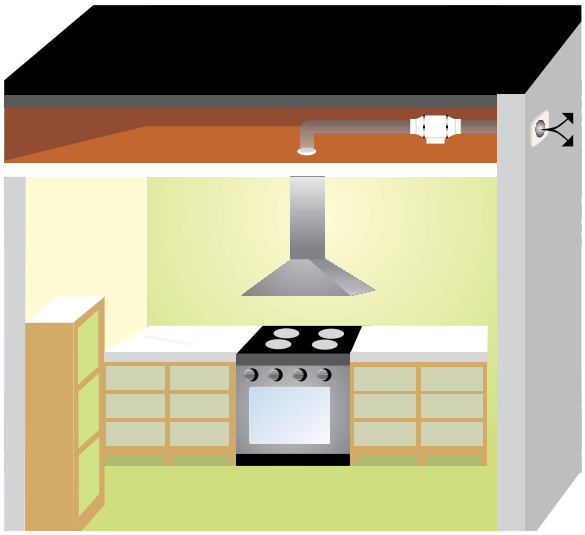

Domestic - Range Hood Exhaust

Commercial - Office

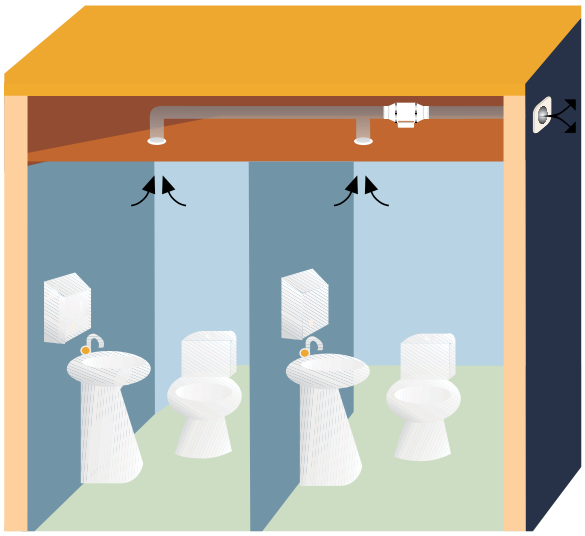

Industrial - Public Restroom

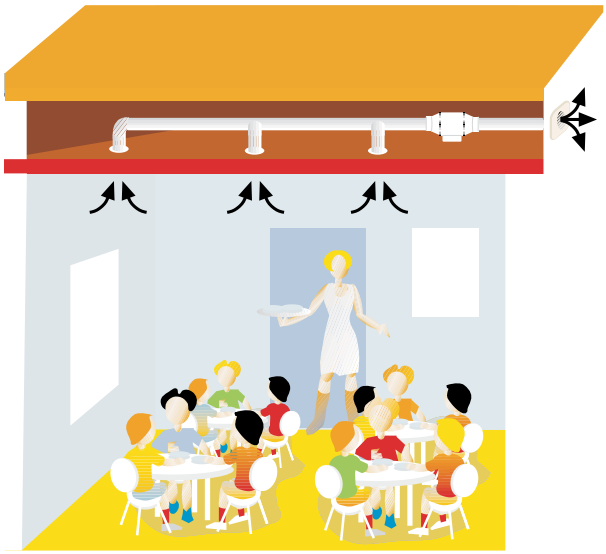

School - Dining Hall

Industrial - Locker Room

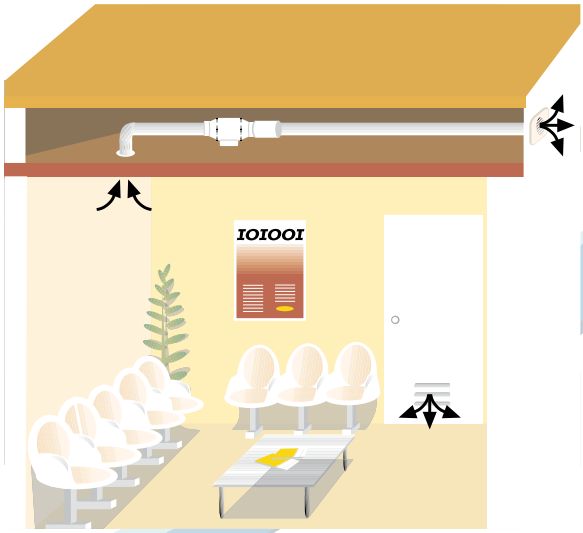

Health - Waiting Room

Also Available from S&P

PV-POWERVENT Fans

MODEL FEATURES

- Exhaust air up to 942 CFM with static pressure capabilities to 1.5” w.g.
- Galvanized steel casing with black backed enamel coating
- Pre-wired junction box
- Ideal for applications where space is limited
- Non-overloading backward inclined wheel for efficiency at higher static pressures
- AMCA Seal for Air Performance
- cULus Listed

Air Performance

Model No.	Nom. RPM	Volts	Max. Watts	CFM v Static Pressure (SP) Ins. WG									Max. SP	Duct Dia. Ins.
				0”	0.125”	0.25”	0.375”	0.5”	0.75”	1.0”	1.25”	1.5”		
PV-100	1400	115	57	108	100	92	85	78	66	52	33	18	1.70	4”
PV-100x	2880	115	84	153	142	130	120	111	96	80	63	34	1.85	4”
PV-125	2350	115	58	128	104	85	74	63	47	32	15	-	1.43	5”
PV-125x	2745	115	85	206	190	170	153	135	110	88	62	33	1.77	5”
PV-150	2750	115	78	245	205	177	157	129	93	59	-	-	1.20	6”
PV-150x	2700	115	130	390	367	340	312	285	233	193	153	110	2.05	6”
PV-200	3100	115	130	402	375	350	327	296	239	179	135	85	1.94	8”
PV-200x	2930	115	180	544	515	485	446	415	360	312	273	230	2.64	8”
PV-250	3000	115	170	568	533	502	471	440	370	312	263	221	2.61	10”
PV-250x	3045	115	214	618	595	570	540	510	450	390	340	297	2.80	10”
PV-315	2600	115	170	654	605	570	525	487	408	333	265	203	2.21	12.4”
PV-315x	2650	115	370	942	905	859	811	762	622	508	440	390	3.90	12.4”

Performance certified is for installation type D-Ducted inlet, Ducted outlet. Performance ratings do not include the effects of appurtenances (accessories). Speed (RPM or RPS) shown is nominal. Performance is based on actual speed of test.

S&P USA certifies that the PV range shown herein is licensed to bear the AMCA Seal. The ratings shown are based on tests and procedures performed in accordance with AMCA Publication 211 and comply with the requirements of the AMCA Certified Ratings Program.

*PV 150x and larger ENERGY STAR® qualified

SWF-SIDEWALL Fan

MODEL FEATURES

- Exhaust air up to 416 CFM with static pressure capabilities to 1.5” w.g.
- Galvanized steel casing with black backed enamel coating
- Pre-wired junction box
- Ideal for applications where space is limited
- Non-overloading backward inclined wheel for efficiency at higher static pressures
- cULus Listed

Air Performance

Model	RPM	Volts	Fre-quency	Current	Watts	CFM vs. Static Pressure (SP) Ins. WG								
						0”	0.125”	0.25”	0.375”	0.5”	0.75”	1.0”	1.25”	1.5”
SWF-100	2200	120	60 Hz	0.52 A	57	119	106	92	78	64	44	26	-	-
SWF-100X	2600	120	60 Hz	0.8 A	90	171	162	152	142	118	90	66	46	28
SWF-150	2600	120	60 Hz	0.8 A	90	235	221	197	181	168	122	81	60	27
SWF-150X	2800	120	60 Hz	1.0 A	115	354	332	310	287	266	230	192	147	96
SWF-200	2800	120	60 Hz	1.0 A	115	416	395	368	341	324	287	233	184	132

S&P USA Ventilation Systems, LLC

6393 Powers Avenue
Jacksonville, FL 32217
P. 904-731-4711
F. 904-737-8322
www.spvg-northamerica.com

Soler&Palau Ventilation Group

APPENDIX B

Air Controls Operation and Maintenance

APPENDIX B

Air Controls Operation and Maintenance

B-1 Vent Wells O&M

ARCADIS Design & Consultancy for natural and built assets

TRW Automotive U.S. LLC

OPERATION AND MAINTENANCE FOR VENT WELL SYSTEM

La Jolla Spring Cave Complex

1135 Highway W

Stanton, Missouri

August 1, 2018

OPERATION AND MAINTENANCE FOR VENT WELL SYSTEM

Prepared for:

TRW Automotive.

Royce Face, P.E.
Principal Design Engineer
Missouri Registered Engineer No. PE-2006029699

John Shonfelt, P.G.
Principal/Senior Project Manager

Prepared by:

Arcadis U.S., Inc.
Rosehill Office Park 1
8725 Rosehill
Suite 350
Lenexa
Kansas 66215
Tel 913 492 0900
Fax 913 492 0902

Our Ref.:

KC001590.0006

Date:

August 1, 2018

CONTENTS

1 Introduction 1
1.1 Background 1
1.2 Objective 1
2 Vent Well system Operations 1
2.1 System Objectives 1
2.2 System Components 1
2.2.1 Vent Wells 2
2.2.2 Inlet Manifold and Piping 2
2.2.3 Blower Package 2
2.2.4 Building 2
2.2.5 Electrical Service and Blower Controls 3
2.2.6 Blower Controls 3
2.2.7 Remote Monitoring 4
2.2.8 Alarm Conditions 4
2.2.9 Access Road 4
2.3 Operational Procedures and Troubleshooting 4
3 Routine Maintenance Activities and Procedures 4
3.1 Monthly O&M Activities 4
3.2 Semi-annual O&M Activities 5
3.3 Annual O&M Activities 5
3.4 As-needed O&M Activities 5

ATTACHMENTS

Attachment 1. Design Drawings
Attachment 2. Equipment Specification and Operation and Maintenance Manuals (on CD)
Attachment 3. Vent Well System Startup
Attachment 4. System Maintenance and Inspection Forms

1 INTRODUCTION

1.1 Background

This Operation and Maintenance (O&M) Manual details the operation and maintenance activities to be performed at the Vent Well System at Meramec Caverns, 1135 Hwy W (Site) in Stanton, MO.

This O&M Manual includes the following site-specific information necessary for operation of the System:

- Description of the System;
- System operation procedures;
- System O&M activities and frequency;
- System monitoring;
- Health and Safety (H&S) procedures for O&M activities; and
- Recording and recordkeeping procedures.

1.2 Objective

The objective of this O&M Manual is to provide a clear and easy-to-use guide for the operation and maintenance of the vent well system at the Site. This O&M Manual will be used by personnel performing the O&M activities in the field and provides the information needed to operate and maintain the system. The O&M Manual will be updated as needed to incorporate any changes to the system O&M procedures.

2 VENT WELL SYSTEM OPERATIONS

2.1 System Objectives

The vent well system is designed to extract sufficient air from the cavern to intercept up-cave air before reaching the developed portion of the cavern while simultaneously pulling air from the Amphitheater at a sufficient rate to flush the toured portion of Area 3 (cave behind the airlock doors) and maintain low TCE concentrations within cave air. The overall goal of the vent well system is to maintain flow from the Amphitheater to the vent wells at sufficient rates to prevent TCE concentrations from building up in the developed portion of the cave.

2.2 System Components

The vent well system consists of two 12-inch diameter steel cased vent wells, inlet manifold and piping, two redundant extraction blowers and discharge ductwork. Air is withdrawn from the cavern via the vent wells, ducted to the operating blower through the manifold, and discharged to the atmosphere. Access to the vent

well system is via a rock road with an entrance gate at the base of the road (in the Meramec Cavern maintenance yard) and fenced enclosure that encompasses the blower building, the vent wells and vent well piping.

2.2.1 Vent Wells

The vent wells are approximately 220 ft deep. The upper 200 ft of the vent wells are 12-inch diameter steel casing. Approximately, the lower 20 feet of the vent wells where they enter the cavern are completed open hole in the native limestone. The 12" casing extends approximately one foot above ground surface to allow for piping connections and prevent run off from entering the vent well and cavern should the wells be inoperative at any time.

2.2.2 Inlet Manifold and Piping

Piping between the vent wells and building consists primarily of a combination of 18" PVC pipe and fittings (one elbow at each vent well) and Fernco type flexible couplers where PVC is mated to 1) the vent wells and 2) the inlet manifold. The inlet manifold is manufactured of galvanized steel and acts to direct flow to whichever of the vent blowers is in operation. Sample ports are located in the piping to each of the vent wells to allow manual measurement of flow rate using a handheld anemometer.

Directing flow within the manifold is conducted by use of slide gates, one present at each blower and one on the manifold to separate flow from the two wells. The manifold was constructed to allow for a range of operating conditions including operating each blower on an individual well or either blower on both wells simultaneously

2.2.3 Blower Package

Two blowers were specified, primarily to provide for redundancy, allowing for continued operation should the primary blower require repairs. The second blower, designed to allow for extracting the design flow (7,500 cfm) from a single shaft, will serve as the backup blower. The 15 hp blower, designed to extract the design flow (7,300 cfm) from a combination of the two shafts will serve as the primary blower.

While flow is not directly measured, vacuum readings are continually monitored on each of the blowers to 1) provide a secondary indicator that the blower is operating, and 2) confirm that operating conditions haven't changed (i.e. performance deterioration, blockage of inlet piping, blockage of discharge piping, etc.).

Slide gates connect each of the blowers to the manifold. The slide gates are opened manually when the blower is placed in operation and closed manually when taken out of operation.

Each of the blowers discharges through dedicated ductwork. The ductwork discharges above the roof line of the enclosure and is screened to prevent entrance by animals or debris.

2.2.4 Building

The blowers are mounted inside of a small building. The building is constructed on a steel skid with hardboard siding, trim, and a corrugated steel roof.

2.2.5 Electrical Service and Blower Controls

The vent well system has dedicated electrical service that is buried underground between the cavern parking lot area and the building to minimize long term service interruptions that are more likely to occur with aboveground service lines. Electrical service lines were installed by boring up the side of the hill from the cavern parking lot to the top of the hill, which was completed April 25th, 2016. Final electrical service connections to the Vent Well System were made June 16, 2016 after the line was buried in trenches from the site of tunneling to the vent well system location and required installation of junction boxes along with the meter for the site. Power is provided to the building via buried conduit to the service entrance on the east side of the building.

The motor control center and control panel for operation of the blowers are located inside the building. A schematic of the system logic is presented in Attachment 1. The system is designed to run continuously without an operator although periodic inspections will be conducted. Critical conditions will be sensed with instruments, and controls, and when alarms occur, contact will be made with both operators and MCE staff via an e-mail message. Routine operating status reports are also automatically prepared and sent to the Arcadis team.

In addition to the permanent electrical service, the vent well system includes a 50 kW standby generator sized to operate the 15 hp blower. The generator is configured to operate under the following conditions:

- Standby under normal utility power
- Manually switch to generator power
- Automatic transfer to exercise with load (system will run off generator weekly)
- Automatic transfer to generator power during power outage
- Automatic transfer from generator power to utility power upon restoration of utility power

Additional operation data including fuel level will be communicated to the programmable logic controller (PLC) and will be accessible for remote monitoring. The backup generator was installed and operational February 2017.

Maintenance for the generator will be covered under an annual maintenance contract, which will include changing engine oil and filters along with other routine maintenance needs at regularly scheduled intervals. In addition, on-call services for any generator repairs will go through the same maintenance contractor.

2.2.6 Blower Controls

Operation of each of the blowers is controlled using a variable frequency drive (VFD) that allows control of the blower speed, and thus control of the flow rate. Blowers are operated through hand-off-auto (HOA) controls in the PLC touch pad. When operating by hand, the speed of the blower can be controlled via the VFD, but routine critical conditions do not function. Routine operation of the blower will be in the HOA condition.

2.2.7 Remote Monitoring

Remote monitoring is achieved through a cellular modem connected to the PLC that transmits system parameters. Access to the system can be gained through a password protected internet site, maintained by Arcadis. An uninterruptible power supply (UPS) is used as battery backup to send out alarms during power outages before the generator returns power to the system.

2.2.8 Alarm Conditions

The alarms generated by the PLC monitoring fall into two categories:

- Hard (cascading) alarm – the system will shut down and remain shut down until restarted by remote or on-site personnel.
- Soft (notification) alarms – the system will continue to operate; the alarm provides notification of changed conditions.

2.2.9 Access Road

The access road is a rock road connecting the maintenance yard at the base of the hill to the blower system and vent wells located above the cavern on top of the hill.

2.3 Operational Procedures and Troubleshooting

For troubleshooting or replacing individual system components, refer to the equipment specification sheets and operating and maintenance manuals provided in Attachment 2. System startup details are included in Attachment 3.

3 ROUTINE MAINTENANCE ACTIVITIES AND PROCEDURES

This section provides the maintenance and inspection procedures for the System. Procedures are presented for the following inspection events:

- Monthly (every 800 hours),
- Semi-annually (every 4,000 hours),
- Annually (every 8,000 hours), and
- As needed.

The procedures include general system maintenance and specific inspection and maintenance procedures for each of the major system components. All system inspections should be properly documented in a field notebook or on the System Maintenance and Inspection Form included in Attachment 4.

3.1 Monthly O&M Activities

The general system O&M activities that should be performed monthly include:

- Check for air leaks.
- Check for alarms.
- Check and record pressures.

The specific O&M activities that should be performed on the major system components monthly include:

- Check for leaks at the vent well connections.
- Measure airflow through each vent well. Compare to expected airflow at given blower speed.
- Check the discharge stacks of the treatment building for any debris that may obstruct flow.
- Inspect the access road to the treatment system building to confirm accessibility.

3.2 Semi-annual O&M Activities

The following activities should be completed semi-annually:

- Pressure Gauges – Check the accuracy of the gauges using a digital manometer and zero or replace the gauges if necessary.
- Test Alarms – Simulate power outage using the disconnect to verify the appropriate A/C power loss alarm is called out. Press the drive enable button to disable the drive. Verify the drive enable alarm is called out.

3.3 Annual O&M Activities

The following O&M activities should be completed on a yearly basis:

- Photo documentation of the above ground connections to the vent wells.
- Photo documentation of piping and manifold conditions.
- Photo documentation of building condition.

3.4 As-needed O&M Activities

The following O&M activities will be completed on an as-needed basis:

- Periodic general maintenance including additional rock and repairs of washouts after heavy storms and/or removal of downed trees will be required to maintain all weather access. In addition to routine access using a light pickup or SUV, periodic access for fuel or repair trucks will be required. Road conditions should be maintained to allow access by these larger vehicles.
- Periodic painting of the vent well system building will be conducted on an as-needed basis.

ATTACHMENT 1

Design Drawings

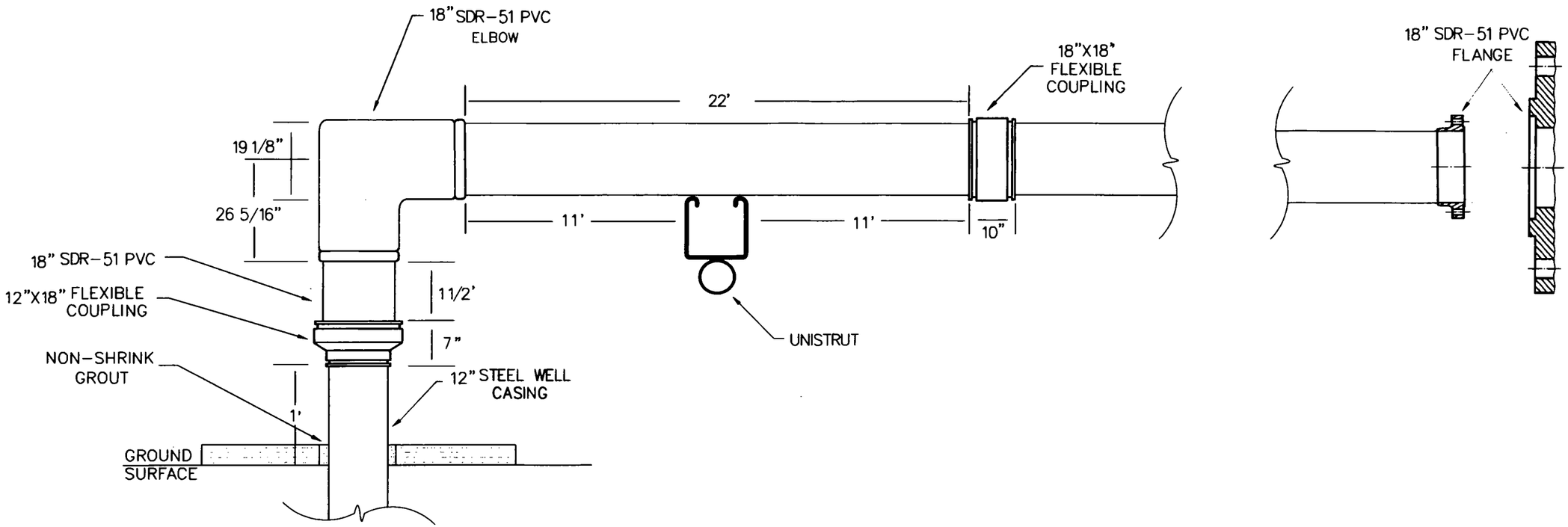

VACUUM EXTRACTION CONNECTION DETAIL

NOT TO SCALE

XREFS: IMAGES: PROJECTNAME: —

SCALE(S) AS INDICATED

THIS BAR REPRESENTS ONE INCH ON THE ORIGINAL DRAWING: USE TO VERIFY FIGURE REPRODUCTION SCALE

No.	Date	Revisions	By	Ckd

THIS DRAWING IS THE PROPERTY OF THE ARCADIS ENTITY IDENTIFIED IN THE TITLE BLOCK AND MAY NOT BE REUSED OR ALTERED IN WHOLE OR IN PART WITHOUT THE EXPRESS WRITTEN PERMISSION OF SAME.

Professional Engineer's Name

Professional Engineer's No.

State | Date Signed | Project Mgr.

Designed by | Drawn by | Checked by

ARCADIS

ARCADIS U.S., INC.

LA JOLLA SPRING CAVE COMPLEX ■ STANTON, FRANKLIN COUNTY MISSOURI

DESIGN

WELL CONNECTION DETAIL

ARCADIS Project No.
KC001580.0005.00002

Date
APRIL 21, 2016

ARCADIS
8725 ROSEHILL RD
SUITE 350
LENEXA, KANSAS
TEL. 913.492.0900

1

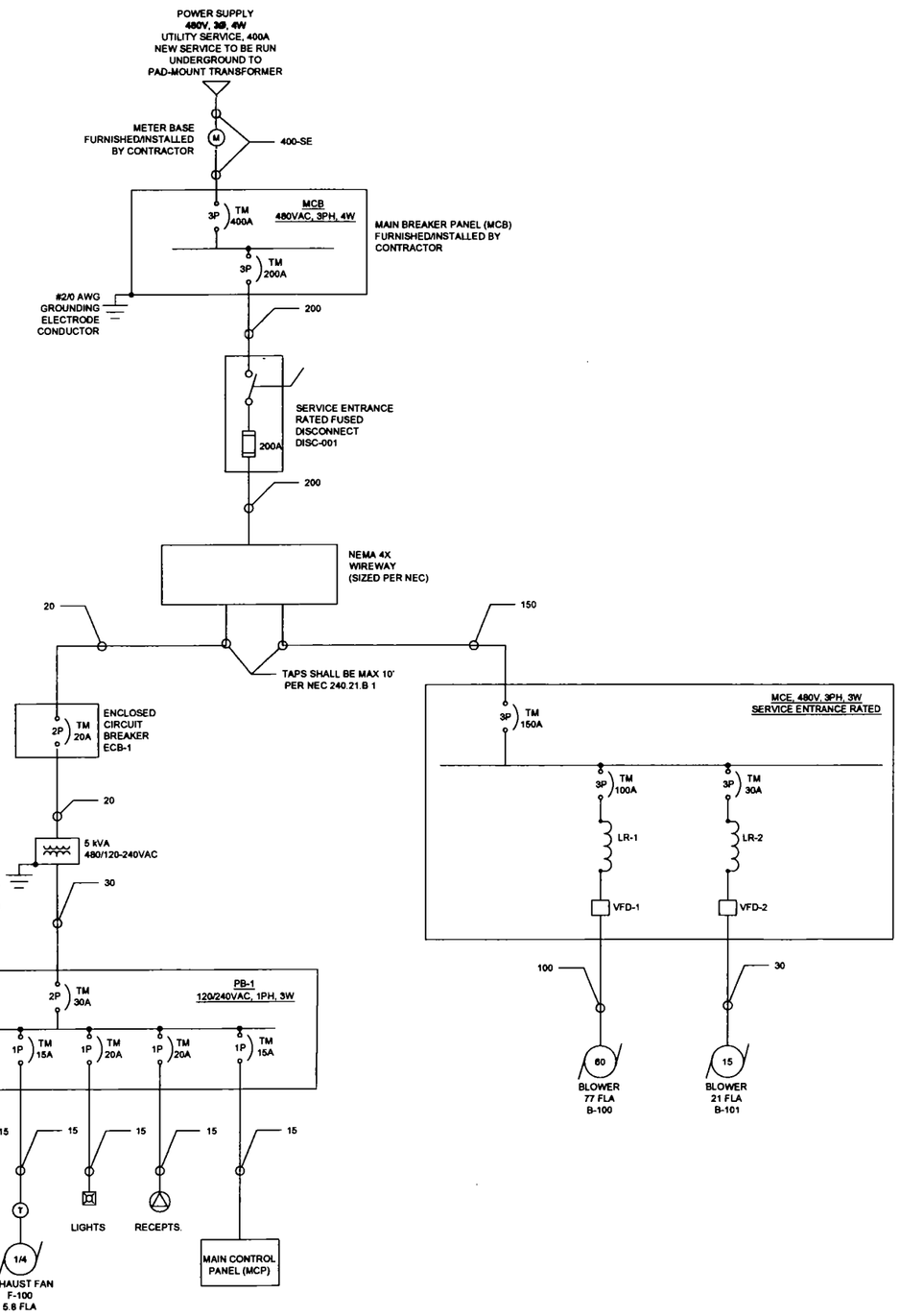

DISC-001									
DEVICE	VOLTAGE	PHASE	HP	DUTY FACTOR	BREAKER SIZE (AMPS)	CONNECT LOAD - 480V (AMPS)**	DEMAND LOAD - 480V (AMPS)**	kVA	
MCE	480	3	60.00	100.0%	150	98.00	98.00	81.46	
ECB-1	480	3	15.00	100.0%	50	5.17	5.17	4.30	
					SUBTOTALS :	103	103	85.77	
						TOTAL ELECTRICAL LOAD:		103.17	CONNECTED AMPS
**VALUES TAKEN FROM 2014 NEC								103.17	DEMAND AMPS
MAIN BREAKER INFORMATION								129	MINIMUM BREAKER SIZE
								200	MAIN BREAKER

MCE									
DEVICE	VOLTAGE	PHASE	HP	DUTY FACTOR	BREAKER SIZE (AMPS)	CONNECT LOAD - 480V (AMPS)**	DEMAND LOAD - 480V (AMPS)**	kVA	
B-100	480	3	60.00	100.0%	100	77.00	77.00	64.02	
B-101	480	3	15.00	100.0%	30	21.00	21.00	17.46	
					SUBTOTALS :	98	98	81.46	
					TOTAL ELECTRICAL LOAD:			98.00	CONNECTED AMPS
**VALUES TAKEN FROM 2014 NEC								98.00	DEMAND AMPS
MAIN BREAKER INFORMATION								123	MINIMUM BREAKER SIZE
								150	MAIN BREAKER

PB-1								
DEVICE	VOLTAGE	PHASE	HP	DUTY FACTOR	BREAKER SIZE (AMPS)	CONNECTED LOAD - 120V (AMPS)**	kVA	
EXHAUST FAN	120	1	0.25	100.0%	5	5.80	0.70	
LIGHTS	120	1		100.0%	15	5.00	0.60	
OUTDOOR LIGHTS	120	1		100.0%	15	5.00	0.60	
RECEPTS.	120	1		100.0%	15	10.00	1.20	
MCP	120	1		100.0%	15	10.00	1.20	
					SUBTOTALS :	35.80	4.30	
							17.90	CONNECTED AMPS
**VALUES TAKEN FROM 2014 NEC							17.90	DEMAND AMPS
MAIN BREAKER INFORMATION							22	MINIMUM BREAKER SIZE
							30	MAIN BREAKER

ELECTRICAL SYMBOL LEGEND

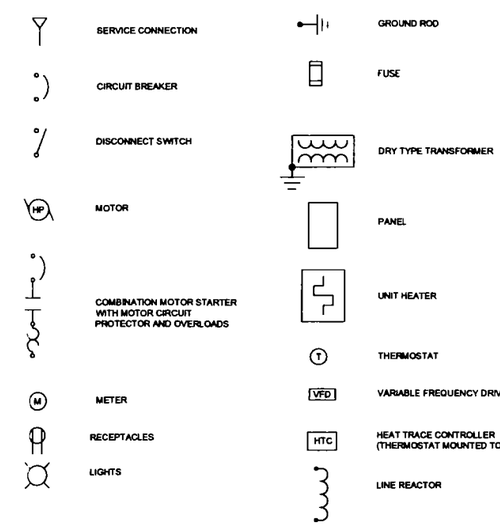

CONDUIT SCHEDULE					
SYMBOL	WIRE QUANTITY	TYPE AWG	SIZE	GROUND	CONDUIT
15	2	XHHW	# 12	(1) # 12	3/4"
20	2	XHHW	# 10	(1) # 10	3/4"
30	2	XHHW	# 10	(1) # 10	3/4"
100	3	XHHW	# 1	(1) # 8	2"
150	3	XHHW	# 2/0	(1) # 6	2"
200	3	XHHW	# 3/0	(1) # 6	2"
400-SE	4	RHW-USE	#600 KCM	-	4"

ARCADIS

LEGAL ENTITY:
ARCADIS U.S., Inc.
ARCHITECTURAL AND
ENGINEERING SERVICES, INC.

COPYRIGHT: 2015

CONSULTANTS

NO.	DATE	ISSUED FOR	BY
0		ISSUE FOR BID	

SEALS

NOT FOR CONSTRUCTION

DATE: APRIL 2016
PROJECT NO.: CA000770.0017.00001
FILE NAME: STANTON SINGLE LINE
DESIGNED BY:
DRAWN BY:
CHECKED BY:

1135 ROUTE W. STANTON, MO

TRW

TRW CAVERN VAPOR EXTRACTION SYSTEM

ARCADIS PROJ. NO. CA000770.0017.00001

SHEET TITLE

SINGLE LINE DIAGRAM

SCALE: NTS

E-01

SHEET X OF XX

User:NTHOMAS Spec:PRIME STANDARD File:G:\EIC_DW\OPROJECTS\TRW STANTON\CAD\SINGLE LINE\STANTON SINGLE LINE.DWG Scale:1:1 SavedDate:4/27/2016 Time:11:43 Plot Date: Thomas, Nick; 4/27/2016; 11:43 ; LayoutE-01

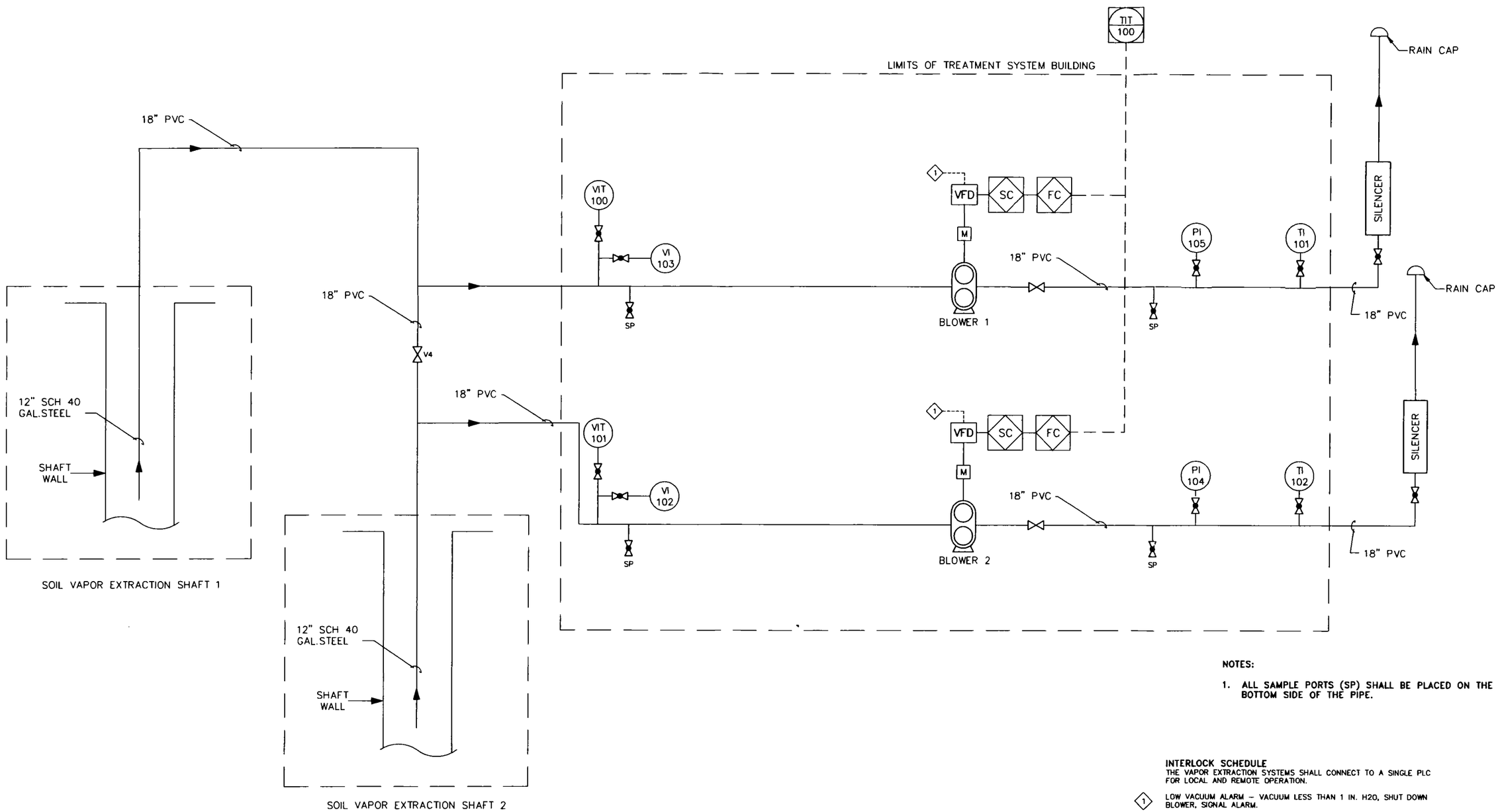

NOTES:

1. ALL SAMPLE PORTS (SP) SHALL BE PLACED ON THE BOTTOM SIDE OF THE PIPE.

INTERLOCK SCHEDULE

THE VAPOR EXTRACTION SYSTEMS SHALL CONNECT TO A SINGLE PLC FOR LOCAL AND REMOTE OPERATION.

1 LOW VACUUM ALARM – VACUUM LESS THAN 1 IN. H2O, SHUT DOWN BLOWER, SIGNAL ALARM.

CITY: DIV/GROUP: DB: LD: PIC: PM: TM: LYR:ON=*;OFF=*REF*
G:\EIC_DWG\PROJECTS\TRW Stanton\CAD\PID\Stanton SVE_2.dwg LAYOUT: PID-1 SAVED: 4/20/2016 10:40 AM ACADVER: 19.1S (LMS TECH) PAGESETUP: — PLOTSTYLETABLE: — PLOTTED: 4/20/2016 10:41 AM BY: VANDE BOOM, JILL
XREFS: Border IMAGES: PROJECTNAME: —

SCALE(S) AS INDICATED

THIS BAR REPRESENTS ONE INCH ON THE ORIGINAL DRAWING: USE TO VERIFY FIGURE REPRODUCTION SCALE

No.	Date	Revisions	By	Ckd
1	04/2016	ISSUE FOR BID	NT	

THIS DRAWING IS THE PROPERTY OF THE ARCADIS ENTITY IDENTIFIED IN THE TITLE BLOCK AND MAY NOT BE REUSED OR ALTERED IN WHOLE OR IN PART WITHOUT THE EXPRESS WRITTEN PERMISSION OF SAME.

Professional Engineer's Name
PE NAME
Professional Engineer's No.
##

State	Date Signed	Project Mgr.
WI		(MGR)
Designed by	Drawn by	Checked by
MS	NT	INIT.

NOT FOR CONSTRUCTION

ARCADIS Design & Consultancy for natural and built assets

ARCADIS U.S., INC.

TRW • 1135 ROUTE W, STANTON, MO
TRW SYSTEM FABRICATION ISSUE FOR BID

PIPING AND INSTRUMENTATION DIAGRAM

ELECTRICAL

ARCADIS Project No. KC001590.0006.008F3

Date 04/2016

ARCADIS
126 N JEFFERSON ST
SUITE 400
MILWAUKEE, WISCONSIN
TEL. 414.276.7742

PID-1

REVISIONS			
Rev	Date	By	Description
0			
1			
2			
3			
4			

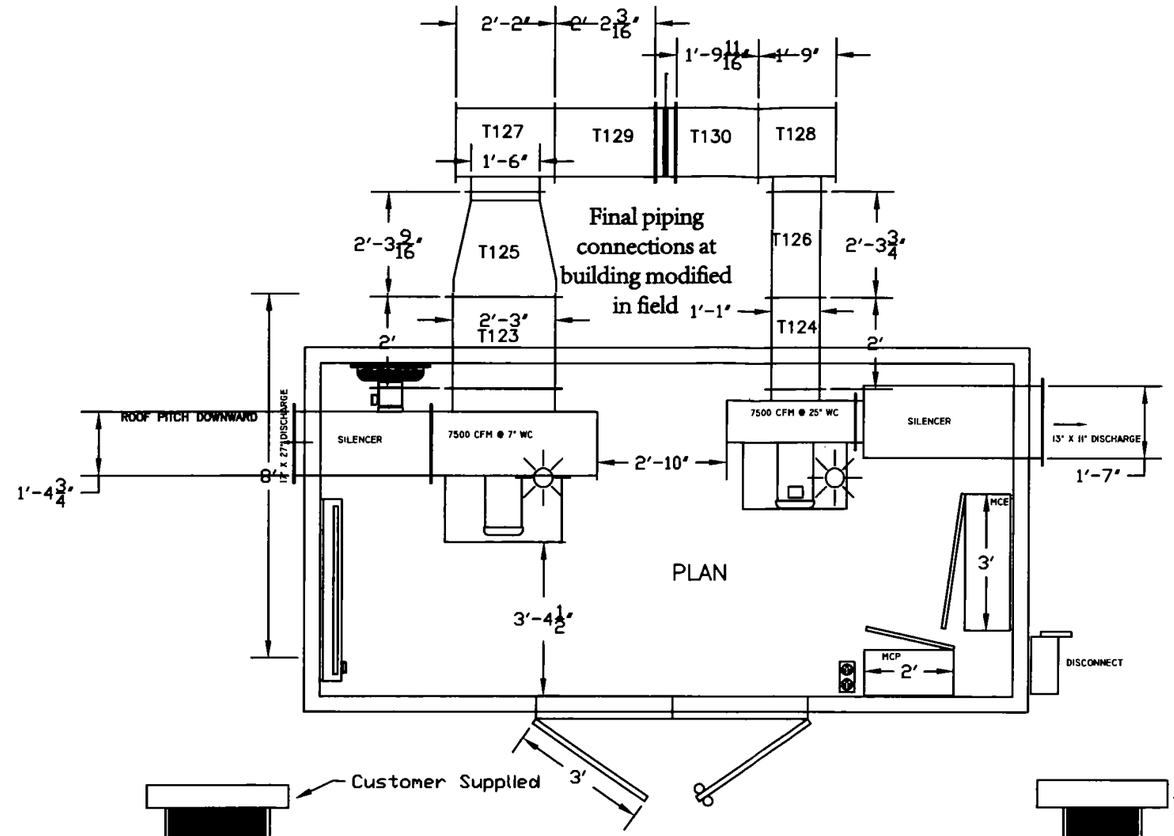

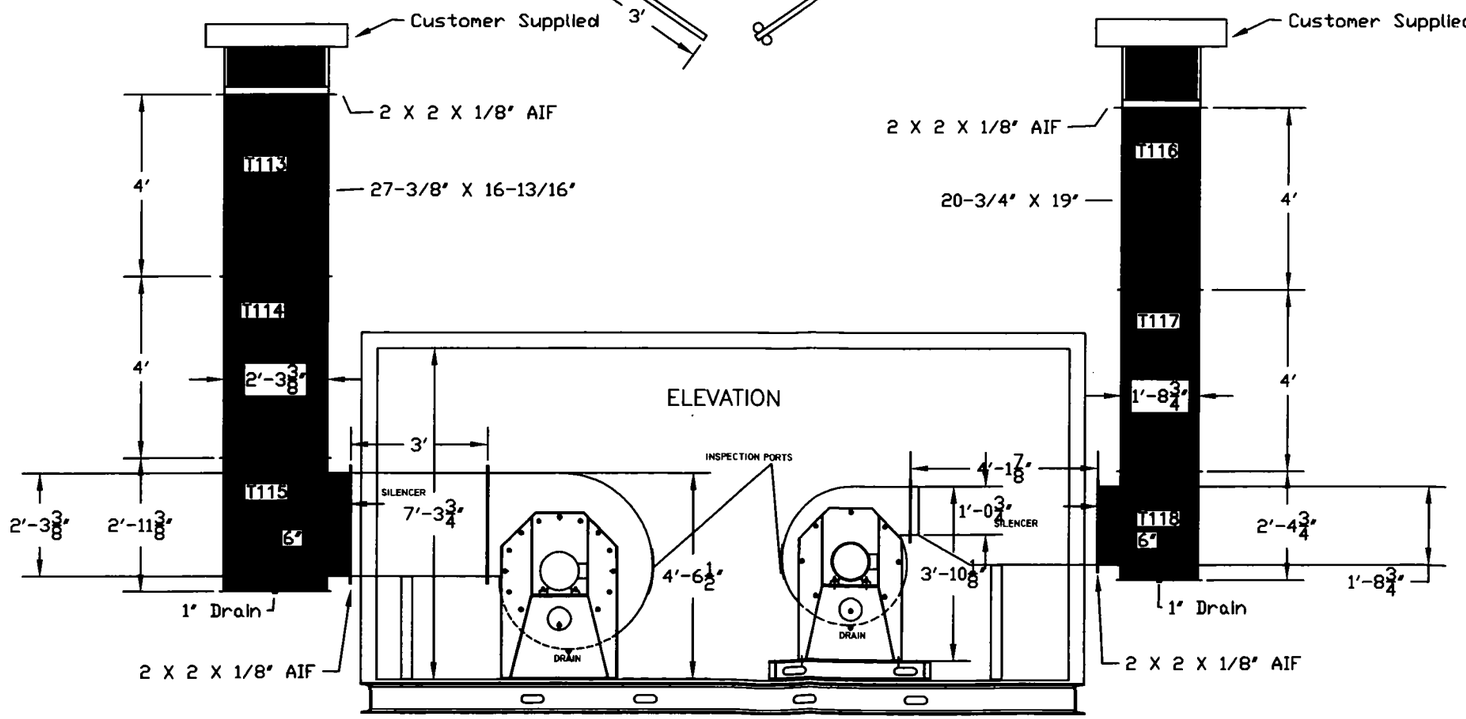

PRODUCT LEVEL CONTROL, INC.
ENVIRONMENTAL EQUIPMENT & CONTROLS
11929 Portland Ave S.
Burnsville, MN 55377
Phone: 952-707-9101
Fax: 952-707-1075

Customer	Arcadis
Site Reference	TRW Cave System
Cust. No.	PLC Job No.
Tolerance	±6"
Rev.	0
Drawing No.	Plan
Sheet No.	Sheet 1 of 1
Scale	1:36
Drawn By	BGG
Drawn Date	4-19-2016
Title	Enclosure Plan

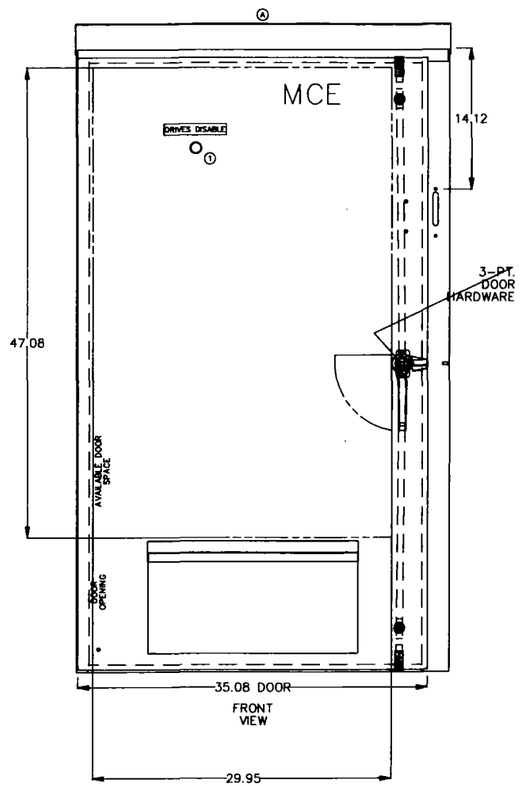

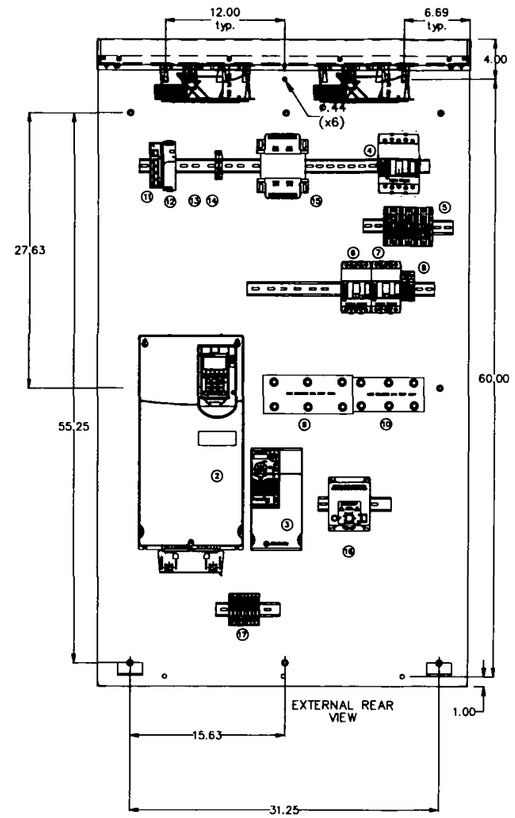

TAG	QTY	DESCRIPTION	MANUFACTURER	CATALOG #
A	1	65HX37WX16D TYPE 3R VENTED	SCE	SCE-65XVR3716
A	1	SUBPLATE	SCE	SCE-60P36
A	1	MOUNTING KIT , VENTED 3R	SCE	SCE-VRMS36
1	1	PUSH-PULL ILL 12-120V LED BLUE	AB	800T-FXMQH2BA7
2	1	POWERFLEX 753 480V 60HP 96A	AB	20F11ND096AA0NNNNN
3	1	POWERFLEX 525 15HP 480VAC	AB	25B-D024N104
4	1	I FRAME, 3 POLE 150A	AB	140G-I2C3-D15
5	1	POWER DIST BLOCK 335A 1 IN 6 OUT	AB	1492-PD3163
6	1	UL489, BREAKER,25KA, 100A	AB	140G-G2C3-D10
7	1	MOLDED CASE BREAKER, 3 POLE 30A	AB	140G-G2C3-C30
8	1	3 AMP 2 POLE BREAKER	AB	1489-M2C030
9	1	LINE/LOAD REACTOR 24A 15HP 480V	AB	1321-3R25-B
10	1	LINE/LOAD REACTOR 80A 60HP 480V	AB	1321-3R80-B
11	1	STRATIX 2000, 5 PORT, UNMAN.	AB	1783-US5T
12	1	POWER SUPPLY 24VDC 80WATTS	AB	1606-XLE80E
13	1	4PDT RELAY 24VDC,7A	AB	700-HC14Z24
14	1	CIRCUIT BREAKER 10AMP	AB	1492-SPM1C100
15	1	XFRMR, 750VA, 240/480-120/240	AB	PH750MQMJ
16	1	200 W HEATER	SCE	SCE-HF2001A
17	TBD	TERMINAL BLOCKS	AB	AB

ARCADIS

LEGAL ENTITY:
ARCADIS U.S., Inc.
ARCHITECTURAL AND
ENGINEERING SERVICES, INC.

COPYRIGHT: 2016

CONSULTANTS

NO.	DATE	ISSUED FOR	BY
2	10/2016	AS BUILT - UPDATED FOR GENERATOR	
1	05/2016	AS BUILT	

SEALS

DATE: MARCH 2016
PROJECT NO.:
FILE NAME: TRW_CP_AS-BUILT
DESIGNED BY:
DRAWN BY:
CHECKED BY:

ADDRESS
TRW
STANTON, MO

ARCADIS PROJ. NO. ###

SHEET TITLE
REMEDIAL SYSTEM MCE PANEL LAOUT

SCALE:
MCE

User:RTHOMAS Spec:PRIME STANDARD File:O:\EIC_DW\OPROJECT\TRW\STANTON\CAD\PANEL DRAWING\BAB BUILT\TRW_CP_AS-BUILT.DWG Scale:1:1 SaveDate:10/20/2016 Time:17:29 Plot Date: Thomas, Mich. 10/20/2016, 17:34 - Layout:MCE

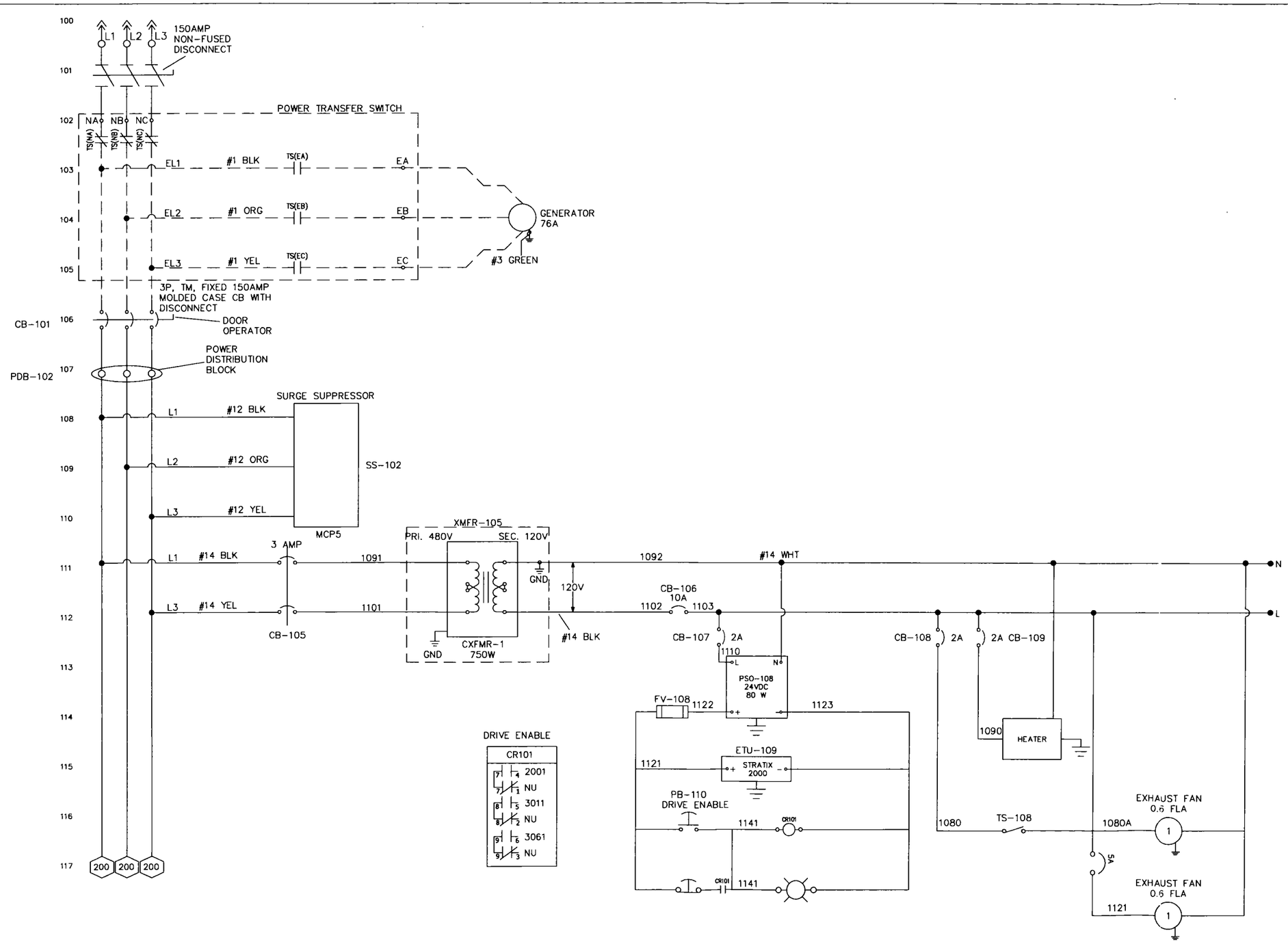

ARCADIS

LEGAL ENTITY:
ARCADIS U.S., Inc.
ARCHITECTURAL AND
ENGINEERING SERVICES, INC.

COPYRIGHT: 2015

CONSULTANTS

NO.	DATE	ISSUED FOR	BY
2	10/2016	AS BUILT - UPDATED FOR GENERATOR	
1	05/2016	AS BUILT	

SEALS

DATE: MARCH 2016
PROJECT NO.:
FILE NAME: TRW_CP_AS-BUILT
DESIGNED BY:
DRAWN BY:
CHECKED BY:

ADDRESS
TRW
STANTON, MO

ARCADIS PROJ. NO. ###

SHEET TITLE
REMEDIAL SYSTEM MCE
WIRING

SCALE:
MCE-1

User:NTHOMAS Spec:PRIME STANDARD File:G:\EIC_DWG\PROJECT\BTRW\STANTON\CAD\PANEL DRAWINGS\AS BUILT\BTRW_CP_AS-BUIL1.DWG Scale:1:1 SavedDate:10/24/2016 Time:10:05 Plot Date: Thomas, Nick, 10/24/2016, 10:05 , Layout:MCE-1

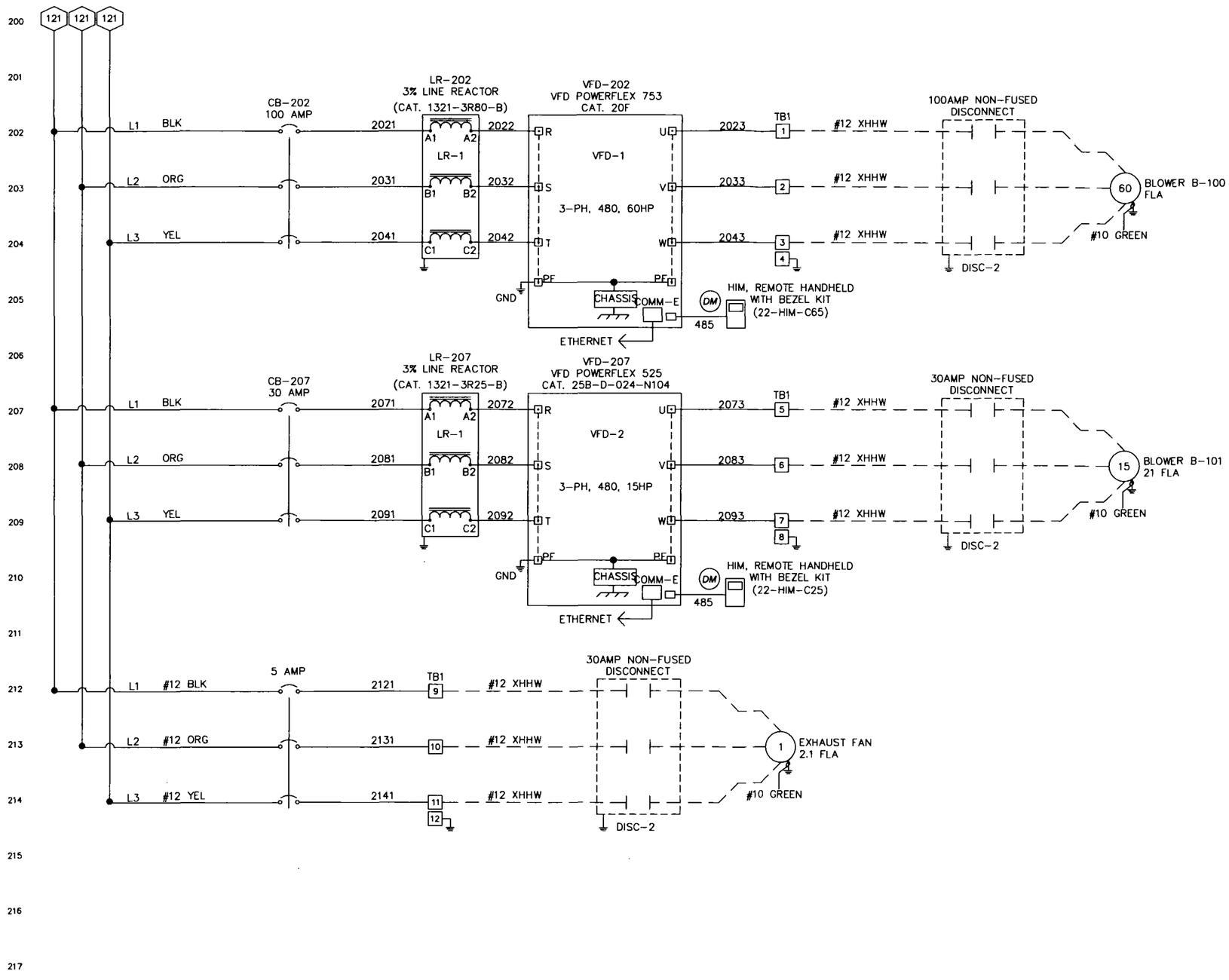

ARCADIS

LEGAL ENTITY:
ARCADIS U.S., Inc.
ARCHITECTURAL AND
ENGINEERING SERVICES, INC.

COPYRIGHT: 2015

CONSULTANTS

NO.	DATE	ISSUED FOR	BY
2	10/2016	AS BUILT - UPDATED FOR GENERATOR	
1	05/2016	AS BUILT	

SEALS

DATE: MARCH 2016
PROJECT NO.:
FILE NAME: TRW_CP_AS-BUILT
DESIGNED BY:
DRAWN BY:
CHECKED BY:

ADDRESS
TRW
STANTON, MO

ARCADIS PROJ. NO. ###

SHEET TITLE
REMEDIAL SYSTEM MCE
WIRING

SCALE:
MCE-2

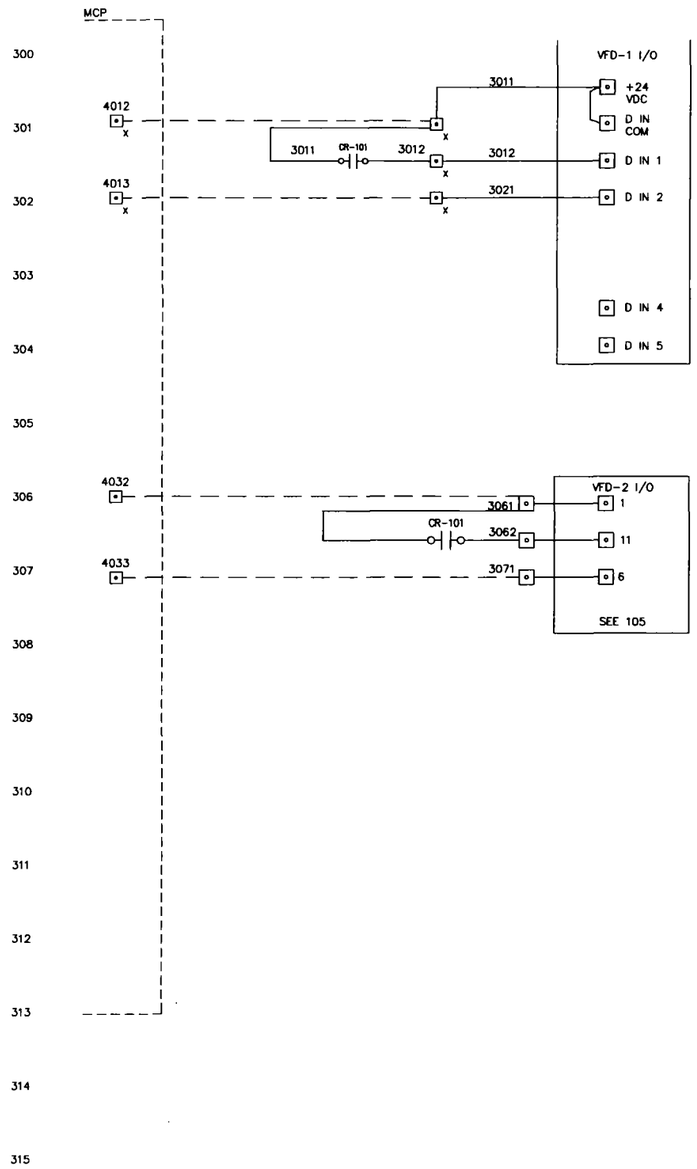

PARAMETER #	VALUE
174	P12
TBD	TBD
545	PORT 2
550	PORT 4
563	PORT 4

PARAMETER #	VALUE
P 046	5
P 047	15
P 048	3
P 049	3
P 066	5

User:NTHOMAS Spec:PRINE STANDARD File:G:\EIC_DWG\PROJECTS\TRW\STANTON\CAD\PANEL DRAWINGS\AS BUILT\STRW_CP_AS-BUILT.DWG Scale:1:1 Saved Date:10/20/2016 Time:17:29 Plot Date: Thomas, Nick: 10/20/2016, 17:35, Layout:MCE-3

ARCADIS

LEGAL ENTITY:
ARCADIS U.S., Inc.
ARCHITECTURAL AND
ENGINEERING SERVICES, INC.

COPYRIGHT: 2015

CONSULTANTS

NO.	DATE	ISSUED FOR	BY
2	10/2016	AS BUILT - UPDATED FOR GENERATOR	
1	05/2016	AS BUILT	

SEALS

DATE: MARCH 2016
PROJECT NO.:
FILE NAME: TRW_CP_AS-BUILT
DESIGNED BY:
DRAWN BY:
CHECKED BY:

ADDRESS
TRW
STANTON, MO

ARCADIS PROJ. NO. ###

SHEET TITLE
REMEDIAL SYSTEM MCE WIRING

SCALE:
MCE-3

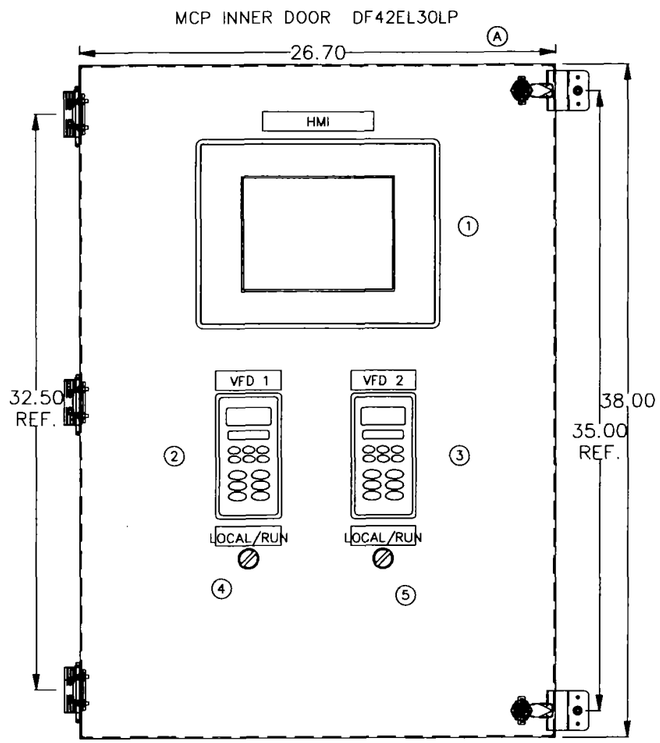

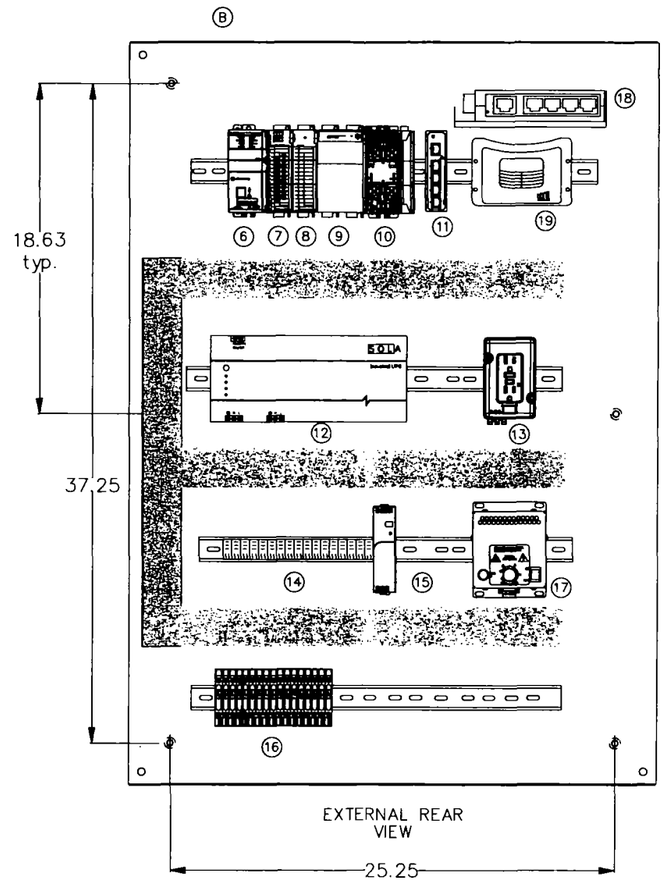

TAG	QTY	DESCRIPTION	MANUFACTURER	CATALOG #
A	1	42HX30W DEADFRONT INNER DOOR	SCE	SCE-DF42EL30LP
B	1	42HX30WX12D TYPE 4 PAINTED WHITE	SCE	SCE-42EL3012LP-WHITE
1	1	10" TOUCH, COLOR ETH/USB 24VDC	C-MORE	EA9-T10CL
2	1	VFD HMI	AB	20-HIM-C6S
3	1	VFD HMI	AB	22-HIM-C2S
4,5	2	2 POSITION SW W/N.O.	AB	800FP-SM22PX10
6	1	PLC	AB	1769-L33R
7	1	16 PT INPUT SINK/SOURCE	AB	1769-IQ16
8	1	MICRO 1500 8 PT AI	AB	1769-IF8
9	1	POWER SUPPLY	AB	1769-PA2
10	1	16 PT OUTPUT	AB	1769-OW16
11	1	STRATIX 2000, 5 PORT, UNMAN.	AB	1783-US5T
12	1	UPS 650VA	SOLA	S1K650
13	1	15A DIN RECPT	AB	492-REC15
14	17	1P 16A 120VAC RELAY	AB	700-HK36A1
15	1	120W POWER SUPPLY 120/24	AB	1606-XLE120E
16	TBD	TERMINAL BLOCKS	AB	AB
17	1	200 W HEATER	SCE	SCE-HF2001A
18	1	RADIO	SIERRA	GX-450
19	1	ASA SWITCH	CISCO	ASA-505

ARCADIS

LEGAL ENTITY:
ARCADIS U.S., Inc.
ARCHITECTURAL AND
ENGINEERING SERVICES, INC.

COPYRIGHT: 2015

CONSULTANTS

NO.	DATE	ISSUED FOR	BY
2	10/2016	AS BUILT - UPDATED FOR GENERATOR	
1	05/2016	AS BUILT	

SEALS

DATE: MARCH 2016
PROJECT NO.:
FILE NAME: TRW_CP_AS-BUILT
DESIGNED BY:
DRAWN BY:
CHECKED BY:

ADDRESS
TRW
STANTON, MO

ARCADIS PROJ. NO. ###

SHEET TITLE
REMEDIAL SYSTEM MCP
PANEL LAOUT

SCALE:
MCP

User:KTHOMAS Spec:PIRNIE STANDARD File:Q:\EIC_DWG\PROJECTS\TRW\STANTON\CAD\PANEL DRAWING\BAS BUILT\TRW_CP_AS-BUILT.DWG Scale:1:1 SavedDate:10/20/2016 Time:17:29 Plot Date: Thomas, Nick, 10/20/2016, 17:35 , Layout:MCP

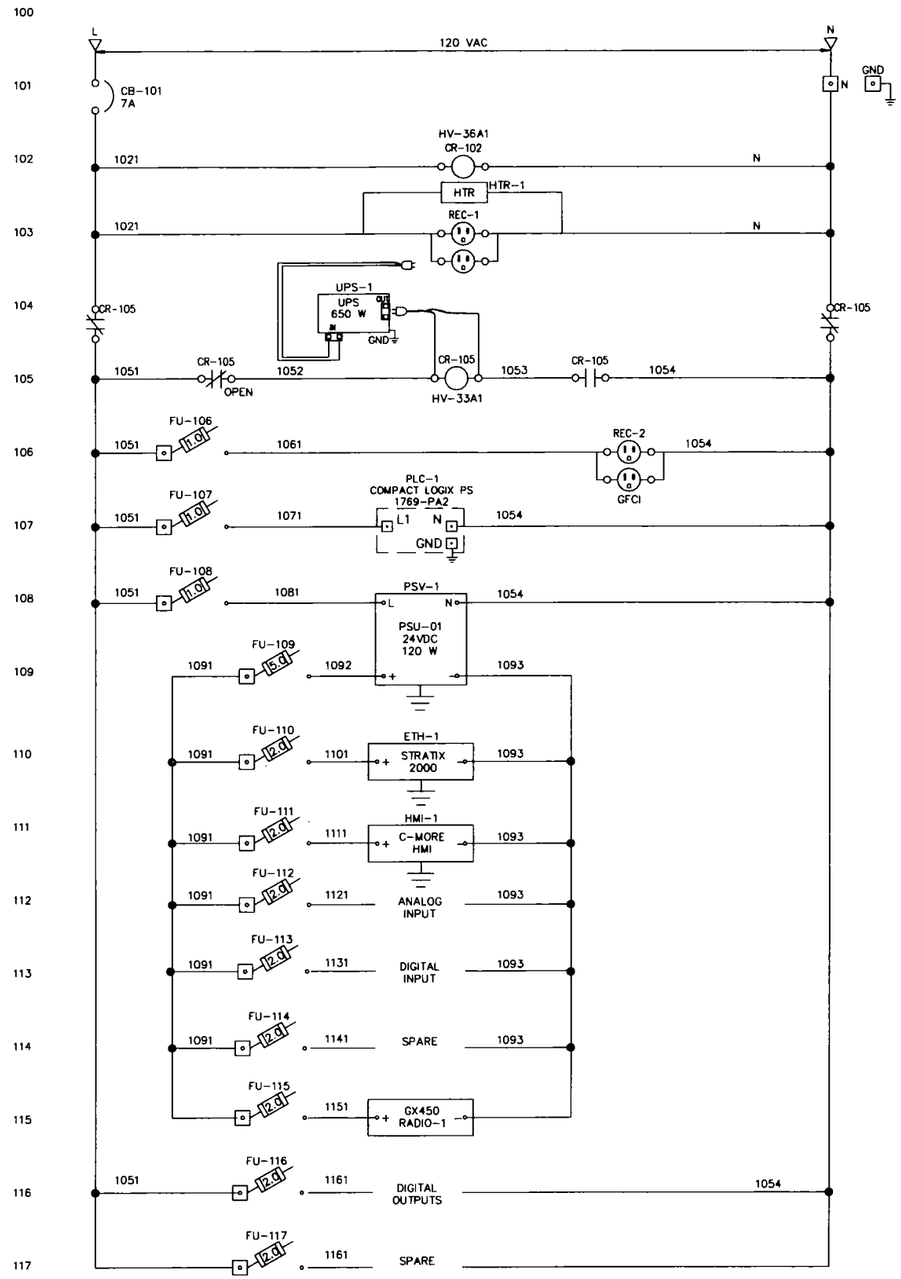

ARCADIS

LEGAL ENTITY:
ARCADIS U.S., Inc.
ARCHITECTURAL AND
ENGINEERING SERVICES, INC.

COPYRIGHT: 2015

CONSULTANTS

NO.	DATE	ISSUED FOR	BY
2	10/2016	AS BUILT - UPDATED FOR GENERATOR	
1	05/2016	AS BUILT	

SEALS

DATE: MARCH 2016
PROJECT NO.:
FILE NAME: TRW_CP_AS-BUILT
DESIGNED BY:
DRAWN BY:
CHECKED BY:

ADDRESS
TRW
STANTON, MO

ARCADIS PROJ. NO. ###

SHEET TITLE
REMEDIAL SYSTEM POWER DISTRIBUTION

SCALE
MCP-1

User:NTHOMAS Spec:PRIME STANDARD File:G:\EIC_DWG\PROJECTS\TRW\STANTON\CAD\PANEL DRAWING\AS BUILT\TRW_CP_AS-BUILT.DWG Scale:1:1 SavedDate:10/20/2016 Time:17:20 Plot Date: Thomas, Nick; 10/20/2016; 17:35 ; Layout:MCP-1

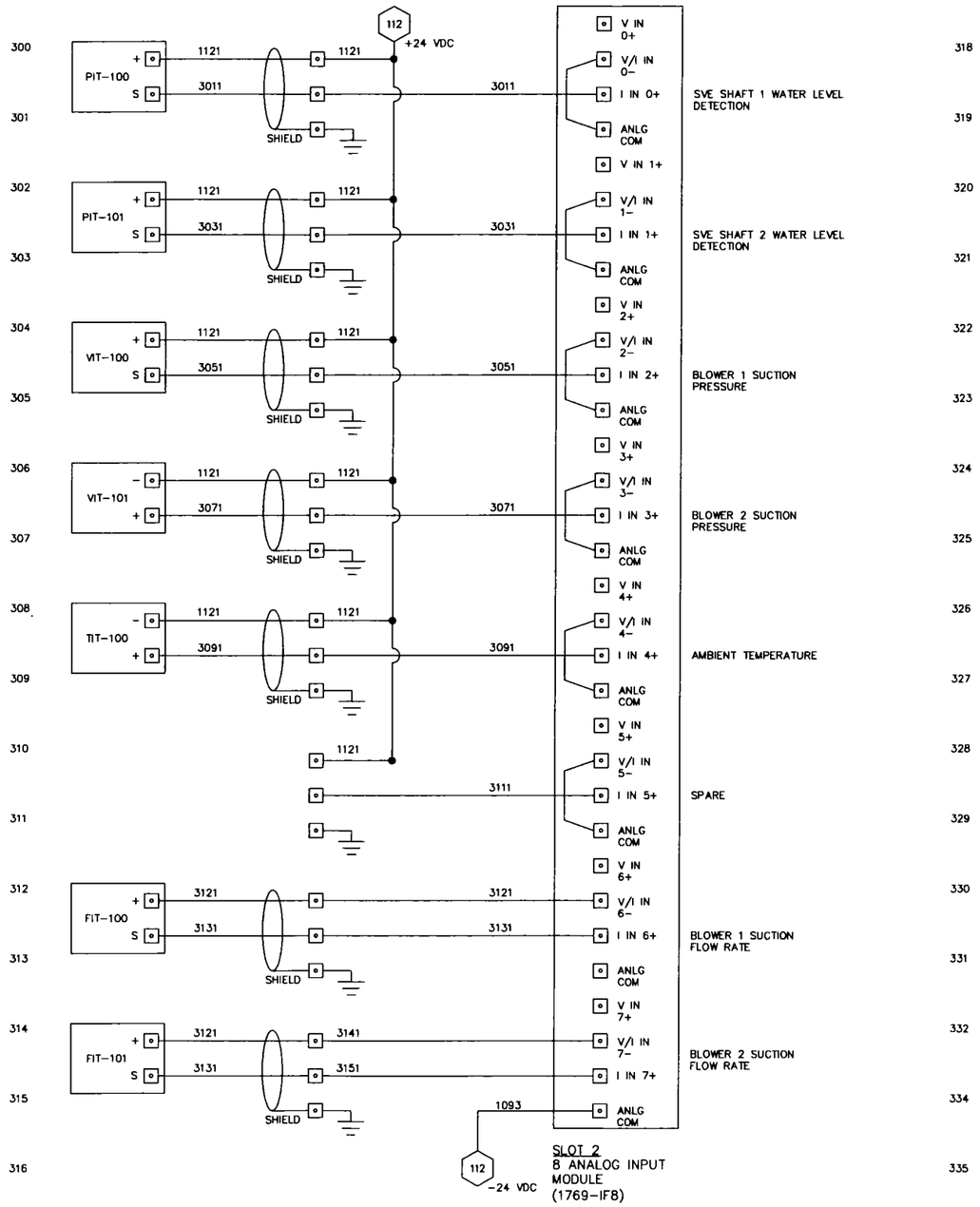

ARCADIS

LEGAL ENTITY:
ARCADIS U.S., Inc.
ARCHITECTURAL AND
ENGINEERING SERVICES, INC.

COPYRIGHT: 2015

CONSULTANTS

NO.	DATE	ISSUED FOR	BY
2	10/2016	AS BUILT - UPDATED FOR GENERATOR	
1	05/2016	AS BUILT	

SEALS

DATE: MARCH 2016
PROJECT NO.:
FILE NAME: TRW_CP_AS-BUILT
DESIGNED BY:
DRAWN BY:
CHECKED BY:

ADDRESS
TRW
STANTON, MO

ARCADIS PROJ. NO. ###

SHEET TITLE
REMEDIAL SYSTEM SLOT 2
ANALOG INPUTS

SCALE:
MCP-3

User:NTHOMAS Spec:PRINE STANDARD File:G:\EIC_DWG\PROJECTS\TRW\STANTON\CAD\PANEL DRAWINGS\AS BUILT\STRW_CP_AS-BUILT.DWG Scale:1:1 Saved Date:10/20/2016 Time:17:29 Plot Date: Thomas, Nick: 10/20/2016, 17:35 - Layout:MCP-3

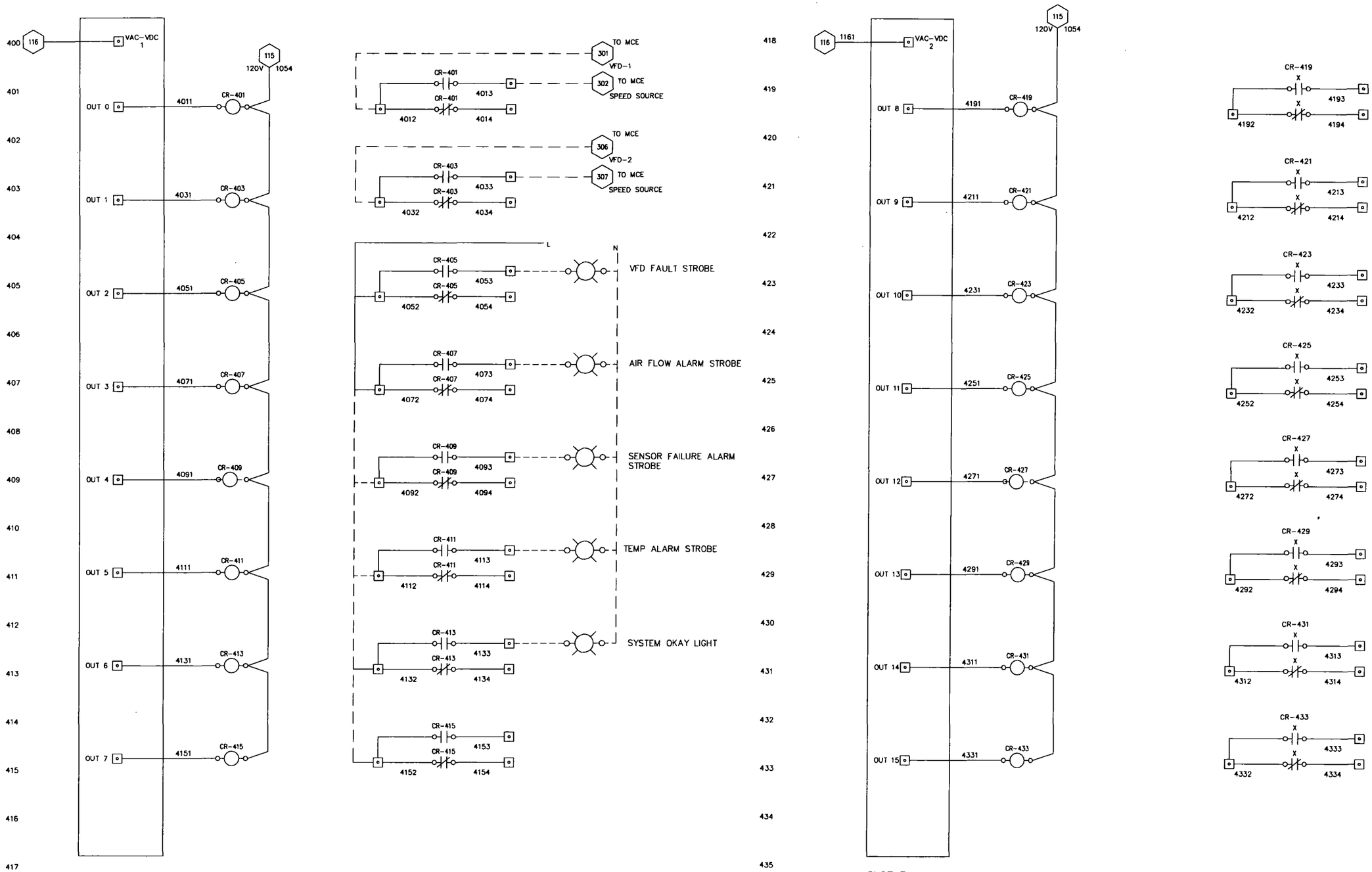

ARCADIS

LEGAL ENTITY:
ARCADIS U.S., Inc.
ARCHITECTURAL AND
ENGINEERING SERVICES, INC.

COPYRIGHT: 2015

CONSULTANTS

NO.	DATE	ISSUED FOR	BY
2	10/2016	AS BUILT - UPDATED FOR GENERATOR	
1	05/2016	AS BUILT	

SEALS

DATE: MARCH 2016
PROJECT NO.:
FILE NAME: TRW_CP_AS-BUILT
DESIGNED BY:
DRAWN BY:
CHECKED BY:

ADDRESS
TRW
STANTON, MO

ARCADIS PROJ. NO. ###

SHEET TITLE
REMEDIAL SYSTEM SLOT 3
RELAY OUTPUTS

SCALE:
MCP-4

User:NTHOMAS Spec:PRIME STANDARD File:Q:\EIC_DWG\PROJECTS\TRW\STANTON\CAD\PANEL DRAWINGS\AS BUILT\TRW_CP_AS-BUILT.DWG Scale:1:1 SavedDate:10/20/2016 Time:17:29 Plot Date: Thomas, Nick; 10/20/2016, 17:35 ; Layout:MCP-4

ATTACHMENT 2

Equipment Specification and
Operation and Maintenance Manuals

cincinnati fan

Form: OMM-08-0509
Effective: 5/4/09
Supersedes: OMM-08-0207
Part No.: 01231

Installation, Safety, Operation & Maintenance Instructions And Parts List

For Models HP-Series I & II, RBE, HDBI, HDAF, SQBI and SQAF

Arrangement 4 Blowers

NOTE

READ ENTIRE MANUAL INCLUDING "SECTION IV. INITIAL UNIT STARTUP" BEFORE ATTEMPTING TO INSTALL AND OPERATE THIS EQUIPMENT.

BLOWER SPECIFICATIONS

BLOWER SERIAL NUMBER: 1604672 **MFG. DATE:** 04/26/16

NOTE The serial number above is a required reference for any assistance. It is stamped on the blower nameplate.

BLOWER SPECIFICATIONS:

Model: HDBI-240 **Arrangement:** 4 **Rotation:** CCW **Discharge:** TH

Wheel Size and Type: SQBI 80%

BLOWER PERFORMANCE DATA: (If entered on order)

CFM: 7500 **SP:** 7.000 (Inches of Water Gauge) **Motor BHP:** 12.500

Density: 0.069 **Altitude:** 1000 (Ft. above S.L.) **Airstream Temperature:** 60 °F.

Fan RPM: 1770 **Maximum Safe Fan RPM:** 2740 @ 60°F **DO NOT EXCEED THIS RPM**

MOTOR DATA: (This section is completed only if the motor was supplied by Cincinnati Fan)

HP: 15 **RPM:** 1750 **Voltage:** 190/380/50 & 230/460/60 **Phase:** 3

Hz: 60 **Frame Size:** 254T **Enclosure:** TEFC **Efficiency:** Prem Eff

IF Motor is EXP, Class(es) & Group(s) are: _____

Manufacturers Model Number: 0154SDSR41A-P **CFV Part Number:** 37600050I

ATTENTION: RECEIVING DEPARTMENT

All Cincinnati Fan products are packaged to minimize any damage during shipment. The freight carrier is responsible for delivering all items in their original condition as received from Cincinnati Fan. The individual receiving this equipment is responsible for inspecting this unit for any obvious or concealed damage. If any damage is found, it should be noted on the bill of lading before the freight is accepted and the receiver must file a claim with the freight carrier.

LONG TERM STORAGE NOTICE

If this blower will NOT be installed and put into operation within 30 days, refer to the "Long Term Storage Instructions" on pages 12 and 13. Failure to follow all applicable long term storage instructions, will void your warranty. This blower should be stored indoors in a clean, dry location.

⚠ DANGER

Hazardous voltage can cause electrical shock and death.	High speed rotating equipment can cause severe personal injury.	Lock out/Tag out to prevent personal injury BEFORE starting ANY service or inspection.	Avoid injury. NEVER operate without ALL required safety guards in place.	Avoid injury. You MUST read and understand all instructions in this manual BEFORE installing.

TABLE OF CONTENTS

I. GENERAL
- A. Unpacking and Handling 2
- B. Safety Accessories & Instructions 2-3

II. INSTALLATION
- A. Vibration 3
- B. Mounting Methods 3-4
- C. Duct Work Connections 4
- D. Safety Guards 4
- E. Dampers and Valves 4
- F. Set Screw & Taper-lock Bushing Torque Values 5

III. ELECTRICAL
- A. Disconnect Switches 5
- B. Motors 5-6
- C. Maximum Blower Speed 6

IV. INITIAL UNIT STARTUP
- A. Pre-Startup & Post-Startup Checks 7
- B. Vibration 8-9

V. ROUTINE INSPECTION & MAINTENANCE 9
- A. Hardware 10
- B. Motor Bearing Lubrication 10
- C. Wheel Balance 10
- D. Vibration 10
- E. Dampers and Valves 10
- F. Safety Equipment or Accessories 10-11

VI. ORDERING PARTS 11

VII. TROUBLESHOOTING 11-12

VIII. LONG TERM STORAGE 12-13

IX. WARRANTY, LIABILITY & RETURNS 14

X. PARTS DRAWING 15

I. GENERAL

A. Unpacking:

Be careful not to damage or deform any parts of the blower when removing it from the packaging container. **All the packaging material should be kept in the event the blower needs to be returned.**

Handling:

Handling of the blower should be performed by trained personnel and be consistent with all safe handling practices. Verify that all lifting equipment is in good operating condition and has the proper lifting capacity. The blower should be lifted using well-padded chains, cables or lifting straps with spreader bars. Some blower models have lifting eye locations provided in the blower base. **NEVER lift the blower by an inlet or discharge flange, motor shaft, motor eye bolt, or any other part of the blower assembly that could cause distortion of the blower assembly.**

B. Safety Instructions & Accessories:

1. **Safety Instructions:**
   All installers, operators and maintenance personnel should read AMCA Publication 410-96, **"Recommended Safety Practices for Users and Installers of Industrial and Commercial Fans"**. This manual is included with the blower. Additional copies can be requested by writing us at Cincinnati Fan, 7697 Snider Rd., Mason, OH 45040-9135
2. **Sound:**
   Some blowers can generate sound that could be hazardous to personnel. It is the responsibility of the user to measure the sound levels of the blower and/or system, determine the degree of personnel exposure, and comply with all applicable safety laws and requirements to protect personnel from excessive noise.

3. **Air Pressure and Suction:**
In addition to the normal dangers of rotating machinery, the blower can present additional hazards from the suction or pressure created at the blower inlet or discharge. Suction at the blower inlet can draw materials into the blower where they become high velocity projectiles at the discharge and cause severe personal injury or death. It can also be extremely dangerous to persons in close proximity to the inlet or discharge as the forces involved can overcome the strength of most individuals.

⚠ WARNING

NEVER OPERATE A BLOWER WITH A NON-DUCTED INLET AND/OR DISCHARGE. IF THE BLOWER INLET AND/OR DISCHARGE IS NON-DUCTED, IT IS THE USERS RESPONSIBILITY TO INSTALL AN INLET AND/OR DISCHARGE GUARD.

4. **Temperature:**
Many blowers, blower components and all motors operate at temperatures that could burn someone if they come in contact with them. If this potential hazard could exist in your installation, steps must be taken by the user to protect anyone from coming in contact with this equipment.

5. **Spark Resistance;** (Per AMCA Standard 99-0401-86 and ISO 13499)

⚠ DANGER

NO GUARANTEE OF ANY LEVEL OF SPARK RESISTANCE IS IMPLIED BY SPARK RESISTANT CONSTRUCTION. IT HAS BEEN DEMONSTRATED THAT ALUMINUM IMPELLERS RUBBING ON RUSTY STEEL CAN CAUSE HIGH INTENSITY SPARKS. AIR STREAM MATERIAL AND DEBRIS OR OTHER SYSTEM FACTORS CAN ALSO CAUSE SPARKS.

6. **Safety Accessories;**
Guards:
All moving parts must be guarded to protect personnel. Safety requirements can vary, so the number and types of guards required to meet company, local, state and OSHA regulations must be determined and specified by the actual user or operator of the equipment.

NEVER start any blower without having all required safety guards properly installed. All blowers should be checked on a regular schedule, for missing or damaged guards. If any required guards are found to be missing or defective, the power to the blower should be immediately turned off and locked out in accordance with OSHA regulations. Power to the blower should NOT be tuned back on until the required guards have been repaired or replaced.

This blower can become dangerous due to a potential "windmill" effect, even though all electrical power has been turned off or disconnected. The blower wheel should be **carefully** secured to prevent any rotational turning ***BEFORE*** working on any parts of the blower/motor assembly that could move.

7. **Access or Inspection Doors:**

⚠ DANGER

NEVER OPEN ANY ACCESS OR INSPECTION DOORS WHILE THE BLOWER IS OPERATING. SERIOUS INJURY OR DEATH COULD RESULT FROM THE AFFECTS OF AIR PRESSURE, AIR SUCTION OR MATERIAL THAT IS BEING CONVEYED. DISCONNECT OR LOCK OUT POWER TO THE BLOWER AND LET THE BLOWER WHEEL COME TO A COMPLETE STOP *BEFORE* OPENING ANY TYPE OF ACCESS OR INSPECTION DOOR.

II. INSTALLATION

A. Vibration:

Before any mounting method is selected, the user should be aware of the effects vibration will have on the blower, motor and other parts. Improper blower installation can cause excessive vibration causing premature wheel and/or motor bearing failure, that is not covered under warranty. Vibration eliminator pads, springs or bases should be properly installed to prevent any blower vibration from transmitting to the foundation, support structure or ducting.

⚠ WARNING

SHUT THE BLOWER DOWN IMMEDIATELY IF THERE IS ANY SUDDEN INCREASE IN VIBRATION.

B. Mounting Methods:

1. **Floor Mounted Units;**

Centrifugal blowers should be mounted on a flat, level, concrete foundation weighing 2-3 times the weight of the complete blower/motor assembly. It is recommended that the foundation be at least 6 inches larger than the base of the blower. The foundation should include anchor bolts such as shown in **Fig. 1** on page 4. Place the blower over the anchor bolts and shim under each bolt until the blower is level. After shimming, flat washers, lock washers and lock nuts should be tightened at each anchor bolt. Any gaps between the blower base and the foundation should be grouted. If the blower will be sitting on some type of vibration pads or mounts, follow the recommended mounting procedures supplied with the vibration elimination equipment.

Fig. 1

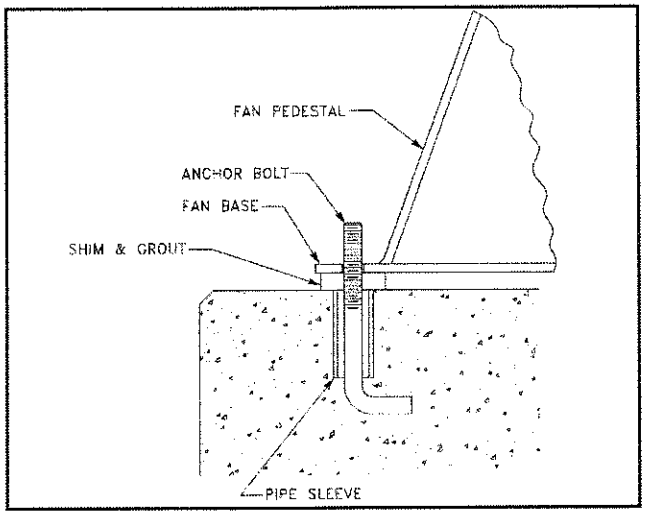

2. **Elevated Units;**

Improper mounting of elevated blowers can cause vibration problems. The structure that the blower/motor assembly will be mounted on must be strong enough to support at least 3 times the weight of the entire blower/motor assembly. **An insufficient support will cause excessive vibration and lead to premature wheel and/or motor bearing failure.** Bracing of the support structure must be sufficient enough to prevent any side sway. The entire structure should be welded at all connection joints to maintain constant alignment of the platform.

⚠ DANGER

THE IMPROPER DESIGN OF AN ELEVATED PLATFORM STRUCTURE COULD RESULT IN A RESONANT CONDITION, AND CONSEQUENTLY, CAUSE A LIFE THREATENING, CATASTROPHIC, STRUCTURAL FAILURE.

C. Duct Work Connections:

All duct connections to the blower should include flexible connectors between the ducting and the blower inlet and/or discharge. This will eliminate distortion, noise and vibration from transmitting to the duct and building. The connectors should be selected to handle the operating conditions for air volume and pressure that the blower will produce. **All ducting or accessories, added by the user, should be independently supported. DO NOT use the blower/motor assembly to support any additional weight.** Inlet and/or discharge duct elbows should be located a minimum of 2 blower wheel diameters from the blower. Any duct elbows located closer than 2 wheel diameters to the blower inlet or discharge **WILL** reduce the air performance and blower efficiency. Any duct elbows near the blower discharge should be in the **same rotational direction** as the **blower rotation.**

Non-Ducted Blower Inlet:

Any blower with no ducting on the inlet **must** have an inlet guard. The blower should be located so the blower inlet is, at least, 1 wheel diameter away from any wall or bulkhead to eliminate a reduction in air flow.

Non-Ducted Blower Discharge:

Any blower with no ducting on the discharge **must** have a discharge guard.

D. Safety Guards:

Cincinnati Fan offers guards, as optional, to keep your blower in compliance with OSHA safety regulations. These include inlet or discharge guards. Any blowers built with high temperature construction, a "heat slinger guard" is standard. It is the responsibility of the user to make sure this blower meets all local, state and OSHA safety regulations. If you have a specific guard requirement not covered by OSHA, please contact the local Cincinnati Fan sales office for assistance.

E. Dampers and Valves: (Airflow control devices)

If the blower is supplied with any type of air flow control device, it should be closed before initial start-up of the blower to minimize overloading of the motor. Any airflow control device, with bearings, should be maintained in accordance with the manufacturers instructions. Any air flow control device, with an automatic control mechanism, should be adjusted per the manufacturers recommendations.

F. Set Screw and Taper-lock Bushing Torque Values:

All blower wheel set screws are tightened to the proper torque prior to shipment. Some wheels may have taper-lock hubs and split, taper-lock bushings to secure the wheel to the motor shaft.

NOTE: Check all set screw or taper-lock bushing torques. Forces encountered during shipment, handling, rigging and temperature can affect factory settings. For correct torque values, see **Tables 1** and **2** below.

Table 1

SET SCREW TORQUE VALUES		
Diameter & Number of Treads/Inch	Hex Wrence Size (Across Flats)	Required Torque (Inch Pounds)
1/4-20	1/8"	65
5/16-18	5/32"	165
3/8-16	3/16"	228
7/16-14	7/32"	348
1/2-13	1/4"	504
5/8-11	5/16"	1104

Table 2

TORQUE VALUES FOR TAPER-LOCK BUSHINGS	
Taper-lock Bushing Size	Required Torque (Inch Pounds)
H	95
B	192
P	192
Q	350
R	350

⚠ CAUTION

Set screws should NEVER be used more than once. If the set screws are loosened, they MUST be replaced. Use only knurled, cup-point, set screws with a nylon locking patch.

III. ELECTRICAL

A. Disconnect Switches:

All blower motors should have an independent disconnect switch located in close visual proximity to turn off the electrical service to the blower motor. **Disconnects must be locked out in accordance with OSHA "lock out-tag out" procedures any time inspection or maintenance is being performed on the blower and/or motor assembly. The "lock out-tag out" procedure should be performed by a licensed electrician or authorized personnel.** All disconnects should be sized in accordance with the latest NEC codes (National Electric Codes) and any local codes and should be installed only by a licensed electrician. "Slow blow" or "time delay" fuses or breakers should be used since the initial start-up time for the blower motor, although rare, can be up to 10 seconds.

B. Motors:

⚠ DANGER

ALL WIRING CONNECTIONS, INSPECTION AND MAINTENANCE OF ANY MOTOR MUST BE PERFORMED BY A LICENSED ELECTRICIAN IN ACCORDANCE WITH THE MOTOR MANUFACTURERS RECOMMENDATIONS, ALL ELECTRICAL CODES AND OSHA REGULATIONS. FAILURE TO PROPERLY INSTALL, MAKE WIRING CONNECTIONS, INSPECT OR PERFORM ANY MAINTENANCE TO A MOTOR CAN RESULT IN MOTOR FAILURE, PROPERTY DAMAGE, EXPLOSION, ELECTRICAL SHOCK AND DEATH.

1. **DO NOT connect or operate a motor without reading the motor manufacturers instructions supplied with the blower.** The basic principle of motor maintenance is: **KEEP THE MOTOR CLEAN AND DRY.** This requires periodic inspections of the motor. The frequency of the inspections depends on the type of motor, the service and environment it will be subjected to and the motor manufacturers instructions.
2. **Cleaning:** Cleaning should be limited to exterior surfaces only. **Follow motor manufacturers cleaning instructions.**
3. **Lubrication:** Most small motors have sealed bearings that are permanently lubricated for the life of the motor. Some larger motors have grease plugs that should be replaced with grease fittings to perform re-lubrication. These motors, or any motor with grease fittings, should be lubricated in accordance with the motor manufacturers recommendations. Lubrication frequency depends on the motor horsepower, speed and service. **BE SURE** you use compatible grease and **DO NOT** over grease.
4. **Location:** If the motor will be outside and subjected to the weather, it is recommended that a weather cover be installed to keep rain and snow off of the motor. No motors are guaranteed to be "watertight". Be careful to allow enough openings between the motor and the motor cover to let the motor "breath". If the back end of the motor is covered, the cover should be no closer than 3" to the back of the motor for proper ventilation.

5. **Wiring Connections:** All wiring connections should be made for the proper voltage and phase as shown on the motor nameplate. Connections should follow the motor manufacturers recommendations as shown on the wiring schematic. This wiring diagram will be located on the outside of the motor, inside of the motor conduit box or on the motor nameplate. **Reversing some wires might be necessary to get the correct blower rotation.**
6. **Motors with Thermal Overload Protection:** If a motor is equipped with thermal overloads, the thermal overload must be wired per the wiring schematic to be operable. ***There are 3 types of thermal overloads:***
   a. **Automatic:** These will automatically shut the motor down if the internal temperature exceeds the design limits.

⚠ DANGER

MAKE SURE YOU LOCK OUT THE POWER TO THE MOTOR BEFORE INSPECTING ANY MOTOR WITH AUTOMATIC THERMALS. WHEN THE THERMALS COOL DOWN, THEY WILL ALLOW THE MOTOR TO AUTOMATICALLY START UP AGAIN, UNLESS YOU HAVE LOCKED OUT THE POWER TO THE MOTOR.

   b. **Manual:** These motors will have a button on them. If the motor overheats, it will shut down. After you have inspected the motor and eliminated the over heating problem, you will need to "reset" it by pushing the button. **You should still lock out the power BEFORE inspecting the motor.**
   c. **Thermostats:** This type of thermal is a temperature sensing device **ONLY**. If the motor overheats, the thermostats will open or close (depending on the type) and send a **"signal"** to the electrical box. ***THEY WILL NOT TURN THE MOTOR OFF.*** **These are pilot circuit devices that must be connected to the magnetic starter circuit.**

7. **EXPLOSION PROOF Motors:** No motor is explosion proof. Explosion proof (EXP) motors are designed so if there is an explosion **WITHIN** the motor, the explosion will be **CONTAINED INSIDE** the motor and not allowed to get out to the atmosphere. All explosion proof motors must be selected based on the atmosphere and/or the environment the motor will be operating in. Explosion proof motors are designed, rated, and labeled for their operating conditions based on Classes, Groups and "T" Codes. **The Class, Group and "T" Code of an EXP motor MUST be selected based on the atmosphere and/or environmental conditions the motor will be operating in. Consult the NEC (National Electric Code) and the NFPA (National Fire Protection Association) for the proper EXP motor Class, Group and "T" Code required for your specific application and location.**

⚠ DANGER

IF AN EXPLOSION PROOF MOTOR IS USED IN AN AREA CONTAINING VOLITILE LIQUIDS, GASES, FUMES OR DUST FOR WHICH THE MOTOR WAS NOT DESIGNED TO OPERATE IN, AN EXPLOSION AND/OR FIRE CAN OCCUR.

NOTICE:
   a. **All EXP motors have some type of thermal overload as required by UL (Underwriters Laboratories). Refer to all of Section 6 above.**
   b. **All EXP motors are required to have the UL (Underwriters Laboratories) and CSA (Canadian Standards Association) listing numbers on the motor name plate or on a separate plate attached to the motor. The Class, Group and "T" Code the motor is designed for must also be listed.**

8. **Normal Motor Operating Temperatures:**
   Using your hand to test the normal running temperature of a motor can be a very painful experience;
   The normal operating temperature of a fully loaded, open type, electric motor operating in a 70°F. (21° C.) ambient temperature is 174°F. (79° C.)

C. Maximum Blower Speed and Motor Speed Controllers:

If you will be using any type of motor speed controller with this blower, **DO NOT** exceed the **maximum safe blower speed.** Installing and using a speed control device requires special training and certification as required by the speed control manufacturer. See the manufacturers instructions for proper use, installation and wiring connections for the maximum speed settings. It may also be necessary to "block out" some speeds to eliminate a resonant vibration problem. The maximum safe blower speed is shown on the data sheet shipped with the blower. If you have lost the data sheet, contact Cincinnati Fan or our sales office for your area. You must have the serial number from the **blower** name plate for us to determine the maximum safe blower speed. Cincinnati Fan will only extend the motor manufacturers warranty, when used with a speed controlling device, if the motor has the words **"Inverter Duty"** marked on the motor name plate. If the motor does not have **"Inverter Duty"** marked on the motor name plate, and you have a motor failure, you will be required to contact the motor manufacturer for any service or warranty claims.

IV. INITIAL UNIT STARTUP

NOTICE: Failure to complete and document all the following pre-startup and both post-startup checks, listed in sections A (below) and B on page 8, could void all warranties.

A. Pre-Startup & Post-Startup Checks: (Check blocks as each step is completed. Retain this for your records.)

A1. Pre-Startup Checks Completed By: _____ **DATE:** _____

A2. 8 Hour, Post-Startup Checks Completed By: _____ **DATE:** _____

A3. 3 Day, Post-Startup Checks Completed By: _____ **DATE:** _____

MAKE SURE POWER TO THE MOTOR IS LOCKED OUT BEFORE STARTING PRE-STARTUP OR POST-STARTUP CHECKS.

1. ☐☐☐ If possible, *CAREFULLY* spin the blower wheel by hand to ensure it rotates freely and no rubbing or clicking noise is heard.
2. ☐☐☐ Check all blower, foundation and duct work hardware to make sure it is tight.
3. ☐☐☐ Check all blower wheel set screws to make sure they are tight per **Table 1** on page 5.
4. ☐☐☐ If the wheel has a taper-lock bushing, make sure the bolts are tightened per **Table 2** on page 5.
5. ☐☐☐ Make certain there is no foreign material in the blower or duct work that can become a projectile.
6. ☐☐☐ Make sure any inspection doors in the duct work are securely bolted or locked.
7. ☐☐☐ Ensure all electrical power components are properly sized and matched for your electrical system.
8. ☐☐☐ Check that all required guards are properly secured.
9. ☐☐☐ Any dampers should be fully opened and closed to make sure there is no binding or interference.
10. ☐☐☐ If your blower is mounted on an elevated support structure, make sure the structure is welded at all the joint connections and the structure is properly braced to prevent "side sway".
11. ☐☐☐ Close any dampers to minimize load on motor. Especially on blowers with high temperature construction. **Never** subject a "cold" blower to a "hot" gas stream. If the blower will be handling "hot gases" greater than 150°F (65°C) it is imperative that the blower be subjected to a gradual rate of temperature increase, not to exceed 15°F/minute (8°C/minute). The same temperature limits are also important when the blower is experiencing a drop in temperature until the temperature drops down to 150°F (65°C). Only, when the entire blower has reached an equilibrium temperature of 150°F (65°C), or less, should the power be turned off.
12. ☐☐☐ Make sure the power source connections to the blower motor are per the motor manufacturers instructions.
13. ☐☐☐ Make sure the blower wheel is stationary prior to startup. **Starting a blower with a wheel that is rotating backwards can cause wheel damage.**
14. ☐☐☐ Apply power to the blower motor momentarily (i.e. "bump start") to check for proper blower wheel rotation. If the blower is rotating in the wrong direction, reconnect the motor leads per the motor manufacturers wiring schematic. **Blower rotation is determined by viewing the blower from the motor side of the blower, NOT from the inlet side.** After reconnecting the leads, repeat this step. **See Fig. 2 below.**

Fig. 2

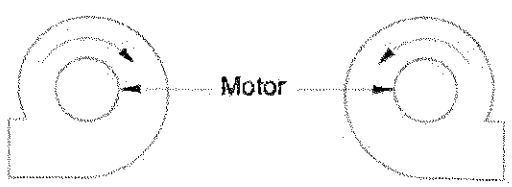

Clockwise (CW) Rotation — **Counter-Clockwise (CCW) Rotation**

15. ☐☐☐ Apply power to the blower motor and let it come up to full speed. **Turn off the power.** Look and listen for any unusual noise or mechanical abnormality while the blower wheel is still spinning. If any are noticed, lock out the power, wait for the blower wheel to come to a complete stop, locate the cause and correct it.
16. ☐☐☐ Unlock power and start the blower.
17. ☐☐☐ Measure, record and keep the following motor data for future reference and comparison:
(Single phase motors will only have L1 and L2 leads)

Amperage draw on each motor lead: L1 _____ **L2** _____ **L3** _____
(Running amps **SHOULD NOT** exceed the motor nameplate amps for the voltage being operated on)

Voltage coming to motor leads: L1_____ **L2**_____ **L3**_____
(Should be about the same input voltage on all leads)

B. Vibration:

The blower was balanced at the factory to comply with ANSI/AMCA Standard 204-05, Category BV-3. However, rough handling in shipment and/or erection, weak and/or non-rigid foundations, and misalignment may cause a vibration problem after installation. After installation, the vibration levels should be checked by personnel experienced with vibration analysis and vibration analysis equipment.

NOTE:

The blower SHOULD NOT be operated if the vibration velocity of the fan exceeds 0.40 inches per second, filter out, if the blower is rigidly mounted. If the blower is mounted on isolators or on an isolator base, it SHOULD NOT be operated if the vibration velocity of the blower exceeds 0.65 inches per second, filter out.

Vibration readings for direct driven blowers should be taken on the motor at the top, sides and end as per **Fig. 3** below. After you have taken your vibration readings, write them down in the spaces below and keep for future comparison.

⚠ DANGER

If the blower is going to be conveying material, it is the users responsibility to periodically turn the blower off and lock out the power. The blower wheel should then be checked for material build-up and/or erosion. If material has built up on any parts of the wheel, it MUST be removed and cleaned before it is put back into service. If any parts of the wheel have been eroded, the wheel MUST be replaced. Failure to perform this inspection can cause excessive vibration that will damage the blower and/or motor bearings. When vibration becomes excessive, it will lead to complete blower failure that could cause property damage, severe personal injury and death. The user must determine the frequency of this inspection based on the actual circumstances of their operation, BUT checking the vibration readings should NEVER exceed a 12 month period. For the AMCA/ANSI standard for vibration limits, see Fig. 4 on page 9.

Fig. 3

VIBRATION METER PROBE POSITIONS

For Arrangement 4 Blowers

	1	2	3	4	5
A					
B					
C					

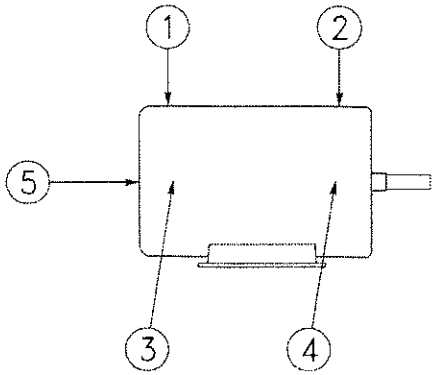

A Pre-Startup ..... **Readings taken by:** _____ **Date:** _____

B 8 Hour Post-Startup ..... **Readings taken by:** _____ **Date:** _____

C 3 Day Post-Startup ..... **Readings taken by:** _____ **Date:** _____

Fig. 4 Vibration Severity Chart

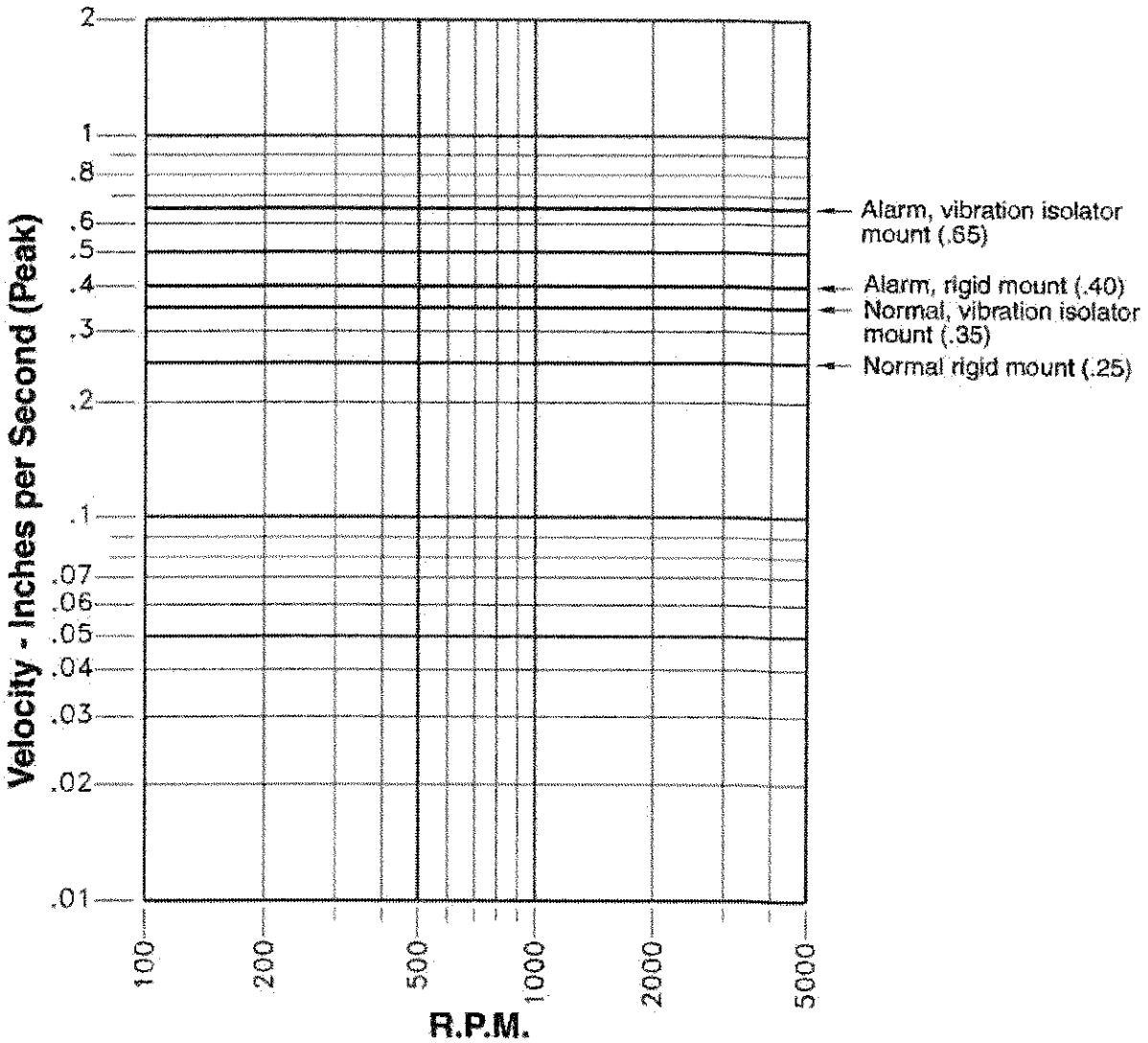

V. ROUTINE INSPECTION & MAINTENANCE

Periodic inspection of all the blower parts is the key to good maintenance and trouble-free operation. The frequency of inspections must be determined by the user and is dependent upon the severity of the application. **BUT**, it should **NEVER** exceed a 12 month period. The user should prepare an inspection and maintenance schedule and make sure it is adhered to.

⚠ WARNING

BEFORE STARTING ANY INSPECTION OR MAINTENANCE, BE SURE BLOWER IS TURNED OFF, POWER IS LOCKED OUT AND THE BLOWER WHEEL HAS BEEN CAREFULLY SECURED TO PREVENT WIND MILLING. IF THE OPERATING CONDITIONS OF THE BLOWER ARE TO BE CHANGED (SPEED, PRESSURE, TEMPERATURE, ETC.) CONSULT CINCINNATI FAN, OR OUR SALES OFFICE FOR YOUR TERRITORY, TO DETERMINE IF THE UNIT WILL OPERATE SAFELY AT THE NEW CONDITIONS.

A. Hardware:

All blower and foundation hardware should be checked to make sure it is tight. Wheel set screws or taper-lock bushings should be tightened to the torque values shown in **Tables 1 and 2** on page 5.

NOTE: If any set screws have come loose, they must be thrown away and replaced. NEVER use set screws more than once. **Replace with knurled, cup-point set screws with a nylon locking patch.**

B. Motor Bearing Lubrication:

Most smaller motors have sealed bearings that never require re-lubrication for the life of the motor. For any motors with grease fittings, consult the motor manufacturers recommendations with reference to the lubrication frequency and the type of grease that should be used.

DO NOT over grease the motor bearings. Generally, 1-2 shots should be enough. Use a hand operated grease gun at no more than 40 PSI. ***IF POSSIBLE, CAREFULLY*** **lubricate the motor bearings while the motor is running.**

C. Wheel Balance:

All blower wheels are balanced at the factory. It is not uncommon that additional "trim balancing" is required after the blower is assembled. Trim balancing of the blower assembly, in the field, is typically always necessary for all replacement wheels. **After any wheel is installed, the final balance of the entire blower assembly should be checked.** Refer to **Section B** on page 8 and **Fig. 4** on page 9. Air stream material or chemicals can cause abrasion or corrosion of the blower parts. This wear is generally uneven and, over time, will lead to the wheel becoming unbalanced, causing excessive vibration. When that happens, the wheel must be rebalanced or replaced. The other air stream components should also be inspected for wear or structural damage and cleaned or replaced if necessary. **After cleaning any blower wheel, it should be balanced and then "trim balanced" on the motor shaft.**

There are two ways to balance a blower wheel:

1. **Add balancing weights for fabricated aluminum, steel or stainless steel wheels:**
   Balance weights should be rigidly attached to the wheel at a location that will not interfere with the blower housing nor disrupt air flow. They should (if at all possible) be welded to the wheel. When trim balancing the wheel, **on the blower,** be sure to ground the welder **directly** to the blower wheel. Otherwise, the welding current will likely pass through the motor and damage the motor bearings.
2. **Grinding off material for cast aluminum wheels: (on some models only)**
   If you are grinding on the wheel to remove material, be very careful not to grind too much in one area. That could affect the structural integrity of the wheel.

   NOTE:
   Removing any Backward Inclined or Airfoil wheel from the blower to clean it, requires special attention when reinstalling the wheel back into the blower housing. Make sure you reinstall the wheel so the proper wheel-to-inlet clearance is maintained. Failure to do this will affect the blowers airflow (CFM), static pressure (SP) capabilities and efficiency. Consult Cincinnati Fan or our local sales office for your area for assistance if necessary.

D. Vibration:

As mentioned previously in this manual, excessive vibration can cause premature motor bearing failure that could lead to catastrophic failure of the blower. After performing any routine maintenance, the vibration readings should be taken again. New readings should be taken (maximum every 12 months) and compared to the readings you recorded in **Figure 3**, on page 8, during the initial startup. **If any major differences are present, the cause should be determined and corrected before the blower is put back into operation.**

The most common causes of vibration problems are:

1. Wheel unbalance.
2. Mechanical looseness.
3. Poor blower inlet and/or discharge conditions.
4. Foundation stiffness.

E. Dampers and Valves: (Airflow control devices)

Turn off and lock out power to the blower motor. Any dampers or valves should be periodically inspected to make sure all parts are still operable within their full range and there is no interference with any other damper or blower components. Any bearings or seals should be checked for their proper function. The manufacturers maintenance instructions should be followed.

F. Safety Equipment & Accessories:

It is the users responsibility to make sure that all safety guards required by the company, local, state and OSHA regulations are properly attached and fully functional at all times. If any guards become defective or non-functional at any time, **the power to the blower MUST be turned off and locked out** until complete repairs and/or replacements have been made, installed and inspected by authorized personnel.

Any accessories used in conjunction with the blower should also be inspected to make sure they are functioning within their intended limits and design specifications. The manufacturers maintenance manuals should be referred to for correct maintenance procedures. These accessories include, but are not limited to, the following:
Shaft seals, inspection doors, vibration isolators or vibration bases, air flow or pressure measuring equipment, hoods, controls, special coatings, silencers, expansion joints, valves, flexible connectors and filters.

VI. ORDERING REPLACEMENT PARTS:

Under normal conditions, you should not need any spare or replacement parts for at least 24 months after shipment from Cincinnati Fan. That does not include any wear due to abrasion, corrosion, excessive temperatures, abuse, misuse, accident or any severe conditions the fan was not designed for.

NOTICE:

1. **If this blower is vital to any process that could cost you lost revenue, we strongly recommend that you keep a replacement blower wheel and motor at your location.**

2. **If this blower is vital for the safety of any people and/or animals, we strongly recommend that you keep a complete blower/motor assembly, as originally ordered, at your location.**

To order any parts or complete units, contact us for the name of our sales office for your area. Or you can find them on our website at: **www.cincinnatifan.com**

WE MUST HAVE THE BLOWER SERIAL NUMBER FROM THE BLOWER NAME PLATE TO IDENTIFY PARTS CORRECTLY.

VII. TROUBLESHOOTING

⚠ DANGER

Troubleshooting should only be performed by trained personnel. Any potential electrical problems should only be checked by a licensed electrician. All safety rules, regulations and procedures MUST be followed. Failure to follow proper procedures can cause property damage, severe bodily injury and death.

Potential problems and causes listed below are in no order of importance or priority. The causes are only a list of the most common items to check to correct a problem. If you find the cause of a problem, **DO NOT** assume it is the **ONLY** cause of that problem. Different problems can have the same causes.

PROBLEM	CAUSE
Excessive Vibration	1. Loose mounting bolts, wheel set screws, taper-lock hubs. 2. Worn or corroded blower wheel. 3. Accumulation of foreign material on blower wheel. 4. Bent motor shaft. 5. Worn motor bearings. 6. Motor out of balance. 7. Inadequate structural support. 8. Support structure not sufficiently cross braced. 9. Weak or resonant foundation. 10. Foundation not flat and level.
Airflow (CFM) Too Low	1. Blower wheel turning in wrong direction (**rotation**). 2. Actual system static pressure (**SP**) is higher than expected. 3. Motor speed (**RPM**) too low. 4. Dampers or valves not adjusted properly. 5. Leaks or obstructions in duct work. 6. Filters dirty. 7. Inlet and/or discharge guards are clogged. 8. Duct elbow too close to blower inlet and/or discharge. 9. Improperly designed duct work 10. Blower wheel not properly located relative to the inlet bell (Models **HDBI, HDAF, SQBI** and **SQAF** only).
Airflow (CFM) Too High	1. Actual system static pressure (**SP**) is lower than expected. 2. Motor speed (**RPM**) too high. 3. Filter not in place. 4. Dampers or valves not adjusted properly.

PROBLEM	CAUSE
Motor Overheating	**NOTE: A normal motor will operate at 174°F. See B-8 on page 6.** 1. Actual system static pressure **(SP)** is lower than expected. 2. Voltage supplied to motor is too high or too low. 3. Motor speed (**RPM**) too high or defective motor. 4. Air density higher than expected. 5. Motor wired incorrectly or loose wiring connections. 6. Cooling fan cover on back of motor is clogged. (Fan cooled motors only.)
Excessive Noise	1. Wheel rubbing inside of housing. 2. Worn or corroded blower wheel. 3. Accumulation of foreign material on blower wheel. 4. Loose mounting bolts, wheel set screws, or taper-lock hubs. 5. Bent motor shaft. 6. Worn motor bearings. 7. Motor out of balance. 8. Motor bearings need lubrication. 9. Vibration originating elsewhere in system. 10. System resonance or pulsation. 11. Inadequate or faulty design of blower support structure. 12. Blower operating near "stall" condition due to incorrect system design or installation.
Fan Doesn't Operate	1. Motor wired incorrectly. 2. Incorrect voltage supply. 3. Defective fuses or circuit breakers. 4. Power turned off elsewhere. 5. Motor wired incorrectly or loose wiring connections. 6. Defective motor.

VIII. LONG TERM STORAGE INSTRUCTIONS: (Storage exceeding 30 days after receipt of equipment)

NOTE: Failure to adhere to these instructions voids all warranties in their entirety.

1. Storage site selection:
   a. Level, well-drained, firm surface, in clean, dry and warm location. Minimum temperature of 50°F (10°C).
   b. Isolated from possibility of physical damage from construction vehicles, erection equipment, etc.
   c. Accessible for periodical inspection and maintenance.
2. The blower should be supported under each corner of its base to allow it to "breath". Supports (2 x 4's, timbers, or railroad ties) should be placed diagonally under each corner.
3. If the equipment is to be stored for more than three (3) months, the entire blower assembly must be loosely covered with plastic, **but not tightly wrapped**.
4. Storage Maintenance:

   A periodic inspection and maintenance log, by date and action taken, must be developed and maintained for each blower. See example below. Each item must be checked monthly.

EXAMPLE:

Storage / Maintenance Schedule Log

ITEM	ACTION	DATES CHECKED
1	Re-inspect units to insure any protective devices used are functioning properly. Check for scratches in the finish which will allow corrosion or rust to form.	
2	Rotate wheel a minimum of 10 full revolutions to keep the motor bearing grease from separating and drying out. ***This is a critical step.***	

Long Term Storage instructions continued on page 13.

5. General Motor Procedure:

   If the motor is not put into service immediately, the motor must be stored in a clean, dry, warm location. Minimum temperature of 50°F. (10°C,). Several precautionary steps must be performed to avoid motor damage during storage.

   a. Use a "Megger" each month to ensure that integrity of the winding insulation has been maintained. Record the Megger readings. Immediately investigate any significant drop in insulation resistance.
   b. **DO NOT** lubricate the motor bearings during storage. Motor bearings are packed with grease at the factory.
   c. If the storage location is damp or humid, the motor windings **must** be protected from moisture. This can be done by applying power to the motor's space heaters, (IF AVAILABLE) while the motor is in storage. If the motor does not have space heaters, storing it in a damp or humid location will, very quickly, cause internal corrosion and motor failure which is not warranted.

   ***NOTE*:**
   For specific storage instructions, for the actual motor and any accessory parts that were supplied, refer to the manufacturer's instructions.

IX. LIMITED WARRANTY:

Cincinnati Fan & Ventilator Company (Seller) warrants products of its own manufacture, against defects of material and workmanship under normal use and service for a period of eighteen (18) months from date of shipment or twelve (12) months from date of installation, whichever occurs first. This warranty does not apply to any of Seller's products or any part thereof which has been subject to extraordinary wear and tear, improper installation, accident, abuse, misuse, overloading, negligence or alteration. This warranty does not cover systems or materials not of Seller's manufacture. On products furnished by Seller, but manufactured by others, such as motors, Seller extends the same warranty as Seller received from the manufacturer thereof. Expenses incurred by Purchaser's in repairing or replacing any defective product will not be allowed except where authorized in writing and signed by an officer of the Seller.

The obligation of the Seller under this warranty shall be limited to repairing or replacing F.O.B. the Seller's plant, or allowing credit at Seller's option. **THIS WARRANTY IS EXPRESSLY IN LIEU OF ALL OTHER WARRANTIES EITHER EXPRESSED OR IMPLIED INCLUDING THE WARRANTIES OF MERCHANTABILITY AND FITNESS FOR A PARTICULAR PURPOSE AND OF ALL OTHER OBLIGATIONS AND LIABILITIES OF THE SELLER. THE PURCHASER ACKNOWLEDGES THAT NO OTHER REPRESENTATIONS WERE MADE TO PURCHASER OR RELIED UPON BY PURCHASER WITH RESPECT TO THE QUALITY OR FUNCTION OF THE PRODUCTS HEREIN SOLD.**

Removal of the Sellers nameplate or any generic fan nameplate containing the fan serial number voids all warranties, either written or implied. Failure to complete and document all the pre-startup and post startup checks and perform the suggested routine maintenance checks voids all warranties, either written or implied.

LIMITATION OF LIABILITY:

Notice of any claim, including a claim for defect in material or workmanship, must be given to Seller in writing within 30 days after receipt of the equipment or other products. Seller reserves the right to inspect any alleged defect at Purchaser's facility before any claim can be allowed and before adjustment, credit, allowance replacement or return will be authorized. See **RETURNS** below. Seller's liability with respect to such defects will be limited to the replacement, free of charge, of parts returned at Purchaser's expense F.O.B. Seller's plant and found to be defective by the Seller.

IN NO EVENT WILL SELLER BE LIABLE FOR SPECIAL, INDIRECT, INCIDENTAL OR CONSEQUENTIAL DAMAGES, WHETHER IN CONTACT, TORT, NEGLIGENCE, STRICT LIABILITY OR OTHERWISE, INCLUDING WITHOUT LIMITATION DAMAGES FOR INJURY TO PERSONS OR PROPERTY, LOST PROFITS OR REVENUE, LOST SALES OR LOSS OF USE OF ANY PRODUCT SOLD HEREUNDER. PURCHASER'S SOLE AND EXCLUSIVE REMEDY AGAINST SELLER WILL BE THE REPLACEMENT OF DEFECTIVE PARTS AS PROVIDED HEREIN OR REFUND OF THE PURCHASE PRICE FOR DEFECTIVE PRODUCTS, AT SELLER'S SOLE OPTION. SELLER'S LIABILITY ON ANY CLAIM, WHETHER IN CONTRACT, TORT, NEGLIGENCE, STRICT LIABILITY OR OTHERWISE, FOR ANY LOSS OR DAMAGE ARISING OUT OF OR IN CONNECTION WITH PURCHASER'S ORDER OR THE PRODUCTS OR EQUIPMENT PURCHASED HEREUNDER, SHALL IN NO CASE EXCEED THE PURCHASE PRICE OF THE EQUIPMENT GIVING RISE TO THE CLAIM.

RESPONSIBILITY:

It is the understanding of the Seller that Purchaser and/or User will use this equipment in conjunction with additional equipment or accessories to comply with all Federal, State and local regulations. The Seller assumes no responsibility for the Purchaser's or Users compliance with any Federal, State and local regulations.

RETURNS:

Cincinnati Fan & Ventilator Company assumes no responsibility for any material returned to our plant without our permission. An **RMA** (Return Material Authorization) number must be obtained and clearly shown on the outside of the carton or crate and on a packing slip. Any items returned must be shipped freight prepaid. Failure to comply will result in refusal of the shipment at our receiving department.

DISCLAIMER

This manual, and all its content herein, is based on all applicable known material at the time this manual was created. **Any parts of this manual are subject to change at any time and without notice.**
If any statements, diagrams and/or instructions contained herein, **for components not manufactured by the Seller,** conflict with instructions in the manufacturer's manual (i.e.: motors, dampers, etc.), the instructions in the manufacturer's manual, for that component take precedent.
Should you want the latest version of this manual, please contact us or our sales office for your area. Or, you can print a current version by going to our website at: **www.cincinnatifan.com**

cincinnati fan

7697 Snider Road, Mason, OH 45040-9135
Phone: (513) 573-0600 Fax: (513) 573-0640
E-Mail: sales@cincinnatifan.com

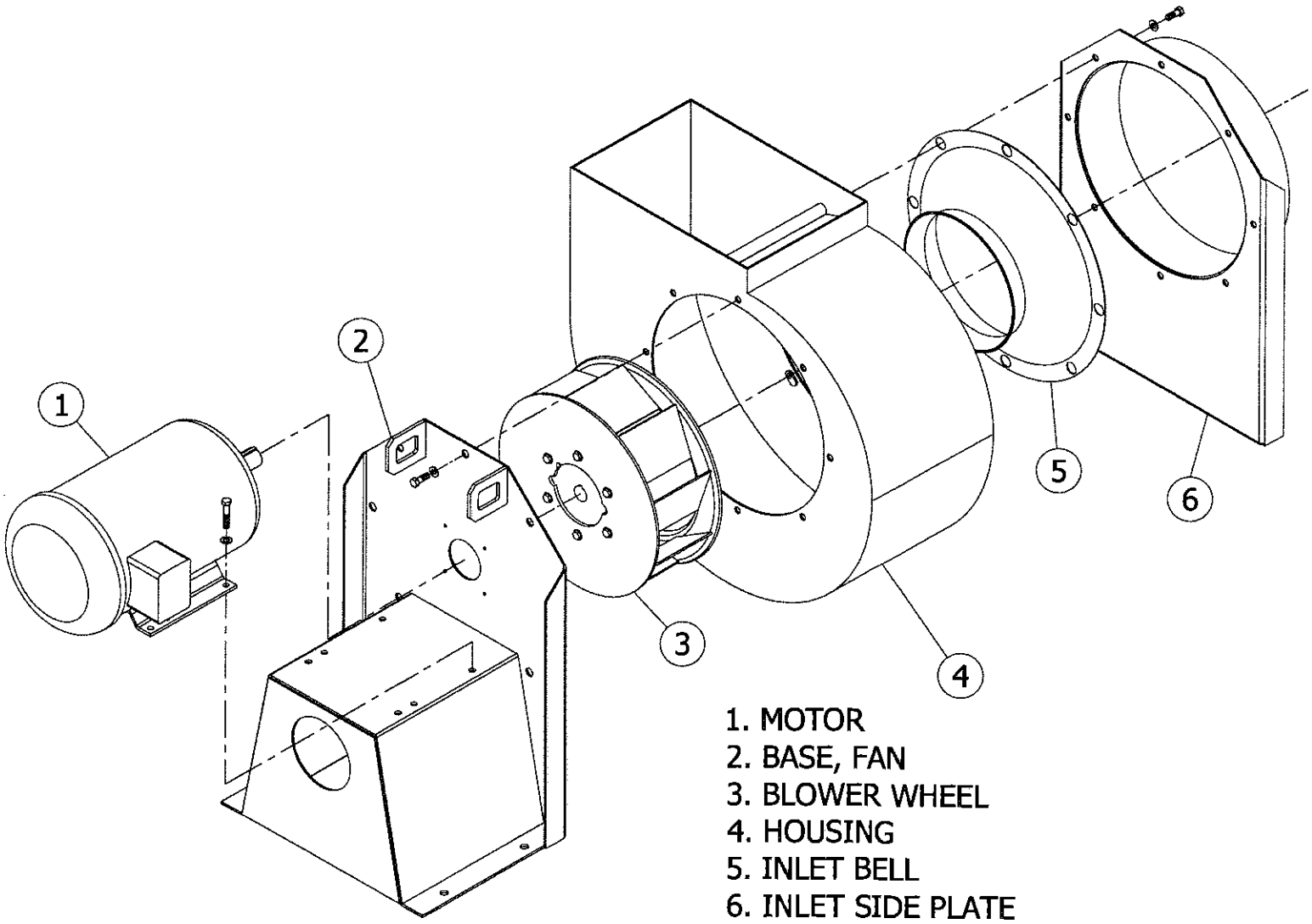

HDBI & HDAF ARRANGEMENT 4

The drawing shown above is a representation of the basic model blower or fan purchased on the serial number shown on page 1. It does not include any optional or accessory parts or any special construction features that might have been supplied with the original order.

cincinnati fan

Form: OMM-08-0509
Effective: 5/4/09
Supersedes: OMM-08-0207
Part No.: 01231

Installation, Safety, Operation & Maintenance Instructions And Parts List

For Models HP-Series I & II, RBE, HDBI, HDAF, SQBI and SQAF

Arrangement 4 Blowers

NOTE

READ ENTIRE MANUAL INCLUDING "SECTION IV. INITIAL UNIT STARTUP" BEFORE ATTEMPTING TO INSTALL AND OPERATE THIS EQUIPMENT.

BLOWER SPECIFICATIONS

BLOWER SERIAL NUMBER: 1604671 **MFG. DATE:** 04/26/16

NOTE: The serial number above is a required reference for any assistance. It is stamped on the blower nameplate.

BLOWER SPECIFICATIONS:

Model: RBE-13 **Arrangement:** 4 **Rotation:** CW **Discharge:** TH

Wheel Size and Type: SHROUDED 100%

BLOWER PERFORMANCE DATA: (If entered on order)

CFM: 7500 **SP:** 25.000 (Inches of Water Gauge) **Motor BHP:** 54.700

Density: 0.069 **Altitude:** 1000 (Ft. above S.L.) **Airstream Temperature:** 60 °F.

Fan RPM: 3550 **Maximum Safe Fan RPM:** 3800 @ 60°F **DO NOT EXCEED THIS RPM**

MOTOR DATA: (This section is completed only if the motor was supplied by Cincinnati Fan)

HP: 60 **RPM:** 3550 **Voltage:** 190/380/50 & 230/460/60 **Phase:** 3

Hz: 60 **Frame Size:** 364TS **Enclosure:** TEFC **Efficiency:** Prem Eff

IF Motor is EXP, Class(es) & Group(s) are: _____

Manufacturers Model Number: 0602SDSR41B-P **CFV Part Number:** 37740029I

ATTENTION: RECEIVING DEPARTMENT

All Cincinnati Fan products are packaged to minimize any damage during shipment. The freight carrier is responsible for delivering all items in their original condition as received from Cincinnati Fan. The individual receiving this equipment is responsible for inspecting this unit for any obvious or concealed damage. If any damage is found, it should be noted on the bill of lading before the freight is accepted and the receiver must file a claim with the freight carrier.

LONG TERM STORAGE NOTICE

If this blower will NOT be installed and put into operation within 30 days, refer to the "Long Term Storage Instructions" on pages 12 and 13. Failure to follow all applicable long term storage instructions, will void your warranty. This blower should be stored indoors in a clean, dry location.

⚠ DANGER

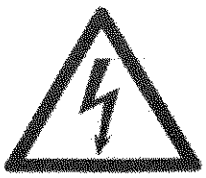

Hazardous voltage can cause electrical shock and death.

High speed rotating equipment can cause severe personal injury.

Lock out/Tag out to prevent personal injury BEFORE starting ANY service or inspection.

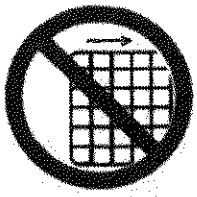

Avoid injury. NEVER operate without ALL required safety guards in place.

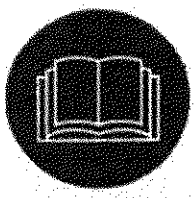

Avoid injury. You MUST read and understand all instructions in this manual BEFORE installing.

TABLE OF CONTENTS

I. GENERAL
- A. Unpacking and Handling 2
- B. Safety Accessories & Instructions 2-3

II. INSTALLATION
- A. Vibration 3
- B. Mounting Methods 3-4
- C. Duct Work Connections 4
- D. Safety Guards 4
- E. Dampers and Valves 4
- F. Set Screw & Taper-lock Bushing Torque Values 5

III. ELECTRICAL
- A. Disconnect Switches 5
- B. Motors 5-6
- C. Maximum Blower Speed 6

IV. INITIAL UNIT STARTUP
- A. Pre-Startup & Post-Startup Checks 7
- B. Vibration 8-9

V. ROUTINE INSPECTION & MAINTENANCE 9
- A. Hardware 10
- B. Motor Bearing Lubrication 10
- C. Wheel Balance 10
- D. Vibration 10
- E. Dampers and Valves 10
- F. Safety Equipment or Accessories 10-11

VI. ORDERING PARTS 11

VII. TROUBLESHOOTING 11-12

VIII. LONG TERM STORAGE 12-13

IX. WARRANTY, LIABILITY & RETURNS 14

X. PARTS DRAWING 15

I. GENERAL

A. Unpacking:

Be careful not to damage or deform any parts of the blower when removing it from the packaging container. **All the packaging material should be kept in the event the blower needs to be returned.**

Handling:

Handling of the blower should be performed by trained personnel and be consistent with all safe handling practices. Verify that all lifting equipment is in good operating condition and has the proper lifting capacity. The blower should be lifted using well-padded chains, cables or lifting straps with spreader bars. Some blower models have lifting eye locations provided in the blower base. **NEVER lift the blower by an inlet or discharge flange, motor shaft, motor eye bolt, or any other part of the blower assembly that could cause distortion of the blower assembly.**

B. Safety Instructions & Accessories:

1. **Safety Instructions:**
   All installers, operators and maintenance personnel should read AMCA Publication 410-96, **"Recommended Safety Practices for Users and Installers of Industrial and Commercial Fans"**. This manual is included with the blower. Additional copies can be requested by writing us at Cincinnati Fan, 7697 Snider Rd., Mason, OH 45040-9135
2. **Sound:**
   Some blowers can generate sound that could be hazardous to personnel. It is the responsibility of the user to measure the sound levels of the blower and/or system, determine the degree of personnel exposure, and comply with all applicable safety laws and requirements to protect personnel from excessive noise.

3. **Air Pressure and Suction:**
In addition to the normal dangers of rotating machinery, the blower can present additional hazards from the suction or pressure created at the blower inlet or discharge. Suction at the blower inlet can draw materials into the blower where they become high velocity projectiles at the discharge and cause severe personal injury or death. It can also be extremely dangerous to persons in close proximity to the inlet or discharge as the forces involved can overcome the strength of most individuals.

⚠ WARNING

NEVER OPERATE A BLOWER WITH A NON-DUCTED INLET AND/OR DISCHARGE. IF THE BLOWER INLET AND/OR DISCHARGE IS NON-DUCTED, IT IS THE USERS RESPONSIBILITY TO INSTALL AN INLET AND/OR DISCHARGE GUARD.

4. **Temperature:**
Many blowers, blower components and all motors operate at temperatures that could burn someone if they come in contact with them. If this potential hazard could exist in your installation, steps must be taken by the user to protect anyone from coming in contact with this equipment.

5. **Spark Resistance;** (Per AMCA Standard 99-0401-86 and ISO 13499)

⚠ DANGER

NO GUARANTEE OF ANY LEVEL OF SPARK RESISTANCE IS IMPLIED BY SPARK RESISTANT CONSTRUCTION. IT HAS BEEN DEMONSTRATED THAT ALUMINUM IMPELLERS RUBBING ON RUSTY STEEL CAN CAUSE HIGH INTENSITY SPARKS. AIR STREAM MATERIAL AND DEBRIS OR OTHER SYSTEM FACTORS CAN ALSO CAUSE SPARKS.

6. **Safety Accessories;**
Guards:
All moving parts must be guarded to protect personnel. Safety requirements can vary, so the number and types of guards required to meet company, local, state and OSHA regulations must be determined and specified by the actual user or operator of the equipment.

NEVER start any blower without having all required safety guards properly installed. All blowers should be checked on a regular schedule, for missing or damaged guards. If any required guards are found to be missing or defective, the power to the blower should be immediately turned off and locked out in accordance with OSHA regulations. Power to the blower should NOT be tuned back on until the required guards have been repaired or replaced.

This blower can become dangerous due to a potential "windmill" effect, even though all electrical power has been turned off or disconnected. The blower wheel should be **carefully** secured to prevent any rotational turning ***BEFORE*** working on any parts of the blower/motor assembly that could move.

7. **Access or Inspection Doors:**

⚠ DANGER

NEVER OPEN ANY ACCESS OR INSPECTION DOORS WHILE THE BLOWER IS OPERATING. SERIOUS INJURY OR DEATH COULD RESULT FROM THE AFFECTS OF AIR PRESSURE, AIR SUCTION OR MATERIAL THAT IS BEING CONVEYED. DISCONNECT OR LOCK OUT POWER TO THE BLOWER AND LET THE BLOWER WHEEL COME TO A COMPLETE STOP *BEFORE* OPENING ANY TYPE OF ACCESS OR INSPECTION DOOR.

II. INSTALLATION

A. Vibration:

Before any mounting method is selected, the user should be aware of the effects vibration will have on the blower, motor and other parts. Improper blower installation can cause excessive vibration causing premature wheel and/or motor bearing failure, that is not covered under warranty. Vibration eliminator pads, springs or bases should be properly installed to prevent any blower vibration from transmitting to the foundation, support structure or ducting.

⚠ WARNING

SHUT THE BLOWER DOWN IMMEDIATELY IF THERE IS ANY SUDDEN INCREASE IN VIBRATION.

B. Mounting Methods:

1. **Floor Mounted Units;**

Centrifugal blowers should be mounted on a flat, level, concrete foundation weighing 2-3 times the weight of the complete blower/motor assembly. It is recommended that the foundation be at least 6 inches larger than the base of the blower. The foundation should include anchor bolts such as shown in **Fig. 1** on page 4. Place the blower over the anchor bolts and shim under each bolt until the blower is level. After shimming, flat washers, lock washers and lock nuts should be tightened at each anchor bolt. Any gaps between the blower base and the foundation should be grouted. If the blower will be sitting on some type of vibration pads or mounts, follow the recommended mounting procedures supplied with the vibration elimination equipment.

Fig. 1

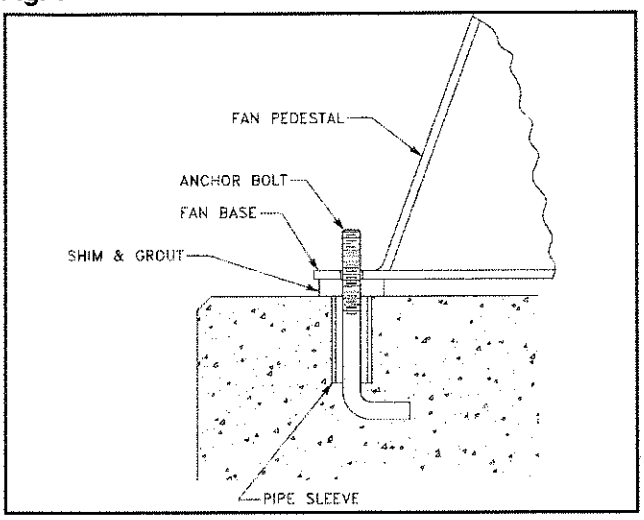

2. **Elevated Units;**

Improper mounting of elevated blowers can cause vibration problems. The structure that the blower/motor assembly will be mounted on must be strong enough to support at least 3 times the weight of the entire blower/motor assembly. **An insufficient support will cause excessive vibration and lead to premature wheel and/or motor bearing failure.** Bracing of the support structure must be sufficient enough to prevent any side sway. The entire structure should be welded at all connection joints to maintain constant alignment of the platform.

⚠ DANGER

THE IMPROPER DESIGN OF AN ELEVATED PLATFORM STRUCTURE COULD RESULT IN A RESONANT CONDITION, AND CONSEQUENTLY, CAUSE A LIFE THREATENING, CATASTROPHIC, STRUCTURAL FAILURE.

C. Duct Work Connections:

All duct connections to the blower should include flexible connectors between the ducting and the blower inlet and/or discharge. This will eliminate distortion, noise and vibration from transmitting to the duct and building. The connectors should be selected to handle the operating conditions for air volume and pressure that the blower will produce. **All ducting or accessories, added by the user, should be independently supported. DO NOT use the blower/motor assembly to support any additional weight.** Inlet and/or discharge duct elbows should be located a minimum of 2 blower wheel diameters from the blower. Any duct elbows located closer than 2 wheel diameters to the blower inlet or discharge **WILL** reduce the air performance and blower efficiency. Any duct elbows near the blower discharge should be in the **same rotational direction** as the **blower rotation**.

Non-Ducted Blower Inlet:

Any blower with no ducting on the inlet **must** have an inlet guard. The blower should be located so the blower inlet is, at least, 1 wheel diameter away from any wall or bulkhead to eliminate a reduction in air flow.

Non-Ducted Blower Discharge:

Any blower with no ducting on the discharge **must** have a discharge guard.

D. Safety Guards:

Cincinnati Fan offers guards, as optional, to keep your blower in compliance with OSHA safety regulations. These include inlet or discharge guards. Any blowers built with high temperature construction, a "heat slinger guard" is standard. It is the responsibility of the user to make sure this blower meets all local, state and OSHA safety regulations. If you have a specific guard requirement not covered by OSHA, please contact the local Cincinnati Fan sales office for assistance.

E. Dampers and Valves: (Airflow control devices)

If the blower is supplied with any type of air flow control device, it should be closed before initial start-up of the blower to minimize overloading of the motor. Any airflow control device, with bearings, should be maintained in accordance with the manufacturers instructions. Any air flow control device, with an automatic control mechanism, should be adjusted per the manufacturers recommendations.

F. Set Screw and Taper-lock Bushing Torque Values:

All blower wheel set screws are tightened to the proper torque prior to shipment. Some wheels may have taper-lock hubs and split, taper-lock bushings to secure the wheel to the motor shaft.

NOTE: Check all set screw or taper-lock bushing torques. Forces encountered during shipment, handling, rigging and temperature can affect factory settings. For correct torque values, see **Tables 1** and **2** below.

Table 1

SET SCREW TORQUE VALUES		
Diameter & Number of Treads/Inch	Hex Wrence Size (Across Flats)	Required Torque (Inch Pounds)
1/4-20	1/8"	65
5/16-18	5/32"	165
3/8-16	3/16"	228
7/16-14	7/32"	348
1/2-13	1/4"	504
5/8-11	5/16"	1104

Table 2

TORQUE VALUES FOR TAPER-LOCK BUSHINGS	
Taper-lock Bushing Size	Required Torque (Inch Pounds)
H	95
B	192
P	192
Q	350
R	350

⚠ CAUTION

Set screws should NEVER be used more than once. If the set screws are loosened, they MUST be replaced. Use only knurled, cup-point, set screws with a nylon locking patch.

III. ELECTRICAL

A. Disconnect Switches:

All blower motors should have an independent disconnect switch located in close visual proximity to turn off the electrical service to the blower motor. **Disconnects must be locked out in accordance with OSHA "lock out-tag out" procedures any time inspection or maintenance is being performed on the blower and/or motor assembly. The "lock out-tag out" procedure should be performed by a licensed electrician or authorized personnel.** All disconnects should be sized in accordance with the latest NEC codes (National Electric Codes) and any local codes and should be installed only by a licensed electrician. "Slow blow" or "time delay" fuses or breakers should be used since the initial start-up time for the blower motor, although rare, can be up to 10 seconds.

B. Motors:

⚠ DANGER

ALL WIRING CONNECTIONS, INSPECTION AND MAINTENANCE OF ANY MOTOR MUST BE PERFORMED BY A LICENSED ELECTRICIAN IN ACCORDANCE WITH THE MOTOR MANUFACTURERS RECOMMENDATIONS, ALL ELECTRICAL CODES AND OSHA REGULATIONS. FAILURE TO PROPERLY INSTALL, MAKE WIRING CONNECTIONS, INSPECT OR PERFORM ANY MAINTENANCE TO A MOTOR CAN RESULT IN MOTOR FAILURE, PROPERTY DAMAGE, EXPLOSION, ELECTRICAL SHOCK AND DEATH.

1. **DO NOT connect or operate a motor without reading the motor manufacturers instructions supplied with the blower.** The basic principle of motor maintenance is: **KEEP THE MOTOR CLEAN AND DRY.** This requires periodic inspections of the motor. The frequency of the inspections depends on the type of motor, the service and environment it will be subjected to and the motor manufacturers instructions.
2. **Cleaning:** Cleaning should be limited to exterior surfaces only. **Follow motor manufacturers cleaning instructions.**
3. **Lubrication:** Most small motors have sealed bearings that are permanently lubricated for the life of the motor. Some larger motors have grease plugs that should be replaced with grease fittings to perform re-lubrication. These motors, or any motor with grease fittings, should be lubricated in accordance with the motor manufacturers recommendations. Lubrication frequency depends on the motor horsepower, speed and service. **BE SURE** you use compatible grease and **DO NOT** over grease.
4. **Location:** If the motor will be outside and subjected to the weather, it is recommended that a weather cover be installed to keep rain and snow off of the motor. No motors are guaranteed to be "watertight". Be careful to allow enough openings between the motor and the motor cover to let the motor "breath". If the back end of the motor is covered, the cover should be no closer than 3" to the back of the motor for proper ventilation.

5. **Wiring Connections:** All wiring connections should be made for the proper voltage and phase as shown on the motor nameplate. Connections should follow the motor manufacturers recommendations as shown on the wiring schematic. This wiring diagram will be located on the outside of the motor, inside of the motor conduit box or on the motor nameplate. **Reversing some wires might be necessary to get the correct blower rotation.**
6. **Motors with Thermal Overload Protection:** If a motor is equipped with thermal overloads, the thermal overload must be wired per the wiring schematic to be operable. ***There are 3 types of thermal overloads:***
   a. **Automatic:** These will automatically shut the motor down if the internal temperature exceeds the design limits.

⚠ DANGER

MAKE SURE YOU LOCK OUT THE POWER TO THE MOTOR BEFORE INSPECTING ANY MOTOR WITH AUTOMATIC THERMALS. WHEN THE THERMALS COOL DOWN, THEY WILL ALLOW THE MOTOR TO AUTOMATICALLY START UP AGAIN, UNLESS YOU HAVE LOCKED OUT THE POWER TO THE MOTOR.

   b. **Manual:** These motors will have a button on them. If the motor overheats, it will shut down. After you have inspected the motor and eliminated the over heating problem, you will need to "reset" it by pushing the button. **You should still lock out the power BEFORE inspecting the motor.**
   c. **Thermostats:** This type of thermal is a temperature sensing device **ONLY**. If the motor overheats, the thermostats will open or close (depending on the type) and send a **"signal"** to the electrical box. ***THEY WILL NOT TURN THE MOTOR OFF.*** **These are pilot circuit devices that must be connected to the magnetic starter circuit.**

7. **EXPLOSION PROOF Motors:** No motor is explosion proof. Explosion proof (EXP) motors are designed so if there is an explosion **WITHIN** the motor, the explosion will be **CONTAINED INSIDE** the motor and not allowed to get out to the atmosphere. All explosion proof motors must be selected based on the atmosphere and/or the environment the motor will be operating in. Explosion proof motors are designed, rated, and labeled for their operating conditions based on Classes, Groups and "T" Codes. **The Class, Group and "T" Code of an EXP motor MUST be selected based on the atmosphere and/or environmental conditions the motor will be operating in. Consult the NEC (National Electric Code) and the NFPA (National Fire Protection Association) for the proper EXP motor Class, Group and "T" Code required for your specific application and location.**

⚠ DANGER

IF AN EXPLOSION PROOF MOTOR IS USED IN AN AREA CONTAINING VOLITILE LIQUIDS, GASES, FUMES OR DUST FOR WHICH THE MOTOR WAS NOT DESIGNED TO OPERATE IN, AN EXPLOSION AND/OR FIRE CAN OCCUR.

NOTICE:
   a. **All EXP motors have some type of thermal overload as required by UL (Underwriters Laboratories). Refer to all of Section 6 above.**
   b. **All EXP motors are required to have the UL (Underwriters Laboratories) and CSA (Canadian Standards Association) listing numbers on the motor name plate or on a separate plate attached to the motor. The Class, Group and "T" Code the motor is designed for must also be listed.**

8. **Normal Motor Operating Temperatures:**
   Using your hand to test the normal running temperature of a motor can be a very painful experience;
   The normal operating temperature of a fully loaded, open type, electric motor operating in a 70°F. (21° C.) ambient temperature is 174°F. (79° C.)

C. Maximum Blower Speed and Motor Speed Controllers:

If you will be using any type of motor speed controller with this blower, **DO NOT** exceed the **maximum safe blower speed.** Installing and using a speed control device requires special training and certification as required by the speed control manufacturer. See the manufacturers instructions for proper use, installation and wiring connections for the maximum speed settings. It may also be necessary to "block out" some speeds to eliminate a resonant vibration problem. The maximum safe blower speed is shown on the data sheet shipped with the blower. If you have lost the data sheet, contact Cincinnati Fan or our sales office for your area. You must have the serial number from the **blower** name plate for us to determine the maximum safe blower speed. Cincinnati Fan will only extend the motor manufacturers warranty, when used with a speed controlling device, if the motor has the words **"Inverter Duty"** marked on the motor name plate. If the motor does not have **"Inverter Duty"** marked on the motor name plate, and you have a motor failure, you will be required to contact the motor manufacturer for any service or warranty claims.

IV. INITIAL UNIT STARTUP

NOTICE: Failure to complete and document all the following pre-startup and both post-startup checks, listed in sections A (below) and B on page 8, could void all warranties.

A. Pre-Startup & Post-Startup Checks: (Check blocks as each step is completed. Retain this for your records.)

A1. Pre-Startup Checks Completed By: _____ **DATE:** _____

A2. 8 Hour, Post-Startup Checks Completed By: _____ **DATE:** _____

A3. 3 Day, Post-Startup Checks Completed By: _____ **DATE:** _____

MAKE SURE POWER TO THE MOTOR IS LOCKED OUT BEFORE STARTING PRE-STARTUP OR POST-STARTUP CHECKS.

1. ☐☐☐ If possible, *CAREFULLY* spin the blower wheel by hand to ensure it rotates freely and no rubbing or clicking noise is heard.
2. ☐☐☐ Check all blower, foundation and duct work hardware to make sure it is tight.
3. ☐☐☐ Check all blower wheel set screws to make sure they are tight per **Table 1** on page 5.
4. ☐☐☐ If the wheel has a taper-lock bushing, make sure the bolts are tightened per **Table 2** on page 5.
5. ☐☐☐ Make certain there is no foreign material in the blower or duct work that can become a projectile.
6. ☐☐☐ Make sure any inspection doors in the duct work are securely bolted or locked.
7. ☐☐☐ Ensure all electrical power components are properly sized and matched for your electrical system.
8. ☐☐☐ Check that all required guards are properly secured.
9. ☐☐☐ Any dampers should be fully opened and closed to make sure there is no binding or interference.
10. ☐☐☐ If your blower is mounted on an elevated support structure, make sure the structure is welded at all the joint connections and the structure is properly braced to prevent "side sway".
11. ☐☐☐ Close any dampers to minimize load on motor. Especially on blowers with high temperature construction. **Never** subject a "cold" blower to a "hot" gas stream. If the blower will be handling "hot gases" greater than 150°F (65°C) it is imperative that the blower be subjected to a gradual rate of temperature increase, not to exceed 15°F/minute (8°C/minute). The same temperature limits are also important when the blower is experiencing a drop in temperature until the temperature drops down to 150°F (65°C). Only, when the entire blower has reached an equilibrium temperature of 150°F (65°C), or less, should the power be turned off.
12. ☐☐☐ Make sure the power source connections to the blower motor are per the motor manufacturers instructions.
13. ☐☐☐ Make sure the blower wheel is stationary prior to startup. **Starting a blower with a wheel that is rotating backwards can cause wheel damage.**
14. ☐☐☐ Apply power to the blower motor momentarily (i.e. "bump start") to check for proper blower wheel rotation. If the blower is rotating in the wrong direction, reconnect the motor leads per the motor manufacturers wiring schematic. **Blower rotation is determined by viewing the blower from the motor side of the blower, NOT from the inlet side.** After reconnecting the leads, repeat this step. **See Fig. 2 below.**

Fig. 2

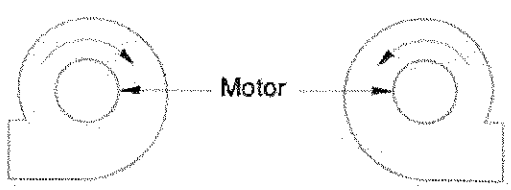

Clockwise (CW) Rotation — **Counter-Clockwise (CCW) Rotation**

15. ☐☐☐ Apply power to the blower motor and let it come up to full speed. **Turn off the power.** Look and listen for any unusual noise or mechanical abnormality while the blower wheel is still spinning. If any are noticed, lock out the power, wait for the blower wheel to come to a complete stop, locate the cause and correct it.
16. ☐☐☐ Unlock power and start the blower.
17. ☐☐☐ Measure, record and keep the following motor data for future reference and comparison:
(Single phase motors will only have L1 and L2 leads)

Amperage draw on each motor lead: L1 _____ **L2** _____ **L3** _____
(Running amps **SHOULD NOT** exceed the motor nameplate amps for the voltage being operated on)

Voltage coming to motor leads: L1_____ **L2**_____ **L3**_____
(Should be about the same input voltage on all leads)

B. Vibration:

The blower was balanced at the factory to comply with ANSI/AMCA Standard 204-05, Category BV-3. However, rough handling in shipment and/or erection, weak and/or non-rigid foundations, and misalignment may cause a vibration problem after installation. After installation, the vibration levels should be checked by personnel experienced with vibration analysis and vibration analysis equipment.

NOTE:

The blower SHOULD NOT be operated if the vibration velocity of the fan exceeds 0.40 inches per second, filter out, if the blower is rigidly mounted. If the blower is mounted on isolators or on an isolator base, it SHOULD NOT be operated if the vibration velocity of the blower exceeds 0.65 inches per second, filter out.

Vibration readings for direct driven blowers should be taken on the motor at the top, sides and end as per **Fig. 3** below. After you have taken your vibration readings, write them down in the spaces below and keep for future comparison.

⚠ DANGER

If the blower is going to be conveying material, it is the users responsibility to periodically turn the blower off and lock out the power. The blower wheel should then be checked for material build-up and/or erosion. If material has built up on any parts of the wheel, it MUST be removed and cleaned before it is put back into service. If any parts of the wheel have been eroded, the wheel MUST be replaced. Failure to perform this inspection can cause excessive vibration that will damage the blower and/or motor bearings. When vibration becomes excessive, it will lead to complete blower failure that could cause property damage, severe personal injury and death. The user must determine the frequency of this inspection based on the actual circumstances of their operation, BUT checking the vibration readings should NEVER exceed a 12 month period. For the AMCA/ANSI standard for vibration limits, see Fig. 4 on page 9.

Fig. 3

VIBRATION METER PROBE POSITIONS

For Arrangement 4 Blowers

	1	2	3	4	5
A					
B					
C					

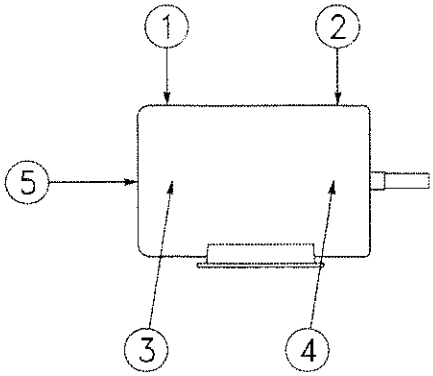

A Pre-Startup ..... Readings taken by: _____ Date: _____

B 8 Hour Post-Startup ..... Readings taken by: _____ Date: _____

C 3 Day Post-Startup ..... Readings taken by: _____ Date: _____

Fig. 4 Vibration Severity Chart

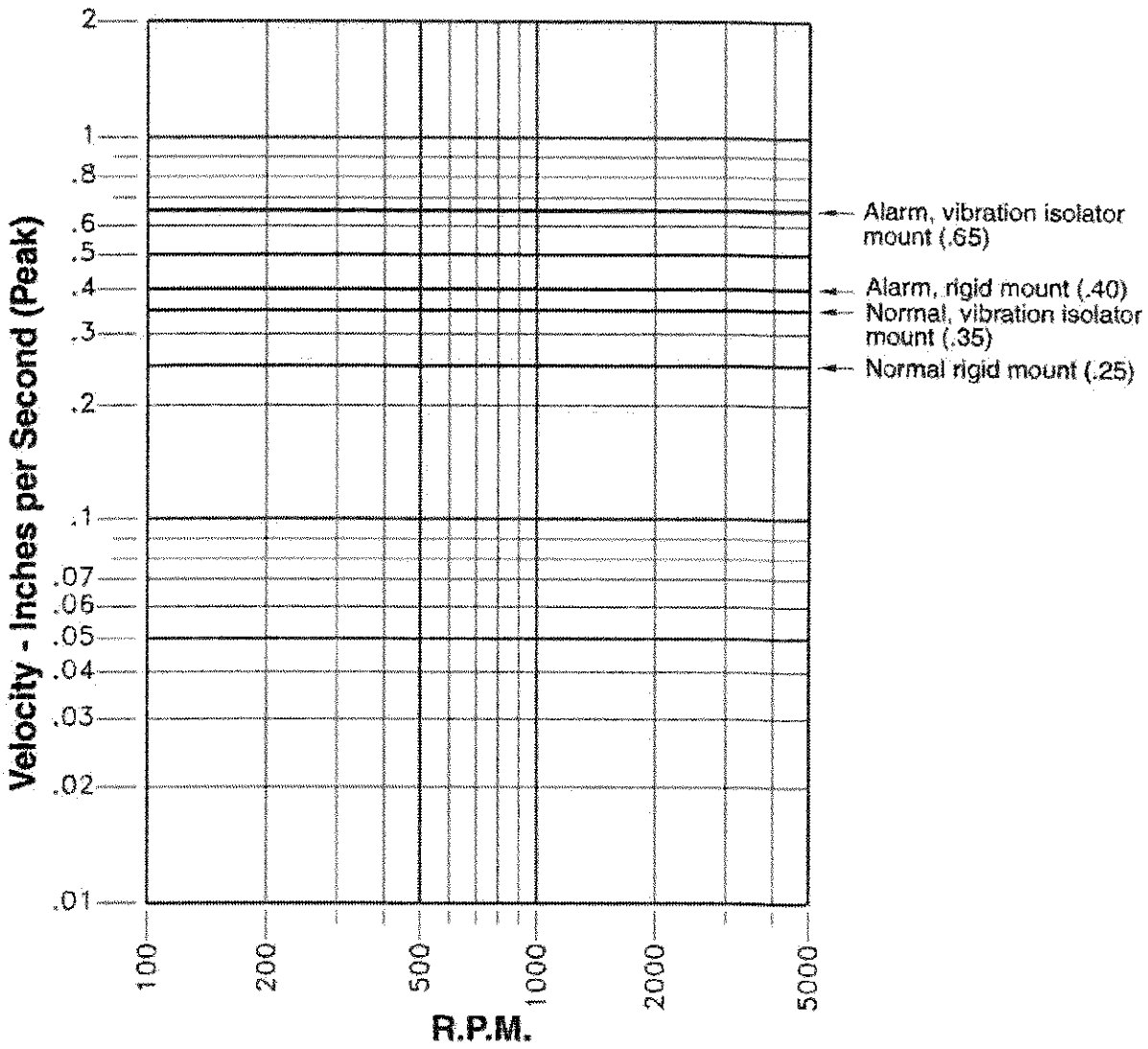

V. ROUTINE INSPECTION & MAINTENANCE

Periodic inspection of all the blower parts is the key to good maintenance and trouble-free operation. The frequency of inspections must be determined by the user and is dependent upon the severity of the application. **BUT**, it should **NEVER** exceed a 12 month period. The user should prepare an inspection and maintenance schedule and make sure it is adhered to.

⚠ WARNING

BEFORE STARTING ANY INSPECTION OR MAINTENANCE, BE SURE BLOWER IS TURNED OFF, POWER IS LOCKED OUT AND THE BLOWER WHEEL HAS BEEN CAREFULLY SECURED TO PREVENT WIND MILLING. IF THE OPERATING CONDITIONS OF THE BLOWER ARE TO BE CHANGED (SPEED, PRESSURE, TEMPERATURE, ETC.) CONSULT CINCINNATI FAN, OR OUR SALES OFFICE FOR YOUR TERRITORY, TO DETERMINE IF THE UNIT WILL OPERATE SAFELY AT THE NEW CONDITIONS.

A. Hardware:

All blower and foundation hardware should be checked to make sure it is tight. Wheel set screws or taper-lock bushings should be tightened to the torque values shown in **Tables 1 and 2** on page 5.

NOTE: If any set screws have come loose, they must be thrown away and replaced. **NEVER** use set screws more than once. **Replace with knurled, cup-point set screws with a nylon locking patch.**

B. Motor Bearing Lubrication:

Most smaller motors have sealed bearings that never require re-lubrication for the life of the motor. For any motors with grease fittings, consult the motor manufacturers recommendations with reference to the lubrication frequency and the type of grease that should be used.

DO NOT over grease the motor bearings. Generally, 1-2 shots should be enough. Use a hand operated grease gun at no more than 40 PSI. ***IF POSSIBLE, CAREFULLY* lubricate the motor bearings while the motor is running.**

C. Wheel Balance:

All blower wheels are balanced at the factory. It is not uncommon that additional "trim balancing" is required after the blower is assembled. Trim balancing of the blower assembly, in the field, is typically always necessary for all replacement wheels. **After any wheel is installed, the final balance of the entire blower assembly should be checked.** Refer to **Section B** on page 8 and **Fig. 4** on page 9. Air stream material or chemicals can cause abrasion or corrosion of the blower parts. This wear is generally uneven and, over time, will lead to the wheel becoming unbalanced, causing excessive vibration. When that happens, the wheel must be rebalanced or replaced. The other air stream components should also be inspected for wear or structural damage and cleaned or replaced if necessary. **After cleaning any blower wheel, it should be balanced and then "trim balanced" on the motor shaft.**

There are two ways to balance a blower wheel:

1. **Add balancing weights for fabricated aluminum, steel or stainless steel wheels:**
   Balance weights should be rigidly attached to the wheel at a location that will not interfere with the blower housing nor disrupt air flow. They should (if at all possible) be welded to the wheel. When trim balancing the wheel, **on the blower,** be sure to ground the welder **directly** to the blower wheel. Otherwise, the welding current will likely pass through the motor and damage the motor bearings.
2. **Grinding off material for cast aluminum wheels: (on some models only)**
   If you are grinding on the wheel to remove material, be very careful not to grind too much in one area. That could affect the structural integrity of the wheel.

   NOTE:
   Removing any Backward Inclined or Airfoil wheel from the blower to clean it, requires special attention when reinstalling the wheel back into the blower housing. Make sure you reinstall the wheel so the proper wheel-to-inlet clearance is maintained. Failure to do this will affect the blowers airflow (CFM), static pressure (SP) capabilities and efficiency. Consult Cincinnati Fan or our local sales office for your area for assistance if necessary.

D. Vibration:

As mentioned previously in this manual, excessive vibration can cause premature motor bearing failure that could lead to catastrophic failure of the blower. After performing any routine maintenance, the vibration readings should be taken again. New readings should be taken (maximum every 12 months) and compared to the readings you recorded in **Figure 3**, on page 8, during the initial startup. **If any major differences are present, the cause should be determined and corrected before the blower is put back into operation.**

The most common causes of vibration problems are:

1. Wheel unbalance.
2. Mechanical looseness.
3. Poor blower inlet and/or discharge conditions.
4. Foundation stiffness.

E. Dampers and Valves: (Airflow control devices)

Turn off and lock out power to the blower motor. Any dampers or valves should be periodically inspected to make sure all parts are still operable within their full range and there is no interference with any other damper or blower components. Any bearings or seals should be checked for their proper function. The manufacturers maintenance instructions should be followed.

F. Safety Equipment & Accessories:

It is the users responsibility to make sure that all safety guards required by the company, local, state and OSHA regulations are properly attached and fully functional at all times. If any guards become defective or non-functional at any time, **the power to the blower MUST be turned off and locked out** until complete repairs and/or replacements have been made, installed and inspected by authorized personnel.

Any accessories used in conjunction with the blower should also be inspected to make sure they are functioning within their intended limits and design specifications. The manufacturers maintenance manuals should be referred to for correct maintenance procedures. These accessories include, but are not limited to, the following:
Shaft seals, inspection doors, vibration isolators or vibration bases, air flow or pressure measuring equipment, hoods, controls, special coatings, silencers, expansion joints, valves, flexible connectors and filters.

VI. ORDERING REPLACEMENT PARTS:

Under normal conditions, you should not need any spare or replacement parts for at least 24 months after shipment from Cincinnati Fan. That does not include any wear due to abrasion, corrosion, excessive temperatures, abuse, misuse, accident or any severe conditions the fan was not designed for.

NOTICE:

1. **If this blower is vital to any process that could cost you lost revenue, we strongly recommend that you keep a replacement blower wheel and motor at your location.**

2. **If this blower is vital for the safety of any people and/or animals, we strongly recommend that you keep a complete blower/motor assembly, as originally ordered, at your location.**

To order any parts or complete units, contact us for the name of our sales office for your area. Or you can find them on our website at: **www.cincinnatifan.com**

WE MUST HAVE THE BLOWER SERIAL NUMBER FROM THE BLOWER NAME PLATE TO IDENTIFY PARTS CORRECTLY.

VII. TROUBLESHOOTING

⚠ DANGER

Troubleshooting should only be performed by trained personnel. Any potential electrical problems should only be checked by a licensed electrician. All safety rules, regulations and procedures MUST be followed. Failure to follow proper procedures can cause property damage, severe bodily injury and death.

Potential problems and causes listed below are in no order of importance or priority. The causes are only a list of the most common items to check to correct a problem. If you find the cause of a problem, **DO NOT** assume it is the **ONLY** cause of that problem. Different problems can have the same causes.

PROBLEM	CAUSE
Excessive Vibration	1. Loose mounting bolts, wheel set screws, taper-lock hubs. 2. Worn or corroded blower wheel. 3. Accumulation of foreign material on blower wheel. 4. Bent motor shaft. 5. Worn motor bearings. 6. Motor out of balance. 7. Inadequate structural support. 8. Support structure not sufficiently cross braced. 9. Weak or resonant foundation. 10. Foundation not flat and level.
Airflow (CFM) Too Low	1. Blower wheel turning in wrong direction (**rotation**). 2. Actual system static pressure (**SP**) is higher than expected. 3. Motor speed (**RPM**) too low. 4. Dampers or valves not adjusted properly. 5. Leaks or obstructions in duct work. 6. Filters dirty. 7. Inlet and/or discharge guards are clogged. 8. Duct elbow too close to blower inlet and/or discharge. 9. Improperly designed duct work 10. Blower wheel not properly located relative to the inlet bell (Models **HDBI, HDAF, SQBI** and **SQAF** only).
Airflow (CFM) Too High	1. Actual system static pressure (**SP**) is lower than expected. 2. Motor speed (**RPM**) too high. 3. Filter not in place. 4. Dampers or valves not adjusted properly.

PROBLEM	CAUSE
Motor Overheating	**NOTE: A normal motor will operate at 174°F. See B-8 on page 6.** 1. Actual system static pressure **(SP)** is lower than expected. 2. Voltage supplied to motor is too high or too low. 3. Motor speed (**RPM**) too high or defective motor. 4. Air density higher than expected. 5. Motor wired incorrectly or loose wiring connections. 6. Cooling fan cover on back of motor is clogged. (Fan cooled motors only.)
Excessive Noise	1. Wheel rubbing inside of housing. 2. Worn or corroded blower wheel. 3. Accumulation of foreign material on blower wheel. 4. Loose mounting bolts, wheel set screws, or taper-lock hubs. 5. Bent motor shaft. 6. Worn motor bearings. 7. Motor out of balance. 8. Motor bearings need lubrication. 9. Vibration originating elsewhere in system. 10. System resonance or pulsation. 11. Inadequate or faulty design of blower support structure. 12. Blower operating near "stall" condition due to incorrect system design or installation.
Fan Doesn't Operate	1. Motor wired incorrectly. 2. Incorrect voltage supply. 3. Defective fuses or circuit breakers. 4. Power turned off elsewhere. 5. Motor wired incorrectly or loose wiring connections. 6. Defective motor.

VIII. LONG TERM STORAGE INSTRUCTIONS: (Storage exceeding 30 days after receipt of equipment)

NOTE: Failure to adhere to these instructions voids all warranties in their entirety.

1. Storage site selection:
   a. Level, well-drained, firm surface, in clean, dry and warm location. Minimum temperature of 50°F (10°C).
   b. Isolated from possibility of physical damage from construction vehicles, erection equipment, etc.
   c. Accessible for periodical inspection and maintenance.
2. The blower should be supported under each corner of its base to allow it to "breath". Supports (2 x 4's, timbers, or railroad ties) should be placed diagonally under each corner.
3. If the equipment is to be stored for more than three (3) months, the entire blower assembly must be loosely covered with plastic, **but not tightly wrapped**.
4. Storage Maintenance:

   A periodic inspection and maintenance log, by date and action taken, must be developed and maintained for each blower. See example below. Each item must be checked monthly.

EXAMPLE:

Storage / Maintenance Schedule Log

ITEM	ACTION	DATES CHECKED
1	Re-inspect units to insure any protective devices used are functioning properly. Check for scratches in the finish which will allow corrosion or rust to form.	
2	Rotate wheel a minimum of 10 full revolutions to keep the motor bearing grease from separating and drying out. ***This is a critical step.***	

Long Term Storage instructions continued on page 13.

5. General Motor Procedure:

   If the motor is not put into service immediately, the motor must be stored in a clean, dry, warm location. Minimum temperature of 50°F. (10°C,). Several precautionary steps must be performed to avoid motor damage during storage.

   a. Use a "Megger" each month to ensure that integrity of the winding insulation has been maintained. Record the Megger readings. Immediately investigate any significant drop in insulation resistance.
   b. **DO NOT** lubricate the motor bearings during storage. Motor bearings are packed with grease at the factory.
   c. If the storage location is damp or humid, the motor windings **must** be protected from moisture. This can be done by applying power to the motor's space heaters, (IF AVAILABLE) while the motor is in storage. If the motor does not have space heaters, storing it in a damp or humid location will, very quickly, cause internal corrosion and motor failure which is not warranted.

   ***NOTE*:**
   For specific storage instructions, for the <u>actual</u> motor and any accessory parts that were supplied, refer to the manufacturer's instructions.

IX. LIMITED WARRANTY:

Cincinnati Fan & Ventilator Company (Seller) warrants products of its own manufacture, against defects of material and workmanship under normal use and service for a period of eighteen (18) months from date of shipment or twelve (12) months from date of installation, whichever occurs first. This warranty does not apply to any of Seller's products or any part thereof which has been subject to extraordinary wear and tear, improper installation, accident, abuse, misuse, overloading, negligence or alteration. This warranty does not cover systems or materials not of Seller's manufacture. On products furnished by Seller, but manufactured by others, such as motors, Seller extends the same warranty as Seller received from the manufacturer thereof. Expenses incurred by Purchaser's in repairing or replacing any defective product will not be allowed except where authorized in writing and signed by an officer of the Seller.

The obligation of the Seller under this warranty shall be limited to repairing or replacing F.O.B. the Seller's plant, or allowing credit at Seller's option. **THIS WARRANTY IS EXPRESSLY IN LIEU OF ALL OTHER WARRANTIES EITHER EXPRESSED OR IMPLIED INCLUDING THE WARRANTIES OF MERCHANTABILITY AND FITNESS FOR A PARTICULAR PURPOSE AND OF ALL OTHER OBLIGATIONS AND LIABILITIES OF THE SELLER. THE PURCHASER ACKNOWLEDGES THAT NO OTHER REPRESENTATIONS WERE MADE TO PURCHASER OR RELIED UPON BY PURCHASER WITH RESPECT TO THE QUALITY OR FUNCTION OF THE PRODUCTS HEREIN SOLD.**

Removal of the Sellers nameplate or any generic fan nameplate containing the fan serial number voids all warranties, either written or implied. Failure to complete and document all the pre-startup and post startup checks and perform the suggested routine maintenance checks voids all warranties, either written or implied.

LIMITATION OF LIABILITY:

Notice of any claim, including a claim for defect in material or workmanship, must be given to Seller in writing within 30 days after receipt of the equipment or other products. Seller reserves the right to inspect any alleged defect at Purchaser's facility before any claim can be allowed and before adjustment, credit, allowance replacement or return will be authorized. See **RETURNS** below. Seller's liability with respect to such defects will be limited to the replacement, free of charge, of parts returned at Purchaser's expense F.O.B. Seller's plant and found to be defective by the Seller.

IN NO EVENT WILL SELLER BE LIABLE FOR SPECIAL, INDIRECT, INCIDENTAL OR CONSEQUENTIAL DAMAGES, WHETHER IN CONTACT, TORT, NEGLIGENCE, STRICT LIABILITY OR OTHERWISE, INCLUDING WITHOUT LIMITATION DAMAGES FOR INJURY TO PERSONS OR PROPERTY, LOST PROFITS OR REVENUE, LOST SALES OR LOSS OF USE OF ANY PRODUCT SOLD HEREUNDER. PURCHASER'S SOLE AND EXCLUSIVE REMEDY AGAINST SELLER WILL BE THE REPLACEMENT OF DEFECTIVE PARTS AS PROVIDED HEREIN OR REFUND OF THE PURCHASE PRICE FOR DEFECTIVE PRODUCTS, AT SELLER'S SOLE OPTION. SELLER'S LIABILITY ON ANY CLAIM, WHETHER IN CONTRACT, TORT, NEGLIGENCE, STRICT LIABILITY OR OTHERWISE, FOR ANY LOSS OR DAMAGE ARISING OUT OF OR IN CONNECTION WITH PURCHASER'S ORDER OR THE PRODUCTS OR EQUIPMENT PURCHASED HEREUNDER, SHALL IN NO CASE EXCEED THE PURCHASE PRICE OF THE EQUIPMENT GIVING RISE TO THE CLAIM.

RESPONSIBILITY:

It is the understanding of the Seller that Purchaser and/or User will use this equipment in conjunction with additional equipment or accessories to comply with all Federal, State and local regulations. The Seller assumes no responsibility for the Purchaser's or Users compliance with any Federal, State and local regulations.

RETURNS:

Cincinnati Fan & Ventilator Company assumes no responsibility for any material returned to our plant without our permission. An **RMA** (Return Material Authorization) number must be obtained and clearly shown on the outside of the carton or crate and on a packing slip. Any items returned must be shipped freight prepaid. Failure to comply will result in refusal of the shipment at our receiving department.

DISCLAIMER

This manual, and all its content herein, is based on all applicable known material at the time this manual was created. **Any parts of this manual are subject to change at any time and without notice.**

If any statements, diagrams and/or instructions contained herein, **for components not manufactured by the Seller,** conflict with instructions in the manufacturer's manual (i.e.: motors, dampers, etc.), the instructions in the manufacturer's manual, for that component take precedent.

Should you want the latest version of this manual, please contact us or our sales office for your area. Or, you can print a current version by going to our website at: **www.cincinnatifan.com**

cincinnati fan

7697 Snider Road, Mason, OH 45040-9135
Phone: (513) 573-0600 Fax: (513) 573-0640
E-Mail: sales@cincinnatifan.com

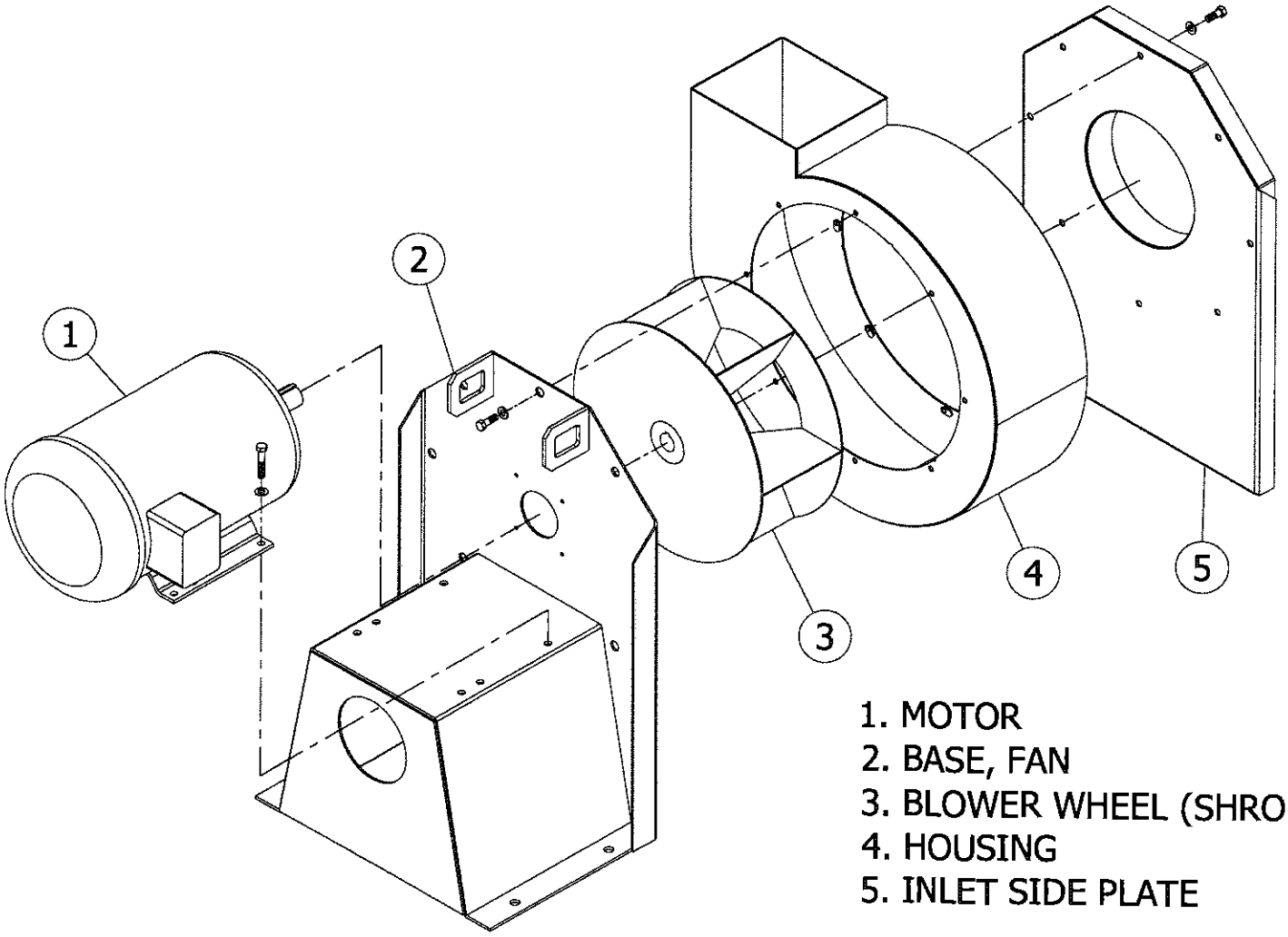

1. MOTOR
2. BASE, FAN
3. BLOWER WHEEL (SHROUDED)
4. HOUSING
5. INLET SIDE PLATE

RBE ARRANGEMENT 4 SHROUDED WHEEL

The drawing shown above is a representation of the basic model blower or fan purchased on the serial number shown on page 1. It does not include any optional or accessory parts or any special construction features that might have been supplied with the original order.

J&D Manufacturing

ES SHUTTER FAN

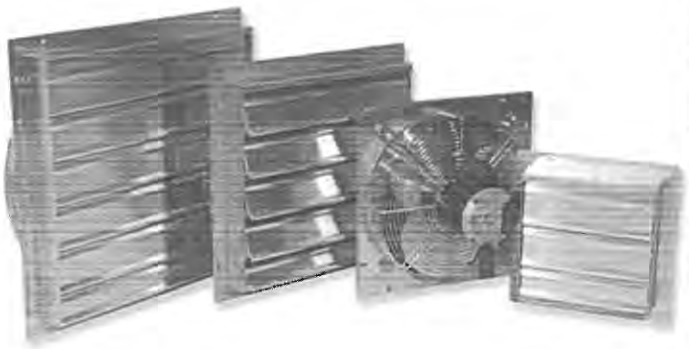

WARRANTY

J&D Manufacturing warrants all products are free from defects in materials and workmanship under normal use for the period of one year from date of purchase. Our warranty does not cover normal or regular wear and tear. J&D Manufacturing can repair or replace at our option, any product or part of the product that is found to be defective. Our warranty applies to materials only, and does not include return freight, delivery, loss or damage to personal property, cost of removal or installation, any incidental or consequential damages or labor. This warranty does not apply to products which are misused, abused, altered, improperly installed or subject to negligence. All warranties must be approved through our warranty department. The original purchaser must present a copy of the invoice for the defective product. One year is our standard warranty unless specified on our literature or in the installation instructions or user manuals.

RECOMMENDED TOOLS FOR INSTALLATION (NOT PROVIDED)

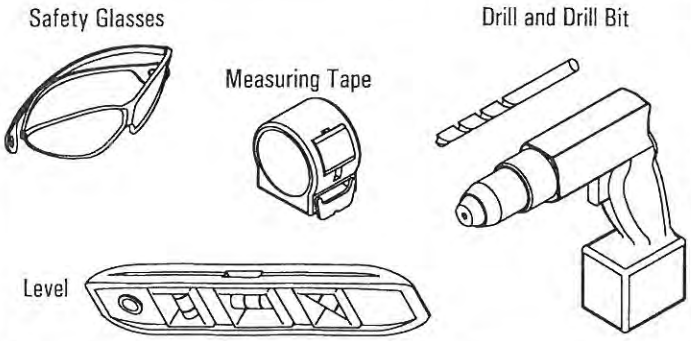

INSTALLATION HARDWARE IS NOT PROVIDED

Use appropriate fasteners and washers for your structure.

PRODUCT LEGEND

SIDE VIEW

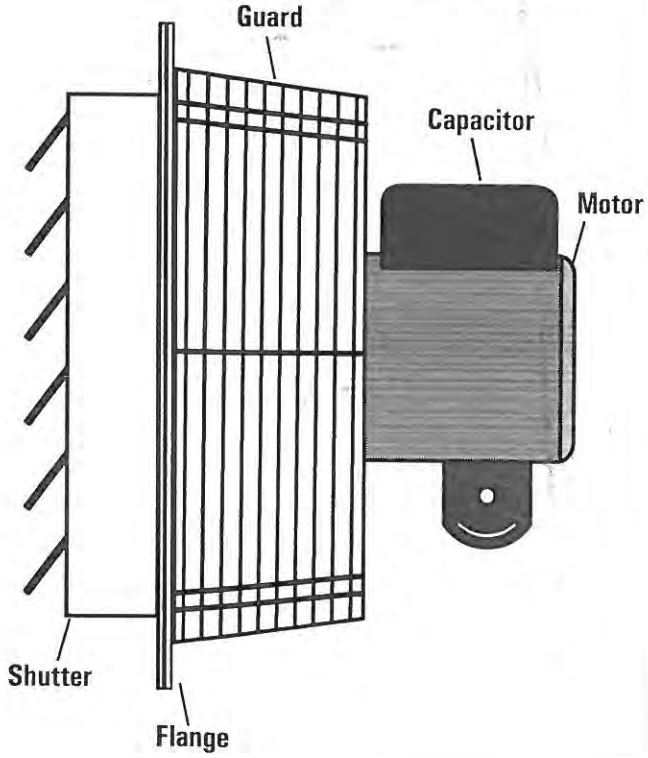

BACK VIEW

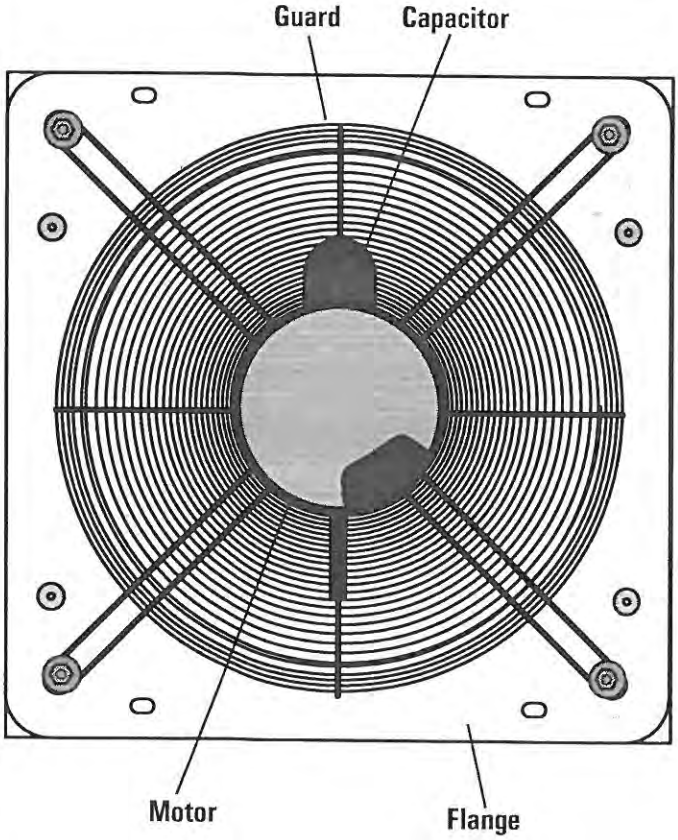

INSTALLATION

Please read over all instructions carefully before you begin. If you have any questions please call your local dealer, or contact J&D Manufacturing at 1-800-998-2398.

STANDARD INSTALLATION

This is the preferred method of installation. If the wall you are using is exceptionally thick, or if you wish to have the shutter mounted to the outside of your building, the ALTERNATE INSTALLATION may be used.

1

Construct a structurally sound rough opening for your fan.

Fan Size	Height	Width
10"	12½"	12½"
12"	12½"	12½"
16"	16½"	16½"
20"	20½"	20½"
24"	24½"	24½"
30"	30½"	30½"

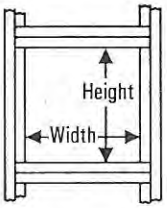

2

Insert exhaust fan shutter into finished opening making sure that shutter can move freely. Exhaust fan must be mounted with the motor inside of structure, protected from the weather, and with capacitor on top as shown.

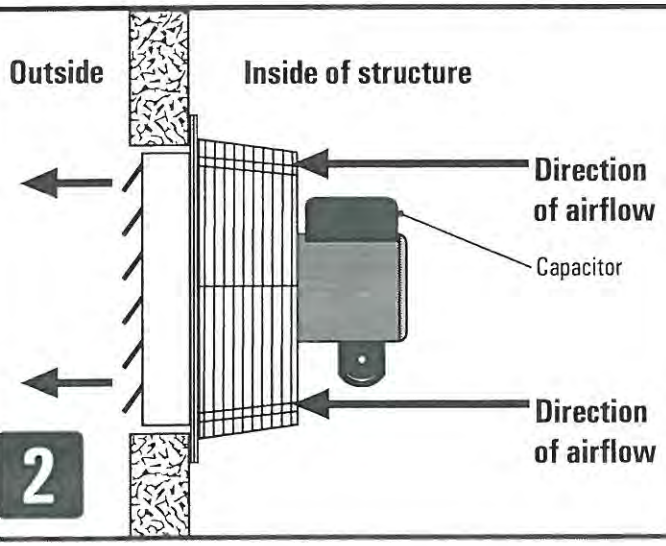

3

Using appropriate hardware (not provided) for your structure and the weight of your exhaust fan, secure the fan to your structure using the (4) pre-drilled holes on the flange.

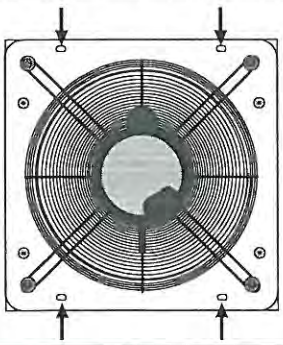

POWERING UNIT

The ES Shutter fan is available with or without a pre-wired cord. If the model you purchased includes an attached cord, proceed to step 4a for instructions on powering your fan. If you purchased a model without a cord, proceed to step 4b for wiring instructions.

4a

- Plug cord into 115 AC grounded outlet that meets national, regional and local codes.
- Route electrical cord from motor to outlet with drip loop. Drip loop will drain accumulated moisture away from the motor and outlet.
- Only permit power to unit when shutter and guard is fully installed to prevent injury.

Separate variable speed control is required to adjust fan speed. Contact your dealer for more information.

4b

ALL ELECTRICAL WORK SHOULD BE COMPLETED BY QUALIFIED PERSONNEL AND MEET NATIONAL, REGIONAL AND LOCAL CODES.

- Install manual disconnect switch inside building adjacent to fan per national, regional,and local electrical codes.
- Route wire to motor with drip loop and secure. Drip loop will drain accumulated moisture away from the motor.
- Configure internal wires to match supply voltage and wire according to motor nameplate. Test to verify correct rotation.
- Only permit power to unit when shutter and guard is fully installed to prevent injury.

Separate variable speed control is required to adjust fan speed. Contact your dealer for more information.

MAINTENANCE INSTRUCTIONS

- Disconnect power before cleaning or maintaining your fan in order to prevent serious injury or death.
- Service and repair of fan should only be completed by a qualified technician.
- For maximum efficiency and fan life, keep the following free from dirt and dust:
  - blades
  - housing
  - shutters
  - motor
  - guard
- The totally enclosed air over motor has sealed ball bearings and does not require additional lubrication.

ALTERNATE INSTALLATION

The STANDARD INSTALLATION method is the preferred method. If the wall you are using to mount your exhaust fan is exceptionally thick, or if you wish to have the shutter mounted to the outside of your building, the ALTERNATE INSTALLATION method may be used.

1 Construct a rough opening using dimensions listed in step 1 of STANDARD INSTALLATION

Separate the shutter from the assembled fan by drilling out the 4 rivets that hold the shutter to the flange as shown below.

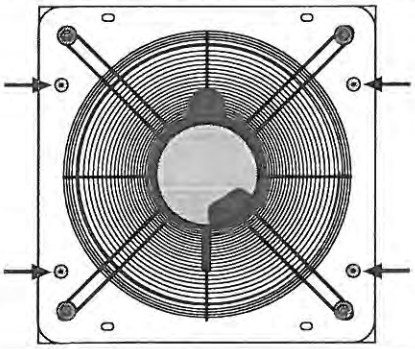

2

Using appropriate hardware (not provided) for your structure and the weight of your exhaust fan, secure the fan to your structure using the (8) pre-drilled holes on the flange. Exhaust fan must be mounted with the motor inside of structure, protected from the weather, and with capacitor on top as shown.

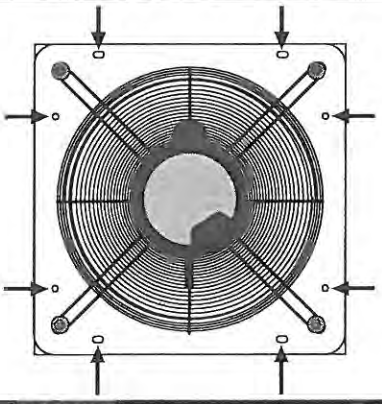

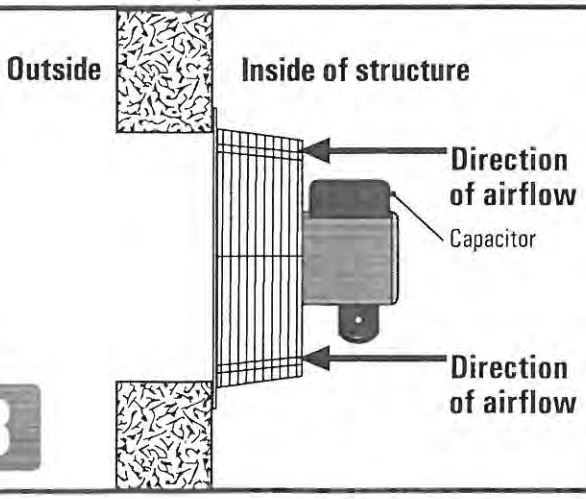

3

Using appropriate hardware (not provided) for your structure and the weight of the shutter, secure the shutter to the outside of your structure using the (8) pre-drilled holes on the flange. Louvers should open to the outside.

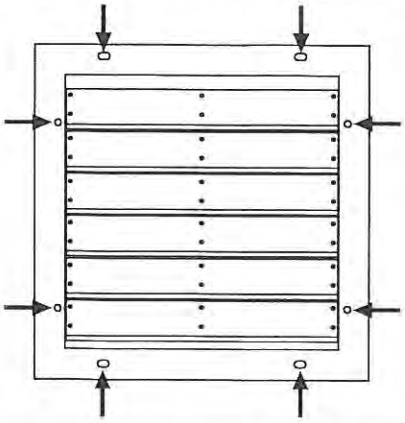

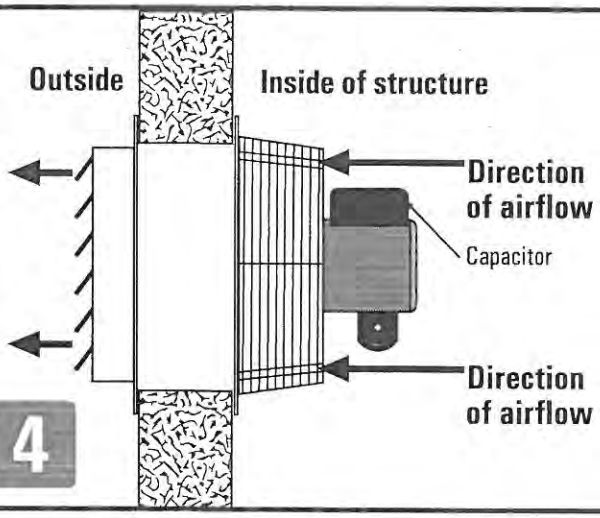

4

5 Refer to step 4 of STANDARD INSTALLATION for instructions on how to power your exhuast fan.

MAINTENANCE INSTRUCTIONS

- Disconnect power before cleaning or maintaining your fan in order to prevent serious injury or death.
- Service and repair of fan should only be completed by a qualified technician.
- For maximum efficiency and fan life, keep the following free from dirt and dust: blades, housing, shutters, motor, and guard
- The totally enclosed air over motor has sealed ball bearings and does not require additional lubrication.

J&D Manufacturing

6200 Hwy 12 • Eau Claire, WI 54701 • 1-800-998-2398

Visit our website at www.jdmfg.com

Central Power Systems & Services

Provider of:

MTU Onsite Energy

Engineering Data and Proposal
This proposal has been prepared specifically for:

Meramec Caverns

It contains all the necessary literature, drawings and component information for the following equipment:

DS50 Diesel Generator Set
&
Automatic Transfer Switch

Contact:
Mark Wittich
Office: 314.427.4911
Cell: 314.623.1696
Email: Mark.Wittich@cpower.com

			Pages
1	**Generator Specification Sheets**		
	1	Bill of Materials	3 - 3
	2	Start-Up Validation Form	4 - 4
	3	Model DS50 Generator Spec Sheet	5 - 8
	4	Generator Controller Spec Sheet	9 - 16
	5	Remote Annunciator Spec Sheet	17 - 19
	6	Remote Emergency Stop Pushbutton Spec	20 - 21
	7	Alternator Data Sheets	22 - 31
	8	Voltage Regulator Spec Sheet	32 - 36
	9	Circuit Breaker Spec Sheets	37 - 39
	10	Battery Spec Sheet	40 - 40
	11	Battery Charger Spec Sheet	41 - 41
	12	Water Heater Spec Sheets	42 - 42
	13	Enclosure Spec Sheet	43 - 45
	14	Sub-Base Fuel Tank Spec Sheet	46 - 47
	15	Factory Testing Procedures	48 - 50
	16	Emissions Data	51 - 52
	17	UL Listing	53 - 54
	18	Generator Warranty	55 - 57
2	**Generator Drawings & Wiring Diagrams**		
	19	Generator Mechanical Drawing	58 - 60
	20	Generator AC Wiring Diagram	61 - 63
	21	Generator DC Wiring Diagram	64 - 64
	22	Generator PP Wiring Diagram	65 - 66
3	**Automatic Transfer Switch Specification Sheets**		
	23	Automatic Transfer Switch Data Sheet	67 - 77
4	**Automatic Transfer Switch Drawings & Wiring Diagrams**		
	24	Automatic Transfer Switch Mechanical Drawing	78 - 78
	25	Automatic Transfer Switch Wiring Diagram	79 - 84

BILL OF MATERIALS

Model:	DG04RJ113A3N
Quantity:	1
Output:	50kW, 5062.5kVA, 76 AMPS
Ratings:	Emergency Standby, Standard Unit
Voltage:	480V, 3 Phase, 12 Wire
Engine:	60Hz, Diesel, 1800 RPM Model: MTU 4R0113 DS50 EPA Certified for Emergency Standby Single Stage Air Cleaner
Cooling System:	Unit Mounted Radiator, 50 °C
Block Heater:	-20° F, 120 Volt Input, 1-Phase, 1500W Output, with isolation valves
Alternator:	130°C**,** PMG w/ DVR 2000E+
Control Panel:	MGC - 2020 Control Panel
Circuit Breaker:	200 AMP 2 POLE Amp
Battery:	Heavy Duty Lead Acid Battery with Rack and Cables
Battery Charger:	Guest 12-6A**,** 120V Input, Mounted and Wired
Enclosure:	Level 1, Weather Enclosure, Steel
Silencer:	Hospital Grade Silencer
Fuel Tank:	72 Hour @ 100% 370 Gallons w/ Stub ups
Transfer Switch:	**ASCO 300 SERIES** NEMA 3R, 200 AMP, 3 Pole, 3 Wire **Catalog # D03ATSA30200NGXF, 11BE, 18RX, 44G**
Owner's Manual:	1 ea., Compact Disk
Warranty:	2 Year / 3000 Hour Standard Factory Standby Limited Warranty

Note: If this form does not appear with fillable fields, navigate to *Edit > Preferences > PDF/A View Mode*. In the **View documents in PDF/A mode** field, select **Never**. Click **OK**.

A TOGNUM GROUP COMPANY

A - Initial Start-Up Validation and Commissioning Request Form

Requested Date: .....

☐ First Visit ☐ Follow-up Visit

Instructions

This form must be completed by the owner/contractor to ensure proper installation of the engine-generator set prior to scheduling a start-up date and to request start-up service from an authorized MTU Onsite Energy distributor or regional service center.

Requestor

Project Name .....

Requestor Name .....

Site Address .....

.....

Requestor Telephone .....

Requestor E-mail .....

Engine-Generator Set Nameplate

Model Number .....

Serial Number .....

Rating .....

HZ .....KW .....

kVA .....Volts .....

Phase .....Amps/Terminal .....

Engine

Model Number .....

Serial Number .....

Fuel Type

☐ Diesel ☐ NG ☐ LP Vapor ☐ Liquid LP

Transfer Switch / Switch Gear

Manufacturer ....Model Number. .....

Serial Number .....

Utility Service

Volts .....Phase .....

Phase Rotation .....AMPS .....

Load Bank

Load Bank Request ☐ Yes ☐ No

Capacity .....

Start-Up Validation Checklist

- ☐ Unit set in final location
- ☐ Radiator ducted to air discharge louvers
- ☐ Intake and discharge air louvers installed and wired (if applicable)
- ☐ Unit filled with oil to proper level
- ☐ Unit filled with coolant to proper level
- ☐ Battery filled and fully charged
- ☐ Battery charger mounted with AC and DC wiring
- ☐ Block heater wired to correct AC power supply
- ☐ Switch gear / Transfer switch connections made
- ☐ All other AC and DC electrical connections made
- ☐ Fuel inlet and return lines run between the unit and fuel storage system
- ☐ Fuel storage system filled with sufficient quantity for commissioning
- ☐ Exhaust system properly installed and supported
- ☐ Radiator and engine-generator set room is free of debris
- ☐ Permission for use of site load or request load bank
- ☐ Other .....

NOTE:
If the tasks on this checklist are not adequately completed upon arrival of the authorized MTU Onsite Energy technician or for reasons beyond MTU Onsite Energy's control, an additional start-up charge may be incurred. Please re-submit request form A when items are addressed.

Completed by (signature): .....

Name: .....

Date: .....

DIESEL GENERATOR SET
MTU 4R0113 DS50

50 kWe / 60 Hz / Standby
208 - 600V

SYSTEM RATINGS

Standby

Voltage (L-L)	480V**
Phase	3
PF	0.8
Hz	60
kW	50
kVA	62
Amps	75
skVA@30% Voltage Dip	172
Generator Model	361CSL1601
Temp Rise	130 °C/40 °C
Connection	12 LEAD WYE

** UL 2200 Offered

CERTIFICATIONS AND STANDARDS

// **Emissions –** EPA Tier 3 Certified

// **Generator set is designed and manufactured in facilities certified to standards ISO 9001:2008 and ISO 14001:2004**

// **UL 2200**
– UL 2200 Listed

// **Performance Assurance Certification (PAC)**
- Generator Set Tested to ISO 8528-5 for Transient Response
- Verified product design, quality and performance integrity
- All engine systems are prototype and factory tested

// **Power Rating**
- Accepts Rated Load in One Step Per NFPA 110

STANDARD FEATURES*

// MTU Onsite Energy is a single source supplier
// Global Product Support
// 2 Year Standard Warranty
// 4045TF280 Diesel Engine
- 4.5 Liter Displacement
- Mechanical Injection Pump
- 4-Cycle

// Engine-generator resilient mounted
// Complete Range of Accessories
// Generator
- Brushless, Rotating Field Generator
- 2/3 Pitch Windings
- 300% Short Circuit Capability with Optional Permanent Magnet Generator (PMG)

// Digital Control Panel(s)
- UL Recognized, NFPA 110
- Complete System Metering
- LCD Display

// Cooling System
- Integral Set-Mounted
- Engine-Driven Fan

STANDARD EQUIPMENT*

// Engine

Air Cleaner
Oil Pump
Oil Drain Extension and S/O Valve
Full Flow Oil Filter
Fuel Filter with Water Separator
Jacket Water Pump
Thermostat
Blower Fan and Fan Drive
Radiator - Unit Mounted
Electric Starting Motor - 12V
Governor – Mechanical Droop
Base - Formed Steel
SAE Flywheel and Bell Housing
Charging Alternator - 12V
Battery Box and Cables
Flexible Fuel Connectors
Flexible Exhaust Connection
EPA Certified Engine

// Generator

NEMA MG1, IEEE and ANSI standards compliance for temperature rise and motor starting
Self-Ventilated and Drip-Proof
Superior Voltage Waveform
Solid State, Volts-per-Hertz Regulator
±1% Voltage Regulation No Load to Full Load
Brushless Alternator with Brushless Pilot Exciter
4 Pole, Rotating Field
130 °C Max. Standby Temperature Rise
1 Bearing, Sealed
Flexible Coupling
Full Amortisseur Windings
125% Rotor Balancing
3-Phase Voltage Sensing
100% of Rated Load - One Step
5% Max. Total Harmonic Distortion

// Digital Control Panel(s)

Digital Metering
Engine Parameters
Generator Protection Functions
Engine Protection
Windows®-Based Software
Multilingual Capability
Remote Communications to RDP-110 Remote Annunciator
Programmable Input and Output Contacts
UL Recognized
Event Recording
IP 54 Front Panel Rating with Integrated Gasket
NFPA 110 Compatible

* Represents standard product only. Consult Factory/MTU Onsite Energy Distributor for additional configurations.

APPLICATION DATA

// Engine

Manufacturer	John Deere
Model	4045TF280
Type	4-Cycle
Arrangement	4-Inline
Displacement: L (in^3)	4.5 (275)
Bore: cm (in)	10.6 (4.19)
Stroke: cm (in)	12.7 (5)
Compression Ratio	19.0:1
Rated RPM	1,800
Engine Governor	Mechanical Droop
Max. Power: kWm (bhp)	63 (85)
Speed Regulation	±0.5%
Air Cleaner	Dry

// Liquid Capacity (Lubrication)

Total Oil System: L (gal)	13 (3.4)
Engine Jacket Water Capacity: L (gal)	8.5 (2.3)
System Coolant Capacity: L (gal)	18.9 (5)

// Electrical

Electric Volts DC	12
Cold Cranking Amps Under -17.8 °C (0 °F)	925

// Fuel System

Fuel Supply Connection Size	3/8” NPT
Fuel Return Connection Size	3/8” NPT
Max. Fuel Lift: m (ft)	1.8 (6)
Recommended Fuel	Diesel #2
Total Fuel Flow: L/hr (gal/hr)	62.5 (16.5)

// Fuel Consumption

At 100% of Power Rating: L/hr (gal/hr)	17.4 (4.6)
At 75% of Power Rating: L/hr (gal/hr)	13.6 (3.6)
At 50% of Power Rating: L/hr (gal/hr)	9.5 (2.5)

// Cooling - Radiator System

Ambient Capacity of Radiator: °C (°F)	50 (122)
Max. Restriction of Cooling Air: Intake and Discharge Side of Rad.: kPa (in. H_20)	0.12 (0.5)
Water Pump Capacity: L/min (gpm)	144 (38)
Heat Rejection to Coolant: kW (BTUM)	36 (2,049)
Heat Radiated to Ambient: kW (BTUM)	8.7 (495)
Fan Power: kW (hp)	1.6 (2.2)

// Air Requirements

Aspirating: *m^3/min (SCFM)	5.3 (187)
Air Flow Required for Rad. Cooled Unit: *m^3/min (SCFM)	117 (4,088)
Remote Cooled Applications; Air Flow Required for Dissipation of Radiated Generator Set Heat for a Max. of 25 °F Rise: *m^3/min (SCFM)	32 (1,117)

* Air density = 1.184 kg/m^3 (0.0739 lbm/ft^3)

// Exhaust System

Gas Temp. (Stack): °C (°F)	579 (1,074)
Gas Volume at Stack Temp: m^3/min (CFM)	19.2 (679)
Max. Allowable Back Pressure: kPa (in. H_20)	7.5 (30)
Min. Allowable Back Pressure: kPa (in. H_20)	N/A

WEIGHTS AND DIMENSIONS

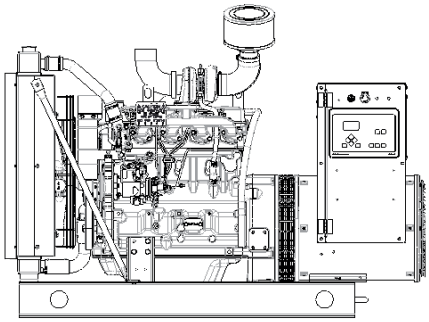

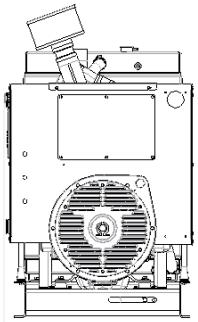

Drawing above for illustration purposes only,

EMISSIONS DATA

NO_x + NMHC	CO	PM
3.8	0.69	0.22

All units are in g/hp-hr and shown at 100% load (not comparable to EPA weighted cycle values).
Emission levels of the engine may vary with ambient temperature, barometric pressure, humidity, fuel type and quality, installation parameters, measuring instrumentation, etc. The data was obtained in compliance with US EPA regulations. The weighted cycle value (not shown) from each engine is guaranteed to be within the US EPA Standards. 5-mode emission data per 40 CFR 89 or 40 CFR 1039 (as applicable) is available upon request.

RATING DEFINITIONS AND CONDITIONS

// Standby ratings apply to installations served by a reliable utility source. The standby rating is applicable to varying loads for the duration of a power outage. No overload capability for this rating. Ratings are in accordance with ISO 3046-1, BS 5514, and AS 2789. Average load factor: ≤ 85%.

// Deration Factor:
Altitude: Consult your local MTU Onsite Energy Power Generation Distributor for altitude derations.
Temperature: Consult your local MTU Onsite Energy Power Generation Distributor for temperature derations.

© MTU Onsite Energy. Subject to alteration due to technological advances. OE 23 459 (77 3E) 2015-10

C/F = Consult Factory/MTU Onsite Energy Distributor
N/A = Not Available

DIGITAL GENERATOR SET CONTROLLER
MGC-2000 Series Data Sheet

MTU Onsite Energy Generator Set Controllers (MGC Series) are highly advanced integrated digital generator set control systems. The MGC-2000 Series is perfectly focused, combining rugged construction and microprocessor technology to offer a product that will hold up to almost any environment and is flexible enough to meet your application's needs. The MGC-2000 Series provides generator set control, transfer switch control, metering, protection, and programmable logic in a simple, easy-to-use, reliable, rugged, and cost effective package.

PRODUCT HIGHLIGHTS

- Three-phase generator metering
- Engine metering
- Generator set control
- Engine protection
- Generator protection
- Var sharing over Ethernet
- BESTCOMS*Plus*®
  - Windows®-based software for optional remote operation (Software can be downloaded at www.mtuonsiteenergy.com)
  - Programming and setup software
  - Intuitive and powerful
  - Remote control and monitoring
  - Programmable logic
  - USB communications
- Automatic transfer switch compatible
- Exercise timer
- Suitable for use on rental generator sets with high/low line sensing, single or three phase sensing override, and wye/delta/grounded delta
- SAE J1939 Engine Control Unit (ECU) communications
- Automatic generator configuration detection
- Selection of integrating reset of instantaneous reset characteristics for overcurrent protection
- Multilingual capability
- Remote annunciation to RDP-110
- Extremely rugged, fully potted design
- 16 programmable contact inputs, 12 programmable contact outputs
- ModBus™ communications with RS-485 (optional)
- UL recognized
- Highly Accelerated Life Tests (HALT) tested
- IP 54 front panel rating with integrated gasket
- NFPA-110 compatible
- Microprocessor based
- Complete system metering
- Expandable to meet customer needs

*Please refer to the MGC Series Controller Comparison Data Sheet for available configured options.

DIAGRAM

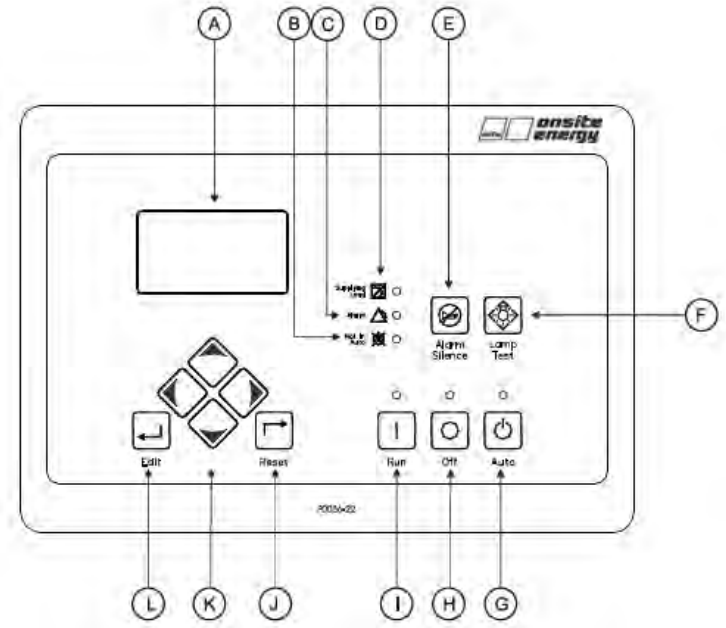

Front Panel Descriptions

- Liquid Crystal Display (A)
- Not in Auto Indicator (B)
- Alarm Indicator (C)
- Supplying Load Indicator (D)
- Alarm Silence Pushbutton (E)
- Lamp Test Pushbutton (F)
- Auto Pushbutton and Mode Indicator (G)
- Off Pushbutton and Mode Indicator (H)
- Run Pushbutton and Mode Indicator (I)
- Reset Pushbutton (J)
- Arrow Pushbuttons (K)
- Edit Pushbutton (L)

FUNCTIONS

Generator Set Protection

Generator ANSI Codes

- Overvoltage (59)
- Overfrequency (81O)
- Reverse Power (32)
- Undervoltage (27)
- Underfrequency (81U)
- Loss of Excitation (40Q)
- Phase Imbalance (47)
- Overcurrent (51) (optional)
- Vector Shift (78) (optional)
- Rate of Change of Frequency (ROCOF) (81R) (optional)

All generator set protection features are programmable as alarms, pre-alarms, status, or not used.

Alarms (Shutdowns)

- Low Oil Pressure
- High Coolant Temperature
- Low Coolant Level
- Overspeed
- Overcrank
- Coolant Temp Sender Fail (non-ECU engines)
- Oil Pressure Sender Fail (non-ECU engines)
- Emergency Stop
- Critical Low Fuel Level (optional)

FUNCTIONS, Generator Set Protection, continued:

Pre-Alarms (Warnings)

- Low Oil Pressure
- High Coolant Temperature
- Low Coolant Temperature
- Battery Overvoltage
- Weak Battery Voltage
- AEM Comms Failure
- Breaker Open Failure
- CEM Comms Failure
- Generator Reverse Rotation
- Engine kW Overload (three levels)
- Loss of Sensing
- Checksum Failure
- ECU Comms Fail
- Low Fuel Level
- High Fuel Level
- Active Diagnostic Trouble Codes (DTC)
- Breaker Close Failure
- Low Battery Voltage

All alarms and pre-alarms can be enabled or disabled via the BESTCOMS*Plus*® PC software or the front panel. Additional custom alarms and pre-alarms are available upon request.

Generator Set Metering

- Generator parameters include voltage, current, real power (watts), apparent power (VA), and power factor (PF).
- Engine parameters include oil pressure, coolant temperature, battery voltage, speed, fuel level, engine load, coolant level (from ECU), ECU specific parameters, and run-time statistics.

Engine Control

- Cranking Control: Cycle or Continuous (Quantity and Duration fully programmable)
- Engine Cooldown: Smart Cooldown function saves fuel and engine life
- Successful Start Counter: Counts and records successful engine starts
- Timers:
  - Engine Cooldown Timer
  - Engine Maintenance Timer
  - Pre-Alarm Time Delays for Weak/Low Battery Voltage
  - Alarm Time Delay for Overspeed
  - Alarm Time Delay for Sender Failure
  - Arming Time Delays after Crank Disconnect:
    - Low Oil Pressure
    - High Coolant Temperature
  - Pre-Crank Delay
  - Continuous or Cycle Cranking Time Delay
  - Programmable Logic Timers

FUNCTIONS, continued:

Event Recording

The MGC-2000 Series has an event recorder that provides a record of alarms, pre-alarms, engine starts, engine runtime loaded, engine runtime unloaded, last run date, and many other events that are all date and time stamped to help the user determine the cause and effect of issues related to the generator set. Contains 30 event records each retaining up to 99 occurrences in memory. Time, date, and engine hour detail is available for the most current 30 occurrences within each event record.

Transfer Switch Control (Mains Failure)

The MGC-2000 Series has the ability to detect a mains failure via a single- or three-phase bus input. A mains failure is established when any one of the following conditions are met:

- Any phase of bus voltage falls below the dead bus threshold
- Any phase of bus voltage is unstable due to overvoltage or undervoltage
- Any phase of bus voltage is unstable due to overfrequency or underfrequency

When conditions are met, the MGC-2000 Series will start the generator set and, when ready, will send generator and mains breaker commands to apply power to the load from the generator set. The MGC-2000 Series implements open or closed breaker transitions to and from the mains. When the mains returns and is considered stable, the MGC-2000 Series will transfer the load back to the mains and stop the engine.

ModBus™ RTU

When utilized, the user can send and receive information from the MGC-2000 Series via the RS-485 communications port and ModBus™ RTU protocol. This feature allows the MGC-2000 Series controlled generator set to be fully integrated into the building management system. Please see the *MGC-2000 Series Controller Manual* for the ModBus™ register list.

Programmable Logic

The MGC-2000 Series offers a very powerful, yet easy-to-use, programmable logic scheme, BESTlogic™*Plus*, for custom programming of the various inputs, outputs, alarms, and pre-alarms. It allows these elements to be integrated into a complete logic scheme so that the user can meet even the most complex specification. The programmable logic control includes the selection of logic gates and timers, with drag-and-drop technology to make it fast and simple.

Remote Display Panel Annunciation

The MGC-2000 Series can communicate to a remote display panel, Model RDP-110. This requires only two wires to annunciate all of the alarms and pre-alarms required by NFPA-110 Level I and II. External power is required.

External Modem Interface

The MGC-2020 and MGC-2050 controllers include an external modem interface permitting an external modem to be connected to the MGC controller via RS-232. A dial-out modem enables remote control, monitoring, and setting of the MGC-2000 Series. When an alarm or pre-alarm condition occurs, the MGC-2000 Series can dial up to four telephone numbers in sequence until an answer is received and the condition is annunciated.

Note: Only an external modem interface is provided. The external modem must be provided by a third party. The external modem is only available on the MGC-2020 and MGC-2050 controller configurations of the MGC-2000 Series.

FUNCTIONS, continued:

SAE J1939 Communications

SAE J1939 CANBus communications allows the MGC-2000 Series to communicate with the ECU to gather critical engine information like oil pressure, engine coolant temperature, RPM, battery voltage, and much more. By utilizing the ECU, the addition of analog engine senders is no longer required. This can save substantial money for the installer. It also eliminates any errors or discrepancies between the ECU data and the data displayed on the MGC-2000 Series that may be present due to analog sender inaccuracies or incompatibility. An additional benefit is access to the ECU's diagnostic troubleshooting codes (DTCs). The DTCs provide information about the engine's operating conditions and communicates these, via SAE J1939, to the MGC-2000 Series, eliminating the need for hand-held service tools to diagnose simple engine issues.

SPECIFICATIONS

Operating Power

- Nominal: 12 or 24 VDC
- Range: 6 to 32 VDC
- Power Consumption:
  - Sleep Mode: 5W with all relays non-energized
  - Normal Operational Mode: 7.9W - Run mode, LCD heater off, six relays energized
- Battery Ride-Through: Withstands cranking ride-through down to 0 V for 50 ms, starting at 10 VDC.

Current Sensing (5 A CT Inputs)

- Continuous Rating: 0.1 to 5.0 Aac
- One Second Rating: 10 Aac
- Burden: 1 VA

Voltage Sensing

- Range: 12 to 576 V rms, line-to-line
- Frequency Range: 10 to 72 Hz
- Burden: 1 VA
- One Second Rating: 720 V rms

Input Contacts

Contact sensing inputs include one emergency stop input and 16 programmable inputs. The emergency stop input accepts normally closed, dry contacts. The remote emergency stop is limited to 75 ft. standard. Extended runs are available with optional relay. All programmable inputs accept normally open, dry contacts. The factory utilizes up to three of these inputs.

Engine System Inputs

- Fuel Level Sensing Resistance Range: 0 to 250 Ω nominal
- Coolant Temperature Sensing Resistance Range: 10 to 2,750 Ω nominal
- Oil Pressure Sensing Resistance Range: 0 to 250 Ω nominal
- Engine Speed Sensing:
  - Magnetic Pickup or CANBus
    - Magnetic Pickup Voltage Range: 3 to 35 V peak (6 to 70 V peak to peak)
    - Magnetic Pickup Frequency Range: 32 to 10,000 Hz
  - Generator Frequency (alternate or redundant)
    - Voltage Range: 12 to 576 V rms

SPECIFICATIONS, continued:

Output Contacts

- (15) Total Programmable Outputs: (3) 30 A @ 28 VDC and (12) 2 A @ 30 VDC
- The factory utilizes the following on each generator set which can be reprogrammed as needed:
  - (3) 30 A @ 28 VDC for Pre-start, Start, and Run
  - (12) 2 A @ 30 VDC for General Purpose

Metering

- Generator and Bus Voltage (rms)
  - Metering Range: 0 to 576 VAC (direct measurement); up to 9,999 VAC (with appropriate voltage transformer)
  - Accuracy: ±1% of programmed rated voltage of ±2 VAC (subject to accuracy of voltage transformer when used)
- Generator Current (rms)
  - Generator current is measured at the secondary windings of 5 A CTs.
  - Metering Range: 0 to 5,000 Aac
  - CT Primary Range: 1 to 5,000 Aac, in primary increments of 1 Aac
  - Accuracy: ±1% of programmed rated current or ±2 Aac (subject to accuracy of CTs)
- Generator and Bus Frequency
  - Metering Range: 10 to 72 Hz
  - Accuracy: ±0.25% or 0.05 Hz
- Apparent Power
  - Indicates total kVA and individual line kVA (four-wire, line-to-neutral or three-wire, line-to-line).
  - Accuracy: ±3% or the full-scale indication or ±2 kVA
- Power Factor
  - Metering Range: 0.2 leading to 0.2 lagging
  - Accuracy: ±0.02
- Real Power
  - Indicates total kW and individual line kW (four-wire, line-to-neutral or three-wire, line-to-line)
  - Accuracy: ±3% of the full-scale indication or ±2 kW
- Oil Pressure
  - Metering Range: 0 to 150 psi or 0 to 1,034 kPa
  - Accuracy: ±3% of actual indication or ±2 psi or ±12 kPa (subject to accuracy of sender)
- Coolant Temperature
  - Metering Range: 0 °C to 204 °C (32 °F to 410 °F)
  - Accuracy: ±3% of actual indication or ±2° (subject to accuracy of sender)
- Fuel Level
  - Metering Range: 0 to 100%
  - Accuracy: ±2% (subject to accuracy of sender)
- Battery Voltage
  - Metering Range: 6 to 32 VDC
  - Accuracy: ±3% of actual indication or ±0.2 VDC
- Engine RPM
  - Metering Range: 0 to 4,500 rpm
  - Accuracy: ±2% of actual indication or ±2 rpm

SPECIFICATIONS, Metering, continued:

- Engine Run Time
  - Engine run time is retained in non-volatile memory.
  - Metering Range: 0 to 99,999 h; Update Interval: 6 min
  - Accuracy: ±1% of actual indication or ±12 min
- Maintenance Timer
  - Maintenance timer indicates the time remaining until generator set service is due. Value is retained in non-volatile memory.
  - Metering Range: 0 to 5,000 h; Update Interval: 6 min
  - Accuracy: ±1% of actual indication or ±12 min

Generator Protection Functions

- Overvoltage (59) and Undervoltage (27)
  - Pickup Range: 70 to 576 VAC
  - Activation Delay Range: 0 to 30 s
- Overfrequency (81O) and Underfrequency (81U)
  - Pickup Range: 45 to 66 Hz
  - Pickup Increment: 0.1 Hz
  - Activation Delay Range: 0 to 30 s
- Reverse Power (32)
  - Pickup Range: –50 to 5%
  - Pickup Increment: 0.1%
  - Hysteresis Range: 1 to 10%
  - Hysteresis Increment: 0.1%
  - Activation Delay Range: 0 to 30 s
  - Activation Delay Increment: 0.1 s
- Loss of Excitation (40Q)
  - Pickup Range: –150 to 0%
  - Pickup Increment: 0.1%
  - Hysteresis Range: 1 to 10%
  - Hysteresis Increment: 0.1%
  - Activation Delay Range: 0 to 30 s
  - Activation Delay Increment: 0.1 s
- Overcurrent (51)
  - Pickup Range: 0.18 to 1.18 Aac (1 A current sensing)
  - Time Dial Range: 0
- Phase Imbalance (47)
  - Pickup Range: 5 to 100 VAC
  - Pickup Increment: 1 VAC
  - Activation Delay Range: 0 to 30 s
  - Activation Delay Increment: 0.1 s
- ROCOF (81R) (optional)
  - Pickup Range: 0.2 to 10 Hz/s
  - Pickup Increment: 0.1 Hz/s
  - Activation Delay Range: 0 to 10,000 ms
  - Activation Delay Increment: 1 ms
  - Accuracy: 0.2 Hz/s

SPECIFICATIONS, Generator Protection Functions, continued:

- Vector Shift (78) (optional)
  - Pickup Range: 2 to 90°
  - Pickup Increment: 1°
  - Accuracy: ±1°

Environmental

- Temperature
  - Operating: -40 °C to 70 °C (-40 °F to 158 °F)
  - Storage: -40 °C to 85 °C (-40 °F to 185 °F)
- Humidity: IEC 68-2-38
- Salt Fog: ASTM B 17-73, IEC 68-2-11 (tested while operational)
- Ingress Protection: IEC IP54 for front panel
- Shock: 15 G in three perpendicular planes
- Vibration: 5 to 29 to 5 Hz at 1.5 G peak for 5 min.
  29 to 52 to 29 Hz at 0.036" DECS-A for 2.5 min.
  52 to 500 to 52 Hz at 5 G peak for 7.5 min.
  - Swept over the above ranges for 12 sweeps in each of three mutually perpendicular planes with each 15 minute sweep.

Agency Approvals

- UL Approvals: "cURus" approved to UL 6200
- NFPA Compliance: Complies with NFPA Standard 110, Standard for Emergency and Standby Power

ADDITIONAL SPECIFICATIONS

Battery Backup for Real Time Clock

The MGC-2000 Series provides a real-time clock with an internal backup battery. The battery will maintain timekeeping for approximately 10 years (depending on conditions) after power is removed from the controller. The clock is used by the event recorder and sequence of events functions to time-stamp events, and the exercise timer is used to start and stop the generator set when the exercise feature is utilized.

Breaker Management

The MGC-2000 Series is capable of controlling the generator breaker and the mains breaker. The status of the breakers is determined by using BESTlogic™*Plus* programmable logic to set up the GENBRK and MAINSBRK logic blocks. These logic blocks have outputs that can be configured to energize an output contact and control a breaker, as well as inputs for breaker control and status. The MGC-2000 Series will attempt to close a breaker only after verifying that it can be closed. If the breaker cannot be closed, the close request will be ignored. Only one breaker can be closed at a time. Synchronization is required before closing the breaker to a live bus. Closure to a dead bus can be performed after meeting dead bus threshold and timing requirements set by the user.

REMOTE DISPLAY PANEL
RDP-110 Annunciator Data Sheet

HIGHLIGHTS

- Annunciation of eight alarms and seven pre-alarms as detected by the digital generator set controller
- Four programmable LEDs via BESTlogic™ *Plus*
- RS-485 communications reduces the number of interconnection wires to four
- Interconnect distance up to 4,000 ft
- UL Listed

DESCRIPTION

The RDP-110 is a remote annunciation device used in conjunction with digital generator set controllers to provide remote annunciation of the emergency standby generator system. This panel allows for two programmable alarms, two programmable pre-alarms, and is compatible with NFPA 110. The digital generator set controller detects an alarm or pre-alarm condition and communicates via RS-485 to the RDP-110. The RDP-110 is available in two mounting configurations: surface and semi-flush mount.

STANDARD FEATURES

- Eight LED Alarms
  - Low coolant level
  - Low oil pressure
  - Engine overspeed
  - Fuel leak*
  - High coolant temperature
  - Engine overcrank
  - Emergency stop activated
  - Sender failure*

- Seven LED Pre-Alarms
  - High coolant temperature
  - Low oil pressure
  - Battery overvoltage*
  - Battery charger failure*
  - Low coolant temperature
  - Low fuel level
  - Weak battery

- Three LED operating conditions
  - Switch not in auto
  - EPS supplying load
  - Display panel on

- Audible alarm horn rated at 90 dB (from a distance of two feet)
- Lamp test and alarm silence
- Power supply inputs for 12, 24 VDC, or 120 VAC (at the RDP-110 location)
- Available in two mounting configurations: semi-flush and surface mounted
- Conduit box included
- Designed for use in harsh environments

* Pre-configured, but can be reprogrammed and relabeled to match the function of the indicator.

REMOTE DISPLAY PANEL
RDP-110 Annunciator Data Sheet

SPECIFICATIONS

Ordering Information

- MTU Onsite Energy Part Number (Flush mount): X00A30100046
- MTU Onsite Energy Part Number (Surface mount): X00A30100047

Power Input

- DC Voltage: 8-32 VDC (2.5W)
- AC Voltage: 80-144 VAC (5VA)

Environmental and Physical

- Operating Temperature: -40 °C to 70 °C (-40 °F to 158 °F)
- Storage Temperature: -40 °C to 85 °C (-40 °F to 185 °F)
- Salt Fog: Qualified to ASTM 117B-1989
- Vibration: The device withstands 2 g in each of the three mutually perpendicular planes, swept over the range of 10 to 500 Hz for a total of six sweeps, 15 minutes each sweep, without structural damage or degradation of performance.
- Shock: 15 g
- Weight: 6.5 lb (3 kg)

Agency Approvals

- NFPA 110 Level 1 Compliant
- UL Listed to UL 6200, file E97035

DIMENSIONS

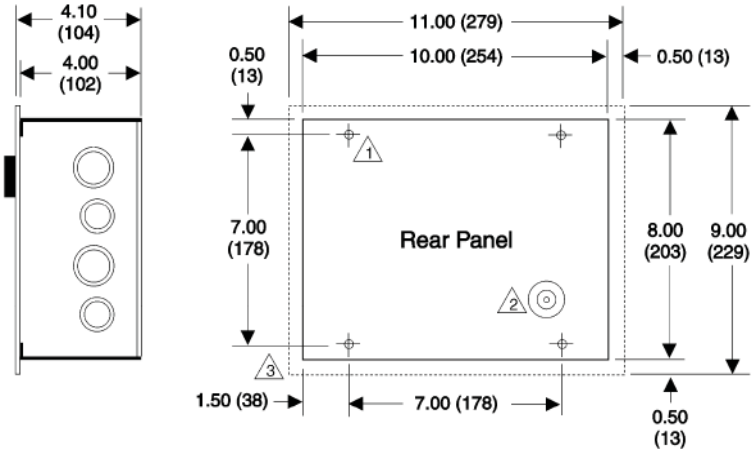

RDP-110 Mounting Dimensions

1. Mounting hole diameter (4 places, on rear wall of enclusure) is 0.281 in (7 mm).
2. Grounding point is 10-31 threaded hole.
3. Dashed line indicates outline of flush-mount panel.

Note: All dimensions are provided in inches (millimeters).

PANEL DISPLAY

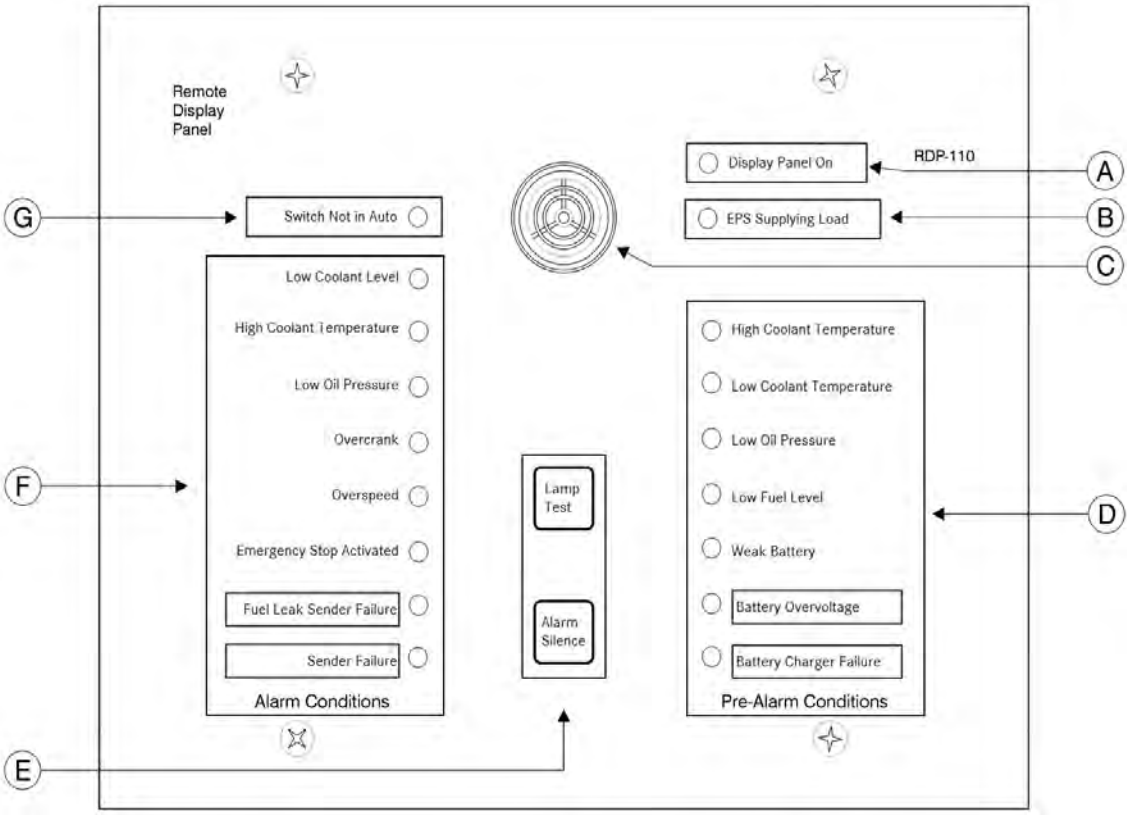

Front Panel Controls and Indicators

A Green LED lights when power is applied to the RDP-110.

B Green LED turns ON when the generator set is supplying more than 2% of rated load.

C The horn sounds when an alarm or pre-alarm exists or the connected digital generator set controller is not operating in Auto mode.

D Pre-Alarm LEDs light when the corresponding pre-alarm setting is exceeded.

E RDP-110 controls consist of two pushbuttons. The Alarm Silence pushbutton silences the horn. The Lamp Test pushbutton can be used to verify operation of all RDP-110 LEDs and the horn.

F Alarm LEDs light when the corresponding alarm setting is exceeded.

G Red LED lights when the digital generator set controller is not operating in Auto mode.

© MTU Onsite Energy. Subject to alteration due to technological advances. 2016-06

REMOTE EMERGENCY STOP PUSHBUTTON
Data Sheet

DESCRIPTION

The remote emergency stop pushbutton provides an added level of safety for generator set shutdown. This sturdy, self-latching mushroom button is assembled in a rugged, handy box.

When the button is in its normal state (released and indicator is green), the contacts are closed. Pressing the button opens the contact, which de-energizes the downstream relay coils.

This action communicates with the generator set controller and/or the ECU to initiate an emergency shutdown. Once actuated, the pushbutton must be manually released (twist-to-release) before the generator set controller alarm can be cleared.

FEATURES

- Heavy-duty steel enclosure
- Self-monitoring contact block opens circuit if detached from the actuator
- 45 mm (1.77 in) mushroom button with mechanical indicator
- Pre-assembled

SPECIFICATIONS

• MTU Onsite Energy Part #:	SUASA150340
• Enclosure Dimensions:	Length: 152.4 mm (6 in) Width: 152.4 mm (6 in) Height: 101.6 mm (4 in)
• Pushbutton Actuator Dimensions:	Diameter (Ø): 45 mm (1.77 in) Length: 48 mm (1.89 in)
• Weight:	1.36 kg (3 lbs)
• Enclosure Type:	Surface-mount, Type 1 (IP 20 equivalent)
• Contact Configuration:	1 N.C. (Normally Closed)
• Terminal Type:	Screw clamp
• Wire Range:	4-20 AWG stranded, 14-18 AWG solid
• Approvals:	Switch: UL Listed Enclosure: UL Listed
• Electrical Ratings for MTU Onsite Energy Application:	12 VDC or 24 VDC 1 Amp

CERTIFICATIONS AND STANDARDS

• Switch:	UL Listed
• Enclosure:	UL Listed

REMOTE EMERGENCY STOP PUSHBUTTON
Data Sheet

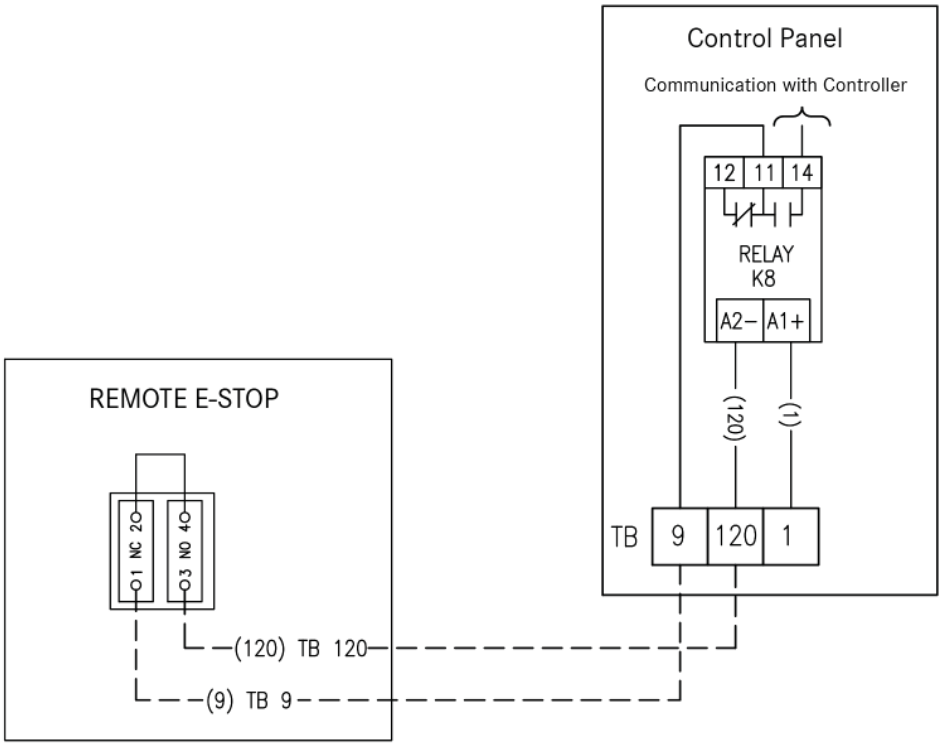

Electrical Schematic

© MTU Onsite Energy. Subject to alteration due to technological advances. 2016-09

MAGNAPLUS®

Generator Ratings:
kW 5 to 430 (60 Hertz)

MARATHON ELECTRIC
GENERATORS

ISO 9001:2008 Certified

MAGNAPLUS®

Innovation
Performance
Reliability

MAGNAPLUS® offers a field-adaptable, permanent magnet generator, coupled with the PM300 or DVR®2000E voltage regulator, for installations requiring fault current support or for applications involving non-linear loads. These regulators enhance generator performance and offer additional features, meeting the needs of the most difficult applications.

What makes the Marathon Electric approach unique?

Proven top performers in every respect, **MAGNAPLUS®** generators offer powerful performance, reliable power generation, and easy installation. With a full range of voltage regulator configurations, **MAGNAPLUS®** provides application flexibility to meet unique installation requirements. Ruggedly constructed with solid state technology, Marathon's SE350 voltage regulator, included with all standard equipment, is a solid performer.

These unique design features make **MAGNAPLUS®** the ideal general purpose generator for standby and prime power markets such as:

- **Agricultural**
- **Commercial**
- **Telecommunications**
- **Marine**
- **Construction**
- **Rental Markets**

Marathon Electric: The experts in your field

As an independent manufacturer with more than fifty years of experience as a leading supplier to the generator market, Marathon Electric is dedicated to designing and manufacturing the highest quality electrical products.

Marathon's commitment to long term customer support and an intensive product development program means you get more:

- **Design & Application Experience**
- **Advanced Testing Facilities**
- **Technical Support Staff**
- **Broad Product Line**

MARATHON ELECTRIC
GENERATORS

kW Ratings

60 Hertz
Three Phase, 12 Leads ④

1800 RPM
0.8 Power Factor
40°C Ambient

MAGNAPLUS® Standard Models

Base Model	Bolt-On PMG Option Avail.	kW Continuous Duty				kW Standby Duty			
		Class F 105°C		Class H 125°C		Class F 130°C		Class H 150°C	
		480Y/240Y	416Y/208Y	480Y/240Y	416Y/208Y	480Y/240Y	416Y/208Y	480Y/240Y	416Y/208Y
361CSL1601①	Yes	55	50	60	55	60	55	65	58

① 361 to 431 PSL (single bearing) or PDL (double bearing) models are the alternate to CSL models and have equivalent performance and dimensions.
② PMG Option available as build-up only.
③ Specialty and two bearing orders utilize these windings in place of 280 frame CSL models.
④ All MagnaPlus® models have linkboard as standard.

Product Features

Choice . . . abounds with more than 34 stock models ranging from 5–430 kW (60 Hz) and 5–420 kVA (50 Hz). All three-phase generators are 12-lead reconnectable, providing voltage and phase flexibility. For applications requiring price-sensible, dedicated single-phase generators, Marathon Electric stocks 26 models. Standard and optional conduit box designs are available to meet all customer requirements and to ease installation of accessories.

Easy Mount SAE Adapters . . . provided with every generator, are designed with easy drive disc access to simplify the mounting to all popular engines. Generator foot mounting location is unaffected by adapter changes. Special adaptations for automotive engines are available.

Class H Insulation System . . . utilizes an unsaturated polyester varnish for optimal insulation life and superior moisture protection. An epoxy overcoat is added for increased environmental protection. Field windings are wet wound with epoxy and designed to withstand overspeeds of 125%. All windings are 100% copper with class H insulation.

Linkboards . . . are standard to simplify voltage reconnection and support lead termination.

SE350 Voltage Regulator . . . is encapsulated for reliable performance in all environments. The SE350 regulator provides 1% regulation, underspeed protection, stability adjustment to optimize transient performance, and EMI filtering to commercial standards.

Optimized Electrical Design . . . with four-pole, brushless features, utilizes a 2/3 pitch winding to minimize harmonic distortion. The main rotor, utilizing Marathon Electric's unirotor construction, provides exceptional waveshape and voltage balance. The unirotor construction method incorporates full amortisseur windings facilitating parallel operation and non-linear loads.

Enhanced Ventilation . . . created by a high efficiency cast aluminum fan and optimized internal air flow patterns, maximizes heat transfer and minimizes hot spot differentials for extended winding life. Durable aluminum alloy fans avoid breakage problems associated with steel weldments or plastic fans.

Fully Guarded . . . for operator safety and generator protection. No rotating or electrically energized parts are exposed. All openings are covered by louvers or screens.

Heavy Duty Bearings . . . are double shielded and pre-lubricated for the life of the bearing. This helps resist contamination and ensures a maximum bearing life.

Design Specs and Agency Approvals . . . are important at Marathon. All MAGNAPLUS® units meet NEMA MG1-32, BS5000, and IEC 34-1 requirements. **MAGNAPLUS®** generators are also fully UL Listed. Marine versions are available to meet American Bureau of Shipping, Lloyds, Det Norske Veritas, or Nippon Kaiji Kyokai requirements.

MARATHON ELECTRIC
GENERATORS

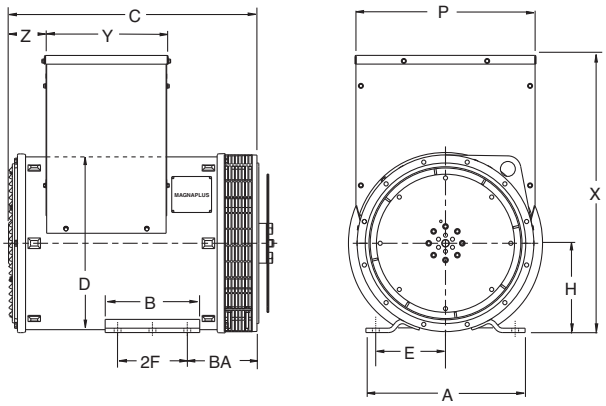

MAGNAPLUS®

Dimensions in inches and (millimeters)

All dimensions are approximate.

Refer to dimension section of the Generator catalog for full dimensional data.

Frame Size	A	B	BA	C	C with PMG	D	E	2F	H	P	X	Y	Z
361	16.00	9.50	7.00	24.96	30.06	17.35	7.00	7.00	9.00	18.19	27.85	12.44	3.52
	(406)	(241)	(178)	(634)	(764)	(441)	(178)	(178)	(229)	(462)	(707)	(316)	(89)

MARATHON ELECTRIC GENERATORS

Your Independent Power Source for the 21st Century!

100 E. Randolph Street • P.O. Box 8003
Wausau, WI 54402-8003 USA

www.marathonelectric.com

Phone: 715-675-3359
Fax: 715-675-8026

Marathon Electric Generators is a trademark of Regal Beloit Corporation.

REGAL BELOIT

MAGNAPLUS

MARATHON ELECTRIC GENERATORS

SYNCHRONOUS AC GENERATOR
TYPICAL SUBMITTAL DATA

Base Model: 361CSL1601 / 361PSL1601

Winding: 1601

Date: 10/13/2016

Kilowatt ratings at	1800 RPM	60 Hertz	12 Leads
kW (kVA)	3 Phase	0.8 Power Factor	Open or Dripproof Enclosure

Voltage (1)	CONTINUOUS (2)			STANDBY (2)	
	NEMA B 80/40 °C	NEMA F 105/40 °C	NEMA H 125/40 °C	NEMA F 130/40 °C	NEMA H 150/40 °C
240Y/480Y	49 (61)	55 (69)	60 (75)	60 (75)	65 (81)
220Y/440Y	48 (60)	53 (66)	58 (73)	58 (73)	61 (76)
208Y/416Y	45 (56)	50 (63)	55 (69)	55 (69)	58 (73)
200Y/400Y	43 (54)	48 (60)	53 (66)	53 (66)	55 (69)
190Y/380Y	41 (51)	45 (56)	50 (63)	50 (63)	52 (65)

(1) Voltage L-L, refers to wye (star) connection.

(2) Rise by resistance method, Mil-Std-705, Method 680.1b / Ambient.

Submittal Data: 480 Volts, 50 kW, 62.5 kVA, 1800 RPM, 60 Hz, 3 Phase (kVA, Hz, and Voltage apply to per unit (pu) base)

Mil-Std-705B

Method	Description	Value	
301.1b	Insulation Resistance	>1.5 Meg	
302.1a	High Potential Test		
	Main Stator	2000	Volts
	Main Rotor	1500	Volts
	Exciter Stator	1500	Volts
	Exiter Rotor	1500	Volts
	PMG Stator	1500	Volts
401.1a	Stator Resistance, Line to Line		
	High Wye Connection	0.264	Ohms
	Rotor Resistance	0.81	Ohms
	Exciter Stator	23.5	Ohms
	Exciter Rotor	0.12	Ohms
	PMG Stator Resistance	2.1	Ohms
410.1a	No Load Exciter Field Amps		
	at 480 Volts Line to Line	0.53	A DC
420.1a	Short Circuit Ratio	0.72	
421.1a	Xd Synchronous Reactance	1.875	pu
		6.912	Ohms
422.1a	X2 Negative Sequence Reactance	0.169	pu
		0.623	Ohms
423.1a	X0 Zero Sequence Reactance	0.04	pu
		0.147	Ohms
425.1a	X'd Transient Reactance	0.133	pu
		0.49	Ohms
426.1a	X"d Subtransient Reactance	0.11	pu
		0.406	Ohms
427.1a	T'd Transient Short Circuit Time Constant	0.048	sec
428.1a	T"d Subtransient Short Circuit Time Constant	0.008	sec
430.1a	T'do Transient Open Circuit Time Constant	0.68	sec
432.1a	Ta Short Circuit Time Constant of Armature Winding	0.01	sec

Mil-Std-705B

Method	Description	Value	
505.3b	Overspeed	2250	RPM
507.1c	Phase Sequence CCW-ODE	ABC	
601.4a	L-L Harmonic Maximum - Total	3.5	%
	(Distortion Factor)		
	L-L Harmonic Maximum - Single	2.5	%
601.1c	Deviation Factor	7.0	%
	TIF (1960 Weightings)	<50	
	Generator Frame	361	
	Type	Standard	
	Insulation	Class H	
	Coupling-Single Bearing	Flexible	
	Amortisseur Windings	Full	
	Exciter	Ext. Voltage Regulated, Brushless	
	Voltage Regulator	DVR2000E+	
	Voltage Regulation	0.25	%
	Cooling Air Volume	700	CFM
	Heat Rejection Rate	271.0	BTU/min
	Full Load Current	75.2	A
	Minimum Input Hp Required	73.4	Hp
	Full Load Torque	214.1	ft*lb
	Efficiency at Rated Load	91.3	%
	Weight	569	lbs

MARATHON ELECTRIC GENERATORS

SYNCHRONOUS AC GENERATOR
TYPICAL DYNAMIC CHARACTERISTICS

Date: 10/13/2016

Base Model: 361CSL1601 / 361PSL1601

Submittal Data: 480 Volts, 50 kW, 62.5 kVA, 1800 RPM, 60 Hz, 3 Phase

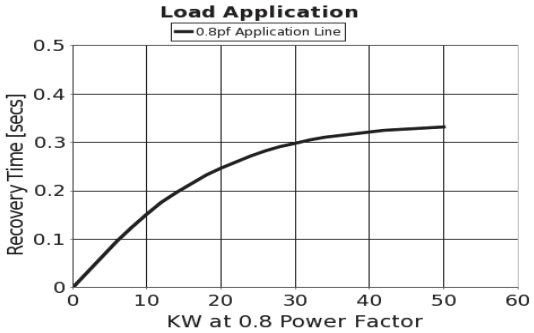

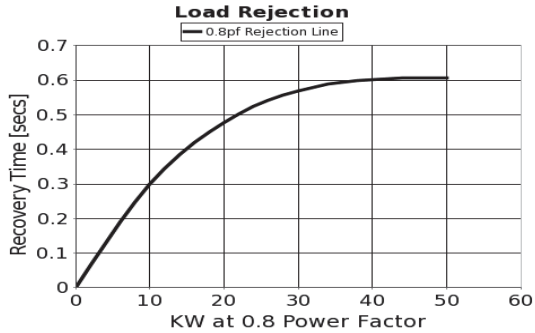

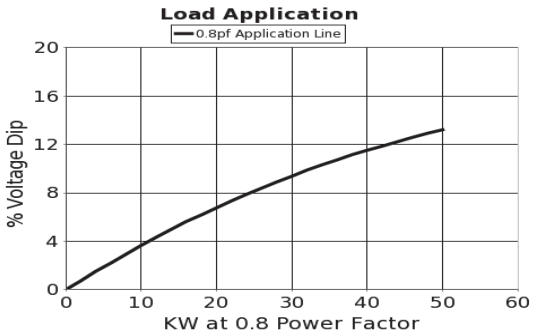

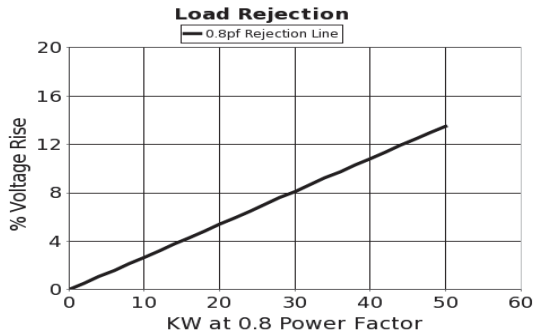

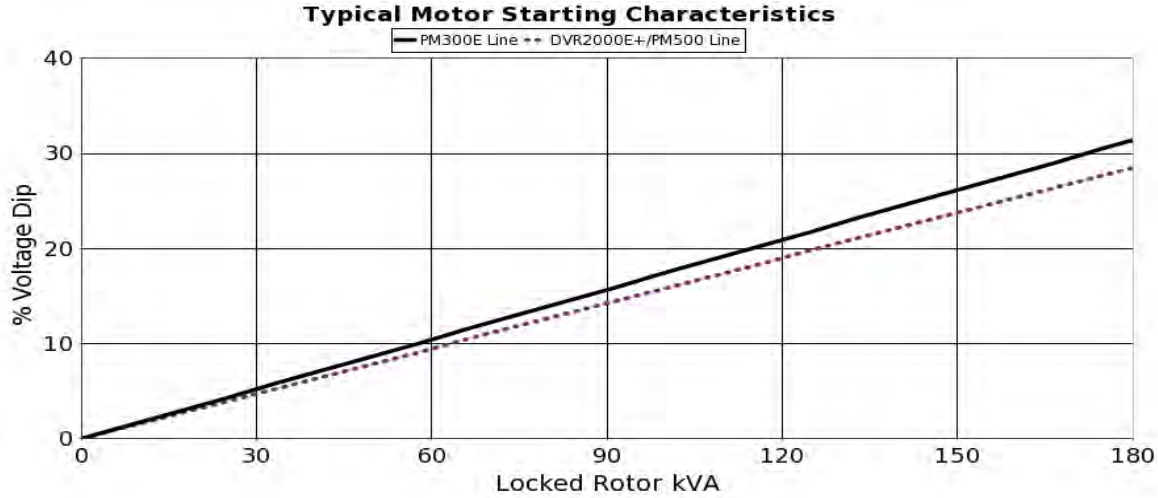

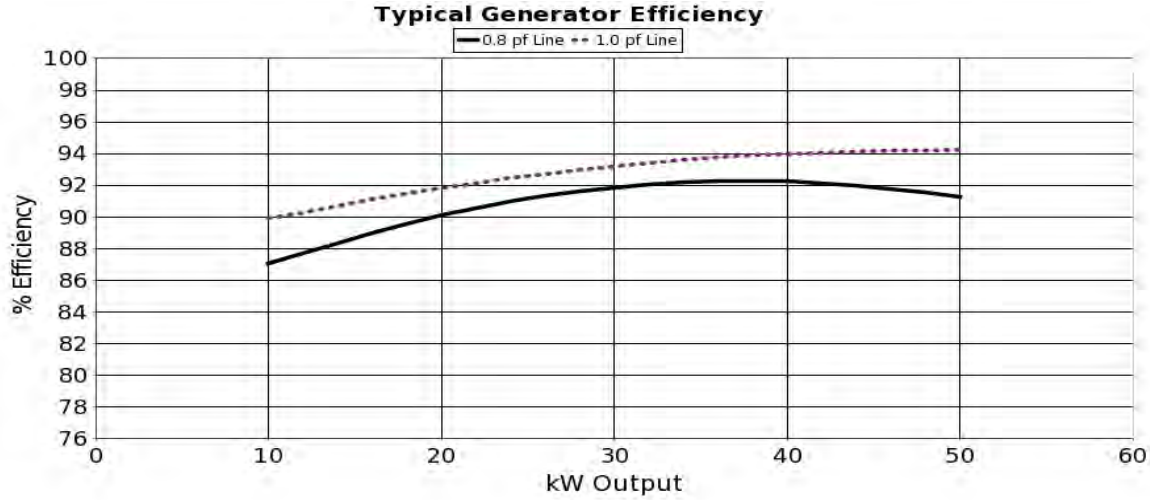

Reactive Capability Curve

marathon™ Generators

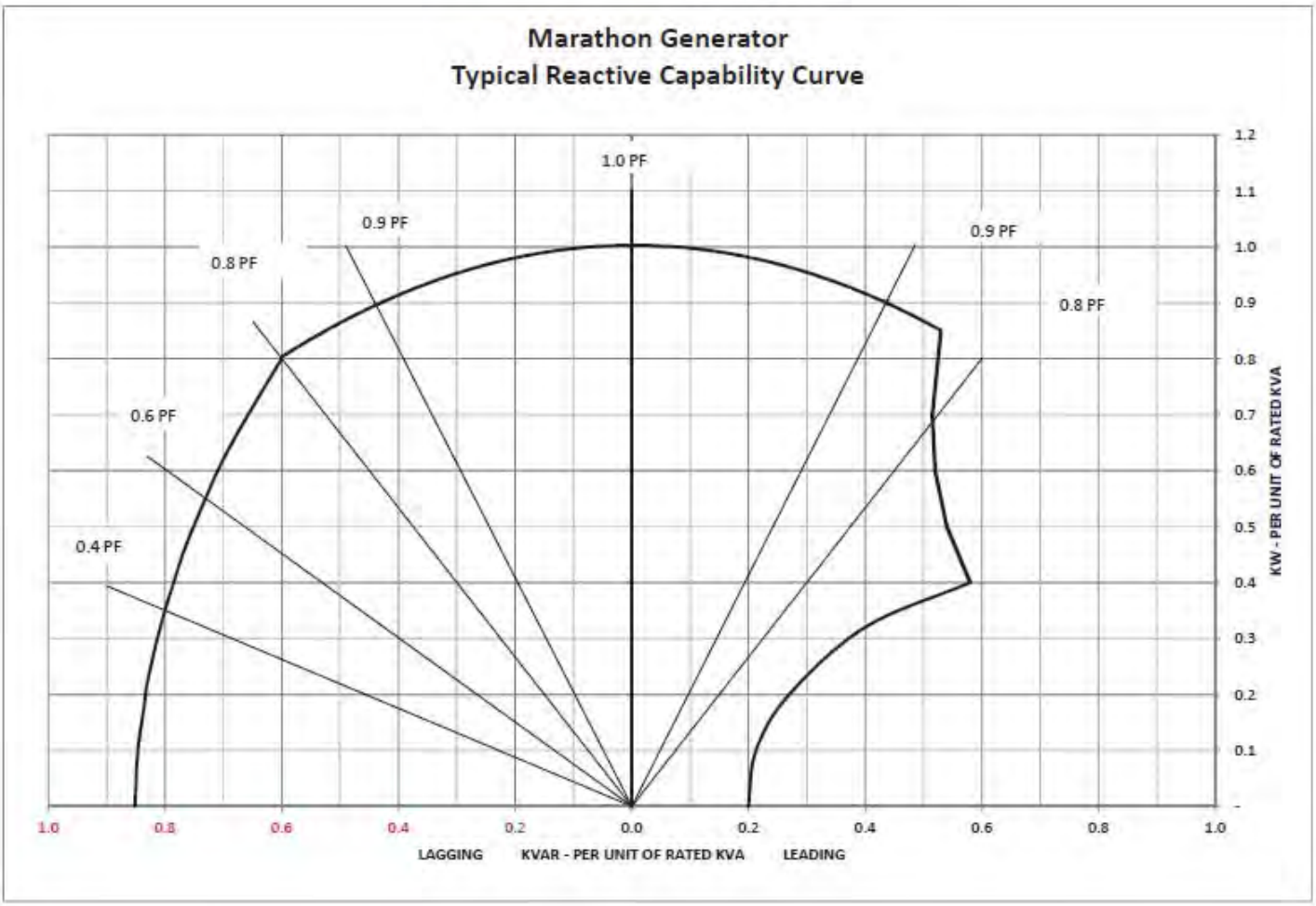

772244

C.G. DISTANCES REFERENCED FROM THIS POINT

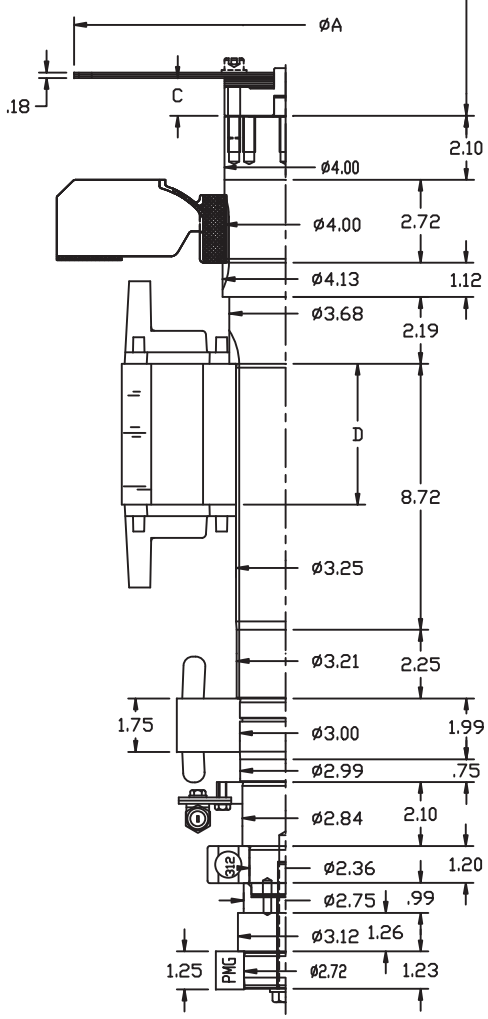

DASH	SAE DISC#	SAE ADAPTER NO.	SHAFT & HUB			DISCS & SPACERS			FAN			MAIN ROTOR			EXCITER			PMG ROTOR			TOTAL						UNBALANCED MAGNETIC PULL MAIN ROTOR	
			WGT	WK²	CG	WGT	WK²	CG	WGT	WK²	CG	WGT	WK²	CG	WGT	WK²	CG	WGT	WK²	CG	WGT	WK²	CG	A	C	D		
1	7.5	4	69	.7	10.67	4	.3	-.09	7	.7	3.32	111	12.6	11.07	18	.9	20.66	4	.1	29.03	213	15.3	11.08	9.50	.00	4.62	44	
2	8	3, 4	69	.7	10.67	5	.4	-1.33	7	.7	3.32	111	12.6	11.07	18	.9	20.66	4	.1	29.03	214	15.4	11.00	10.38	1.24	4.62	44	
3	10	2, 3, 4	69	.7	10.67	7	.9	-1.03	7	.7	3.32	111	12.6	11.07	18	.9	20.66	4	.1	29.03	216	15.9	10.89	12.38	.94	4.62	44	
4	11.5	1, 2, 3	69	.7	10.67	8	1.4	-.45	7	.7	3.32	111	12.6	11.07	18	.9	20.66	4	.1	29.03	217	16.4	11.39	13.88	.36	4.62	44	
5	7.5	4	69	.7	10.67	4	.3	-.09	7	.7	3.32	129	14.7	11.51	18	.9	20.66	4	.1	29.03	231	17.4	11.83	9.50	.00	5.50	53	
6	8	3, 4	69	.7	10.67	5	.4	-1.33	7	.7	3.32	129	14.7	11.51	18	.9	20.66	4	.1	29.03	232	17.5	11.75	10.38	1.24	5.50	53	
7	10	2, 3, 4	69	.7	10.67	7	.9	-1.03	7	.7	3.32	129	14.7	11.51	18	.9	20.66	4	.1	29.03	234	18.0	11.65	12.38	.94	5.50	53	
8	11.5	1, 2, 3	69	.7	10.67	8	1.4	-.45	7	.7	3.32	129	14.7	11.51	18	.9	20.66	4	.1	29.03	235	18.5	11.61	13.88	.36	5.50	53	
9	7.5	4	69	.7	10.67	4	.3	-.09	7	.7	3.32	159	18.1	12.26	18	.9	20.66	4	.1	29.03	261	20.8	12.25	9.50	.00	7.00	67	
10	8	3, 4	69	.7	10.67	5	.4	-1.33	7	.7	3.32	159	18.1	12.26	18	.9	20.66	4	.1	29.03	262	20.9	12.18	10.38	1.24	7.00	67	
11	10	2, 3, 4	69	.7	10.67	7	.9	-1.03	7	.7	3.32	159	18.1	12.26	18	.9	20.66	4	.1	29.03	264	21.4	12.08	12.38	.94	7.00	67	
12	11.5	1, 2, 3	69	.7	10.67	8	1.4	-.45	7	.7	3.32	159	18.1	12.26	18	.9	20.66	4	.1	29.03	265	21.9	12.05	13.88	.36	7.00	67	
13	7.5	4	69	.7	10.67	4	.3	-.09	7	.7	3.32	139	15.8	11.13	18	.9	20.66	4	.1	29.03	241	18.5	11.59	9.50	.00	6.00	57	2-18-2011
14	8	3, 4	69	.7	10.67	5	.4	-1.33	7	.7	3.32	139	15.8	11.13	18	.9	20.66	4	.1	29.03	242	18.6	11.52	10.38	1.24	6.00	57	2-18-2011
15	10	2, 3, 4	69	.7	10.67	7	.9	-1.03	7	.7	3.32	139	15.8	11.13	18	.9	20.66	4	.1	29.03	244	19.1	11.42	12.38	.94	6.00	57	2-18-2011
16	11.5	1, 2, 3	69	.7	10.67	8	1.4	-.45	7	.7	3.32	139	15.8	11.13	18	.9	20.66	4	.1	29.03	245	19.6	11.39	13.88	.36	6.00	57	2-18-2011
17	7.5	4	69	.7	10.67	4	.3	-.09	7	.7	3.32	169	19.2	11.88	18	.9	20.66	4	.1	29.03	271	21.9	12.01	9.50	.00	7.50	72	2-18-2011
18	8	3, 4	69	.7	10.67	5	.4	-1.33	7	.7	3.32	169	19.2	11.88	18	.9	20.66	4	.1	29.03	272	22.0	11.94	10.38	1.24	7.50	72	2-18-2011
19	10	2, 3, 4	69	.7	10.67	7	.9	-1.03	7	.7	3.32	169	19.2	11.88	18	.9	20.66	4	.1	29.03	274	22.5	11.85	12.38	.94	7.50	72	2-18-2011
20	11.5	1, 2, 3	69	.7	10.67	8	1.4	-.45	7	.7	3.32	169	19.2	11.88	18	.9	20.66	4	.1	29.03	275	23.0	11.82	13.88	.36	7.50	72	2-18-2011

NO.	REVISION	BY & DATE
2	REISSUE WITH PMG DETAIL SHOWN CN8757	DRS 8/31/1999
1	NEW DRAWING CN8757	DRS 5/14/1999

TOLERANCES UNLESS SPECIFIED

DEC.	INCHES
.X	± -
.XX	± -
.XXX	± -
.XXXX	± -
CHK ANG	± -

RFP

DIST

marathon electric

TITLE ROTOR WT & WK2
361 FR.-PLS-3Ø-4 POLE-STD G-PMG

MAT'L.

FINISH

CAD FILE 772244x1

DRAWN	DRS 5/14/1999
CHK	TM 5/14/1999
APPD	GK 5/14/1999
SCALE	1=4
REF	
FMF	
PREV	

SIZE B | DRAWING NO. 772244 | PAGE OF | REV. 2

THIS DRAWING IN DESIGN AND DETAIL IS OUR PROPERTY AND MUST NOT BE USED EXCEPT IN CONNECTION WITH OUR WORK ALL RIGHTS OF DESIGN AND INVENTION ARE RESERVED
THIS IS AN ELECTRONICALLY GENERATED DOCUMENT - DO NOT SCALE THIS PRINT

B-14000-902

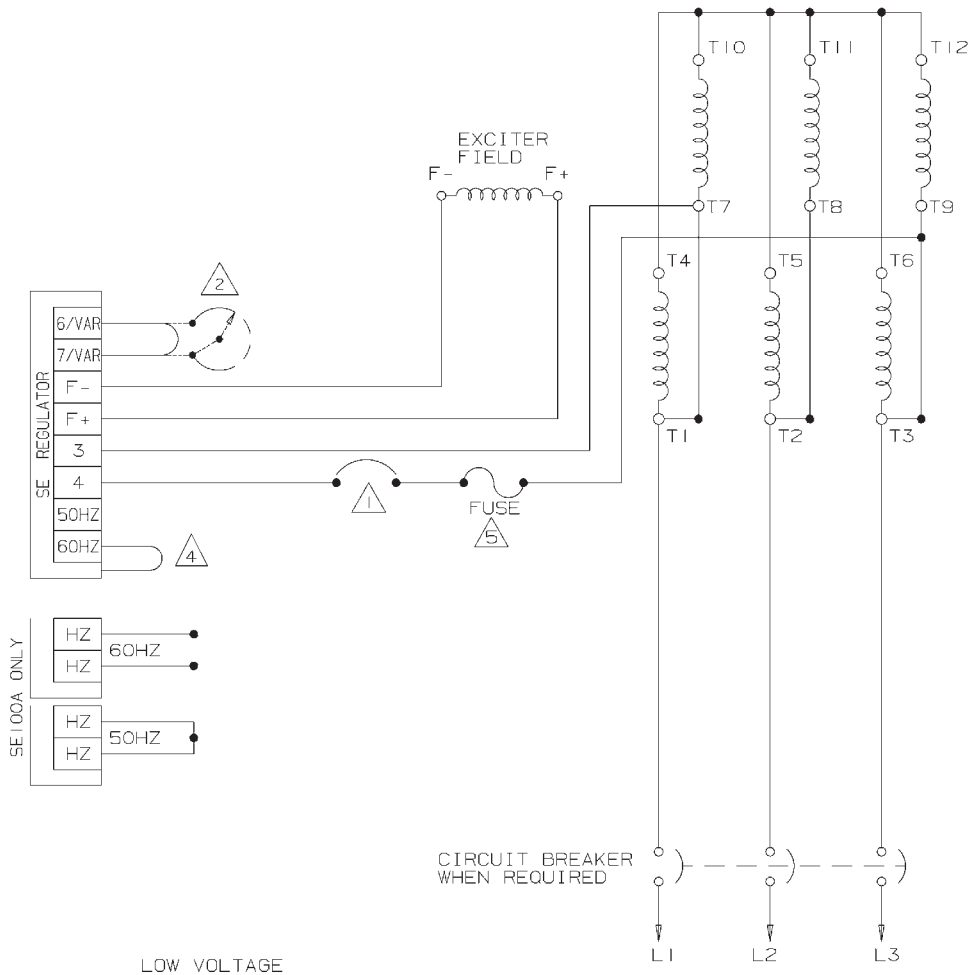

LOW VOLTAGE

TO LOAD

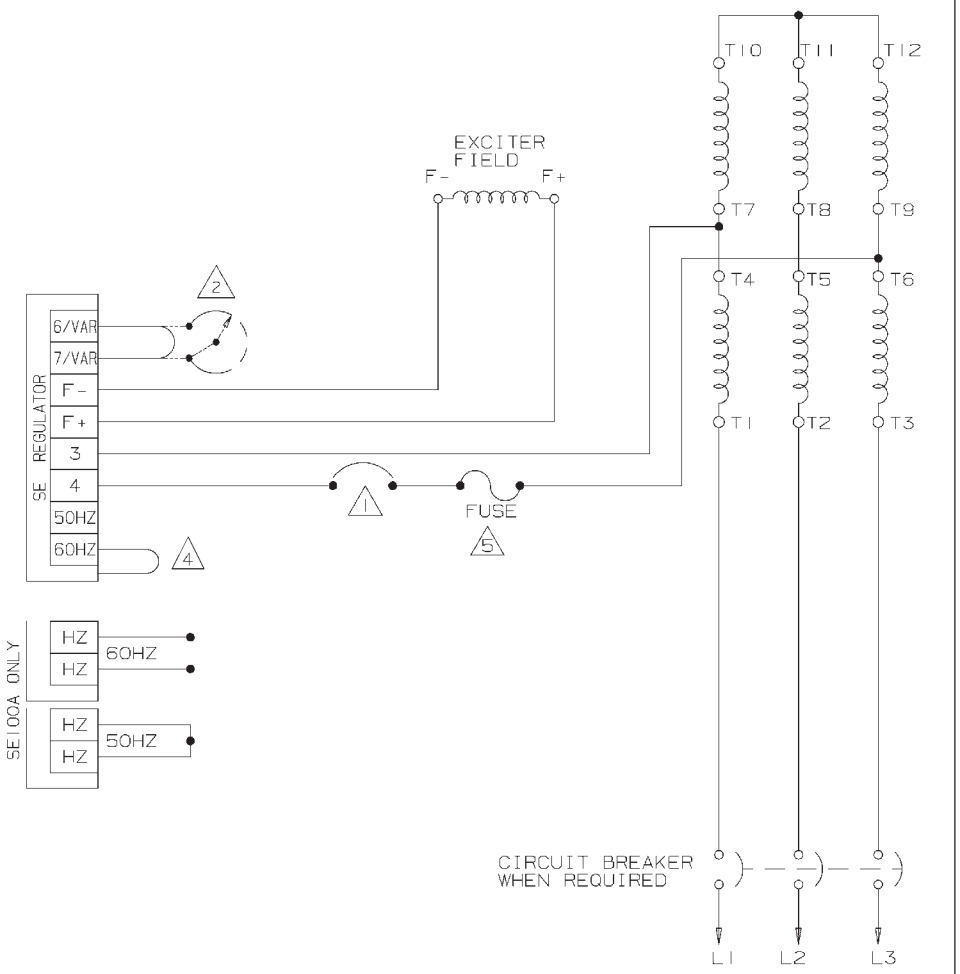

HIGH VOLTAGE

TO LOAD

NOTE:
1- FIELD CIRCUIT BREAKER OPTION.
2- IF A REMOTE VOLTAGE CONTROL IS REQUIRED CONNECT A POTENTIOMETER IN SERIES WITH VAR TERMINALS 6 & 7.
3- LOCATION OF TERMINALS ON DIAGRAM IS NOT AN INDICATION OF ACTUAL LOCATION.
4- USE JUMPER CONNECTION PROVIDED FOR 50HZ OR 60HZ OPERATION.
5- FOR SE350, FUSE IS INTERNAL TO REGULATOR

REV	DATE	CHANGE	NAME
7	09-29-2000	REMOVED VAR SPEC'S FROM NOTE #2 ADDED VAR TO DRAWING CN 7300-447	HLB
6	10-21-1996	ADDED SE350 REG. NOTE CN 7300-447	PGK
5	11-22-1993	SE MODEL CONVERSION PER CN 6758	KL

√ MAX. SURFACE ROUGHNESS UNLESS NOTED OTHERWISE

MATL SPEC

FINISH

UNLESS OTHERWISE SPECIFIED DIMENSIONS ARE IN INCHES
TOL. ON XX± XXX±.005 XXXX±.0005 ANGLES±

MARATHON ELECTRIC
WAUSAU, WISCONSIN 54401

DRAWN BY	PR	08-09-1990
CHKD BY	SG	08-10-1990
APPD BY	LS	08-10-1990

PART NAME CONNECTION DIAGRAM
SE REGLATOR STD 3 PHASE SER

DRWG NO B-14000-902

SHOP BOOK | PURCHASED | DISTRIBUTION - WA - LB - WP - LM - BR | CADD FILE NO. 14000-902

marathon™
Generators

PM300E

Voltage Regulator Instruction Manual

A Regal Brand

REGAL

1. INTRODUCTION

The PM300E voltage regulator is an encapsulated electronic voltage regulator which controls the output of a brushless AC generator by regulating the current into the exciter field.

Read And Save These Instructions
Before installing, using, or ser vicing this product, carefully read and fully understand the instructions including all warnings, cautions, and safety notice statements.

WARNING

Electrical Shock Hazard : Only qualified personnel who are trained in electrical safety practices should install or repair electrical generators and their accessories. Shaft rotation produces voltage in generators even when no excitation is applied. Do not open terminal box or touch unprotected terminals while the generator shaft is rotating. Failure to do so may cause serious injury or death to personnel.

2. SPECIFICATION

Sensing Input
Voltage 190 ~ 240V 50/60Hz

Power Input
Voltage 190 ~ 240V 250/300Hz

Output Power Continuous
63 VDC max at 3.0 ADC (190 W)

Exciter Field DC Resistance
15 to 100 ohm

Voltage Regulation
< ±1% (with 4% engine governing)

Voltage Build-up
Residual voltage at AVR terminal > 10VAC

Burden
500VA

External Volts Adjustment
±5% with 1000 ohm rheostat
±10% with 2000 ohm rheostat

EMI Suppression
Internal electromagnetic interference filtering

Under Frequency Protection
54 ~ 61 Hz for 60Hz Operation
45 ~ 51 Hz for 50Hz Operation

Unit Power Dissipation
Max. 8 watt

Surrounding air temperature
-40 ~ 60 °C

Storage temperature
-65 ~ 85 °C

Dimensions
99.5mm L * 67mm W * 47.5mm H

Weight
200g ± 2%

3. INSTALLATION

3.1 Mounting

The PM300E voltage regulator can be mounted in any plane. See Figure 1 for mounting dimensions.

3.2 Connections

See figure 3 for typical High Wye (416-480V) or Low Wye (208-240V) connections. For High Delta (240V) or 120/240V single phase Zig-Zag, use generator leads T7 & T9 for sensing inputs on regulator terminals E1 & E3/4. For 120V only connections, a step-up potential transformer with ratio 1:2 will be required: clearly identify required lead connections.

3.3 Fuse

4Amp 250V - 5 X 20 mm fuse is supplied with the regulator. Marathon Fuse Part No.: A-527066-1

4. ADJUSTMENT AND SETTING

4.1 Voltage Adjust

- The screwdriver adjustable potentiometer adjusts the generator output voltage. Adjustment clockwise increases the generator output voltage.

- When using a remote voltage adjust rheostat, remove the jumper wire across terminals 6 and 7 and install a 2000 ohm 1/2 watt (minimum) rheostat. (See Figure 3). This will give ±10% voltage variation from the nominal. (For ±5% voltage variation use a 1000 ohm 1/2 watt rheostat).

4.2 Stability Adjust

- The screwdriver adjustable potentiometer adjusts the system stability. Adjustment clockwise increases the stability. Increasing the stability increases the response time of the generator.

  Conversely, decreasing the stability decreases the response time of the generator.

- There are two small jumpers on the regulator. (See Figure 3).

4.3 V/HZ Roll-Off Frequency Selection

- Use jumper to select 50 Hz or 60 Hz. The screwdriver adjustable potentiometer sets the roll-off frequency from 54-61 Hz in the 60 Hz setting or from 45-51 Hz in the 50 Hz setting.

  The PM300E has the roll-off point preset to 58 Hz in the 60 Hz mode and 48 Hz in the 50 Hz mode. To change the roll-off point, adjust engine speed to the desired rated speed. (50 or 60 Hz). Set the voltage to the desired setting at rated speed. Adjust engine speed to the desired roll-off point. Turn the potentiometer counter-clockwise until the voltage starts to drop off. Then adjust the potentiometer clockwise until the voltage returns to rated.

  Re-adjust engine speed to rated speed.

5. START-UP PROCEDURE

5.1 Preliminary SET-UP

- Ensure the voltage regulator is correctly connected to the generator. Refer to the specific connection diagram supplied with the generator.

  Set the regulator voltage adjust to full counter-clockwise (minimum voltage level).

  Set the remote voltage adjust (if used) to the center position.

  Set the stability control full clockwise (maximum stability level).

- Connect the positive lead of a 100V D.C. voltmeter to F1 and the negative lead of the voltmeter to F2 or use an appropriate AC voltmeter on the generator output leads.

5.2 System START-UP

- Start and run the generator at no load and rated speed. The generator voltage should build up to a minimum level. (Actual level is dependent upon connection). If it does not build up, refer to the trouble shooting section of this manual.

- Slowly adjust the voltage control until the generator voltage reaches the nominal value. If used, adjust the remote voltage rheostat to set the generator voltage to the exact value desired.

- Turn the stability adjust counter-clockwise until instability is shown on either of the voltmeters mentioned in the "PRELIMINARY SET-UP" section. With the system operating in an unstable condition, slowly adjust the stability control clockwise until generator stability is reached.

  Interrupt regulator power for a short time (approximately 1-2 seconds).

- If the generator remains stable, no further adjustment is necessary. If the generator does not remain stable, increase the stability slightly and interrupt regulator power again.

  This procedure should be repeated until system stability is reached and maintained.

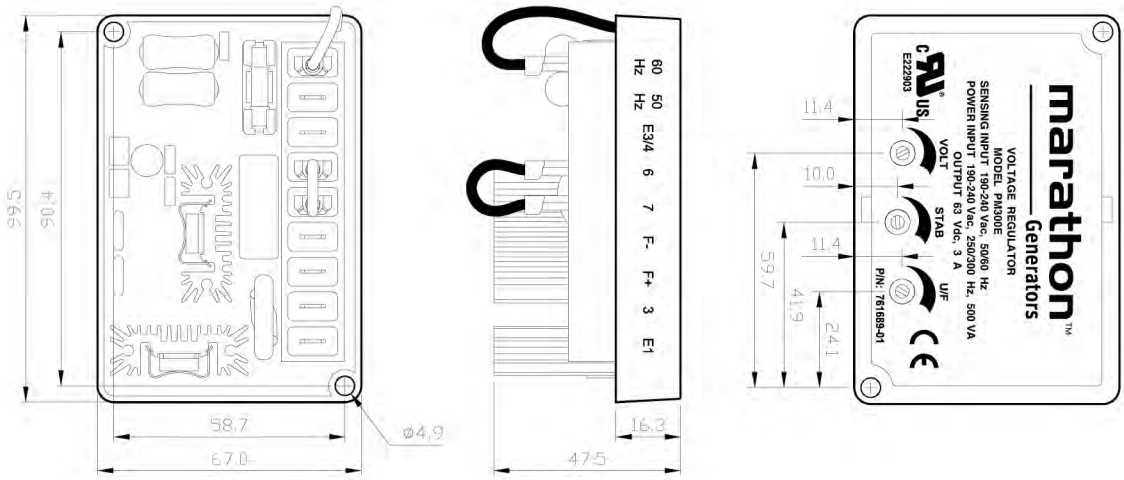

Figure 1 Outline and Drilling Diagram

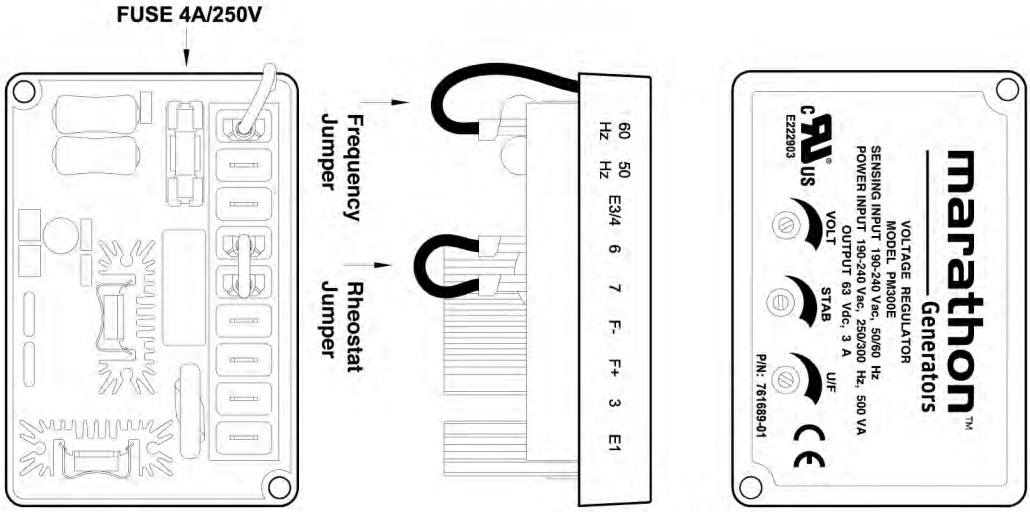

Figure 2 Jumper and Potentiometer Control Locations

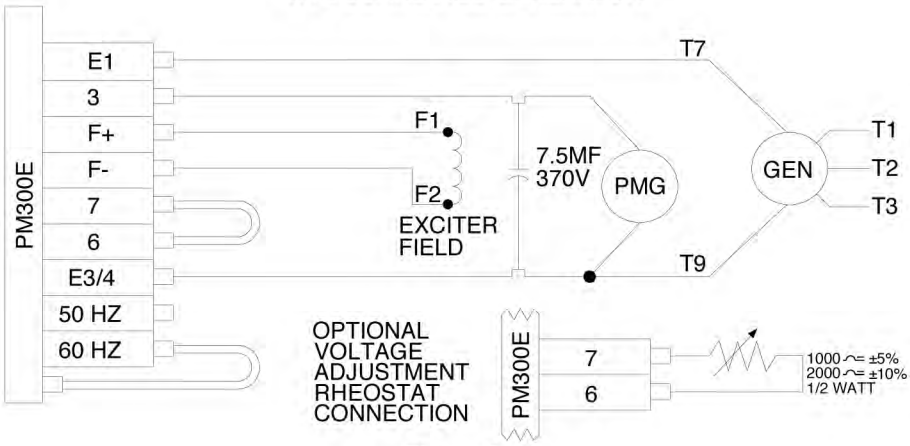

Figure 3

SYMPTOM	CAUSE	ACTION
Residual Voltage - No Output	No voltage at regulator power input wires.	Check wiring diagram for proper connections.
		Defective PMG.
		Shorted PMG capacitor.
	Field leads F1, F2 not connected.	Connect field leads F1, F2.
	Power input leads not connected.	Connect power input leads 3, 4.
	Blown or missing fuse.	Replace fuse.
	Defective regulator.	Replace regulator.
	Defective generator.	Consult generator manual.
Output Voltage Low	Incorrect connections.	Check wiring diagram for proper connections.
	Voltage adjust turned down.	Rotate voltage adjust CW until desired voltage is reached.
	Remote voltage adjust is turned down.	Rotate remote voltage adjust CW until desired voltage is reached.
	Defective regulator.	Replace regulator.
Output Voltage High	Voltage adjust turned too high.	Rotate voltage adjust CCW until desired voltage is reached.
	Remote voltage adjust is turned too high.	Rotate remote voltage adjust CCW until desired voltage is reached.
Output Voltage High - No Adjustment	Sensing leads not connected to 190 - 240 Volts.	Check wiring diagram for proper connection.
	Defective Regulator	Replace regulator.
Remote Voltage Adjust Operates Backwards	Voltage adjust wire backwards.	Reverse the wiring of the remote voltage adjust.
Generator Output Voltage Hunting	Stability adjust not set properly.	Rotate the stability adjust in a CW direction until hunting stops.
Poor Regulation	Meter is true RMS reading meter.	Regulator is average sensing. Use average reading meter.

* Use only original supplied spare protection fuse for fuse replacement.
* Please accept our sincere apology if any modification in performance, specification or appearance is made without prior notice.

Product data sheet
Characteristics

HDL36090C
MOLDED CASE CIRCUIT BREAKER 600V 90A

Main

Commercial Status	Commercialised
Product or component type	Molded Case Circuit Breaker
Range of product	PowerPact H
[In] rated current	90 A
Product certifications	IEC UL listed
[Ue] rated operational voltage	250 V DC 600 V AC
Mounting mode	Unit mount
Poles description	3P
Breaking capacity	20 kA 250 V DC 14 kA 600 V AC 18 kA 480 V AC 25 kA 240 V AC
[Ics] rated service short-circuit breaking capacity	100 %
Electrical connection	Lugs line 14...3/0 AWG aluminium/copper Lugs load 14...3/0 AWG aluminium/copper
Trip unit technology	Thermal-magnetic
Magnetic hold current	800 A
Magnetic tripping current	1450 A

Ordering and shipping details

Category	01110 - HD,JD UNIT MT BREAKER/SWITCH
Discount Schedule	DE2
GTIN	00785901054030
Nbr. of units in pkg.	1
Package weight(Lbs)	4.00
Returnability	Y
Country of origin	US

Contractual warranty

Period	18 months

The information provided in this documentation contains general descriptions and/or technical characteristics of the performance of the products contained herein.
This documentation is not intended as a substitute for and is not to be used for determining suitability or reliability of these products for specific user applications.
It is the duty of any such user or integrator to perform the appropriate and complete risk analysis, evaluation and testing of the products with respect to the relevant specific application or use thereof.
Neither Schneider Electric Industries SAS nor any of its affiliates or subsidiaries shall be responsible or liable for misuse of the information contained herein. *Prices are indicative

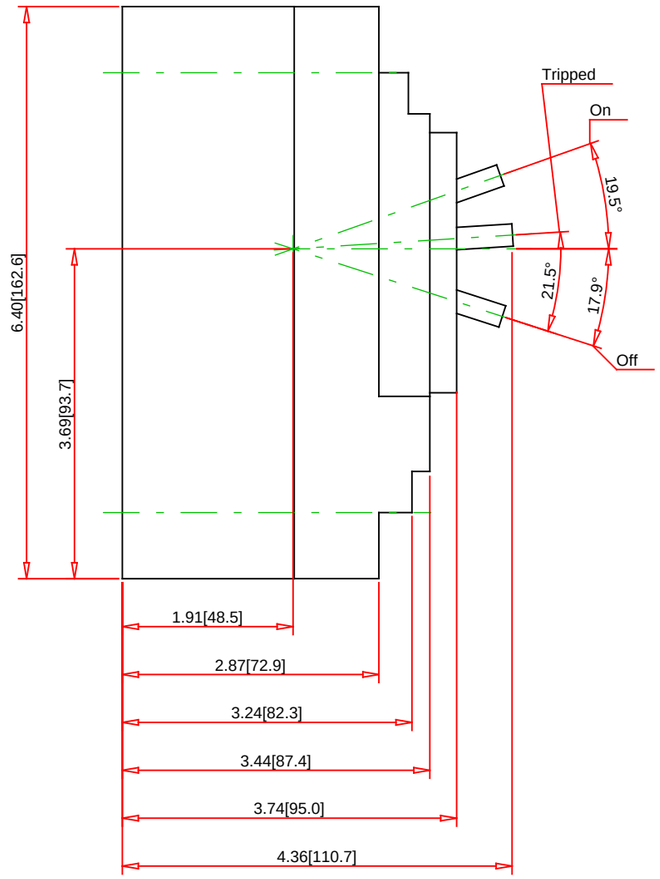

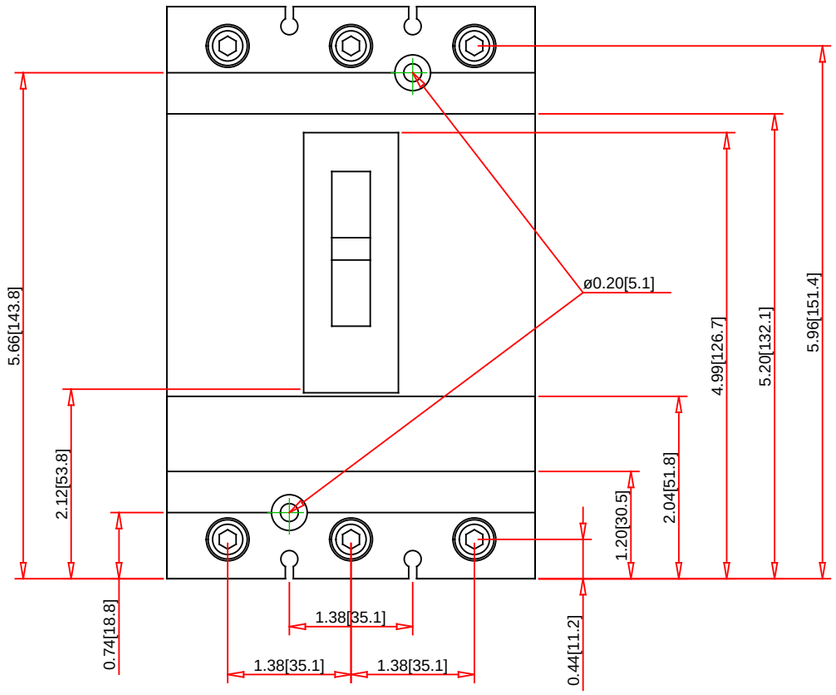

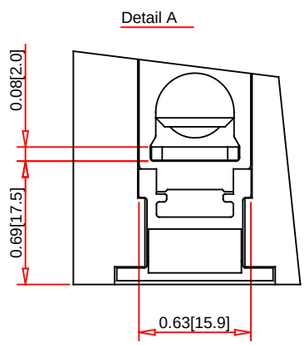

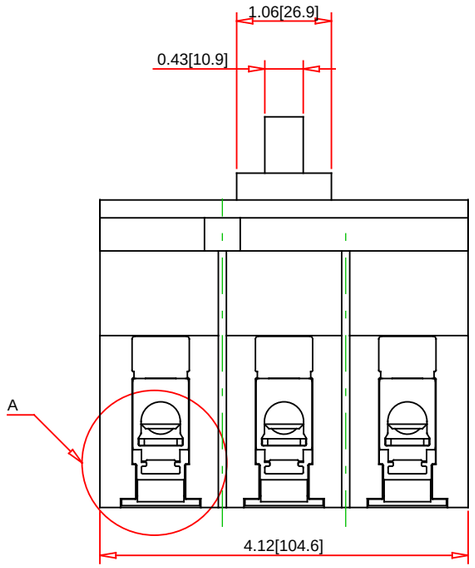

Note:
- Drawings Not To Scale
- Drawings Subject to Change Without Notice
- Dimensions are inches next to [Millimeters]

Part No.:

HDL36090C

SQUARE D by Schneider Electric

United States Corporate Headquarters
Schneider Electric USA
1415 South Roselle Road
Palatine, IL 60067
Customer Care Center : 1-888-778-2733
Web : www.schneider-electric.us

Technical Information:

General Application:	Provides overload and short circuit protection
For Use With:	Industrial Enclosures and Switchboards
Approvals:	UL Listed - CSA Certified - IEC Rated
Mounting Type:	Unit Mount
Terminal Type:	Line: Lug - Load: Lug
Wire Size:	#14-3/0 AWG(Al/Cu)
Weight:	5 Pounds
Depth:	4.36 Inches
Height:	6.40 Inches
Width:	4.12 Inches

Specification:

Description:	PowerPact H-frame Thermal Magnetic Circuit Breaker
Number of Poles:	3-Pole
Ampere Rating:	90A
Voltage Rating:	600VAC/250VDC
Interrupting Rating:	25kA at 240VAC - 18kA at 480VAC - 14kA at 600VAC - 20kA at 250VDC
Circuit Breaker Rating:	100% Rated
Fixed AC Magnetic Trip:	Hold: 800A - Trip: 1450A

Figure 58: H-Frame 70–100 A (HD, HG, HJ, and HL) Thermal-Magnetic Trip

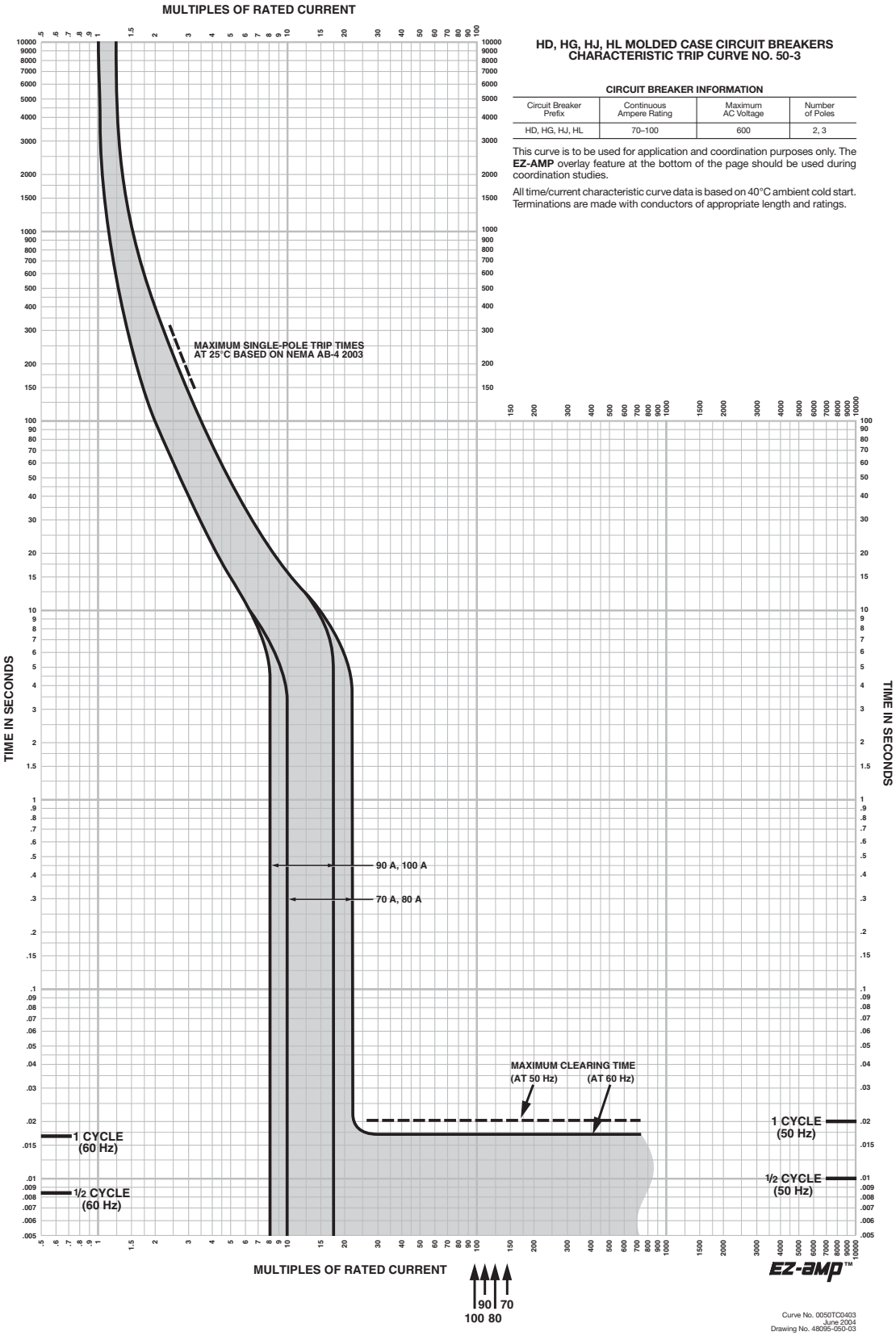

© 2011–2013 Schneider Electric
All Rights Reserved

COMMERCIAL BATTERY
Data Sheet

Extra ruggedness and resistance to vibration, heat, chemicals, and physical abuse are built into every commercial battery that MTU Onsite Energy provides with their generator sets. The battery design features the latest in power storage technology for lead-acid batteries, as well as incorporates proven designs developed with the most experience in the business.

PRODUCT FEATURES

- Case Design: Tough, high-impact reinforced polypropylene case is heat sealed under extreme pressure to withstand heavy commercial service usage. This helps to prevent electrolyte leakage, improves reliability, and reduces breakage.
- Internal Design: Full-frame power path grids avoid sharp wires protruding through separators and directs the power straight to the lug for low resistance and higher cranking amps.
- Terminals: Standard terminals are solidly built preventing porosity, corrosion, black post, and harmful acid leaks.
- Power Density: Extra heavy-duty batteries deliver more cranking amps per pound.
- Maintenance: The battery uses pure de-mineralized electrolytes for reduced water loss, reduced gassing, longer battery life, and low maintenance.
- Reliability: Narrow ribs reduce separator corrosion to protect against shorts while deep-pocket envelopes dramatically improve reliability and extend service life.
- Quality: Over 250 quality control checks, combined with computer-aided design technology, provide a tough, durable battery in each commercial battery that MTU Onsite Energy provides with their generator sets.

						Overall Dimension			
BCI Group Size	Terminal Type	MTU Onsite Energy Part Number	Volt	Cranking Performance	Reserve Capacity	Length	Width	Height	Weight (Wet)
				CCA (Cold Cranking Amps) -18° C / 0° F		mm (in)	mm (in)	mm (in)	kg (lbs)
31	Post	SUA120299	12	950	175	330 (13)	171 (6.75)	241 (9.5)	25.7 (56.5)

© MTU Onsite Energy. Subject to alteration due to technological advances. 2015-01

BATTERY CHARGER
2608A Data Sheet

FEATURES
- Watertight, shock and corrosion resistant
- Short circuit and thermal protection
- LED status indicator
- Reverse polarity protection

DESCRIPTION
The 2608A battery charger is designed to recharge batteries as well as extend the battery's life in applications where it is stored for long periods of time. This charger is "3-stage" electronic, completely automatic, and lightweight. Unlike automotive trickle chargers, the 2608A will not overcharge batteries. The visible red and green LED lights on the charger faceplate allow for easy operation.

SPECIFICATIONS
- MTU Onsite Energy Part #: SUA79100
- Output Volts: 12 Volts
- Output Amps: 6 Amps
- Load Banks: 1 Bank
- DC Cable Length: 1219.2 mm (48 in)
- Dimensions (L x W x H): 88.9 mm (3.5 in) x 162.56 mm (6.4 in) x 57.15 mm (2.25 in)
- Input Volts: 115 VAC - 50/60 Hz
- Input Amps Max: 2 Amps

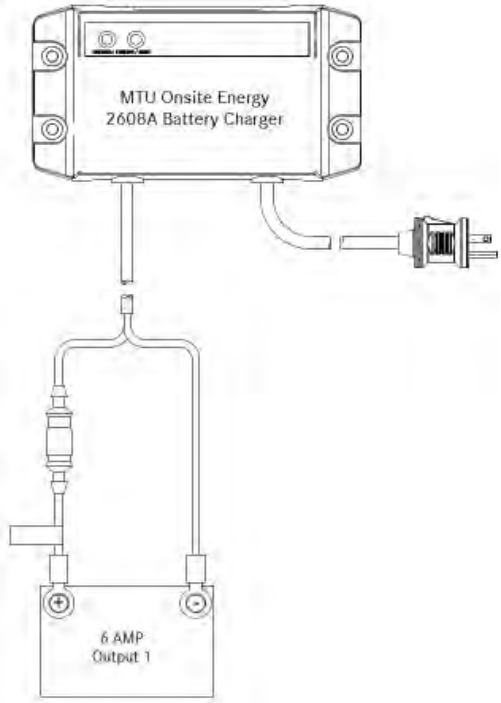

2608A Battery Charger Schematic

© MTU Onsite Energy. Subject to alteration due to technological advances. 2014-08

WATER HEATER
TPS Series Data Sheet

The TPS engine preheater is designed to preheat diesel and gas engines in generator set applications. Simple to install and very lightweight, the TPS engine preheater features a built-in thermostat and heats engines with up to 12L displacement. Thermosiphon circulation of the coolant delivers heat throughout the entire engine.

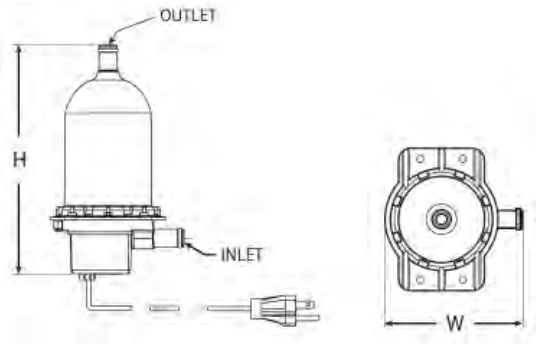

CERTIFICATIONS AND STANDARDS

- c-UL-us Listed

SPECIFICATIONS

Height:	200 mm (7.9 in)
Width:	117 mm (4.6 in)
Weight:	771 g (1.7 lb)
Heating Fluid:	Engine coolant (50% glycol/50% water)
Power:	0.5, 1.5, 1.8 and 2 kW (2 kW available at 240 V only)
Voltage Range:	120 and 240 V
Tank Material:	Polyphenylene Sulfide (PPS)
Heating Element:	Incoloy 800
Enclosure:	IP41
Fluid Capacity:	416 cm^3 (0.11 gal)
Max Pressure:	6.2 bar (90 psi)
Inlet / Outlet:	15.9 mm (0.625 in)
Thermostat Range:	
On	38 °C (100 °F)
Off	49 °C (120 °F)

Model Number	MTU Onsite Energy Part Number	Watts	Volts	Phase	Hz	Amps
TPS151GT10-000	SUA52748	1,500	120	1	60	12.5

© MTU Onsite Energy. Subject to alteration due to technological advances. 2015-05

ENCLOSURE AND SOUND DATA SHEET - DIESEL
60 Hz: 30-60 kW Standby

Level 1 Enclosure (pictured)*

ENCLOSURE LEVEL IDENTIFICATION	
Level 1	Basic weather-protective enclosure constructed of heavy gauge steel or aluminum with fixed stormproof panels designed for 190 mph wind load rating. Skid-mounted enclosure consists of a bolted and welded construction with unit-mounted internal silencer. Hinged, lockable double-door access on both sides of the enclosure.

CERTIFICATIONS AND STANDARDS

- UL 2200

STANDARD FEATURES FOR ALL LEVELS

- Heavy material construction
  - Steel Enclosure: 1.9 mm (0.075 in) - 14 gauge or greater thickness
  - Aluminum Enclosure: 2.3 mm (0.09 in) or greater thickness
- 190 mph wind rating
- Service access
  - Double door access gives ease of service to all components
- Pitched roof
- Rain shroud and rain cap
- Rodent barriers
- Exhaust scoop access panel and drain
- Hardware
  - Powder coated hinges with stainless steel pins
  - Key-lockable and pad-lockable powder coated door handles
- Powder Coat Finish Paint: ANSI 61 Grey standard
  - Custom colors available upon request
- Internal silencer
  - Internally-insulated space saver design
  - Level 1: Industrial Grade

ENCLOSURE AND SOUND DATA SHEET - DIESEL
60 Hz: 30-60 kW Standby

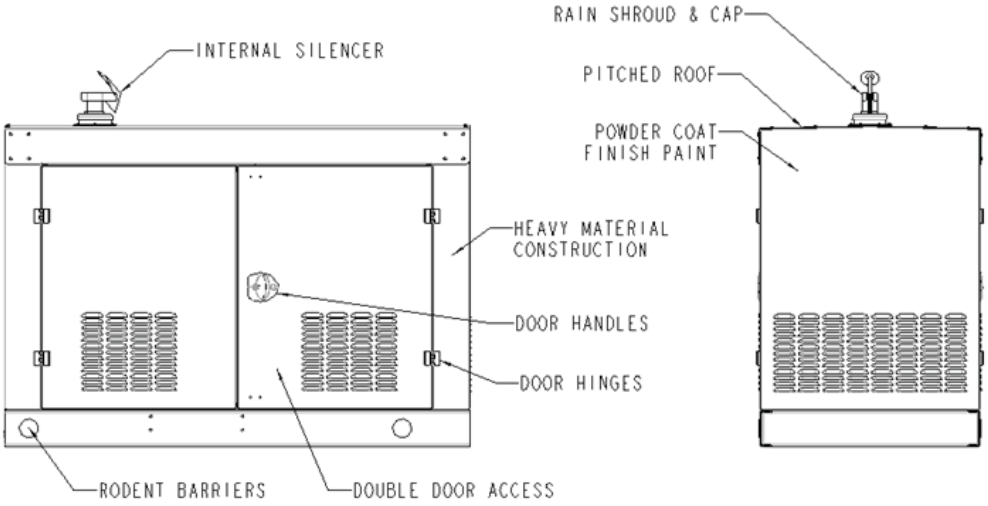

Level 1 Enclosure (pictured)*

ENCLOSURE AND SOUND DATA SHEET - DIESEL
60 Hz: 30-60 kW Standby

ENGINE EXHAUST SOUND RATINGS dB(A) AT 1 METER
OPU SOUND RATINGS dB(A) AT 1 METER
ENCLOSURE SOUND RATINGS dB(A) AT 7 METERS

			1 Meter		7 Meters		
Application	**Model**	**Power Node**	**Engine Exhaust (1)**	**OPU**	**Level 1**	**Level 2**	**Level 3**
60 Hz Standby							
	MTU 4R0113 DS50	50 kW	105.1		78.2		

(1) Undampened engine exhaust noise

NOTE:

- Measurements with infinite exhaust connection
- Aluminum enclosure sound levels are approximately 2 dB(A) higher than listed sound levels for steel enclosures
- Sound pressure levels subject to instrumentation, measurement, installation, and generator set variability
- Sound power levels per ISO 8528-10 and ANSI S1.13-2005
- Sound data measured with:
  - Full-rated load
  - Standard radiator package

C/F = Consult Factory

* **Note**: Visual appearance may differ between power nodes.

© MTU Onsite Energy. Subject to alteration due to technological advances. 2016-08

FUEL SYSTEM
Sub-Base Tank Data Sheet

MTU Onsite Energy's sub-base fuel tanks are manufactured and listed per UL142 and ULC-S601 standards for steel above-ground tanks. These certifications assure that our tanks meet the structural and mechanical integrity requirements for mounting generator sets directly on top, providing our customers with a safe and efficient fuel storage system. These tanks are suitable for above-ground storage of non-corrosive, stable, flammable, or combustible liquids that have a specific gravity not exceeding that of water. They are intended for installation and use in accordance with the codes referenced in the *Certifications and Standards* section. The secondary containment construction consists of a steel tank within a closed steel containment dike that is capable of being monitored for leakage.

STANDARD FEATURES

- Fuel fill drop tube
- Normal vent
- Emergency vent
- Manual fill
- Lockable fill cap
- Level alarm
- Basin drain (plugged)
- Removable supply and return dip tubes
- Leak detection
- Black paint finish
- Secondary containment
- Electrical stub-up area: Provides space for generator set electrical connections and internal wiring capabilities
- Baffles: Separates cold engine supply fuel from hot returning fuel (additional baffling as required for structural integrity)
- Fuel level gauge: A direct-reading fuel level gauge with electric sender

OPTIONAL FEATURES

- High fuel pre-alarm and low fuel level shutdown

CERTIFICATIONS AND STANDARDS

United States

- UL 142
- NFPA 30
- NFPA 37
- NFPA 110
- International Fire Code

www.mtuonsiteenergy.com

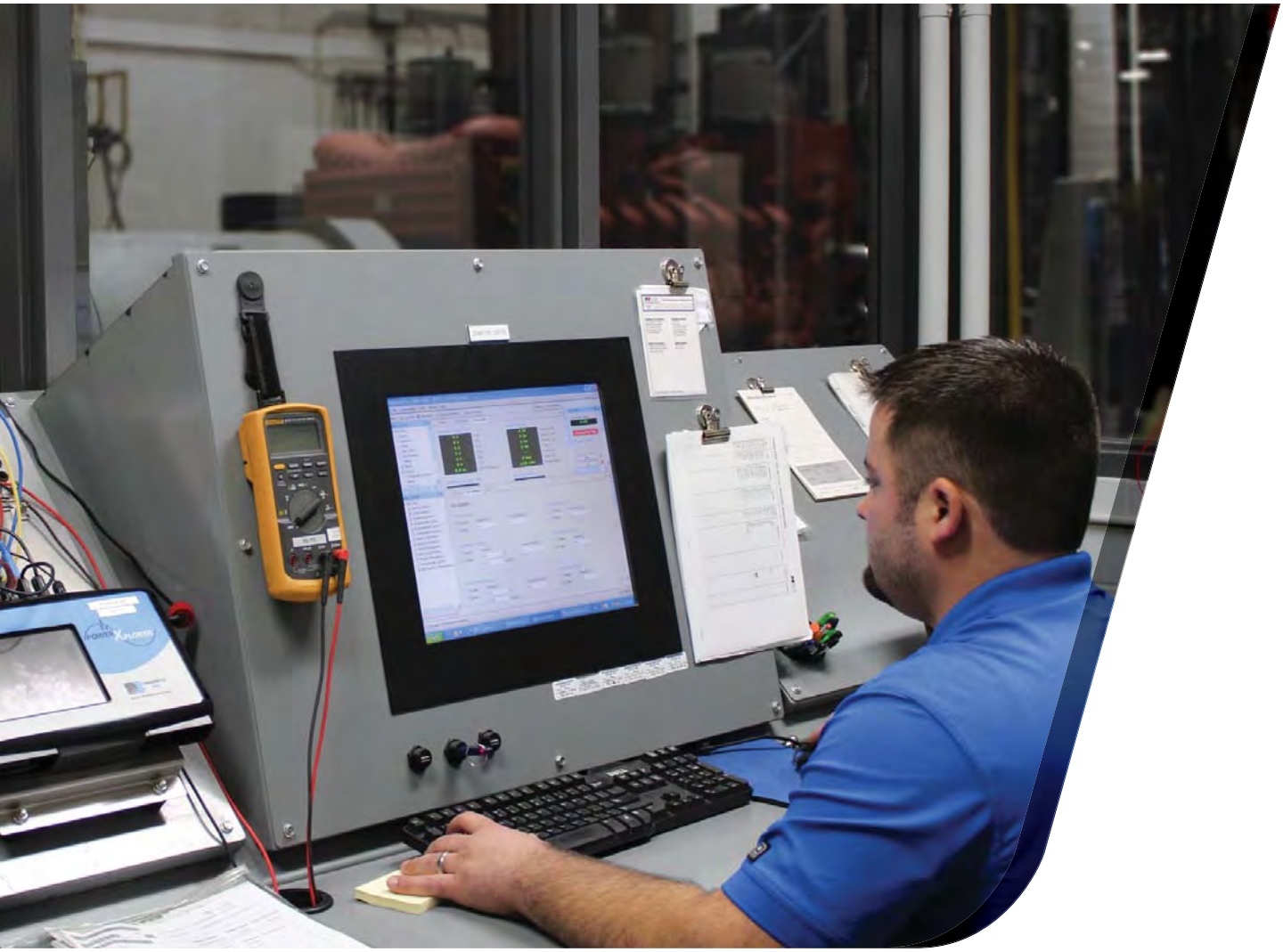

PERFORMANCE ASSURANCE
CERTIFICATION

PROTOTYPE TEST PROCEDURES AND METHODS

MTU Onsite Energy has been producing superior engine-generator sets for more than six decades. We understand the importance of reliable cost-effective products, and have developed industry-leading test procedures to ensure we exceed this criteria. Our testing program confirms that our customers will receive products of the highest quality.

The Performance Assurance Certification provided by MTU Onsite Energy certifies that every engine-generator set undergoes rigorous prototype testing including the following:

Prototype test procedures

// **Rated Load** (NFPA 110)
MTU Onsite Energy certifies that all engine-generator set models will produce the name-plated load within the design tolerance of the generator set.

// **Extended-run Testing**
MTU Onsite Energy certifies that all engine-generator set prototypes have been subjected to extended run-time testing.

// **Transient Response Analysis** (ISO 8528-5)
MTU Onsite Energy certifies that all new generator set models have undergone transient response analysis per ISO 8528-5.

// **Torsional Analysis**
MTU Onsite Energy certifies that all engine-generator-set models have undergone torsional stress analysis.

// **Engine Cooling System**
MTU Onsite Energy certifies that all generator set models will cool sufficiently within the ambient design conditions per each model.

// **Anticipatory Alarms and Shutdowns**
MTU Onsite Energy certifies that the pre-alarms and alarms function appropriately to protect the engine-generator set from any foreseen unnecessary failures.

// **Vibrational Analysis** (ISO 8528-9)
MTU Onsite Energy certifies that all new engine-generator-set models have undergone vibration analysis to ensure that each engine-generator coupling is balanced and that there is no destructive resonant vibration.

// **Noise Analysis** (ISO 8528-10)
MTU Onsite Energy certifies that all engine-generator sets undergo airborne noise analysis using the enveloping surface method.

Test standards

MTU Onsite Energy engine-generator sets are compliant with many different codes and standards. MTU Onsite Energy's validation philosophy and performance are regularly reviewed to ensure continuity with these codes and standards: *UL2200, CSA, EPA, NFPA 99–Health Care Facilities, NFPA 70–National Electrical Code, NFPA 110–Standard for Emergency and Standby Power Systems, Department of Labor and Industry, NEMA MG 1–Motors and Generators, and MIL-STD-705-c.*

FACTORY ACCEPTANCE TESTING PROCEDURES

MTU Onsite Energy's factory testing is performed with the same extreme diligence and attention to detail that is given to the prototype testing process. Every engine-generator set receives a complete factory acceptance test that certifies and ensures that the set will function in accordance to every specific application.

Test metering will have an accuracy of 1.3% or better. This metering is calibrated a minimum of once per year and is directly traceable to the Bureau of Standards.

Factory acceptance testing procedures:

// **Insulation Resistance Inspection** (301.1c)*
// **High Potential Test** (302.1b)*
// **Alternator Overspeed** (1 min.)*
// **Engine Inspection**
// **Generator Inspection**
// **Resistances Inspection** (401.1b)
- Exciter Field Stator
- Alternator Armatures

// **Mounting and Coupling Inspection**
// **Engine Fuel Oil System Inspection**
// **Engine Lube Oil System Inspection**
// **Engine Cooling System Inspection**
// **DC Charging System Inspection**
// **Circuit Breaker Inspection**
// **Anticipatory Alarms and Shutdowns Inspection** (505.2b, 515.1b, 515.2b)
// **Optional Equipment Inspection** (513.2a)
// **Load Test Inspection**
- Full Name-plate Rated Load
- Regulator Range Test (511.1d)
- No Load Inspection
- MAX Load @ 1.0 P.F. (640.1d)
- MAX Load @ 0.8 P.F.
- Block Loads @ 0-25%, 0-50%, 0-75%, 0-100%

// **Phase Balance and Sequence Inspection** (507.1d, 508.1d, 516.1a)

* Performed by Alternator OEM

Rating Tolerance

MTU Onsite Energy certifies that all generator set models will produce the name-plated load at the standard conditions within the design tolerance (see table below) of the generator set.

Diesel Genset Product Family	Rating Tolerance
MTU 3R0096 DS30 to MTU 6R0120 DS200	+/- 5%

	UNITED STATES ENVIRONMENTAL PROTECTION AGENCY **2016 MODEL YEAR** **CERTIFICATE OF CONFORMITY** **WITH THE CLEAN AIR ACT**	**OFFICE OF TRANSPORTATION** **AND AIR QUALITY** **ANN ARBOR, MICHIGAN 48105**

Certificate Issued To: Deere & Company (U.S. Manufacturer or Importer) **Certificate Number: GJDXL04.5141-005**	**Effective Date:** **07/24/2015** **Expiration Date:** **12/31/2016**	**Byron J. Bunker, Division Director** **Compliance Division**	**Issue Date:** **07/24/2015** **Revision Date:** **N/A**

Model Year: 2016 **Manufacturer Type:** Original Engine Manufacturer **Engine Family:** GJDXL04.5141	**Mobile/Stationary Indicator:** Stationary **Emissions Power Category:** 56<=kW<75 **Fuel Type:** Diesel **After Treatment Devices:** No After Treatment Devices Installed **Non-after Treatment Devices:** Smoke Puff Limiter, Non-standard Non-After Treatment Device Installed, Engine Design Modification

Pursuant to Section 111 and Section 213 of the Clean Air Act (42 U.S.C. sections 7411 and 7547) and 40 CFR Part 60, and subject to the terms and conditions prescribed in those provisions, this certificate of conformity is hereby issued with respect to the test engines which have been found to conform to applicable requirements and which represent the following engines, by engine family, more fully described in the documentation required by 40 CFR Part 60 and produced in the stated model year.

This certificate of conformity covers only those new compression-ignition engines which conform in all material respects to the design specifications that applied to those engines described in the documentation required by 40 CFR Part 60 and which are produced during the model year stated on this certificate of the said manufacturer, as defined in 40 CFR Part 60.

It is a term of this certificate that the manufacturer shall consent to all inspections described in 40 CFR 1068 and authorized in a warrant or court order. Failure to comply with the requirements of such a warrant or court order may lead to revocation or suspension of this certificate for reasons specified in 40 CFR Part 60. It is also a term of this certificate that this certificate may be revoked or suspended or rendered void *ab initio* for other reasons specified in 40 CFR Part 60.

This certificate does not cover engines sold, offered for sale, or introduced, or delivered for introduction, into commerce in the U.S. prior to the effective date of the certificate.

JOHN DEERE EMISSION TEST DATA 4045TF280 63kW@1800rpm*

ENGINE SPEED - RPM	1800	1800	1800	1800	1800
EXH ELBOW - C	534.3	477.8	383.5	268.3	196.5
OBSV TORQUE - Nm	334.1	250.8	167.1	83.4	33.5
OBSV BRAKE POWER - kW	62.97	47.27	31.49	15.73	6.32
WET EXH FLOW @ ELBOW -m^3/min	13.59	11.78	9.18	0	0
CBM CO2 - kg/h	46.2	36.2	25	14.4	9.2
CBM CO2 - g/kWh	733.3	766.3	795	918.6	1449.6
CBM CO - g/h	59.2	34.2	31.3	28.7	25.2
CBM CO - g/kWh	0.94	0.72	1	1.83	3.98
CBM HC - g/h	10.7	10.2	9.4	7.9	8
CBM HC - g/kWh	0.17	0.21	0.3	0.5	1.26
CBM NOX - g/h	315.2	184.9	120	70.6	50.5
CBM NOX - g/kWh	5	3.91	3.81	4.49	7.98
CBM NOX+HC - g/h	325.8	195.1	129.3	78.5	58.4
CBM NOX+HC - g/kWh	5.17	4.13	4.11	4.99	9.24
PM MFM TOTAL - g/h	19.21	11.86	4.22	4.31	5.18
PM MFM TOTAL - g/kWh	0.305	0.251	0.134	0.274	0.819

* The emission data listed is measured from a laboratory test engine according to the test procedures of 40 CFR 89 or 40 CFR 1039, as applicable. The test engine is intended to represent nominal production hardware, and we do not guarantee that every production engine will have identical test results. The family parent data represents multiple ratings and this data may have been collected at a different engine speed and load. Emission results may vary due to engine manufacturing tolerances, engine operating conditions, fuels used, or other conditions beyond our control.

This information is property of Deere & Company. It is provided solely for the purpose of obtaining certification or permits of Deere powered equipment. Unauthorized distribution of this information is prohibited

CERTIFICATE OF COMPLIANCE

Certificate Number	20140815-AU3559
Report Reference	AU3559-20020610
Issue Date	2014-AUGUST-15

Issued to:	MTU ONSITE ENERGY CORP 100 POWER DR MANKATO MN 56001
This is to certify that representative samples of	ENGINE GENERATORS See Addendum Page
	Have been investigated by UL in accordance with the Standard(s) indicated on this Certificate.
Standard(s) for Safety:	UL 2200, Stationary Engine Generator Assemblies
Additional Information:	See the UL Online Certifications Directory at www.ul.com/database for additional information

Only those products bearing the UL Listing Mark should be considered as being covered by UL's Listing and Follow-Up Service.

The UL Listing Mark generally includes the following elements: the symbol UL in a circle: with the word "LISTED"; a control number (may be alphanumeric) assigned by UL; and the product category name (product identifier) as indicated in the appropriate UL Directory.

Look for the UL Listing Mark on the product.

William R. Carney

William R. Carney, Director, North American Certification Programs

UL LLC

Any information and documentation involving UL Mark services are provided on behalf of UL LLC (UL) or any authorized licensee of UL. For questions, please contact a local UL Customer Service Representative at www.ul.com/contactus

CERTIFICATE OF COMPLIANCE

Certificate Number 20140815-AU3559
Report Reference AU3559-20020610
Issue Date 2014-AUGUST-15

This is to certify that representative samples of the product as specified on this certificate were tested according to the current UL requirements.

Stationary engine generator assemblies (diesel fueled) for outdoor use and Indoor Use, models as follows:

Model Series 25 - 415, followed by any of the following letters (R,P,J,N,G,D), followed by J, followed by C or S, followed by 6, followed by D, followed by T, followed by 3 or 4. May have additional prefix or suffix letters or numbers.

Model Series D, followed by S or P, may be followed by two or three zeroes, followed by a number ranging from 20-415, followed by D, followed by 6, followed by C or S, followed by one of the following letters (R,P,J,N,G,D), followed by A, W, N, or T, followed by K, followed by 0, followed by 57 or 66, followed by 3 or 4. May have additional prefix or suffix letters or numbers.

Models D, followed by G, followed by 04, 05, or 06, followed by R, followed by J, followed by a three digit number. May be have additional prefix or suffix letters or numbers.

Models 4, 5, or 6, followed by R, followed by a four digit number, followed by D, followed by S, followed by a number ranging from 25 to 415. May have additional prefix or suffix letters or numbers

William R. Carney

William R. Carney, Director, North American Certification Programs

UL LLC

Any information and documentation involving UL Mark services are provided on behalf of UL LLC (UL) or any authorized licensee of UL. For questions, please contact a local UL Customer Service Representative at www.ul.com/contactus

STANDBY LIMITED WARRANTY
Two (2) Year / 3,000 Hour Basic

LIMITED WARRANTY

Your MTU Onsite Energy product has been manufactured and inspected with care by experienced craftspeople. If you are the original consumer, MTU Onsite Energy warrants, for the limited warranty period indicated below, each product will be free from defects in materials and workmanship, and will perform under normal use and service from valid start-up performed by MTU Onsite Energy. This Limited Warranty shall apply only when the product has been properly installed, serviced, and operated in accordance with the applicable MTU Onsite Energy instruction manuals. If this Limited Warranty applies, the liability of MTU Onsite Energy shall be limited to the replacement, repair, or appropriate adjustment of the product, at MTU Onsite Energy's option. This Limited Warranty does not apply to malfunctions caused by normal wear and tear, or by damage, unreasonable use, misuse, repair, or service by unauthorized persons.

LIMITED WARRANTY PERIOD

Engine Generator Set: Parts and labor for twenty-four (24) months will begin with the first commissioning of the product(s). In all cases, the warranty period will expire not later than thirty-six (36) months from the date of shipment ex-works MTU Onsite Energy or after 3,000 operation hours, whichever occurs first. Accessories: Parts and labor for one (1) year from date of shipment. For a description of accessories and items excluded from this Limited Warranty, review the listings below.

LIMITED WARRANTY CONDITIONS

Before there is any protection under this Limited Warranty, the distributor must: (1) complete the MTU Onsite Energy Warranty and the Start-Up Validation and Pre-Inspection form, and return them to MTU Onsite Energy within 60 days of the start-up date, and (2) complete the engine registration form and return it to the manufacturer as stated in the instructions with engine registration form (when applicable). In addition, this Limited Warranty is not valid or enforceable unless: (1) all supporting maintenance records are kept on file with the end user and made available upon request from factory, (2) the generator set is routinely exercised in accordance with operating instructions, and (3) the installation meets the general guidelines, standards, recommendations (as laid out in the Installation Guide provided with the product), and all local standards and codes applicable in the location of installation.

Engine generator sets that are stored by Owner / Buyer longer than 180 days from date of shipment are subject to special requirements. Contact MTU Onsite Energy's Service Center for instructions.

TO OBTAIN WARRANTY SERVICE

Warranty service may only be performed by MTU Onsite Energy authorized service providers. **Service provided by unauthorized persons will void this Limited Warranty. Non-MTU Onsite Energy replacement part(s) will void this Limited Warranty.** Contact your nearest MTU Onsite Energy Service Representative to obtain warranty service. For assistance in locating your nearest authorized service representative, see contact information at the bottom of this page.

THIS WARRANTY IS IN LIEU OF ALL OTHER WARRANTIES EXPRESS OR IMPLIED. NO WARRANTIES SHALL BE IMPLIED OR OTHERWISE CREATED UNDER THE UNIFORM COMMERCIAL CODE, INCLUDING BUT NOT LIMITED TO A WARRANTY OF MERCHANTABILITY OR A WARRANTY OF FITNESS FOR A PARTICULAR PURPOSE.

STANDBY LIMITED WARRANTY
Two (2) Year / 3,000 Hour Basic

MTU ONSITE ENERGY SHALL NOT BE LIABLE FOR ANY CLAIM GREATER IN AMOUNT THAN THE PURCHASE PRICE OF THE PRODUCT AT ISSUE, AND IN NO EVENT SHALL MTU ONSITE ENERGY BE LIABLE FOR ANY SPECIAL, INDIRECT, OR CONSEQUENTIAL DAMAGES. STATE LAWS REGARDING THE RIGHTS OF CONSUMERS MAY VARY FROM STATE TO STATE.

1. The following items are not considered nor will they be covered under this Limited Warranty. If there are questions as to coverage under this Limited Warranty, it is advisable to contact the factory in advance of filing a claim.
   a. Battery or batteries of any type or kind. The battery manufacturer's warranty, if any, is the only warranty that applies to batteries. Any warranty claim should be handled with the manufacturer according to its policies.
   b. Adjustments to fuel systems or governor system at time of start-up or any time after. A warranty claim for such adjustments is acceptable only when a defective part has been replaced, returned to the factory, and approved as defective.
   c. Normal maintenance costs, including but not limited to adjustments, loose and/or leaking fittings or clamps, and tune-ups performed during start-up or anytime thereafter.
   d. Due to shipping, manufacturer is not responsible for loose connections. All connections must be checked at time of start-up.
   e. Non-MTU Onsite Energy replacement part(s) will void this Limited Warranty.
   f. Products that are modified in any form without the written consent of MTU Onsite Energy will void this Limited Warranty.
   g. Shipping damage of any type.
   h. Any installation errors or damage of the equipment when shipped as ordered.
   i. Any overtime travel or labor to make repairs under warranty.
   j. Any special access fees required to gain access to MTU Onsite Energy equipment, including but not limited to any training or safety policy requirements to gain access.
   k. Additional costs associated with inaccessible installations, including but not limited to removal and reinstallation of the generator set.
   l. Rental equipment used during warranty work including but not limited to generators, rigging equipment such as a crane or boom truck, load banks, and special test equipment above factory requirements.
   m. Excess mileage charges. Any authorized service provider may perform warranty service anywhere, but will only be paid for mileage expenses from the nearest service center and limited to 400 miles / 644 Kilometers round-trip.
   n. Any equipment not factory approved and engineered for use on MTU Onsite Energy products. This includes but is not limited to aftermarket items such as special fuel systems, enclosures, exhaust systems, or switch gear that had been sought out and quoted by a third party to be included in billing of the MTU Onsite Energy equipment.
   o. Misuse or abuse during installation and thereafter.
   p. Normal wear and tear, maintenance, and consumable items that are not required as part of a warranty repair. Consumable items include but are not limited to belts, hoses, coolant, oil, filters, and fuses.
   q. Acts of nature or acts of God such as lightning, wind, flood, tornado, hurricane, or earthquake.
   r. Any damage due to situations beyond the control of the manufacturing of the product or workmanship of the product.
   s. Installation or operation outside the guidelines as stated in the Installation Guide and Owner's Manual.
   t. Diesel engine "Wet Stacking" due to lightly loaded diesel engines.
   u. Misapplication of the equipment such as usage outside the original design parameters as stated on the nameplate of the equipment.

v. Travel expense on portable equipment.
w. Trailer lights, wiring, and brakes.
x. More than one trip to the job site because a service vehicle was not stocked with normal service parts.
y. Lodging expense of person(s) performing service, unless approved in advance by factory.
z. Engine fluids.
aa. Units purchased at the standby power rating that are being used in a prime power application.
ab. Any repair labor time that is determined to be excessive, e.g., two or more people performing a one-person job.
ac. Any expenses associated with investigating performance complaints in which no defect is found.
ad. Any associated costs for replacing components that are found not to be defective.
ae. Any adjustments covered in the start-up and inspection forms that are to be completed during start-up.

2. The accessories that are limited to one (1) year parts and labor from date of shipment include but are not limited to:
   a. Cords, receptacles, and cord reels
   b. Gas flex pipes
   c. Housing lights, space heaters, and associated equipment

© MTU Onsite Energy. Subject to alteration due to technological advances.

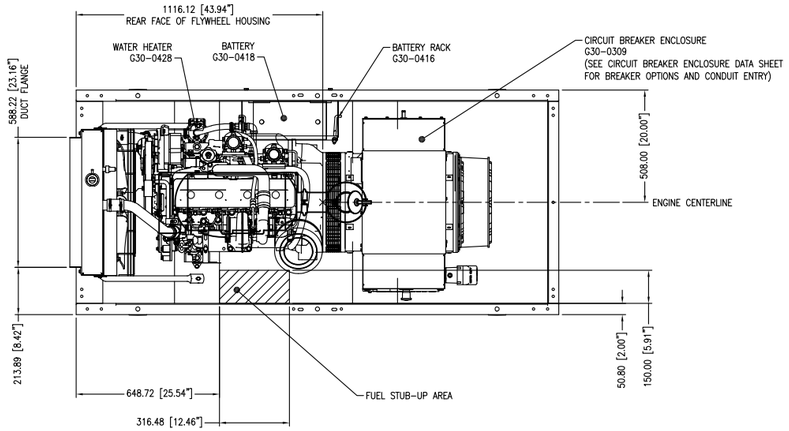

TOP VIEW

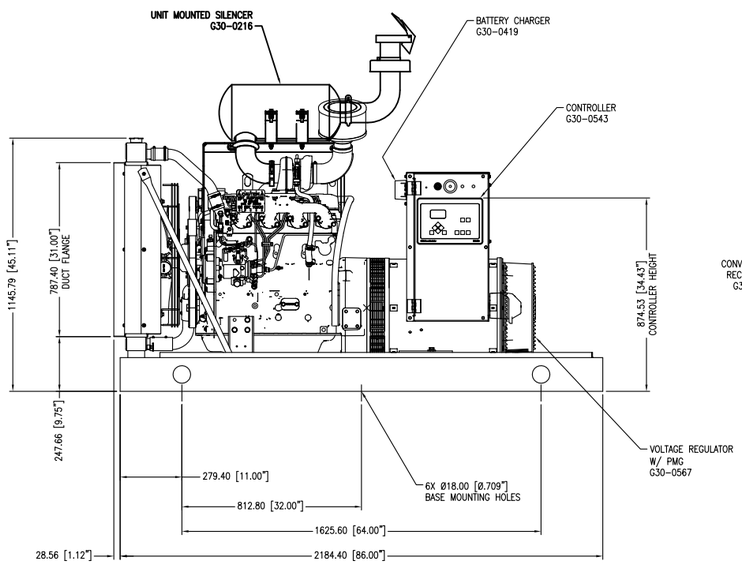

LEFT VIEW

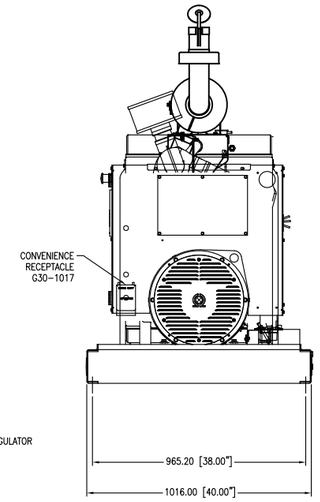

REAR VIEW

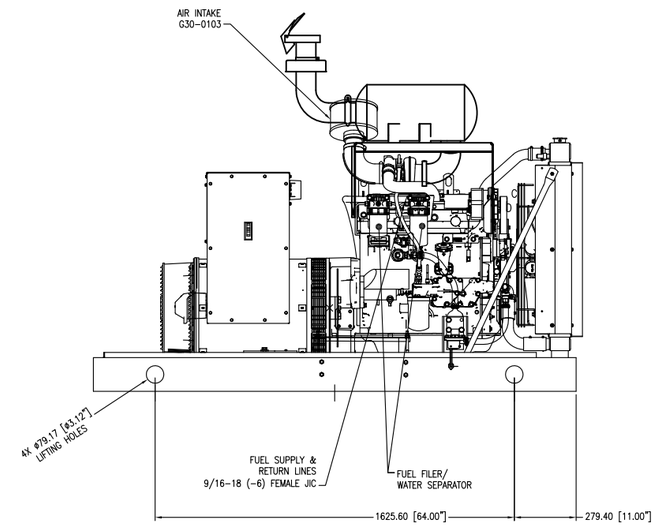

RIGHT VIEW

REVISION	DATE	DESCRIPTION

THIS DRAWING IS PROPERTY OF MTU ONSITE ENERGY CORPORATION AND CANNOT BE USED EXCEPT IN CONNECTION WITH MTU ONSITE ENERGY CORPORATION POWER GENERATION PROJECTS. ANY THIRD PARTY MODIFICATION MAY VOID THIS DRAWING. MTU ONSITE ENERGY CORPORATION RESERVES ALL RIGHTS OF THIS DRAWING.

APPLICABLE MODELS:

MTU 4R0113 DS44
MTU 4R0113 DS40
MTU 4R0113 DS55
MTU 4R0113 DS50

THIRD ANGLE PROJECTION

DRAWN TO SCALE
DIMENSIONS: MM [INCH]

DATE CREATED: 2015-09-25

DIMENSIONAL LAYOUT

DESCRIPTION: 40-50 kW Genset, Housed Base

ENGINE: John Deere, JD4045TF

WEIGHT (MIN-MAX): 997-1291 KG 2198-2845 LB

DRAWING NUMBER: XZG3000100099

SHEET: 1 of 2

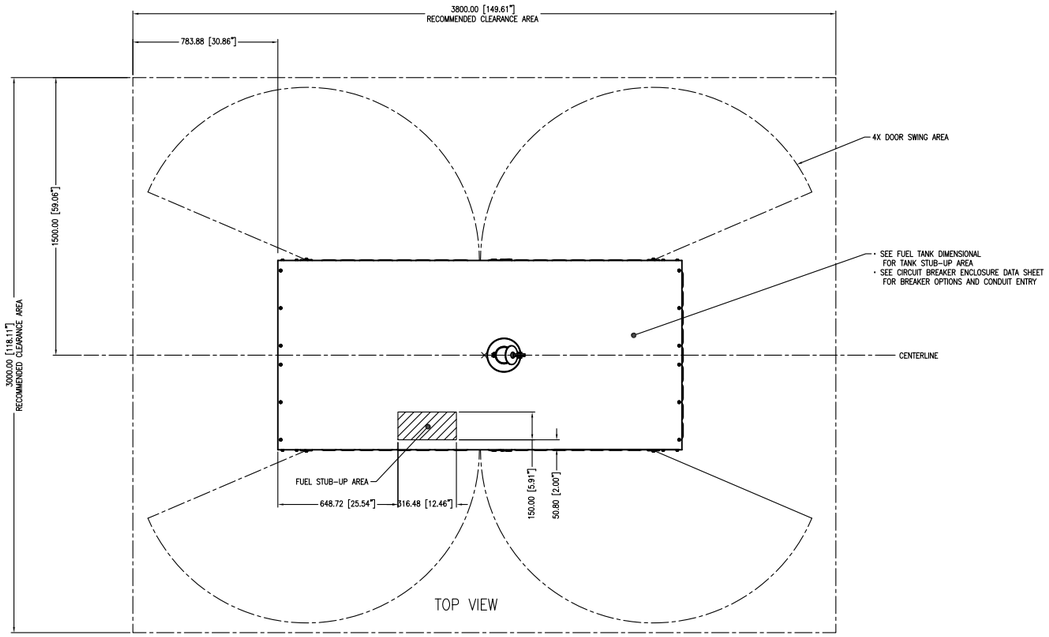

DRAWING OPTIONS 40-50 kW JD4045TF		
Group	Drawing Code	Description
Housing Options, Exterior	G30-0805	Level 2 Housing
	G30-0806	Level 3 Housing w/ Exhaust Scoop
	G30-0807	Air Exhaust Gravity Louver
	G30-0810	Level 1 Housing
Housing Options, Interior	G30-0904	Air Intake Motorized Louver
	G30-0905	Interior Housing Light
	G30-0906	Heater

Reference the Drawing Options table and within the Layer Properties and turn on/off the Drawing Codes that may or may not apply to your configuration.

Note: Some options may not be referenced. Only options which visibly change the drawing are selectable.

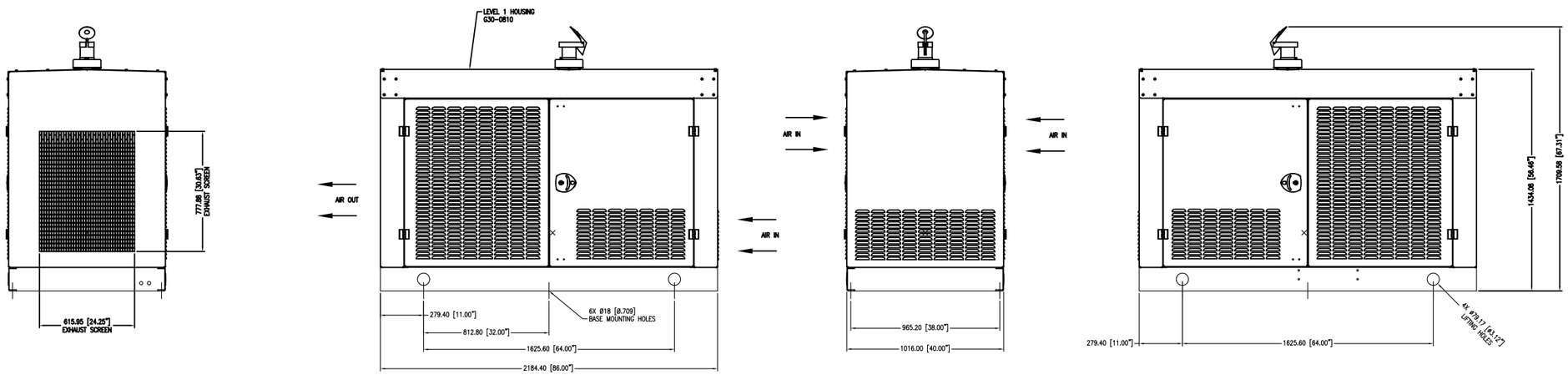

FRONT VIEW

LEFT VIEW

REAR VIEW

RIGHT VIEW

REVISION	DATE	DESCRIPTION

THIS DRAWING IS PROPERTY OF MTU ONSITE ENERGY CORPORATION AND CANNOT BE USED EXCEPT IN CONNECTION WITH MTU ONSITE ENERGY CORPORATION POWER GENERATION PROJECTS. ANY THIRD PARTY MODIFICATION MAY VOID THIS DRAWING. MTU ONSITE ENERGY CORPORATION RESERVES ALL RIGHTS OF THIS DRAWING.

APPLICABLE MODELS:

MTU 4R0113 DS44
MTU 4R0113 DS40
MTU 4R0113 DS55
MTU 4R0113 DS50

THIRD ANGLE PROJECTION

DRAWN TO SCALE
DIMENSIONS: MM [INCH]

DATE CREATED: 2015-09-28

DIMENSIONAL LAYOUT

DESCRIPTION: 40-50 kW Genset, Housing

ENGINE: John Deere, JD4045TF

WEIGHT (MIN-MAX): 70-406 KG 154-895 LB

DRAWING NUMBER: XZG3000100101

SHEET: 1 of 1

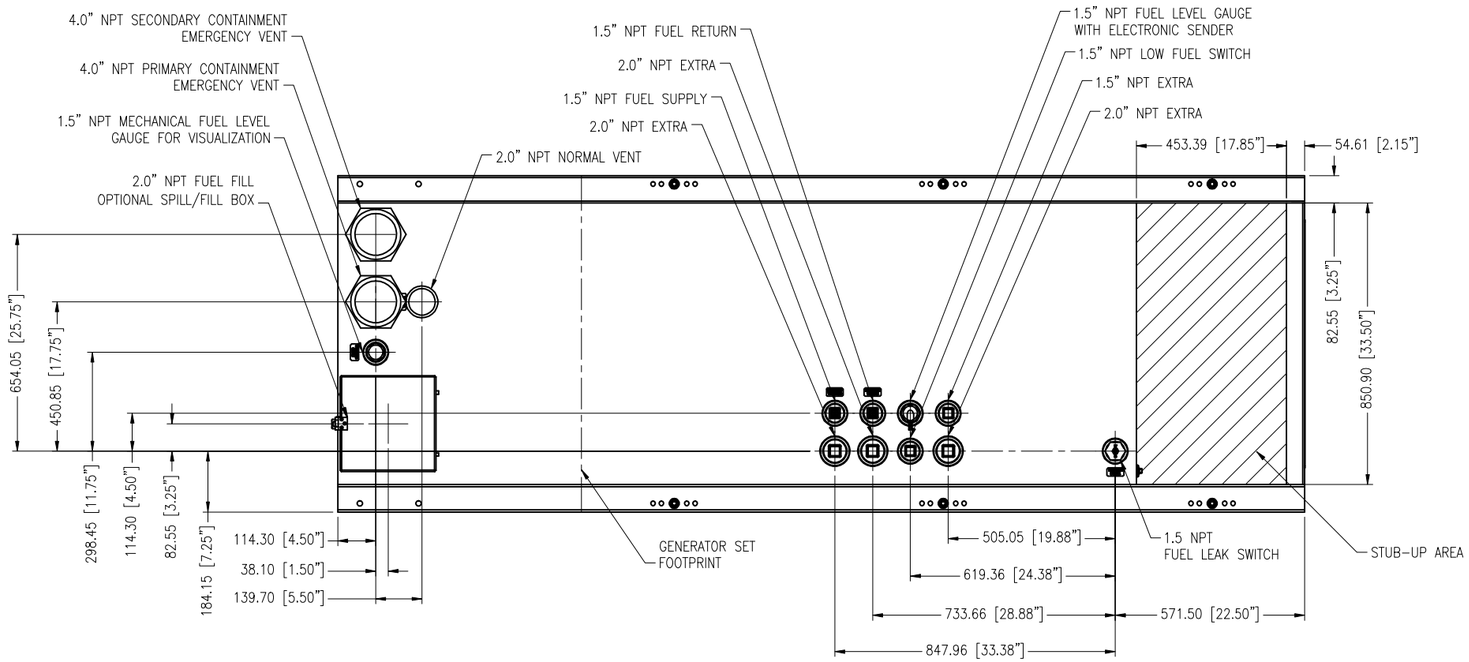

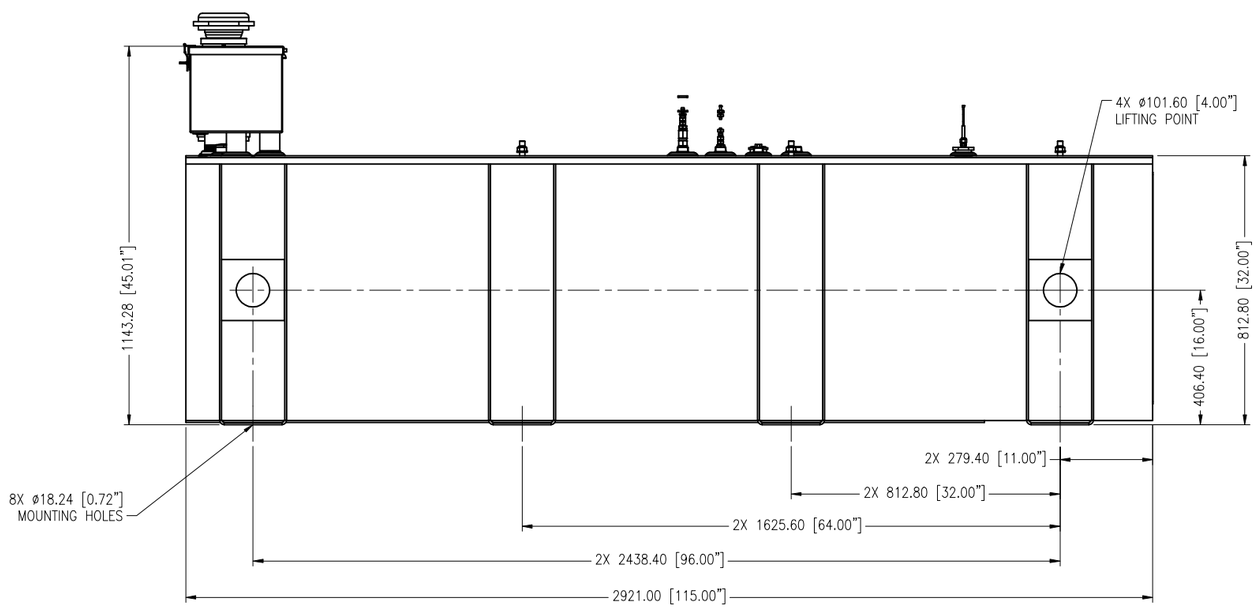

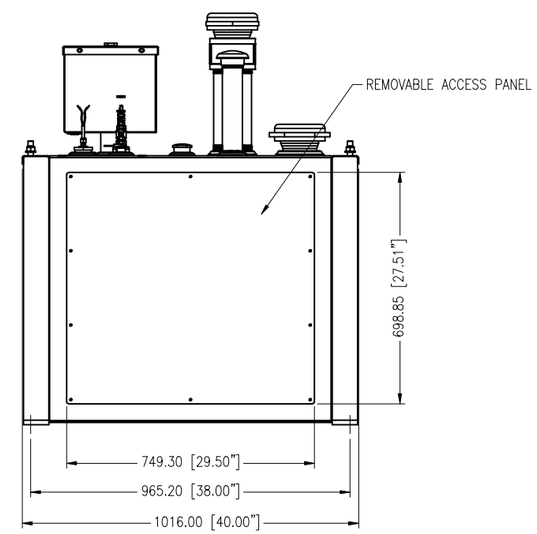

REVISION	DATE	DESCRIPTION

THIS DRAWING IS PROPERTY OF MTU ONSITE ENERGY CORPORATION AND CANNOT BE USED EXCEPT IN CONNECTION WITH MTU ONSITE ENERGY CORPORATION POWER GENERATION PROJECTS. ANY THIRD PARTY MODIFICATION MAY VOID THIS DRAWING. MTU ONSITE ENERGY CORPORATION RESERVES ALL RIGHTS OF THIS DRAWING.

APPLICABLE MODELS:
MTU 4R0113 DS40
MTU 4R0113 DS44
MTU 4R0113 DS50
MTU 4R0113 DS55
MTU 4R0113 DS60

THIRD ANGLE PROJECTION

DRAWN TO SCALE
DIMENSIONS: MM [INCH]

DATE CREATED: 2015-10-02

DIMENSIONAL LAYOUT

DESCRIPTION: 40-60 kW 72 Hr 370 Gal Extended Tank

ENGINE: JD4045TF/HF

WEIGHT: 540 KG 1188 LB

DRAWING NUMBER: XZG3000100102

SHEET: 7 of 10

GENERATOR OUTLET BOX

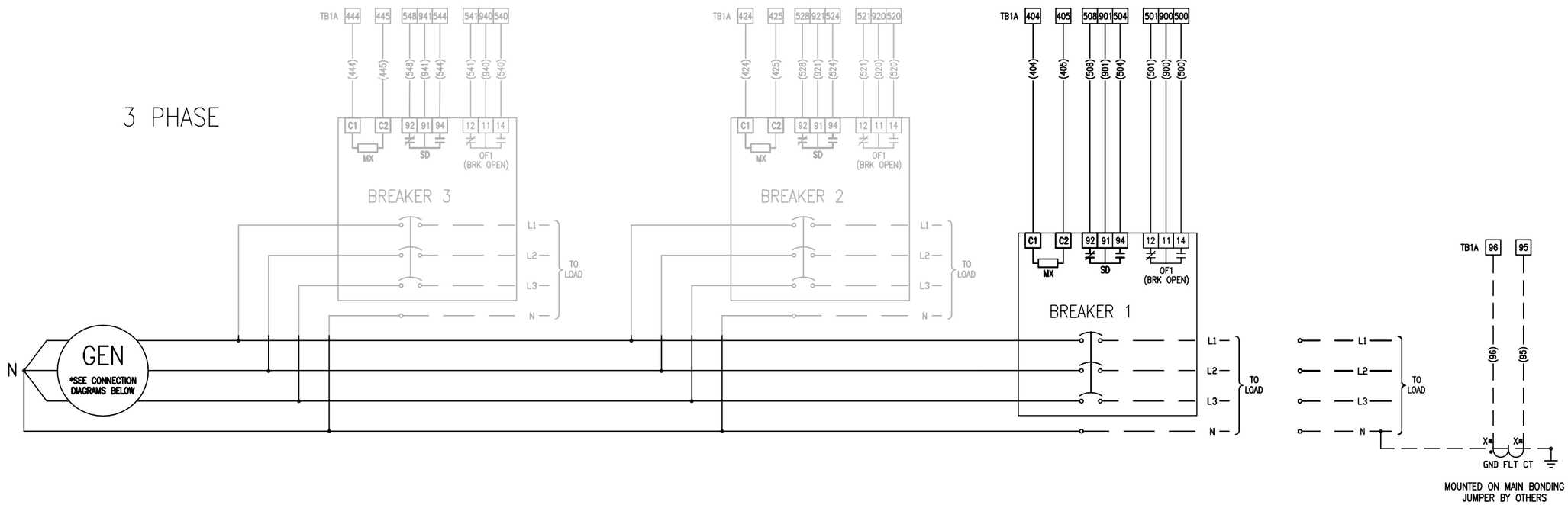

NOTE:

1. WIRE NUMBERS ARE IN PARENTHESIS
2. SHORT DASHED LINES (------) INDICATE CUSTOMER CONNECTION
3. BREAKER ACCESSORIES ARE SHOWN IN THE TRIPPED OR OPEN POSITION

LEGEND

A	AMMETER
AEM	ANALOG EXPANSION MODULE
CP	CONTROL PANEL
MGC	MTU GENERATOR CONTROLLER
DVR	DIGITAL VOLTAGE REGULATOR
F1-3	KTK-10 OR JX-10 10A
GFM	GROUND FAULT MONITOR
GGS	GENERATOR GROUND STUD
Hz	FREQUENCY METER
K6	LOUVER MOTOR RELAY
M	LOUVER MOTOR
MN	UNDERVOLTAGE TRIP
MX	SHUNT TRIP
OF1	AUXILIARY SWITCH 1
SD	ALARM SWITCH
TB1	TERMINAL BLOCK 1 (PANEL BACK)
TB1A	TERMINAL BLOCK 1A (PANEL BACK)
TB3	TERMINAL BLOCK 3 (GEN OUTLET BOX)
TB4	TERMINAL BLOCK 4 (HANDY BOX)
V	VOLTMETER

GROUND FAULT CT WIRING CONNECTIONS

CB RATING	CT RATIO	*CT CONNECTIONS
30-230A	50:5	X2-X3
250-450A	100:5	X1-X2
500-700A	150:5	X1-X3
750-900A	200:5	X4-X5

REV	REVISION DESCRIPTION	DATE	BY

THIS DRAWING IS PROPERTY OF MTU ONSITE CORPORATE AND CANNOT BE USED EXCEPT IN CONNECTION WITH MTU ONSITE ENERGY CORPORATE POWER GENERATION PROJECTS. ANY THIRD PARTY MODIFICATION MAY VOID THIS DRAWING. MTU ONSITE ENERGY CORPORATE RESERVES ALL RIGHTS OF THIS DRAWING.

SPECIAL NOTE

TO MINIMIZE ANY ELECTRICAL NOISE BEING INTRODUCED INTO THE ENGINE CONTROLLER, CONTROL WIRING AND AC POWER LINES NEED TO BE RUN IN SEPARATE CONDUITS.

ENGINE: JOHN DEERE 4045/3029
GENERATOR: 3ø & 1ø
REGULATOR: NA
CONTROL PANEL: NA
VOLTAGE: NA
GOVERNOR: NA

BREAKER DIAGRAM

DATE: 12-22-15
DRAWING SIZE: B-SIZE
DRAWN BY:
SHEET: 1 OF 1

XZG3000100110

PM300

480V & LESS

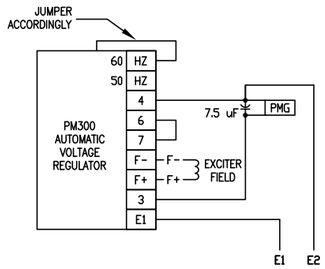

ON 480V & 380V UNITS WIRE PM300 TO INNER TAPS E1 & E2.
FOR ALL OF THE OTHER VOLTAGE UNITS WIRE THE PM300
DIRECTLY TO THE LINES.

CONTROLLER VOLTAGE & CURRENT SENSING CONNECTIONS

		MGC & PIN #		
		1500	2000	3000
WIRE #	G7	45	41	86
	G8	43	39	88
	G9	41	37	90
	N	40	35	91
	34	38	69	1
	35	36	72	3
	36	34	75	5

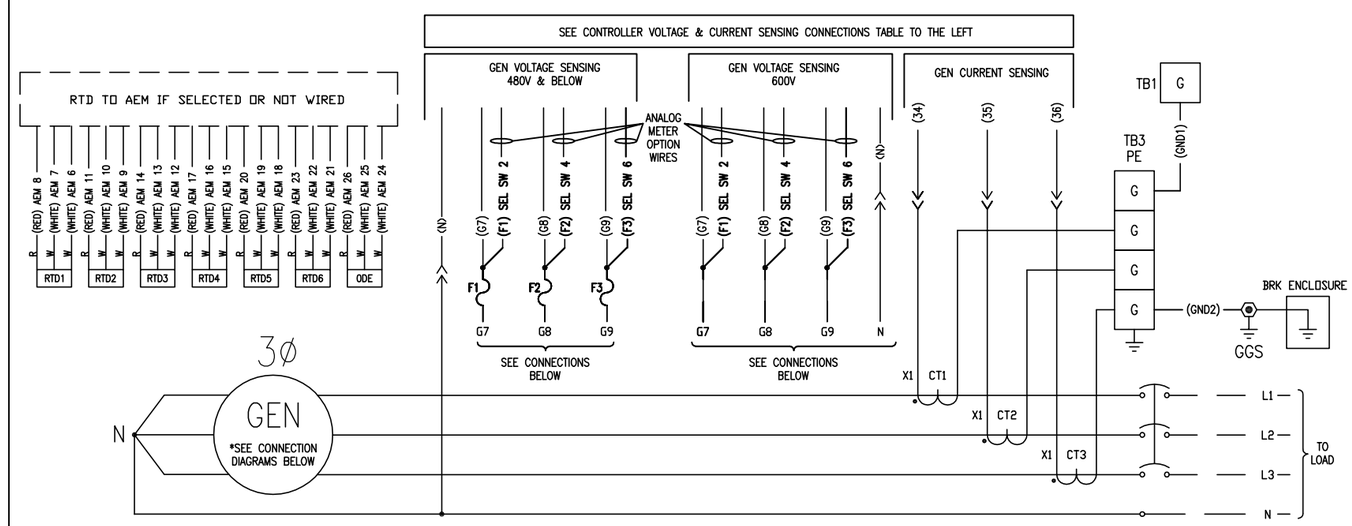

HIGH WYE 3Ø

HZ	L-L	L-LO
60	380	219
	416	240
	440	254
	460	266
	480	277
50	380	219
	400	231
	415	240
	440	254

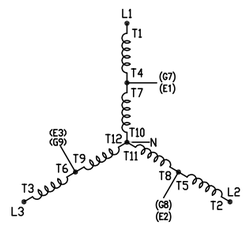

REV	REVISION DESCRIPTION	DATE	BY

THIS DRAWING IS PROPERTY OF MTU ONSITE CORPORATE AND CANNOT BE USED EXCEPT IN CONNECTION WITH MTU ONSITE ENERGY CORPORATE POWER GENERATION PROJECTS. ANY THIRD PARTY MODIFICATION MAY VOID THIS DRAWING. MTU ONSITE ENERGY CORPORATE RESERVES ALL RIGHTS OF THIS DRAWING.

****SPECIAL NOTE****

TO MINIMIZE ANY ELECTRICAL NOISE BEING INTRODUCED INTO THE ENGINE CONTROLLER, CONTROL WIRING AND AC POWER LINES NEED TO BE RUN IN SEPARATE CONDUITS.

ENGINE: JD 4045 or 3029
GENERATOR: ALL
REGULATOR: SE350/DVR2000E+/PM30
CONTROL PANEL: NA
VOLTAGE: ALL
GOVERNOR: NA

GENERATOR DIAGRAM

DATE: 12-22-15
DRAWING SIZE: B-SIZE
DRAWN BY:
SHEET: 1 OF 1

XZG3000100110

4 RELAY OPTION

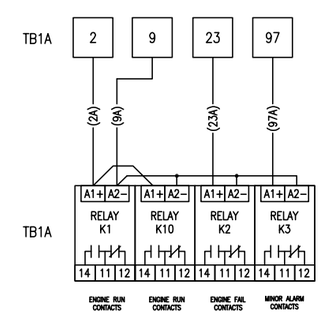

REMOTE E-STOP OPTION

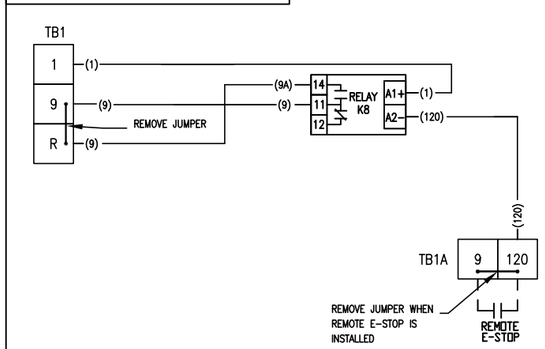

REV	REVISION DESCRIPTION	DATE	BY

THIS DRAWING IS PROPERTY OF MTU ONSITE CORPORATE AND CANNOT BE USED EXCEPT IN CONNECTION WITH MTU ONSITE ENERGY CORPORATE POWER GENERATION PROJECTS. ANY THIRD PARTY MODIFICATION MAY VOID THIS DRAWING. MTU ONSITE ENERGY CORPORATE RESERVES ALL RIGHTS OF THIS DRAWING.

****SPECIAL NOTE****

TO MINIMIZE ANY ELECTRICAL NOISE BEING INTRODUCED INTO THE ENGINE CONTROLLER, CONTROL WIRING AND AC POWER LINES NEED TO BE RUN IN SEPARATE CONDUITS.

ENGINE: JOHN DEERE 4045/3029	
GENERATOR: NA	
REGULATOR: NA	
CONTROL PANEL: NA	
VOLTAGE: NA	
GOVERNOR: NA	

OPTION PAGE ALL

DATE: 12-22-15	DRAWING SIZE: B-SIZE
DRAWN BY:	SHEET: 1 OF 2

XZG3000100110

MGC 2000

PANEL SIDE PLUG		ENGINE SIDE PLUG	
*C (48) TB1 48	1	1	(48) ALTERNATOR
*C (9D) TB1 9	2	2	(9) SPLICE
*C (9E) TB1 9	3	3	(9A) SPLICE
*C (9G) TB1 9	4	4	(9M) SPLICE
*A (40) MGC 8	5	5	(40) OPGS
*A (41) MGC 10	6	6	(41) WTGS
*A (98) MGC 9	7	7	(98) FLGS
*A (21) MGC 29	8	8	(21) LWL
*A (57) MGC 28	9	9	(57) FLS
*C (2A) TB1 2	10	10	(2) ALTERNATOR
*A (3) MGC RELAY	11	11	(3) PILOT RELAY
*C (103) TB1 FUSE	12	12	(103) BATT +
	13	13	(104) BATT –
*C (1C) TB1 1	14	14	(1) LWL
*A (59) TB1 59	15	15	(59) SLS
	16	16	
*A (32) MGC PRE-START RELAY	17	17	(32) FUEL PUMP A
	18	18	
*C (80) TB1 80	19	19	(80) FUEL LEVEL GAUGE
	20	20	
*C (62A) TB1 62	21	21	(62) MPU
*C (63A) TB1 63	22	22	(63) MPU
*C (S) TB1 S	23	23	(S) MPU
	24	24	
*C (60) TB1 60	25	25	(60) GOV ACTUATOR
*C (61) TB1 61	26	26	(61) GOV ACTUATOR
*C (S) TB1 S	27	27	(S) GOV ACTUATOR
	28	28	
	29	29	

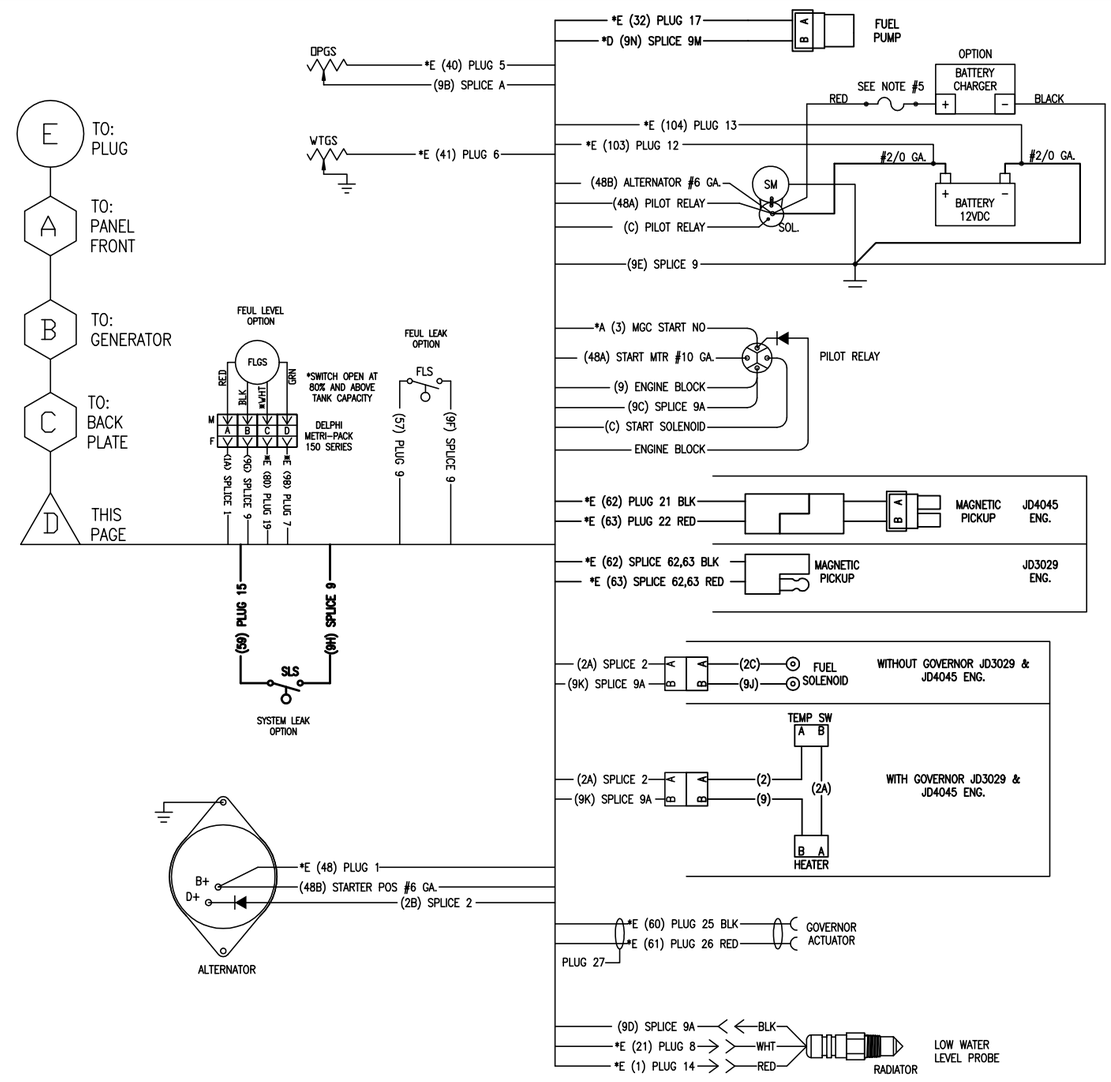

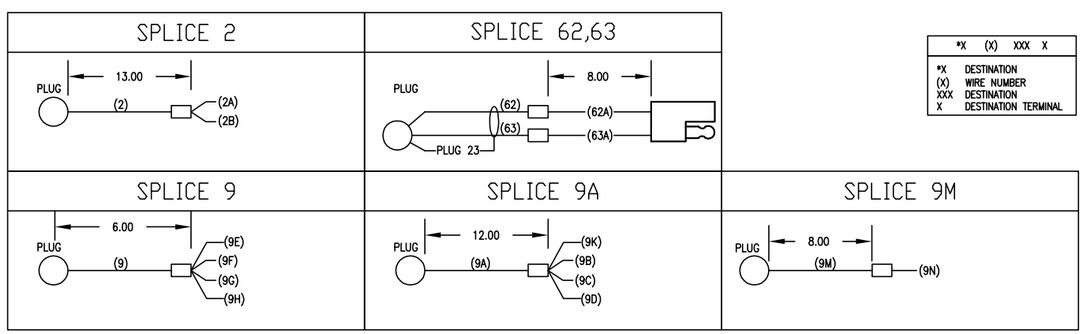

*X	(X)	XXX	X
*X	DESTINATION		
(X)	WIRE NUMBER		
XXX	DESTINATION		
X	DESTINATION TERMINAL		

LEGEND

BC	BATTERY CHARGER
BPS	BACK PLATE STUD
MGC	MTU GENERATOR CONTROLLER
DGS	DOOR GROUND STUD
FLGS	FUEL LEVEL GAUGE SENDER
FLS	FUEL LEAK SWITCH
GGS	GENERATOR GROUND STUD
LWL	LOW WATER LEVEL PROBE
TB1	TERMINAL BLOCK 1 (PANEL BACK)
TB1A	TERMINAL BLOCK 1A (PANEL BACK)
TB3	TERMINAL BLOCK 3 (GEN OUTLET BOX)
TB6	DC LIGHT HANDY BOX
SM	STARTER MOTOR
SMS	START MOTOR SOLENOID

NOTES:
1. WIRE NUMBERS ARE IN PARENTHESIS.
2. SHORT DASHED LINES (-------) INDICATE CUSTOMER CONNECTION OR OPTIONAL EQUIPMENT.
3. BATTERY CHARGER FUSE ONLY WHEN REQUIRED OR SUPPLIED BY CHARGER MANUFACTURER.
4. FUEL LEVEL GUAGE SENDER REQUIREMENTS
   33 OHMS = FULL
   240 OHMS = EMPTY
5. BATTERY CHARGER FUSE ONLY WHEN SUPPLIED OR REQUIRED BY CHARGER MANUFACTURER.

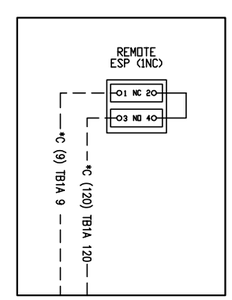

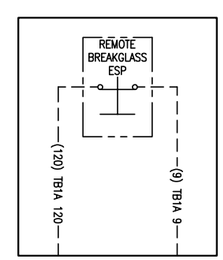

REV	REVISION DESCRIPTION	DATE	BY

THIS DRAWING IS PROPERTY OF MTU ONSITE CORPORATE AND CANNOT BE USED EXCEPT IN CONNECTION WITH MTU ONSITE ENERGY CORPORATE POWER GENERATION PROJECTS. ANY THIRD PARTY MODIFICATION MAY VOID THIS DRAWING. MTU ONSITE ENERGY CORPORATE RESERVES ALL RIGHTS OF THIS DRAWING.

SPECIAL NOTE

TO MINIMIZE ANY ELECTRICAL NOISE BEING INTRODUCED INTO THE ENGINE CONTROLLER, CONTROL WIRING AND AC POWER LINES NEED TO BE RUN IN SEPARATE CONDUITS.

ENGINE: JOHN DEERE 4045/3029
GENERATOR: NA
REGULATOR: NA
CONTROL PANEL: NA
VOLTAGE: NA
GOVERNOR: NA

ENGINE DIAGRAM

DATE: 12-22-15
DRAWING SIZE: B-SIZE
DRAWN BY:
SHEET: 1 OF 1

XZG3000100110

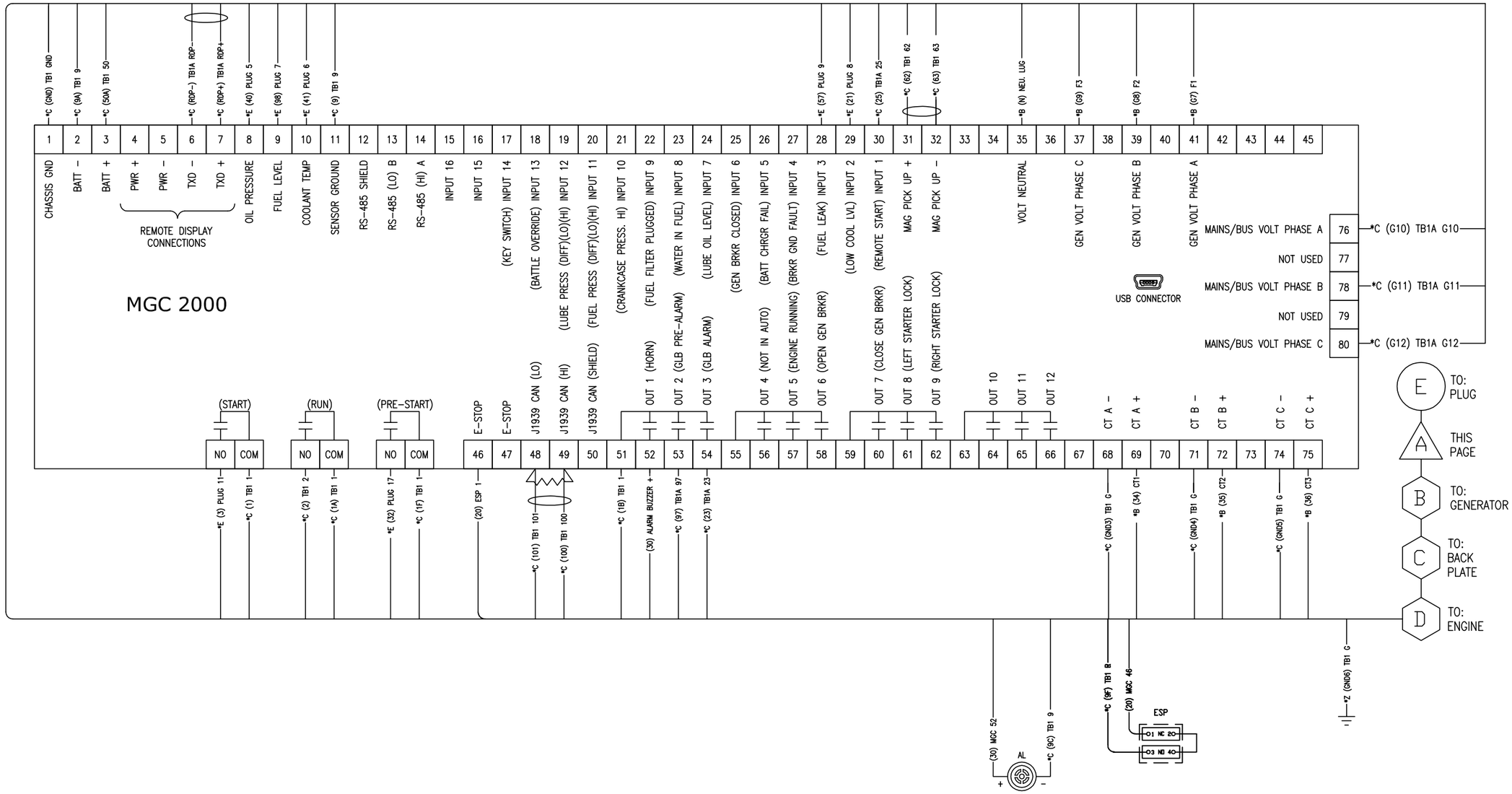

NOTES:

1. WIRE NUMBERS ARE IN PARENTHESIS.
2. SHORT DASHED LINES (------) INDICATE CUSTOMER CONNECTION OR OPTIONAL EQUIPMENT.

LEGEND

AL	ALARM BUZZER
AEM	ANALOG EXPANSION MODULE
BOS	BATTLE OVERRIDE SW
BPS	BACK PLATE STUD
CEM	CONTACT EXPANSION MODULE
DGS	DOOR GROUND STUD
ESP	EMERGENCY STOP BUTTON
FLGS	FUEL LEVEL GAUGE SENDER
FLS	FUEL LEAK SWITCH
GGS	GENERATOR GROUND STUD
GSA	GOVERNOR SPEED ADJUST
K1	ENGINE RUN RELAY
K10	ENGINE RUN RELAY
K2	ENGINE FAIL RELAY
K3	MINOR ALARM RELAY
K6	LOUVER MOTOR RELAY
K8	REMOTE EMERGENCY STOP RELAY
LWL	LOW WATER LEVEL PROBE
MGC	MTU GENERATOR CONTROLLER
MEC	MODBUS/ETHERNET CONVERTER
R1	120 OHM ½ 1% RESISTOR
TB1	TERMINAL BLOCK 1 (PANEL BACK)
TB1A	TERMINAL BLOCK (PANEL BACK)
VAR	VOLTAGE ADJUST RHEOSTAT
VAT	VOLTAGE ADJUST TOGGLE

*X	(X)	XXX	X
*X	DESTINATION		
(X)	WIRE NUMBER		
XXX	DESTINATION		
X	DESTINATION TERMINAL		

REV	REVISION DESCRIPTION	DATE	BY

THIS DRAWING IS PROPERTY OF MTU ONSITE CORPORATE AND CANNOT BE USED EXCEPT IN CONNECTION WITH MTU ONSITE ENERGY CORPORATE POWER GENERATION PROJECTS. ANY THIRD PARTY MODIFICATION MAY VOID THIS DRAWING. MTU ONSITE ENERGY CORPORATE RESERVES ALL RIGHTS OF THIS DRAWING.

SPECIAL NOTE

TO MINIMIZE ANY ELECTRICAL NOISE BEING INTRODUCED INTO THE ENGINE CONTROLLER, CONTROL WIRING AND AC POWER LINES NEED TO BE RUN IN SEPARATE CONDUITS.

ENGINE: JOHN DEERE 4045/ 3029
GENERATOR: NA
REGULATOR: NA
CONTROL PANEL: MGC 2000
VOLTAGE: NA
GOVERNOR: NA

MGC 2000 FACE PANEL

DATE: 12-22-15
DRAWING SIZE: B-SIZE
DRAWN BY:
SHEET: 1 OF 1

XZG3000100110

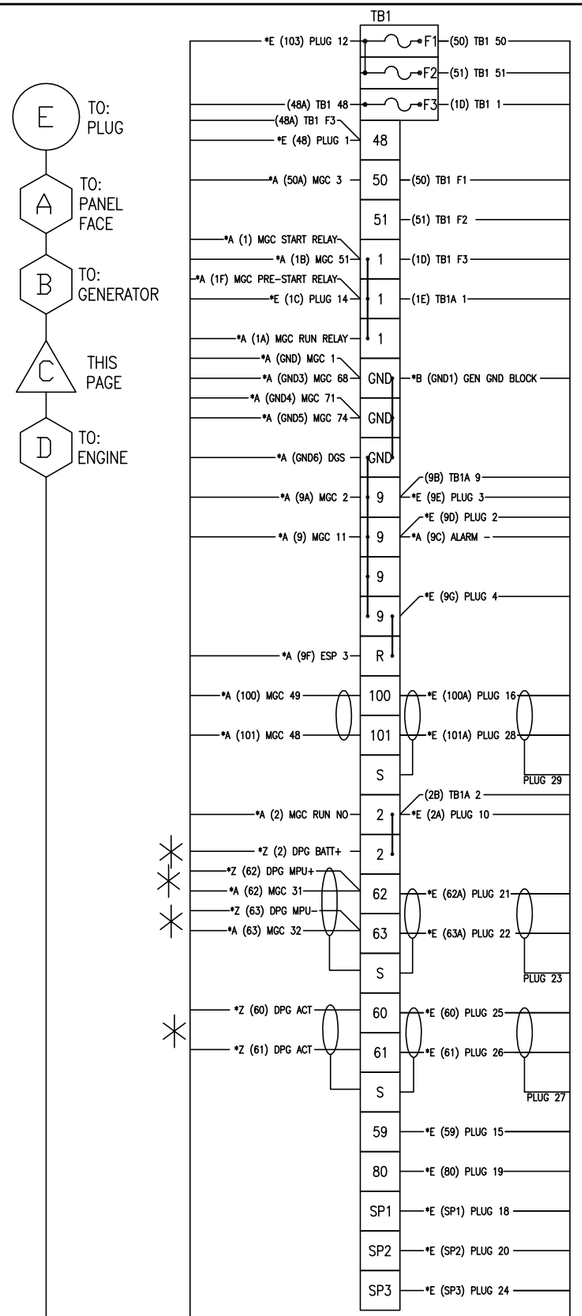

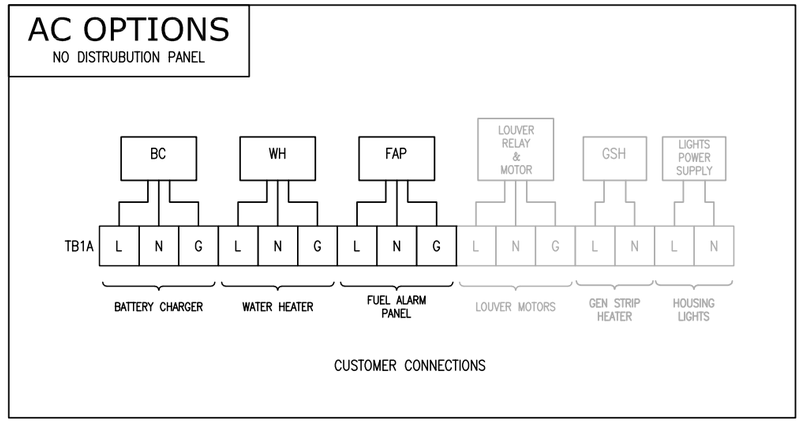

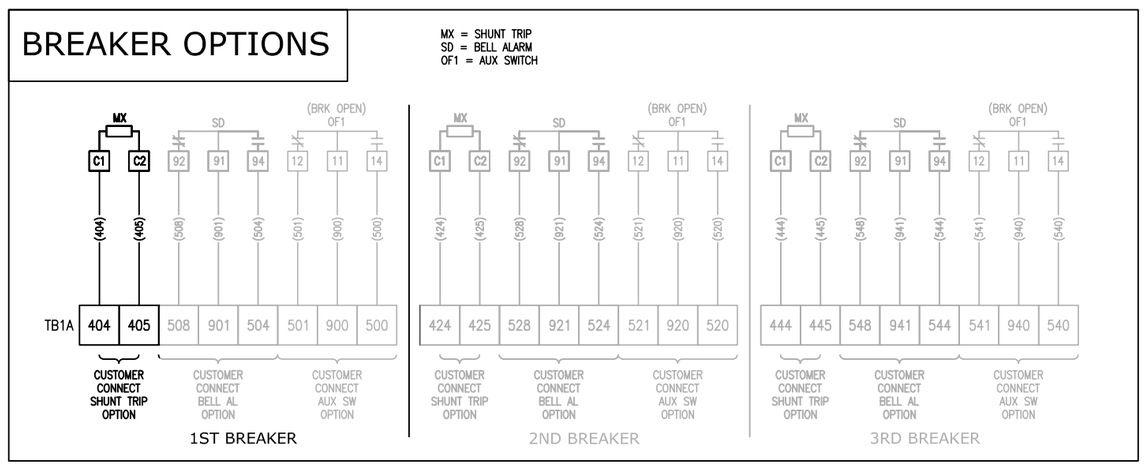

NOTES:

1. WIRE NUMBERS ARE IN PARENTHESIS.
2. SHORT DASHED LINES (------) INDICATE CUSTOMER CONNECTION OR OPTIONAL EQUIPMENT.

LEGEND:

AEM	ANALOG EXPANSION MODULE
BOS	BATTLE OVERRIDE SW
BPS	BACK PLATE STUD
CEM	CONTACT EXPANSION MODULE
MGC	MTU GENERATOR CONTROLLER
DGS	DOOR GROUND STUD
F1	PANEL FUSE ATO 5A
F2	PANEL FUSE ATO 10A
F3	PANEL FUSE ATO 15A
K1	ENGINE RUN RELAY
K10	SPARE RELAY
K2	ENGINE FAIL RELAY
K3	MINOR ALARM RELAY
K6	LOUVER MOTOR RELAY
MEC	MODBUS/ETHERNET CONVERTER
R1	RESISTOR 120 OHM ⅛ W
TB1	TERMINAL BLOCK 1
TB1A	TERMINAL BLOCK 1A

*X	(X)	XXX	X
*X	DESTINATION		
(X)	WIRE NUMBER		
XXX	DESTINATION		
X	DESTINATION TERMINAL		

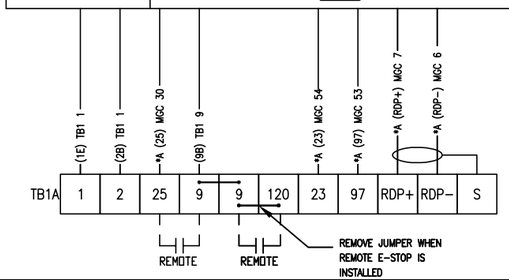

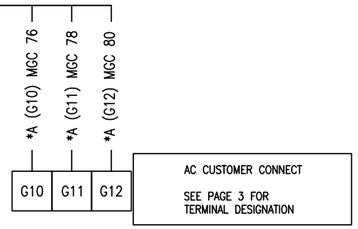

REV	REVISION DESCRIPTION	DATE	BY

mtu onsite energy

THIS DRAWING IS PROPERTY OF MTU ONSITE CORPORATE AND CANNOT BE USED EXCEPT IN CONNECTION WITH MTU ONSITE ENERGY CORPORATE POWER GENERATION PROJECTS. ANY THIRD PARTY MODIFICATION MAY VOID THIS DRAWING. MTU ONSITE ENERGY CORPORATE RESERVES ALL RIGHTS OF THIS DRAWING.

SPECIAL NOTE

TO MINIMIZE ANY ELECTRICAL NOISE BEING INTRODUCED INTO THE ENGINE CONTROLLER, CONTROL WIRING AND AC POWER LINES NEED TO BE RUN IN SEPARATE CONDUITS.

ENGINE: JOHN DEERE 4045/3029	
GENERATOR: NA	
REGULATOR: NA	
CONTROL PANEL: MGC 2000	
VOLTAGE: NA	
GOVERNOR: NA	

MGC 2000 BACK PLATE

DATE: 12-22-15	DRAWING SIZE: B-SIZE
DRAWN BY:	SHEET: 1 OF 1

XZG3000100110

Meramec Caverns
ATS Detailed Information

#1	ATS	AMPS: 0200	Qty: 1

Bulletin Number	:	Series 3ATS Transfer Switches	Catalog Number	:	D03ATSA30200NGXF,11BE,18RX,44G
Service Voltage / Hz	:	480V/60Hz	Optional Accessories	:	11BE,18RX,44G
By-pass Isolation	:	Not Applicable	Product Description	:	Open Transition Series 3ATS
No. of Switched Poles	:	3	Neutral Configuration	:	Solid [A]
Withstand Rating: Frame = D, Switch Rating = 0200, Series = 300	:	See WCR table below	No. of Cables & Lug Size	:	1, #14 to 4/0 AWG
Enclosure	:	3R(F)-UL Type 3R Enclosure	Service	:	Three Phase, 4-wire

ACCESSORY DESCRIPTION

#	Accessory Code	Description
1	11BE	Feature Bundle Includes Engine Exerciser/Event Log/RS 485 Enabled/Common Alarm Output Contact
2	18RX	REX (Relay Expansion Module) with Normal and Emergency available output contacts (18B & 18G)
3	44G	Strip heater w/ thermostat, wired to load terminals: 208-600 volts

DRAWINGS FOR APPROVAL

Drawing Number	Description
978723-002	Composite Enclosure Outline and Mounting Diagram
978741	Three Phase Wiring Diagram

ASCO UL1008 Withstand and Closing Ratings [1,2,7]
(RMS Symmetrical Amps)

Frame	Switch Rating (Amps)		300, 4000 & 7000 Series							4000 & 7000 Series				7000 Series							
			Current Limiting Fuses				Specific Breaker			Time Based				Short Time Ratings[3] (sec)							
														480V Max.				600V Max.			
	Transfer Switches	Bypass Switches	480V Max.	600V Max.	Max Size, A	Class	240V Max.	480V Max.	600V Max.	Time (sec)	240V Max.	480V Max.	600V Max.	.1	.13	.3	.5	.1	.13	.3	.5
D	200	-	200kA	-	200	J	65kA	25kA	-	0.025	10kA	10kA	-	-				-			

Notes:
1) All WCR values indicated are tested in accordance with the requirements of UL 1008, 7th Edition. See ASCO Pub. 1128 for more WCR information
2) Application requirements may permit higher WCR for certain switch sizes.
3) Short Time ratings are provided for applications involving circuit breakers that utilize trip delay settings for system selective coordination
4) Optional front connected service (Accy 40MY and 40NY) limits WCR on 1600 and 2000A G Frame switches
5) Switches utilizing overlapping neutral (code "C") have 35kA, 0.050 Sec time based rating at 480V Max
6) Rating shown is for Bypass switches only, Transfer Switch rating is 100kA
7) See ASCO for Service Entrance Switch ratings
8) These frames are only available on the 7000 Series product
9) Max fuse rating is 1200A on front connected H frame switches

28-Jun-16

24-hour protection no matter when trouble strikes

ASCO Series 300 Power Transfer Switches for Power Outage Protection

Where would you be without a constant flow of electrical power? We often take for granted that power will always be around when we need it. In reality, power failures are very common. And when the power goes out, your business suffers. Power failures are unpredictable. They can occur at any time and for any number of reasons—a bolt of lightning, a power surge, a blackout, an accident or even equipment failure. They come without warning and often at the most inconvenient times.

It's for this reason that many businesses and other entities have invested in emergency power backup systems. Typically, the system consists of an engine generator and an automatic transfer switch (ATS) which transfers the load from the utility to the generator.

An ATS with built-in control logic monitors your normal power supply, senses interruptions and unacceptable abnormalities. When the utility power fails, the ATS automatically starts the engine and transfers the load after the generator has reached proper voltage and frequency. This happens in a matter of seconds after the power failure occurs. When the utility power has been restored, the ATS will automatically switch the load back, and after a time delay, it will shut down the engine. With an Automatic Transfer Switch, you are protected 24 hours a day, seven days a week.

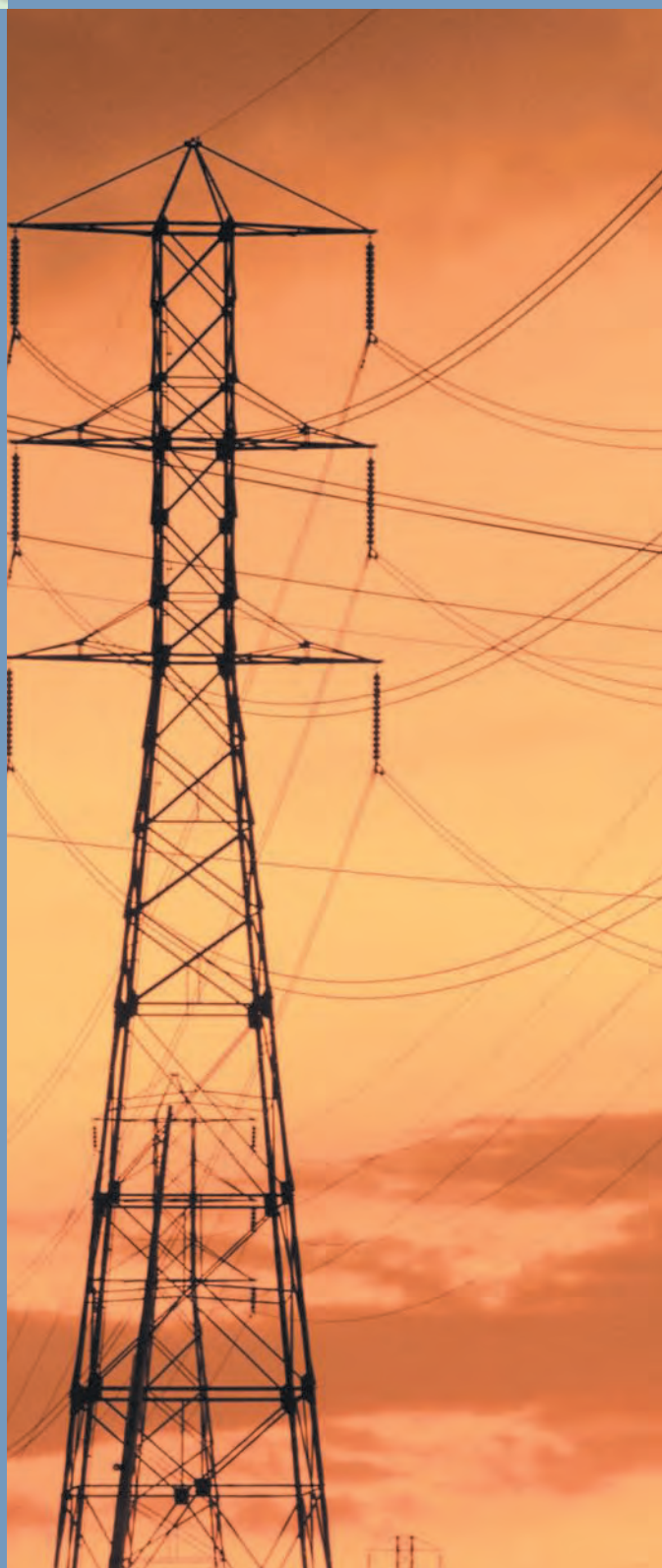

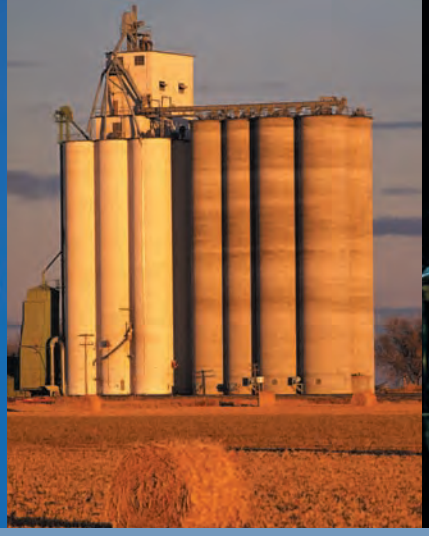

Typical Applications

Telecom

In the telecommunications industry, providing a high level of service and dependability is crucial. Lost power means an interruption in service for your customers and lost business for your company. For instance, with cell sites scattered across a wide geographical region and in many remote areas, the chances of an interruption in power are increased, making Automatic Transfer Switches a valuable resource at each location. To maintain dependable service, each cell site must be monitored 24 hours a day. This can be very difficult without some type of remote monitoring and testing capability. The Series 300 Transfer Switch, combined with ASCO's monitoring and control management system, is a cost-effective, packaged solution which can help meet both of these challenging objectives without a major investment at each cell site. With ASCO's connectivity solutions you can remotely monitor and control numerous sites from around the corner or around the world.

Agriculture

Maintaining electrical power is vital to an agriculture operation. If the flow of power is interrupted, your operation could be at risk unless the backup generator is quickly activated. A prolonged power outage can affect numerous aspects of the operation, from housing and feeding livestock to processing and producing the end product. With an ASCO Series 300 Transfer Switch, power will automatically be transferred over to your backup generator, eliminating the need to manually switch from utility to generator. When power is restored, the ASCO Series 300 Transfer Switch will, after an adjustable time delay to allow for utility stabilization, automatically switch the load back to the utility service.

Commercial / Retail, Light Industrial

The retail industry is very competitive. An electrical power failure can have a dramatic impact on a retailer's bottom line. If power is interrupted during peak shopping times, the effect could be extremely damaging to present and future business. A power interruption will not only suspend shopping, it can also create safety problems, result in lost transaction data, lost account information and damage to data collection equipment. In addition, retailers who rely on controlled climates to protect valuable inventory could suffer even greater losses, especially if the power failure occurs at a time when no one is available to rectify the situation. To avoid any of these power outage problems, simply install a backup generator with an ASCO Series 300 Transfer Switch and power outage concerns will be a thing of the past.

Municipal

The ASCO Series 300 Transfer Switch can be a critical component of a municipal government's emergency power backup system. Residents of townships, cities and counties rely on police, fire, ambulance/first aid and other critical public sector services. An interruption in power would affect the ability of emergency services to effectively respond to the needs of the community. When time is a critical factor, such as when responding to a fire alarm or an emergency call, an ASCO Series 300 Transfer Switch can be a lifesaver, switching power to the backup generator. While not all municipal services are a matter of life and death, they are always expected to be there.

ASCO® Series 300 Power Transfer Switches

Maximum Reliability & Excellent Value

With a Series 300 Transfer Switch, you get a product backed by ASCO Power Technologies, the industry leader responsible for virtually every major technological advance in the Transfer Switch industry.

The ASCO Series 300 was designed for one purpose–to automatically transfer critical loads in the event of a power outage. Each and every standard component was designed by ASCO engineers for this purpose.

The Series 300 incorporates the Group G controller with enhanced capabilities for dependable operation in any environment. A user friendly control interface with a 128x64 graphical LCD display and intuitive symbols allow for ease of operation while visual LED indicators verify transfer switch status. Operating parameters and feature settings can be adjusted without opening enclosure door.

The rugged construction and proven performance of the ASCO Series 300 assure the user of many years of complete reliability. The Series 300 is even designed to handle the extraordinary demands placed on the switch when switching stalled motors and high inrush loads.

ASCO's Series 300 modular, compact design makes it easy to install, inspect and maintain. All parts are accessible from the front so switch contacts can be easily inspected.

Features

- The Series 300 is listed to UL 1008 standard for total system loads and CSA standard C22.2 for automatic transfer switches.
- Meets NFPA 110 for Emergency and Standby Power Systems and the National Electrical Code (NEC) Articles 700, 701 and 702.
- Controller is RoHS compliant (Restriction of Hazardous Substances).

UL Listed Withstand & Close-On Ratings

Switch Ratings Amps	Available Symmetrical Amperes RMS		
	When Used With Current Limiting Fuses	Maximum Voltage	When Used With Specific Circuit Breakers
200	200,000	480v/60Hz	22,000

Notes:
1. Current limiting fuse should be class J type through 400 amps: use Class L type above 300 - amp fuse rating
   Current limiting fuse for 3ADTS only 150 - 400 amp should be Class L type
2. Refer to publication 1128 for specific manufacturer's breakers

Fig. 1: ASCO Power Transfer Switch rated 200 amperes

- 30 through 3000 amps in a compact design.
- Available to 600 VAC, single or three phase.
- True double-throw operation: The single solenoid design is inherently inter-locked and prevents contacts from being in contact with both sources at the same time.
- There's no danger of the Series 300 ATS transferring loads to a dead source because the unique ASCO single-solenoid operator derives power to operate from the source to which the load is being transferred.
- Easy to navigate 128x64 graphical LCD display with keypad provides LED indicators for switch position, source availability, not in auto, and alert condition.
- Integrated multilingual user interface for configuration and monitoring.
- Delayed transition operation is now available (Dual Operator Configuration).
- Relay expansion module with extra relays for accessory outputs (Optional).
- Includes soft keys for test function and time delay bypass as standard features.
- Historical event log (Optional).
- Statistical ATS system monitoring information.
- Diagnostic Functions.
- Password protection to prevent unauthorized tampering of settings.
- Adjustable time-delay feature prevents switch from being activated due to momentary utility power outages and generator dips.
- Supplied with solid neutral termination.
- Optional switched neutral pole available.
- Field modification accessory kits available.
- Available for immediate delivery.

ASCO® Series 300 ATS Optional Accessories

Accessory 1UP
UPS back up power to allow controller to run with LCD display for 30 seconds without AC power.

Accessory 11BE Feature Bundle:
A fully programmable engine exerciser with seven independent routines to exercise the engine generator with or without loads, on a daily, weekly, bi-weekly or monthly basis. Engine exerciser setting can be displayed and changed from the user interface keypad.

Event Log display shows the event number, time and date of event, event type, and event reason (if applicable). A maximum of 300 events can be stored.

RS 485 Communications Port Enabled

Common Alarm
Output Contact

Accessory 18RX
Relay expansion module (REX) provides for some commonly used accessory relays, includes one form C contact for source availability of normal (18G), and one form C contact for availability of emergency (18B) (contact rating 5 amperes @ 30Vdc or @125 VAC resistive). Additional output relay is provided, the default is to indicate a common alarm. (See operator's manual for configurable options.)

Accessory 23GA[1] (Single Phase) and 23GB (Three Phase)
Load current metering card measures either single or three phase load current.
Note 1: This feature is not available with a Power Meter Option (135L).

Accessory 44A
Strip Heater with thermostat for extremely cold areas to prevent condensation and freezing of this condensation. External 120 volt power source required.

Accessory 44G
Strip Heater with thermostat, wired to load terminals: 208-240, 360-380, 460-480, 550-600 volts. Contains wiring harnesses for all transfer switch sizes.

Accessory 72EE
Connectivity Module enabling remote monitoring and control capabilities (pages 12-14)

Accessory 73
Surge Suppressor (TVSS) Rated 65kA.

Accessory 62W
Audible alarm with silencing feature to signal each time switch transfers to emergency (may require oversize enclosure depending on accessory combination for "D" frame only).

Accessory 37B
6' Extension harness for units shipped open type to accommodate customer mounting of controls and switch.

Accessory 37C
9' Extension harness for units shipped open type to accommodate customer mounting of controls and switch.

Accessory 135L[2]
Power Meter on load side (includes shorting block and CTs)
Note 2: This feature is not available with Load Current Metering Option (23GA or 23GB).

Accessory 30A[3]
Shedding circuit initiated by opening of a customer-supplied contact.

Accessory 30B*[3]
Load-shedding circuit initiated by removal of customer-supplied voltage. (*Specify Voltage)

Accessory 30AA[3]
Load-shedding circuit initiated by opening of a customer-supplied contact.

Accessory 30BA*[3]
Load-shedding circuit initiated by removal of customer-supplied voltage. (*Specify Voltage)

Note 3: Accessory 30A and 30B* are only available for 3ATS only; accessory 30AA and 30BA* are only available for 3ADTS.

Fig. 10: Strip Heater Kit (Accessory 44G)

Fig. 11: Relay Expansion Module (Accessory 18RX)

Fig. 12: Load Current Card (Accessory 23GA/GB)

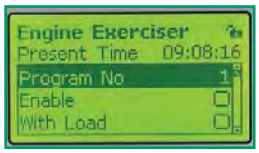

Fig. 13: Programmable Engine Exerciser

Fig. 14: Accessory 1UP UPS Backup Power

Field Conversion Kits for Series 300 Transfer Switches

Kit No.	Description
935147	Feature Bundle Includes Engine Exerciser/Event Log/RS 485/ Common Alarm Output Contact (Acc. 11BE) Dongle
935148	REX Module with Source Availability Contacts (Acc. 18RX)
935149	UPS to allow controller to run for 30 seconds minimum without AC Power (Acc. 1UP)
935150	1/3 Phase load current sensing card only (Acc. 23GA/GB)
K613127-001	Strip Heater (125 watt) 120 volt (Acc. 44A)
K613127-002	Strip Heater (125 watt) 208-480 volt (Acc. 44G)
948551	Quad-Ethernet Module (Acc. 72EE)
K609027	Cable Pull Box (1600-2000 amperes)

ASCO® Series 300 Transfer Switch Ordering Information

To order an ASCO Series 300 Power Transfer Switch, complete the following catalog number:

3	+	A	+	TS	+	A	+	3	+	600	+	N	+	GX	+	C

		Product		Neutral Code		Phase Poles	Amperes	Voltage Code		Controller Code	Enclosure	
A	Automatic	TS	Conventional 2 Position	A	Solid Neutral	2 Poles 1ϕ	Continuous rating	A[3]	115	G	C	Type 1 (Standard)
N	Non-Automatic	DTS	Delayed Transition	B[1]	Switched Neutral	3 Poles 3ϕ	30[2], 70[2], 104[2], 150[5], 200[4,5], 230[2,4,5], 260[2,5], 400[2,5], 600[5], 800[5], 1000[5], 1200[5], 1600[5], 2000[5], 2600[5], 3000[5]	B[3]	120	GX Optional Accessories	F	Type 3R Non-Secure[2]
								C	208		G	Type 4[2] Non-Secure
								D	220		H	Type 4X[2] Non-Secure
								E	230		L	Type 12[2] Non-Secure
								F	240		M	Type 3R Secure
								H	380		N	Type 4 Secure
								J	400		P	Type 4X Secure Double Door 304 SS
								K	415		Q	Type 12 Secure Double Door
								L	440		R	Type 3RX[7,8] Secure Double Door 304 SS
								M	460			
								N	480			
								Q	575			
								R	600			

Notes:

1. Specify neutral code "C" for 260 and 400 amperes only for 3ATS/3DTS
2. Available 30-600 ampere size switches available in non - secure type enclosures
3. 115-120 volt available 30-400 amps only. For other voltages contact ASCO.
4. 200 and 230 amp rated switches for use with copper cable only.
5. Switch sizes 800 - 3000 ampere, and 150 - 400 ampere 3ADTS/3NDTS provided in secure type outdoor enclosures when required.
6. Use 3R for 1200, 2000, 2600, and 3000
7. Type 304 stainless steel is standard. Suitable for indoor or outdoor use where there may be caustic or alkali chemicals in use. To provide an improved reduction in corrosion of salt and some chemicals, optional type 316 stainless steel is recommended. This is the preferred choice for marine environments.
8. Available on switches rated 1200, 2000, 2600, and 3000 amps.
9. When temperatures below 32°F can be experienced, special precautions should be taken, such as the inclusion of strip heaters, to prevent condensation and freezing of this condensation. This is particularly important when environmental (Type 3R,4) are ordered for installation outdoors.
10. Extra shelter protection should be considered for wind blown rain and snow, since ventilated type 3R enclosures due not protect against these conditions.

Series 300 External Power Connections

Sizes UL-Listed Solderless Screw-Type Terminals

Switch Rating (Amps)	Ranges of AL-CU Wire Sizes (Unless Specified Copper Only)
30 - 230[2]	One #14 to 4/0 AWG

Notes:

1. All Series 300 switches are furnished with a solid neutral plate (unless switched neutral configuration is specified) and terminal lugs.
2. 200 and 230 amp rated switches for use with copper cable only. Refer to paragraph 310.15 of the NEC for additional information.
3. Use wire rated 75°C minimum for all power connections.

UL Type 3R, 4 or 12 Enclosure[1,2,3,4,5]

Switch Rating Amps	Phase Poles	Neutral Code	Dimensions, In. (mm)			Approx. Shipping Weight Lb. (kg)
			Width	Height	Depth	
200[3]	3	A	17 1/2 (445)	35 (886)	11 5/8 (295)	87 (40)

Notes:

1. When climate conditions at installation site present condensation risk, special precautions should be taken, such as the inclusion of space heaters, to prevent interior condensation and freezing of this condensation.
2. Neutral code "B" for 230 amperes only.
3. Dimensions for 30 - 200 ampere when furnished with a power meter 18"W - 48"H - 13"D
4. 30-1000 ampere switches are available in secure type enclosures, contact ASCO for details
5. Dimensional data is approximate and subject to change. Certified dimensions available upon request.

Designed to Fit Anywhere

The ASCO SERIES 300 product line represents the most compact design of automatic power transfer switches in the industry. With space in electrical closets being at a premium, the use of wall or floor-mounted ASCO Power Transfer Switches assures designers optimum utilization of space.

All transfer switches through 2000 amps are designed to be completely front accessible. This permits the enclosures to be installed flush to the wall and still allows installation of all power cabling and connections from the front of the switch. Cable entrance plates are also standard on the 1600 and 2000 amp units to install optional side-mounted pull boxes for additional cable bending space.

Fig. 2: ASCO Power Transfer Switch rated 200 amperes

ASCO® Series 300 New Microprocessor Controller

The Series 300's incorporate the group "G" controller with enhanced capabilities for dependable operation in any environment.

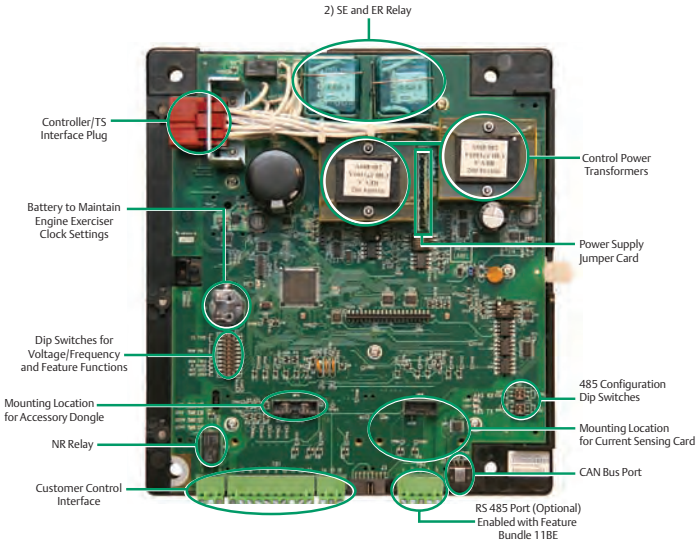

Fig. 8: ASCO Series 300 Microprocessor Controller

Control and Display Panel

- Easy to navigate 128x64 graphical LCD display with keypad provides LED indicators for switch position, source availability, not in auto, and alert condition. It also includes test and time delay bypass soft keys.

Voltage & Frequency Sensing

- 3 — Phase under and over voltage settings on normal and single phase sensing on emergency source.
- Under and over frequency settings on normal and emergency.
- True RMS Voltage Sensing with +/-1% accuracy Frequency Sensing Accuracy is +/- 0.1Hz
- Voltage and Frequency parameters adjustable in 1% increments
- Selecting settings : single or three phase voltage sensing on normal, and single phase sensing on emergency; 50 or 60 Hz
- Load current sensing card (Optional)

Time Delays

- Engine start time delay – delays engine starting signal to override momentary normal source outages – adjustable to 0 to 6 seconds (Feature 1C)
- Transfer to emergency time delay – adjustable 0 to 60 minutes (Feature 2B)
- Emergency source stabilization time delay to ignore momentary transients during initial generator set loading – adjustable 0 to 4 seconds (Feature 1F)
- Re-transfer to normal time delay – adjustable 0 to 10 hours (Feature 3A)
- Unloaded running time delay for engine cooldown – adjustable 0 to 60 minutes (Feature 2E)
- Pre and post signal time delay for selective load disconnect with a programmable bypass on source failures – adjustable 0 to 5 minutes (specify ASCO Optional accessory 31Z)
- Optional fully programmable engine exerciser with seven independent routines to exercise the engine generator, with or without loads, on a daily, weekly, bi weekly or monthly basis (Specify ASCO optional accessory feature bundle 11BE)
- Delay transition load disconnect time delay – adjustable 0 to 5 minutes.

Standard Selectable Features

- Inphase monitor to transfer motor loads, without any intentional off time, to prevent inrush currents from exceeding normal starting levels.
- Engine exerciser to automatically test backup generator each week—with or without load 20 minutes not adjustable.
- Commit to transfer.
- Selective load disconnect control contacts (two provided) which operate with time delay prior to and/or after load transfer and re-transfer.
- 60Hz or 50Hz selectable switch. Three – phase/single - phase selectable switch.

Remote Control Features

External Inputs for connecting:

- Remote test switch.
- Remote contact for test or for peak shaving applications. If emergency source fails, switch will automatically transfer back to normal source if acceptable.
- Inhibit transfer to emergency
- Remote time delay bypass switch emergency to normal

ASCO® Series 300 Group G Offers Sophisticated Functionality

The new Group G controller offers an intuitive, easy to navigate 128*64 graphical LCD display with soft keypad and provides (6) LED indicators

- Switch Position (green for normal, red for emergency LED)
- Source Availability (green for normal, red for emergency LED)
- "Not In Auto" (amber LED)
- Common Alarm (amber LED)

The ASCO group "G" controller is self contained with an integrated display (no other components are required for efficient operation).

The controller allows for open or delayed transition transfer operation (both automatic, and non automatic configurations).

Integrated multilingual user interface for configuration and monitoring (this design approach allows greater application flexibility).

Multiple source sensing capabilities of voltage, frequency (under frequency sensing on normal and emergency sources), and optional current card, single and three phase (Does not require an external metering device).

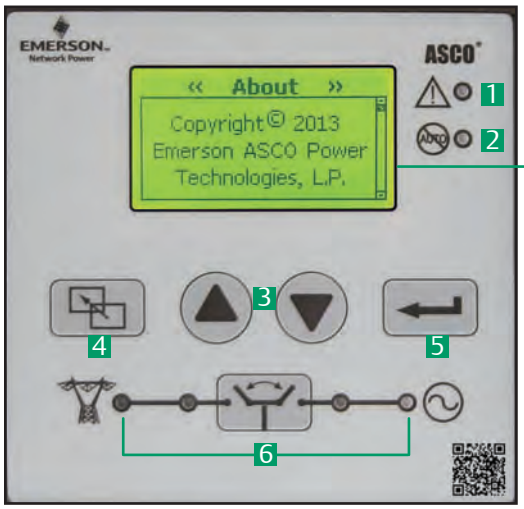

Fig. 9: Door-Mounted Control & Display Panel

1. Common Alarm
2. Not In Auto Indicator
3. Scroll, Up/Down Arrows
4. Escape Key
5. Enter Key
6. LED Source Availability and Switch Position Indicators Transfer / Time Delay Override control pushbutton

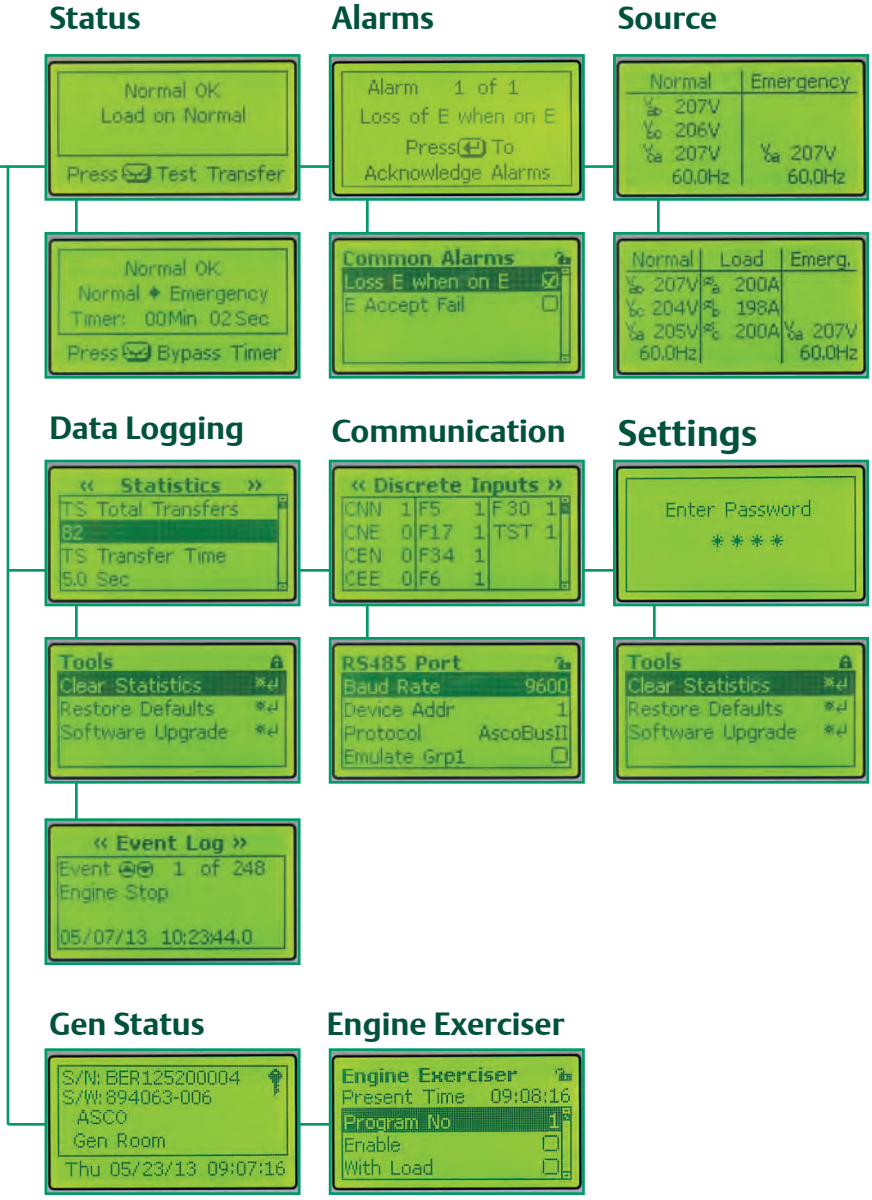

OUTLINE FOR ASCO® 300 SERIES TRANSFER SWITCHES (D3ATS/D3NTS) 30-200 AMPERES, TYPE 3R/4/4X/12 ENCLOSURE

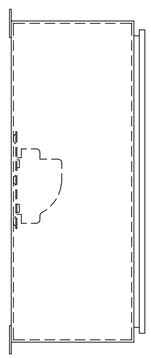

LEFT SIDE

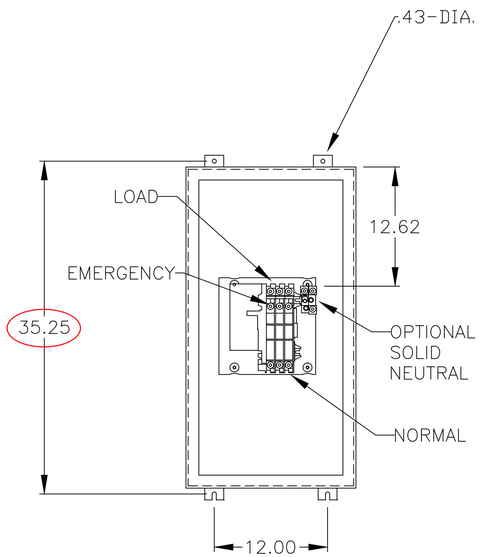

FRONT VIEW
WITHOUT DOOR

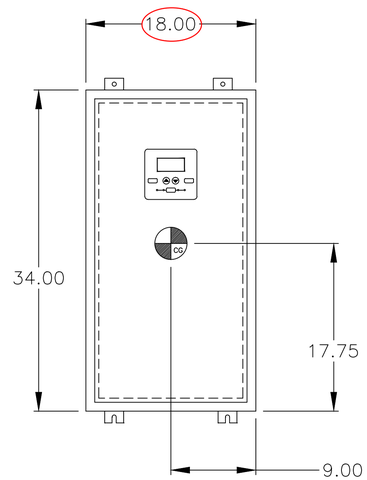

FRONT VIEW
WITH DOOR

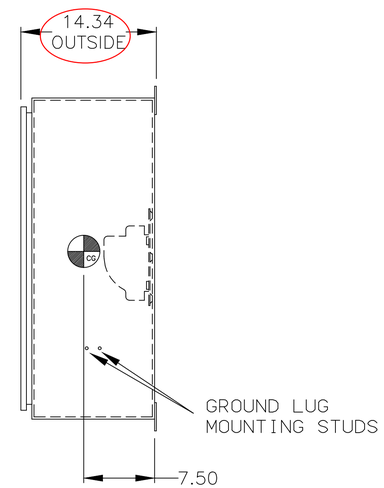

RIGHT SIDE

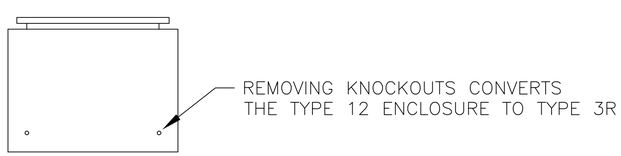

BOTTOM VIEW

GENERAL NOTES

1. TYPE 3R/4/4X/12 WALL MOUNTED ENCLOSURE.
2. STANDARD FINISH: 3R/4/12 – LIGHT GRAY, ANSI 61.
   FINISH TYPE 4X: ENCLOSURE BODY #2B
   DOOR SMOOTH BRUSHED #3.
3. SINGLE DOOR, RIGHT SIDE HINGE, SIDE PADLOCK HASP AND PLATED DOOR CLAMPS ON LEFT SIDE.
4. TERMINALS – SCREW TYPE LUGS FOR EXTERNAL POWER CONNECTIONS.
5. CG = CENTER OF GRAVITY.
6. THREE POLE SWITCH WITH SOLID NEUTRAL SHOWN FOR REFERENCE.
7. NEUTRAL CONFIGURATIONS:

   AN OPTIONAL FULL RATED NEUTRAL CONFIGURATION FOR EACH SOURCE AND THE LOAD MAY BE PROVIDED. WHEN EQUIPPED IT IS IN ONE OF THE FOLLOWING FORMATS AS SPECIFIED BY THE CATALOG NUMBER NO. NEUTRAL TYPE:
   (A) SOLID (COPPER BUS) NEUTRAL

SWITCH RATING (AMPS)	RANGE OF WIRE
30-150	(1) #14 TO 4/0 AWG AL-CU WIRE
200	(1) #14 TO 4/0 AWG COPPER WIRE

APPROXIMATE SHIPPING WEIGHT, LBS (KG)

AMP SIZE	POLES	WEIGHT
30-200	A2 & B2	87 (39)
	A3 & B3	90 (40)

Project Name: Meramec Caverns
ASCO Catalog:
D03ATSA30200NGXF,11BE,18RX,44G

REV. TO SHEET	ECN NO.	BY	APP.	DATE
C	254244 SEE ECN	TR	BK	4/15/15
B	252058 SEE ECN	WK	BK	12/03/14
A	248677 SEE ECN	BWM	SDH	5/30/14
—	245266 ISSUE	BWM	SDH	11/6/13

PROJECT NAME:

COMPOSITE OUTLINE

300 SERIES, D3ATS/D3NTS RATED 30–200 AMPERES
TYPE 3R/4/4X/12 ENCLOSURE

THIRD ANGLE PROJECTION

	BY	DATE
DRAWN BY	BWM	11/6/13
CHECKED		
PROJECT APPROVAL	SDH	11/6/13
FINAL APPROVAL		

MANUFACTURING TOLERANCES TO BE IN ACCORDANCE WITH ASCO PROCEDURE MP-1-003. FOR PLASTIC PARTS SEE MP-1-055

ASSEM. REF. NO.

PROPERTY OF ASCO POWER TECHNOLOGIES. USE PERMITTED FOR OUR WORK ONLY. ALL RIGHTS OF DESIGN OR INVENTION ARE RESERVED.

ASCO® ASCO POWER TECHNOLOGIES, L.P.
FLORHAM PARK, NEW JERSEY 07932 U.S.A.

COMPUTER GENERATED DRAWING

SCALE NONE | SIZE DS

DWG. NO. 978723–002

DRAWING REV. C | ECN NO. 254244 | SHEET 1 OF 1

THREE PHASE WIRING FOR ASCO® 300 SERIES TRANSFER SWITCHES (D3ATS/D3NTS) 30, 70, 104, 150, 200, & 230 AMPERES WITH GROUP G CONTROLS

GENERAL INFORMATION

THIS WIRING APPLIES TO 300 SERIES TRANSFER SWITCHES THAT UTILIZE THE "D" FRAME POWER TRANSFER SWITCH RATED 30 – 230 AMPERES.

THE GROUP G CONTROLLER PROVIDES EITHER AUTOMATIC (D3ATS) OR NON–AUTOMATIC [MANUAL] (D3NTS) OPERATION BASED ON ITS FACTORY SETTING ACCORDING TO THE CUSTOMER ORDER REQUIREMENTS.

THE TYPE OF TRANSFER SWITCH PROVIDED CAN BE DETERMINED FROM THE PRODUCT IDENTIFICATION MARKINGS LOCATED ON BOTH THE POWER TRANSFER SWITCH AND THE COVER OF THE GROUP G CONTROLLER.

ALL OPERATIONAL SETTINGS AND SEQUENCES OF THE GROUP G CONTROLLER AND ITS RELATED OPTIONAL ACCESSORIES (1UP, 18RX, 23G) ARE PROVIDED IN THE USER'S GUIDE, ASCO GROUP G CONTROLLER FOR AUTOMATIC & NON–AUTOMATIC TRANSFER SWITCHES, PART NUMBER 381333–400.

INFORMATION FOR INSTALLATION AND TESTING OF THE TRANSFER SWITCH IS PROVIDED IN THE INSTALLATION MANUAL, ASCO 3ATS & 3NTS, D–DESIGN 30–230 A TRANSFER SWITCHES, PART NUMBER 381333–402.

ENGINE CONTROL CONTACTS

FEATURE 7 & FEATURE 8:
ONE SET OF FORM C CONTACTS "NR" (FEAT. 7 N/C, FEAT. 8 N/O) THAT CHANGE POSITION ON EXPIRATION OF THE FEATURE 1C, OVERRIDE MOMENTARY NORMAL SOURCE OUTAGES TIME DELAY, AND RESET ON EXPIRATION OF THE FEATURE 2E ENGINE COOLDOWN TIME DELAY.
AN AUXILIARY CONTACT THAT IS CLOSED WHEN THE TRANSFER SWITCH IS CONNECTED TO THE EMERGENCY SOURCE, IS CONNECTED ACROSS THE N/C CONTACT (FEATURE 7).

AN ADDITIONAL SET OF ENGINE STARTING CONTACTS ARE AVAILABLE ON THE GROUP G CONTROLLER WHEN THE FEATURE SETTING OF THE CONTROLLER OUTPUT CONTACTS "OP1" IS SET TO OPERATE AS "NR2".

ADDITIONAL, OPTIONAL ENGINE STARTING CONTACTS "NR2" ARE AVAILABLE WHEN OPTIONAL ACCESSORY 18RX (RELAY EXPANSION MODULE) IS INCLUDED IN THE TRANSFER SWITCH ASSEMBLY. OUTPUT CONTACTS "OP2" AND/OR "OP3" PROVIDE THE ENGINE STARTING FUNCTION WHEN THE FEATURE SETTING OF EACH IS SET TO OPERATE AS "NR2".

CONTACTS ARE RATED 5 AMPS RESISTIVE AT 30 VDC MAXIMUM, 100 mA AT 5 VDC MINIMUM.

REFER TO USER'S GUIDE, ASCO GROUP G CONTROLLER FOR AUTOMATIC & NON–AUTOMATIC TRANSFER SWITCHES, PART NUMBER 381333–400 FOR SETTING INFORMATION.

LOAD DISCONNECT FEATURE

FEATURE 31: INCLUDES SUB–FEATURES 31F, 31G, 31M, 31N
A SET OF FORM C CONTACTS ARE PROVIDED ON THE GROUP G CONTROLLER AS "OP1". WHEN THE FEATURE SETTING OF "OP1" IS SET TO OPERATE THE CONTACTS AS "FEATURE 31", THE TIME DELAY SETTINGS OF THE SUB–FEATURES ARE AVAILABLE.

"OP1" CAN BE SET TO OPERATE TO PROVIDE THE FOLLOWING FUNCTIONS USING THE TIME DELAY SETTINGS ASSOCIATED WITH EACH SUB–FEATURE;

31F – NORMAL TO EMERGENCY PRE–TRANSFER SIGNAL
31G – EMERGENCY TO NORMAL PRE–TRANSFER SIGNAL
31M – NORMAL TO EMERGENCY POST–TRANSFER SIGNAL
31N – EMERGENCY TO NORMAL POST TRANSFER SIGNAL

THE "OP1" OUTPUT CONTACTS CHANGE POSITION FOLLOWING EACH OF THE ABOVE TIME DELAYS.

ADDITIONAL LOAD DISCONNECT CONTACTS, "FEATURE 31" ARE AVAILABLE WHEN OPTIONAL ACCESSORY 18RX (RELAY EXPANSION MODULE) IS INCLUDED IN THE TRANSFER SWITCH ASSEMBLY. OUTPUT CONTACTS "OP2 AND/OR "OP3" WILL PROVIDE LOAD DISCONNECT FUNCTIONS WHEN THE FEATURE SETTING OF EACH IS SET TO OPERATE AS "FEATURE 31".

ALL OUTPUT CONTACTS ("OP1", "OP2", "OP3") SET TO OPERATE AS "FEATURE 31", SHARE THE COMMON TIME DELAY SETTINGS OF SUB–FEATURES 31F, 31G, 31M, AND 31N.

CONTACTS ARE RATED 5 AMPS RESISTIVE AT 30 VDC MAXIMUM, 100 mA AT 5 VDC MINIMUM.

REFER TO USER'S GUIDE, ASCO GROUP G CONTROLLER FOR AUTOMATIC & NON–AUTOMATIC TRANSFER SWITCHES, PART NUMBER 381333–400 FOR SETTING INFORMATION.

INPHASE TRANSFER FEATURE FOR LOAD TRANSFER

INPHASE TRANSFER CONTROL INITIATES AN INPHASE TRANSFER OF LOADS BETWEEN LIVE SOURCES. THIS IS USED TO PREVENT NUISANCE TRIPPING OF DISTRIBUTION CIRCUIT BREAKERS AND POSSIBLE DAMAGE TO MECHANICAL LOADS ASSOCIATED WITH OUT OF PHASE TRANSFER.

REFER TO USER'S GUIDE, ASCO GROUP G CONTROLLER FOR AUTOMATIC & NON–AUTOMATIC TRANSFER SWITCHES, PART NUMBER 381333–400 FOR SETTING INFORMATION.

SOURCE AVAILABILITY SIGNALS

SIGNALS INDICATING THE AVAILABILITY OF THE NORMAL & EMERGENCY SOURCES IS PROVIDED WHEN OPTIONAL ACCESSORY 18RX (RELAY EXPANSION MODULE) IS INCLUDED IN THE TRANSFER SWITCH ASSEMBLY. OUTPUT CONTACTS "RL5" (EMERGENCY SOURCE AVAILABLE) AND "RL6" (NORMAL SOURCE AVAILABLE) CHANGE POSITION WHEN THE SOURCE IS ACCEPTABLE.

CONTACTS ARE RATED 5 AMPS RESISTIVE AT 30 VDC MAXIMUM, 100 mA AT 5 VDC MINIMUM.

COMMON ALARM & NOT IN AUTO SIGNALING FEATURES

A SET OF FORM C CONTACTS IS PROVIDED ON THE GROUP G CONTROLLER AS "OP1". THE FEATURE SETTING OF "OP1" CAN BE SET TO OPERATE THE CONTACTS AS A "NOT IN AUTO" SIGNAL.

WHEN "OP1" IS SET FOR "NOT IN AUTO", THE OUTPUT CONTACTS CHANGE POSITION WHEN THE TRANSFER IS BEING INHIBITED FROM TRANSFERRING TO THE EMERGENCY SOURCE (FEATURE 34B) OR THE TRANSFER SWITCH HAS BEEN SET FOR NON–AUTOMATIC (MANUAL) OPERATION.

WHEN OPTIONAL ACCESSORY 11BE "SOFTWARE BUNDLE" IS PART OF THE TRANSFER SWITCH ASSEMBLY, "OP1" MAY ALTERNATIVELY SET FOR A "COMMON ALARM" SIGNAL. THE OUTPUT CONTACTS CHANGE POSITION WHEN A "COMMON ALARM" IS NOT PRESENT AND RESET WHEN A "COMMON ALARM" CONDITION IS PRESENT. THE "COMMON ALARM" SIGNAL CONDITIONS ARE SELECTABLE.

ADDITIONAL "COMMON ALARM" AND "NOT IN AUTO" CONTACTS ARE AVAILABLE WHEN OPTIONAL ACCESSORY 18RX (RELAY EXPANSION MODULE) IS INCLUDED IN THE TRANSFER SWITCH ASSEMBLY. OUTPUT CONTACTS "OP2 AND/OR "OP3" WILL PROVIDE SIGNAL FUNCTIONS WHEN THE FEATURE SETTING OF EACH IS SET TO OPERATE AS "COMMON ALARM" OR "NOT IN AUTO".

CONTACTS ARE RATED 5 AMPS RESISTIVE AT 30 VDC MAXIMUM, 100 mA AT 5 VDC MINIMUM.

REFER TO USER'S GUIDE, ASCO GROUP G CONTROLLER FOR AUTOMATIC & NON–AUTOMATIC TRANSFER SWITCHES, PART NUMBER 381333–400 FOR SETTING INFORMATION.

EXTERNAL POWER SUPPLY COMPATIBILITY

USE OF AN EXTERNAL POWER SUPPLY IS USEFUL WHEN REQUIRED TO EXTEND THE FOLLOWING CONTROLLER TIME DELAYS BEYOND 6 SECONDS;

FEATURE 1C – OVERRIDE MOMENTARY NORMAL SOURCE OUTAGES
FEATURE 1F – OVERRIDE MOMENTARY EMERGENCY SOURCE OUTAGES

AN EXTERNAL POWER SUPPLY IS ALSO USEFUL WHEN THE TRANSFER SWITCH IS USED WITH COMMUNICATIONS FEATURES BY ENABLING THE CONTROLLER TO CONTINUE COMMUNICATING.

AN EXTERNAL POWER SOURCE MAY BE PROVIDED TO THE CONTROLLER, UNTIL THE NORMAL SOURCE OR EMERGENCY SOURCE IS AVAILABLE, BY USE OF;

– AN EXTERNAL 24 VDC POWER SUPPLY WITH ACCESSORY 18RX (RELAY EXPANSION MODULE)
OR
– OPTIONAL ACCESSORY 1UP (UNINTERRUPTIBLE POWER SUPPLY MODULE)

EXTERNAL 24 VDC POWER SUPPLY "1G":
AN EXTERNAL 24 VDC POWER SUPPLY MAY BE USED TO POWER THE CONTROLLER WHEN ACCESSORY 18RX (RELAY EXPANSION MODULE) IS INCLUDED IN THE TRANSFER SWITCH ASSEMBLY. OUTPUT CONTACTS "OP2" WILL PROVIDE EXTERNAL 24 VDC POWER SUPPLY FUNCTIONALITY WHEN ITS FEATURE SETTING IS SET TO OPERATE AS "1G". ADDITIONALLY, JUMPERS MUST BE RECONFIGURED ON ACCESSORY 18RX (RELAY EXPANSION MODULE) TO ENABLE THIS FUNCTION AS FOLLOWS;

REMOVE JUMPERS "J1" 1–2 & "J1" 3–4
CONNECT JUMPERS "J1" 5–7 & "J1" 6–8

THE OUTPUT CONTACTS CHANGE POSITION WHEN EITHER THE NORMAL SOURCE OR EMERGENCY SOURCE IS AVAILABLE AND RESET WHEN NEITHER SOURCE IS AVAILABLE. THE "OP2" N/C CONTACT SWITCHES CUSTOMER PROVIDED +24 VDC FROM THE EXTERNAL POWER SUPPLY TO THE CONTROLLER.

REFER TO USER'S GUIDE, ASCO GROUP G CONTROLLER FOR AUTOMATIC & NON–AUTOMATIC TRANSFER SWITCHES, PART NUMBER 381333–400 FOR SETTING INFORMATION.

ACCESSORY 1UP (UNINTERRUPTIBLE POWER SUPPLY):
WHEN OPTIONAL ACCESSORY 1UP IS INCLUDED IN THE TRANSFER SWITCH ASSEMBLY, THE CONTROLLER IS PROVIDED WITH LIMITED RESERVE POWER (APPROXIMATELY 3 MINUTES).

LOAD CURRENT METERING

WHEN OPTIONAL ACCESSORY 23GB IS PART OF THE TRANSFER SWITCH ASSEMBLY, THREE PHASE CURRENT MEASUREMENTS ARE AVAILABLE FOR DISPLAY ON THE GROUP G CONTROLLER.

REFER TO USER'S GUIDE, ASCO GROUP G CONTROLLER FOR AUTOMATIC & NON–AUTOMATIC TRANSFER SWITCHES, PART NUMBER 381333–400 FOR INFORMATION ON USE.

FOUR-FUNCTION SOFTWARE BUNDLE

WHEN OPTIONAL ACCESSORY 11BE IS PART OF THE TRANSFER SWITCH ASSEMBLY, A FOUR–FUNCTION SOFTWARE BUNDLE IS AVAILABLE TO PERFORM THE FOLLOWING FUNCTIONS;

– SERIAL COMMUNICATIONS (RS–485)
– PROGRAMMABLE ENGINE EXERCISER
– EVENT LOG
– COMMON ALARM SIGNAL CAPABILITY ON GROUP G CONTROLLER "OP1" OUTPUT.

REFER TO USER'S GUIDE, ASCO GROUP G CONTROLLER FOR AUTOMATIC & NON–AUTOMATIC TRANSFER SWITCHES, PART NUMBER 381333–400 FOR INFORMATION ON THESE FUNCTIONS.

NON-AUTOMATIC (MANUAL) OPERATION

TRANSFER SWITCH ASSEMBLIES FACTORY SET FOR NON–AUTOMATIC OPERATION PROVIDE USER INITIATED, ELECTRICAL OPERATION OF THE TRANSFER SWITCH TO EITHER AVAILABLE SOURCE. THE TRANSFER SWITCH ASSEMBLY IS PHYSICALLY IDENTICAL TO THAT OF THE AUTOMATIC TYPE.

WHEN THE TRANSFER SWITCH IS SET FOR NON–AUTOMATIC OPERATION, A CUSTOMER PROVIDED SELECTOR SWITCH MAY BE USED TO OPERATE IT FROM A REMOTE LOCATION.

REMOTE CONTROL FEATURES

THE FOLLOWING CONTROL PANEL INPUTS PROVIDE REMOTE CONTROL FUNCTIONS FOR THE TRANSFER SWITCH. EACH FUNCTION CAN BE IMPLEMENTED BY THE CUSTOMER PROVIDING THE FORM OF CONTROL DESCRIBED. EACH CONTROL CONTACT MUST BE SUITABLE FOR A 5 VDC LOW ENERGY CIRCUIT.

EXTERNAL FEATURE 17: REMOTE TRANSFER TO EMERGENCY FEATURE (FOR AUTOMATIC TRANSFER TYPE ONLY) – REQUIRES A CUSTOMER SUPPLIED, NORMALLY CLOSED CONTACT. OPENING OF THE CONTACT CAUSES ENGINE START AND TRANSFER TO THE EMERGENCY SOURCE. RE–CLOSURE OF THE CONTACT ACTIVATES THE FEATURE 3A "RETRANSFER TO NORMAL (IF JUST TEST) TIME DELAY PRIOR TO RETRANSFER. IN THE EVENT THAT THE EMERGENCY SOURCE FAILS WHILE THE TRANSFER SWITCH IS CONNECTED TO EMERGENCY AND THE CUSTOMER SUPPLIED CONTACT IS OPEN, THE TRANSFER SWITCH WILL AUTOMATICALLY RETRANSFER TO THE NORMAL SOURCE.

EXTERNAL FEATURE 6B: REMOTE BYPASS OF RETRANSFER TO NORMAL TIME DELAY – REQUIRES A CUSTOMER SUPPLIED, NORMALLY CLOSED CONTACT. OPENING OF THE CONTACT BYPASSES FEATURE 3A RETRANSFER TO NORMAL DELAY IF ACTIVE.

REFER TO USER'S GUIDE, ASCO GROUP G CONTROLLER FOR AUTOMATIC & NON–AUTOMATIC TRANSFER SWITCHES, PART NUMBER 381333–400 FOR SETTING INFORMATION.

NOTES

1. SWITCH SHOWN DE–ENERGIZED CONNECTED TO NORMAL SOURCE.
2. DEVICE SYMBOLS AND DESIGNATIONS ARE IN ACCORDANCE WITH NEMA PUB. ICS 1, PART 1–101A.
3. ALL WIRING IS #16 AWG, TINNED, STRANDED COPPER UNLESS OTHERWISE INDICATED.
4. ○ INDICATES CUSTOMER CONNECTION POINTS.
5. ● INDICATES FACTORY CONNECTION POINTS.
6. CONNECTION POINTS THAT HAVE BOTH CUSTOMER CONNECTIONS AND FACTORY CONNECTIONS ARE SHOWN OPEN AS CUSTOMER CONNECTION POINTS.
7. THE TRANSFER UNIT IS MOUNTED ON THE BACK INSIDE SURFACE OF THE ENCLOSURE. THE CONTROL PANEL AND ANY OPTIONAL ACCESSORIES ARE MOUNTED ON THE INSIDE SURFACE OF THE DOOR.
8. AN OPERATOR'S MANUAL IS FURNISHED WITH EACH AUTOMATIC TRANSFER SWITCH. REFER TO THIS PUBLICATION PRIOR TO INSTALLATION AND OPERATION OF THE SWITCH.
8. GROUND STRAP ON CONTROL PANEL IS AFFIXED TO CHASSIS (ENCLOSURE) AT LOWER LEFT CONTROL PANEL MOUNTING STUD.

CATALOG NUMBER SUFFIXES

TS FRAME	CATALOG TYPE	NEUTRAL TYPE	PHASE POLES	AMPS	VOLT CODE	CONTROLLER	OPTIONAL ACCESSORY	ENCLOSURE CODE
D	3ATS 3NTS	A B C	3	30 70 104 150 200* 230*	C D E F G H J K L M N P Q R	G	X	C F G H L M N P Q BLANK FOR OPEN TYPE
							BLANK FOR NONE	

EXPLANATION OF CATALOG NUMBER CODES

NEUTRAL TYPE CODE	NEUTRAL TYPE DESCRIPTION
A	SOLID
B	SWITCHING
C	OVERLAPPING

VOLTAGE CODES 3 PHASE (3 OR 4 WIRE) 50 OR 60 Hz CODE	NOMINAL VOLTAGE
C	208
D	220
E	230
F	240
G	277
H	380
J	400
K	415
L	440
M	460
N	480
P	550*
Q	575*
R	600*

* 200 & 230 AMP SIZES ARE 480V MAX.

ENCLOSURE CODES

CODE	TYPE	DESCRIPTION
BLANK		OPEN TYPE (NO ENCLOSURE)
C	1	GENERAL PURPOSE, INDOOR
F	3R	OUTDOOR, RAINPROOF, SLEET & ICE RESISTANT
G	4	INDOOR/OUTDOOR, WATERTIGHT & DUSTTIGHT
H	4X	TYPE 4 PLUS CORROSION RESISTANCE (STAINLESS STEEL)
L	12	INDOOR, INDUSTRIAL ENVIRONMENTS, OILTIGHT & DUSTTIGHT
		(SECURE ENCLOSURES)
M	3R	OUTDOOR, RAINPROOF, SLEET & ICE RESISTANT
N	4	INDOOR/OUTDOOR, WATERTIGHT & DUSTTIGHT
P	4X	TYPE 4 PLUS CORROSION RESISTANCE (STAINLESS STEEL)
Q	12	INDOOR, INDUSTRIAL ENVIRONMENTS, OILTIGHT & DUSTTIGHT

Project Name: Meramec Caverns
ASCO Catalog: D03ATSA30200NGXF,11BE,18RX,44G

CATALOG NUMBER
ASCO® CERTIFIED TO
S.O. _____
BY _____
DATE _____

FORM REV C

REV. TO SHEET	ECN NO.	BY	APP.	DATE
D	249616	AE	BK	7/20/14
	SEE ECN			
C	247770	SDH	SDH	4/14/14
	SEE ECN			
B	246325	AE	BK	01/16/14
	SEE ECN			
A	242580	SDH	SDH	5/30/13
	SEE ECN			
—	242255	SDH	SDH	5/6/13
	ISSUE			

PROJECT NAME:

WIRING DIAGRAM
300 SERIES D3ATS/D3NTS, THREE PHASE 30–230 AMPS
"D" FRAME, GROUP G CONTROLS

THIRD ANGLE PROJECTION

	BY	DATE
DRAWN BY	SDH	5/6/13
CHECKED		
PROJECT APPROVAL		
FINAL APPROVAL	SDH	5/6/13

MANUFACTURING TOLERANCES TO BE IN ACCORDANCE WITH ASCO PROCEDURE MP–I–003. FOR PLASTIC PARTS SEE MP–I–055

ASSEM. REF. NO.

PROPERTY OF ASCO POWER TECHNOLOGIES. USE PERMITTED FOR OUR WORK ONLY. ALL RIGHTS OF DESIGN OR INVENTION ARE RESERVED.

ASCO® ASCO POWER TECHNOLOGIES, L.P.
FLORHAM PARK, NEW JERSEY 07932 U.S.A.

COMPUTER GENERATED DRAWING
SCALE NONE SIZE DS
DWG. NO. 978741
DRAWING REV. D ECN NO. 249616 SHEET 1 OF 6

FIELD CONNECTIONS

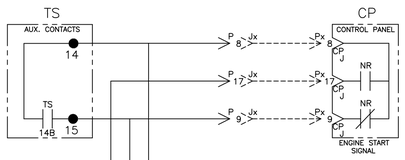

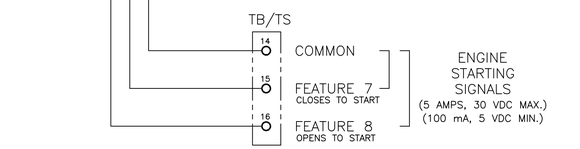

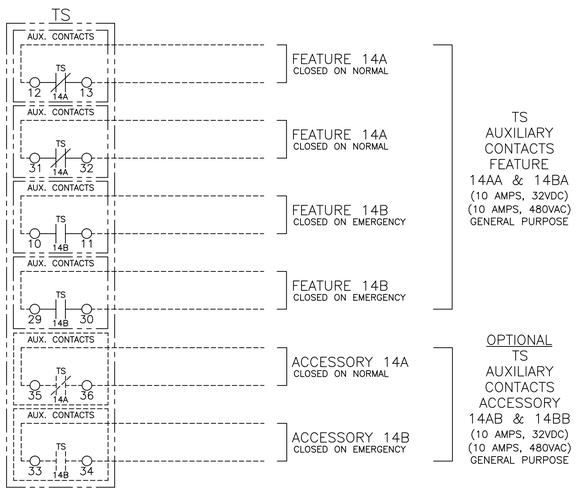

CONTROLLER REMOTE CONTROL FEATURES

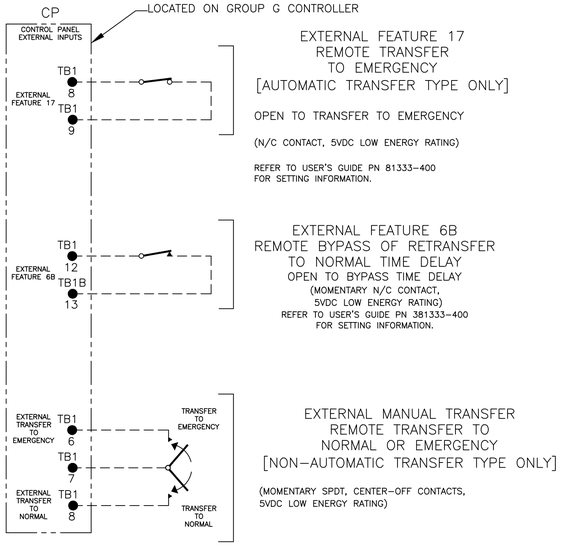

OPTIONAL ACCESSORY 18RX (RELAY EXPANSION MODULE)

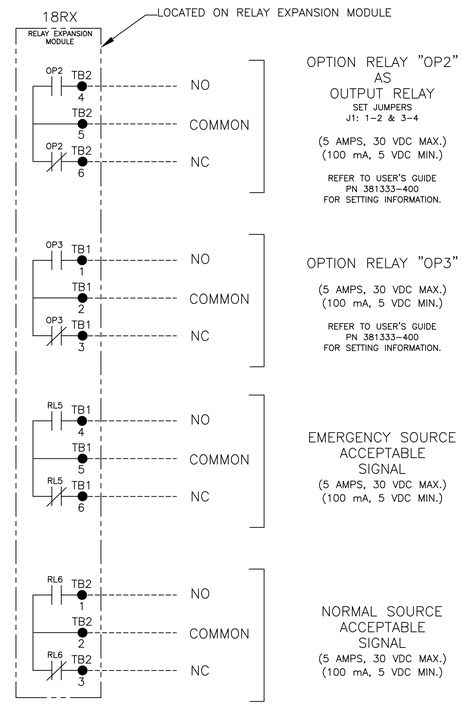

OPTIONAL ACCESSORY 18RX1 (SECOND RELAY EXPANSION MODULE)

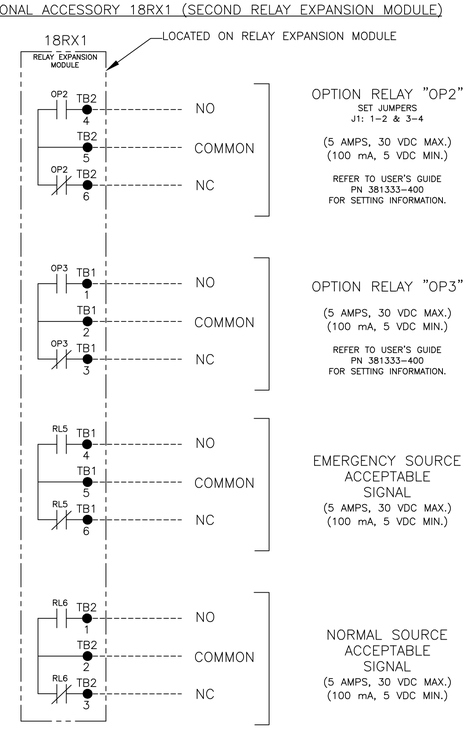

"OP2" OPTIONAL USES

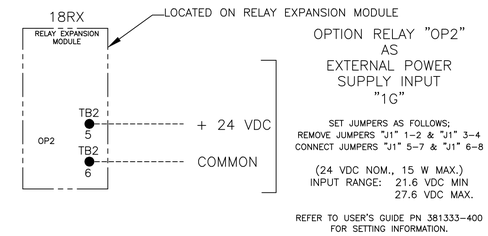

CONTROLLER OPTION RELAY "OP1" (STANDARD)

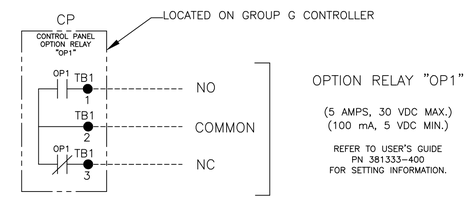

RS485 SERIAL COMMUNICATIONS OPTION

AVAILABLE WITH OPTIONAL ACCESSORY 11BE: FOUR-FUNCTION SOFTWARE BUNDLE
REFER TO USER'S GUIDE PN 381333-400 FOR SETTING INFORMATION.

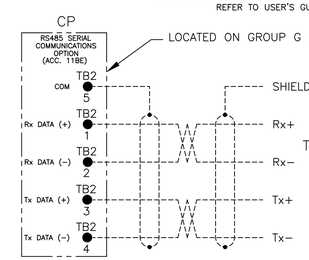

NOTES:
1. EARTH GROUND SHIELD AT HOST DEVICE ONLY.
2. FIELD WIRING: USE UL LISTED, STRANDED, TWISTED PAIRS, OVERALL FOIL SHIELD WITH STRANDED DRAIN WIRE SUITABLE FOR RS422 EQUIVALENT TO:

(STANDARD 80°C) BELDEN 9842 OR 9829 OR ALPHA 6202C OR 6222C

(PLENUM RATED) BELDEN 89729 OR 82729 OR ALPHA 58902

Project Name: Meramec Caverns
ASCO Catalog: D03ATSA30200NGXF,11BE,18RX,44G

REV. TO SHEET	ECN NO.	BY	APP.	DATE
D	249616 SEE ECN	AE	BK	7/20/14
C	247770 SEE ECN	SDH	SDH	4/14/14
B	246325 SEE ECN	AE	BK	01/16/14
A	242580 SEE ECN	SDH	SDH	5/30/13
—	242255 ISSUE	SDH	SDH	5/6/13

PROJECT NAME:

WIRING DIAGRAM

300 SERIES D3ATS/D3NTS, THREE PHASE 30-230 AMPS
"D" FRAME, GROUP G CONTROLS

THIRD ANGLE PROJECTION

	BY	DATE
DRAWN BY	SDH	5/6/13
CHECKED		
PROJECT APPROVAL		
FINAL APPROVAL	SDH	5/6/13

MANUFACTURING TOLERANCES TO BE IN ACCORDANCE WITH ASCO PROCEDURE MP-I-003. FOR PLASTIC PARTS SEE MP-I-055

ASSEM. REF. NO.

PROPERTY OF ASCO POWER TECHNOLOGIES. USE PERMITTED FOR OUR WORK ONLY. ALL RIGHTS OF DESIGN OR INVENTION ARE RESERVED.

ASCO ASCO POWER TECHNOLOGIES, L.P. FLORHAM PARK, NEW JERSEY 07932 U.S.A.

COMPUTER GENERATED DRAWING

SCALE NONE SIZE DS

DWG. NO. 978741

DRAWING REV. D ECN NO. 249616 SHEET 2 OF 6

MAIN POWER POLES

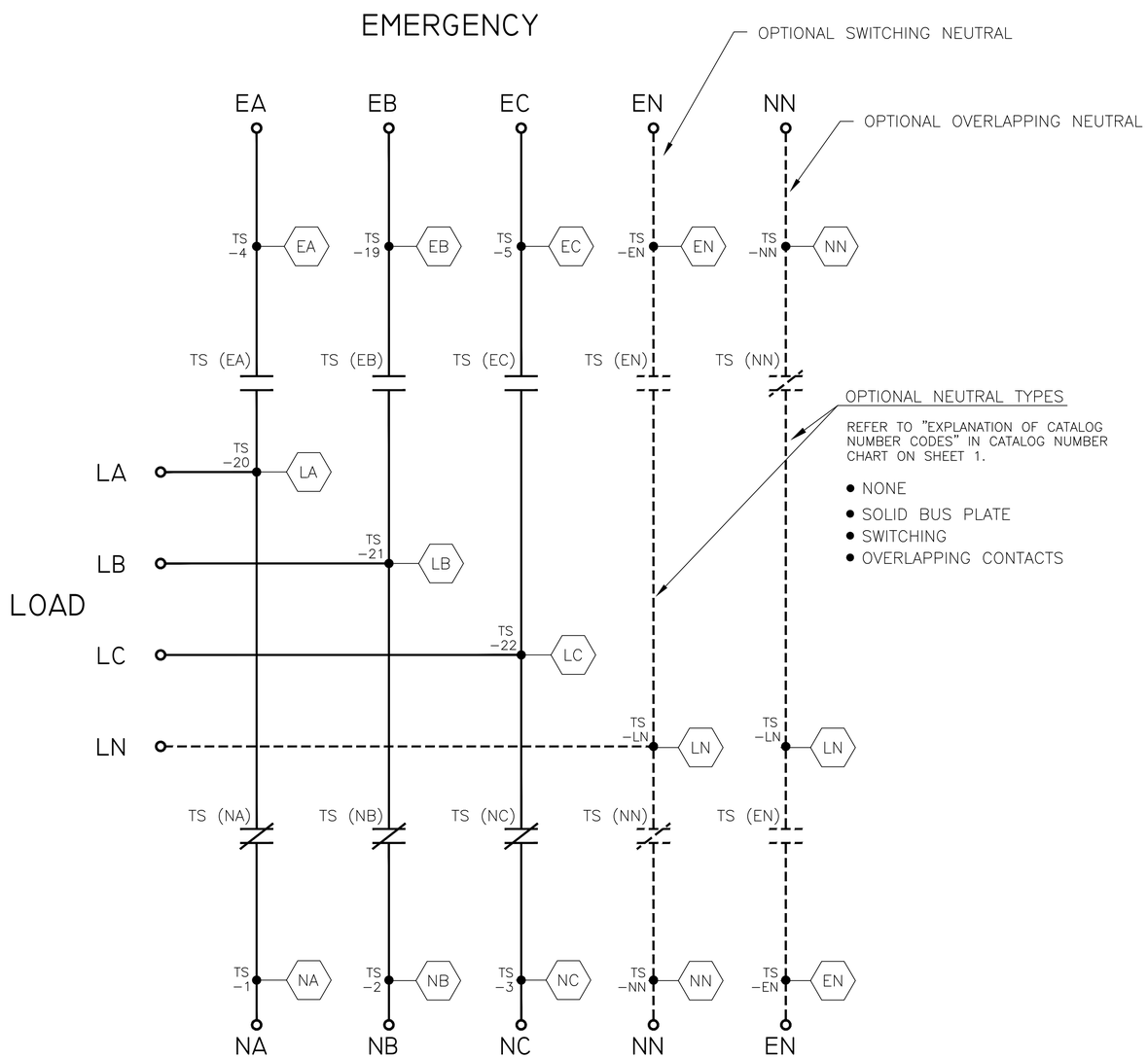

NOTE:
ATS SHOWN CLOSED ON NORMAL SOURCE.

TS OPERATOR CIRCUIT

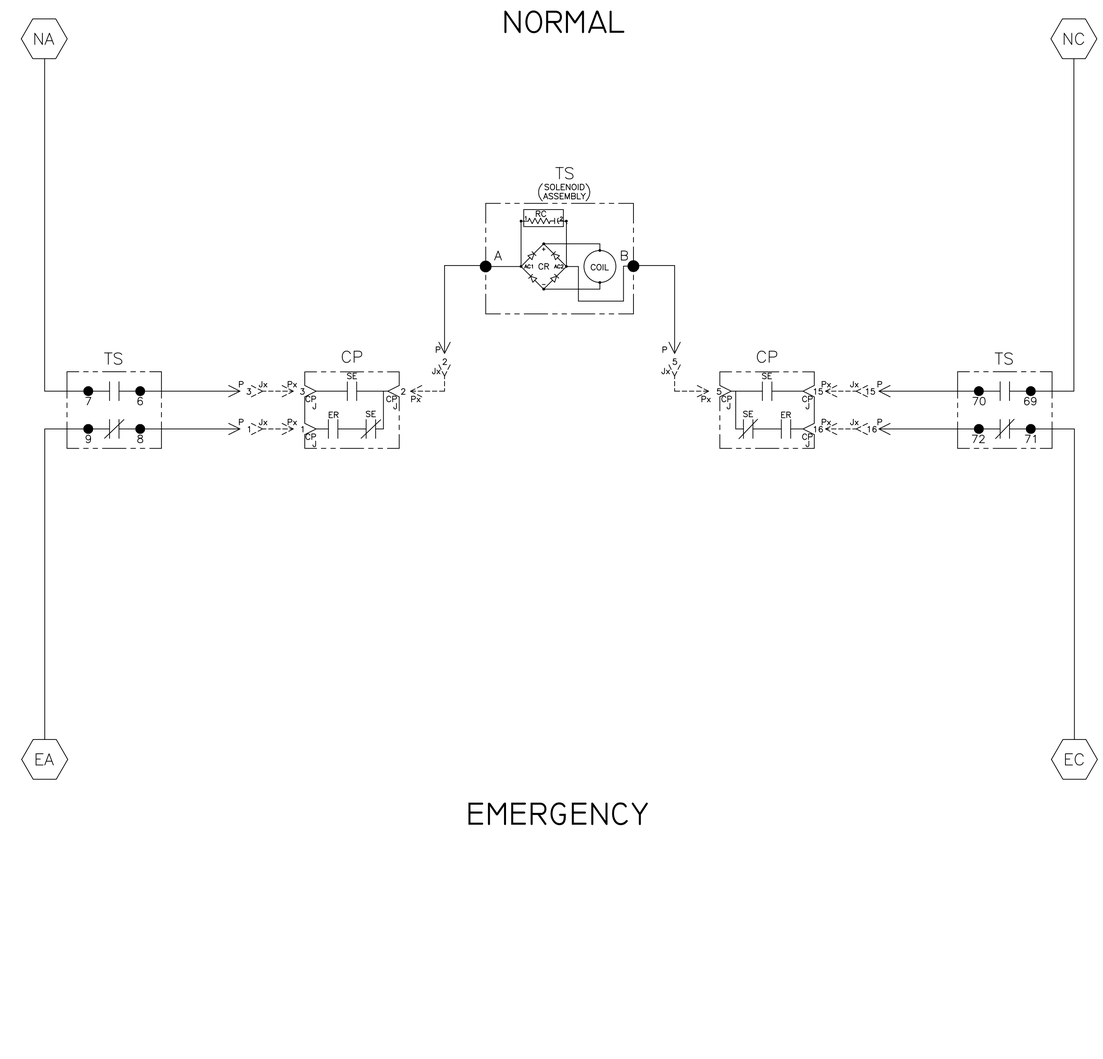

TS CONTROL CONTACTS					
TS	SOLENOID POSITION				
	CLOSED NORMAL	BEFORE TDC>	>	<	BEFORE <TDC	CLOSED EMERG
6–7					X	X
69–70					X	X
8–9	X	X				
71–72	X	X				

TDC (TOP DEAD CENTER)
TRANSFER SWITCH TEST & ADJUSTMENT PROCEDURE SPECIFIES CONTROL CUT–OFF (CONTACT OPENING) SETTING.

Project Name: Meramec Caverns
ASCO Catalog: D03ATSA30200NGXF,11BE,18RX,44G

REV. TO SHEET	ECN NO.	BY	APP.	DATE
D	249616 SEE ECN	AE	BK	7/20/14
C	247770 SEE ECN	SDH	SDH	4/14/14
B	246325 SEE ECN	AE	BK	01/16/14
A	242580 SEE ECN	SDH	SDH	5/30/13
—	242255 ISSUE	SDH	SDH	5/6/13

PROJECT NAME:

WIRING DIAGRAM
300 SERIES D3ATS/D3NTS THREE PHASE 30–230 AMPS
"D" FRAME, GROUP G CONTROLS

THIRD ANGLE PROJECTION

	BY	DATE
DRAWN BY	SDH	5/6/13
CHECKED		
PROJECT APPROVAL		
FINAL APPROVAL	SDH	5/6/13

MANUFACTURING TOLERANCES TO BE IN ACCORDANCE WITH ASCO PROCEDURE MP–I–003. FOR PLASTIC PARTS SEE MP–I–055

ASSEM. REF. NO.

PROPERTY OF ASCO POWER TECHNOLOGIES. USE PERMITTED FOR OUR WORK ONLY. ALL RIGHTS OF DESIGN OR INVENTION ARE RESERVED.

ASCO E ASCO POWER TECHNOLOGIES, L.P. FLORHAM PARK, NEW JERSEY 07932 U.S.A.

COMPUTER GENERATED DRAWING

SCALE NONE | SIZE DS

DWG. NO. 978741

DRAWING REV. D | ECN NO. 249616 | SHEET 3 OF 6

NORMAL SOURCE CIRCUITS

NORMAL

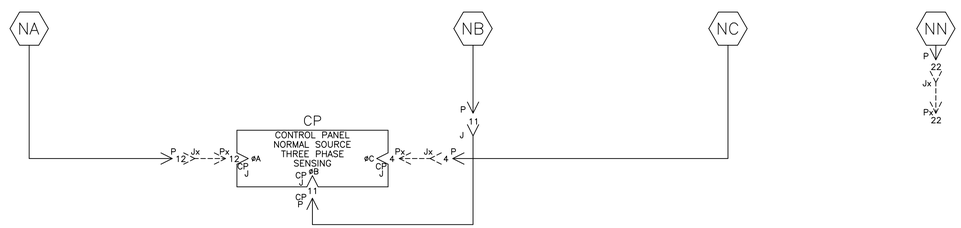

EMERGENCY SOURCE CIRCUITS

EMERGENCY

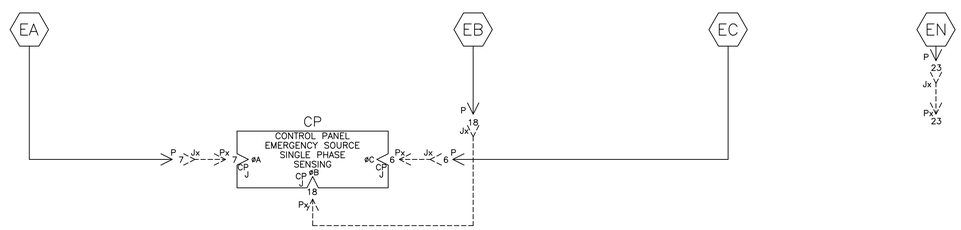

LOAD TERMINAL CIRCUITS

LOAD

CONTROL SIGNALS & INDICATION

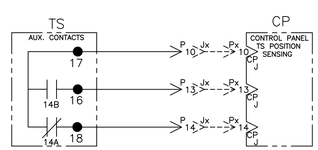

ADDITIONAL CIRCUITS

OPTIONAL ACCESSORY 23GB (LOAD CURRENT METERING)

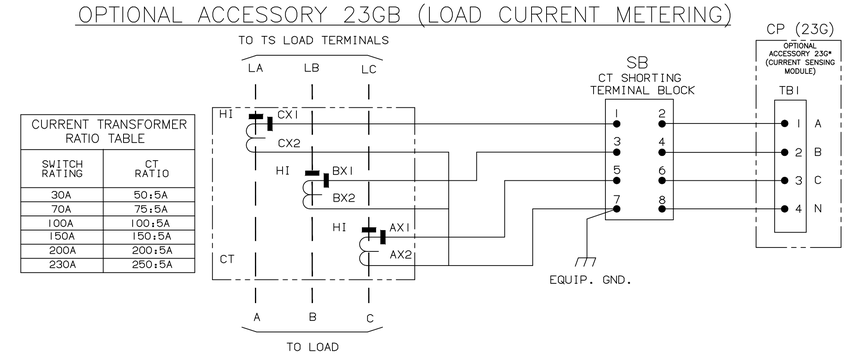

CURRENT TRANSFORMER RATIO TABLE	
SWITCH RATING	CT RATIO
30A	50:5A
70A	75:5A
100A	100:5A
150A	150:5A
200A	200:5A
230A	250:5A

Project Name: Meramec Caverns
ASCO Catalog: D03ATSA30200NGXF,11BE,18RX,44G

REV. TO SHEET	ECN NO.	BY	APP.	DATE
D	249616	AE	BK	7/20/14
	SEE ECN			
C	247770	SDH	SDH	4/14/14
	SEE ECN			
B	246325	AE	BK	01/16/14
	SEE ECN			
A	242580	SDH	SDH	5/30/13
	SEE ECN			
—	242255	SDH	SDH	5/6/13
	ISSUE			

PROJECT NAME:

WIRING | DIAGRAM

300 SERIES D3ATS/D3NTS THREE PHASE 30–230 AMPS
"D" FRAME, GROUP G CONTROLS

THIRD ANGLE PROJECTION

	BY	DATE
DRAWN BY	SDH	5/16/13
CHECKED		
PROJECT APPROVAL		
FINAL APPROVAL	SDH	5/16/13

MANUFACTURING TOLERANCES TO BE IN ACCORDANCE WITH ASCO PROCEDURE MP-I-003. FOR PLASTIC PARTS SEE MP-I-055

ASSEM. REF. NO.

PROPERTY OF ASCO POWER TECHNOLOGIES. USE PERMITTED FOR OUR WORK ONLY. ALL RIGHTS OF DESIGN OR INVENTION ARE RESERVED.

ASCO E — ASCO POWER TECHNOLOGIES, L.P. FLORHAM PARK, NEW JERSEY 07932 U.S.A.

COMPUTER GENERATED DRAWING

SCALE | SIZE DS

DWG. NO. 978741

DRAWING REV. D | ECN NO. 249616 | SHEET 4 OF 6

PHYSICAL DIAGRAM

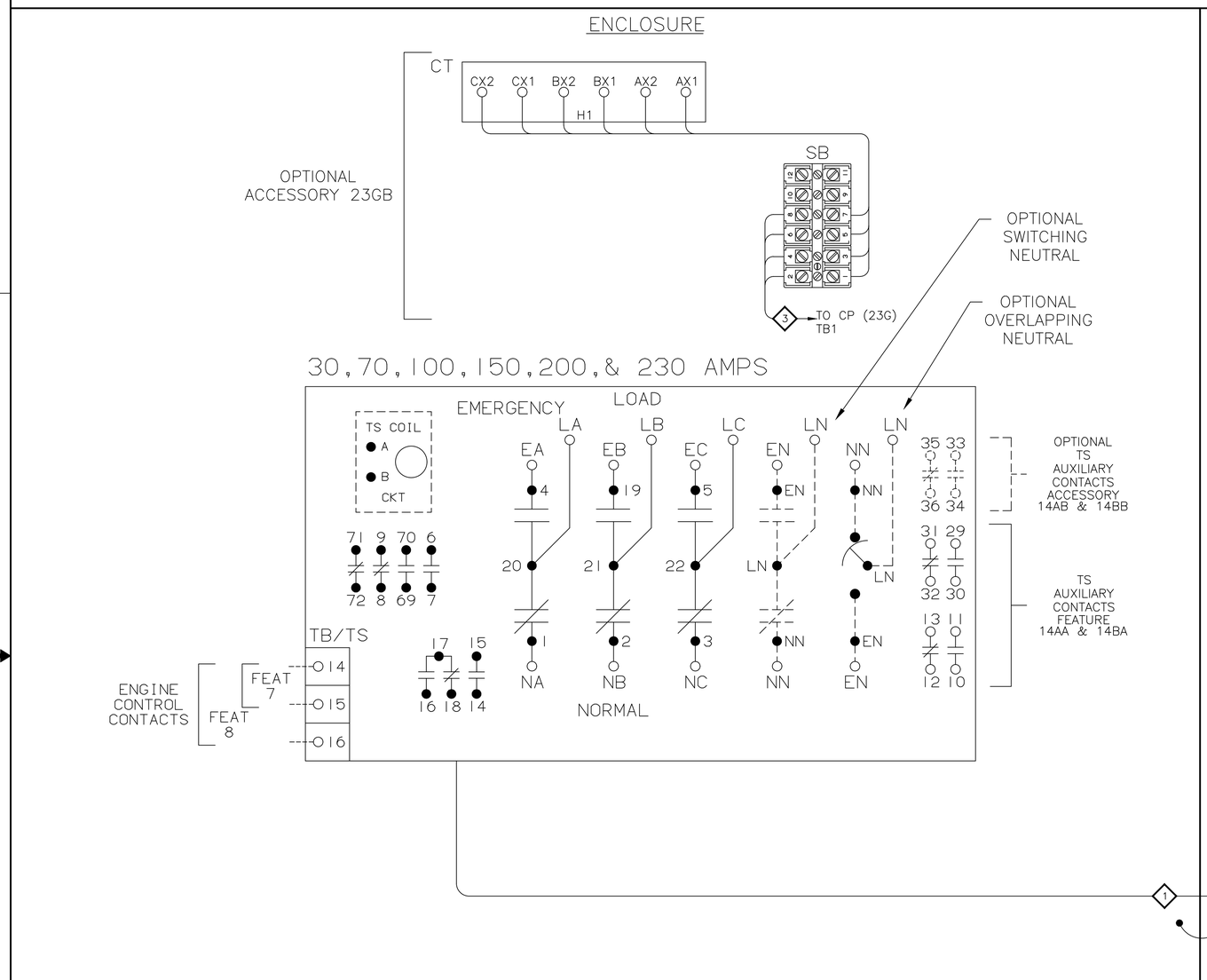

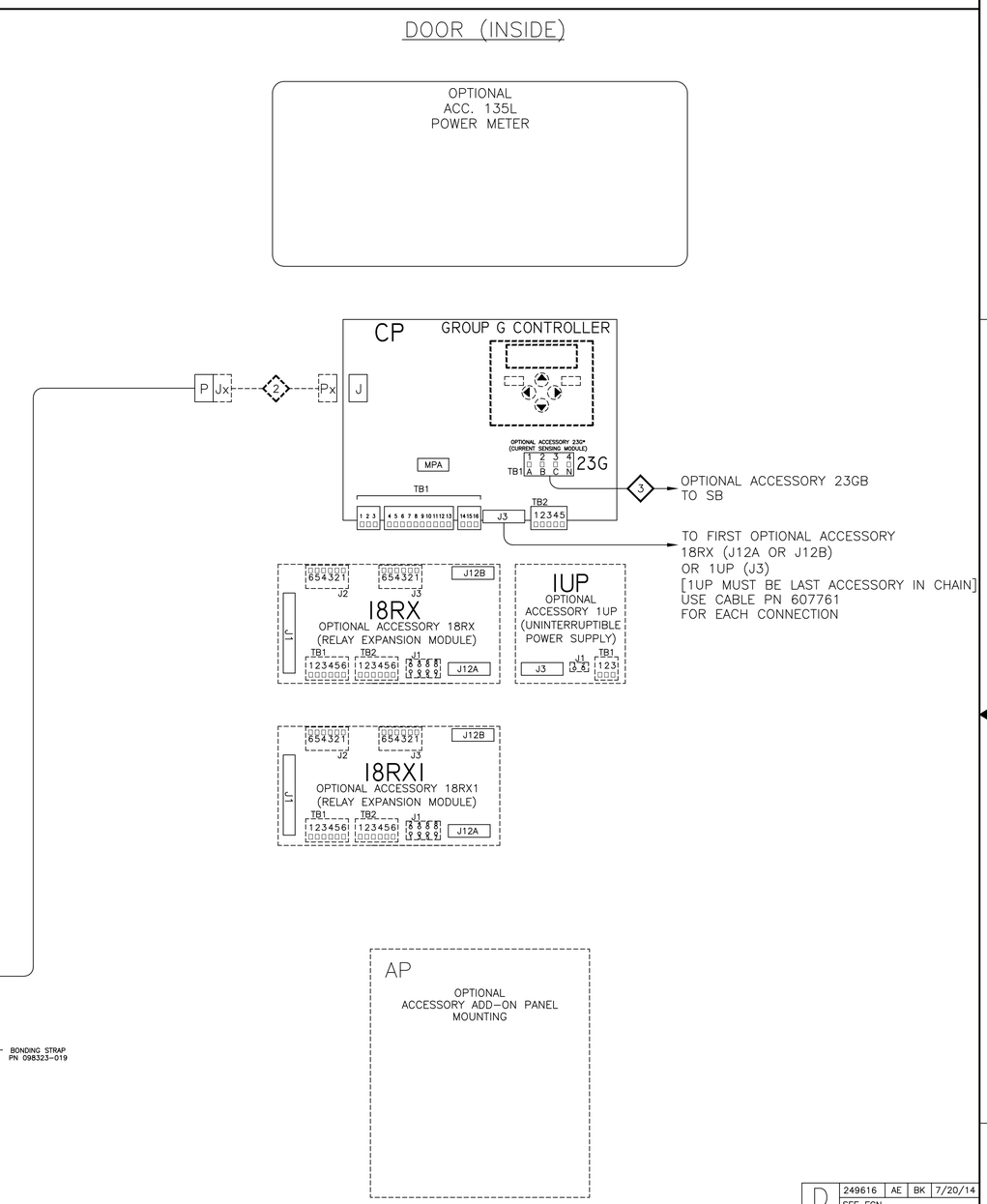

Project Name: Meramec Caverns
ASCO Catalog: D03ATSA30200NGXF,11BE,18RX,44G

REV. TO SHEET	ECN NO.	BY	APP.	DATE
D	249616	AE	BK	7/20/14
	SEE ECN			
C	247770	SDH	SDH	4/14/14
	SEE ECN			
B	246325	AE	BK	01/16/14
	SEE ECN			
A	242580	SDH	SDH	5/30/13
	SEE ECN			
—	242255	SDH	SDH	5/6/13
	ISSUE			

PROJECT NAME:

WIRING DIAGRAM

300 SERIES D3ATS/D3NTS THREE PHASE 30–230 AMPS
"D" FRAME, GROUP G CONTROLS

THIRD ANGLE PROJECTION

	BY	DATE
DRAWN BY	SDH	5/16/13
CHECKED		
PROJECT APPROVAL		
FINAL APPROVAL	SDH	5/16/13

MANUFACTURING TOLERANCES TO BE IN ACCORDANCE WITH ASCO PROCEDURE MP-I-003. FOR PLASTIC PARTS SEE MP-I-055

ASSEM. REF. NO.

PROPERTY OF ASCO POWER TECHNOLOGIES. USE PERMITTED FOR OUR WORK ONLY. ALL RIGHTS OF DESIGN OR INVENTION ARE RESERVED.

ASCO ASCO POWER TECHNOLOGIES, L.P.
FLORHAM PARK, NEW JERSEY 07932 U.S.A.

COMPUTER GENERATED DRAWING

SCALE NONE SIZE DS

DWG. NO. 978741

DRAWING REV. D ECN NO. 249616 SHEET 5 OF 6

WIRE RUN LISTING

1 ← HARNESS LOCATOR — BOX CHECKED IF HARNESS IS MODIFIED ☐

WIRE No.	HARNESS 337782-003 (P) MAIN TS	CLR	AWG
1	TS-8,P-1		20
2	TS-A,P-2		
3	TS-6,P-3		
4	TS-3,P-4		
5	TS-B,P-5		
6	TS-5,P-6		
7	TS-4,P-7		
8	TB/TS-14,P-8		
9	TB/TS-15,P-9		
10	TS-17,P-10		
11	TS-2,P-11		
12	TS-1,P-12		
13	TS-16,P-13		
14	TS-18,P-14		
15	TS-70,P-15		
16	TS-72,P-16		
17	TS-4,TS-9		
18	TS-7,TS-1		
20	TS-3,TS-69		
21	TS-5,TS-71		
8	TS-14,TB/TS-14		
9	TS-15,TB/TS-15		
24	TB/TS-16,P-17		
25	TS-19,P-18		
26	TS-20,P-19		
27	TS-21,P-20		
28	TS-22,P-21		
29	TS-NN,P-22		
30	TS-EN,P-23		
31	TS-LN,P-24		
	REMOVE WIRES		
	ADD WIRES		

2 ← HARNESS LOCATOR — BOX CHECKED IF HARNESS IS MODIFIED ☐

WIRE No.	HARNESS 309320-005 (Px,Jx) OPTIONAL 8" EXTENSION HARNESS	CLR	AWG
1	Px-1,Jx-1		16
2	Px-2,Jx-2		
3	Px-3,Jx-3		
4	Px-4,Jx-4		
5	Px-5,Jx-5		
6	Px-6,Jx-6		
7	Px-7,Jx-7		
8	Px-8,Jx-8		
9	Px-9,Jx-9		
10	Px-10,Jx-10		
11	Px-11,Jx-11		
12	Px-12,Jx-12		
13	Px-13,Jx-13		
14	Px-14,Jx-14		
15	Px-15,Jx-15		
16	Px-16,Jx-16		
24	Px-17,Jx-17		
25	Px-18,Jx-18		
26	Px-19,Jx-19		
27	Px-20,Jx-20		
28	Px-21,Jx-21		
29	Px-22,Jx-22		
30	Px-23,Jx-23		
31	Px-24,Jx-24		
	REMOVE WIRES		
	ADD WIRES		

3 ← HARNESS LOCATOR

WIRE No.	OPTIONAL ACCESSORY 23GB (CT,SB,CP(23G)-TB1)	CLR	AWG
300	CT-CX1,SB-1		16
301	CT-BX1,SB-3		
302	CT-AX1,SB-5		
300	SB-2,CP(23G)-TB1-1		
301	SB-4,CP(23G)-TB1-2		
302	SB-6,CP(23G)-TB1-3		
303	CT-AX2,CT-BX2	GRN	
303	CT-BX2,CT-CX2	GRN	
303	CT-CX2,SB-7	GRN	
303	SB-7,EQUIP-GND	GRN	
303	SB-8,CP(23G)-TB1-4	GRN	

WIRE No.	ADDITIONAL WIRES	CLR	AWG
			16

Project Name: Meramec Caverns
ASCO Catalog: D03ATSA30200NGXF,11BE,18RX,44G

D	249616	AE	BK	7/20/14
	SEE ECN			
C	247770	SDH	SDH	4/14/14
	SEE ECN			
B	246325	AE	BK	01/16/14
	SEE ECN			
A	242580	SDH	SDH	5/30/13
	SEE ECN			
—	242255	SDH	SDH	5/6/13
	ISSUE			

REV. TO SHEET | ECN NO. | BY | APP. | DATE

PROJECT NAME:

WIRING DIAGRAM

300 SERIES D3ATS/D3NTS, THREE PHASE 30-230 AMPS
"D" FRAME, GROUP G CONTROLS

THIRD ANGLE PROJECTION

	BY	DATE
DRAWN BY	SDH	5/6/13
CHECKED		
PROJECT APPROVAL		
FINAL APPROVAL	SDH	5/6/13

MANUFACTURING TOLERANCES TO BE IN ACCORDANCE WITH ASCO PROCEDURE MP-I-003. FOR PLASTIC PARTS SEE MP-I-055

ASSEM. REF. NO.

PROPERTY OF ASCO POWER TECHNOLOGIES. USE PERMITTED FOR OUR WORK ONLY. ALL RIGHTS OF DESIGN OR INVENTION ARE RESERVED.

ASCO® ASCO POWER TECHNOLOGIES, L.P. FLORHAM PARK, NEW JERSEY 07932 U.S.A.

COMPUTER GENERATED DRAWING

SCALE NONE | SIZE DS

DWG. NO. 978741

DRAWING REV. D | ECN NO. 249616 | SHEET 6 OF 6

cincinnati fan

OEM and Industrial Air Handling Specialist

HDBI
BLOWERS

BACKWARD INCLINED

CLASS II
CLASS III
CLASS IV

7697 Snider Road, Mason, OH 45040-9135

Telephone: 513-573-0600

Visit us at www.cincinnatifan.com for more information.

Cat. No. HDBI-0711

Supersedes HDBI-1006

cincinnati fan

A Company That Stands Behind Its Product

Since the founding of **Cincinnati Fan** in 1956, the company's mission has been to provide quality products at competitive prices, backed by dependable service.

This mission is carried out by specializing in the market for industrial air handling products up to 125 HP. But specialization does not mean the product line is small. **Cincinnati Fan** offers a wide variety of standard and customized products, production flexibility, and customer responsiveness.

Cincinnati Fan has over 170 experienced sales engineers across the U.S. and Canada ready to serve your air handling needs.

Cincinnati Fan can provide:

- Technical evaluation for correct performance conditions.
- Review of air stream and ambient conditions that require special attention.
- Selection of proper components to meet required design specifications.
- Selection of proper accessories.
- System analysis for proper fan design.

Cincinnati Fan operates in a modern facility specifically designed for world class manufacturing enabling us to build standard products to order, including accessories, and ship within 10 to 15 working days.

With support like this, you can be sure your **Cincinnati Fan** product will be well-built and will provide maximum dependability and longevity.

Visit us at www.cincinnatifan.com for more information.

HDBI FEATURES

A) Backward inclined blades are fabricated of heavy-gauge, high-strength steel to assure long lasting, efficient operation.
B) Turned, ground and polished shafting assures smooth operation. A rust preventive coating is applied prior to shipment.
C) Heavy-duty, self-aligning, relubricatable, ball bearings in cast-iron pillow blocks. Bearings are selected for optimal performance depending on fan size and class.
D) Bearing base is heavy steel construction with internal supports to maximize rigidity and assure long equipment life. Arrangement #1 fans can be converted to arrangement #9 with the addition of the motor slide base.
E) Inlet side support is used to assure a vibration-free, stable housing.
F) Slip collar inlet (not shown) is used for duct work connection. Flanged inlet optional.
G) Inlet bell is designed for smooth air entrance into the wheel inlet for maximum efficiency.
H) Reversible housing provides increased configuration flexibility. Removable side plates allow the wheel to be removed from the motor or inlet side of the housing. Housings are rotatable in 45 degree increments. Wheels are not reversible. See note at right.

Shown with optional discharge flange.

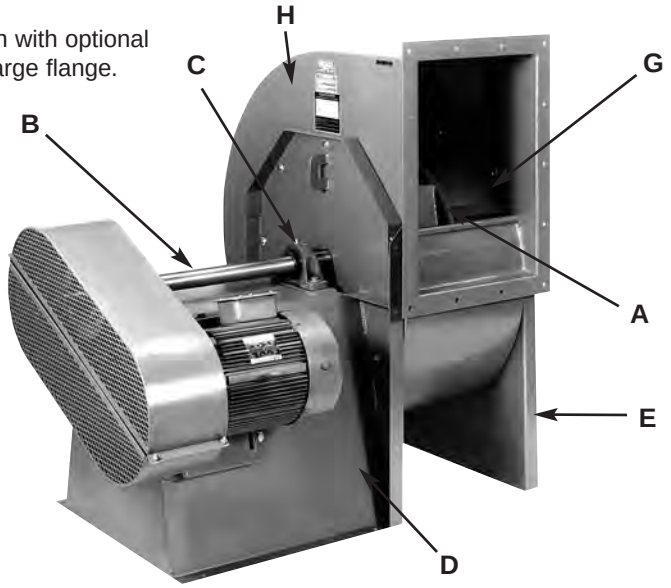

NOTE: HDBI-330 and HDBI-360 housings are not rotatable or reversible.

ADVANTAGES OF DIRECT DRIVE ARRANGEMENT #4 & #4HM

All sizes available with 2 wheel diameters in 100% to 50% widths in 5% increments

Shown with optional inlet and discharge flanges.

ADVANTAGES

- Compact - requires less space.
- Weighs Less - requires less supporting structure.
- Less Maintenance - no belts or fan bearings to replace.
- Less Expensive - above features result in lower first cost and lower maintenance cost.
- More Ratings - the combination of several motor speeds, two wheel diameters and eleven fan widths results in a vast selection of direct drive ratings.
- Temperature - good up to 200˚F. (93°C.)

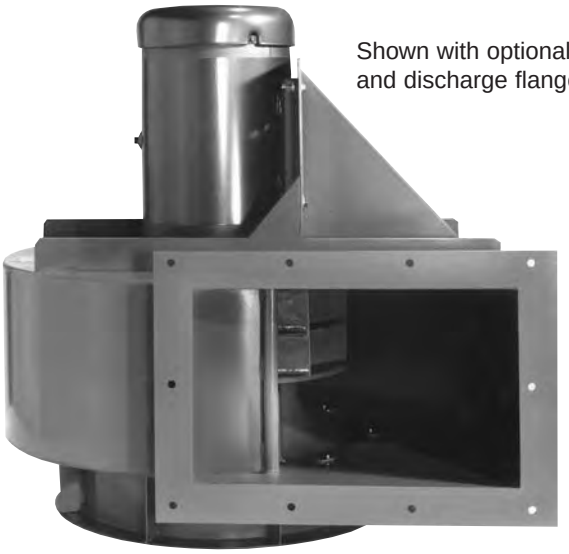

Shown with optional inlet and discharge flanges.

OPTIONAL ARRANGEMENT 4HM HORIZONTAL MOUNTING

Ideal for bag house or other equipment requiring the simplicity of a horizontally mounted fan. Motors are limited to frame 365T maximum.

This mounting is available on all sizes. All horizontal mount housings are non-reversible. Inlet flange is optional and must be added if required. Supporting equipment must be adequate to support weights shown on page 26 plus motor weight.

SIX STANDARD ARRANGEMENTS

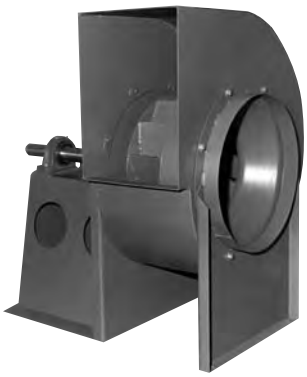

ARRANGEMENT 1 (V-BELT DRIVE)

- Motor not mounted on bearing base.
- Wheel mounted on fan shaft with two pillow block bearings.
- Maximum temperature of standard design: 300°F. (149°C.); high temperature designs up to 750°F. (398°C.)

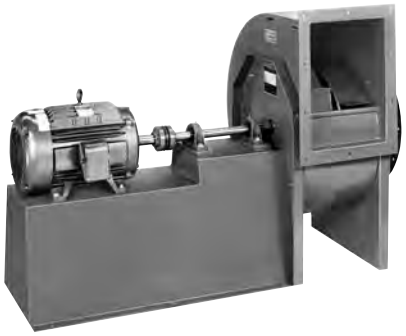

(Shown with shaft/coupling guard removed and optional discharge flange.)

ARRANGEMENT 8 (DIRECT DRIVE)

- Motor mounted on motor base extending beyond the bearing base. Shaft/coupling guard is standard.
- Wheel mounted on fan shaft with two pillow block bearings.
- Maximum temperature of standard design: 300°F. (149°C.); high temperature designs up to 750°F. (398°C.)

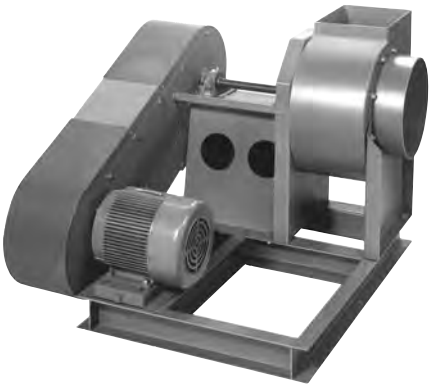

ARRANGEMENT 9CB (V-BELT DRIVE)

- Same as Arrangement 9 except motor and fan are mounted on a common channel base.
- Maximum temperature of standard design: 300°F. (149°C.); high temperature designs up to 750°F. (398°C.)

(Shown with optional discharge flange.)

ARRANGEMENT 4 (DIRECT DRIVE)

- Motor mounted on motor base.
- Wheel mounted on motor shaft.
- Maximum temperature of standard design: 200°F (93°C.); high temperature design not available.

(Shown with optional discharge flange.)

ARRANGEMENT 9 (V-BELT DRIVE)

- Motor mounted on an adjustable slide base on the side of the bearing base.
- Wheel mounted on fan shaft with two pillow block bearings.
- Maximum temperature of standard design: 300°F. (149°C.) high temperature designs up to 750°F. (398°C.)

(Shown with weather cover removed)

ARRANGEMENT 10 (V-BELT DRIVE)

- Motor mounted on adjustable base under the fan shaft.
- Wheel mounted on fan shaft with two pillow block bearings.
- Maximum temperature of standard design: 300°F. (149°C.); high temperature design not available.

OPTIONAL ACCESSORIES

Shaft Seal

Teflon shaft seal good to 400°F. (204°C.) Ceramic fiber gasket material with steel cover plate above 400°F. (205°C.)

Outlet Damper

All dampers are 1 or 2 blade. All dampers 10" deep flange to flange. Opposed blade construction is standard.

Belt Guard

Belt guard standard on Arrangement 9 and 9CB only. **Painted safety yellow.**

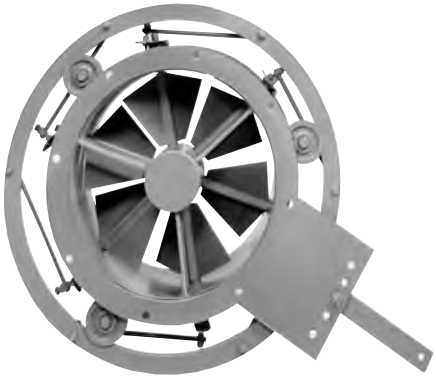

Inlet Vane Control

Linkage assembly is external on smaller sizes, internal on larger sizes. Inlet vane depth varies with inlet diameter. Contact your local Cincinnati Fan sales representative for dimensions.

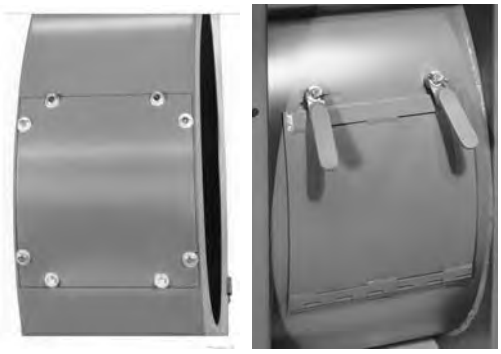

Inspection Door

Bolted or quick-release doors positioned as specified on scroll. Rubber gasket standard up to 250°F. (121°C.) Ceramic fiber gasket standard at temperatures above 250°F (122°C.).

Drain Connection

3/4" pipe coupling welded to lowest point of housing. Not required on BH discharge position.

Shaft and/or Heat Slinger Guard

Guard available on Arrangement 1, 9 and 9CB. Covers bearings and shaft between fan housing and belt guard. Has extended lube lines. Standard on high temperature fans above 301°F. (150°C). **Painted safety yellow.**

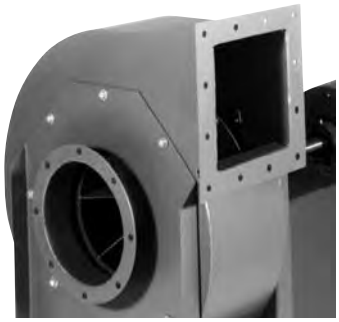

Inlet & Outlet Flanges

Flanges on inlet and outlet available where installation requires tight duct connections. Standard hole pattern furnished. Outlet flange not available on some discharge positions. Outlet flange standard on all sizes 270 through 360. See page 31 for dimensions.

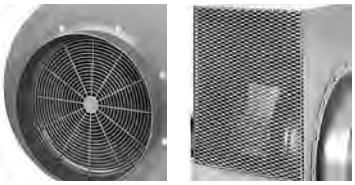

Inlet & Outlet Guards

Ring guard on inlet and expanded metal on discharge. Meet OSHA approval.

⚠ DANGER

All fans & blowers shown have rotating parts and pinch points. Severe personal injury can result if operated without guards. Stay away from rotating equipment unless it is disconnected from its power source.

Read operating instructions.

SPARK-RESISTANT CONSTRUCTION

Type A: All parts in contact with airstream are of nonferrous material. (***Contact your local Cincinnati Fan sales representative***).

Type B: Fabricated aluminum wheel and aluminum rubbing ring on motor shaft or fan shaft. **Maximum Temperature 200°F. (93°C.) all arrangements.**

Type C: Consists of aluminum inlet bell and aluminum plate on drive side of the fan. Maximum Temperature is the same as for high temperature construction below for each arrangement.

Maximum RPM for Aluminum Wheels*	
Size	Max. RPM
120	5400
130	4999
150	4712
160	4285
180	3885
200	3574
220	3550
240	2837
270	2476
300	2300
330	2300
360	1950

* Up to 200˚F. (93°C.) Consult your local Cincinnati Fan sales representative for higher temperatures and/or higher RPMs.

⚠ WARNING

The use of aluminum or aluminum alloys in the presence of steel which has been allowed to rust requires special consideration. Research by the U.S. Bureau of Mines and others has shown that aluminum impellers rubbing on rusty steel may cause high intensity sparking.

The use of the above Standard in no way implies a guarantee of safety for any level of spark resistance. Spark-resistant construction also does not protect against ignition of explosive gases caused by catastrophic failure or from any airstream material that may be present in a system.

HIGH TEMPERATURE CONSTRUCTION

Standard Construction: Arrangements 1, 8, 9, 9CB and 10 suitable to 300° F. (149° C.)
Arrangements 4 and 4HM suitable to 200° F. (93° C.)

201°- 400° F. (94° - 204° C.) Construction: Standard fan with heat slinger, slinger guard, teflon shaft seal and extended hub on wheel. Arrangements 4 and 4HM only.

301°- 400° F. (150° - 204° C.) Construction: Standard fan with heat slinger, fan shaft and slinger guard and teflon shaft seal. Arrangements 1, 8, 9 and 9CB.

401°- 600° F. (205° - 316° C.) Construction: Standard fan with heat slinger, fan shaft and slinger guard, high temp shaft seal, gaskets and paint. Arrangements 1, 8, 9 and 9CB.

601°- 750° F. (317° - 398° C.) Construction: Standard fan with high temp bearings, heat slinger, fan shaft and slinger guard, high temp shaft seal, gaskets and paint. Arrangements 1, 8, 9 and 9CB

TEMPERATURE RANGE	MAXIMUM RPM REDUCTION FACTOR†
Up to 175˚F.	0%
176˚-200˚	2%
201˚-300˚	4%
301˚-400˚	7%
401˚-500˚	11%
501˚-600˚	15%
601˚-700˚	20%
701˚-750˚	30%

† Steel wheels only.

TEMPERATURE - ALTITUDE CONVERSIONS

AIR TEMP. F°	AIR TEMP. C°	ALTITUDE IN FEET ABOVE SEA LEVEL										
		0	1000	2000	3000	4000	5000	6000	7000	8000	9000	10000
0°	-18°	.87	.91	.94	.98	1.01	1.05	1.09	1.13	1.17	1.22	1.26
40°	4°	.94	.98	1.02	1.06	1.10	1.14	1.19	1 23	1.28	1.32	1.36
70°	21°	1.00	1.04	1.08	1.12	1.16	1.20	1.25	1.30	1.35	1.40	1.45
80°	27°	1.02	1.06	1.10	1.14	1.19	1.23	1.28	1.33	1.38	1.43	1.48
100°	38°	1.06	1.10	1.14	1.19	1.23	1.28	1.33	1.38	1.43	1.48	1.54
120°	49°	1.09	1.14	1.18	1.23	1.28	1.32	1.38	1.43	1.48	1.53	1.58
140°	60°	1.13	1.18	1.22	1.27	1.32	1.37	1.42	1.48	1.54	1.58	1.65
160°	71°	1.17	1.22	1.26	1.31	1.36	1.42	1.47	1.53	1.59	1.64	1.70
180°	82°	1.21	1.26	1.30	1.36	1.41	1.46	1.52	1.58	1.64	1.70	1.75
200°	93°	1.25	1.29	1.34	1.40	1.45	1.51	1.57	1.63	1.69	1.75	1.81
250°	121°	1.34	1.39	1.45	1.50	1.56	1.62	1.68	1.74	1.82	1.88	1.94
300°	149°	1.43	1.49	1.55	1.61	1.67	1.74	1.80	1.87	1.94	2.00	2.08
350°	177°	1.53	1.59	1.65	1.72	1.78	1.85	1.92	2.00	2.07	2.14	2.22
400°	205°	1.62	1.69	1.75	1.82	1.89	1.96	2.04	2.12	2.20	2.27	2.35
450°	232°	1.72	1.79	1.86	1.93	2.00	2.08	2.16	2.24	2.33	2.41	2.50
500°	260°	1.81	1.88	1.96	2.03	2.11	2.19	2.28	2.36	2.46	2.54	2.62
550°	288°	1.91	1.98	2.06	2.14	2.22	2.30	2.40	2.49	2.58	2.68	2.77
600°	315°	2.00	2.08	2.16	2.24	2.33	2.42	2.50	2.61	2.71	2.80	2.90
650°	343°	2.10	2.18	2.26	2.35	2.44	2.54	2.63	2.74	2.84	2.94	3.04
700°	371°	2.19	2.27	2.36	2.46	2.55	2.65	2.75	2.86	2.97	3.06	3.18
750°	398°	2.28	2.37	2.47	2.56	2.66	2.76	2.87	2.98	3.10	3.19	3.31

Fan performance tables are developed using standard air which is 70°F., 29.92" barometric pressure and .075 lbs. per cubic foot. Density changes resulting from temperature or barometric pressure variations (such as higher altitudes) must be corrected to standard conditions before selecting a fan based on standard performance data. Temperature and/or altitude conversion factors are used in making corrections to standard conditions.

EXAMPLE:

Select a belt driven HDBI-300 to deliver 8327 CFM at .50" SP at 200°F. (93°C.), and 7000' altitude.
STEP 1. From the table, conversion factor is 1.63.
STEP 2. Correct static pressure is: 1.63 x .50" SP = .81" SP at standard conditions.
STEP 3. Check HDBI catalog for 8327 CFM at .81" SP. We select a belt driven HDBI-300 and interpolation gives 660 RPM and 1.83 BHP.
STEP 4. Correct the BHP for the lighter air: 1.83 ÷ 1.63 = 1.12 BHP. A 1.5 HP motor will suffice at 200°F., and 7000' but not at standard conditions. Special motor insulation may be required due to altitude.

DIRECT DRIVE RATING TABLES

CFM and BHP at Static Pressure Shown • Ratings at 70˚F., .075 Density, Sea Level

MODEL	RPM	0" SP CFM	0" SP BHP	1" SP CFM	1" SP BHP	2" SP CFM	2" SP BHP	3" SP CFM	3" SP BHP	4" SP CFM	4" SP BHP	5" SP CFM	5" SP BHP
HDBI-120	1150	1143 †	.09										
	1750	1740 †	.31	1316 †	.39								
	3500	3480 †	2.51	3282 †	2.67	3076 †	2.85	2861	3.00	2633	3.13	2379	3.20
HDBI-130	1150	1540 †	.16										
	1750	2344 †	.56	1828 †	.62	1086 †	.59						
	3500	4688	4.50	4457	4.68	4227	4.86	3946	4.93	3656	4.99	3353	5.01
HDBI-150	1150	2100 †	.23	1175 †	.28								
	1750	3195 †	.82	2700 †	.96	2070 †	1.00						
	3500	6385	6.59	6155	6.96	5930	7.28	5690	7.57	5405	7.71	5115	7.83
HDBI-160	1150	2795 †	.38	1875 †	.46								
	1750	4250 †	1.33	3730	1.53	3080	1.61	2170	1.55				
	3500	8500	10.62	8250	11.12	8000	11.55	7750	11.98	7460	12.26	7140	12.44
HDBI-180	1150	3780 †	.69	2800 †	.82								
	1750	5750	2.40	5195	2.68	4495	2.83	3685	2.87				
	3500	11500	17.58	11225	18.28	10945	18.86	10670	19.44	10395	20.02	10055	20.32
HDBI-200	1150	4975 †	.99	3935 †	1.17	2140 †	1.10						
	1750	7570	3.47	6960	3.88	6235	4.09	5435	4.23	4390	4.14		
	3500	15140	27.79	14830	28.74	14530	29.50	14225	30.27	13920	31.03	13620	31.80
HDBI-220	1150	6915	1.65	5955	1.99	4720	2.11						
	1750	10520	5.80	9900	6.41	9270	6.89	8610	7.26	7755	7.39	6820	7.42
HDBI-240	1150	9230	2.67	8185	3.15	6945	3.39	4880	3.26				
	1750	14045	9.39	13365	10.22	12680	10.92	11960	11.44	11185	11.85	10205	11.97
HDBI-270	1150	12885	4.68	11780	5.34	10550	5.79	9010	5.93				
	1750	19605	16.49	18885	17.62	18155	18.53	17405	19.37	16575	20.00	15745	20.63
HDBI-300	1150	17670	7.92	16450	8.85	15130	9.54	13630	9.98	11525	9.89		
	1750	26890	27.92	26095	29.54	25290	30.79	24480	32.04	23605	33.06	22680	33.92
HDBI-330	1150	23521	12.76	22173	13.95	20784	15.04	19242	15.79	17420	16.13	14835	15.81
	1750	35793	44.97	34907	46.77	34022	48.58	33136	50.38	32251	52.19	31254	53.42
HDBI-360	1150	30536	19.72	29067	21.26	27597	22.80	25940	23.84	24238	24.79	22104	24.96
	1750	46469	69.47	45503	71.82	44537	74.16	43571	76.51	42605	78.85	41629	81.13

MODEL	RPM	6" SP CFM	6" SP BHP	7" SP CFM	7" SP BHP	8" SP CFM	8" SP BHP	9" SP CFM	9" SP BHP	10" SP CFM	10" SP BHP	11" SP CFM	11" SP BHP
HDBI-120	3500	2073	3.18	1578	2.91								
HDBI-130	3500	2996	4.96	2595	4.85	2172	4.71						
HDBI-150	3500	4810	7.94	4510	8.06	4140	8.02	3700	7.87	3200	7.66		
HDBI-160	3500	6820	12.61	6490	12.76	6160	12.90	5825	13.04	5360	12.86	4870	12.64
HDBI-180	3500	9705	20.56	9350	20.80	8990	21.01	8620	21.20	8255	21.40	7885	21.59
HDBI-200	3500	13240	32.13	12850	32.44	12465	32.75	12075	33.04	11675	33.30	11270	33.56
HDBI-240	1750	9175	12.02										
HDBI-270	1750	14730	20.81	13625	20.87	11950	20.29						
HDBI-300	1750	21760	34.77	20685	35.19	19515	35.34	18025	35.05				
HDBI-330	1750	30240	54.56	29226	55.71	28133	56.57	26846	56.77	25560	56.98	23764	56.34
HDBI-360	1150	19092	24.39										
	1750	40522	82.61	39416	84.10	38309	85.58	37203	87.06	35851	87.53	34448	87.80

MODEL	RPM	12" SP CFM	12" SP BHP	13" SP CFM	13" SP BHP	14" SP CFM	14" SP BHP	15" SP CFM	15" SP BHP	16" SP CFM	16" SP BHP	17" SP CFM	17" SP BHP
HDBI-160	3500	4335	12.39										
HDBI-180	3500	7375	21.34	6865	21.08	6265	20.74						
HDBI-200	3500	10870	33.83	10465	34.09	9935	33.87	9375	33.54	8775	33.15	8130	32.70
HDBI-330	1750	21713	55.28										
HDBI-360	1750	33046	88.06	31056	87.17	28817	85.80						

Performance certified is for installation type B-Free inlet, Ducted Outlet.
Performance ratings do not include the effects of appurtenances (accessories).

† See pages 25 or 26 for minimum motor frame sizes regardless of BHP.

amca CERTIFIED RATINGS
AIR PERFORMANCE
AIR MOVEMENT AND CONTROL ASSOCIATION, INC.

Cincinnati Fan & Ventilator Company certifies that the HDBI Heavy Duty Backward Inclined Fans shown on this page and on pages 12 through 23 are licensed to bear the AMCA seal. The ratings shown are based on tests and procedures performed in accordance with AMCA Publication 211 and comply with the requirements of the AMCA Certified Ratings Program.

Fans are capable of operating to the maximum safe speeds shown on each performance table. These speeds permit obtaining the minimum SP/OV limits established as follows:

CLASS II - 8.5" SP at 3000 FPM to 4.25" SP at 4175 FPM.
CLASS III - 13.5" SP at 3780 FPM to 6.75" SP at 5260 FPM.
CLASS IV - 20" SP at 4600 FPM to 10" SP at 6400 FPM.

DIRECT DRIVE RATING TABLES
for partial width fans with two wheel types

The partial width fan ratings shown on this page and on Pages 9,10 and 11 were derived from tests performed in accordance with AMCA Publication 211 and fan laws were applied to arrive at the data shown for partial width fans. However, none of the partial width fans or fans with SQBI wheels are licensed to bear the AMCA seal. All 100% width fans with HDBI wheels are licensed to bear the AMCA seal as shown on pages 7 and 12 through 23.

MODEL NUMBER	RPM	WHEEL TYPE	FAN WIDTH	1" SP		2" SP		3" SP		4" SP		5" SP		6" SP	
				CFM	BHP	CFM	BHP	CFM	BHP	CFM	BHP	CFM	BHP	CFM	BHP
HDBI-120	1750	SQBI	1/2	813 †	.26	600 †	.26								
	1750	SQBI	3/4	1220 †	.39	900 †	.40								
	1750	HDBI	FULL	1316 †	.39										
	1750	SQBI	FULL	1627 †	.52	1201 †	.53								
	3500	HDBI	1/2	1641 †	1.34	1538 †	1.42	1430 †	1.50	1316 †	1.56	1190 †	1.60	1037 †	1.59
	3500	SQBI	1/2	1858 †	1.87	1789 †	1.96	1712 †	2.03	1627 †	2.08	1539 †	2.13	1437 †	2.14
	3500	HDBI	3/4	2462 †	2.00	2307 †	2.13	2146 †	2.25	1974 †	2.35	1785 †	2.40	1555 †	2.38
	3500	SQBI	3/4	2788 †	2.80	2683 †	2.93	2568	3.04	2441	3.12	2309	3.19	2155	3.21
	3500	HDBI	FULL	3282 †	2.67	3076 †	2.85	2861	3.00	2633	3.13	2379	3.20	2073	3.18
	3500	SQBI	FULL	3717	3.73	3578	3.91	3424	4.05	3255	4.16	3079	4.26	2874	4.28
HDBI-130	1750	SQBI	1/2	1127 †	.41	919 †	.44	799 †	.46						
	1750	SQBI	3/4	1690 †	.62	1378 †	.65	1199 †	.70						
	1750	HDBI	FULL	1828 †	.62	1086 †	.59								
	1750	SQBI	FULL	2254 †	.83	1838 †	.87	1599 †	.93						
	3500	HDBI	1/2	2278 †	2.27	2175 †	2.39	2065	2.46	1953 †	2.53	1820 †	2.56	1678 †	2.57
	3500	SQBI	1/2	2500	3.00	2423	3.12	2346	3.24	2254	3.31	2161	3.39	2065	3.45
	3500	HDBI	3/4	3416	3.41	3263	3.58	3098	3.69	2929	3.80	2730	3.84	2516	3.86
	3500	SQBI	3/4	3750	4.50	3635	4.68	3520	4.86	3381	4.97	3241	5.08	3097	5.18
	3500	HDBI	FULL	4457	4.68	4227	4.86	3946	4.93	3656	4.99	3353	5.01	2996	4.96
	3500	SQBI	FULL	5000	6.00	4846	6.24	4693	6.48	4508	6.63	4322	6.77	4130	6.90
HDBI-150	1750	SQBI	1/2	1535 †	.66	1321 †	.71	1040 †	.70						
	1750	SQBI	3/4	2303 †	1.00	1982 †	1.06	1560 †	1.05						
	1750	HDBI	FULL	2700 †	.96	2070 †	1.00								
	1750	SQBI	FULL	3071 †	1.33	2643 †	1.41	2080 †	1.41						
	3500	HDBI	1/2	3078	3.48	2965	3.64	2845	3.79	2703	3.86	2558	3.92	2405	3.97
	3500	SQBI	1/2	3355	4.82	3261	4.99	3166	5.15	3071	5.30	2967	5.40	2862	5.50
	3500	HDBI	3/4	4616	5.22	4448	5.46	4268	5.68	4054	5.78	3836	5.87	3608	5.96
	3500	SQBI	3/4	5033	7.24	4891	7.48	4750	7.72	4607	7.96	4451	8.11	4294	8.26
	3500	HDBI	FULL	6155	6.96	5930	7.28	5690	7.57	5405	7.71	5115	7.83	4810	7.94
	3500	SQBI	FULL	6710	9.65	6522	9.97	6333	10.30	6143	10.61	5934	10.81	5725	11.01
HDBI-160	1750	SQBI	1/2	2090 †	1.05	1873 †	1.13	1613 †	1.16	1183 †	1.08				
	1750	SQBI	3/4	3136	1.58	2809	1.69	2420	1.73	1775	1.61				
	1750	HDBI	FULL	3730	1.53	3080	1.61	2170	1.55						
	1750	SQBI	FULL	4181	2.11	3746	2.26	3227	2.31	2366	2.15				
	3500	HDBI	1/2	4125	5.56	4000	5.78	3875	5.99	3730	6.13	3570	6.22	3410	6.31
	3500	SQBI	1/2	4495	7.79	4390	8.03	4285	8.24	4181	8.44	4076	8.62	3969	8.77
	3500	HDBI	3/4	6188	8.34	6000	8.66	5813	8.99	5595	9.20	5355	9.33	5115	9.46
	3500	SQBI	3/4	6742	11.68	6584	12.04	6428	12.37	6271	12.66	6113	12.92	5953	13.16
	3500	HDBI	FULL	8250	11.12	8000	11.55	7750	11.98	7460	12.26	7140	12.44	6820	12.61
	3500	SQBI	FULL	8990	15.58	8779	16.06	8571	16.49	8362	16.88	8151	17.23	7937	17.54
HDBI-180	1750	SQBI	1/2	2871	1.71	2637	1.82	2378	1.89	2057	1.90	1489	1.73		
	1750	HDBI	3/4	3896	1.88	3371	1.97	2764	2.00						
	1750	SQBI	3/4	4307	2.56	3955	2.73	3567	2.84	3086	2.85	2233	2.59		
	1750	HDBI	FULL	5195	2.68	4495	2.83	3685	2.87						
	1750	SQBI	FULL	5743	3.42	5273	3.65	4756	3.78	4114	3.80	2978	3.45		
	3500	HDBI	1/2	5613	9.14	5473	9.43	5335	9.72	5198	10.01	5028	10.16	4853	10.28
	3500	SQBI	1/2	6091	12.76	5974	13.09	5858	13.39	5743	13.67	5627	13.93	5511	14.17
	3500	HDBI	3/4	8419	13.71	8209	14.15	8003	14.58	7796	15.02	7541	15.24	7279	15.42
	3500	SQBI	3/4	91.36	19.14	8961	19.63	8787	20.09	8614	20.51	8441	20.90	8267	21.25
	3500	HDBI	FULL	11225	18.28	10945	18.86	10670	19.44	10395	20.02	10055	20.32	9705	20.56
	3500	SQBI	FULL	12181	25.52	11947	26.18	11716	26.79	11486	27.35	11255	27.87	11022	28.34
HDBI-200	1750	SQBI	1/2	3934	2.85	3658	3.02	3371	3.16	3045	3.18	2612	3.09	1722	2.51
	1750	HDBI	3/4	5220	2.91	4676	3.07	4076	3.17	3293	3.11				
	1750	SQBI	3/4	5901	4.27	5487	4.53	5057	4.74	4568	4.77	3918	4.63	2583	3.77
	1750	HDBI	FULL	6960	3.88	6235	4.09	5435	4.23	4390	4.14				
	1750	SQBI	FULL	7868	5.69	7317	6.05	6743	6.33	6091	6.36	5224	6.18	3444	5.03
	3500	HDBI	1/2	7415	14.37	7265	14.75	7113	15.14	6960	15.52	6810	15.90	6620	16.07
	3500	SQBI	1/2	8268	21.53	8135	21.94	8001	22.35	7867	22.76	7734	23.17	7600	23.58
	3500	HDBI	3/4	11123	21.56	10898	22.13	10669	22.70	10440	23.27	10215	23.85	9930	24.10
	3500	SQBI	3/4	12403	32.29	12202	32.91	12002	33.52	11801	34.14	11601	34.76	11401	35.37
	3500	HDBI	FULL	14830	28.74	14530	29.50	14225	30.27	13920	31.03	13620	31.80	13240	32.13
	3500	SQBI	FULL	16537	43.05	16270	43.88	16003	44.70	15735	45.52	15468	46.34	15201	47.16

Performance shown is for installation type B-Free inlet,ducted outlet. Performance ratings do not include the effects of appurtenances (accessories).

CFM and BHP at Static Pressure Shown
Ratings at 70°F., .075 Density, Sea Level

7" SP		8" SP		9" SP		10" SP		11" SP		12" SP		13" SP		14" SP	
CFM	BHP	CFM	BHP	CFM	BHP	CFM	BHP	CFM	BHP	CFM	BHP	CFM	BHP	CFM	BHP
1330 †	2.15	1201 †	2.11	1021	1.95										
1996	3.22	1801	3.16	1532	2.93										
1578 †	2.91														
2661	4.29	2402	4.21	2043	3.90										
1951	3.47	1838	3.48	1705	3.45	1559	3.39	1347	3.14						
2927	5.20	2758	5.22	2558	5.18	2339	5.08	2021	4.71						
2595	4.85	2172	4.71												
3903	6.93	3677	6.97	3411	6.91	3119	6.78	2695	6.28						
2255	4.03	2070	4.01												
2758	5.60	2643	5.66	2527	5.71	2406	5.74	2244	5.68	2081	5.62	1817	5.35	1086	4.39
3383	6.05	3105	6.02												
4137	8.41	3965	8.48	3791	8.56	3610	8.61	3367	8.52	3121	8.43	2725	8.02	1629	6.58
4510	8.06	4140	8.02	3700	7.87	3200	7.66								
5516	11.21	5287	11.31	5055	11.41	4813	11.49	4489	11.37	4162	11.24	3634	10.69	2173	8.77
3245	6.38	3080	6.45	2913	6.52	2680	6.43								
3859	8.91	3746	9.03	3628	9.12	3503	9.20	3370	9.24	3227	9.25	3067	9.22	2885	9.14
4868	9.57	4620	9.68	4369	9.78	4020	9.65								
5788	13.36	5618	13.54	5441	13.68	5255	13.79	5056	13.86	4840	13.88	4601	13.83	4327	13.70
6490	12.76	6160	12.90	5825	13.04	5360	12.86	4870	12.64	4335	12.39				
7718	17.82	7491	18.05	7255	18.25	7006	18.39	6741	18.48	6453	18.51	6134	18.45	5769	18.27
4675	10.40	4495	10.51	4310	10.60	4128	10.70	3943	10.80						
5393	14.39	5273	14.59	5150	14.75	5024	14.90	4893	15.03	4756	15.13	4612	15.20	4459	15.24
7013	15.60	6743	15.76	6465	15.90	6191	16.05	5914	16.19						
8090	21.58	7910	21.87	7726	22.13	7536	22.36	7339	22.55	7134	22.70	6918	22.80	6689	22.86
9350	20.80	8990	21.01	8620	21.20	8255	21.40	7885	21.59	7375	21.34	6865	21.08	6265	20.74
10786	28.77	10547	29.16	10301	29.51	10048	29.81	9786	30.06	9512	30.26	9224	30.40	8918	30.48
6425	16.22	6323	16.38	6038	16.52	5838	16.65	5635	16.78	5425	16.92	5233	17.05	4968	16.94
7458	23.88	7317	24.18	7175	24.48	7033	24.78	6891	25.08	6743	25.30	6580	25.34	6417	25.38
9638	24.33	9349	24.56	9056	24.78	8756	24.98	8453	25.17	8153	25.37	7849	25.57	7451	25.40
11188	35.82	10975	36.27	10762	36.72	10550	37.17	10337	37.62	10115	37.95	9870	38.01	9626	38.07
12850	32.44	12465	32.75	12075	33.04	11675	33.30	11270	33.56	10870	33.83	10465	34.09	9935	33.87
14917	47.76	14364	48.36	14350	48.96	14066	49.56	13783	50.16	13487	50.60	13160	50.68	12834	50.76

† Requires a 143T frame or larger even though BHP is available in a 56 frame. See pages 25 or 26.

See additional HDBI-160 ratings at bottom of page 10.

See additional HDBI-180 ratings at bottom of page 10.

See additional HDBI-200 ratings at bottom of pages 10 & 11.

DIRECT DRIVE RATING TABLES (cont'd)

The partial width fan ratings shown on this page and on Pages 8, 9 and 11 were derived from tests performed in accordance with AMCA Publication 211 and fan laws were applied to arrive at the data shown for partial width fans. However, none of the partial width fans or fans with SQBI wheels are licensed to bear the AMCA seal. All 100% width fans with HDBI wheels are licensed to bear the AMCA seal as shown on pages 7 and 12 through 23.

MODEL NUMBER	RPM	WHEEL TYPE	FAN WIDTH	1" SP		2" SP		3" SP		4" SP		5" SP		6" SP	
				CFM	BHP	CFM	BHP	CFM	BHP	CFM	BHP	CFM	BHP	CFM	BHP
HDBI-220	1750	HDBI	1/2	4950	3.21	4635	3.45	4305	3.63	3878	3.70				
	1750	SQBI	1/2	5375	4.43	5104	4.69	4777	4.83	4443	4.97	4092	5.07	3655	5.08
	1750	HDBI	3/4	7425	4.81	6953	5.17	6548	5.45	5816	5.54				
	1750	SQBI	3/4	8063	6.65	7656	7.03	7166	7.25	6664	7.45	6138	7.60	5483	7.62
	1750	HDBI	FULL	9900	6.41	9270	6.89	8610	7.26	7755	7.39	6820	7.42		
	1750	SQBI	FULL	10750	8.87	10209	9.37	9555	9.67	8886	9.93	8184	10.13	7311	10.16
	3500	HDBI	1/2	10364	23.77	10209	24.34	10054	24.91	9899	25.48	9744	26.05	9589	26.62
	3500	HDBI	3/4	15547	35.66	15314	36.51	15081	37.37	14849	38.22	14616	39.08	14383	39.94
	3500	HDBI	FULL	20729	47.54	20419	48.68	20109	49.82	19799	50.97	19488	52.11	19178	53.25
HDBI-240	1750	HDBI	1/2	6683	5.11	6340	5.46	5980	5.72	5593	5.93	5103	5.99		
	1750	SQBI	1/2	7250	7.12	6955	7.47	6618	7.72	6258	7.92	5884	8.08	5497	8.21
	1750	HDBI	3/4	10024	7.67	9510	8.19	8970	8.58	8389	8.89	7654	8.98		
	1750	SQBI	3/4	10875	10.68	10433	11.20	9928	11.58	9388	11.87	8826	12.12	8246	12.32
	1750	HDBI	FULL	13365	10.22	12680	10.92	11960	11.44	11185	11.85	10205	11.97	9175	12.02
	1750	SQBI	FULL	14500	14.25	13911	14.93	13237	15.43	12517	15.83	11769	16.16	10995	16.43
HDBI-270	1750	HDBI	1/2	9443	8.81	9078	9.27	8703	9.69	8288	10.00	7873	10.32	7365	10.42
	1750	SQBI	1/2	9764	11.46	9440	11.92	9106	12.36	8709	12.62	8312	12.89	7898	13.10
	1750	HDBI	3/4	14161	13.22	13616	13.90	13054	14.53	12431	15.00	11803	15.47	11048	15.61
	1750	SQBI	3/4	14647	17.20	14161	17.89	13659	18.53	13064	18.93	12469	19.33	11848	19.65
	1750	HDBI	FULL	18885	17.62	18155	18.53	17405	19.37	16575	20.00	15745	20.63	14730	20.81
	1750	SQBI	FULL	19529	22.93	18881	23.85	18212	24.71	17418	25.24	16625	25.78	15797	26.21
HDBI-300	1750	HDBI	1/2	13048	14.77	12645	15.40	12240	16.02	11803	16.53	11340	16.96	10880	17.39
	1750	SQBI	1/2	13496	19.30	13136	19.94	12775	20.57	12377	21.08	11936	21.44	11495	21.81
	1750	HDBI	3/4	19571	22.16	18968	23.09	18360	24.03	17704	24.80	17010	25.44	16320	26.08
	1750	SQBI	3/4	20244	28.96	19704	29.91	19163	30.86	18565	31.61	17904	32.16	17242	32.71
	1750	HDBI	FULL	26095	29.54	25290	30.79	24480	32.04	23605	33.06	22680	33.92	21760	34.77
	1750	SQBI	FULL	26992	38.61	26272	39.87	25551	41.14	24754	42.15	23872	42.88	22990	43.61
HDBI-330	1750	HDBI	1/2	17453	23.38	17011	24.28	16568	25.19	16125	26.09	15627	26.71	15120	27.28
	1750	SQBI	1/2	19051	34.49	18555	35.13	18059	35.77	17538	36.25	16985	36.53	16432	36.81
	1750	HDBI	3/4	26180	35.07	25516	36.43	24852	37.78	24188	39.14	23441	40.07	22680	40.92
	1750	SQBI	3/4	28576	51.73	27832	52.69	27088	53.65	26307	54.38	25478	54.79	24648	55.21
	1750	HDBI	FULL	34907	46.77	34022	48.58	33136	50.38	32251	52.19	31254	53.42	30240	54.56
	1750	SQBI	FULL	38102	68.98	37110	70.26	36118	71.54	35076	72.50	33970	73.06	32864	73.62
HDBI-360	1750	HDBI	1/2	22751	35.91	22268	37.08	21785	38.25	21302	39.43	20814	40.57	20261	41.31
	1750	SQBI	1/2	25982	57.19	25433	58.06	24884	58.93	24336	59.79	23747	60.35	23134	60.73
	1750	HDBI	3/4	34127	53.86	33402	55.62	32678	57.38	31954	59.13	31221	60.85	30391	61.96
	1750	SQBI	3/4	38973	85.79	38150	87.09	37327	88.39	36504	89.69	35620	90.53	34702	91.10
	1750	HDBI	FULL	45503	71.82	44537	74.16	43571	76.51	42605	78.85	41629	81.13	40522	82.61

MODEL NUMBER	RPM	WHEEL TYPE	FAN WIDTH	15" SP		16" SP		17" SP		18" SP		19" SP		20" SP	
				CFM	BHP	CFM	BHP	CFM	BHP	CFM	BHP	CFM	BHP	CFM	BHP
HDBI-160	3500	SQBI	1/2	2664	8.96	2366	8.61								
	3500	SQBI	3/4	3996	13.44	3549	12.92								
	3500	SQBI	FULL	5328	17.92	4732	17.22								
HDBI-180	3500	SQBI	1/2	4295	15.24	4114	15.18								
	3500	SQBI	3/4	6442	22.86	6171	22.78								
	3500	SQBI	FULL	8589	30.47	8229	30.37								
HDBI-200	3500	SQBI	1/2	6254	25.42	6091	25.46	5922	25.47	5690	25.21	5457	24.96	5224	24.70
	3500	SQBI	3/4	9381	38.13	9137	38.18	8884	38.20	8535	37.82	8185	37.44	7836	37.06
	3500	SQBI	FULL	12508	50.83	12182	50.91	11845	50.94	11380	50.43	10914	49.92	10449	49.41
HDBI-220	3500	HDBI	1/2	7975	29.46	7753	29.55	7531	29.64	7309	29.73	7066	29.72	6822	29.70
	3500	HDBI	3/4	11963	44.19	11630	44.33	11297	44.46	10964	44.59	10600	44.58	10233	44.54
	3500	HDBI	FULL	15951	58.93	15507	59.10	15063	59.28	14619	59.46	14133	59.43	13644	59.39
HDBI-330	1750	SQBI	1/2	8235	31.96										
	1750	SQBI	3/4	12352	47.95										
	1750	SQBI	FULL	16470	63.93										
HDBI-360	1750	SQBI	1/2	16331	60.33	15064	59.99	13619	59.67	11878	55.24				
	1750	SQBI	3/4	24497	90.49	22597	89.99	20429	89.50	17817	82.87				

Performance shown is for installation type B-Free inlet,ducted outlet. Performance ratings do not include the effects of appurtenances (accessories).

CFM and BHP at Static Pressure Shown
Ratings at 70°F., .075 Density, Sea Level

7" SP		8" SP		9" SP		10" SP		11" SP		12" SP		13" SP		14" SP	
CFM	BHP	CFM	BHP	CFM	BHP	CFM	BHP	CFM	BHP	CFM	BHP	CFM	BHP	CFM	BHP
3061	4.96														
4591	7.43														
6122	9.91														
9434	27.19	9269	27.56	9105	27.93	8940	28.31	8776	28.68	8611	29.05	8420	29.29	8198	29.37
14151	40.79	13904	41.35	13657	41.90	13411	42.46	13164	43.02	12917	43.57	12630	43.93	12297	44.06
18868	54.39	18539	55.13	18210	55.87	17881	56.61	17552	57.35	17223	58.10	16840	58.57	16396	58.75
5045	8.27	4464	8.17	3641	7.81										
7567	12.40	6696	12.25	5462	11.71										
10090	16.53	8929	16.34	7283	15.61										
7472	13.28	7046	13.46	6437	13.37	5731	13.16	4756	12.55						
11208	19.92	10569	20.19	9655	20.05	8597	19.74	7134	18.83						
13625	20.87	11950	20.29												
14945	26.56	14092	26.92	12874	26.73	11463	26.32	9512	25.10						
10343	17.60														
11044	22.13	10570	22.38	10097	22.62	9607	22.84	8923	22.70	8198	22.50	7281	22.03	5851	20.43
15514	26.39														
16566	33.20	15856	33.57	15145	33.93	14411	34.26	13385	34.05	12297	33.75	10922	33.05	8776	30.65
20685	35.19	19515	35.34	18025	35.05										
22089	44.27	21141	44.76	20194	45.25	19215	45.68	17847	45.39	16396	45.00	14562	44.06	11702	40.86
14613	27.85	14066	28.28	13423	28.38	12780	28.48	11882	28.16	10856	27.64				
15875	37.07	15208	37.00	14542	36.92	13866	36.83	13046	36.57	12225	36.32	11166	36.07	9860	35.83
21920	41.77	21100	42.42	20135	42.58	19170	42.73	17823	42.25	16285	41.45				
23812	55.61	22812	55.50	21813	55.38	20799	55.24	19569	54.86	18338	54.47	16749	54.10	14791	53.74
29226	55.71	28133	56.57	26846	56.77	25560	56.98	23764	56.34	21713	55.28				
31750	74.15	30417	73.99	29084	73.84	27732	73.66	26092	73.15	24451	72.63	22332	72.14	19721	71.66
19708	42.05	19154	42.78	18601	43.53	17925	43.76	17224	43.89	16523	44.03	15528	43.58	14408	42.89
22522	61.11	21909	61.49	21239	61.65	20501	61.54	19763	61.43	19025	61.33	18148	61.02	17240	60.68
29562	63.07	28732	64.18	27902	65.29	26888	65.64	25836	65.84	24784	66.04	23292	65.37	21613	64.37
33783	91.67	32864	92.24	31858	92.47	30752	92.31	29645	92.15	28538	91.99	27223	91.54	25860	91.01
39416	84.10	38309	85.58	37203	87.06	35851	87.53	34448	87.80	33046	88.06	31056	87.17	28817	85.80

See additional HDBI-220 ratings at bottom of page 10 and this page.

See additional HDBI-330 and HDBI-360 ratings at bottom of page 10.

21" SP		22" SP		23" SP		24" SP		25" SP		26" SP		27" SP		28" SP	
CFM	BHP	CFM	BHP	CFM	BHP	CFM	BHP	CFM	BHP	CFM	BHP	CFM	BHP	CFM	BHP
4950	24.32	4616	23.74	4282	23.16	3444	20.10	2845	17.59						
7426	36.48	6924	35.60	6423	34.73	5166	30.15	4267	26.39						
9901	48.63	9233	47.47	8564	46.31	6888	40.20	5690	35.18						
6577	29.68	6072	29.04	5522	28.29										
9865	44.51	9108	43.56	8283	42.44										
13154	59.35	12144	58.07	11044	56.58										

HDBI-120

Belt Drive Rating Tables

Ratings at 70°F., .075 Density, Sea Level

WHEEL
Dia. - 12.25"

OUTLET O.D.
Size - 9.375" x 13.75"
Area - .895 Sq. Ft.

INLET O.D.
Size - 13.25"
Area - .92 Sq. Ft.

All wheels are HDBI Type
Class II = light face above Class III
Class III = bold face

SEE PAGE 24 FOR MAX. WHEEL RPM AND WR².

VOLUME	O.V.	0" SP		¼" SP		½" SP		¾" SP		1" SP		1½" SP		2" SP	
CFM	FPM	RPM	BHP	RPM	BHP	RPM	BHP	RPM	BHP	RPM	BHP	RPM	BHP	RPM	BHP
600	670	603	0.01	831	0.04	1011	0.08	1173	0.12	1324	0.16	1598	0.26		
750	838	753	0.02	948	0.06	1105	0.10	1247	0.14	1380	0.19	1625	0.29	1852	0.41
900	1005	904	0.04	1073	0.09	1214	0.13	1341	0.18	1460	0.23	1681	0.34	1887	0.47
1050	1173	1055	0.07	1204	0.12	1332	0.17	1447	0.22	1556	0.28	1757	0.40	1946	0.53
1200	1341	1205	0.10	1339	0.16	1456	0.21	1562	0.28	1662	0.34	1848	0.47	2022	0.61
1350	1508	1356	0.15	1477	0.21	1584	0.27	1683	0.34	1776	0.41	1949	0.55	2112	0.70
1500	1676	1507	0.20	1617	0.27	1716	0.34	1809	0.41	1896	0.49	2058	0.64	2210	0.81
1650	1843	1657	0.27	1758	0.34	1851	0.42	1938	0.50	2019	0.58	2173	0.75	2316	0.92
1800	2011	1808	0.35	1901	0.42	1988	0.51	2069	0.59	2146	0.68	2292	0.86	2428	1.05
1950	2178	1959	0.44	2045	0.52	2126	0.61	2203	0.71	2276	0.80	2414	0.99	2544	1.19
2100	2346	2109	0.55	2190	0.64	2266	0.73	2339	0.83	2408	0.93	2540	1.14	2664	1.35
2250	2513	2260	0.67	2336	0.77	2408	0.87	2476	0.98	2542	1.08	2668	1.30	2786	1.53
2400	2681	2411	0.82	2482	0.92	2550	1.03	2615	1.14	2678	1.25	2798	1.48	2912	1.72
2550	2849	2561	0.98	2629	1.09	2693	1.21	2755	1.32	2815	1.44	2930	1.68	3039	1.93
2700	3016	2712	1.17	2776	1.28	2837	1.40	2896	1.52	2954	1.65	3064	1.90	3169	2.17
2850	3184	2863	1.37	2923	1.49	2981	1.62	3038	1.75	3093	1.88	3199	2.15	3300	2.42
3000	3351	3013	1.60	3071	1.73	3126	1.86	3181	1.99	3233	2.13	3335	2.41	3433	2.70
3150	3519	3164	1.85	3219	1.99	3272	2.12	3324	2.26	3375	2.41	3473	2.70	3567	3.00
3300	3686	3315	2.13	3367	2.27	3418	2.41	3468	2.56	3517	2.71	3611	3.01	3702	3.32
3450	3854	3465	2.43	3515	2.58	3564	2.73	3612	2.88	3659	3.04	3750	3.35	3838	3.68
3600	4022	3616	2.76	3664	2.92	3711	3.07	3757	3.23	3802	3.39	3890	3.72	3976	4.06
3750	4189	3767	3.12	3813	3.28	3858	3.45	3903	3.61	3946	3.78	4031	4.12	4114	4.47
3900	4357	3917	3.51	3962	3.68	4005	3.85	4048	4.02	4090	4.19	4173	4.55	**4253**	**4.90**

VOLUME	O.V.	2½" SP		3" SP		4" SP		5" SP		6" SP		7" SP		8" SP	
CFM	FPM	RPM	BHP	RPM	BHP	RPM	BHP	RPM	BHP	RPM	BHP	RPM	BHP	RPM	BHP
1050	1173	2125	0.68	2296	0.83	2617	1.16	2915	1.52						
1200	1341	2188	0.76	2347	0.92	2648	1.26	2930	1.64	3196	2.04	3448	2.48		
1350	1508	2266	0.86	2414	1.03	2696	1.39	2962	1.77	3216	2.19	3457	2.63	3688	3.10
1500	1676	2355	0.98	2494	1.15	2759	1.53	3011	1.93	3251	2.36	3481	2.81	3703	3.29
1650	1843	2453	1.10	2584	1.29	2834	1.68	3072	2.10	3300	2.54	3520	3.01	3732	3.50
1800	2011	2557	1.24	2682	1.44	2919	1.85	3145	2.29	3362	2.75	3572	3.23	3774	3.74
1950	2178	2667	1.40	2786	1.61	3012	2.04	3227	2.50	3434	2.98	3634	3.47	3828	3.99
2100	2346	2782	1.57	2895	1.79	3111	2.25	3317	2.72	3515	3.22	3706	3.74	3892	4.27
2250	2513	2899	1.76	3008	1.99	3216	2.47	3413	2.97	3603	3.49	3786	4.02	3965	4.58
2400	2681	3020	1.96	3125	2.21	3324	2.71	3514	3.23	3697	3.77	3873	4.33	4045	4.90
2550	2849	3144	2.19	3244	2.44	3437	2.97	3620	3.52	3796	4.08	3966	4.66	4131	5.25
2700	3016	3269	2.43	3367	2.70	3552	3.26	3729	3.83	3899	4.41	4063	5.01	**4223**	**5.63**
2850	3184	3397	2.70	3491	2.98	3671	3.56	3842	4.15	4006	4.76	4165	5.39	**4320**	**6.02**
3000	3351	3527	2.99	3617	3.28	3791	3.89	3957	4.51	4116	5.14	**4271**	**5.78**	**4421**	**6.44**
3150	3519	3657	3.30	3745	3.61	3914	4.24	4075	4.88	**4230**	**5.54**	**4379**	**6.21**	**4525**	**6.89**
3300	3686	3790	3.64	3875	3.96	4039	4.61	**4195**	**5.28**	**4345**	**5.96**	**4491**	**6.66**	**4632**	**7.36**
3450	3854	3923	4.01	4006	4.34	4165	5.02	**4317**	**5.71**	**4463**	**6.42**	**4605**	**7.13**	**4743**	**7.86**
3600	4022	4058	4.40	4138	4.74	**4293**	**5.45**	**4441**	**6.16**	**4583**	**6.89**	**4721**	**7.64**	**4856**	**8.39**
3750	4189	**4194**	**4.82**	**4272**	**5.18**	**4422**	**5.91**	**4566**	**6.65**	**4705**	**7.40**	**4840**	**8.17**	**4971**	**8.95**
3900	4357	**4330**	**5.27**	**4406**	**5.64**	**4552**	**6.39**	**4693**	**7.16**	**4828**	**7.94**	**4960**	**8.73**		
4050	4524	**4468**	**5.75**	**4542**	**6.14**	**4684**	**6.91**	**4821**	**7.71**	**4953**	**8.51**				
4200	4692	**4606**	**6.27**	**4678**	**6.66**	**4817**	**7.46**	**4950**	**8.28**						

VOLUME	O.V.	9" SP		10" SP		11" SP		12" SP		13" SP		14" SP	
CFM	FPM	RPM	BHP	RPM	BHP	RPM	BHP	RPM	BHP	RPM	BHP	RPM	BHP
1800	2011	3971	4.26	4163	4.81	**4349**	**5.38**	**4530**	**5.97**	**4707**	**6.59**	**4880**	**7.22**
1950	2178	4017	4.54	**4201**	**5.10**	**4380**	**5.68**	**4555**	**6.28**	**4727**	**6.90**	**4894**	**7.54**
2100	2346	4073	4.83	**4250**	**5.41**	**4423**	**6.00**	**4591**	**6.62**	**4757**	**7.25**	**4919**	**7.90**
2250	2513	4139	5.15	**4308**	**5.74**	**4475**	**6.35**	**4638**	**6.98**	**4798**	**7.62**	**4954**	**8.29**
2400	2681	**4212**	**5.49**	**4376**	**6.10**	**4536**	**6.73**	**4693**	**7.37**	**4848**	**8.03**		
2550	2849	**4292**	**5.86**	**4450**	**6.49**	**4605**	**7.13**	**4757**	**7.79**	**4906**	**8.46**		
2700	3016	**4379**	**6.25**	**4531**	**6.90**	**4681**	**7.56**	**4828**	**8.24**	**4972**	**8.93**		
2850	3184	**4471**	**6.67**	**4618**	**7.34**	**4763**	**8.02**	**4905**	**8.71**				
3000	3351	**4567**	**7.12**	**4710**	**7.80**	**4850**	**8.50**						
3150	3519	**4667**	**7.58**	**4806**	**8.29**	**4942**	**9.01**						
3300	3686	**4770**	**8.08**	**4906**	**8.81**								
3450	3854	**4877**	**8.60**										

Performance certified is for installation type B - Free inlet, Ducted Outlet. Performance ratings do not include the effects of appurtenances (accessories).

Power rating (BHP) does not include transmission losses.

HDBI-130

BELT DRIVE RATING TABLES

Ratings at 70˚F., .075 Density, Sea Level

WHEEL
Dia. - 13.50"

OUTLET O.D.
Size - 10.38" x 15.19"
Area - 1.05 Sq. Ft. I.D.

INLET O.D.
Size - 14.63"
Area - 1.14 Sq.Ft. I.D.

SEE PAGE 24 FOR MAX. WHEEL RPM & WR².

All wheels are HDBI type
Class II = light face above Class III
Class III = bold face
Class IV = italic face below Class III

VOLUME CFM	O.V. FPM	0" SP RPM	0" SP BHP	1/4" SP RPM	1/4" SP BHP	1/2" SP RPM	1/2" SP BHP	3/4" SP RPM	3/4" SP BHP	1" SP RPM	1" SP BHP	1 1/2" SP RPM	1 1/2" SP BHP	2" SP RPM	2" SP BHP	2 1/2" SP RPM	2 1/2" SP BHP
900	857	672	.03	867	.08	1027	.13	1167	.18	1290	.24	1500	.37	1706	.51	1892	.67
1100	1047	821	.06	986	.11	1129	.17	1257	.23	1372	.30	1579	.44	1756	.60	1921	.76
1300	1238	971	.10	1111	.16	1242	.22	1356	.29	1465	.37	1661	.52	1835	.69	1990	.87
1500	1428	1120	.15	1241	.22	1361	.29	1468	.37	1565	.45	1751	.62	1918	.81	2071	1.00
1700	1619	1269	.21	1378	.29	1484	.37	1583	.46	1677	.55	1847	.73	2007	.93	2153	1.14
1900	1809	1419	.30	1518	.39	1611	.48	1705	.57	1792	.67	1952	.87	2102	1.08	2243	1.30
2100	2000	1568	.40	1658	.50	1741	.60	1829	.70	1911	.81	2064	1.02	2202	1.25	2339	1.49
2300	2190	1717	.53	1801	.64	1877	.74	1956	.85	2034	.97	2179	1.20	2313	1.44	2436	1.69
2500	2380	1866	.68	1944	.79	2016	.91	2084	1.03	2159	1.15	2297	1.40	2426	1.66	2546	1.93
2700	2571	2016	.86	2088	.98	2155	1.10	2219	1.23	2286	1.36	2419	1.63	2541	1.91	2658	2.19
2900	2761	2165	1.06	2232	1.20	2296	1.33	2356	1.46	2415	1.60	2543	1.89	2660	2.18	2772	2.48
3100	2952	2314	1.30	2378	1.44	2438	1.58	2495	1.72	2550	1.87	2669	2.17	2782	2.48	2889	2.80
3300	3142	2464	1.57	2523	1.72	2580	1.87	2635	2.02	2687	2.17	2796	2.49	2906	2.82	3009	3.15
3500	3333	2613	1.87	2669	2.03	2723	2.19	2775	2.35	2826	2.51	2925	2.84	3031	3.19	3132	3.54
3700	3523	2762	2.21	2816	2.38	2867	2.54	2917	2.71	2965	2.89	3057	3.23	2158	3.59	3255	3.96
3900	3714	2912	2.59	2962	2.76	3012	2.94	3059	3.12	3105	3.30	3194	3.66	3286	4.04	3381	4.42
4100	3904	3061	3.01	3109	3.19	3156	3.38	3202	3.56	3246	3.75	3332	4.13	3415	4.52	3507	4.92
4300	4095	3210	3.47	3257	3.66	3301	3.86	3345	4.05	3388	4.25	3470	4.65	3549	5.05	3635	5.47
4500	4285	3360	3.98	3404	4.18	3447	4.38	3489	4.59	3530	4.79	3609	5.21	3686	5.63	3764	6.06
4700	4476	3509	4.53	3551	4.74	3593	4.95	3633	5.17	3673	5.38	3749	5.82	3823	6.25	**3895**	**6.69**

VOLUME CFM	O.V. FPM	3" SP RPM	3" SP BHP	4" SP RPM	4" SP BHP	5" SP RPM	5" SP BHP	6" SP RPM	6" SP BHP	7" SP RPM	7" SP BHP	8" SP RPM	8" SP BHP	9" SP RPM	9" SP BHP	10" SP RPM	10" SP BHP
1500	1428	2211	1.20	2461	1.63	2708	2.10	2946	2.60	3165	3.12	3368	3.65	3560	4.21	3741	4.79
1700	1619	2292	1.36	2540	1.82	2760	2.31	2975	2.83	3193	3.38	3397	3.95	3588	4.54	3769	5.15
1900	1809	2375	1.54	2620	2.03	2839	2.54	3039	3.08	3223	3.65	3426	4.25	3617	4.88	3798	5.52
2100	2000	2466	1.73	2703	2.25	2920	2.80	3118	3.37	3301	3.96	3472	4.58	3646	5.22	3827	5.90
2300	2190	2562	1.95	2789	2.50	3002	3.08	3198	3.68	3380	4.30	3550	4.95	3711	5.61	**3863**	**6.29**
2500	2380	2659	2.20	2883	2.78	3086	3.38	3281	4.01	3461	4.67	3630	5.34	3790	6.03	**3941**	**6.75**
2700	2571	2767	2.48	2979	3.08	3178	3.71	3364	4.37	3543	5.06	3711	5.76	**3870**	**6.49**	**4021**	**7.23**
2900	2761	2879	2.78	3077	3.41	3274	4.07	3454	4.76	3627	5.47	3793	6.21	**3951**	**6.96**	**4101**	**7.74**
3100	2952	2993	3.12	3186	3.78	3370	4.46	3549	5.18	3716	5.92	**3877**	**6.68**	**4034**	**7.47**	**4183**	**8.27**
3300	3142	3108	3.49	3297	4.18	3471	4.89	3645	5.64	3811	6.41	**3966**	**7.20**	**4117**	**8.01**	**4265**	**8.84**
3500	3333	3227	3.89	3410	4.62	3581	5.36	3743	6.13	**3906**	**6.93**	**4060**	**7.75**	**4207**	**8.59**	**4349**	**9.44**
3700	3523	3348	4.33	3525	5.09	3692	5.87	**3849**	**6.66**	**4004**	**7.49**	**4156**	**8.34**	**4301**	**9.21**	**4439**	**10.09**
3900	3714	3471	4.81	3641	5.60	3806	6.42	**3959**	**7.24**	**4104**	**8.08**	**4253**	**8.97**	**4396**	**9.87**	**4533**	**10.79**
4100	3904	3595	5.33	3761	6.16	**3920**	**7.00**	**4071**	**7.86**	**4214**	**8.74**	**4351**	**9.63**	**4493**	**10.57**	**4629**	**11.52**
4300	4095	3721	5.89	**3883**	**6.76**	**4036**	**7.63**	**4185**	**8.53**	**4325**	**9.44**	**4459**	**10.36**	**4591**	**11.31**	**4726**	**12.29**
4500	4285	**3847**	**6.50**	**4006**	**7.40**	**4155**	**8.31**	**4299**	**9.24**	**4438**	**10.18**	**4570**	**11.14**	**4696**	**12.11**	*4823*	*13.11*
4700	4476	**3975**	**7.15**	**4130**	**8.09**	**4276**	**9.03**	**4415**	**9.99**	**4552**	**10.97**	**4682**	**11.96**	*4806*	*12.96*	*4926*	*13.98*
4900	4666	**4104**	**7.86**	**4255**	**8.82**	**4398**	**9.80**	**4534**	**10.80**	**1667**	**11.81**	*4795*	*12.83*	*4918*	*13.87*		
5100	4857	**4234**	**8.61**	**4382**	**9.61**	**4522**	**10.63**	**4654**	**11.66**	*4783*	*12.70*	*4909*	*13.76*				

VOLUME CFM	O.V. FPM	11" SP RPM	11" SP BHP	12" SP RPM	12" SP BHP	13" SP RPM	13" SP BHP	14" SP RPM	14" SP BHP	15" SP RPM	15" SP BHP	16" SP RPM	16" SP BHP	17" SP RPM	17" SP BHP
1900	1809	**3970**	**6.18**	**4134**	**6.85**	**4292**	**7.54**	**4444**	**8.25**	**4590**	**8.97**	**4732**	**9.70**		
2100	2000	**3999**	**6.59**	**4163**	**7.30**	**4320**	**8.02**	**4472**	**8.76**	**4619**	**9.51**	**4760**	**10.28**	*4898*	*11.06*
2300	2190	**4027**	**7.01**	**4192**	**7.75**	**4349**	**8.51**	**4501**	**9.28**	**4647**	**10.06**	**4789**	**10.86**	*4926*	*11.67*
2500	2380	**4086**	**7.47**	**4224**	**8.22**	**4378**	**9.00**	**4530**	**9.81**	**4676**	**10.63**	*4818*	*11.46*	*4955*	*12.30*
2700	2571	**4164**	**7.99**	**4302**	**8.76**	**4435**	**9.55**	**4563**	**10.36**	**4705**	**11.20**	*4847*	*12.07*	*4984*	*12.95*
2900	2761	**4244**	**8.53**	**4381**	**9.33**	**4513**	**10.15**	**4641**	**10.99**	*4764*	*11.84*	*4883*	*12.70*		
3100	2952	**4325**	**9.09**	**4461**	**9.93**	**4593**	**10.78**	**4719**	**11.65**	*4842*	*12.53*	*4961*	*13.42*		
3300	3142	**4407**	**9.70**	**4543**	**10.56**	**4673**	**11.44**	*4799*	*12.34*	*4921*	*13.25*				
3500	3333	**4490**	**10.33**	**4625**	**11.23**	*4755*	*12.14*	*4880*	*13.07*						
3700	3523	**4574**	**11.00**	**4708**	**11.93**	*4837*	*12.87*	*4962*	*13.83*						
3900	3714	**4665**	**11.72**	*4792*	*12.66*	*4921*	*13.64*								
4100	3904	*4759*	*12.48*	*4885*	*13.46*										

Performance certified is for installation type B - Free inlet, Ducted Outlet. Performance ratings do not include the effects of appurtenances (accessories). Power rating (BHP) does not include transmission losses.

HDBI-150

BELT DRIVE RATING TABLES

Ratings at 70˚F., .075 Density, Sea Level

WHEEL
Dia. - 15.00"

OUTLET O.D.
Size - 11.38" x 16.75"
Area - 1.28 Sq. Ft. I.D.

INLET O.D.
Size - 16.13"
Area - 1.39 Sq.Ft. I.D.

All wheels are HDBI type
Class II = light face above Class III
Class III = bold face
Class IV = italic face below Class III

SEE PAGE 24 FOR MAX. WHEEL RPM & WR².

VOLUME CFM	O.V. FPM	0" SP RPM	0" SP BHP	1/4" SP RPM	1/4" SP BHP	1/2" SP RPM	1/2" SP BHP	3/4" SP RPM	3/4" SP BHP	1" SP RPM	1" SP BHP	1 1/2" SP RPM	1 1/2" SP BHP	2" SP RPM	2" SP BHP	2 1/2" SP RPM	2 1/2" SP BHP
1750	1367	959	.14	1062	.21	1165	.29	1258	.37	1341	.45	1502	.63	1651	.83	1789	1.04
2000	1562	1096	.20	1188	.29	1278	.37	1364	.46	1444	.56	1585	.75	1728	.96	1858	1.18
2250	1757	1233	.29	1316	.38	1394	.48	1475	.58	1550	.68	1686	.89	1809	1.12	1936	1.35
2500	1953	1370	.40	1446	.50	1514	.61	1589	.72	1659	83	1789	1.06	1907	1.30	2017	1.55
2750	2148	1507	.53	1576	.64	1640	.76	1705	.88	1772	1.00	1895	1.25	2009	1.50	2114	1.77
3000	2343	1644	.68	1708	.81	1768	.93	1824	1.07	1887	1.20	2005	1.46	2114	1.74	2216	2.02
3250	2539	1781	.87	1840	1.00	1896	1.14	1949	1.28	2003	1.42	2117	1.71	2221	2.00	2320	2.30
3500	2734	1918	1.09	1973	1.23	2026	1.38	2076	1.53	2124	1.68	2230	1.98	2331	2.30	2425	2.61
3750	2929	2055	1.33	2107	1.49	2156	1.65	2204	1.81	2249	1.97	2346	2.29	2443	2.62	2534	2.96
4000	3125	2192	1.62	2241	1.78	2288	1.95	2333	2.12	2376	2.29	2463	2.64	2557	2.99	2645	3.35
4250	3320	2329	1.94	2375	2.12	2419	2.29	2462	2.47	2504	2.66	2583	3.02	2672	3.39	2757	3.77
4500	3515	2466	2.31	2510	2.49	2552	2.68	2593	2.87	2632	3.06	2708	3.45	2788	3.84	2871	4.23
4750	3710	2603	2.71	2644	2.91	2685	3.10	2724	3.30	2761	3.50	2834	3.91	2906	4.33	2986	4.74
5000	3906	2740	3.16	2779	3.37	2818	3.58	2855	3.79	2891	4.00	2962	4.42	3029	4.86	3103	5.29
5250	4101	2877	3.66	2915	3.88	2951	4.09	2987	4.31	3022	4.53	3089	4.98	3154	5.44	3220	5.89
5500	4296	3014	4.21	3050	4.44	3085	4.66	3119	4.89	3153	5.12	3218	5.59	3281	6.06	3341	6.54
5750	4492	3151	4.81	3185	5.05	3219	5.28	3252	5.52	3284	5.76	3347	6.25	3408	6.74	3466	7.24
6000	4687	3288	5.47	3321	5.71	3353	5.96	3385	6.21	3416	6.46	3477	6.97	**3535**	**7.48**	**3592**	**8.00**
6250	4882	3425	6.18	3457	6.43	3488	6.69	**3518**	**6.95**	**3548**	**7.21**	**3607**	**7.74**	**3664**	**8.27**	**3719**	**8.81**
6500	5078	**3562**	**6.95**	**3593**	**7.21**	**3623**	**7.48**	**3652**	**7.75**	**3681**	**8.02**	**3738**	**8.57**	**3793**	**9.12**	**3846**	**9.68**

VOLUME CFM	O.V. FPM	3" SP RPM	3" SP BHP	4" SP RPM	4" SP BHP	5" SP RPM	5" SP BHP	6" SP RPM	6" SP BHP	7" SP RPM	7" SP BHP	8" SP RPM	8" SP BHP	9" SP RPM	9" SP BHP	10" SP RPM	10" SP BHP
1750	1367	1917	1.26	2175	1.77	2403	2.33										
2000	1562	1982	1.42	2210	1.92	2438	2.51	2644	3.14								
2250	1757	2053	1.60	2273	2.13	2473	2.70	2679	3.35	2868	4.04	3045	4.76				
2500	1953	2132	1.81	2342	2.36	2536	2.96	2714	3.58	2903	4.30	3079	5.05	3245	5.83	3402	6.63
2750	2148	2213	2.05	2418	2.63	2606	3.25	2782	3.90	2944	4.58	3115	5.34	3280	6.15	3437	6.99
3000	2343	2310	2.31	2499	2.93	2680	3.57	2851	4.25	3013	4.96	3164	5.70	3315	6.49	3472	7.36
3250	2539	2412	2.61	2582	3.25	2760	3.93	2924	4.63	3083	5.37	3233	6.14	3374	6.93	3509	7.75
3500	2734	2516	2.94	2682	3.62	2841	4.32	3004	5.06	3155	5.81	3303	6.61	3443	7.44	**3577**	**8.28**
3750	2929	2621	3.31	2784	4.02	2934	4.75	3085	5.52	3235	6.31	3376	7.12	**3514**	**7.97**	**3647**	**8.85**
4000	3125	2728	3.71	2888	4.45	3034	5.22	3171	6.01	3315	6.84	3455	7.69	**3588**	**8.55**	**3717**	**9.45**
4250	3320	2838	4.15	2993	4.93	3136	5.73	3270	6.56	3397	7.41	**3536**	**8.29**	**3667**	**9.19**	**3792**	**10.11**
4500	3515	2950	4.63	3099	5.45	3240	6.29	3372	7.15	3496	8.03	**3618**	**8.93**	**3748**	**9.87**	**3872**	**10.83**
4750	3710	3063	5.16	3208	6.01	3345	6.89	3475	7.78	**3597**	**8.70**	**3713**	**9.63**	**3829**	**10.59**	**3953**	**11.58**
5000	3906	3177	5.73	3319	6.62	3452	7.53	3579	8.46	**3699**	**9.41**	**3814**	**10.38**	**3923**	**11.37**	**4034**	**12.38**
5250	4101	3293	6.35	3431	7.28	**3560**	**8.22**	**3684**	**9.19**	**3803**	**10.18**	**3916**	**11.18**	**4024**	**12.21**	**4127**	**13.24**
5500	4296	3409	7.02	**3544**	**7.99**	**3670**	**8.97**	**3791**	**9.97**	**3907**	**10.99**	**4018**	**12.04**	**4125**	**13.09**	**4228**	**14.17**
5750	4492	**3527**	**7.74**	**3658**	**8.75**	**3782**	**9.77**	**3899**	**10.80**	**4013**	**11.86**	**4123**	**12.94**	**4228**	**14.03**	**4329**	**15.14**
6000	4687	**3648**	**8.52**	**3774**	**9.56**	**3894**	**10.62**	**4009**	**11.69**	**4120**	**12.79**	**4228**	**13.90**	**4331**	**15.03**	*4431*	*16.18*
6250	4882	**3773**	**9.35**	**3890**	**10.44**	**4008**	**11.53**	**4121**	**12.65**	**4229**	**13.77**	**4334**	**14.92**	*4436*	*16.09*	*4535*	*17.27*
6500	5078	**3899**	**10.24**	**4007**	**11.37**	**4123**	**12.51**	**4233**	**13.66**	**4339**	**14.82**	*4441*	*16.00*	*4542*	*17.20*	*4639*	*18.42*

VOLUME CFM	O.V. FPM	11" SP RPM	11" SP BHP	12" SP RPM	12" SP BHP	13" SP RPM	13" SP BHP	14" SP RPM	14" SP BHP	15" SP RPM	15" SP BHP	16" SP RPM	16" SP BHP	17" SP RPM	17" SP BHP	18" SP RPM	18" SP BHP
3000	2343	**3621**	**8.25**	**3763**	**9.17**	**3899**	**10.11**	**4031**	**11.07**								
3250	2539	**3656**	**8.66**	**3798**	**9.61**	**3934**	**10.58**	**4066**	**11.57**	**4192**	**12.58**	**4315**	**13.62**	*4434*	*14.68*		
3500	2734	**3705**	**9.15**	**3833**	**10.06**	**3970**	**11.06**	**4101**	**12.08**	**4227**	**13.13**	**4350**	**14.19**	*4469*	*15.28*	*4584*	*16.39*
3750	2929	**3774**	**9.75**	**3896**	**10.67**	**4013**	**11.60**	**4136**	**12.61**	**4263**	**13.69**	*4385*	*14.78*	*4504*	*15.90*	*4619*	*17.04*
4000	3125	**3843**	**10.39**	**3965**	**11.34**	**4081**	**12.30**	**4194**	**13.29**	**4303**	**14.29**	*4420*	*15.39*	*4539*	*16.53*	*4654*	*17.70*
4250	3320	**3914**	**11.05**	**4035**	**12.04**	**4151**	**13.04**	**4263**	**14.06**	*4371*	*15.10*	*4476*	*16.15*	*4579*	*17.21*	*4690*	*18.38*
4500	3515	**3991**	**11.80**	**4105**	**12.78**	**4221**	**13.82**	**4332**	**14.87**	*4440*	*15.94*	*4545*	*17.02*	*4647*	*18.12*		
4750	3710	**4071**	**12.59**	**4184**	**13.61**	**4294**	**14.64**	*4403*	*15.72*	*4510*	*16.82*	*4615*	*17.94*				
5000	3906	**4151**	**13.43**	**4264**	**14.48**	*4373*	*15.55*	*4478*	*16.64*	*4581*	*17.74*	*4685*	*18.89*				
5250	4101	**4233**	**14.31**	**4345**	**15.40**	*4453*	*16.51*	*4558*	*17.63*	*4659*	*18.76*						
5500	4296	**4326**	**15.25**	*4427*	*16.37*	*4534*	*17.51*	*4638*	*18.67*								
5750	4492	*4426*	*16.27*	*4521*	*17.40*	*4616*	*18.56*										
6000	4684	*4528*	*17.33*	*4621*	*18.51*	*4712*	*19.70*										

Performance certified is for installation type B - Free inlet, Ducted Outlet. Performance ratings do not include the effects of appurtenances (accessories). Power rating (BHP) does not include transmission losses.

HDBI-160

BELT DRIVE RATING TABLES

Ratings at 70˚F., .075 Density, Sea Level

WHEEL
Dia. - 16.50"

OUTLET O.D.
Size - 12.50" x 18.38"
Area - 1.54 Sq. Ft. I.D.

INLET O.D.
Size - 18.00"
Area - 1.73 Sq.Ft. I.D.

All wheels are HDBI type
Class II = light face above Class III
Class III = bold face
Class IV = italic face below Class III

SEE PAGE 24 FOR MAX. WHEEL RPM & WR².

VOLUME CFM	O.V. FPM	0" SP RPM	0" SP BHP	1/2" SP RPM	1/2" SP BHP	1" SP RPM	1" SP BHP	1 1/2" SP RPM	1 1/2" SP BHP	2" SP RPM	2" SP BHP	2 1/2" SP RPM	2 1/2" SP BHP	3" SP RPM	3" SP BHP	4" SP RPM	4" SP BHP
2100	1363	865	.16	1054	.34	1214	.54	1361	.76	1498	.99	1622	1.24	1740	1.51	1975	2.14
2400	1558	988	.24	1155	.44	1306	.66	1435	.90	1566	1.15	1685	1.42	1798	1.70	2007	2.31
2700	1753	1112	.34	1259	.57	1401	.81	1526	1.07	1639	1.34	1755	1.62	1861	1.92	2061	2.55
3000	1948	1235	.47	1367	.72	1500	.99	1619	1.26	1726	1.55	1828	1.85	1932	2.17	2124	2.83
3300	2142	1359	.62	1481	.90	1601	1.19	1714	1.49	1818	1.80	1913	2.12	2005	2.45	2192	3.15
3600	2337	1482	.81	1596	1.11	1705	1.42	1812	1.74	1912	2.07	2005	2.41	2091	2.77	2264	3.50
3900	2532	1606	1.03	1711	1.35	1810	1.69	1913	2.03	2008	2.38	2098	2.75	2183	3.12	2338	3.89
4200	2727	1729	1.28	1828	1.63	1918	1.99	2016	2.36	2107	2.73	2194	3.12	2276	3.51	2428	4.32
4500	2922	1853	1.58	1946	1.95	2031	2.34	2120	2.73	2208	3.12	2291	3.53	2371	3.94	2519	4.80
4800	3116	1976	1.91	2064	2.31	2145	2.72	2225	3.14	2310	3.56	2391	3.98	2467	4.42	2613	5.32
5100	3311	2100	2.29	2183	2.72	2260	3.15	2332	3.59	2414	4.04	2492	4.49	2566	4.94	2707	5.88
5400	3506	2223	2.72	2302	3.17	2376	3.63	2445	4.09	2519	4.56	2595	5.03	2667	5.51	2803	6.49
5700	3701	2347	3.20	2422	3.67	2492	4.15	2559	4.64	2625	5.14	2698	5.64	2768	6.14	2900	7.16
6000	3896	2471	3.73	2542	4.23	2609	4.73	2673	5.25	2735	5.77	2803	6.29	2871	6.81	3000	7.88
6300	4090	2594	4.32	2662	4.84	2727	5.37	2788	5.91	2848	6.45	2909	7.00	2975	7.55	3101	8.66
6600	4285	2718	4.97	2783	5.51	2845	6.07	2904	6.63	2962	7.19	3017	7.77	3080	8.34	**3203**	**9.50**
6900	4480	2841	5.68	2903	6.25	2963	6.82	3021	7.41	3076	8.00	3130	8.60	3186	9.20	**3306**	**10.40**
7200	4675	2965	6.45	3024	7.04	3082	7.64	3137	8.25	3191	8.87	**3243**	**9.19**	**3294**	**10.12**	**3410**	**11.37**
7500	4870	3088	7.29	3146	7.91	**3201**	**8.53**	**3255**	**9.17**	**3307**	**9.80**	**3357**	**10.45**	**3406**	**11.10**	**3514**	**12.41**

VOLUME CFM	O.V. FPM	5" SP RPM	5" SP BHP	6" SP RPM	6" SP BHP	7" SP RPM	7" SP BHP	8" SP RPM	8" SP BHP	9" SP RPM	9" SP BHP	10" SP RPM	10" SP BHP	11" SP RPM	11" SP BHP	12" SP RPM	12" SP BHP
2100	1363	2183	2.81														
2400	1558	2214	3.02	2401	3.78												
2700	1753	2246	3.25	2433	4.04	2605	4.87	2765	5.73								
3000	1948	2301	3.55	2465	4.31	2637	5.17	2797	6.08	2947	7.02	3090	7.99				
3300	2142	2363	3.89	2523	4.68	2671	5.50	2828	6.43	2979	7.41	3121	8.42	**3257**	**9.45**	**3386**	**10.52**
3600	2337	2429	4.28	2586	5.10	2733	5.96	2870	6.85	3011	7.81	3153	8.86	**3288**	**9.93**	**3418**	**11.04**
3900	2532	2501	4.71	2651	5.55	2795	6.44	2932	7.37	3061	8.33	3185	9.31	**3320**	**10.42**	**3449**	**11.56**
4200	2727	2574	5.17	2722	6.06	2860	6.97	2995	7.93	3123	8.93	**3245**	**9.95**	**3361**	**10.99**	**3481**	**12.11**
4500	2922	2656	5.68	2795	6.60	2932	7.56	3060	8.54	3186	9.56	**3307**	**10.62**	**3423**	**11.71**	**3534**	**12.81**
4800	3116	2746	6.24	2870	7.19	3004	8.19	3132	9.21	**3252**	**10.25**	**3371**	**11.34**	**3486**	**12.46**	**3596**	**13.61**
5100	3311	2838	6.85	2960	7.84	3078	8.86	**3204**	**9.93**	**3324**	**11.01**	**3438**	**12.12**	**3549**	**13.26**	**3659**	**14.45**
5400	3506	2931	7.51	3052	8.54	3165	9.60	**3278**	**10.69**	**3396**	**11.82**	**3509**	**12.97**	**3618**	**14.13**	**3723**	**15.33**
5700	3701	3026	8.21	3144	9.29	**3256**	**10.40**	**3361**	**11.52**	**3470**	**12.68**	**3582**	**13.87**	**3689**	**15.08**	**3793**	**16.31**
6000	3896	3122	8.98	**3238**	**10.10**	**3347**	**11.24**	**3452**	**12.41**	**3552**	**13.60**	**3655**	**14.82**	**3762**	**16.07**	**3865**	**17.35**
6300	4090	**3219**	**9.80**	**3333**	**10.96**	**3441**	**12.15**	**3543**	**13.36**	**3642**	**14.59**	**3737**	**15.84**	**3835**	**17.12**	**3937**	**18.44**
6600	4285	**3318**	**10.68**	**3429**	**11.89**	**3535**	**13.12**	**3636**	**14.37**	**3733**	**15.64**	**3827**	**16.93**	**3917**	**18.24**	*4011*	*19.59*
6900	4480	**3419**	**11.63**	**3525**	**12.87**	**3630**	**14.15**	**3730**	**15.45**	**3826**	**16.76**	**3918**	**18.09**	*4007*	*19.45*	*4093*	*20.82*
7200	4675	**3520**	**12.64**	**3625**	**13.93**	**3726**	**15.25**	**3824**	**16.59**	**3919**	**17.94**	*4010*	*19.32*	*4098*	*20.71*	*4183*	*22.13*
7500	4870	**3622**	**13.72**	**3725**	**15.06**	**3824**	**16.41**	**3920**	**17.79**	*4013*	*19.20*	*4103*	*20.62*	*4190*	*22.05*	*4274*	*23.51*

VOLUME CFM	O.V. FPM	13" SP RPM	13" SP BHP	14" SP RPM	14" SP BHP	15" SP RPM	15" SP BHP	16" SP RPM	16" SP BHP	17" SP RPM	17" SP BHP	18" SP RPM	18" SP BHP	19" SP RPM	19" SP BHP
3600	2337	**3542**	**12.17**	**3661**	**13.33**										
3900	2532	**3573**	**12.73**	**3693**	**13.93**	**3808**	**15.15**	**3919**	**16.40**	*4027*	*17.68*				
4200	2727	**3605**	**13.31**	**3724**	**14.55**	**3839**	**15.81**	**3951**	**17.09**	*4059*	*18.40*	*4164*	*19.74*	*4266*	*21.09*
4500	2922	**3640**	**13.94**	**3756**	**15.18**	**3871**	**16.47**	*3982*	*17.80*	*4090*	*19.14*	*4195*	*20.51*		
4800	3116	**3702**	**14.77**	**3804**	**15.96**	**3904**	**17.17**	*4014*	*18.52*	*4122*	*19.90*	*4227*	*21.31*		
5100	3311	**3764**	**15.65**	**3866**	**16.88**	*3965*	*18.13*	*4061*	*19.39*	*4154*	*20.68*	*4259*	*22.12*		
5400	3506	**3828**	**16.58**	**3929**	**17.84**	*4027*	*19.13*	*4123*	*20.44*	*4215*	*21.76*				
5700	3701	**3892**	**17.55**	*3993*	*18.85*	*4090*	*20.18*	*4185*	*21.53*	*4277*	*22.89*				
6000	3896	*3964*	*18.63*	*4059*	*19.94*	*4154*	*21.28*	*4248*	*22.67*						
6300	4090	*4036*	*19.77*	*4131*	*21.12*	*4223*	*22.48*								
6600	4285	*4109*	*20.97*	*4203*	*22.36*										
6900	4480	*4182*	*22.22*	*4276*	*23.65*										

Performance certified is for installation type B - Free inlet, Ducted Outlet. Performance ratings do not include the effects of appurtenances (accessories). Power rating (BHP) does not include transmission losses.

HDBI-180

BELT DRIVE RATING TABLES

Ratings at 70˚F., .075 Density, Sea Level

WHEEL
Dia. - 18.25"

OUTLET O.D.
Size - 13.88" x 20.38"
Area - 1.90 Sq. Ft. I.D.

INLET O.D.
Size - 20.00"
Area - 2.13 Sq.Ft. I.D.

All wheels are HDBI type
Class II = light face above Class III
Class III = bold face
Class IV = italic face below Class III

SEE PAGE 24 FOR MAX. WHEEL RPM & WR².

VOLUME CFM	O.V. FPM	0" SP RPM	0" SP BHP	½" SP RPM	½" SP BHP	1" SP RPM	1" SP BHP	1½" SP RPM	1½" SP BHP	2" SP RPM	2" SP BHP	2½" SP RPM	2½" SP BHP	3" SP RPM	3" SP BHP	4" SP RPM	4" SP BHP
2800	1473	852	.28	1010	.54	1150	.82	1272	1.12	1392	1.46	1502	1.82	1605	2.18	1804	3.00
3200	1684	974	.42	1112	.70	1243	1.02	1356	1.35	1463	1.70	1568	2.09	1667	2.50	1848	3.33
3600	1894	1095	.60	1217	.91	1339	1.27	1447	1.62	1545	1.99	1640	2.39	1735	2.83	1910	3.74
4000	2105	1217	.82	1328	1.16	1439	1.55	1541	1.95	1635	2.35	1722	2.76	1806	3.20	1975	4.19
4400	2315	1339	1.09	1441	1.47	1540	1.88	1638	2.32	1728	2.76	1812	3.20	1890	3.65	2046	4.65
4800	2526	1461	1.42	1556	1.83	1644	2.26	1737	2.73	1823	3.22	1904	3.69	1980	4.17	2120	5.17
5200	2736	1582	1.80	1671	2.25	1751	2.70	1838	3.21	1920	3.73	1998	4.25	2072	4.76	2209	5.81
5600	2947	1704	2.25	1787	2.73	1863	3.22	1941	3.74	2020	4.29	2094	4.86	2166	5.42	2300	6.53
6000	3157	1826	2.77	1903	3.28	1975	3.80	2045	4.34	2121	4.93	2193	5.53	2261	6.14	2392	7.32
6400	3368	1947	3.36	2021	3.90	2089	4.46	2153	5.02	2224	5.63	2294	6.27	2360	6.91	2485	8.19
6800	3578	2069	4.03	2138	4.60	2203	5.19	2265	5.79	2328	6.42	2395	7.08	2459	7.76	2580	9.13
7200	3789	2191	4.78	2256	5.39	2318	6.01	2377	6.64	2434	7.28	2498	7.98	2560	8.69	2678	10.14
7600	4000	2313	5.62	2375	6.27	2434	6.92	2490	7.58	2545	8.25	2602	8.96	2662	9.70	2777	11.22
8000	4210	2434	6.56	2494	7.23	2550	7.92	2604	8.62	2657	9.32	2707	10.03	2766	10.81	2877	12.39
8400	4421	2556	7.59	2613	8.30	2667	9.02	2719	9.75	2769	10.49	2818	11.23	2870	12.01	**2978**	**13.66**
8800	4631	2678	8.73	2732	9.47	2784	10.22	2834	10.99	2883	11.75	**2930**	**12.53**	**2975**	**13.31**	**3080**	**15.03**
9200	4842	2800	9.98	2851	10.75	2901	11.54	**2950**	**12.33**	**2997**	**13.13**	**3042**	**13.94**	**3086**	**14.75**	**3184**	**16.50**

NOTE: See pages 27, 29 or 30 for minimum

VOLUME CFM	O.V. FPM	5" SP RPM	5" SP BHP	6" SP RPM	6" SP BHP	7" SP RPM	7" SP BHP	8" SP RPM	8" SP BHP	9" SP RPM	9" SP BHP	10" SP RPM	10" SP BHP	11" SP RPM	11" SP BHP	12" SP RPM	12" SP BHP
3200	1684	2022	4.26	2192	5.28	2347	6.36										
3600	1894	2069	4.68	2223	5.69	2378	6.83	2523	8.01	2659	9.23						
4000	2105	2131	5.20	2275	6.23	2410	7.31	2554	8.55	2690	9.83	2819	11.15	**2942**	**12.51**	**3059**	**13.91**
4400	2315	2196	5.75	2337	6.86	2470	8.00	2594	9.17	2722	10.45	2850	11.82	**2973**	**13.24**	**3090**	**14.69**
4800	2526	2266	6.32	2402	7.53	2532	8.74	2655	9.97	2772	11.23	2882	12.52	**3004**	**13.99**	**3121**	**15.50**
5200	2736	2339	6.94	2472	8.20	2597	9.51	2717	10.83	2833	12.15	**2943**	**13.51**	**3048**	**14.89**	**3152**	**16.33**
5600	2947	2422	7.68	2544	8.93	2668	10.30	2783	11.71	2896	13.13	**3005**	**14.55**	**3109**	**15.99**	**3209**	**17.46**
6000	3157	2512	8.53	2623	9.77	2739	11.15	2854	12.62	**2963**	**14.13**	**3067**	**15.65**	**3171**	**17.16**	**3271**	**18.69**
6400	3368	2603	9.46	2713	10.76	2816	12.09	**2926**	**13.59**	**3034**	**15.15**	**3136**	**16.75**	**3235**	**18.39**	**3333**	**19.99**
6800	3578	2695	10.47	2803	11.84	**2905**	**13.23**	**3001**	**14.65**	**3106**	**16.25**	**3207**	**17.91**	**3305**	**19.60**	**3399**	**21.33**
7200	3789	2789	11.57	2895	13.00	**2995**	**14.45**	**3090**	**15.93**	**3180**	**17.43**	**3279**	**19.13**	**3376**	**20.88**	**3469**	**22.67**
7600	4000	2884	12.76	**2988**	**14.25**	**3086**	**15.76**	**3179**	**17.31**	**3269**	**18.87**	**3355**	**20.46**	**3448**	**22.24**	**3541**	**24.08**
8000	4210	**2982**	**14.01**	**3082**	**15.60**	**3178**	**17.18**	**3270**	**18.78**	**3358**	**20.41**	**3443**	**22.05**	**3525**	**23.73**	*3613*	*25.57*
8400	4421	**3081**	**15.34**	**3177**	**17.05**	**3272**	**18.69**	**3363**	**20.36**	**3449**	**22.05**	**3533**	**23.76**	*3613*	*25.49*	*3691*	*27.24*
8800	4631	**3180**	**16.77**	**3275**	**18.55**	**3367**	**20.31**	**3456**	**22.04**	**3541**	**23.79**	*3623*	*25.57*	*3703*	*27.36*	*3780*	*29.17*
9200	4842	**3281**	**18.31**	**3374**	**20.16**	**3463**	**22.03**	**3550**	**23.84**	*3634*	*25.65*	*3715*	*27.49*	*3794*	*29.34*	*3870*	*31.22*

VOLUME CFM	O.V. FPM	13" SP RPM	13" SP BHP	14" SP RPM	14" SP BHP	15" SP RPM	15" SP BHP	16" SP RPM	16" SP BHP	17" SP RPM	17" SP BHP	18" SP RPM	18" SP BHP	19" SP RPM	19" SP BHP
4400	2315	**3202**	**16.19**	**3310**	**17.71**										
4800	2526	**3233**	**17.05**	**3341**	**18.63**	**3445**	**20.24**	**3546**	**21.89**	*3644*	*23.57*				
5200	2736	**3264**	**17.93**	**3372**	**19.57**	**3476**	**21.24**	**3577**	**22.94**	*3674*	*24.67*	*3769*	*26.44*	*3862*	*28.23*
5600	2947	**3306**	**18.96**	**3403**	**20.54**	**3507**	**22.26**	*3608*	*24.02*	*3706*	*25.81*	*3800*	*27.63*		
6000	3157	**3367**	**20.25**	**3459**	**21.84**	**3548**	**23.45**	*3639*	*25.13*	*3737*	*26.98*	*3832*	*28.85*		
6400	3368	**3428**	**21.62**	**3520**	**23.26**	*3609*	*24.93*	*3696*	*26.62*	*3780*	*28.34*	*3863*	*30.11*		
6800	3578	**3491**	**23.05**	**3583**	**24.76**	*3671*	*26.49*	*3757*	*28.25*	*3840*	*30.02*				
7200	3789	**3559**	**24.48**	*3646*	*26.33*	*3734*	*28.13*	*3819*	*29.95*						
7600	4000	*3630*	*25.96*	*3716*	*27.86*	*3799*	*29.79*	*3882*	*31.73*						
8000	4210	*3701*	*27.51*	*3787*	*29.47*	*3870*	*31.47*								
8400	4421	*3774*	*29.14*	*3859*	*31.17*										
8800	4631	*3855*	*31.01*												

Performance certified is for installation type B - Free inlet, Ducted Outlet. Performance ratings do not include the effects of appurtenances (accessories). Power rating (BHP) does not include transmission losses.

HDBI-200

BELT DRIVE RATING TABLES

Ratings at 70˚F., .075 Density, Sea Level

WHEEL
Dia. - 20.00"

OUTLET O.D.
Size - 15.25" x 22.38"
Area - 2.30 Sq. Ft. I.D.

INLET O.D.
Size - .22"
Area - 2.58 Sq.Ft. I.D.

All wheels are HDBI type
Class II = light face above Class III
Class III = bold face
Class IV = italic face below Class III

SEE PAGE 24 FOR MAX. WHEEL RPM & WR².

VOLUME CFM	O.V. FPM	0" SP RPM	0" SP BHP	½" SP RPM	½" SP BHP	1" SP RPM	1" SP BHP	1½" SP RPM	1½" SP BHP	2" SP RPM	2" SP BHP	2½" SP RPM	2½" SP BHP	3" SP RPM	3" SP BHP	4" SP RPM	4" SP BHP
4200	1826	971	.59	1085	.95	1199	1.32	1299	1.71	1389	2.12	1479	2.56	1566	3.01	1728	3.97
4600	2000	1064	.78	1169	1.17	1274	1.57	1370	1.99	1457	2.43	1537	2.88	1620	3.36	1775	4.35
5000	2173	1156	1.00	1254	1.42	1350	1.86	1442	2.31	1526	2.77	1604	3.25	1677	3.75	1829	4.80
5400	2347	1249	1.26	1340	1.71	1428	2.18	1516	2.66	1597	3.16	1673	3.67	1744	4.19	1883	5.28
5800	2521	1341	1.56	1427	2.05	1507	2.55	1592	3.06	1670	3.58	1744	4.12	1813	4.67	1941	5.81
6200	2695	1433	1.91	1515	2.43	1588	2.96	1669	3.50	1744	4.05	1815	4.62	1883	5.20	2008	6.40
6600	2869	1526	2.30	1603	2.85	1673	3.42	1746	3.99	1819	4.57	1888	5.17	1954	5.78	2077	7.03
7000	3043	1618	2.75	1691	3.33	1758	3.93	1825	4.53	1896	5.15	1963	5.77	2026	6.41	2146	7.72
7400	3217	1711	3.25	1780	3.86	1844	4.49	1905	5.13	1973	5.77	2038	6.43	2100	7.09	2217	8.46
7800	3391	1803	3.80	1869	4.45	1931	5.11	1989	5.78	2052	6.46	2115	7.14	2175	7.84	2288	9.26
8200	3565	1896	4.42	1959	5.09	2018	5.79	2074	6.49	2131	7.21	2192	7.92	2251	8.64	2361	10.12
8600	3739	1988	5.09	2048	5.80	2105	6.53	2159	7.26	2211	8.01	2270	8.76	2327	9.51	2435	11.05
9000	3913	2081	5.84	2138	6.58	2193	7.34	2245	8.10	2295	8.89	2349	9.67	2405	10.45	2510	12.05
9400	4086	2173	6.65	2229	7.43	2281	8.21	2331	9.01	2380	9.83	2428	10.65	2483	11.46	2586	13.12
9800	4260	2266	7.54	2319	8.34	2370	9.16	2418	10.00	2465	10.84	2511	11.69	2561	12.54	**2662**	**14.26**
10200	4434	2358	8.50	2409	9.34	2458	10.19	2505	11.05	2551	11.93	2595	12.81	2641	13.70	**2739**	**15.48**
10600	4608	2451	9.54	2500	10.41	2547	11.29	2593	12.19	2637	13.09	**2680**	**14.01**	**2722**	**14.94**	**2817**	**16.78**
11000	4782	2543	10.66	2591	11.56	2637	12.48	**2681**	**13.41**	**2724**	**14.34**	**2765**	**15.29**	**2806**	**16.25**	**2895**	**18.16**
11400	4956	2636	11.87	**2682**	**12.80**	**2726**	**13.75**	**2769**	**14.71**	**2811**	**15.68**	**2851**	**16.65**	**2891**	**17.64**	**2974**	**19.63**

NOTE: See pages 27, 29 or 30 for minimum motor frame sizes regardless of BHP.

VOLUME CFM	O.V. FPM	5" SP RPM	5" SP BHP	6" SP RPM	6" SP BHP	7" SP RPM	7" SP BHP	8" SP RPM	8" SP BHP	9" SP RPM	9" SP BHP	10" SP RPM	10" SP BHP	11" SP RPM	11" SP BHP	12" SP RPM	12" SP BHP
4200	1826	1874	4.99	2021	6.14	2163	7.39	2295	8.69	2420	10.05						
4600	2000	1921	5.43	2053	6.56	2187	7.81	2319	9.16	2443	10.56	2560	12.01	**2672**	**13.51**		
5000	2173	1968	5.91	2099	7.09	2221	8.31	2343	9.64	2467	11.09	2584	12.59	**2696**	**14.13**	**2803**	**15.72**
5400	2347	2019	6.44	2146	7.65	2267	8.93	2381	10.25	2490	11.63	2608	13.18	**2719**	**14.77**	**2826**	**16.41**
5800	2521	2073	7.02	2196	8.27	2315	9.59	2427	10.96	2533	12.37	2634	13.82	**2743**	**15.43**	**2850**	**17.12**
6200	2695	2128	7.64	2250	8.95	2364	10.29	2474	11.71	2580	13.18	**2680**	**14.68**	**2776**	**16.21**	**2874**	**17.84**
6600	2869	2189	8.32	2304	9.68	2417	11.08	2523	12.51	2627	14.03	**2727**	**15.58**	**2823**	**17.17**	**2914**	**18.79**
7000	3043	2257	9.07	2360	10.46	2471	11.92	2577	13.41	**2676**	**14.93**	**2774**	**16.53**	**2869**	**18.17**	**2960**	**19.85**
7400	3217	2325	9.87	2427	11.31	2526	12.81	2631	14.36	**2729**	**15.94**	**2824**	**17.55**	**2917**	**19.23**	**3007**	**20.96**
7800	3391	2395	10.73	2495	12.23	2588	13.77	**2685**	**15.36**	**2784**	**17.00**	**2877**	**18.67**	**2967**	**20.36**	**3055**	**22.12**
8200	3565	2465	11.65	2563	13.21	2656	14.80	**2744**	**16.43**	**2838**	**18.12**	**2931**	**19.84**	**3020**	**21.59**	**3106**	**23.37**
8600	3739	2537	12.63	2633	14.25	**2724**	**15.90**	**2811**	**17.58**	**2894**	**19.30**	**2986**	**21.08**	**3074**	**22.89**	**3159**	**24.73**
9000	3913	2609	13.68	**2704**	**15.36**	**2794**	**17.07**	**2879**	**18.81**	**2961**	**20.58**	**3041**	**22.38**	**3129**	**24.25**	**3213**	**26.15**
9400	4086	**2682**	**14.81**	**2775**	**16.54**	**2864**	**18.31**	**2948**	**20.10**	**3029**	**21.93**	**3107**	**23.78**	**3184**	**25.68**	**3268**	**27.63**
9800	4260	**2757**	**16.01**	**2847**	**17.79**	**2934**	**19.62**	**3018**	**21.47**	**3098**	**23.36**	**3174**	**25.27**	**3248**	**27.21**	*3323*	*29.19*
10200	4434	**2832**	**17.29**	**2920**	**19.13**	**3006**	**21.01**	**3088**	**22.92**	**3167**	**24.86**	**3243**	**26.83**	*3316*	*28.82*	*3387*	*30.85*
10600	4608	**2908**	**18.65**	**2994**	**20.54**	**3078**	**22.48**	**3159**	**24.45**	**3237**	**26.45**	*3312*	*28.47*	*3384*	*30.52*	*3454*	*32.60*
11000	4782	**2985**	**20.09**	**3070**	**22.05**	**3151**	**24.03**	**3230**	**26.06**	*3307*	*28.12*	*3381*	*30.20*	*3453*	*32.31*	*3523*	*34.44*
11400	4956	**3062**	**21.62**	**3145**	**23.64**	**3225**	**25.68**	*3303*	*27.76*	*3379*	*29.87*	*3452*	*32.01*	*3523*	*34.18*	*3591*	*36.37*

VOLUME CFM	O.V. FPM	13" SP RPM	13" SP BHP	14" SP RPM	14" SP BHP	15" SP RPM	15" SP BHP	16" SP RPM	16" SP BHP	17" SP RPM	17" SP BHP	18" SP RPM	18" SP BHP	19" SP RPM	19" SP BHP
5400	2347	**2928**	**18.09**	**3027**	**19.81**	**3122**	**21.57**								
5800	2521	**2952**	**18.84**	**3051**	**20.61**	**3146**	**22.42**	**3238**	**24.27**	*3327*	*26.15*				
6200	2695	**2976**	**19.62**	**3074**	**21.43**	**3169**	**23.29**	**3261**	**25.18**	*3350*	*27.11*	*3437*	*29.08*	*3521*	*31.08*
6600	2869	**3002**	**20.44**	**3098**	**22.28**	**3193**	**24.18**	**3285**	**26.12**	*3374*	*28.10*	*3460*	*30.11*	*3545*	*32.16*
7000	3043	**3048**	**21.56**	**3133**	**23.29**	**3217**	**25.09**	*3309*	*27.08*	*3398*	*29.11*	*3484*	*31.17*	*3568*	*33.26*
7400	3217	**3095**	**22.72**	**3179**	**24.51**	**3260**	**26.33**	*3339*	*28.17*	*3421*	*30.14*	*3508*	*32.25*		
7800	3391	**3142**	**23.93**	**3226**	**25.78**	*3307*	*27.65*	*3385*	*29.55*	*3462*	*31.48*	*3536*	*33.43*		
8200	3565	**3189**	**25.20**	**3273**	**27.10**	*3354*	*29.03*	*3432*	*30.99*	*3508*	*32.97*				
8600	3739	**3241**	**26.59**	*3321*	*28.48*	*3401*	*30.47*	*3479*	*32.48*	*3555*	*34.51*				
9000	3913	*3295*	*28.07*	*3374*	*30.01*	*3450*	*31.98*	*3527*	*34.03*						
9400	4086	*3349*	*29.61*	*3427*	*31.61*	*3503*	*33.64*								
9800	4260	*3404*	*31.22*	*3482*	*33.28*	*3557*	*35.37*								

Performance certified is for installation type B - Free inlet, Ducted Outlet. Performance ratings do not include the effects of appurtenances (accessories). Power rating (BHP) does not include transmission losses.

HDBI-220

BELT DRIVE RATING TABLES

Ratings at 70˚F., .075 Density, Sea Level

WHEEL
Dia. - 22.25"

OUTLET O.D.
Size - 16.88" x 24.88"
Area - 2.84 Sq. Ft. I.D.

INLET O.D.
Size - 24.63"
Area - 3.24 Sq.Ft. I.D.

SEE PAGE 24 FOR MAX. WHEEL RPM & WR².

All wheels are HDBI type
Class II = light face above Class III
Class III = bold face
Class IV = italic face below Class III

VOLUME CFM	O.V. FPM	0" SP RPM	0" SP BHP	½" SP RPM	½" SP BHP	1" SP RPM	1" SP BHP	1½" SP RPM	1½" SP BHP	2" SP RPM	2" SP BHP	2½" SP RPM	2½" SP BHP	3" SP RPM	3" SP BHP	4" SP RPM	4" SP BHP
4600	1619	765	.48	870	.85	962	1.22	1054	1.62	1137	2.04	1214	2.48	1299	2.99	1460	4.10
5200	1830	865	.70	959	1.11	1042	1.52	1125	1.96	1204	2.41	1277	2.89	1347	3.38	1494	4.52
5800	2042	965	.97	1051	1.43	1128	1.88	1199	2.35	1275	2.85	1345	3.36	1411	3.89	1534	4.99
6400	2253	1065	1.31	1144	1.80	1215	2.31	1281	2.82	1348	3.35	1415	3.90	1479	4.47	1597	5.64
7000	2464	1164	1.71	1237	2.25	1303	2.82	1366	3.36	1424	3.92	1488	4.51	1549	5.12	1662	6.37
7600	2676	1264	2.19	1332	2.77	1394	3.39	1453	3.98	1509	4.58	1561	5.19	1621	5.84	1732	7.17
8200	2887	1364	2.75	1427	3.38	1486	4.03	1541	4.69	1594	5.33	1645	5.98	1695	6.65	1803	8.06
8800	3098	1464	3.39	1523	4.07	1578	4.77	1630	5.48	1681	6.17	1730	6.86	1776	7.56	1875	9.03
9400	3309	1564	4.14	1619	4.86	1672	5.60	1721	6.36	1769	7.10	1816	7.83	1861	8.58	1949	10.11
10000	3521	1663	4.98	1716	5.75	1766	6.53	1813	7.34	1858	8.15	1903	8.92	1947	9.70	2029	11.30
10600	3732	1763	5.93	1813	6.75	1860	7.57	1906	8.42	1949	9.28	1991	10.12	2033	10.94	2113	12.61
11200	3943	1863	7.00	1910	7.85	1956	8.73	1999	9.62	2040	10.52	2080	11.43	2121	12.29	2198	14.05
11800	4154	1963	8.19	2008	9.09	2051	10.01	2092	10.94	2132	11.88	2171	12.84	2209	13.78	2284	15.61
12400	4366	2063	9.50	2106	10.44	2147	11.41	2187	12.38	2225	13.37	2262	14.37	2298	15.39	**2371**	**17.30**
13000	4577	2163	10.94	2204	11.93	2243	12.95	2281	13.96	**2318**	**15.00**	**2354**	**16.04**	**2389**	**17.10**	**2459**	**19.14**
13600	4788	2262	12.53	2302	13.57	**2340**	**14.62**	**2376**	**15.68**	**2412**	**16.76**	**2447**	**17.85**	**2481**	**18.95**	**2547**	**21.12**

NOTE: See pages 27, 29 or 30 for minimum motor frame sizes regardless of BHP.

VOLUME CFM	O.V. FPM	5" SP RPM	5" SP BHP	6" SP RPM	6" SP BHP	7" SP RPM	7" SP BHP	8" SP RPM	8" SP BHP	9" SP RPM	9" SP BHP	10" SP RPM	10" SP BHP	11" SP RPM	11" SP BHP	12" SP RPM	12" SP BHP
4600	1619	1629	5.38	1782	6.74	1922	8.17										
5200	1830	1635	5.78	1785	7.20	1926	8.70	2056	10.27	2179	11.90	2296	13.58				
5800	2042	1669	6.30	1797	7.70	1929	9.24	2060	10.88	2183	12.58	2299	14.34	**2410**	**16.15**	**2515**	**18.01**
6400	2253	1706	6.87	1831	8.33	1948	9.87	2064	11.49	2186	13.27	2303	15.10	**2413**	**16.98**	**2519**	**18.91**
7000	2464	1769	7.67	1868	9.02	1983	10.61	2092	12.28	2195	13.99	**2306**	**15.86**	**2417**	**17.82**	**2522**	**19.83**
7600	2676	1833	8.54	1930	9.97	2021	11.43	2127	13.14	2229	14.93	**2326**	**16.76**	**2420**	**18.66**	**2526**	**20.74**
8200	2887	1902	9.51	1994	11.00	2084	12.54	2169	14.12	2264	15.91	**2360**	**17.82**	**2453**	**19.78**	**2541**	**21.78**
8800	3098	1972	10.56	2062	12.13	2148	13.75	2232	15.40	**2311**	**17.09**	**2395**	**18.92**	**2487**	**20.96**	**2575**	**23.03**
9400	3309	2044	11.72	2132	13.36	2215	15.05	2296	16.78	**2374**	**18.54**	**2449**	**20.34**	**2522**	**22.19**	**2610**	**24.34**
10000	3521	2116	12.97	2203	14.70	2285	16.46	**2362**	**18.26**	**2438**	**20.10**	**2512**	**21.97**	**2583**	**23.87**	**2652**	**25.81**
10600	3732	2190	14.34	2275	16.15	**2356**	**17.99**	**2432**	**19.86**	**2505**	**21.77**	**2576**	**23.71**	**2647**	**25.70**	**2714**	**27.70**
11200	3943	2271	15.84	**2348**	**17.71**	**2427**	**19.63**	**2503**	**21.58**	**2575**	**23.57**	**2644**	**25.58**	**2711**	**27.63**	**2778**	**29.72**
11800	4154	**2355**	**17.48**	**2422**	**19.39**	**2500**	**21.39**	**2574**	**23.42**	**2645**	**25.49**	**2713**	**27.58**	**2779**	**29.70**	*2843*	*31.86*
12400	4366	**2440**	**19.25**	**2506**	**21.24**	**2574**	**23.28**	**2646**	**25.40**	**2716**	**27.54**	**2784**	**29.71**	*2848*	*31.91*	*2911*	*34.14*
13000	4577	**2526**	**21.17**	**2590**	**23.23**	**2652**	**25.33**	**2720**	**27.50**	**2789**	**29.73**	*2855*	*31.98*	*2919*	*34.26*	*2981*	*36.56*
13600	4788	**2613**	**23.23**	**2675**	**25.37**	**2735**	**27.54**	**2794**	**29.75**	*2862*	*32.06*	*2927*	*34.39*	*2990*	*36.75*	*3051*	*39.13*

VOLUME CFM	O.V. FPM	13" SP RPM	13" SP BHP	14" SP RPM	14" SP BHP	15" SP RPM	15" SP BHP	16" SP RPM	16" SP BHP	17" SP RPM	17" SP BHP	18" SP RPM	18" SP BHP	19" SP RPM	19" SP BHP	20" SP RPM	20" SP BHP
6400	2253	**2620**	**20.90**	**2718**	**22.93**	**2812**	**25.01**										
7000	2464	**2624**	**21.88**	**2721**	**23.99**	**2815**	**26.14**	*2906*	*28.33*	*2994*	*30.57*	*3080*	*32.85*				
7600	2676	**2627**	**22.88**	**2725**	**25.05**	**2819**	**27.28**	*2910*	*29.55*	*2998*	*31.86*	*3084*	*34.21*	*3167*	*36.60*	*3248*	*39.03*
8200	2887	**2631**	**23.87**	**2728**	**26.13**	**2822**	**28.42**	*2913*	*30.76*	*3001*	*33.15*	*3087*	*35.57*	*3170*	*38.04*	*3251*	*40.54*
8800	3098	**2660**	**25.15**	**2741**	**27.31**	*2826*	*29.57*	*2917*	*31.99*	*3005*	*34.45*	*3091*	*36.94*	*3174*	*39.48*	*3255*	*42.06*
9400	3309	**2694**	**26.53**	**2775**	**28.76**	*2854*	*31.03*	*2930*	*33.34*	*3008*	*35.75*	*3094*	*38.32*	*3177*	*40.93*	*3258*	*43.59*
10000	3521	**2729**	**27.97**	**2810**	**30.28**	*2888*	*32.62*	*2964*	*35.00*	*3038*	*37.42*	*3109*	*39.88*	*3181*	*42.39*	*3262*	*45.12*
10600	3732	**2780**	**29.74**	*2845*	*31.85*	*2923*	*34.27*	*2999*	*36.72*	*3072*	*39.22*	*3144*	*41.75*	*3213*	*44.31*	*3281*	*46.90*
11200	3943	*2843*	*31.83*	*2906*	*33.98*	*2967*	*36.14*	*3034*	*38.51*	*3107*	*41.08*	*3178*	*43.68*	*3248*	*46.32*	*3315*	*48.99*
11800	4154	*2907*	*34.05*	*2969*	*36.27*	*3029*	*38.51*	*3088*	*40.78*	*3145*	*43.07*	*3213*	*45.68*	*3282*	*48.39*	*3350*	*51.14*
12400	4366	*2972*	*36.40*	*3033*	*38.69*	*3093*	*41.01*	*3151*	*43.36*	*3208*	*45.73*	*3263*	*48.12*	*3318*	*50.54*	*3385*	*53.36*
13000	4577	*3041*	*38.90*	*3099*	*41.25*	*3157*	*43.65*	*3215*	*46.07*	*3271*	*48.51*	*3326*	*50.98*	*3380*	*53.48*	*3433*	*55.99*
13600	4788	*3110*	*41.54*	*3168*	*43.98*	*3224*	*46.44*	*3280*	*48.92*	*3335*	*51.45*	*3390*	*53.99*	*3443*	*56.56*		

Performance certified is for installation type B - Free inlet, Ducted Outlet. Performance ratings do not include the effects of appurtenances (accessories). Power rating (BHP) does not include transmission losses.

HDBI-240

BELT DRIVE RATING TABLES

Ratings at 70˚F., .075 Density, Sea Level

WHEEL
Dia. - 24.50"

OUTLET O.D.
Size - 18.56" x 27.38"
Area - 3.45 Sq. Ft. I.D.

INLET O.D.
Size - 27.00"
Area - 3.90 Sq.Ft. I.D.

All wheels are HDBI type
Class II = light face above Class III
Class III = bold face
Class IV = italic face below Class III

SEE PAGE 24 FOR MAX. WHEEL RPM & WR².

VOLUME CFM	O.V. FPM	0" SP RPM	0" SP BHP	1/4" SP RPM	1/4" SP BHP	1/2" SP RPM	1/2" SP BHP	3/4" SP RPM	3/4" SP BHP	1" SP RPM	1" SP BHP	1 1/2" SP RPM	1 1/2" SP BHP	2" SP RPM	2" SP BHP	2 1/2" SP RPM	2 1/2" SP BHP
5000	1449	623	.42	678	.62	727	.82	772	1.02	821	1.23	908	1.68	987	2.16	1073	2.71
5800	1681	723	.66	771	.89	814	1.12	856	1.34	894	1.58	977	2.08	1051	2.60	1120	3.15
6600	1913	822	.97	865	1.23	905	1.49	942	1.75	978	2.01	1049	2.56	1120	3.13	1184	3.73
7400	2144	922	1.37	961	1.66	997	1.95	1030	2.25	1064	2.54	1125	3.12	1191	3.75	1254	4.40
8200	2376	1022	1.87	1057	2.18	1090	2.51	1121	2.83	1152	3.16	1210	3.80	1264	4.46	1325	5.16
9000	2608	1121	2.47	1154	2.81	1184	3.17	1213	3.52	1241	3.89	1296	4.59	1347	5.30	1398	6.04
9800	2840	1221	3.19	1251	3.56	1279	3.95	1307	4.33	1333	4.73	1384	5.50	1433	6.27	1479	7.05
10600	3072	1321	4.04	1348	4.44	1375	4.85	1400	5.27	1425	5.69	1472	6.55	1519	7.37	1563	8.20
11400	3304	1420	5.02	1446	5.45	1471	5.90	1495	6.34	1518	6.79	1563	7.71	1607	8.61	1649	9.50
12200	3536	1520	6.15	1544	6.62	1568	7.09	1590	7.56	1612	8.04	1655	9.02	1696	10.01	1737	10.95
13000	3768	1620	7.45	1642	7.94	1665	8.44	1686	8.95	1707	9.45	1748	10.49	1786	11.54	1825	12.57
13800	4000	1719	8.91	1741	9.43	1762	9.96	1782	10.50	1802	11.04	1841	12.13	1878	13.23	1914	14.36
14600	4231	1819	10.55	1839	11.10	1859	11.66	1879	12.22	1898	12.79	1935	13.94	1970	15.11	2005	16.29
15400	4463	1919	12.38	1938	12.96	1957	13.55	1975	14.15	1994	14.74	2029	15.95	2063	17.18	2096	18.41
16200	4695	2019	14.41	2037	15.02	2055	15.64	2072	16.26	2090	16.89	2124	18.16	**2157**	**19.44**	**2189**	**20.75**

NOTE: See pages 27, 29 or 30 for minimum motor frame sizes regardless of BHP.

VOLUME CFM	O.V. FPM	3" SP RPM	3" SP BHP	4" SP RPM	4" SP BHP	5" SP RPM	5" SP BHP	6" SP RPM	6" SP BHP	7" SP RPM	7" SP BHP	8" SP RPM	8" SP BHP	9" SP RPM	9" SP BHP	10" SP RPM	10" SP BHP
5000	1449	1155	3.32	1317	4.60												
5800	1681	1190	3.75	1335	5.12	1475	6.59	1608	8.13								
6600	1913	1246	4.34	1369	5.70	1497	7.26	1620	8.91	1742	10.62	1855	12.39				
7400	2144	1312	5.06	1422	6.44	1532	7.98	1648	9.72	1754	11.54	1867	13.43	1974	15.36	2074	17.35
8200	2376	1381	5.88	1486	7.36	1584	8.91	1682	10.59	1788	12.51	1888	14.49	1986	16.54	2086	18.64
9000	2608	1453	6.81	1554	8.39	1648	10.03	1736	11.74	1823	13.54	1922	15.62	2015	17.76	2103	19.96
9800	2840	1526	7.85	1625	9.54	1715	11.29	1800	13.09	1882	14.94	1958	16.83	2050	19.06	**2138**	**21.36**
10600	3072	1606	9.05	1696	10.83	1785	12.68	1867	14.57	1945	16.52	2021	18.52	2093	20.56	**2172**	**22.82**
11400	3304	1690	10.40	1770	12.25	1856	14.20	1936	16.20	2012	18.25	2085	20.35	**2156**	**22.49**	**2224**	**24.67**
12200	3536	1776	11.90	1850	13.84	1929	15.88	2007	17.99	2082	20.14	**2152**	**22.33**	**2220**	**24.57**	**2288**	**26.85**
13000	3768	1862	13.57	1934	15.62	2002	17.72	2079	19.94	**2152**	**22.19**	**2222**	**24.49**	**2288**	**26.82**	**2352**	**29.20**
13800	4000	1950	15.42	2020	17.58	2085	19.77	**2153**	**22.05**	**2224**	**24.41**	**2292**	**26.82**	**2357**	**29.25**	**2420**	**31.73**
14600	4231	2039	17.46	2106	19.72	**2169**	**22.02**	**2230**	**24.37**	**2297**	**26.82**	**2364**	**29.33**	**2428**	**31.87**	**2490**	**34.45**
15400	4463	2129	19.67	**2193**	**22.06**	**2255**	**24.47**	**2314**	**26.92**	**2371**	**29.41**	**2436**	**32.03**	**2500**	**34.68**	**2560**	**37.37**
16200	4695	**2220**	**22.05**	**2281**	**24.62**	**2341**	**27.13**	**2398**	**29.68**	**2454**	**32.28**	**2510**	**34.94**	*2572*	*37.70*	*2632*	*40.49*

VOLUME CFM	O.V. FPM	11" SP RPM	11" SP BHP	12" SP RPM	12" SP BHP	13" SP RPM	13" SP BHP	14" SP RPM	14" SP BHP	15" SP RPM	15" SP BHP	16" SP RPM	16" SP BHP	17" SP RPM	17" SP BHP	18" SP RPM	18" SP BHP
8200	2376	**2182**	**20.79**	**2274**	**22.99**	**2361**	**25.23**										
9000	2608	**2194**	**22.23**	**2286**	**24.54**	**2374**	**26.90**	**2458**	**29.29**	**2539**	**31.73**	*2618*	*34.21*				
9800	2840	**2221**	**23.71**	**2302**	**26.12**	**2386**	**28.59**	**2470**	**31.10**	**2552**	**33.66**	*2630*	*36.25*	*2707*	*38.88*	*2781*	*41.54*
10600	3072	**2256**	**25.28**	**2336**	**27.78**	**2413**	**30.34**	**2487**	**32.95**	**2564**	**35.62**	*2643*	*38.32*	*2719*	*41.07*	*2793*	*43.85*
11400	3304	**2291**	**26.91**	**2370**	**29.52**	**2447**	**32.18**	**2521**	**34.89**	*2592*	*37.65*	*2661*	*40.45*	*2731*	*43.30*	*2805*	*46.19*
12200	3536	**2352**	**29.17**	**2414**	**31.53**	**2482**	**34.10**	**2555**	**36.91**	*2627*	*39.77*	*2695*	*42.66*	*2762*	*45.61*	*2827*	*48.59*
13000	3768	**2416**	**31.62**	**2477**	**34.08**	**2536**	**36.57**	*2594*	*39.10*	*2661*	*41.97*	*2730*	*44.97*	*2797*	*48.01*		
13800	4000	**2480**	**34.24**	**2541**	**36.80**	*2599*	*39.40*	*2656*	*42.02*	*2711*	*44.68*	*2765*	*47.37*	*2831*	*50.51*		
14600	4231	**2549**	**37.07**	*2606*	*39.72*	*2664*	*42.41*	*2720*	*45.14*	*2774*	*47.90*	*2828*	*50.69*				

Performance certified is for installation type B - Free inlet, Ducted Outlet. Performance ratings do not include the effects of appurtenances (accessories). Power rating (BHP) does not include transmission losses.

HDBI-270

BELT DRIVE RATING TABLES
Ratings at 70˚F., .075 Density, Sea Level

WHEEL
Dia. - 27.00"

OUTLET O.D.
Size - 20.44" x 30.13"
Area - 4.19 Sq. Ft. I.D.

INLET O.D.
Size - 30.00"
Area - 4.83 Sq.Ft. I.D.

SEE PAGE 24 FOR MAX. WHEEL RPM & WR².

All wheels are HDBI type
Class II = light face above Class III
Class III = bold face
Class IV = italic face below Class III

VOLUME CFM	O.V. FPM	0" SP RPM	0" SP BHP	1/4" SP RPM	1/4" SP BHP	1/2" SP RPM	1/2" SP BHP	3/4" SP RPM	3/4" SP BHP	1" SP RPM	1" SP BHP	1 1/2" SP RPM	1 1/2" SP BHP	2" SP RPM	2" SP BHP
5600	1336	500	.38	551	.59	599	.81	644	1.04	688	1.27	777	1.80		
6400	1527	571	.57	617	.81	660	1.06	700	1.31	739	1.57	814	2.11	894	2.73
7200	1718	643	.82	684	1.08	722	1.36	760	1.63	794	1.92	865	2.51	932	3.14
8000	1909	714	1.12	752	1.41	786	1.72	821	2.02	853	2.33	916	2.98	978	3.64
8800	2100	786	1.49	820	1.81	852	2.14	883	2.48	914	2.82	971	3.51	1029	4.23
9600	2291	857	1.94	889	2.29	919	2.64	947	3.01	975	3.38	1030	4.12	1082	4.90
10400	2482	928	2.46	958	2.84	986	3.23	1012	3.62	1038	4.02	1091	4.82	1139	5.64
11200	2673	1000	3.07	1027	3.48	1054	3.89	1079	4.32	1103	4.75	1152	5.60	1198	6.48
12000	2863	1071	3.78	1097	4.22	1122	4.66	1145	5.11	1168	5.56	1213	6.48	1259	7.41
12800	3054	1143	4.59	1167	5.05	1190	5.52	1213	6.00	1234	6.48	1276	7.47	1320	8.44
13600	3245	1214	5.50	1237	5.99	1259	6.49	1280	7.00	1301	7.51	1341	8.55	1381	9.59
14400	3436	1285	6.53	1307	7.05	1328	7.58	1348	8.11	1368	8.65	1406	9.75	1444	10.85
15200	3627	1357	7.68	1377	8.23	1397	8.79	1417	9.35	1436	9.92	1472	11.06	1507	12.24
16000	3818	1428	8.96	1448	9.54	1467	10.12	1485	10.71	1504	11.31	1539	12.51	1572	13.74
16800	4009	1500	10.38	1518	10.98	1537	11.59	1554	12.21	1572	12.83	1605	14.09	1638	15.37
17600	4200	1571	11.93	1589	12.56	1606	13.20	1623	13.85	1640	14.50	1673	15.81	1704	17.15
18400	4391	1642	13.63	1660	14.28	1676	14.96	1693	15.63	1709	16.31	1740	17.68	1770	19.07
19200	4582	1714	15.49	1730	16.17	1746	16.87	1762	17.58	1778	18.28	1808	19.71	1837	21.15
20000	4773	1785	17.50	1801	18.21	1816	18.95	1832	19.68	1847	20.41	**1876**	**21.89**	**1904**	**23.39**

NOTE: See pages 27, 29 or 30 for minimum motor frame sizes regardless of BHP.

VOLUME CFM	O.V. FPM	2 1/2" SP RPM	2 1/2" SP BHP	3" SP RPM	3" SP BHP	4" SP RPM	4" SP BHP	5" SP RPM	5" SP BHP	6" SP RPM	6" SP BHP	7" SP RPM	7" SP BHP	8" SP RPM	8" SP BHP
8000	1909	1039	4.36	1103	5.14										
8800	2100	1085	4.97	1140	5.76	1253	7.50								
9600	2291	1136	5.69	1186	6.49	1290	8.28	1390	10.20						
10400	2482	1187	6.48	1237	7.34	1328	9.12	1427	11.15	1518	13.25				
11200	2673	1242	7.37	1288	8.28	1376	10.15	1464	12.17	1554	14.37	1638	16.64		
12000	2863	1301	8.35	1341	9.32	1427	11.29	1506	13.32	1591	15.58	1674	17.95	1752	20.38
12800	3054	1361	9.44	1400	10.46	1479	12.54	1557	14.67	1629	16.86	1711	19.34	1789	21.87
13600	3245	1421	10.64	1459	11.70	1531	13.89	1607	16.13	1678	18.41	1749	20.82	1826	23.46
14400	3436	1482	11.95	1519	13.07	1588	15.36	1659	17.70	1729	20.09	1795	22.53	**1863**	**25.13**
15200	3627	1544	13.39	1580	14.56	1647	16.95	1712	19.40	1780	21.89	1845	24.43	**1907**	**27.02**
16000	3818	1606	14.96	1641	16.18	1707	18.67	1769	21.22	1832	23.83	**1896**	**26.47**	**1957**	**29.16**
16800	4009	1669	16.67	1703	17.95	1767	20.54	1827	23.19	**1885**	**25.90**	**1948**	**28.64**	**2008**	**31.43**
17600	4200	1734	18.50	1765	19.85	1828	22.55	**1887**	**25.30**	**1943**	**28.11**	**2000**	**30.96**	**2059**	**33.86**
18400	4391	1800	20.48	1828	21.90	**1889**	**24.71**	**1947**	**27.56**	**2002**	**30.47**	**2054**	**33.43**	**2111**	**36.43**
19200	4582	**1866**	**22.61**	**1893**	**24.09**	**1951**	**27.03**	**2007**	**29.99**	**2061**	**33.00**	**2112**	**36.06**	**2163**	**39.16**
20000	4773	**1932**	**24.91**	**1959**	**26.44**	**2013**	**29.51**	**2068**	**32.57**	**2121**	**35.69**	**2171**	**38.85**	**2220**	**42.06**

VOLUME CFM	O.V. FPM	9" SP RPM	9" SP BHP	10" SP RPM	10" SP BHP	11" SP RPM	11" SP BHP	12" SP RPM	12" SP BHP	13" SP RPM	13" SP BHP	14" SP RPM	14" SP BHP	15" SP RPM	15" SP BHP
12800	3054	**1862**	**24.46**												
13600	3245	**1898**	**26.15**	**1967**	**28.90**										
14400	3436	**1935**	**27.93**	**2004**	**30.78**	**2070**	**33.69**								
15200	3627	**1973**	**29.81**	**2041**	**32.77**	**2106**	**35.77**	**2169**	**38.83**	**2229**	**41.93**				
16000	3818	**2015**	**31.89**	**2078**	**34.85**	**2143**	**37.97**	**2206**	**41.13**	*2266*	*44.33*	*2324*	*47.58*		
16800	4009	**2065**	**34.27**	**2120**	**37.14**	**2181**	**40.27**	**2243**	**43.53**	*2302*	*46.84*	*2360*	*50.19*	*2416*	*53.59*
17600	4200	**2115**	**36.79**	**2170**	**39.77**	**2222**	**42.78**	*2280*	*46.05*	*2339*	*49.47*	*2397*	*52.93*	*2453*	*56.42*
18400	4391	**2167**	**39.47**	**2220**	**42.54**	*2272*	*45.66*	*2322*	*48.81*	*2377*	*52.21*	*2434*	*55.78*		
19200	4582	**2218**	**42.31**	*2271*	*45.48*	*2322*	*48.70*	*2372*	*51.95*	*2420*	*55.24*	*2472*	*58.75*		
20000	4773	*2271*	*45.31*	*2323*	*48.59*	*2373*	*51.91*	*2422*	*55.26*	*2470*	*58.65*				

Performance certified is for installation type B - Free inlet, Ducted Outlet. Performance ratings do not include the effects of appurtenances (accessories). Power rating (BHP) does not include transmission losses.

HDBI-300

BELT DRIVE RATING TABLES

Ratings at 70˚F., .075 Density, Sea Level

WHEEL
Dia. - 30.00"

OUTLET O.D.
Size - 22.75" x 33.56"
Area - 5.20 Sq. Ft. I.D.

INLET O.D.
Size - 33.50"
Area - 6.12 Sq.Ft. I.D.

All wheels are HDBI type
Class II = light face above Class III
Class III = bold face
Class IV = italic face below Class III

SEE PAGE 24 FOR MAX. WHEEL RPM & WR².

VOLUME CFM	O.V. FPM	0" SP RPM	0" SP BHP	1/4" SP RPM	1/4" SP BHP	1/2" SP RPM	1/2" SP BHP	3/4" SP RPM	3/4" SP BHP	1" SP RPM	1" SP BHP	1 1/2" SP RPM	1 1/2" SP BHP	2" SP RPM	2" SP BHP
8000	1538	521	.74	561	1.03	599	1.34	635	1.65	670	1.97	737	2.65	808	3.42
9000	1730	586	1.05	622	1.38	656	1.72	690	2.07	721	2.42	783	3.16	842	3.94
10000	1923	651	1.44	684	1.80	715	2.18	745	2.56	775	2.95	830	3.75	886	4.58
11000	2115	716	1.91	747	2.31	775	2.73	802	3.15	830	3.57	881	4.43	933	5.33
12000	2307	781	2.48	809	2.92	836	3.36	861	3.82	886	4.28	935	5.21	981	6.17
13000	2500	846	3.15	872	3.63	897	4.11	921	4.60	943	5.10	990	6.10	1034	7.12
14000	2692	911	3.94	936	4.45	959	4.96	981	5.49	1003	6.03	1046	7.10	1088	8.18
15000	2884	976	4.85	999	5.39	1021	5.94	1042	6.50	1062	7.07	1103	8.22	1143	9.37
16000	3076	1041	5.88	1063	6.46	1084	7.05	1104	7.64	1123	8.25	1160	9.48	1199	10.69
17000	3269	1106	7.05	1127	7.67	1146	8.29	1165	8.92	1184	9.56	1219	10.86	1255	12.16
18000	3461	1171	8.37	1191	9.02	1209	9.68	1227	10.35	1245	11.02	1279	12.38	1312	13.77
19000	3653	1236	9.85	1255	10.53	1272	11.22	1290	11.93	1307	12.63	1339	14.07	1370	15.53
20000	3846	1302	11.49	1319	12.20	1336	12.94	1352	13.67	1368	14.41	1400	15.91	1430	17.44
21000	4038	1367	13.30	1383	14.05	1399	14.82	1415	15.58	1431	16.36	1461	17.93	1490	19.53
22000	4230	1432	15.29	1448	16.07	1463	16.88	1478	17.68	1493	18.49	1522	20.14	1550	21.80
23000	4423	1497	17.47	1512	18.29	1527	19.13	1541	19.97	1556	20.82	1584	22.53	1611	24.26
24000	4615	1562	19.85	1576	20.69	1591	21.58	1605	22.46	1618	23.34	1645	25.12	1672	26.92
25000	4807	1627	22.43	1641	23.33	1655	24.23	1668	25.15	**1681**	**26.07**	**1707**	**27.92**	**1733**	**29.78**

NOTE: See pages 27, 29 or 30 for minimum motor frame sizes regardless of BHP.

VOLUME CFM	O.V. FPM	2 1/2" SP RPM	2 1/2" SP BHP	3" SP RPM	3" SP BHP	4" SP RPM	4" SP BHP	5" SP RPM	5" SP BHP	6" SP RPM	6" SP BHP	7" SP RPM	7" SP BHP	8" SP RPM	8" SP BHP
10000	1923	939	5.46	997	6.44										
11000	2115	982	6.25	1031	7.22	1133	9.38								
12000	2307	1029	7.16	1074	8.17	1166	10.37	1256	12.76						
13000	2500	1076	8.17	1120	9.24	1201	11.45	1290	13.96	1371	16.58				
14000	2692	1127	9.30	1167	10.44	1247	12.77	1324	15.26	1405	18.00	1480	20.82		
15000	2884	1181	10.55	1217	11.75	1293	14.21	1364	16.75	1439	19.52	1513	22.47	1583	25.50
16000	3076	1235	11.93	1270	13.20	1340	15.79	1410	18.45	1475	21.19	1547	24.23	1616	27.39
17000	3269	1290	13.46	1324	14.79	1388	17.51	1456	20.30	1520	23.16	1581	26.10	1650	29.39
18000	3461	1346	15.14	1379	16.53	1441	19.38	1504	22.30	1566	25.28	1625	28.33	**1684**	**31.51**
19000	3653	1403	16.97	1435	18.43	1495	21.40	1552	24.45	1613	27.57	1671	30.74	**1727**	**33.97**
20000	3846	1460	18.98	1491	20.50	1549	23.60	1605	26.78	1661	30.02	**1718**	**33.32**	**1772**	**36.68**
21000	4038	1518	21.15	1547	22.75	1604	25.98	1658	29.28	**1710**	**32.65**	**1765**	**36.08**	**1819**	**39.56**
22000	4230	1577	23.49	1604	25.18	1660	28.54	**1713**	**31.97**	**1763**	**35.46**	**1813**	**39.02**	**1866**	**42.64**
23000	4423	1637	26.01	1662	27.79	**1716**	**31.29**	**1767**	**34.85**	**1817**	**38.48**	**1863**	**42.16**	**1913**	**45.90**
24000	4615	**1697**	**28.74**	**1722**	**30.58**	**1772**	**34.25**	**1823**	**37.94**	**1871**	**41.69**	**1917**	**45.50**	**1961**	**49.37**
25000	4807	**1757**	**31.68**	**1781**	**33.59**	**1829**	**37.42**	**1878**	**41.24**	**1925**	**45.12**	**1971**	**49.06**	**2014**	**53.05**

VOLUME CFM	O.V. FPM	9" SP RPM	9" SP BHP	10" SP RPM	10" SP BHP	11" SP RPM	11" SP BHP	12" SP RPM	12" SP BHP	13" SP RPM	13" SP BHP
15000	2884	**1693**	**29.09**								
16000	3076	**1682**	**30.61**								
17000	3269	**1715**	**32.75**	**1778**	**36.17**						
18000	3461	**1749**	**35.00**	**1811**	**38.55**	**1870**	**42.16**				
19000	3653	**1783**	**37.37**	**1845**	**41.06**	**1903**	**44.80**	**1960**	**48.60**	**2014**	**52.46**
20000	3846	**1824**	**40.09**	**1879**	**43.70**	**1937**	**47.57**	**1993**	**51.51**	**2047**	**55.49**
21000	4038	**1870**	**43.10**	**1919**	**46.68**	**1971**	**50.48**	**2027**	**54.55**	*2081*	*58.67*
22000	4230	**1916**	**46.30**	**1965**	**50.01**	**2012**	**53.77**	**2061**	**57.74**	*2115*	*61.99*
23000	4423	**1963**	**49.69**	**2011**	**53.53**	**2057**	**57.42**	*2102*	*61.35*	*2149*	*65.46*
24000	4615	**2010**	**53.29**	**2058**	**57.26**	*2104*	*61.27*	*2148*	*65.33*	*2191*	*69.43*
25000	4807	**2058**	**57.11**	*2105*	*61.20*	*2150*	*65.34*	*2194*	*69.53*	*2237*	*73.75*

Performance certified is for installation type B - Free inlet, Ducted Outlet. Performance ratings do not include the effects of appurtenances (accessories). Power rating (BHP) does not include transmission losses.

HDBI-330

BELT DRIVE RATING TABLES

Ratings at 70˚F., .075 Density, Sea Level

WHEEL
Dia. -33.00"

OUTLET O.D.
Size - 24.88" x 36.88"
Area - 6.2 Sq. Ft. I.D.

INLET O.D.
Size - 36.75"
Area - 7.20 Sq.Ft. I.D.

SEE PAGE 24 FOR MAX. WHEEL RPM & WR².

All wheels are HDBI type
Class II = light face above Class III
Class III = bold face
Class IV = italic face below Class III

VOLUME CFM	O.V. FPM	0" SP RPM	0" SP BHP	1" SP RPM	1" SP BHP	2" SP RPM	2" SP BHP	3" SP RPM	3" SP BHP	4" SP RPM	4" SP BHP	5" SP RPM	5" SP BHP	6" SP RPM	6" SP BHP
12000	1935	587	1.69	700	3.51	812	5.67	911	7.94						
13000	2096	636	2.15	742	4.11	843	6.34	943	8.92	1025	11.19				
14000	2258	684	2.69	784	4.79	875	7.06	973	9.78	1057	12.40	1130	14.87		
15000	2419	733	3.31	826	5.56	910	7.91	1004	10.72	1088	13.72	1161	16.33		
16000	2580	782	4.02	869	6.41	951	8.89	1035	11.72	1118	14.86	1192	17.89	1258	20.69
17000	2741	831	4.82	914	7.35	991	9.97	1067	12.81	1149	16.09	1224	19.50	1289	22.51
18000	2903	880	5.72	959	8.39	1033	11.15	1100	14.01	1180	17.40	1254	20.94	1321	24.45
19000	3064	929	6.73	1004	9.54	1074	12.45	1140	15.43	1212	18.79	1284	22.47	1352	26.27
20000	3225	978	7.84	1050	10.80	1117	13.85	1181	16.97	1243	20.28	1315	24.10	1382	28.03
21000	3387	1027	9.08	1096	12.17	1159	15.38	1222	18.62	1279	21.97	1347	25.83	1413	29.90
22000	3548	1076	10.44	1142	13.67	1202	17.03	1263	20.41	1319	23.88	1379	27.66	1444	31.87
23000	3709	1125	11.93	1188	15.30	1246	18.81	1305	22.32	1360	25.92	1411	29.61	1475	33.94
24000	3870	1173	13.56	1235	17.07	1291	20.71	1347	24.38	1400	28.10	1451	31.92	**1507**	**36.14**
25000	4032	1222	15.32	1281	18.97	1336	22.75	1389	26.58	1442	30.43	1491	34.38	**1539**	**38.45**
26000	4193	1271	17.23	1328	21.03	1381	24.94	1432	28.93	1483	32.92	**1532**	**36.99**	**1578**	**41.14**
27000	4354	1320	19.30	1375	23.23	1426	27.29	1475	31.44	**1525**	**35.55**	**1573**	**39.75**	**1618**	**44.03**
28000	4516	1369	21.53	1422	25.60	1472	29.79	**1519**	**34.09**	**1567**	**38.35**	**1614**	**42.68**	**1658**	**47.09**
29000	4677	1418	23.92	1469	28.13	**1518**	**32.46**	**1563**	**36.89**	**1610**	**41.32**	**1655**	**45.78**	**1699**	**50.31**
30000	4838	1467	26.48	**1517**	**30.84**	**1564**	**35.30**	**1608**	**39.87**	**1652**	**44.47**	**1697**	**49.05**	**1740**	**53.72**
31000	5000	**1516**	**29.21**	**1564**	**33.71**	**1610**	**38.32**	**1653**	**43.02**	**1695**	**47.79**	**1739**	**52.51**	**1781**	**57.30**
32000	5161	**1565**	**32.13**	**1612**	**36.77**	**1656**	**41.52**	**1698**	**46.36**	**1739**	**51.28**	**1782**	**56.15**	**1823**	**61.07**
33000	5322	**1613**	**35.24**	**1659**	**40.02**	**1702**	**44.91**	**1744**	**49.88**	**1783**	**54.95**	**1824**	**59.99**	**1865**	**65.04**
34000	5483	**1662**	**38.54**	**1707**	**43.47**	**1749**	**48.49**	**1789**	**53.60**	**18.28**	**58.80**	**1867**	**64.02**	**1907**	**69.20**

NOTE: See pages 28 and 30 for minimum motor frame sizes regardless of BHP.

VOLUME CFM	O.V. FPM	7" SP RPM	7" SP BHP	8" SP RPM	8" SP BHP	9" SP RPM	9" SP BHP	10" SP RPM	10" SP BHP	11" SP RPM	11" SP BHP	12" SP RPM	12" SP BHP	13" SP RPM	13" SP BHP
17000	2741	1350	25.50												
18000	2903	1381	27.58	1438	30.76										
19000	3064	1413	29.79	1469	33.10	**1522**	**36.47**								
20000	3225	1445	32.07	1500	35.59	**1553**	**39.09**	**1604**	**42.63**						
21000	3387	1475	34.07	**1532**	**38.22**	**1585**	**41.86**	**1635**	**45.54**	**1683**	**49.26**				
22000	3548	**1505**	**36.17**	**1563**	**40.58**	**1617**	**44.78**	**1666**	**48.60**	**1714**	**52.45**	**1760**	**56.35**		
23000	3709	**1536**	**38.39**	**1593**	**42.93**	**1648**	**47.57**	**1698**	**51.82**	**1745**	**55.81**	**1791**	**59.84**	**1835**	**63.92**
24000	3870	**1567**	**40.72**	**1624**	**45.40**	**1678**	**50.17**	**1729**	**55.03**	**1777**	**59.34**	**1822**	**63.51**	**1866**	**67.72**
25000	4032	**1598**	**43.17**	**1655**	**47.98**	**1708**	**52.89**	**1759**	**57.88**	**1809**	**62.96**	**1854**	**67.35**	*1897*	*71.69*
26000	4193	**1630**	**45.74**	**1686**	**50.69**	**1739**	**55.73**	**1790**	**60.86**	**1839**	**66.08**	*1886*	*71.37*	*1929*	*75.85*
27000	4354	**1662**	**48.44**	**1717**	**53.53**	**1770**	**58.71**	**1821**	**63.97**	**1869**	**69.32**	*1916*	*74.75*	*1961*	*80.20*
28000	4516	**1701**	**51.57**	**1749**	**56.50**	**1801**	**61.82**	**1852**	**67.22**	*1900*	*72.70*	*1946*	*78.26*	*1991*	*83.90*
29000	4677	**1741**	**54.92**	**1781**	**59.61**	**1833**	**65.07**	*1883*	*70.61*	*1930*	*76.22*	*1977*	*81.92*	*2021*	*87.69*
30000	4838	**1781**	**58.45**	**1821**	**63.25**	**1865**	**68.46**	*1914*	*74.14*	*1962*	*79.89*	*2007*	*85.72*	*2052*	*91.63*
31000	5000	**1822**	**62.16**	**1861**	**67.09**	*1899*	*72.08*	*1946*	*77.82*	*1993*	*83.71*	*2038*	*89.68*	*2082*	*95.72*
32000	5161	**1863**	**66.06**	*1901*	*71.11*	*1939*	*76.24*	*1978*	*81.65*	*2025*	*87.68*	*2070*	*93.78*	*2113*	*99.96*
33000	5322	*1904*	*70.15*	*1942*	*75.34*	*1979*	*80.58*	*2014*	*85.89*	*2057*	*91.81*	*2101*	*98.05*	*2145*	*104.36*
34000	5483	*1946*	*74.45*	*1983*	*79.76*	*2019*	*85.13*	*2054*	*90.57*	*2089*	*96.09*	*2133*	*102.48*	*2176*	*108.93*

VOLUME CFM	O.V. FPM	14" SP RPM	14" SP BHP	15" SP RPM	15" SP BHP	16" SP RPM	16" SP BHP	17" SP RPM	17" SP BHP	18" SP RPM	18" SP BHP	19" SP RPM	19" SP BHP
24000	3870	*1908*	*71.96*										
25000	4032	*1939*	*76.07*	*1980*	*80.49*	*2020*	*84.94*						
26000	4193	*1971*	*80.37*	*2011*	*84.92*	*2050*	*89.50*	*2089*	*94.13*				
27000	4354	*2002*	*84.85*	*2042*	*89.54*	*2082*	*94.26*	*2120*	*99.02*	*2157*	*103.81*		
28000	4516	*2034*	*89.53*	*2074*	*94.36*	*2113*	*99.22*	*2151*	*104.11*	*2188*	*109.04*	*2224*	*113.99*
29000	4677	*2064*	*93.54*	*2106*	*99.38*	*2145*	*104.38*	*2182*	*109.41*	*2219*	*114.47*	*2255*	*119.56*
30000	4838	*2095*	*97.61*	*2136*	*103.66*	*2177*	*109.75*	*2214*	*114.92*	*2251*	*120.12*	*2286*	*125.35*
31000	5000	*2125*	*101.83*	*2166*	*108.02*	*2207*	*114.27*	*2246*	*120.60*	*2283*	*125.99*		
32000	5161	*2156*	*106.21*	*2197*	*112.53*	*2237*	*118.92*	*2276*	*125.38*				
33000	5322	*2187*	*110.75*	*2228*	*117.20*	*2267*	*123.73*						
34000	5483	*2218*	*115.45*	*2259*	*122.04*	*2298*	*128.70*						

NOTE: HDBI-330 HAS A FIXED HOUSING AND IS THEREFORE NOT ROTATABLE IN THE FIELD.

Performance certified is for installation type B - Free inlet, Ducted Outlet. Performance ratings do not include the effects of appurtenances (accessories). Power rating (BHP) does not include transmission losses.

HDBI-360

BELT DRIVE RATING TABLES
Ratings at 70˚F., .075 Density, Sea Level

WHEEL
Dia. -36.00"

OUTLET O.D.
Size - 27.25" x 40.25"
Area - 7.50 Sq. Ft. I.D.

INLET O.D.
Size - 40"
Area - 8.10 Sq.Ft. I.D.

All wheels are HDBI type
Class II = light face above Class III
Class III = bold face
Class IV = italic face below Class III

SEE PAGE 24 FOR MAX. WHEEL RPM & WR².

VOLUME CFM	O.V. FPM	0" SP RPM	0" SP BHP	1" SP RPM	1" SP BHP	2" SP RPM	2" SP BHP	3" SP RPM	3" SP BHP	4" SP RPM	4" SP BHP	5" SP RPM	5" SP BHP	6" SP RPM	6" SP BHP
24000	3200	904	9.57	969	13.11	1030	16.78	1089	20.51	1143	24.37	1201	28.32	1254	32.38
25000	3333	941	10.82	1005	14.50	1063	18.32	1120	22.18	1173	26.16	1228	30.25	1281	34.43
26000	3466	979	12.17	1040	15.99	1096	19.96	1152	23.95	1204	28.06	1255	32.28	1307	36.58
27000	3600	1017	13.63	1076	17.59	1130	21.71	1184	25.83	1235	30.07	1283	34.42	1335	38.85
28000	3733	1054	15.20	1112	19.30	1164	23.55	1216	27.84	1266	32.20	1313	36.67	1362	41.24
29000	3866	1092	16.89	1148	21.13	1198	25.52	1249	29.95	1298	34.45	1343	39.04	**1389**	**43.74**
30000	4000	1130	18.69	1184	23.08	1233	27.61	1281	32.20	1329	36.82	1375	41.54	**1417**	**46.37**
31000	4133	1167	20.63	1220	25.15	1268	29.82	1314	34.57	1361	39.32	**1406**	**44.17**	**1448**	**49.12**
32000	4266	1205	22.69	1256	27.35	1303	32.16	1347	37.07	**1394**	**41.95**	**1437**	**46.93**	**1479**	**52.01**
33000	4400	1243	24.88	1292	29.69	1338	34.63	**1381**	**39.70**	**1426**	**44.72**	**1469**	**49.83**	**1510**	**55.03**
34000	4533	1280	27.21	1328	32.16	1373	37.24	**1415**	**42.44**	**1459**	**47.63**	**1501**	**52.87**	**1541**	**58.20**
35000	4666	1318	29.68	1365	34.77	**1408**	**39.99**	**1450**	**45.33**	**1491**	**50.69**	**1533**	**56.05**	**1573**	**61.51**
36000	4800	1356	32.30	**1401**	**37.53**	**1444**	**42.89**	**1484**	**48.36**	**1524**	**53.89**	**1565**	**59.39**	**1605**	**64.97**
37000	4933	**1393**	**35.07**	**1438**	**40.44**	**1479**	**45.94**	**1519**	**51.55**	**1557**	**57.24**	**1598**	**62.87**	**1636**	**68.59**
38000	5066	**1431**	**37.99**	**1474**	**43.50**	**1515**	**49.14**	**1554**	**54.89**	**1591**	**60.74**	**1630**	**66.52**	**1668**	**72.36**
39000	5200	**1469**	**41.07**	**1511**	**46.73**	**1551**	**52.50**	**1589**	**58.39**	**1625**	**64.37**	**1663**	**70.32**	**1701**	**76.30**
40000	5333	**1506**	**44.31**	**1548**	**50.11**	**1587**	**56.02**	**1624**	**62.04**	**1660**	**68.17**	**1696**	**74.29**	**1733**	**80.40**
41000	5466	**1544**	**47.72**	**1584**	**53.65**	**1623**	**59.72**	**1659**	**65.87**	**1694**	**72.13**	**1729**	**78.43**	*1766*	*84.67*

NOTE: See pages 28 and 30 for minimum motor frame sizes regardless of BHP.

VOLUME CFM	O.V. FPM	7" SP RPM	7" SP BHP	8" SP RPM	8" SP BHP	9" SP RPM	9" SP BHP	10" SP RPM	10" SP BHP	11" SP RPM	11" SP BHP	12" SP RPM	12" SP BHP	13" SP RPM	13" SP BHP
24000	3200	1308	36.67	1366	41.34	**1420**	**46.11**	**1472**	**50.98**						
25000	3333	1330	38.70	**1385**	**43.40**	**1440**	**48.31**	**1491**	**53.30**	**1541**	**58.38**				
26000	3466	1357	40.98	**1405**	**45.55**	**1459**	**50.58**	**1511**	**55.71**	**1560**	**60.92**	**1607**	**66.22**		
27000	3600	**1383**	**43.38**	**1429**	**47.98**	**1479**	**52.94**	**1530**	**58.20**	**1579**	**63.55**	**1626**	**68.98**	**1672**	**74.49**
28000	3733	**1410**	**45.89**	**1456**	**50.62**	**1499**	**55.43**	**1550**	**60.79**	**1599**	**66.26**	**1646**	**71.82**	**1691**	**77.46**
29000	3866	**1437**	**48.52**	**1482**	**53.38**	**1526**	**58.31**	**1570**	**63.47**	**1618**	**69.08**	**1665**	**74.77**	**1710**	**80.54**
30000	4000	**1464**	**51.28**	**1509**	**56.26**	**1552**	**61.32**	**1593**	**66.45**	**1638**	**71.98**	**1685**	**77.81**	**1729**	**83.71**
31000	4133	**1492**	**54.16**	**1536**	**59.27**	**1579**	**64.46**	**1619**	**69.72**	**1659**	**75.05**	**1704**	**80.95**	*1749*	*86.98*
32000	4266	**1519**	**57.17**	**1563**	**62.42**	**1606**	**67.73**	**1646**	**73.12**	**1685**	**78.57**	**1724**	**84.19**	*1769*	*90.36*
33000	4400	**1549**	**60.32**	**1591**	**65.70**	**1633**	**71.14**	**1673**	**76.66**	**1711**	**82.24**	*1749*	*87.88*	*1788*	*93.84*
34000	4533	**1580**	**63.62**	**1619**	**69.12**	**1660**	**74.69**	**1700**	**80.33**	*1738*	*86.04*	*1775*	*91.81*	*1811*	*97.65*
35000	4666	**1611**	**67.05**	**1648**	**72.68**	**1687**	**78.39**	**1727**	**84.16**	*1765*	*89.99*	*1802*	*95.89*	*1837*	*101.85*
36000	4800	**1642**	**70.64**	**1678**	**76.40**	**1715**	**82.23**	*1754*	*88.13*	*1792*	*94.09*	*1828*	*100.12*	*1864*	*106.20*
37000	4933	**1673**	**74.39**	**1709**	**80.27**	*1744*	*86.23*	*1782*	*92.26*	*1819*	*98.35*	*1855*	*104.50*	*1890*	*110.71*
38000	5066	**1705**	**78.29**	*1740*	*84.29*	*1774*	*90.38*	*1809*	*96.54*	*1846*	*102.76*	*1882*	*109.04*	*1917*	*115.38*
39000	5200	*1737*	*82.35*	*1772*	*88.49*	*1805*	*94.70*	*1838*	*100.98*	*1874*	*107.34*	*1910*	*113.75*	*1944*	*120.22*
40000	5333	*1769*	*86.58*	*1803*	*92.84*	*1836*	*99.18*	*1869*	*105.59*	*1902*	*112.08*	*1937*	*118.62*	*1971*	*125.22*
41000	5466	*1801*	*90.99*	*1835*	*97.38*	*1868*	*103.84*	*1900*	*110.37*	*1931*	*116.98*	*1965*	*123.66*	*1999*	*130.39*

VOLUME CFM	O.V. FPM	14" SP RPM	14" SP BHP	15" SP RPM	15" SP BHP	16" SP RPM	16" SP BHP	17" SP RPM	17" SP BHP
28000	3733	**1734**	**83.18**						
29000	3866	*1754*	*86.39*	*1796*	*92.31*				
30000	4000	*1773*	*89.69*	*1815*	*95.74*	*1855*	*101.87*		
31000	4133	*1792*	*93.09*	*1834*	*99.28*	*1875*	*105.54*	*1914*	*111.86*
32000	4266	*1812*	*96.60*	*1853*	*102.92*	*1894*	*109.30*	*1933*	*115.76*
33000	4400	*1831*	*100.22*	*1873*	*106.66*	*1913*	*113.18*	*1952*	*119.77*
34000	4533	*1851*	*103.94*	*1892*	*110.52*	*1933*	*117.17*	*1972*	*123.89*
35000	4666	*1872*	*107.87*	*1912*	*114.49*	*1952*	*121.28*	*1991*	*128.13*
36000	4800	*1898*	*112.36*	*1932*	*118.58*	*1972*	*125.50*	*2011*	*132.48*

NOTE:
HDBI-360 HAS A FIXED HOUSING AND IS THEREFORE NOT ROTATABLE IN THE FIELD.

Performance certified is for installation type B - Free inlet, Ducted Outlet. Performance ratings do not include the effects of appurtenances (accessories). Power rating (BHP) does not include transmission losses.

DESIGN SPECIFICATIONS

Maximum Shaft and Bearing Speeds for Belt Driven Fans
Maximum Wheel Speeds & WR² (Lb.-Ft.²) for Direct Driven Fans

FAN SIZE	Maximum Shaft and Bearing Speeds			HDBI Steel Wheels ①						SQBI Steel Wheels ①				Aluminum Wheels ②	
				CLASS II		CLASS III		CLASS IV		CLASS II		CLASS III			
	CLASS II	CLASS III	CLASS IV	WHEEL WR^2	MAX. RPM	WHEEL WR^2	MAX. RPM	WHEEL WR^2	MAX. RPM	WHEEL WR^2	MAX. RPM	WHEEL WR^2	MAX. RPM	WHEEL WR^2	MAX. RPM
120	4189	4985	–	2.8	4380	2.8	5400	–	–	3.9	4065	4.1	5000	1.2	5400
130	3834	4738	4999	4.2	3900	–	–	4.2	4999	5.3	3750	5.7	4700	1.7	4999
150	3513	4357	4712	5.9	3513	–	–	5.9	4712	8.1	3050	8.3	4117	2.5	4712
160	3195	3961	4285	9.0	3195	–	–	9.9	4285	11.7	3042	12.4	3724	4.2	4285
180	2903	3591	3885	13.9	2903	–	–	15.0	3885	16.2	2593	17.1	3600	6.7	3885
200	2661	3285	3574	19.0	2661	–	–	20.8	3574	24.6	2380	26.5	3550	9.8	3574
220	2304	2824	3447	26.1	2304	–	–	29.1	3550	36.3	2115	39.6	3160	14.7	3550
240	2132	2565	2837	54.6	2132	–	–	58.2	2837	–	–	63.3	2740	26.5	2837
270	1854	2262	2476	–	–	–	–	89.9	2476	–	–	108.3	2493	45.9	2476
300	1680	2075	2300	–	–	–	–	130.2	2300	–	–	165.0	2243	64.3	2300
330	1500	1880	2300	–	–	–	–	193.6	2300	–	–	244.2	1935	130.0	2300
360	1380	1735	1950	–	–	–	–	255.8	1950	–	–	349.6	1750	176.0	1950

① For steel wheels up to 175˚F. (80°C.)
② For aluminum wheels up to 200˚F. (93°C.) All aluminum wheels are HDBI type, Class IV construction.

Approximate Shipping Weights Less Motor

SIZE	ARR#1			ARR#4			ARR#8			ARR#9			ARR#9CB			ARR#10		
	CL.II	CL.III	CL.IV	CL.II	CL.III	CL.IV	CL.II	CL.III	CL.IV	CL.II	CL.III	CL.IV	CL.II	CL.III	CL.IV	CL.II	CL.III	CL.IV
120	160	165	170	120	125	130	180	185	190	190	195	200	260	265	270	180	185	190
130	190	195	200	150	155	160	210	215	220	210	215	220	300	305	310	200	205	210
150	220	230	240	170	180	190	250	260	270	250	260	270	340	350	360	250	260	270
160	270	280	290	230	240	255	290	310	320	300	310	320	390	400	410	300	310	320
180	350	360	370	300	310	325	380	390	400	380	390	400	500	510	520	390	400	410
200	390	410	420	350	360	380	430	450	460	430	450	460	560	580	590	430	450	460
220	470	500	510	430	440	460	520	540	550	530	550	560	660	680	690	530	550	560
240	610	620	630	550	555	560	670	690	700	660	670	680	800	810	820	620	630	640
270	740	750	760	690	695	700	820	840	850	800	810	820	960	970	980	760	770	780
300	910	945	950	840	845	850	1000	1000	1040	970	1005	1010	1130	1165	1170	900	930	940
330	1200	1320	1510	1090	1090	1176	–	–	–	1260	1380	1570	1420	1560	1760	–	–	–
360	1410	1600	1720	1390	1430	1430	–	–	–	1470	1660	1780	1650	1840	1910	–	–	–

DIMENSIONS and SPECIFICATIONS

NOTE: The table below contains blower housing dimensions common to all arrangements on pages 25 and 27 through 29.

MODEL	C①	D②	J	M	O	P	R	S	AA	DD③
HDBI-120	4 1/16	9 3/8	5 3/4	6 3/16	9 15/16	12 3/8	13	10 3/8	13 1/4	13 3/4
HDBI-130	4 1/16	10 3/8	6 1/4	6 13/16	10 13/16	13 3/4	14 7/16	11 9/16	14 5/8	15 1/4
HDBI-150	4 1/16	11 3/8	6 3/4	7 9/16	11 3/4	15 3/16	15 15/16	12 3/4	16 1/8	16 13/16
HDBI-160	4 1/16	12 1/2	7 5/16	8 5/16	12 11/16	16 11/16	17 1/2	14	18	18 7/16
HDBI-180	4 1/16	13 7/8	8	9 1/4	13 13/16	18 7/16	19 7/16	15 1/2	20	20 3/8
HDBI-200	4 1/16	15 1/4	8 11/16	10 1/16	14 15/16	20 1/4	21 1/4	17	22	22 3/8
HDBI-220	4 1/16	16 7/8	9 1/2	11 3/16	16 3/8	22 1/2	23 5/8	18 7/8	24 5/8	24 7/8
HDBI-240	6 1/16	18 9/16	10 3/8	12 5/16	18 13/16	24 3/4	26	20 3/4	27	27 3/8
HDBI-270	6 1/16	20 7/16	11 5/16	13 9/16	20 5/8	27 1/4	28 5/8	22 7/8	30	30 1/16
HDBI-300	6 1/16	22 3/4	12 7/16	15 1/8	22 5/8	30 3/8	31 7/8	25 1/2	33 1/2	33 9/16
★ HDBI-330	3 1/4	24 7/8	14 1/2	16 9/16	24 11/16	33 3/8	35	28	36 3/4	36 7/8
★ HDBI-360	3 1/4	27 1/4	15 11/16	18 1/8	27 3/16	36 1/2	38 1/4	30 1/2	40	40 1/4

① Add 1/8" for AMCA "C" Construction fans and/or Downblast discharge position.
② Dimensions shown are for 100% width housings. For partial width housings, contact your local Cincinnati Fan sales representative.
③ Discharge flange is standard on Models HDBI-270 through HDBI-360. See page 31 for dimension.
★ HDBI-330 & 360 have fixed housings and are therefore not rotatable in the field.

DIMENSIONS and SPECIFICATIONS

Arrangement #4, Direct Drive

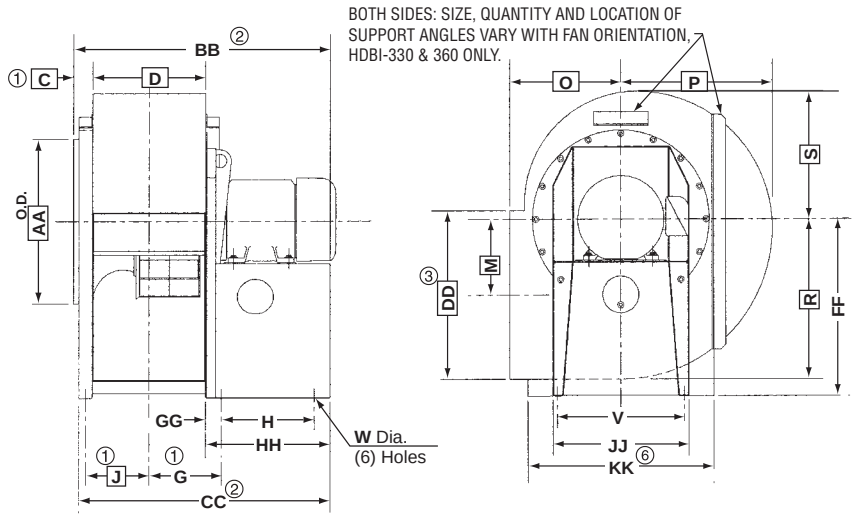

For horizontal mount (arrangement 4HM), see Page 26.

CW-BH
(Clockwise-Bottom Horizontal)

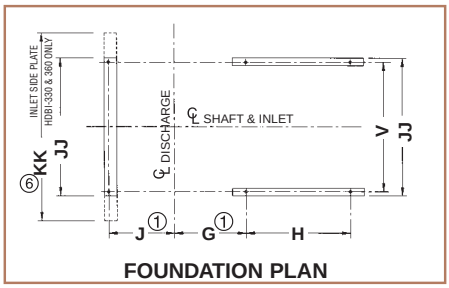

FOUNDATION PLAN

① Add 1/8" for AMCA "C" Construction fans and/or Downblast discharge position.

② Add 1/4" for AMCA "C" Construction fans and/or Downblast discharge position.

③ Discharge flange (not shown above) is standard on Models HDBI-270 through HDBI-360. See page 31 for dimensions.

⑥ Inlet side plate width for HDBI-330 & 360. Inlet side plate for HDBI-120 to HDBI-300 is same width as "JJ" dimension.

NOTE: HDBI-120 to 300 are reversible and rotatable in 45° increments but wheels are not reversible. **HDBI-330 AND 360 ARE NOT ROTATABLE OR REVERSIBLE.**

NOTE: For common boxed blower housing dimensions, see Page 24.

DIMENSIONS IN INCHES ± 1/8"

MODEL NO.	MOTOR FRAME	G①	H	V	W	BB②	CC②	FF	GG	HH	JJ	KK⑥
HDBI-120	143T-184T	7 11/16	5 1/2	14	9/16	24 15/16	22 15/16	15 1/2	3	11 1/2	16	—
HDBI-130	143T-215T	8 3/16	7 5/8	15 3/4	9/16	28 1/16	26 1/16	16 5/8	3	13 5/8	17 3/4	—
HDBI-150	143T-215T	8 11/16	7 5/8	17 1/4	9/16	29 1/16	27 1/16	18 1/8	3	13 5/8	19 1/4	—
	254T-256T		16			37 7/16	35 7/16			22		
HDBI-160	143T-184T	9 1/4	7 5/8	19 1/8	9/16	30 3/16	28 3/16	19 3/4	3	13 5/8	21 1/8	—
	213T-256T		17			39 9/16	37 9/16			23		
HDBI-180	143T-215T	9 15/16	8 3/8	21 1/2	9/16	32 5/16	30 5/16	22 3/4	3	14 3/8	23 1/2	—
	254T-286T		18 1/2			42 7/16	40 7/16			24 1/2		
	324T-326T		21			44 15/16	42 15/16			27		
HDBI-200	182T-256T	10 5/8	11 1/2	23 1/2	9/16	36 13/16	34 13/16	23 1/2	3	17 1/2	25 1/2	—
	284T-286T		18 1/2			43 13/16	41 13/16			24 1/2		
	324T-326T		21			46 5/16	44 5/16			27		
HDBI-220	182T-256T	11 7/16	11 1/2	26 1/8	9/16	38 7/16	36 7/16	26 1/4	3	17 1/2	28 1/8	—
	284T-326T		21			47 15/16	45 15/16			27		
HDBI-240	213T-256T	12 5/16	11 1/2	28 1/4	9/16	42 1/8	38 1/8	28 1/2	3	17 1/2	30 3/4	—
	284T-326T		21			51 5/8	47 5/8			27		
HDBI-270	213T-256T	13 1/4	11 1/2	31	9/16	44	40	31 1/4	3	17 1/2	33 3/4	—
	284T-326T		21			53 1/2	49 1/2			27		
HDBI-300	213T-256T	14 3/8	11 1/2	34 1/4	9/16	46 5/16	42 5/16	34 1/2	3	17 1/2	37 1/4	—
	284T-326T		21			55 13/16	51 13/16			27		
HDBI-330	284T-326T	15 15/16	20	28	3/4	55 1/8	54 15/16	38 3/4	3 1/2	27	30	41 3/4
	364T-405T		25			60 1/8	59 15/16			32		
	444T		29			64 1/8	63 15/16			36		
HDBI-360	284T-326T	17 1/8	20	31	3/4	57 1/2	57 5/16	42	3 1/2	27	33	45
	364T-405T		25			62 1/2	62 5/16			32		
	444T		29			66 1/2	66 5/16			36		

DIMENSIONS SUBJECT TO CHANGE WITHOUT NOTICE.

DIMENSIONS and SPECIFICATIONS

Arrangement #4HM, Direct Drive

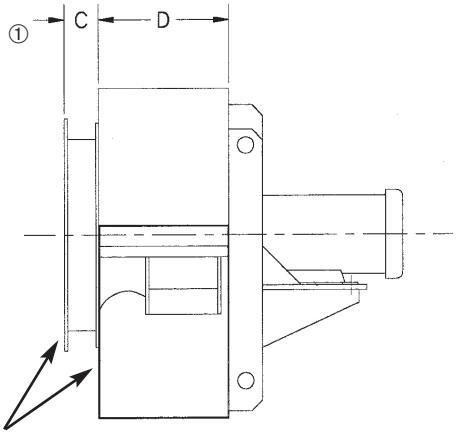

See Notes 2 and 3

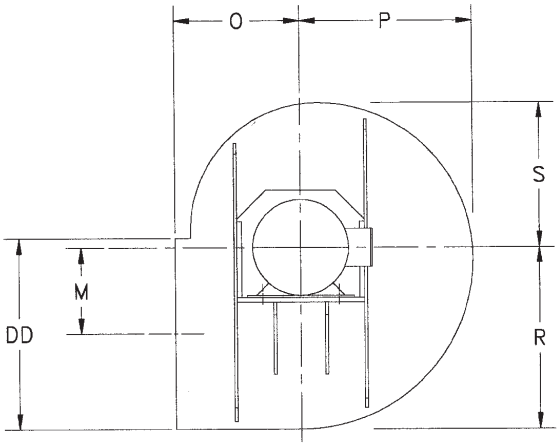

NOTE: Dimensions shown below are for 100% width housings. For partial width housings, contact your local Cincinnati Fan sales representative.

① Add 1/8" for AMCA "C" Construction.

② Optional inlet flange may be added to assist in fan installation. See page 31 for flange dimensions.

③ Discharge flange is optional on Models HDBI-120 through HDBI-240 and is standard on Models HDBI-270 and HDBI-300. See page 31 for flange dimensions.

DIMENSIONS IN INCHES ± 1/8"

MODEL NO.	MOTOR FRAME	① C	D	M	O	P	R	S	③ DD	SHIP WT. LESS MOTOR
HDBI-120	143T-184T	4 1/4	9 3/8	6 3/16	9 15/16	12 3/8	13	10 3/8	13 3/4	150
HDBI-130	143T-215T	4 1/4	10 3/8	6 13/16	10 13/16	13 3/4	14 7/16	11 9/16	15 1/4	170
HDBI-150	143T-215T	4 1/4	11 3/8	7 9/16	11 3/4	15 3/16	15 15/16	12 3/4	16 13/16	190
HDBI-160	143T-256T	4 1/4	12 1/2	8 5/16	12 11/16	16 11/16	17 1/2	14	18 7/16	210
HDBI-180	143T-326T	4 1/4	13 7/8	9 1/4	13 13/16	18 7/16	19 7/16	15 1/2	20 3/8	270
HDBI-200	182T-326T	4 1/4	15 1/4	10 1/16	14 15/16	20 1/4	21 1/4	17	22 3/8	320
HDBI-220	182T-326T	4 1/4	16 7/8	11 3/16	16 3/8	22 1/2	23 5/8	18 7/8	24 7/8	390
HDBI-240	213T-326T	6 1/4	18 9/16	12 5/16	18 13/16	24 3/4	26	20 3/4	27 3/8	450
HDBI-270	213T-326T	6 1/4	20 7/16	13 9/16	20 5/8	27 1/4	28 5/8	22 7/8	30 1/16	550
HDBI-300	213T-326T	6 1/4	22 3/4	15 1/8	22 5/8	30 3/8	31 7/8	25 1/2	33 9/16	640
HDBI-330	284T-365T	6 1/8	24 7/8	16 9/16	24 11/16	33 3/8	35	28	36 7/8	940
HDBI-360	284T-365T	6 1/8	27 1/4	18 1/8	27 3/16	36 1/2	38 1/4	30 1/2	40 1/4	1100

DIMENSIONS SUBJECT TO CHANGE WITHOUT NOTICE.

16 DISCHARGE POSITIONS AVAILABLE. 45° DISCHARGE POSITIONS NOT SHOWN.*
Discharges shown are determined by viewing fan from motor or drive side.

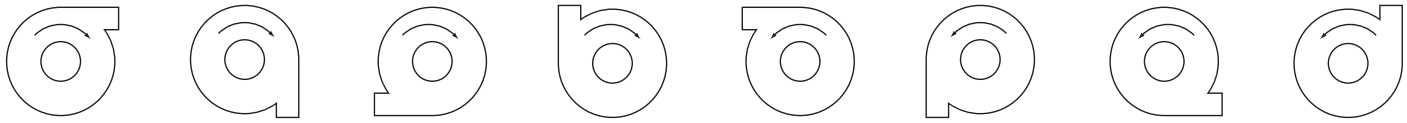

CW-TH Clockwise Top Horizontal Discharge

CW-DB Clockwise Down-Blast Discharge ★

CW-BH Clockwise Bottom Horizontal Discharge

CW-UB Clockwise Up-Blast Discharge

CCW-TH Counter-Clockwise Top Horizontal Discharge

CCW-DB Counter-Clockwise Down-Blast Discharge ★

CCW-BH Counter-Clockwise Bottom Horizontal Discharge

CCW-UB Counter-Clockwise Up-Blast Discharge

★ Not available on models HDBI-270 through HDBI-360 or any other models with discharge flange option without special discharge extension. For arrangement 9CB units, contact your local Cincinnati Fan sales representative.

* See (*) on page 31.

DIMENSIONS and SPECIFICATIONS

Arrangement #1 and #9, Belt Drive (specify 9R or 9L.)

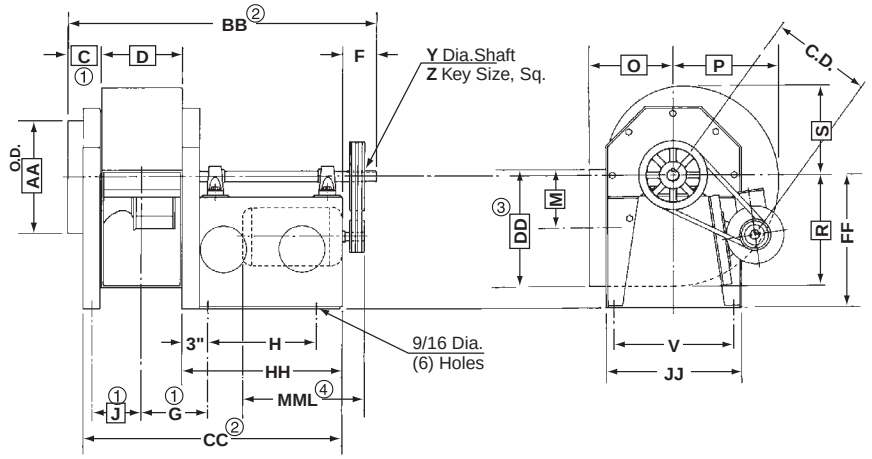

For channel base dimensions, see page 30.

Unit shown is arrangement 9R (motor on right side). For motor on left side, specify arrangement 9L.

CW-BH
(Clockwise-Bottom Horizontal)

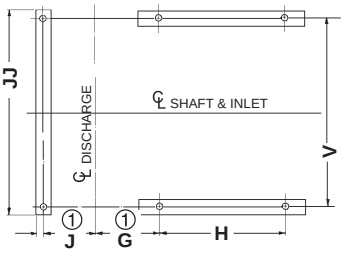

FOUNDATION PLAN

① Add 1/8" for AMCA "C" Construction fans and/or Downblast discharge position.

② Add 1/4" for AMCA "C" Construction fans and/or Downblast discharge position.

③ Discharge flange (not shown above) is standard on Models HDBI-270 and HDBI-300. See page 31 for dimensions.

④ MML IS MAXIMUM MOTOR LENGTH ON CUSTOMER SUPPLIED MOTOR. MOTOR MANUFACTURERS "C" DIMENSION CANNOT EXCEED "MML" WITHOUT A SPECIAL BASE.

NOTE: Housings are reversible and rotatable in 45° increments. Wheels are not reversible.

DIMENSIONS IN INCHES ± 1/8"

NOTE: For common boxed blower housing dimensions, see Page 24

MODEL NO.	MOTOR FRAME	F	① G	H	V	Y CL.II	Y CL.III	Y CL.IV	Z CL.II	Z CL.III	Z CL.IV	② BB	② CC	FF	HH	JJ	④ MML
HDBI-120	56-215T	4	7 11/16	12 3/4	14	1 3/16	1 3/16	—	1/4	1/4	—	36 3/16	30 3/16	15 1/2	18 3/4	16	19 3/8
HDBI-130	56-256T	4	8 3/16	17	15 3/4	1 3/16	1 7/16	1 7/16	1/4	3/8	3/8	41 7/16	35 7/16	16 5/8	23	17 3/4	24 1/4
HDBI-150	56-256T	4	8 11/16	17	17 1/4	1 7/16	1 11/16	1 11/16	3/8	3/8	3/8	42 7/16	36 7/16	18 1/8	23	19 1/4	24 1/4
HDBI-160	56-256T	4	9 1/4	17	19 1/8	1 7/16	1 11/16	1 15/16	3/8	3/8	1/2	43 9/16	37 9/16	19 3/4	23	21 1/8	24 1/4
HDBI-180	145T-286T	4	9 15/16	18 1/2	21 1/2	1 7/16	1 11/16	1 15/16	3/8	3/8	1/2	46 7/16	40 7/16	22 3/4	24 1/2	23 1/2	26 3/8
HDBI-200	145T-286T	4	10 5/8	18 1/2	23 1/2	1 7/16	1 15/16	2 3/16	3/8	1/2	1/2	47 13/16	41 13/16	23 1/2	24 1/2	25 1/2	26 3/8
HDBI-220	145T-324T	5	11 7/16	21	26 1/8	1 7/16	1 15/16	2 3/16	3/8	1/2	1/2	52 15/16	45 15/16	26 1/4	27	28 1/8	29 1/2
HDBI-240	145T-324T	6	12 5/16	21	28 1/4	1 11/16	2 3/16	2 3/16	3/8	1/2	1/2	57 5/8	47 5/8	28 1/2	27	30 3/4	29 1/2
HDBI-270	182T-324T	6	13 1/4	21	31	1 11/16	2 3/16	2 7/16	3/8	1/2	5/8	59 1/2	49 1/2	31 1/4	27	33 3/4	29 1/2
HDBI-300	182T-364T	6	14 3/8	24 3/4	34 1/4	1 15/16	2 7/16	2 7/16	1/2	5/8	5/8	65 9/16	55 9/16	34 1/2	30 3/4	37 1/4	33 1/4

FOR HDBI-330 & 360 DIMENSIONS, SEE PAGE 28.

DIMENSIONS SUBJECT TO CHANGE WITHOUT NOTICE.

C.D. BELT CENTER DISTANCE

DIMENSIONS IN INCHES

MODEL	56-145T MIN.	56-145T MAX.	182T-184T MIN.	182T-184T MAX.	213T-215T MIN.	213T-215T MAX.	254T-256T MIN.	254T-256T MAX.	284T-286T MIN.	284T-286T MAX.	324T-326T MIN.	324T-326T MAX.	364T MIN.	364T MAX.
HDBI-120	11 3/16	12 3/4	12 1/8	13 1/2	12 5/16	13 11/16								
HDBI-130	11 1/8	12 11/16	12 13/16	14 3/8	13 1/8	14 11/16	13 7/16	14 13/16						
HDBI-150	11 5/8	13 3/16	13 7/16	14 15/16	13 7/8	15 5/8	14 5/16	16						
HDBI-160	12 3/16	13 11/16	14	15 1/2	15 1/8	17 3/16	15 11/16	17 5/8						
HDBI-180	12 7/8	14 3/8	14 9/16	16 1/16	15 13/16	17 11/16	17 1/2	19 11/16	17 13/16	19 3/16				
HDBI-200	12 5/8	14 1/4	14 1/4	15 7/8	15 5/8	17 1/2	17 1/4	19 9/16	18 1/8	20 13/16				
HDBI-220	13 9/16	15 1/16	15 3/16	16 5/8	16 7/16	18 3/16	18 1/8	20 1/4	19 1/4	21 3/4	20 3/4	22 9/16		
HDBI-240	13 11/16	15 3/16	15 7/16	16 15/16	16 11/16	18 9/16	18 1/2	20 11/16	19 7/16	22	21 5/16	24 3/8		
HDBI-270			16	17 1/2	17 5/16	19 3/16	19	21 1/4	20 1/16	22 11/16	21 15/16	25 1/16		
HDBI-300			15 15/16	17 5/16	17 15/16	19 3/4	19 9/16	21 11/16	20 5/8	23 1/8	22 7/16	25 1/2	23 15/16	27 3/8

DIMENSIONS and SPECIFICATIONS

HDBI-330 & 360, Arrangement #1 and #9, Belt Drive (specify 9R or 9L)

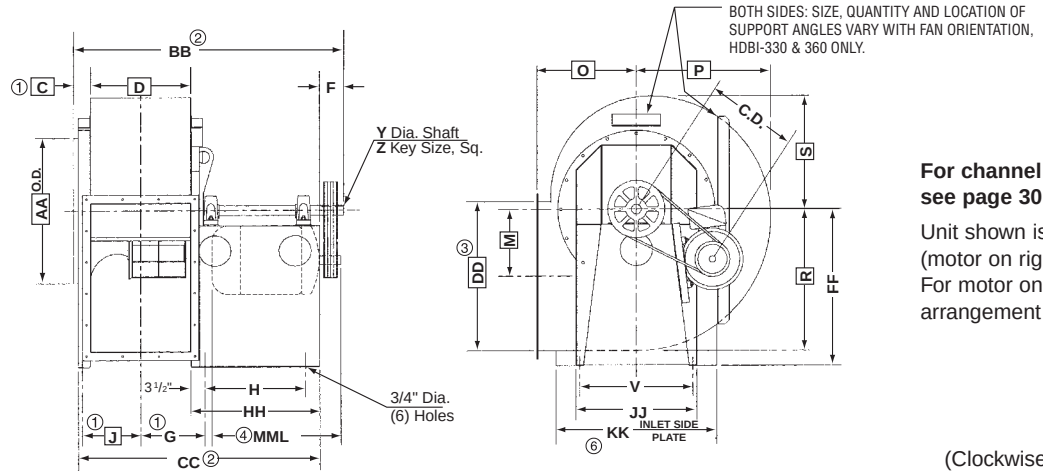

For channel base dimensions, see page 30.

Unit shown is arrangement 9R (motor on right side).
For motor on left side, specify arrangement 9L.

CW-BH
(Clockwise-Bottom Horizontal)

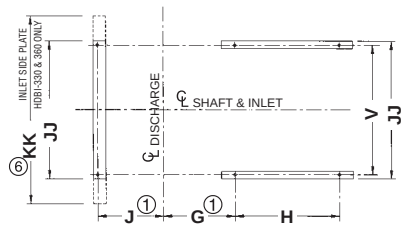

FOUNDATION PLAN

NOTE: HDBI-330 AND 360 are not rotatable or reversible.

① Add 1/8" for AMCA "C" Construction fans and/or Downblast discharge position.

② Add 1/4" for AMCA "C" Construction fans and/or Downblast discharge position.

③ Discharge flange is standard on Models HDBI-330 and HDBI-360. See page 31 for dimensions.

④ MML IS MAXIMUM MOTOR LENGTH ON CUSTOMER SUPPLIED MOTOR. MOTOR MANUFACTURERS "C" DIMENSION CANNOT EXCEED "MML" WITHOUT A SPECIAL BASE.

⑥ Inlet side plate width for HDBI-330 & 360.

DIMENSIONS IN INCHES ± 1/8"

DIMENSIONS SUBJECT TO CHANGE WITHOUT NOTICE.

MODEL	MOTOR FRAME	F	① G	H	V	Y CL.II	Y CL.III	Y CL.IV	Z CL.II	Z CL.III	Z CL.IV	② BB	② CC	FF	HH	JJ	⑥ KK	④ MML
HDBI-330	182T-365T	6	15 15/16	25	28	2 3/16	2 7/16	2 11/16	1/2	5/8	5/8	66 1/8	59 15/16	38 3/4	32	30	41 3/4	33
HDBI-360	182T-365T	6	17 1/8	25	31	2 7/16	2 11/16	2 15/16	5/8	5/8	3/4	68 1/2	62 5/16	42	32	33	45	33

Note: For common boxed blower housing dimensions, see Page 24.

C.D. BELT CENTER DISTANCE

MOTOR FRAME	CLASS II & III MIN.	CLASS II & III MAX.	CLASS IV MIN.	CLASS IV MAX.
182T-184T	17 9/16	18 5/8	17 7/8	19 3/16
213T-215T	18 7/8	20 5/16	19 3/16	20 7/8
254T-256T	20 9/16	22 5/16	21 1/16	22 7/8
184T-286T	21 9/16	23 11/16	22 1/8	24 5/16
324T-326T	23 1/2	26 1/16	24	26 11/16
364T-365T	24 15/16	28	25 3/8	28 5/8

16 DISCHARGE POSITIONS AVAILABLE. 45° DISCHARGE POSITIONS NOT SHOWN.*
Discharges shown are determined by viewing fan from motor or drive side.

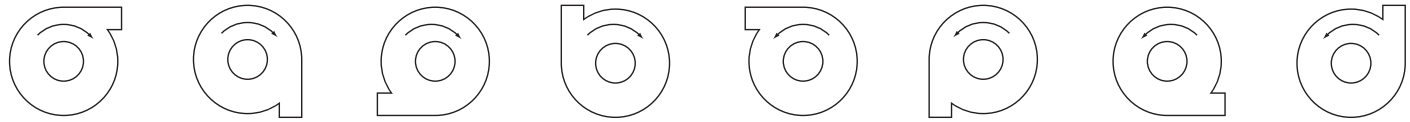

CW-TH Clockwise Top Horizontal Discharge

CW-DB Clockwise Down-Blast Discharge ★

CW-BH Clockwise Bottom Horizontal Discharge

CW-UB Clockwise Up-Blast Discharge

CCW-TH Counter-Clockwise Top Horizontal Discharge

CCW-DB Counter-Clockwise Down-Blast Discharge ★

CCW-BH Counter-Clockwise Bottom Horizontal Discharge

CCW-UB Counter-Clockwise Up-Blast Discharge

★ Not available on models HDBI-270 through HDBI-360 or any other models with discharge flange option without special discharge extension. For arrangement 9CB units, contact your local Cincinnati Fan sales representative.

* See (*) on page 31.

DIMENSIONS and SPECIFICATIONS

Arrangement #10, Belt Drive

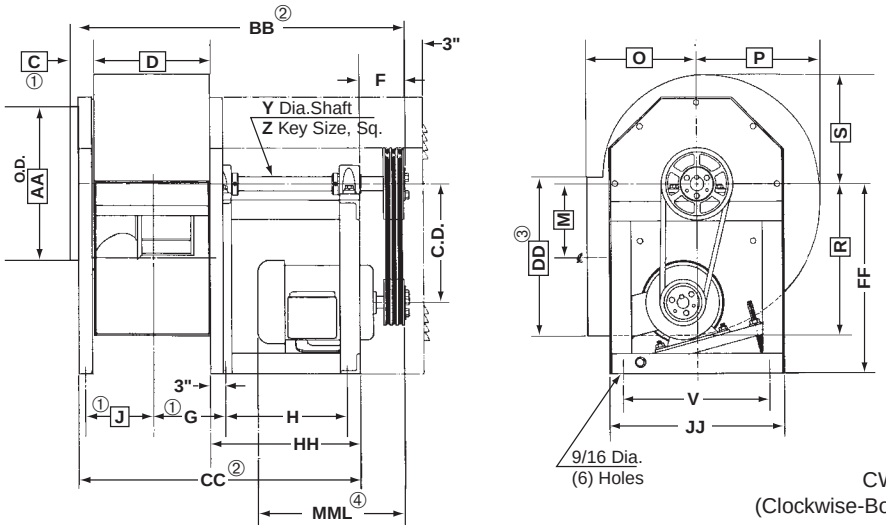

CW-BH
(Clockwise-Bottom Horizontal)

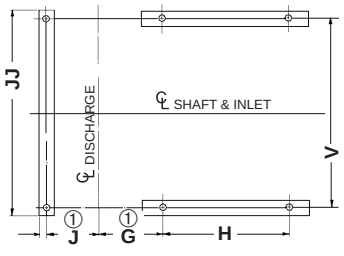

FOUNDATION PLAN

① Add 1/8" for AMCA "C" Construction fans and/or Downblast discharge position.

② Add 1/4" for AMCA "C" Construction fans and/or Downblast discharge position.

③ Discharge flange (not shown above) is standard on Models HDBI-270 and HDBI-300. See page 31 for dimensions.

④ MML IS MAXIMUM MOTOR LENGTH ON CUSTOMER SUPPLIED MOTOR. MOTOR MANUFACTURERS "C" DIMENSION CANNOT EXCEED "MML" WITHOUT A SPECIAL BASE.

NOTE: Housings are reversible and rotatable in 45° increments. Wheels are not reversible.

DIMENSIONS IN INCHES ± 1/8"

NOTE: For common boxed blower housing dimensions, see Page 24.

MODEL NO.	MOTOR FRAME	F	① G	H	V	Y CL.II	Y CL.III	Y CL.IV	Z CL.II	Z CL.III	Z CL.IV	② BB	② CC	FF	HH	JJ	④ MML
HDBI-120	56-184T	4 1/8	7 11/16	12 3/4	14	1 3/16	1 3/16	—	1/4	1/4	—	36 3/16	30 3/16	15 1/2	18 5/8	16	18 7/8
HDBI-130	56-184T	4 1/8	8 3/16	17	15 3/4	1 3/16	1 7/16	1 7/16	1/4	3/8	3/8	41 7/16	35 5/16	16 5/8	22 7/8	17 3/4	23 1/8
HDBI-150	56-215T	4 1/8	8 11/16	17	17 1/4	1 7/16	1 11/16	1 11/16	3/8	3/8	3/8	42 7/16	36 5/16	18 1/8	22 7/8	19 1/4	24 1/4
HDBI-160	56-215T	4 1/8	9 1/4	17	19 1/8	1 7/16	1 11/16	1 15/16	3/8	3/8	1/2	43 9/16	37 7/16	19 3/4	22 7/8	21 1/8	24 1/4
HDBI-180	56-256T	4 1/8	9 15/16	18 1/2	21 1/2	1 7/16	1 11/16	1 15/16	3/8	3/8	1/2	46 7/16	40 5/16	22 3/4	24 3/8	23 1/2	26 5/8
HDBI-200	56-256T	4 1/8	10 5/8	18 1/2	23 1/2	1 7/16	1 15/16	2 3/16	3/8	1/2	1/2	47 13/16	41 11/16	23 1/2	24 3/8	25 1/2	26 5/8
HDBI-220	145T-286T	5 1/8	11 7/16	21	26 1/8	1 7/16	1 15/16	2 3/16	3/8	1/2	1/2	52 15/16	45 13/16	26 1/4	26 7/8	28 1/8	29 3/4
HDBI-240	145T-324T	6 3/16	12 5/16	21	28 1/4	1 11/16	2 3/16	2 3/16	3/8	1/2	1/2	57 5/8	47 7/16	28 1/2	26 15/16	30 3/4	29 5/8
HDBI-270	182T-324T	6 3/16	13 1/4	21	31	1 11/16	2 3/16	2 7/16	3/8	1/2	5/8	59 1/2	49 5/16	31 1/4	26 15/16	33 3/4	29 5/8
HDBI-300	182T-324T	6 3/16	14 3/8	24 3/4	34 1/4	1 15/16	2 7/16	2 7/16	1/2	5/8	5/8	65 9/16	65 9/16	34 1/2	30 9/16	37 1/4	33 3/8

HDBI-330 and HDBI-360 are not available in Arrangement 10.

DIMENSIONS SUBJECT TO CHANGE WITHOUT NOTICE.

C.D. BELT CENTER DISTANCE

DIMENSIONS IN INCHES

MODEL	56 MIN.	56 MAX.	143T-145T MIN.	143T-145T MAX.	182T-184T MIN.	182T-184T MAX.	213T-215T MIN.	213T-215T MAX.	254T-256T MIN.	254T-256T MAX.	284T-186T MIN.	284T-186T MAX.	324T MIN.	324T MAX.
HDBI-120	8 1/8	10	8 1/8	10	7 1/2	9								
HDBI-130	9 1/4	11 1/8	9 1/4	11 1/8	8 3/8	10 1/8								
HDBI-150	10	12 1/8	10	12 1/8	9 1/8	11 1/8	8 3/8	10 3/8						
HDBI-160	11 5/8	13 5/8	11 5/8	13 5/8	10 5/8	12 5/8	10	11 7/8						
HDBI-180	14	16 1/8	14	16 1/8	12 3/4	15 1/8	12	14 3/8	11 1/8	13 3/8				
HDBI-200	14 3/4	16 7/8	14 3/4	16 7/8	13 1/2	15 7/8	12 3/4	15 1/8	11	13				
HDBI-220			17	19 3/4	16 1/8	18 5/8	15 3/8	17 7/8	14 3/8	16 7/8	13 3/4	16 1/4		
HDBI-240			19 1/4	22	18 1/4	21	17 5/8	20 1/8	16 5/8	19 1/8	15 7/8	18 3/8	14 7/8	17 3/8
HDBI-270					21	23 3/4	20 3/8	22 7/8	19 3/8	21 7/8	18 5/8	21 1/8	17 5/8	20 1/8
HDBI-300					24 1/4	26 7/8	23 1/2	26 1/8	22 1/2	25 1/8	21 7/8	24 3/8	20 7/8	23 3/8

⚠ DANGER

All fans & blowers shown have rotating parts and pinch points. Severe personal injury can result if operated without guards. Stay away from rotating equipment unless it is disconnected from its power source.

Read operating instructions.

DIMENSIONS and SPECIFICATIONS

HDBI-120 to 360, Arrangement #9RCB or #9LCB Channel Base, Belt Drive

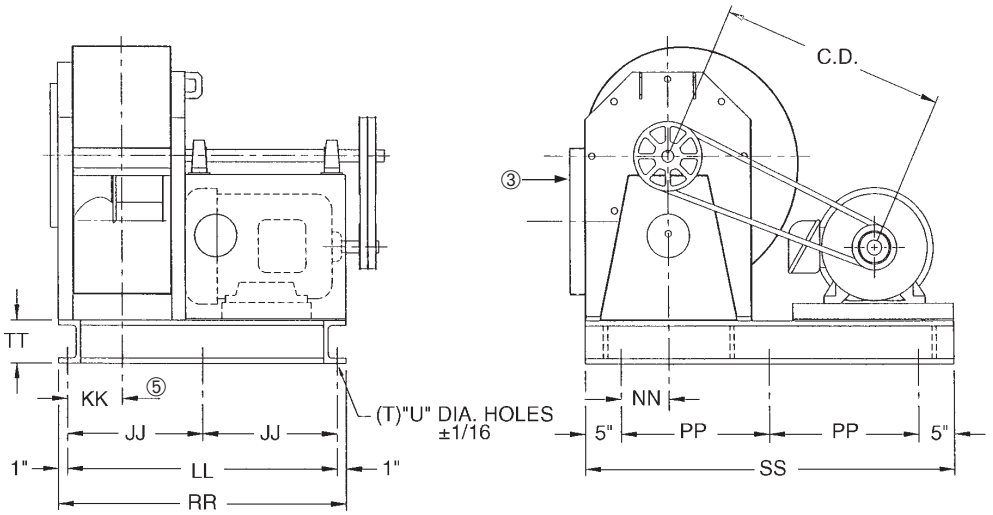

Unit shown is arrangement 9RCB (motor on right side). For motor on left side, specify arrangement 9LCB.
Channel base arrangements not available in down blast or 45° bottom angular down discharge positions.

DIMENSIONS IN INCHES ± 1/8"

MODEL	MOTOR FRAME	T	U	⑤ KK	JJ	LL	NN	PP	RR	SS	TT	Ship wt. less motor CL.II	CL.III	CL.IV
HDBI-120	184T-215T	6	9/16	5 3/4	—	28 3/16	3	13 15/32	30 3/16	36 15/16	4	260	265	—
HDBI-130	184T-256T	6	9/16	6 1/4	—	33 7/16	3 7/8	15 13/16	35 7/16	41 5/8	4	300	305	310
HDBI-150	184T-284T	6	9/16	6 3/4	—	34 7/16	4 5/8	17 3/4	36 7/16	45 1/2	4	340	350	360
HDBI-160	184T-286T	6	9/16	7 5/16	—	35 9/16	5 9/16	18 11/16	37 9/16	47 3/8	4	390	400	410
HDBI-180	184T-324T	6	9/16	8	—	38 7/16	6 3/4	21 3/16	40 7/16	52 3/8	6	500	510	520
HDBI-200	254T-324T	6	9/16	8 11/16	—	39 13/16	7 3/4	22 3/16	41 13/16	54 3/8	6	560	580	590
HDBI-220	254T-364T	6	9/16	9 1/2	—	43 15/16	9 1/16	26 11/16	45 15/16	63 3/8	6	660	680	690
HDBI-240	254T-364T	6	9/16	10 11/32	—	48 1/8	10 3/8	28	50 1/8	66	6	800	810	820
HDBI-270	254T-364T	6	9/16	11 9/32	—	50	11 7/8	29 1/2	52	69	6	960	970	980
HDBI-300	254T-405T	6	9/16	12 7/16	—	56 1/16	13 5/8	31 1/4	58 1/16	72 1/2	6	1130	1165	1170
HDBI-330	254T-444T	8	3/4	14 1/2	30 7/32	60 7/16	10	32 11/16	62 7/16	75 3/8	6	1420	1560	1760
HDBI-360	254T-444T	8	3/4	15 11/16	31 13/32	62 13/16	11 1/2	32 11/16	64 13/16	75 3/8	6	1650	1840	1910

③ Discharge flange (not shown above) is standard on Models HDBI-270 through HDBI-360. See page 31 for dimensions.
⑤ Subtract 1/8" for AMCA "C" Construction.
Dimensions subject to change without notice.

C.D. BELT CENTER DISTANCE

DIMENSIONS IN INCHES

MODEL	MOTOR FRAME SIZE 184T MIN.	184T MAX.	213T-215T MIN.	213T-215T MAX.	254T-256T MIN.	254T-256T MAX.	284T-286T MIN.	284T-286T MAX.	324T-326T MIN.	324T-326T MAX.	364T-365T MIN.	364T-365T MAX.	404T-405T MIN.	404T-405T MAX.	444T MIN.	444T MAX.
HDBI-120	23 5/8	25 7/8	21 15/16	24 11/16												
HDBI-130	27 1/2	29 5/8	25 7/8	28 5/8	23 15/16	27 3/16										
HDBI-150	31	33	29 5/16	32 1/8	27 3/8	30 5/8	25 15/16	29 11/16								
HDBI-160	32 5/8	34 13/16	30 7/8	33 9/16	28 7/8	32 1/16	27 7/16	31 1/16								
HDBI-180	37 1/4	39 1/4	35 5/8	38 1/4	33 5/8	36 11/16	32 1/8	35 3/4	29 13/16	34 1/8						
HDBI-200					34 13/16	37 15/16	33 3/8	36 15/16	31 1/16	35 5/16						
HDBI-220					42 15/16	46 1/16	41 1/2	45 1/8	39 3/16	43 1/2	37 3/16	42 3/16				
HDBI-240					45 1/8	48 3/16	43 11/16	47 3/16	41 5/16	45 9/16	39 5/16	44 1/4				
HDBI-270					47 3/4	50 3/4	46 1/4	49 3/4	43 15/16	48 1/16	41 15/16	46 3/4				
HDBI-300					50 7/8	53 13/16	49 7/16	52 13/16	47 1/16	51 1/8	45 1/16	49 3/4	42 7/16	47 13/16		
HDBI-330					58 5/8	61 9/16	57 3/16	60 1/2	54 13/16	58 13/16	52 13/16	57 7/16	53 1/8	58 13/16	51 9/16	57 11/16
HDBI-360					59 3/16	62	57 3/4	60 15/16	55 5/16	59 3/16	53 5/16	57 13/16	53 1/2	59	51 7/8	57 13/16

DIMENSIONS and SPECIFICATIONS

INLET AND OUTLET FLANGES

INLET

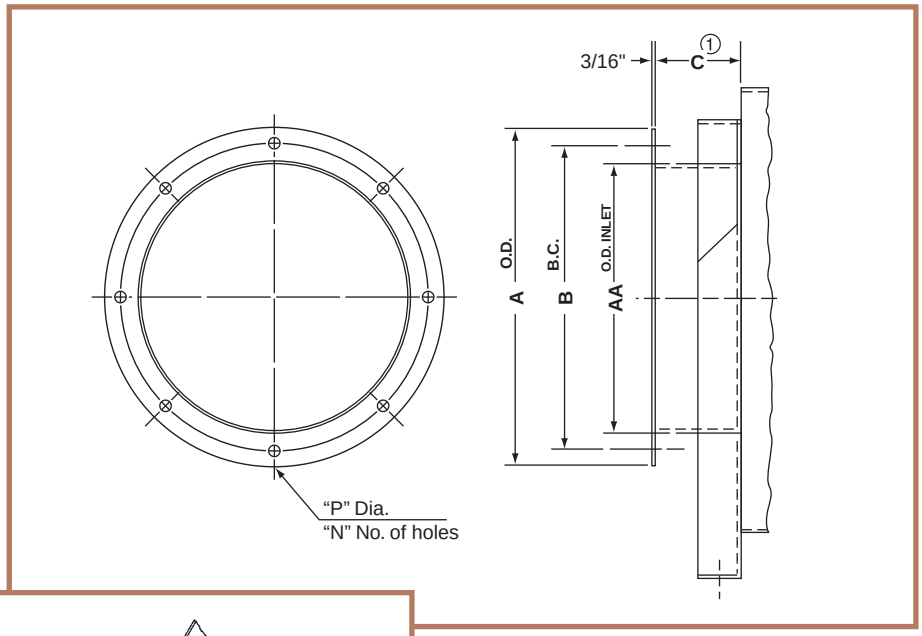

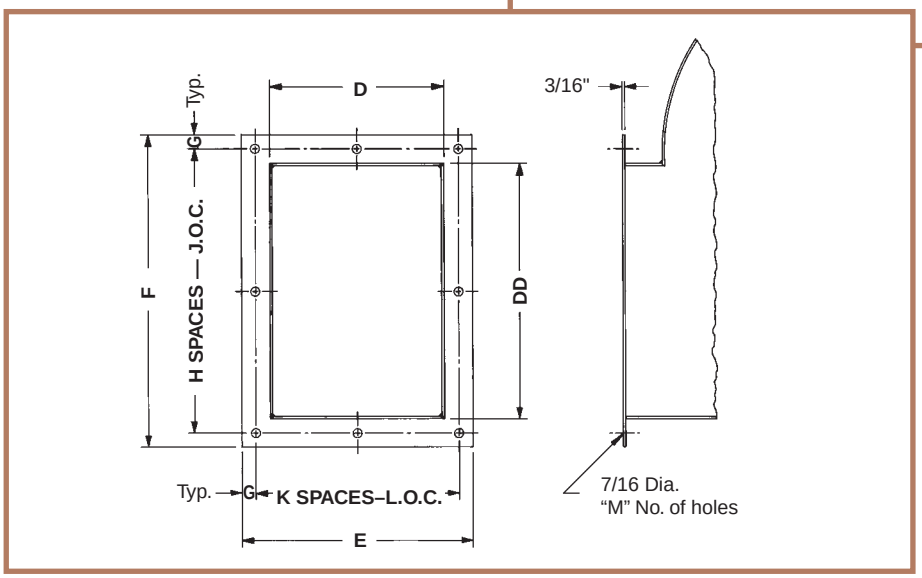

OUTLET*

*** Not available on: down blast, top angular down, or bottom angular down outlet positions for any models without discharge transition. Outlet flange standard on all HDBI-270 to HDBI-360. Dimensions shown below are for 100% width housings. For partial width housings, contact your local Cincinnati Fan sales representative.**

NOTE: Flanges will be drilled unless otherwise specified.

DIMENSIONS IN INCHES ± 1/16" **

DIMENSIONS SUBJECT TO CHANGE WITHOUT NOTICE.

MODEL	A	B	C①**	D**	E	F	G	H	J	K	L	M	N	P	AA**	DD**
HDBI-120	16	14 3/8	4 1/16	9 3/8	13 3/8	17 11/16	1	2	7 27/32	2	5 11/16	8	8	7/16	13 1/4	13 3/4
HDBI-130	17 3/4	15 15/16	4 1/16	10 3/8	14 3/8	19 3/16	1	2	8 19/32	2	6 3/16	8	8	7/16	14 5/8	15 1/4
HDBI-150	19 1/4	17 1/2	4 1/16	11 3/8	15 3/8	20 3/4	1	3	6 1/4	2	6 11/16	10	8	7/16	16 1/8	16 13/16
HDBI-160	21 1/8	19 3/8	4 1/16	12 1/2	16 1/2	22 7/16	1	3	6 13/16	2	7 1/4	10	8	7/16	18	18 7/16
HDBI-180	23 1/2	21 1/2	4 1/16	13 7/8	17 7/8	24 1/2	1	3	7 1/2	2	7 15/16	10	12	7/16	20	20 3/8
HDBI-200	25 1/2	23 1/2	4 1/16	15 1/4	19 1/4	26 3/8	1	3	8 1/8	3	5 3/4	12	12	7/16	22	22 3/8
HDBI-220	28 1/8	26 1/8	4 1/16	16 7/8	20 15/16	28 7/8	1	4	6 23/32	3	6 5/16	14	12	7/16	24 5/8	24 7/8
HDBI-240	30 3/4	28 3/4	6 1/16	18 9/16	22 5/8	31 3/8	1	4	7 11/32	3	6 7/8	14	16	7/16	27	27 3/8
HDBI-270	33 3/4	31 5/8	6 1/16	20 7/16	24 1/2	34 1/8	1	4	8 1/32	3	7 1/2	14	16	7/16	30	30 1/16
HDBI-300	37 1/4	35 1/4	6 1/16	22 3/4	26 3/4	37 5/8	1	5	7 1/8	3	8 1/4	16	16	7/16	33 1/2	33 9/16
★HDBI-330	40 3/8	38 3/4	6 1/16	24 7/8	28 7/8	40 7/8	1	7	5 9/16	5	5 3/8	24	16	1/2	36 3/4	36 7/8
★HDBI-360	43 5/8	42	6 1/16	27 1/4	31 1/4	44 1/4	1	7	6 1/32	5	5 27/32	24	16	1/2	40	40 1/4

① Add 1/8" for AMCA "C" Construction fans and/or Downblast discharge position.

★ HDBI-330 & 360 HAVE FIXED HOUSINGS AND ARE THEREFORE NOT ROTATABLE IN THE FIELD.

****NOTE: Dimensions C, D, AA and DD are ± 1/8".**

TOSHIBA
Leading Innovation >>>

LOW VOLTAGE MOTORS INSTRUCTION MANUAL (IM)

INSTRUCTIONS:

INSTALLATION AND MAINTENANCE FOR POLYPHASE AC INDUCTION MOTORS

- Frames 143 through 5810 Open Drip Proof
- Frames 56 through 5811 Totally Enclosed Fan Cooled
- Frames 143 through 449 Explosion Proof
- Frames 56 through 5811 Totally Enclosed Air-Over
- Frames 56 through 449 Totally Enclosed Non-Ventilated
- Frames 143 through 5811 Totally Enclosed Blower Cooled

NOTE: Condensed manual only. Contact TOSHIBA below for Complete Installation, Operations & Maintenance (IOM) Manual. These instructions are not intended as a complete listing of all details for all procedures required for storage, installation, operation, and maintenance. If you have any questions concerning any of the procedures, Do Not Proceed, and contact Toshiba International Corporation.

STORAGE:

(1) Store motor in a clean, dry location and cover completely with plastic. (Leave opening for ventilation.)
(2) Motor must be thoroughly dry before applying power.
(3) Every six months, give winding a megger test. A minimum of 10 megohms are recommended.

These NOTES & WARNINGS are to be read and understood along with the Low Voltage Motors Instruction Manual before installing, operating, or maintaining the electric motors. This will help avoid unsafe conditions that can cause harm to personnel or damage to equipment.

NOTE: Each TOSHIBA electric motor is thoroughly tested at the factory and carefully packaged for standard shipping. Confirm the overall packaging condition upon receipt.

NOTE: The equivalent lead wire markings per NEMA(IEC) are: TI(U1), T2(V1), T3(W1), T4(U2), T5(V2), T6(W2), T7(U5), T8(V5), T9(W5), T10(U6), T11(V6), T12(W6).

NOTE: All dimensions are in inches (in) or (“). Divide inches by 25.4 to convert to millimeters (mm).

NOTE: Any motor operated on an Adjustable Speed Drive is subject to potential premature bearing failures due to the increased shaft currents caused by common mode voltages inherent with operation on a sinusoidal power source. TOSHIBA recommends insulating both bearings on frame sizes 444 and larger due to the higher risk of bearing failure. Smaller motors are at risk as well and should be considered after review of the application and installation.

NOTE: Contact TOSHIBA for a complete copy of TOSHIBA’s “Standard Motor Warranties” policy.

WARNING: Do not disable or bypass any safety guards or protective devices.

WARNING: 140 frame motors should be lifted by two (2) people.

WARNING: Avoid touching the hot surfaces of the electric motor without wearing proper protection.

WARNING: Hearing protection is required around noise levels exceeding 80 dBA.

WARNING: Protection for overload and peak starting currents, and short circuit and ground fault currents, should be in strict accordance with the National Electrical Code Article 430, and local electrical and building codes.

WARNING: Proper circuit protection is required to prevent automatic reset devices from automatically restarting the electric motor if it can be hazardous to personnel or equipment.

WARNING: Only qualified maintenance personnel should be permitted to perform maintenance in an effort to prevent equipment failure or damage.

WARRANTY:

Generally TOSHIBA will correct at it’s option, by repair or replacement (FOB a TOSHIBA-AUTHORIZED SERVICE SHOP), any defect in material and workmanship when properly used for a period of one year after installation or 18 months after shipment, whichever comes first. TOSHIBA is not responsible for apparatus returned without proper authorization and identification, improper handling or storage, misapplication of the motor or driven equipment or device, or improper circuit protection. The amount of liability shall not exceed the purchase price of the product. In no event shall TOSHIBA have any liability for commercial loss, claims for labor, removal and installation charges or consequential damages of any type. It is expressly agreed that Buyer’s remedies expressed in this paragraph are Buyer’s exclusive remedies.

RENEWAL PARTS:

(1) Use only genuine TOSHIBA renewal parts.
(2) When ordering, specify complete information (at least Model Number and Serial Number) of the motor. Specify quantity and describe part. **See the IOM Manual.**
(3) For information and service, contact TOSHIBA INTERNATIONAL CORPORATION.

WARNING:

EXPLOSION-PROOF MOTORS are constructed to comply with the UL Label Service Procedure Manual. Repairs of EXPLOSION-PROOF MOTORS must be made by the manufacturer or UL Listed service center to maintain the UL Listing.

MOTOR MAINTENANCE:

INSPECTION:

Inspect motor at regularly scheduled intervals. Keep motor clean and ventilation openings clear of dust, dirt, or other debris.

LUBRICATION:

(1) All motors that are supplied with grease fittings should be lubricated in accordance with the grease label attached to the motor. **See IOM manual.**
(2) Bearings and grease must be kept free of dirt.
(3) Do not over grease! Excessive lubrication will cause overheating, reduce bearing life, and may cause premature bearing failure.
(4) Oil leakage around bearing caps is an indication of over greasing and excess grease should be purged out by operating motor temporarily with grease relief open.

Recommended Greases for STANDARD Applications

Use the greases listed in the **IOM Manual** for the given temperature range, unless otherwise shown by the motor's grease nameplate.

Recommended Greases for SPECIAL Applications

The greases shown in the **IOM Manual** recommended for special applications only should be used only for motors specifically built for such conditions. In general it is not recommended to mix greases of different brands. The mixing of different types of thickeners may destroy the composition and physical properties of the grease. In the event that a different grease is required by the end user, the following steps can be taken. Using the instructions for lubrication, open grease outlet and purge the system as much as possible of the old or unwanted grease. Repeat this same operation after one (1) week of service.

READ CAREFULLY BEFORE INSTALLING AND STARTING MOTOR (OWNERS RESPONSIBILITY TO SAVE THESE INSTRUCTIONS)

RECEIVING:

(1) Check Nameplate.
(2) Check whether any damage has occurred during transportation. (Motors are normally shipped FOB factory. Freight claims must be submitted by the consignee to the carrier.)
(3) When supplied - be sure to remove bearing lock plate before start-up.
(4) Turn shaft by hand to check that it turns freely.

LOCATION:

(1) All motors should be located in an area where ventilation is not restricted and affects the operation of the motor.
(2) Open Drip Proof Motors are designed for installation in a well ventilated place where the atmosphere is reasonably free of dirt and moisture.
(3) Totally Enclosed Motors may be installed where dirt, moisture (not running water) and corrosion are present, or in outdoor locations.
(4) Explosion Proof Motors are designed and built for hazardous locations. They are UL listed and nameplated for a specific hazardous area of classification as well as CSA listed.

MOUNTING:

(1) Mount motor securely on a firm, flat base. All ball and roller bearing normal thrust motors through the 447 frame should be capable of mounting in any position, mechanically. Consult TOSHIBA for frames larger than 447. Proper drains and construction may be required due to the present environment.
(2) Align motor accurately, using a flexible coupling, if possible. For drive recommendations, consult with drive or equipment manufacturer, or TOSHIBA.
(3) V-belt Sheave Pitch Diameters should not be less than the NEMA recommended values.
(4) Do not over tension the belts as excess tension may damage the motor or driven equipment. Belt speed should not exceed 5000 ft. per minute.
(5) Motors must not be subjected to vibration exceeding 0.5 G force. (Motors should not be mounted to shaker screens.)

POWER SUPPLY & CONNECTIONS:

(1) Nameplate voltage and frequency should agree with power supply. Motor will operate satisfactorily on line voltage within 10% of nameplate value; or frequency within 5%; combined variation not to exceed 10%. 230 Volt motors can be used on 208-volt network systems, but with slightly modified performance characteristics.
(2) Dual voltage motors can be connected for the desired voltage by following the connection diagram shown on the nameplate, or by the connection diagram found in the conduit box cover. Alternate starting connections are shown in the conduit box connection diagrams. **See IOM Manual.**
(3) Explosion Proof Motors have Temperature Limiting Devices in the motor enclosure to prevent excessive external surface temperature of the motor in accordance with UL standards. Terminals of thermal protectors (P1, P2) shall be connected to the motor control equipment.
(4) Wiring of motor, control, overload protection and grounding should be in accordance with the National Electrical Code and local building codes.
(5) Disconnect motor from power supply before opening conduit box or working on motor.
(6) Megger test before energizing. A minimum of 10 megohms are recommended.

FOR FURTHER INFORMATION CONTACT:
TOSHIBA INTERNATIONAL CORPORATION
INDUSTRIAL EQUIPMENT DIVISION
13131 WEST LITTLE YORK ROAD, HOUSTON, TX 77041
PHONE (713)466-0277 FAX (713) 466-8773 TOLL FREE (800)231-1412

Date: *4/21/2016*

Job: *Merrimac Caverns 18" Air Piping*

Salina Supply Company
302 North Santa Fe P.O. Box 5100
Salina, Kansas 67402-5100
Phone (785)823-2221 Fax (785)823-3532
Toll Free 1(800)288-1231

To: *Greenfield Contracting*
P.O. Box 667
Salina, KS 67402-0667

Attn: *Tim Pace*

Email: tim@greenfieldcontractors.com

Item No.	*Qty.*	*Description*	*Unit Price*	*Total*
	66	18" x 22' 80psi/SDR-51 PVC irrigation pipe--bell one end, 18.7" O.D. Weight-14.3#/ft. (Priced per foot)	$24.98	1,648.68
	2	18" 80psi/SDR-51 PVC 150# PVC Van-stone flange x solvent weld hub--supplied with powder coated steel backing flange	$715.16	1,430.32
	2	18" bolt & gasket flange pack with full face red rubber gasket and alloy bolts	$114.80	229.60
	2	18" 80psi/SDR-51 PVC 90° elbow-solvent weld hub both ends	$317.94	635.88
	1	18" 80psi/SDR-51 PVC coupling-solvent weld hub both ends with stop	$116.89	116.89
	2	LDC-18.7x12.76 Fernco 18"x12" reducing coupling	$546.22	1,092.44
	4	1100-12 Anvil 12" pipe strut clamp	$24.22	96.88
		Freight allowed Delivery 10 to 14 days		
			Subtotal	**5,250.69**
			Tax	
			Total	**5,250.69**

Thank You,

Mark Zimmerman

Mark Zimmerman

C-more®

AUTOMATIONDIRECT.com

3505 HUTCHINSON ROAD
CUMMING, GA 30040-5860

C-more EA9 Series Touch Panels

Quick Start Guide

Safety Information

WARNING: To minimize the risk of potential safety problems, you should follow all applicable local and national codes that regulate the installation and operation of your equipment. These codes vary from area to area and it is your responsibility to determine which codes should be followed, and to verify that the equipment, installation, and operation are in compliance with the latest revision of these codes.

Equipment damage or serious injury to personnel can result from the failure to follow all applicable codes and standards. We do not guarantee the products described in this publication are suitable for your particular application, nor do we assume any responsibility for your product design, installation, or operation.

If you have any questions concerning the installation or operation of this equipment, or if you need additional information, please call technical support at 1-800-633-0405 or 770-844-4200.

This publication is based on information available at the time it was printed. At ***Automationdirect.com®*** we constantly strive to improve our products and services, so we reserve the right to make changes to the products and/or publications at any time without notice and without obligation. This publication may also discuss features that may not be available in certain revisions of the product.

ADVERTISSEMENT: Afin de réduire au minimum le risque d'éventuels problèmes de sécurité, vous devez respecter tous les codes locaux et nationaux applicables régissant l'installation et le fonctionnement de votre équipement. Ces codes diffèrent d'une région à l'autre et, habituellement, évoluent au fil du temps. Il vous incombe de déterminer les codes à respecter et de vous assurer que l'équipement, l'installation et le fonctionnement sont conformes aux exigences de la version la plus récente de ces codes.

L'omission de respecter la totalité des codes et des normes applicables peut entraîner des dommages à l'équipement ou causer de graves blessures au personnel. Nous ne garantissons pas que les produits décrits dans cette publication conviennent à votre application particulière et nous n'assumons aucune responsabilité à l'égard de la conception, de l'installation ou du fonctionnement de votre produit.

Si vous avez des questions au sujet de l'installation ou du fonctionnement de cet équipement, ou encore si vous avez besoin de renseignements supplémentaires, n'hésitez pas à nous téléphoner au 770-844-4200.

Cette publication s'appuie sur l'information qui était disponible au moment de l'impression. À la société **AutomationDirect**, nous nous efforçons constamment d'améliorer nos produits et services. C'est pourquoi nous nous réservons le droit d'apporter des modifications aux produits ou aux publications en tout temps, sans préavis ni quelque obligation que ce soit. La présente publication peut aussi porter sur des caractéristiques susceptibles de ne pas être offertes dans certaines versions révisées du produit.

Before you begin...

Minimum items required to create a working system:

- ***C-more*** EA9 Touch Panel - 6", 8", 10", 12" or 15" model
- ***C-more*** Programming Software, p/n EA9-PGMSW
- Personal computer - to run the ***C-more*** programming software
- ***C-more*** USB Programming Cable, p/n USB-CBL-AB15 or Ethernet connectivity between PC and Touch Panel
- Power source: ***C-more*** AC/DC Power Adapter, p/n EA-AC or a dedicated 12-24 VDC switching power supply
- Communications Cable (serial or Ethernet) – to connect the ***C-more*** Touch Panel to your controller

Copyright 2014, *Automationdirect.com* Incorporated/All Rights Reserved Worldwide

1 Unpack and Inspect

Inspect all equipment for completeness. If anything is missing or damaged, immediately call the AutomationDirect® returns department @ 1-800-633-0405.

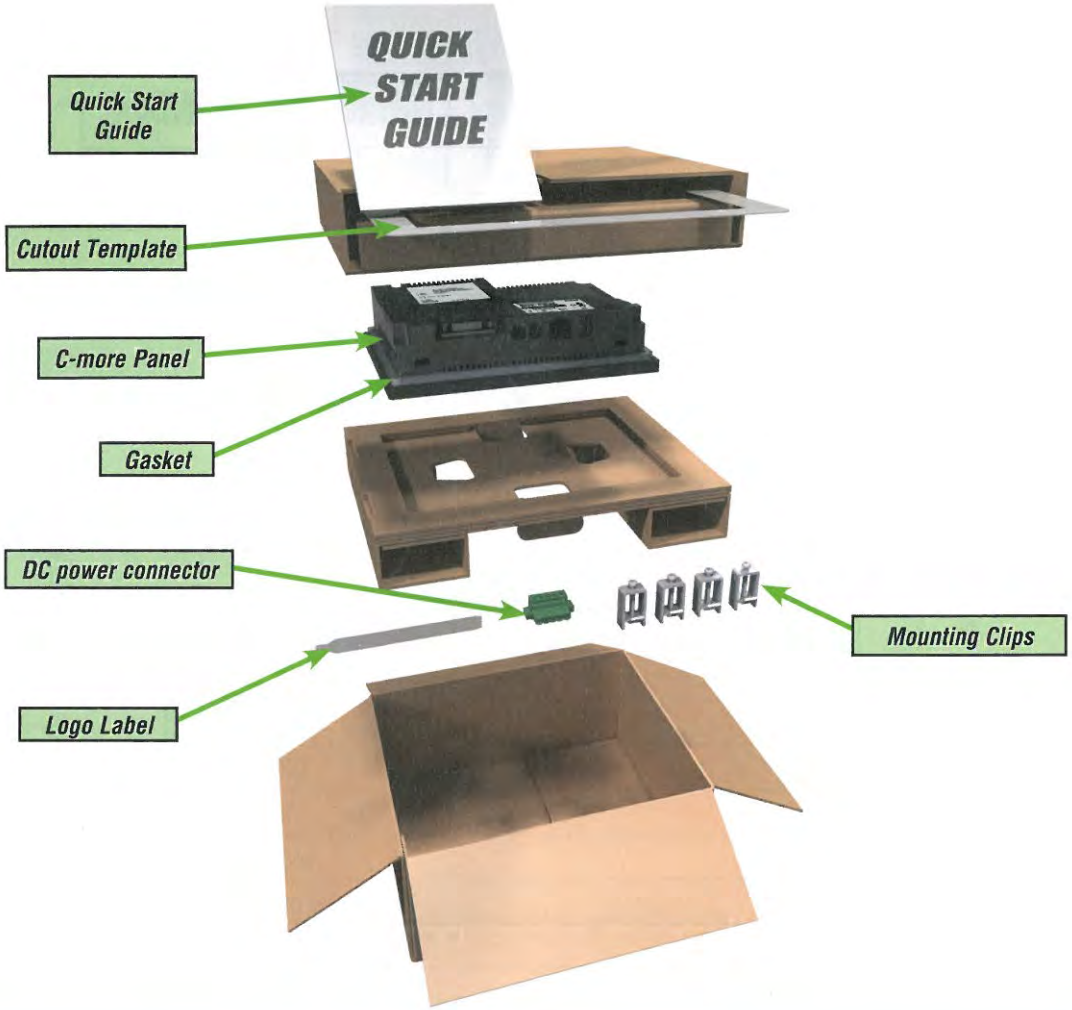

2 Install Optional Hardware Accessories

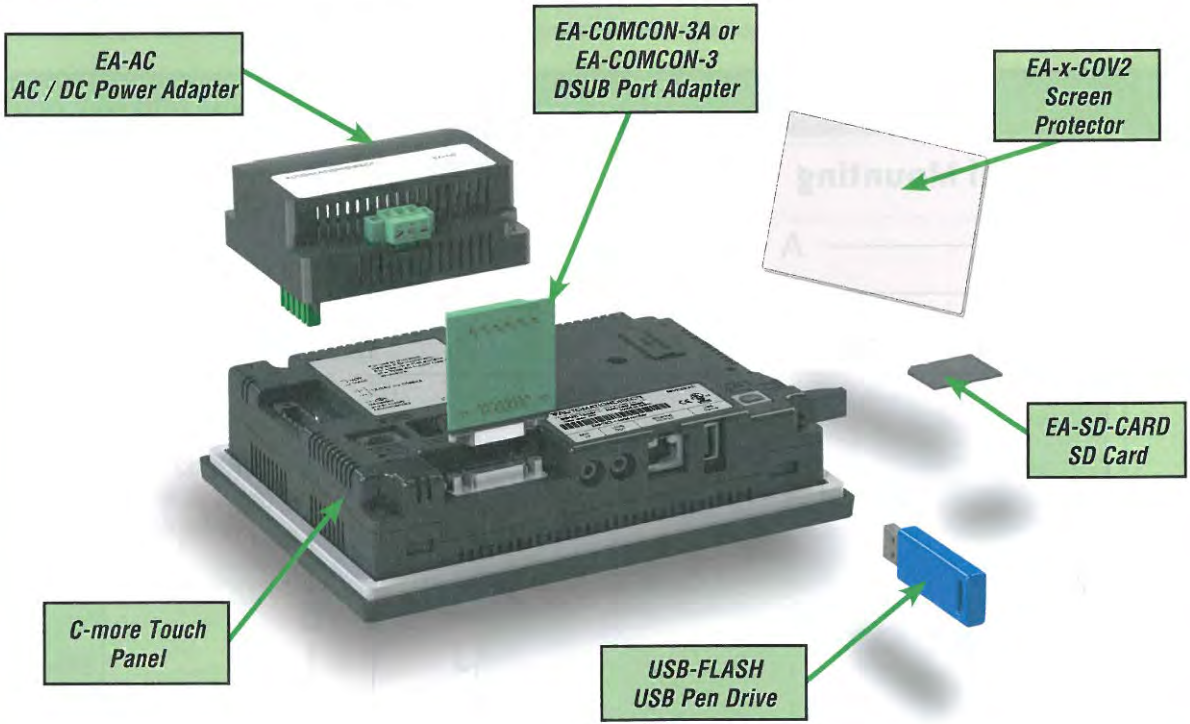

3 Available Communication Ports

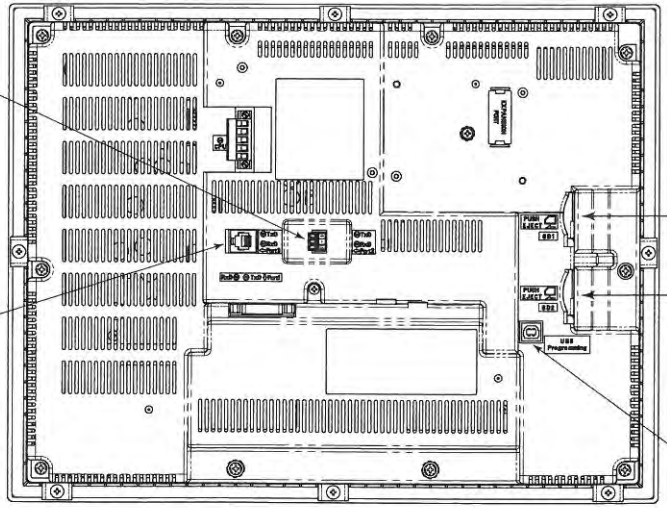

Pin	Signal
1	0V
2	N.C.
3	RXD
4	TXD
5	+5V
6	0V

Pin	Signal
1	Vbus
2	D–
3	D+
4	GND
Shell	Shield

Pin	Signal	Pin	Signal	Pin	Signal
1	Frame GND	6	LE (for DH485)	11	TXD+ (422/485)
2	TXD (232C)	7	CTS (232C)	12	TXD– (422/485)
3	RXD (232C)	8	RTS (232C)	13	Term. Resistor
4	VCC	9	RXD+ (422/485)	14	N.C.
5	Logic GND	10	RXD– (422/485)	15	N.C.

Pin	Signal	Pin	Signal
1	TD+	5	do not use
2	TD–	6	RD–
3	RD+	7	N.C.
4	do not use	8	N.C.

Pin	Signal
1	Vbus
2	D–
3	D+
4	GND
SHELL	Shield

Link Status LED (Green)	
	Ethernet Linked
Off	No Ethernet Comm.
Blinking Green	Comm. Activity

Network Activity LED (Yellow)	
On	Active Network Data
Off	Network Idle

Note: Device is not available on Base Feature touch panel EA9-T6CL-R

Note: Device is only available on touch panels EA9-T12CL and EA9-T15CL.

Note: Use USB Programming Cable, p/n USB-CBL-AB15.

4 Install the Software and Develop a project

- Purchase the ***C-more*** programming software, EA9-PGMSW at *AutomationDirect.com*. EA9-PGMSW is available on CD or by download.
- Install EA9-PGMSW on your PC.
- Use the software to create a project.
- Download the project to the ***C-more*** panel from the software via Ethernet or USB cable or on USB memory or SD card

Notes regarding Ethernet access to a C-more panel.
If you intend to take advantage of the methods of remote access to the panel, including the web server, PC remote access, FTP, iPhone or iPad app, you need to consider the security exposure in order to minimize the risks to your process and your C-more panel.

Security measures may include password protection, changing the ports exposed on your network, including a VPN in your network, and other methods. Security should always be carefully evaluated for each installation.

5 Connect *C-more* Panel to Computer

- **Connect** a USB Programming Cable, such as p/n USB-CBL-AB15, from a USB type A port on the PC to the USB type B programming port on the ***C-more*** touch panel
- **or** connect the ***C-more*** touch panel and PC together either directly or via an Ethernet switch, and CAT5 Ethernet cables (full feature panels only)

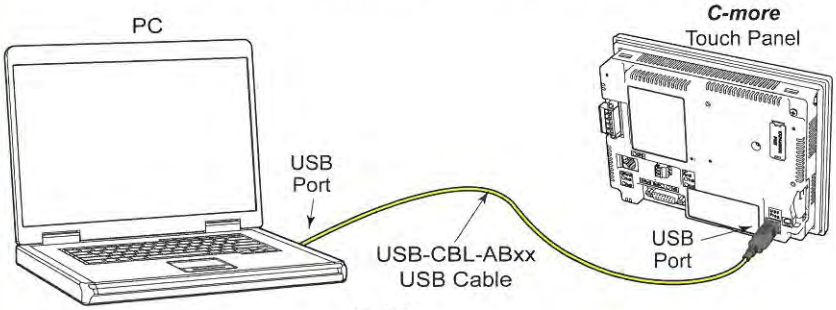

USB

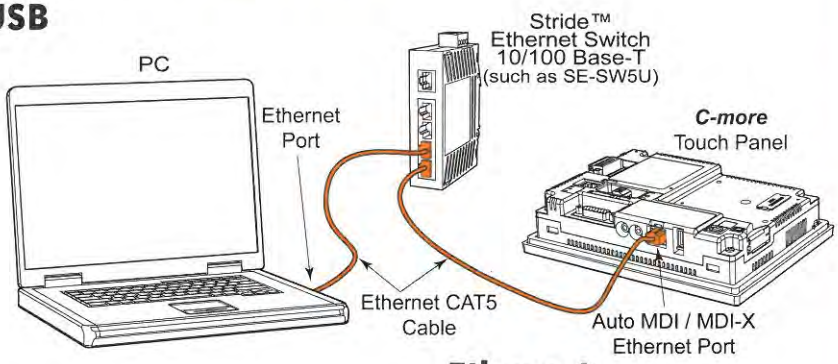

Ethernet via Switch

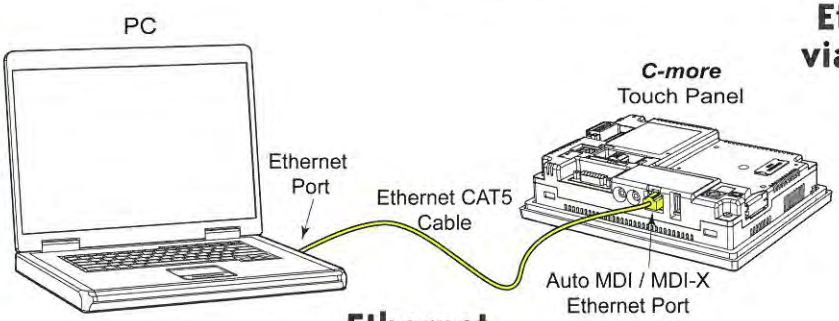

Ethernet via Cable

6 Provide Power to *C-more* Panel

Wire a ***dedicated 12-24 VDC*** power source to the DC connector on the rear of the ***C-more*** touch panel, include wiring the ground terminal to a proper equipment ground. The recommended power supply is AutomationDirect p/n: PSC24-060

- ***or*** install a ***C-more*** AC/DC Power Adapter, p/n EA-AC, to the rear of the touch panel and wire an AC voltage source of 100-240 VAC, 50/60Hertz, to its AC connector
- ***then*** turn on the power source and check the LED status indicators on the front and rear of the ***C-more*** touch panel for proper indication

AC Wiring

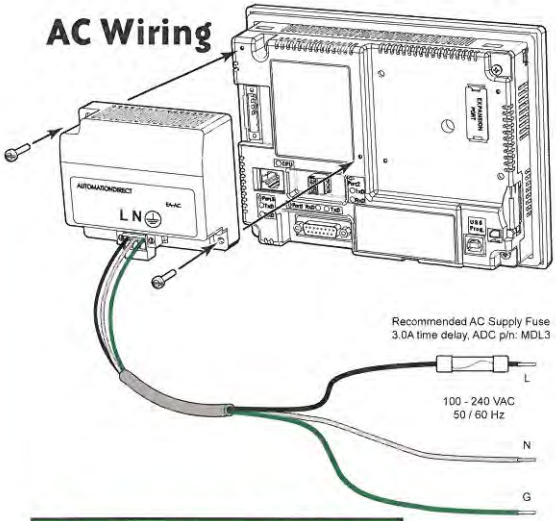

EA-AC Tightening Torque	
Power supply cable torque	71 - 85 oz-in (0.5 - 0.6 Nm)
Power connector mounting torque	71 - 85 oz-in (0.5 - 0.6 Nm)
Mounting flange screw torque	57 - 71 oz-in (0.4 - 0.5 Nm)

DC-CON Tightening Torque	
Power connector screw torque	70.4 oz-in (0.5 Nm)
Power connector mounting torque	56 oz-in (0.4 Nm)

Use 60 / 75°C copper conductors only, 12 - 24 AWG

DC Wiring

Recommended DC Supply Fuse		
Panel Size	Rating	ADC p/n
6" – 10"	2.5 A	MDL2-5
12" & 15"	4.0 A	MDL4

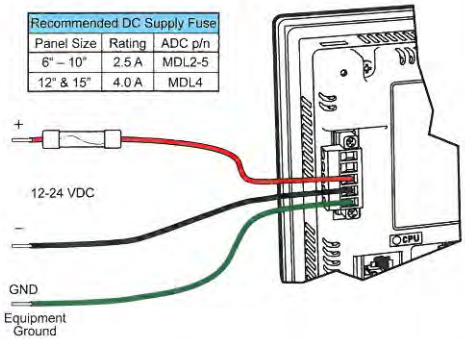

CPU Status LED (Green, Orange & Red)	
Off	Power Off
Green	Normal - CPU Run State
Red	Memory Error
Blinking Red	Watchdog Timer Error
Blinking Orange	OS Error
Blinking Green	Power Loss Detection

Power LED (Front of Panel)		
Color	On	Off
Green	Power On	Power Error

NOTE: *Use 60 / 75 °C copper conductors only, 12 - 24 AWG*

Power Specifications						
Specification / Model	EA9-T6CL-R	EA9-T6CL	EA9-T8CL	EA9-T10CL	EA9-T12CL	EA9-T15CL
Power Consumption	16.0W 1.30A @ 12 VDC 0.66A @ 24 VDC		18.0W 1.50A @ 12 VDC 0.75A @ 24 VDC	18.0W 1.50A @ 12 VDC 0.75A @ 24 VDC	21.0W 1.75A @ 12 VDC 0.88A @ 24 VDC	29.0W 2.40A @ 12 VDC 1.20A @ 24 VDC
Internal Fuse (non-replaceable)	4.0A		6.3A			

7 Access the *C-more* Panel Setup Screens

- Access the Main Menu of the touch panel setup screens by pressing the extreme upper left corner of the panel display area for three (3) seconds as shown below.
- Adjust the time and date for the panel by pressing the Setting button on the Main Menu, then press the Adjust Clock button on the Setting screen.
- Use the right pointing arrows for the time or date display to select the unit to change. Use the up and down arrows to increment or decrement the value for the selected unit.
- Press OK when done to accept the changes to the time and date that is retained in he touch panel's battery backed memory, or press Cancel to exit the Adjust Clock setup screen without making any changes.
- Press the Main Menu button on the Setting screen and then the Exit button on the Main Menu screen to return to the application screen.

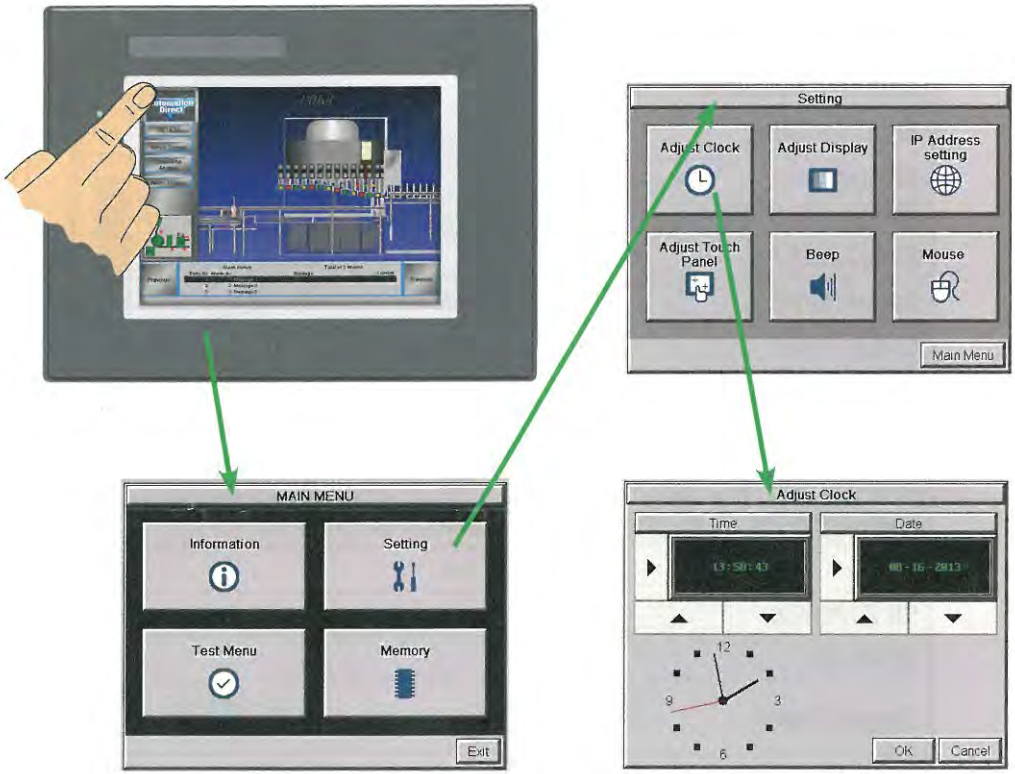

8 Connect the *C-more* Panel to a PAC or PLC

- Connect the serial communications cable between the ***C-more*** touch panel and the PLC
- ***or*** connect the ***C-more*** touch panel and PLC together via an Ethernet switch and Ethernet cables (full feature panels only)
- ***or*** use an Ethernet cable directly between the ***C-more*** Ethernet port and the PLC Ethernet port (full feature panels only)

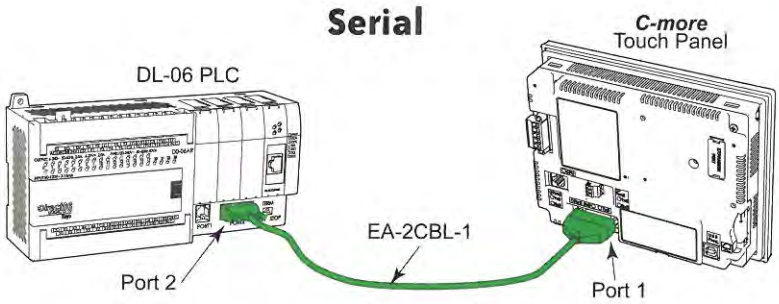

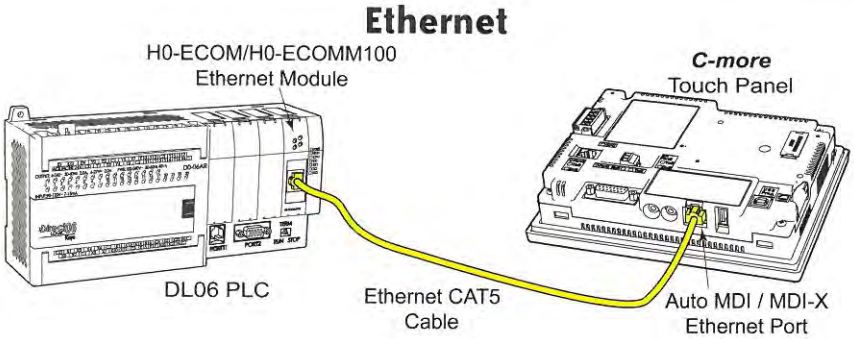

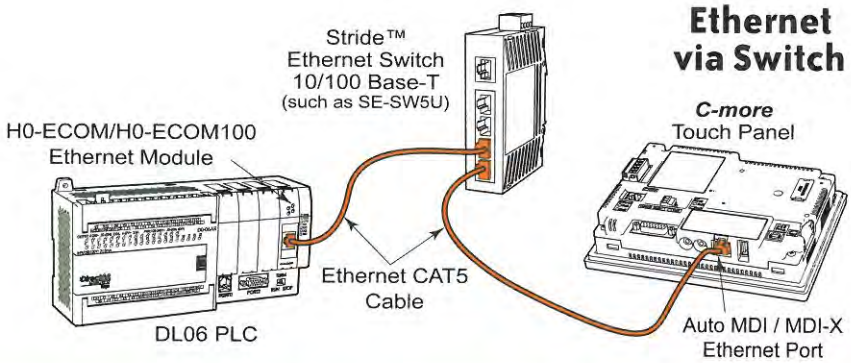

Additional Help and Support

- For product support, specifications, and installation troubleshooting, a Hardware User Manual can be downloaded from the On-line Documentation area of the ***AutomationDirect*** Web site
- For software programming help, refer to the ***C-more*** Programming Software on-line embedded help.
- Refer to demos of the product at: http://c-more.automationdirect.com/software/software_demo.html
- For additional technical support and questions, call our Technical Support team @ 1-800-633-0405 or 770-844-4200.

C-more Panel Dimensions

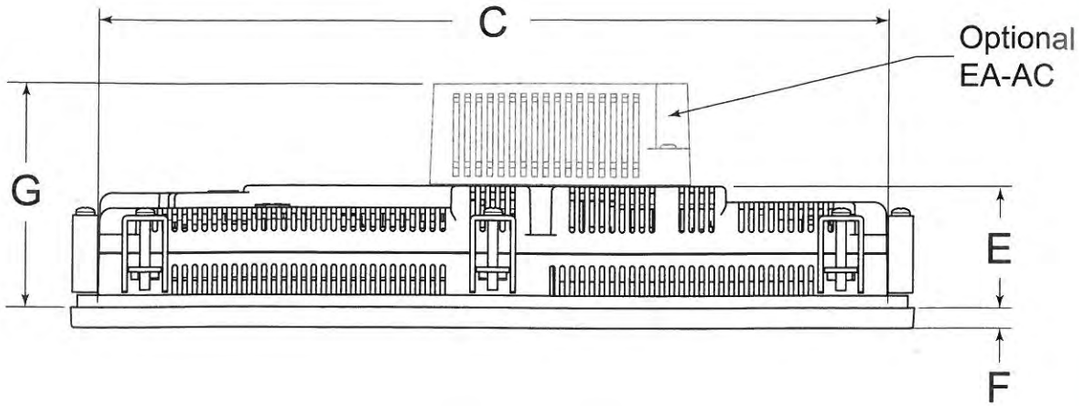

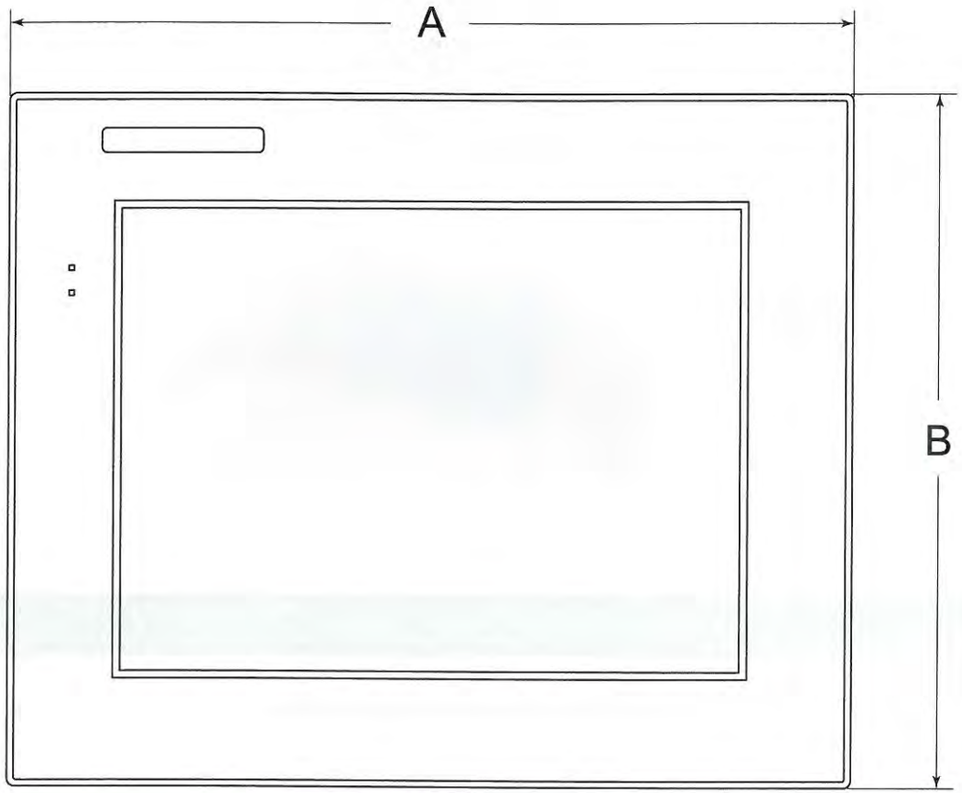

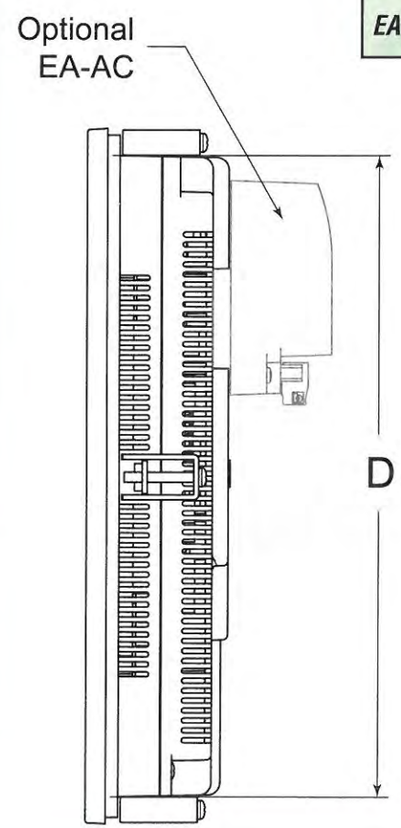

Panel Dimensions							
Model Number	***A***	***B***	***C***	***D***	***E***	***F***	***G***
EA9-T6CL-R	8.08 [205.2]	6.13 [155.8]	7.40 [188.0]	5.46 [138.7]	1.58 [40.1]	0.32 [8.1]	2.99 [75.9]
EA9-T6CL	8.08 [205.2]	6.13 [155.8]	7.40 [188.0]	5.46 [138.7]	1.58 [40.1]	0.32 [8.1]	2.99 [75.9]
EA9-T8CL	9.87 [250.7]	7.69 [195.4]	9.19 [233.4]	7.01 [178.1]	2.09 [53.1]	0.32 [8.1]	3.51 [89.2]
EA9-T10CL	12.52 [318.0]	9.53 [242.1]	11.84 [300.7]	8.84 [224.5]	1.93 [49.0]	0.32 [8.1]	3.51 [89.2]
EA9-T12CL	13.37 [339.6]	11.02 [280.0]	12.52 [318.0]	10.17 [258.3]	1.93 [49.0]	0.32 [8.1]	3.35 [85.1]
EA9-T15CL	15.75 [400.0]	12.09 [307.2]	14.88 [378.0]	11.20 [284.5]	1.93 [49.0]	0.32 [8.1]	3.35 [85.1]

Units: Inches [mm]

C-more Panel Mounting

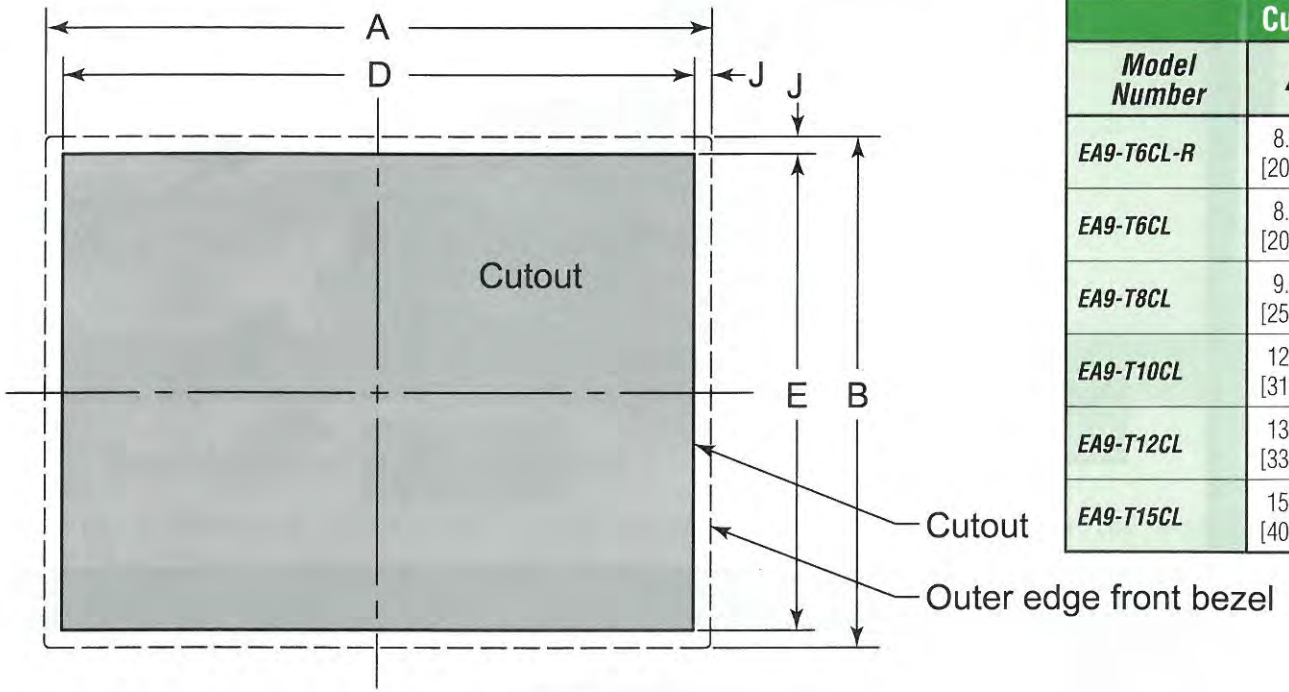

Cutout Dimensions					
Model Number	*A*	*B*	*D*	*E*	*J*
EA9-T6CL-R	8.08 [205.2]	6.13 [155.8]	7.46 [189.5]	5.51 [140.0]	0.31 [7.9]
EA9-T6CL	8.08 [205.2]	6.13 [155.8]	7.46 [189.5]	5.51 [140.0]	0.31 [7.9]
EA9-T8CL	9.87 [250.7]	7.69 [195.4]	9.25 [235.0]	7.07 [179.6]	0.31 [7.9]
EA9-T10CL	12.52 [318.0]	9.53 [242.1]	11.90 [302.3]	8.91 [226.3]	0.31 [7.9]
EA9-T12CL	13.37 [339.6]	11.02 [280.0]	12.57 [319.3]	10.22 [259.6]	0.40 [10.2]
EA9-T15CL	15.75 [400.0]	12.09 [307.2]	14.93 [379.2]	11.27 [286.3]	0.41 [10.4]

Units: Inches [mm]

Additional Installation Information

- Clearance – The mounting clearances when installing the touch panel in an enclosure or cabinet shall be of 4 inches from the top, bottom and sides and 1.72 inches from the rear.

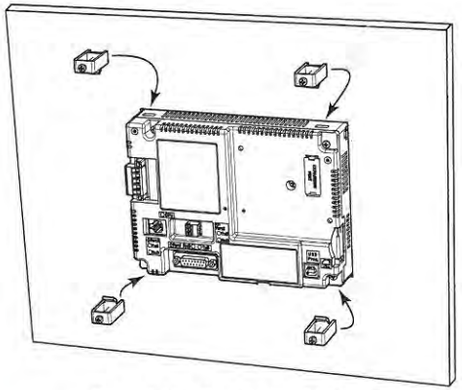

EA9-T6CL, EA9-T6CL-R
and EA9-T8CL
(4 places)

Mounting Bracket Locations

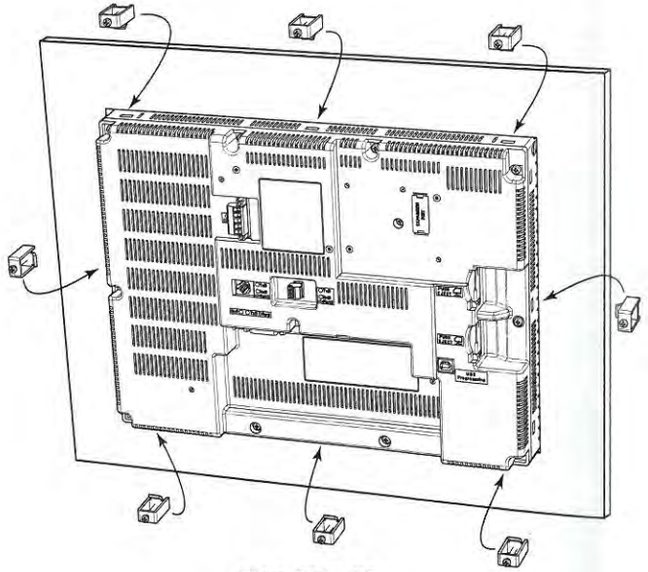

EA9-T12CL
and EA9-T15CL
(8 places)

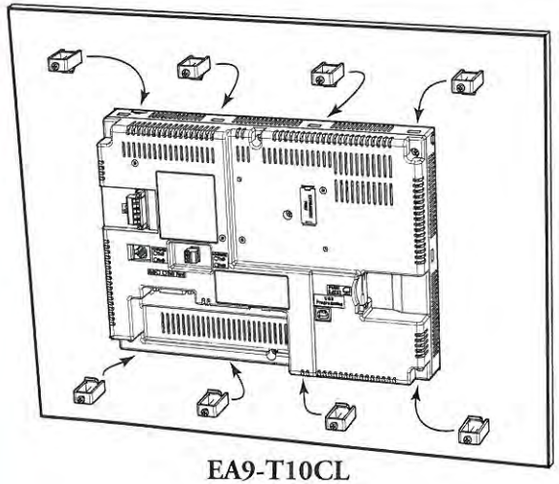

EA9-T10CL
(8 places)

Additional Installation Information

- Clearance – The mounting clearances when installing the touch panel in an enclosure or cabinet shall be minimum of 4 inches from the top, bottom and sides and 1.72 inches from the rear.
- Derating – If EA9-T15CL is mounted off the vertical plane facing upward, the temperature shall be derated as shown below. Other panels may be mounted at any angle without derating consideration.

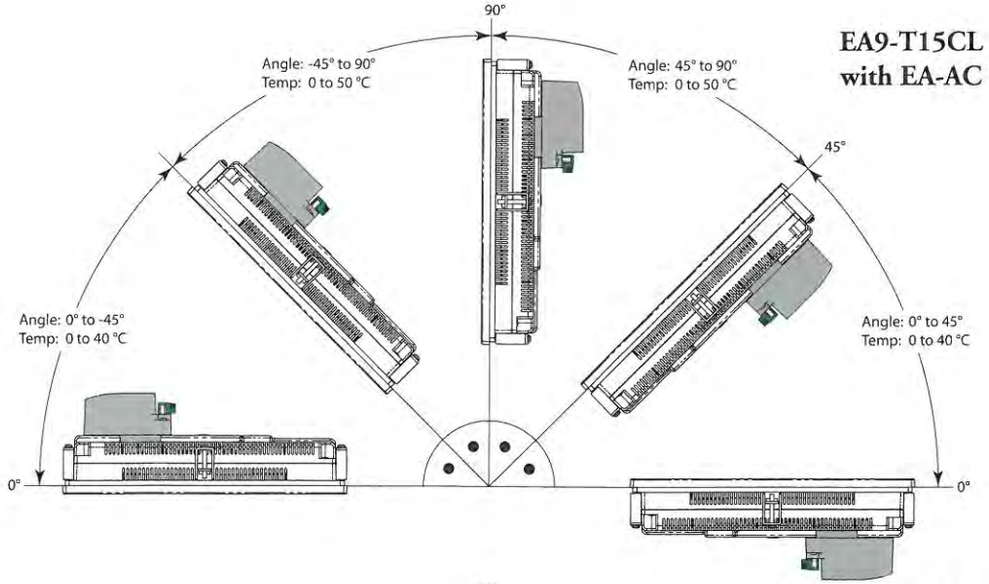

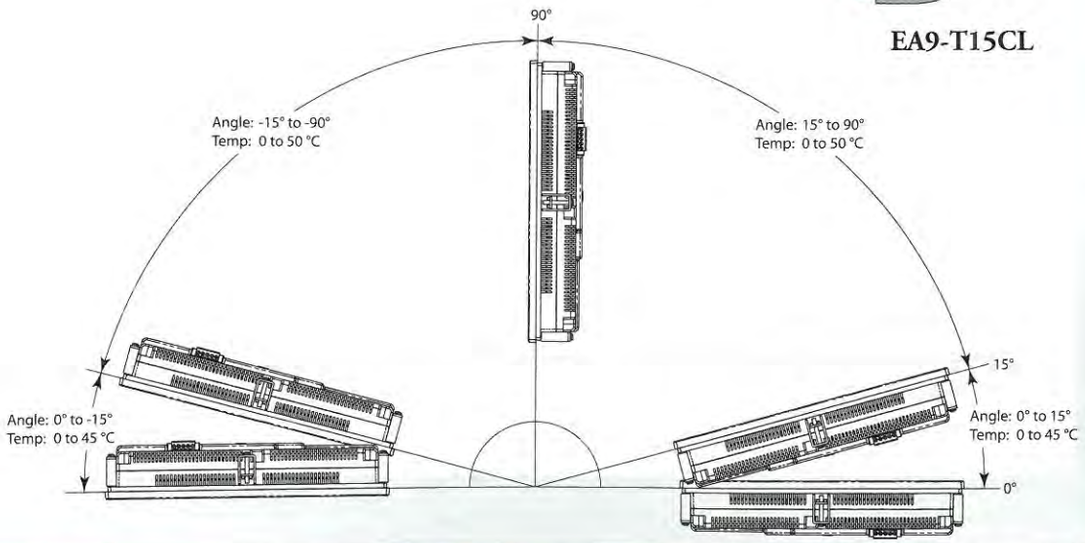

Specifications

Specification \ Model	6" TFT color w/ base features	6" TFT color w/ full features	8" TFT color w/ full features	10" TFT color w/ full features	12" TFT color w/ full features	15" TFT color w/ full features
Part Number	EA9-T6CL-R	EA9-T6CL	EA9-T8CL	EA9-T10CL	EA9-T12CL	EA9-T15CL
Display Actual Size and Type	5.7" TFT color		8.4" TFT color	10.4" TFT color	12.1" TFT color	15.0" TFT color
Display Viewing Area	4.54" x 3.40" [115.2 mm x 86.4 mm]		6.71" x 5.03" [170.4 mm x127.8mm]	8.31" x 6.24" [211.2 mm x 158.4 mm]	9.69" x 7.26" [246.0 mm x 184.5 mm]	11.97" x 8.98" [304.1 mm x 228.0 mm]
Weight	1.56 lb (710g)	1.59 lb (720g)	2.93 lb (1330g)	4.19 lb (1900g)	4.89 lb (2200g)	6.50 lb (2950g)
Screen Pixels	320 x 240 (QVGA)		800 x 600 (SVGA)			1024 x 768 (XGA)
Display Brightness	280 nits (typ)		310 nits (typ)	280 nits (typ)		
LCD Panel Dot Pitch	0.18 mm x 0.18 mm		0.213 mm x 0.213 mm	0.264 mm x 0.264 mm	0.3075 mm x 0.3075 mm	0.297 mm x 0.297 mm
Color Scale	65,536 colors					
Backlight Average Lifetime*	50,000 hours @ 25 °C					
Touch Panel Type	Four-wire analog resistive					
Project Memory	26 MB				82 MB	
Number of Screens	Up to 999 screens – limited by project memory					
Realtime Clock	Realtime Clock Built into panel, backed up for 30 days at 25°C					
Calendar - Month / Day / Year	Yes - monthly deviation 60 sec (Reference)					
Serial Port 1	15-pin D-sub female - RS232C, RS-422/485					
Serial Port 2	N/A	3-wire terminal block - RS-485				
Serial Port 3	N/A	RJ-12 modular jack - RS-232C				
USB Port - Type B	USB 2.0 High speed (480 Mbps) Type B - Download/Program					
USB Port - Type A	USB 2.0 High speed (480 Mbps) Type A -for USB device options					
Ethernet Port	N/A	Ethernet Port Ethernet 10/100 Base-T, auto MDI/MDI-X				
Audio Line Out	N/A	3.5 mm mini jack – requires amplifier and speaker(s)				
Mic In	N/A	3.5 mm mini jack				
SD Card Slot	1 slot supports max 2 GB (SD,) max 32 GB (SDHC)				2 slots support max 2 GB (SD,) max 32 GB (SDHC)	
HDMI Out	N/A				Yes	
Supply Power	10.2-26.4 VDC, or use the AC/DC Power Adapter, EA-AC, to power the touch panel from a 100-240 VAC, 50/60 Hz power source. Reverse Polarity Protected					
Power Consumption	16.0W 1.30A @ 12 VDC 0.66A @ 24 VDC		18.0W 1.50A @ 12 VDC 0.75A @ 24 VDC	18.0W 1.50A @ 12 VDC 0.75A @ 24 VDC	21.0W 1.75A @ 12 VDC 0.88A @ 24 VDC	29.0W 2.40A @ 12 VDC 1.20A @ 24 VDC
Internal Fuse						

Supply Power	10.2-26.4 VDC, or use the AC/DC Power Adapter, EA-AC, to power the touch panel from a 100-240 VAC, 50/60 Hz power source. Reverse Polarity Protected				
Power Consumption	16.0W 1.30A @ 12 VDC 0.66A @ 24 VDC	18.0W 1.50A @ 12 VDC 0.75A @ 24 VDC	18.0W 1.50A @ 12 VDC 0.75A @ 24 VDC	21.0W 1.75A @ 12 VDC 0.88A @ 24 VDC	29.0W 2.40A @ 12 VDC 1.20A @ 24 VDC
Internal Fuse (non-replaceable)	4.0A	6.3A			
Operating Temperature	0 to 50 °C (32 to 122 °F); Maximum surrounding air temperature rating: 50 °C (122 °F) IEC 60068-2-14 (Test Nb, Thermal Shock)				
Storage Temperature	–20 to +60 °C (–4 to +140 °F) IEC 60068-2-1 (Test Ab, Cold) IEC 60068-2-2 (Test Bb, Dry Heat) IEC 60068-2-14 (Test Na, Thermal Shock)				
Humidity	5–95% RH (non-condensing)				
Environment	For use in Pollution Degree 2 environment, no corrosive gases permitted				
Noise Immunity	NEMA ICS3-304 (EN61131-2) RFI, (145MHz, 440Mhz 10W @ 10cm) Impulse 1000V @ 1mS pulse EN61000-4-2 (ESD), EN61000-4-3 (RFI) EN61000-4-4 (FTB) EN61000-4-5 (Serge) EN61000-4-6 (Conducted) EN61000-4-8 (Power frequency magnetic field immunity)				
Withstand Voltage	1000 VAC, 1 min. (FG to Power supply)				
Insulation Resistance	> 10M ohm @ 500V DC (FG to Power supply)				
Vibration	IEC60068-2-6 (Test Fc)				
Shock	IEC60068-2-27 (Test Ea)				
Emission	EN55011 Class A (Radiated RF emission)				
Enclosure	NEMA 250 type 4/4X indoor use only UL50 type 4X indoor use only IP-65 indoor use only (When mounted correctly)				

Withstand Voltage	1000 VAC, 1 min. (FG to Power supply)
Insulation Resistance	> 10M ohm @ 500V DC (FG to Power supply)
Vibration	IEC60068-2-6 (Test Fc)
Shock	IEC60068-2-27 (Test Ea)
Emission	EN55011 Class A (Radiated RF emission)
Enclosure	NEMA 250 type 4/4X indoor use only UL50 type 4X indoor use only IP-65 indoor use only (When mounted correctly)
Agency Approvals	UL508, E157382 CE (EN61131-2), RoHS (2011/65/EU) CUL Canadian C22.2

**** NOTE: The backlight average lifetime is defined as the average usage time it takes before the brightness becomes 50% of the initial brightness. The lifetime of the backlight depends on the ambient temperature. The lifetime will decrease under low or high temperature usage.***

UL Satisfaction Ratings	
Model Number	***Input Ratings***
EA9-T6CL-R	12 - 24 VDC, Class 2, Maximum 16.0W
EA9-T6CL	
EA9-T8CL	12 - 24 VDC, Class 2, Maximum 18.0W
EA9-T10CL	
EA9-T12CL	12 - 24 VDC, Class 2, Maximum 21.0W
EA9-T15CL	12 - 24 VDC, Class 2, Maximum 29.0W
Terminal connecting wire size 12 - 24 AWG	
Connecting torque 71 - 85 oz-in (5 - 7 lbf-in) (0.5 - 0.6 Nm)	
Maximum surrounding air temperature rating, 50°C	
For use in Pollution Degree 2 environment	
All interface ports are intended to be directly connected to an isolated secondary circuit	
For use on a flat surface of a type 4X Indoor Use Only enclosure	

SOLAHD

www.solahd.com
(800) 377-4384 • (847) 268-6651
solahd.technicalservices@emerson.com

EMERSON.
Industrial Automation

Part Number: A272-067 Rev 14
January 2011

661-CM65-001-00R-R01

SOLAHD

Uninterruptible Power Systems

S1K Series

Instruction Manual

SOLAHD

MODÈLES S1K

Instructions importantes sur la sécurité

CONSERVEZ CES INSTRUCTIONS

Ce manuel contient des instructions importantes sur la sécurité, qui doivent être respectées lors de l'installation de l'UPS. Veuillez lire attentivement ce manuel avant de commencer à installer ou utiliser cet UPS.

Lire toutes les instructions sur la sécurité, l'installation et le fonctionnement avant d'utiliser l'UPS. Respecter tous les avertissements indiqués sur l'appareil et dans ce manuel. Suivre toutes les instructions d'utilisation et celles destinées à l'utilisateur.

Cet équipement est conçu pour un usage industriel ou commercial. Cet équipement peut être installé et utilisé par des personnes n'ayant reçu aucune formation préalable.

Cet équipement a été mis à l'essai et déclaré conforme aux limites prévues pour un appareil numérique de classe A, conformément à la partie 15 du règlement de la FCC. Ces limites ont pour but d'assurer une protection raisonnable contre une interférence nocive dans une installation industrielle. Cet équipement utilise, génère et peut émettre de l'énergie en radiofréquence et, s'il n'est pas installé et utilisé conformément aux directives, il peut causer un brouillage nuisible dans les communications radio. Cependant, il est impossible de garantir qu'aucune interférence ne se produira dans une installation particulière. Si cet équipement cause un brouillage de la réception de radio ou de télévision (que vous pouvez déterminer en éteignant puis en rallumant l'appareil), l'utilisateur est prié d'essayer d'éviter le brouillage au moyen de l'une ou de plusieurs des mesures suivantes :

- Réorienter ou déplacer l'antenne de réception.
- Éloigner davantage l'UPS du récepteur.
- Raccorder l'UPS à un circuit différent de celui du récepteur.
- Consulter le concessionnaire ou un technicien en radio / télévision qualifié pour obtenir de l'aide.

Définition des avertissements

AVERTISSEMENT indique une situation potentiellement dangereuse qui, si elle n'est pas évitée, peut causer la mort ou des blessures graves. **ATTENTION** indique une situation potentiellement dangereuse qui, si elle n'est pas évitée, peut causer des blessures légères ou modérées. Elle peut aussi être utilisée pour mettre en garde contre les pratiques non sécuritaires. **AVIS** est utilisé pour les messages qui ne concernent pas de blessures physiques.

Précautions de sécurité

⚠ AVERTISSEMENT :

- Afin d'éviter les risques d'incendie ou de décharge électrique, installer l'UPS dans une enceinte dont la température et l'humidité sont contrôlées, exempte de contaminants conducteurs, d'humidité, de liquides et gaz inflammables et de substances corrosives.
- Utiliser l'UPS seulement à partir d'une source d'alimentation en courant alternatif correctement mise à la terre.
- Pour réduire le risque d'électrocution, ne pas déplacer le couvercle, car il n'y a pas de parties remplaçables par l'utilisateur à l'intérieur (batterie incluse). Ne pas tenter d'effectuer l'entretien d'UPS; confier toutes les réparations à un technicien qualifié.
- Le risque d'électrocution hasardeux peut être expliqué par les parties à l'intérieur alimentées par la batterie de rechange, même lorsque l'alimentation en courant alternatif est déconnectée.
- Pour prévenir du risque d'électrocution, déconnectez UPS des principales sources avant d'installer le câble d'interface signal informatique. Reconnectez le cordon d'alimentation seulement après avoir vérifié que les connexions sont faites.
- Pour pallier au risque d'incendie, utilisez uniquement 26 AWG pour un cordon de télécommunication plus large (pour téléphone, ou connexions modem).
- Pour réduire le risque d'incendie, connectez uniquement au circuit mis à disposition, une protection contre la surtension de maximum 20A comme d'après le code national électrique, ANSI/NFPA 70.
- Pour réduire le risque d'incendie, remplacez uniquement avec un fusible de même type et de même classification.

Contents

1.0 Important Safety Instructions 4
1.1 Safety Precautions 4
1.2 Conditions of Use 5
2.0 System Description 6
2.1 Front & Rear Panels 6
2.2 Front & Rear Panel Descriptions 7
3.0 Preinstallation 8
3.1 Inspection 8
3.2 What's Included 8
3.3 Optional Accessories 8
4.0 Installation 8
4.1 Placement 8
4.2 Connect to Utility Power 8
4.3 Charge the Battery 8
4.4 Connect the Load 8
5.0 Operating Instructions 9
5.1 UPS Protected Output Outlets 9
5.2 Surge Protected Outlet Only 9
5.3 Switch On 9
5.4 Switch Off 9
5.5 Self-test 9
5.6 Green Mode 9
6.0 Alarms 10
6.1 Backup 10
6.2 Low Battery 10
6.3 Overload 10
7.0 Troubleshooting 11
8.0 Storage 11
8.1 Storage Conditions 11
8.2 Extended Storage 11
9.0 Software & Interface 12
9.1 Power Monitoring Software 12
9.2 Interface Kits 12
9.3 Remote Port 12
10.0 Specifications 13
11.0 Registration & Warranty 14
11.1 Product Registration 14
11.2 Warranty Information 14

While every precaution has been taken to ensure accuracy and completeness in this manual, EGS Electrical Group, LLC, assumes no responsibility, and disclaims all liability for damages resulting from use of this information or for any errors or omissions. The SolaHD and Emerson logos are registered in the U.S. Patent and Trademark Office. All other product or service names are the property of their registered owners. ©2011 EGS Electrical Group, LLC. All rights reserved. Specifications are subject to change without notice.

1.0 IMPORTANT SAFETY INSTRUCTIONS

SAVE THESE INSTRUCTIONS

Congratulations on your choice of the SolaHD S1K Series Uninterruptible Power System (UPS).

This manual contains important safety instructions that should be followed during the installation and maintenance of the UPS. Please read this manual thoroughly, including all safety, installation, and operating instructions before attempting to install or operate this UPS. Please adhere to all warnings on the unit and in this manual and follow all operating and user instructions.

This equipment is designed for industrial or commercial use and can be installed and operated by individuals without previous training.

This equipment has been tested and found to comply with the limits for a Class A digital device, pursuant to part 15 of the FCC Rules. These limits are designed to provide reasonable protection against harmful interference in an industrial installation.

1.1 Safety Precautions

⚠ WARNING

- To prevent the risk of fire or electric shock, install the UPS in a temperature and humidity controlled room, free of conductive contaminants.
- Operate the UPS only from a properly grounded (earthed) ac supply.
- To reduce the risk of electric shock, do not remove the cover, as it has no user-serviceable parts inside (including the battery). For service, contact a qualified technician.

  NOTE: Some components are live, even when ac power is disconnected.
- To reduce the risk of fire, use the proper rating when replacing the fuse.

⚠ CAUTION

Although your UPS has been designed and manufactured to ensure personal safety, improper use can result in electrical shock or fire. To ensure safety, please observe the following rules:

- Turn off the UPS and disconnect the ac supply before cleaning. Do not use liquid or aerosol cleaners; a dry cloth is recommended to remove dust from the surface of your UPS.
- Do not install or operate your UPS in or near water.
- Do not place the UPS on an unstable cart, stand, or table.

- Do not place the UPS under direct sunlight or close to heat emitting sources.
- To allow proper ventilation of the UPS, do not block or cover the top and/or bottom sides of the unit.
- Do not place the UPS power cord in any area where it may get damaged by heavy objects.
- Follow all warnings and instructions marked on the UPS. Do not attempt to service the UPS, as it has no user-serviceable parts inside
- Do not dispose of batteries in a fire; they may explode.
- Do not open or damage the battery. Released electrolyte is harmful to the skin and eyes and may be toxic.
- The battery can present a risk of electrical shock and high short-circuit current.
- To reduce the risk of fire, connect only to a circuit provided with 20 A maximum branch circuit overcurrent protection in accordance with the National Electrical Code, ANSI/NFPA 70.

⚠ ATTENTION

Turn off and unplug your UPS from the outlet and contact SolaHD Technical Support at (800) 377-4384 if

- the power cord or plug is damaged;
- liquid has been spilled on the UPS;
- the fuse blows frequently;
- the UPS does not operate even when the user follows the operating instructions.

1.2 Conditions of Use

- The input receptacle must be within 6 feet (1.8 meters) of the UPS.
- Your UPS provides conditioned power to connected equipment. Maximum load must not exceed that shown on the UPS rating label. If uncertain, consult your distributor or SolaHD Technical Support at (800) 377-4384.
- Placing magnetic storage media on top of the UPS may result in data corruption.

2.0 System Description

2.1 Front & Rear Panel

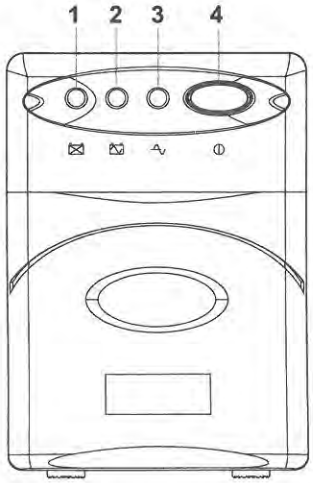

S1K650, S1K850, S1K1200

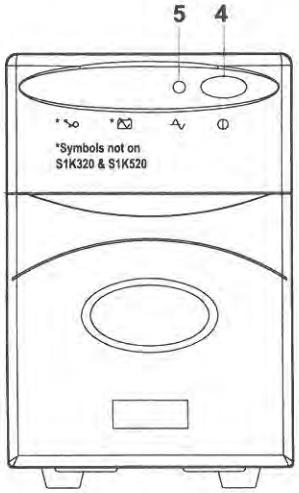

S1K320, S1K520, S1K1500

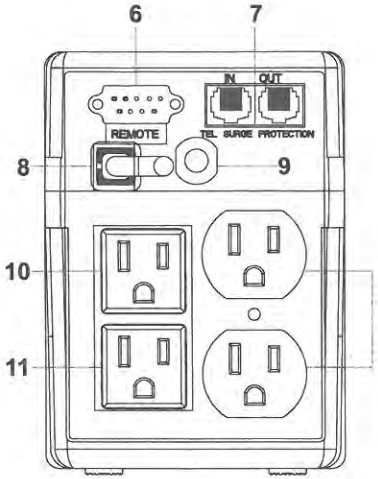

S1K320–S1K1200

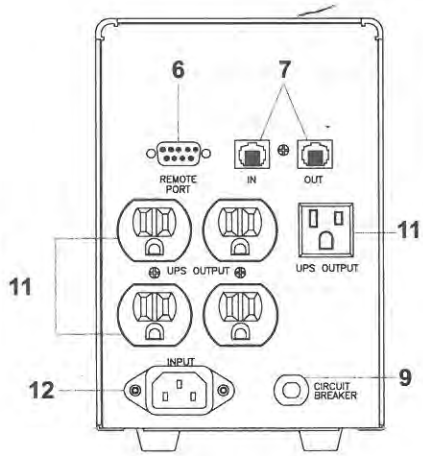

S1K1500

2.2 Front & Rear Panel Descriptions

For Models S1K650, S1K850, and S1K1200:

1. Battery Fault indicator (red LED): The red LED illuminates when the UPS battery is no longer useful.

   ⚠ **CAUTION:** Do not attempt to open the UPS or replace the battery; call SolaHD Technical Support at (800) 377-4384.

2. Backup indicator (yellow LED): The yellow LED illuminates when the UPS is supplying battery power to the loads.
3. Line Normal indicator (green LED): The green LED illuminates when the line input voltage is normal.

For All Models:

4. On/Off/Test button: Press the button for more than 1 second to turn the UPS on; press for more than 2 seconds to turn the UPS off. Press the button for less than 1 second to activate the UPS self-testing.

For Models S1K320, S1K520, and S1K1500:

5. LED indicator: The LED indicator indicates the UPS status. The indicator is illuminated continuously when the UPS is supplying utility power to the loads. The indicator flashes slowly (about once every 2 seconds) when the UPS is supplying battery power to the loads. The indicator flashes rapidly (about once every half second) when the loads connected to the UPS exceed capacity.

For All Models:

6. Remote Port (computer interface): Provides both RS-232 and relay signals to support Windows applications and other OS compatible solutions. Please refer to "9.3 Remote Port" for details.
7. Tel/Surge Protection (In/Out): Provides surge suppression for telephones and modems.

For Models S1K320, S1K520, S1K650, S1K850, and S1K1200:

8. Ac input power cord

For All Models:

9. Circuit Breaker: Provides protection from ac overload and short-circuit current.
10. Surge protected outlet only (white)
11. UPS protected output outlets (black)

For Model S1K1500:

12. Ac input receptacle

3.0 Preinstallation

3.1 Inspection

Inspect the UPS upon receipt. Damage that may have occurred in transit is not covered under the warranty. If shipping damage is present, please contact your local carrier and SolaHD distributor immediately.

NOTE: The packaging material is recyclable. Please reuse or dispose of it in a responsible manner.

3.2 What's Included

- CD with UPSMON monitoring software
- Instruction Manual
- (1) DB-9 RS-232 cable
- (1) RJ-45 cable

3.3 Optional Accessories

- S1K-PMBRK Wall/panel mount bracket kit (Not applicable for Models S1K650 and S1K1500)

4.0 Installation

4.1 Placement

Install the UPS in a protected area with adequate airflow and free of excessive dust. Do not operate the UPS outdoors.

4.2 Connect to Utility Power

To power up the UPS, connect the ac input connector to utility power.

4.3 Charge the Battery

The UPS charges its battery whenever it is connected to utility power. For best results, charge the battery for 4 hours before initial use.

4.4 Connect the Loads

Connect the loads to the UPS protected output outlets on the rear of the UPS.

5.0 Operating Instructions

5.1 UPS Protected Output Outlets

The output outlets will provide protection from surges and power failures. Plug your computer, monitor, and other "data critical" devices into these outlets.

5.2 Surge Protected Outlet Only

The surge protected outlet can offer protection against surges and transients typically caused by lightning or disruptive loads in the building. In the event of utility power failure, this outlet will not provide backup power to the load. Utilize this outlet with less critical devices such as printers, scanners, fax machines, or external speakers.

5.3 Switch On

With the UPS plugged in, press and hold the On/Off/Test button for more than 1 second until the Line Normal LED is lit. The UPS will perform self-testing each time it is switched on.

5.4 Switch Off

Press and hold the On/Off/Test button for more than 2 seconds until the Line Normal or Backup LED turns off.

5.5 Self-test

Use the self-test function to verify both the operation of the UPS and the condition of the battery. In normal utility power, press the On/Off/Test button for less than 1 second to perform a self-test function. During the self-test, the UPS runs in Backup Mode. If the UPS passes the self-test, it returns to Line Normal operation.

5.6 Green Mode

If a load of <20 watts is connected to the UPS and the ac power fails or is disconnected, the UPS will enter the Green Mode. At this time, the green LED on the front panel will flash every 3 to 5 seconds. After approximately 3 minutes, the UPS will shut down, preventing a deep discharge of the battery. The UPS will return to Line Normal operation when ac power returns.

If the UPS is in the Battery Backup Mode and the load is decreased to <20 watts, the UPS will again enter the Green Mode and will shut down within 3 minutes. Application of ac power will return the UPS to Line Normal operation.

If the Green Mode of operation is not desired, it can be disabled by holding down the On/Off/Test button until two beeps are heard. The Green Mode will be disabled and will remain in this mode until the UPS is turned off.

6.0 Alarms

6.1 Backup (slow beeping)

For Models S1K650, S1K850, and S1K1200:

When in Backup Mode, the yellow LED illuminates and the UPS sounds an audible alarm. The alarm stops when the UPS returns to Line Normal operation.

For Models S1K320, S1K520, and S1K1500:

When in Backup Mode, the green LED flashes slowly and the UPS sounds an audible alarm. The alarm stops when the UPS returns to Line Normal operation.

6.2 Low Battery (rapid beeping)

For All Models:

In Backup Mode when the battery energy runs low, the UPS beeps rapidly until the UPS shuts down from battery exhaustion or returns to Line Normal operation.

6.3 Overload (continuous alarm)

For Models S1K650, S1K850, and S1K1200:

When the UPS is overloaded, it sounds a continuous alarm. Remove non-critical loads from the UPS protected output outlets to eliminate the overload.

For Models S1K320, S1K520, and S1K1500:

When the UPS is overloaded, it sounds a continuous alarm and the green LED flashes rapidly. Remove non-critical loads from the UPS protected output outlets to eliminate the overload.

7.0 Troubleshooting

TABLE 1: TROUBLESHOOTING		
PROBLEM	**CAUSE**	**SOLUTION**
UPS is not on; green LED will not illuminate	UPS is off or On/Off/Test button was not pushed long enough	Press the On/Off/Test button for more than 2 seconds
	Battery voltage is less than 10 V (20 V for S1K1500)	Recharge the UPS for at least 4 hours. If it still does not start, check the input fuse.
	Other failure	Call SolaHD Technical Support
	Load less than 20 W in Backup Mode	Normal condition
UPS is always in Backup Mode	Power cord is loose	Plug in the power cord
	Input ac power is not available	Check fuses/breakers
	Other failure, PCB, etc.	Call SolaHD Technical Support
	Line voltage too high, too low, or blackout	Normal condition
Backup time is too short	Battery is not fully charged	Recharge the UPS for at least 4 hours
	Other failure	Call SolaHD Technical Support
Continuous beep	Overload condition	Remove the non-critical loads
Red LED is illuminated	Battery failure	Call SolaHD Technical Support
TECHNICAL SUPPORT		
For further assistance, please contact SolaHD Technical Support at (800) 377-4384/(847) 268-6651 or by e-mail at solahd.technicalservices@emerson.com.		

8.0 Storage

8.1 Storage Conditions

NOTE: Before storing, charge the UPS for at least 4 hours.

Store the UPS covered and upright in a cool, dry location with its battery fully charged. Remove any accessories from the accessory slot and disconnect any cables connected to the Remote Port to avoid unnecessary draining of the battery.

8.2 Extended Storage

During extended storage in environments where the ambient temperature is -15°C to +30°C (+5°F to +86°F), charge the UPS battery every 6 months.

During extended storage in environments where the ambient temperature is +30°C to +45°C (+86°F to +113°F), charge the UPS battery every 3 months.

9.0 Software & Interface

9.1 Power Monitoring Software

UPSMON software (or other power monitoring software) utilizes a standard RS-232 interface to perform monitoring functions and an orderly shutdown of the protected equipment in the event of power failure. UPSMON displays all the diagnostic symptoms on the monitor, including voltage, frequency, and battery levels. UPSMON is available for Windows applications and other OS compatible solutions. Please contact SolaHD Technical Support for more information.

9.2 Interface Kits (optional)

Interface kits include a required interface cable to convert status signals from the UPS into signals which an individual operating system will recognize. The interface cable must be connected to the Remote Port on the rear panel of the UPS and to the host computer (either COM 1 or COM 2). Refer to the "READ.ME" file for further instructions.

9.3 Remote Port (computer interface)

The Remote Port on the rear panel of the UPS may be connected to a host computer to allow for UPS status monitoring and operation control. Functions include: broadcasting a warning when power fails, closing any open file before the batteries are exhausted, and turning off the UPS.

TABLE 2: REMOTE PORT PIN CONFIGURATIONS

PIN	SIGNALS DESCRIPTION
2	Transmitted data (TD) RS-232
3	Received data (RD) RS-232 remote shutdown. The UPS will shut down when a high RS-232 level is sustained on PIN 3 for 0.5 seconds. **NOTE: This feature is not applicable for Models S1K320 & S1K520.**
4	Data terminal ready (DTR) +12 V
5	Signal ground
6	Ac failure. PIN 6 generates a high to low signal when there is an input line failure. PIN 6 is an open collector output that must be pulled up to a common referenced supply no greater than +40 V dc. The transistors are capable of a maximum load of 25 mA; only PIN 5 can be used as the common. **NOTE: Models S1K320 and S1K520 are designed without open collector signals.**
7	Request to send (RTS) -12 V
8	Battery low. PIN 8 generates a high to low signal when the internal battery of the UPS has less than 5 minutes of backup time remaining. PIN 8 is an open collector output that must be pulled up to a common referenced supply no greater than +40 V dc. The transistors are capable of a maximum load of 25 mA; only PIN 5 can be used as the common. **NOTE: Models S1K320 and S1K520 are designed without open collector signals.**
9	Transmitted data (TD) RS-232
NOTES	
(1) Switch rating is +40 V dc, 25 mA non-inductive. (2) PIN 5 should be connected to signal ground only. (3) Models S1K650, S1K850, S1K1200, and S1K1500 provide open collector signals.	

10.0 Specifications

TABLE 3: TECHNICAL SPECIFICATIONS

PARAMETERS	MODEL					
	S1K320	S1K520	S1K650	S1K850	S1K1200	S1K1500
Capacity, VA/W	320/240	520/360	650/390	850/600	1200/720	1500/900
INPUT						
Voltage (Single phase)	115 V ±25%		115 V ±20%			115 V ±25%
Frequency	50 or 60 Hz ±10% (auto sensing)					
OUTPUT						
Voltage (on battery)	Step sine wave at 115 V					
	±10%		±5%			
Frequency (on battery)	50 or 60 Hz					
	±0.3 Hz					±1 Hz
Transfer Time	4 ms typical					
Auto Voltage Regulation (AVR function under Normal Mode)	AVR automatically increases output voltage 15% above input voltage if 91% to 75% of nominal is detected. AVR decreases output voltage 13% below input voltage if +9% to +25% of nominal is detected.		AVR not available			AVR automatically increases output voltage 15% above input voltage if 91% to 75% of nominal is detected. AVR decreases output voltage 13% below input voltage if +9% to +25% of nominal is detected.
PROTECTION						
Unit Input	Fuse or circuit breaker for overload & short circuit protection					
Overload Protection	UPS automatically shuts down if overload exceeds 105% of nominal at 20 seconds, 120% at 10 seconds, 130% at 3 seconds.					UPS automatically shuts down if overload exceeds 110% of nominal at 60 seconds, 130% at 3 seconds.
Short Circuit	UPS output cuts off immediately or input fuse protection					
ENVIRONMENT						
Operating Temperature	0°C to +40°C					
Humidity	0 to 95% non-condensing					
Maximum Elevation	10,000 ft. (3,000 m)					
Audible Noise	<40 dBA (1 m from surface)					
PHYSICAL						
Dimensions, in. (mm) W x D x H	3.8 (97) x 12.6 (320) x 5.3 (135)	3.8 (97) x 12.6 (320) x 5.3 (135)	3.8 (97) x 10.4 (265) x 5.3 (135)	3.8 (97) x 12.6 (320) x 5.3 (135)	3.8 (97) x 12.6 (320) x 5.3 (135)	5.11 (130) x 15.0 (382) x 7.5 (192)
Net Weight, lb. (kg)	12.4 (5.6)	14.3 (6.5)	8.1 (3.7)	10.8 (4.9)	10.8 (4.9)	30.0 (13.6)
BATTERY						
Type	Sealed, maintenance-free, lead acid batteries					
Typical Recharge Time	4 hr.			6 hr.		
Backup Time	See Table 4 on page 14					
AGENCY APPROVALS						
Safety	UL 1778, cULus Listed, FCC Part 15, Subpart B, Class A					

TABLE 4: TYPICAL BATTERY BACKUP TIMES						
LOAD	MODEL					
	S1K320	S1K520	S1K650	S1K850	S1K1200	S1K1500
BACKUP TIMES (HR:MIN:S)						
10%	02:18:00	01:35:00	01:36:00	00:54:00	00:45:00	01:16:15
20%	01:03:30	00:42:00	00:58:00	00:30:00	00:27:00	00:28:00
30%	00:35:45	00:21:00	00:36:00	00:21:00	00:19:00	00:12:30
40%	00:22:30	00:12:30	00:20:00	00:17:00	00:14:00	00:07:30
50%	00:15:00	00:08:00	00:14:00	00:11:00	00:08:00	00:04:30
60%	00:11:45	00:06:00	00:10:00	00:08:00	00:05:00	00:04:30
70%	00:08:15	00:04:30	00:08:00	00:05:30	00:04:30	00:02:15
80%	00:06:00	00:03:30	00:06:00	00:05:00	00:03:30	00:01:45
90%	00:04:45	00:02:15	00:04:00	00:04:00	00:02:00	00:01:30
100%	00:04:00	00:01:45	00:03:00	00:03:00	00:01:30	00:01:00
NOTES						
Backup times are based on a fully charged battery						

11.0 Registration & Warranty

11.1 Product Registration

To register your product for updates and information on service and support, visit our Web site at: http://www.solahd.com/support/registration.htm.

11.2 Warranty Information

Please see the "Terms & Conditions of Sale".

ATTACHMENT 3

Vent Well System Start-up

ARCADIS Design & Consultancy for natural and built assets

Vent Well System Startup Sequence

La Jolla Spring Cave Complex
Stanton, Missouri

When arriving to the control building there are a few steps that need to be taken to insure a successful startup of the system. Verify that power is present at the control building by viewing the transfer switch display screen. Inspect the VFD Enable Button on the front door of the Motor Control Electrical Panel. If the lighted pushbutton is not illuminated pull the button to energize the enable circuit. Go to the Main Control Panel and start with visually inspecting the alarm screens to view what alarm may be present on the system. Once you have identified all alarms that are active, depress the alarms Acknowledge pushbutton on the screen.

ALARM SCREEN

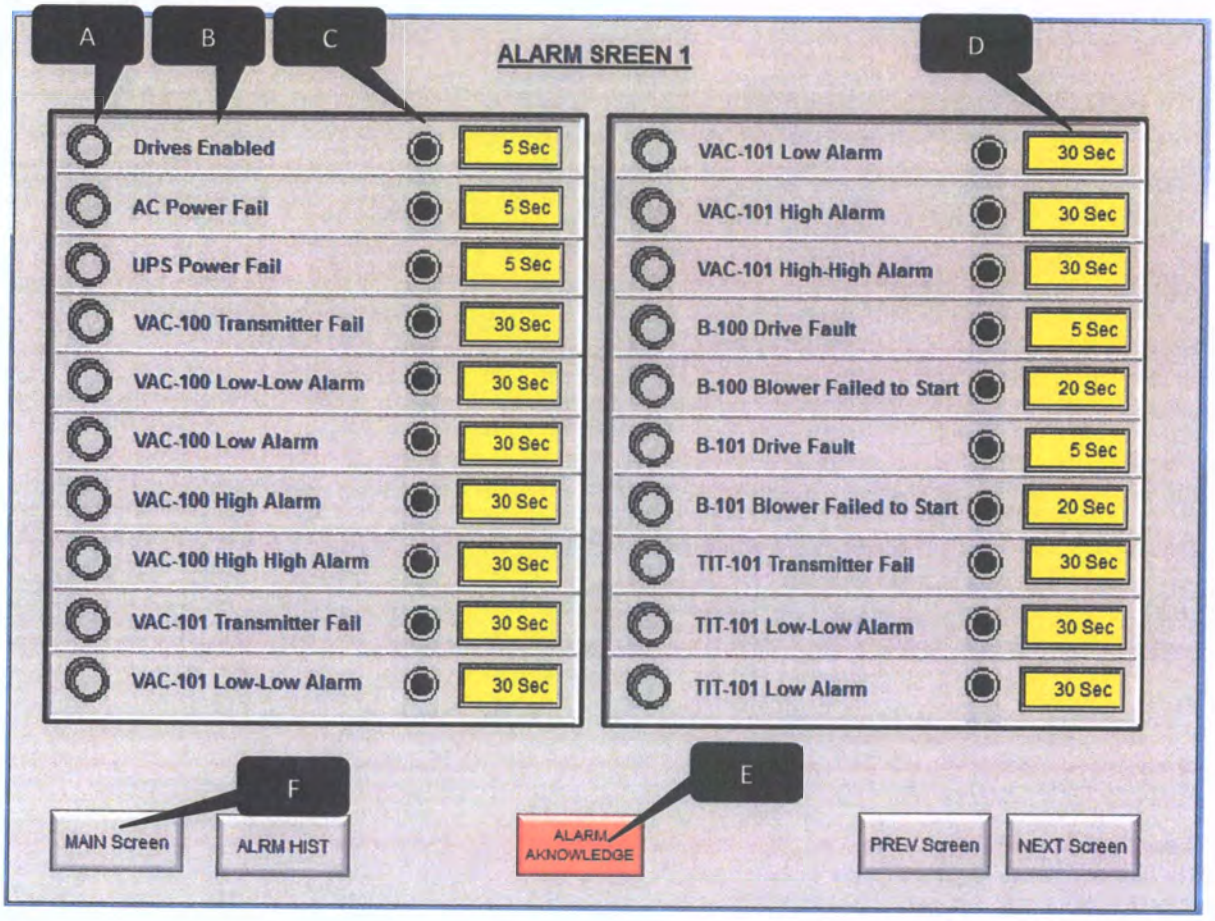

A. This is an alarm Light and will be GRAY when normal and RED when in Alarm.

B. Alarm description will be BLACK text when normal and RED text when in alarm.

C. this is the Alarm Enable Radio Button. This will be solid filled BLACK when the alarm is Enabled and will be an empty CIRCLE when Alarm is DIS-ABLED.

D. This is the Operator Adjustable Alarm Timer. Allows the length in time a condition must exist before becoming an Alarm Event and being emailed to group in notification addresses.

E. Pushbutton to Acknowledge Alarms.

F. Go To Main Screen.

MAIN SCREEN

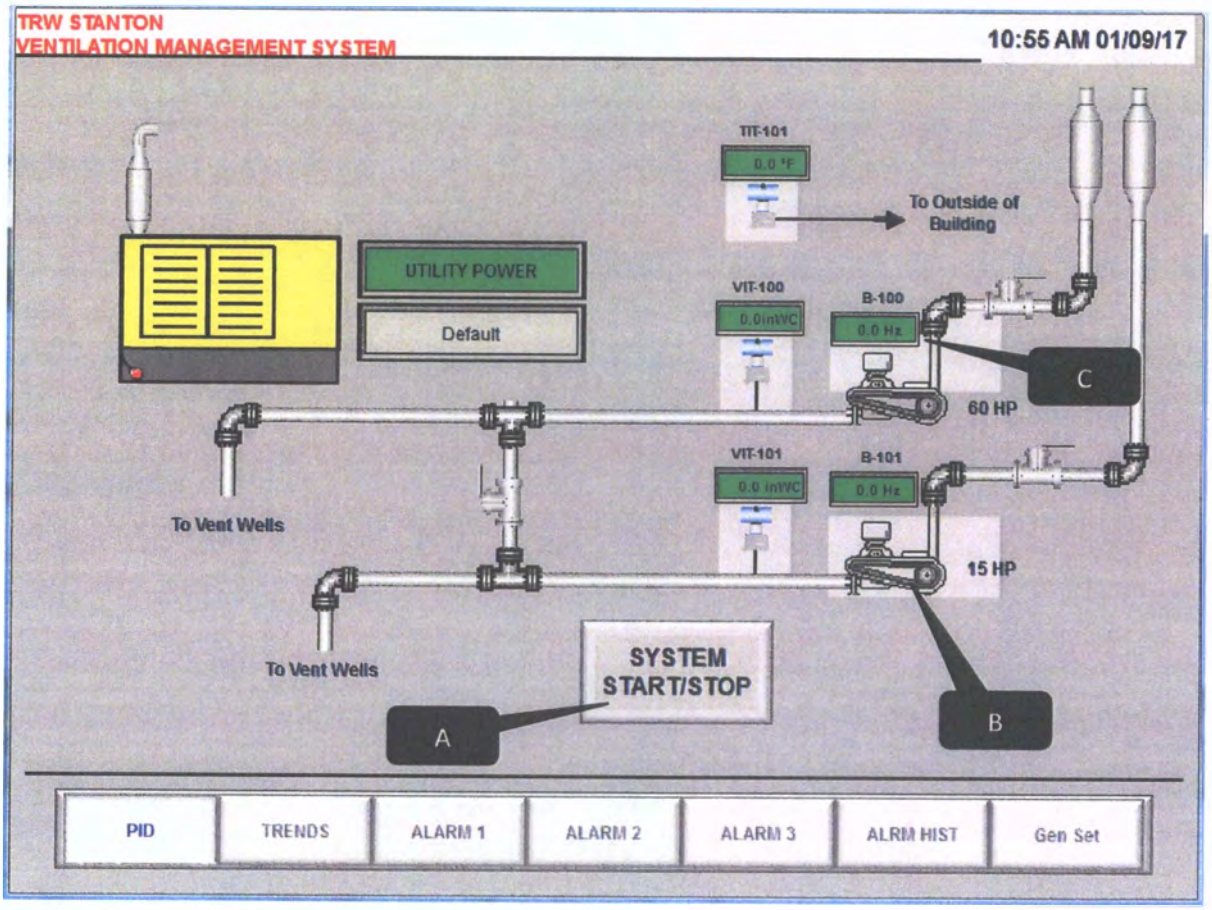

A. Pushbutton to Start System.

B. Both Blower Symbols will bring a pop-up on the screen for selecting Hand-Off-Auto and speed source.

C. All Transmitter symbols will bring a pop-up on the screen for entering the alarm setpoints for that device. As in High-High, High, Low, Low-Low.

START/STOP POP-UP

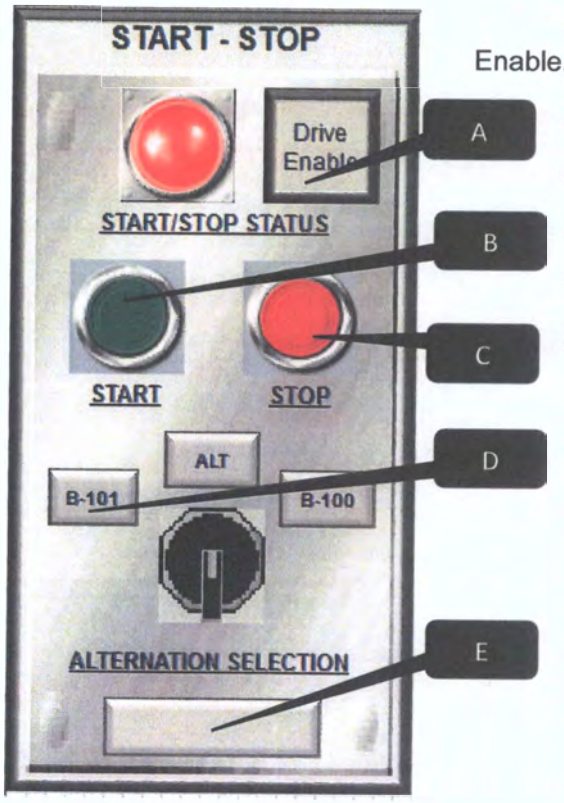

A. Drive Enable pushbutton for remote reset of Enable.

B. Start pushbutton- Start Blower in Lead.

C. Stop pushbutton- Stop Blower.

D. Select sequence desired, B-101 Lead, Alternate, B-100 Lead

E. Close Window pushbutton.

Motor Control

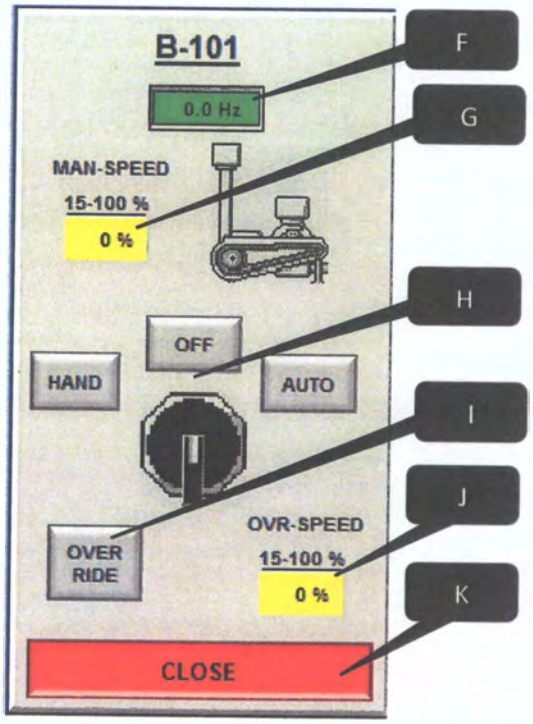

F. Speed of the VFD Hertz.

G. Manual Speed in percent when in Hand Mode.

H. Selection for Hand, Off, Auto operation.

I. When in Auto, Over-ride will be operator adjustable. Select this to place system in override.

J. Selected override speed.

K. Close Window pop-up.

Transmitter Alarm Set Points

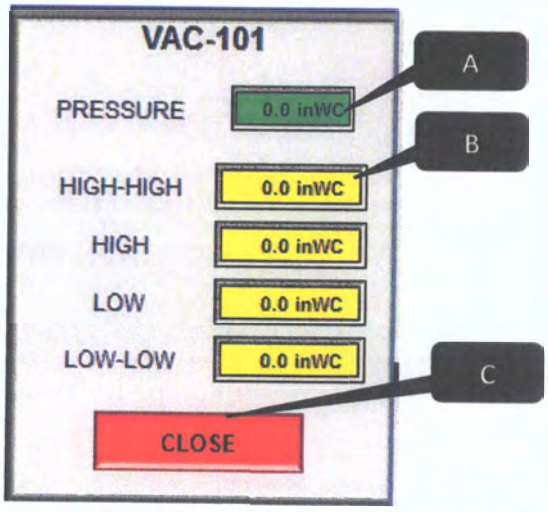

A. Scaled transmitter Value.

B. Operator Entry for Alarm Set Points.

C. Close the Window Pop-up.

Trends Screen

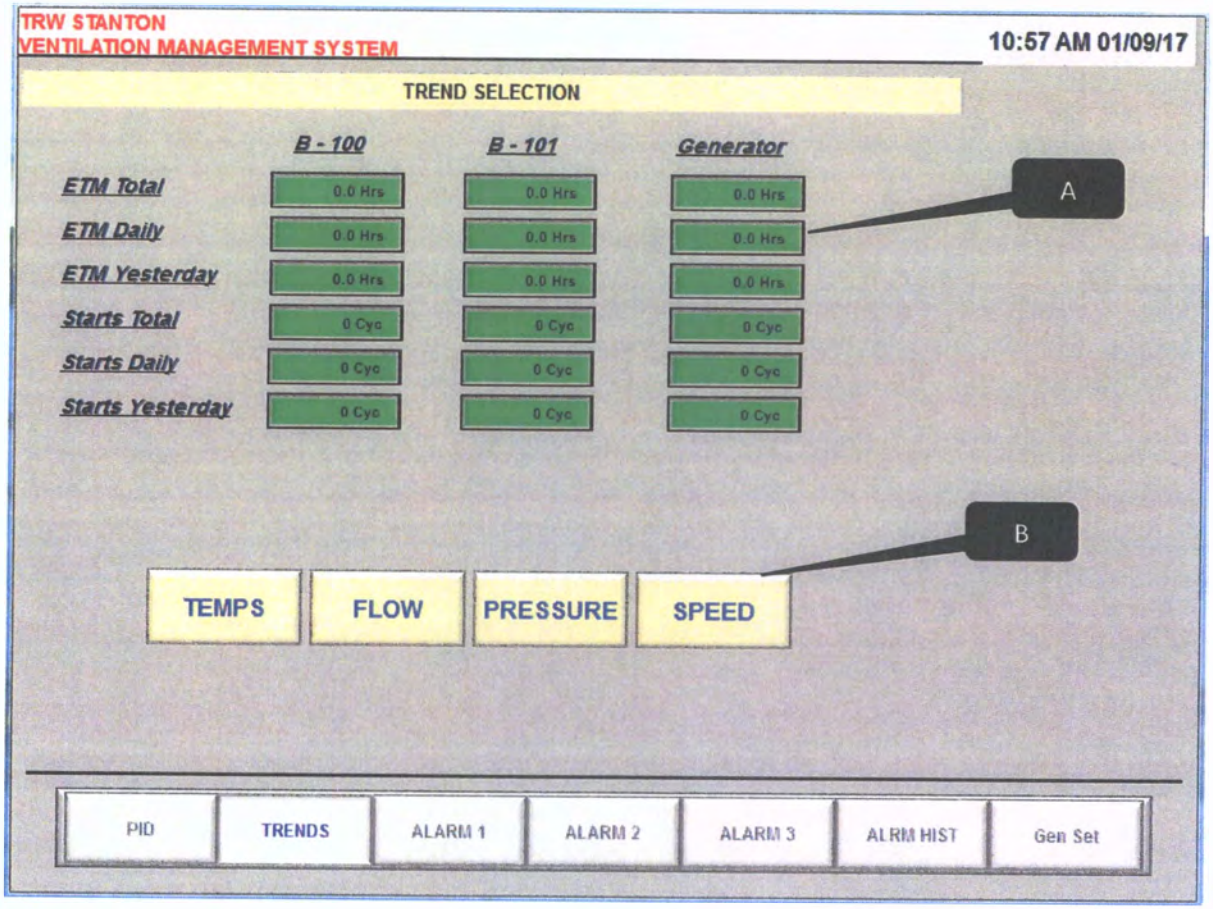

A. Generator and blower run times are summarized here.
B. Graphs of temperature, estimated flow, vacuum, and blower speeds .

Generator Status

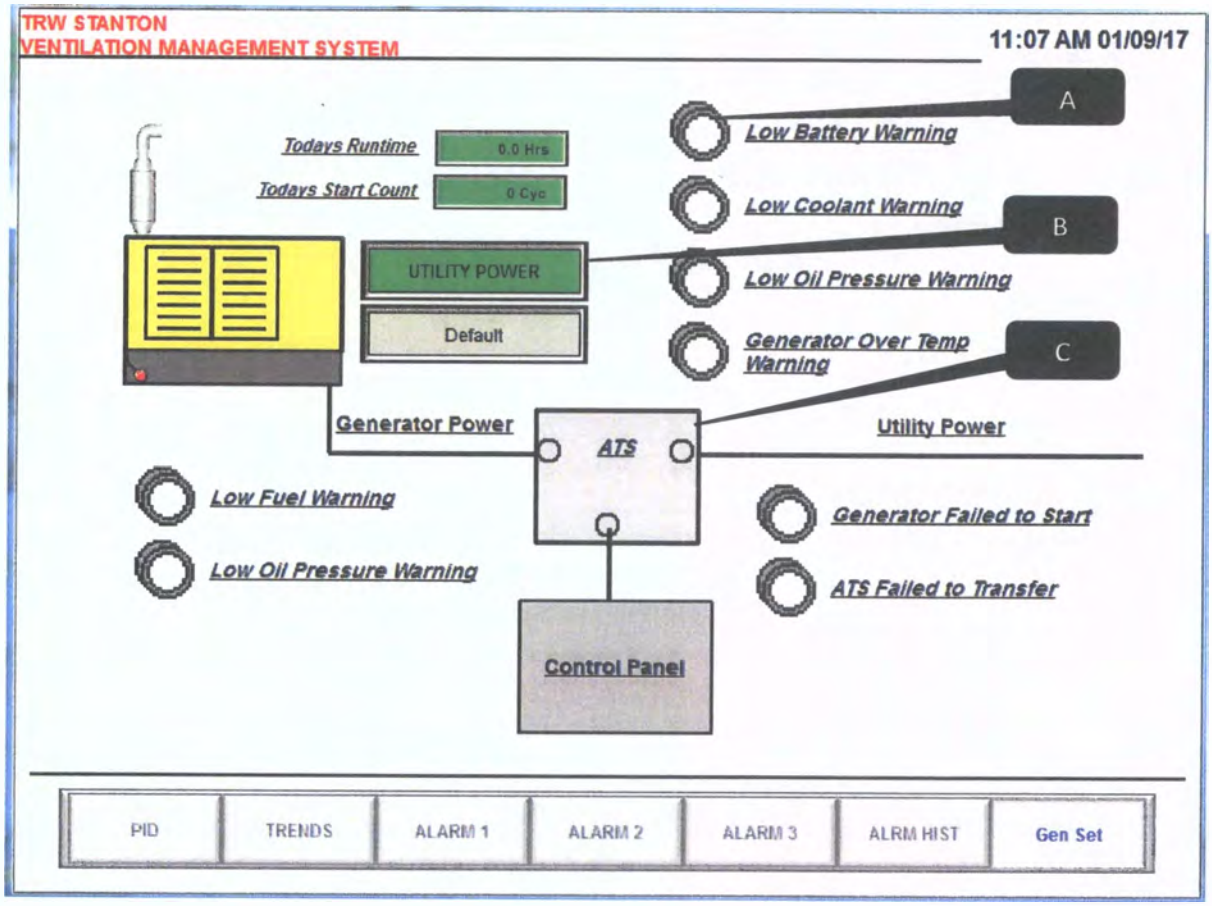

A. Generator alarms shown here. Red when in alarm condition
B. Power source currently shown is displayed here.
C. Transfer switch has red line drawn over it connecting either the generator or utility power to the control panel. Visual representation of current power source used by the system.

Temperature Controls

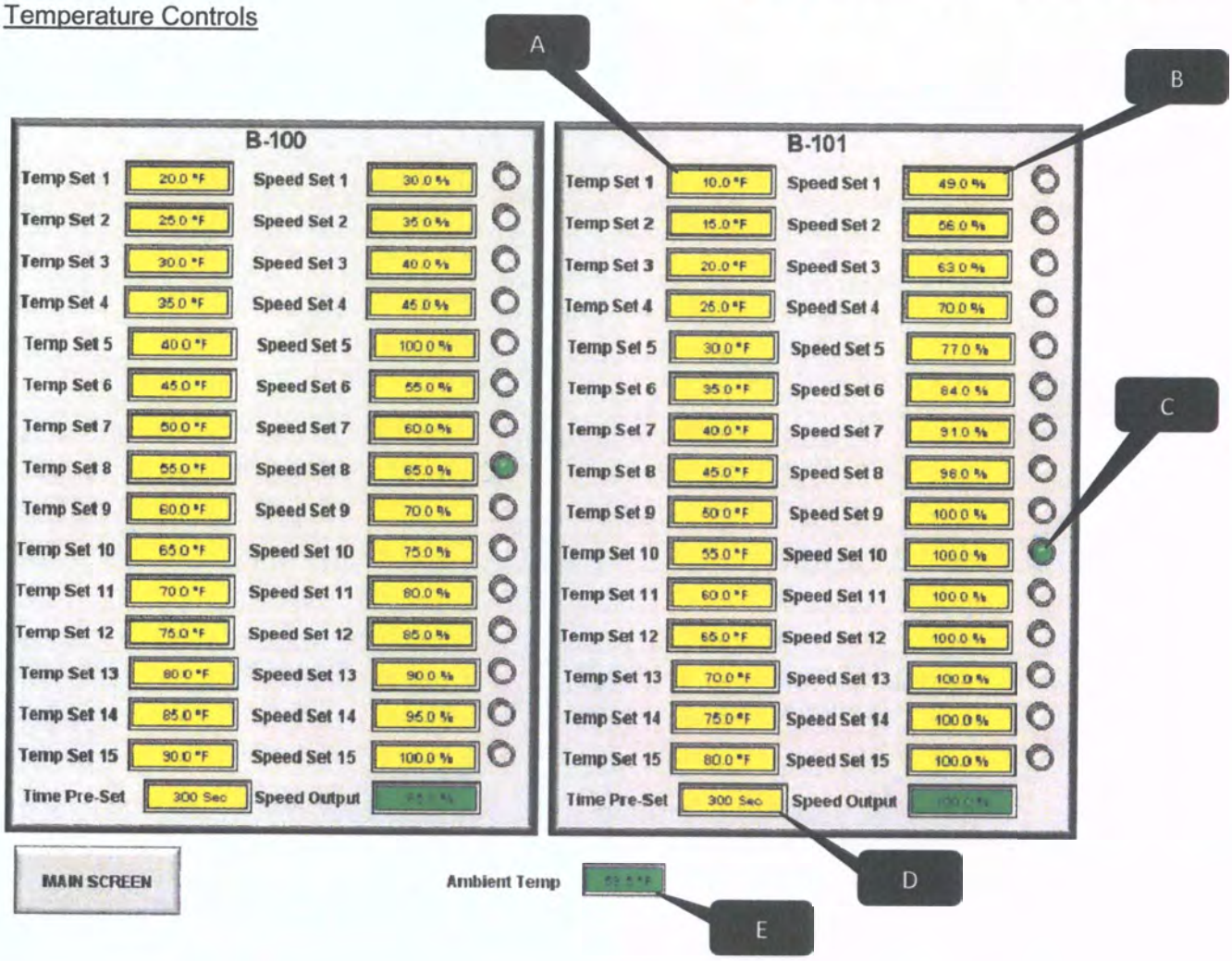

A. Starting temperature for selected speed. Temp Set 1 value through Temp Set 2 value will be the temperature ranges for Speed Set 1 blower speed setting. Verify these are set as intended for both blowers
B. Speed Set 1 is the blower speed setting for Temp Set 1 to Temp Set 2. Verify these speed settings are set as intended for both blowers.
C. The circle lit green is the current temperature interval the blower(s) are operating at.
D. The Time Pre-Set determines how long of a delay will exist before switching speed settings. The default pre-set is 5 minutes (300 seconds).
E. Current ambient temperature displayed. Verify this matches the selected range of operation above.

Once all screens of the control panel have been viewed, alarms addressed, and blower settings set to desired settings, the system should be ready for start up. Check the generator for any alarms displayed and place the generator in Auto.

ATTACHMENT 4

System Maintenance and Inspection Form

Vent Well System
System Maintenance and Inspection
TRW Automotive
La Jolla Spring Cave Complex
Stanton, Missouri

ARCADIS Design & Consultancy for natural and built assets

Inspection Date _____	Observation
Any air leaks you can hear in the above ground piping?	
Anemometer reading at VW-1	
CFM at VW-1 (ft/min*1.554 ft^2)	
Anemometer reading at VW-2	
CFM at VW-1 (ft/min*1.554 ft^2)	
Vacuum at B-101 (15 hp blower)	
Alarms on PLC screen?	
Any debris blocking discharge stacks?	
Any treatment building maintenance needs?	
Access road conditions:	
Describe ruts/down trees/access concerns	

Maintenance Conducted During Trip should be recorded in Maintenance and Repair Log for Site

Comments:

APPENDIX B

Air Controls Operation and Maintenance

B-2 GAC Water Treatment O&M

ARCADIS Design & Consultancy for natural and built assets

TRW Automotive

OPERATION AND MAINTENANCE FOR GRANULAR ACTIVATED CARBON WATER TREATMENT SYSTEM

La Jolla Spring Cave Complex

1135 Highway W

Stanton, Missouri

August 1, 2018

OPERATION AND MAINTENANCE FOR GRANULAR ACTIVATED CARBON WATER TREATMENT SYSTEM

Royce Face, P.E.
Principal Design Engineer
Missouri Registered Engineer No. PE-2006029699

John Shonfelt, P.G.
Principal/Senior Project Manager

Prepared for:

TRW Automotive.

1135 Hwy W

Stanton, Missouri

Prepared by:

Arcadis U.S., Inc.

Rosehill Office Park 1

8725 Rosehill

Suite 350

Lenexa

Kansas 66215

Tel 913 492 0900

Fax 913 492 0902

Our Ref.:

KC001590.0006

Date:

August 1, 2018

OPERATION AND MAINTENANCE FOR GRANULAR ACTIVATED CARBON WATER TREATMENT SYSTEM

CONTENTS

1 INTRODUCTION 1

1.1 Background 1

1.2 Objective 1

2 GAC WATER TREATMENT system operations 1

2.1 System Objective 1

2.2 System Components 2

2.2.1 Bag Filter 2

2.2.2 GAC Units 2

2.2.3 Pressure Gauges 2

2.2.4 Hoses and Connections 2

2.2.5 Operational Procedures and Troubleshooting 2

3 Routine Maintenance Activities and Procedures 3

3.1 Monthly O&M Activities 3

3.2 Semi-annual O&M Activities 3

3.3 Annual O&M Activities 3

3.4 As-needed O&M Activities 4

ATTACHMENTS

Attachment 1. Treatment System PID

Attachment 2. Equipment Specification Sheets (on CD)

Attachment 3. Equipment Operating and Maintenance Manuals (on CD)

Attachment 4. Bag Filter Change Out Directions

Attachment 5. System Maintenance and Inspection Forms

1 INTRODUCTION

1.1 Background

This Operation and Maintenance (O&M) Manual details the operation and maintenance activities to be performed at the Granular Activated Carbon (GAC) water filters located at 1135 Hwy W (Site) in Sullivan, MO.

This O&M Manual includes the following site-specific information necessary for operation of the System:

- Description of the System;
- System operation procedures;
- System O&M activities and frequency;
- System monitoring;
- Health and Safety (H&S) procedures for O&M activities; and
- Recording and recordkeeping procedures.

1.2 Objective

The objective of this O&M Manual is to provide a clear and easy-to-use guide for the operation and maintenance of the GAC water filter system at the Site. This O&M Manual will be used by personnel performing the O&M activities in the field and provides the information needed to operate and maintain the system. The O&M Manual will be updated as needed to incorporate any changes to the system O&M procedures.

2 GAC WATER TREATMENT SYSTEM OPERATIONS

2.1 System Objective

The objectives of the GAC water treatment system is to remove TCE from cave stream water before it is used for washing the cave walkways, filling the theater room stage curtain basin, or any other uses activities within the cavern.

2.2 System Components

2.2.1 Bag Filter

A bag filter with a 20-micron mesh bag was installed prior to the GAC units to capture sediment from the cave stream. For operation and maintenance information, see the manual in Attachment 3. Procedures for changing the bag filter are outlined in Attachment 4.

2.2.2 GAC Units

The two GAC units are FRP-18x65 fiberglass high pressure tanks filled with granular activated carbon. Each unit is 18" in diameter with a height of 67" and holds 175 lbs of carbon with a total volume of 62.4 gallons. At the top of the water filters, 1" inlets and outlets connect to hoses with camlocks. The 1-inch inner diameter hoses connecting the GAC units are rated 200 PSI with EPDM inner tube and black EPDM cover, two 10 feet long and two 5 feet long. Each hose ends with a 1" plated steel king nipple and steel crimp sleeve and aluminium female coupler x female NPT connection.

2.2.3 Pressure Gauges

Quarter-inch NTP threaded pressure gauges are present upstream and downstream of the bag filter as well as the GAC units.

2.2.4 Hoses and Connections

The complete treatment system described above was connected to the existing cave stream water distribution system with a 1.5-inch diameter HDPE PE3408 hose rated for 200 PSI. Fittings used include the following:

1. 1½-inch brass 90 degree elbows
2. Stiffeners were inserted into the hose at each connection with brass fittings.
3. 1½ inch CTS x MIP brass connectors to connect the hose to the brass fittings
4. 1½ inch quarter bend CTS connections

2.2.5 Operational Procedures and Troubleshooting

For troubleshooting or replacing individual system components, refer to the equipment operation manuals provided in Attachment 3.

Refer to Attachment 3 for Operating and Maintenance Manuals and Attachment 4 for bag filter change out instructions. Attachment 5 includes the System Maintenance and Inspection Form.

3 ROUTINE MAINTENANCE ACTIVITIES AND PROCEDURES

This section provides the maintenance and inspection procedures for the System. Procedures are presented for the following inspection events:

- Monthly (every 800 hours),
- Semi-annually (every 4,000 hours),
- Annually (every 8,000 hours), and
- As needed.

The procedures include general system maintenance and specific inspection and maintenance procedures for each of the major system components. All system inspections must be properly documented in a field notebook or on the System Maintenance and Inspection Form included in Attachment 5.

3.1 Monthly O&M Activities

The general system O&M activities that should be performed monthly include:

- Check for leaks.
- Check and record pressures.

3.2 Semi-annual O&M Activities

The following O&M activities should be completed semi-annually:

- Pressure Gauges – Check the accuracy of the gauges using a separate pressure gauge threaded into the sampling port. Note any discrepancies in readings.
- Conveyance Piping – walk the conveyance piping route from the cave stream pump to the GAC water treatment system and visually check for signs of soil erosion or settling. Visually inspect all connections at the bag filter and carbon vessels.

3.3 Annual O&M Activities

The following O&M activities should be completed on a yearly basis:

- Backwash carbon in the GAC units annually to keep the carbon bed fluffed and functional following the procedures outlined in the Start-Up Instructions included in Attachment 3.

3.4 As-needed O&M Activities

The following O&M activities will be completed on an as-needed basis. System operation data will be collected to determine when these events are needed:

- Change bag filter when pressure drop across bag filter is observed.
- Backwash carbon beds in the GAC units when a pressure drop across the GAC units is observed.

ATTACHMENT 1

Treatment System PID

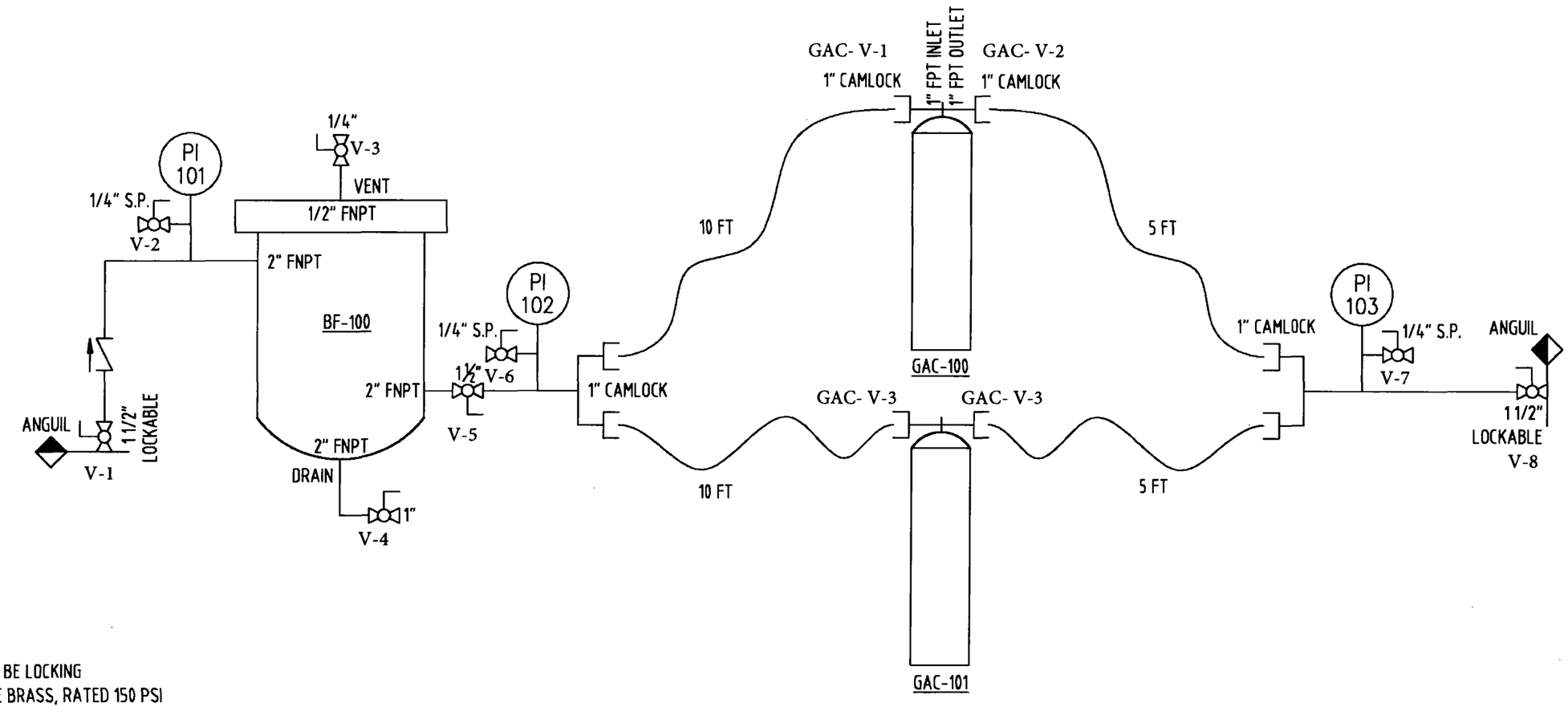

NOTES
1. ALL CAMLOCKS WILL BE LOCKING
2. BALL VALVES TO BE BRASS, RATED 150 PSI
3. METALLIC FITTINGS
4. ALL COMBINED FLOWS TO 1½" DIAMETER

BF-100
SINGLE BAG VESSEL, CARBON STEEL, RATED FOR 150 PSI, 2" NPT PROCESS CONNECTIONS, STYLE 6, VENT/DRAIN CONNECTIONS, BUNA GASKET, SUPPORT LEGS

GAC-100 / 101
FRP - 18X65 GAC VESSELS
OD = 18", OVERALL HEIGHT = 67"
WITH GRAVEL UNDERDRAIN AND 175 LBS REACTIVATED CARBON
1" FPT I/O CONNECTIONS

REV	BY	DATE	CHANGE
B	TMJ	15-AUG-2016	Combined flows to 1 1/2" dia, discharge hose reduced to 5'
A	TMJ	12-Aug-2016	Added sample ports, pressure gauges, customer requested changes

ANGUIL AQUA SYSTEMS, LLC

INFORMATION CONTAINED HEREIN IS THE PROPERTY OF ANGUIL AQUA SYSTEMS, LLC AND IS LOANED FOR REPRODUCTION ONLY. DRAWINGS OR PARTS OF DRAWINGS MAY NOT BE REPRODUCED WITHOUT THE EXPRESSED WRITTEN CONSENT OF ANGUIL AQUA SYSTEMS, LLC, MILWAUKEE, WI.

TITLE: OZARK MOUNTAIN TCE RETROFIT SYSTEM
PROCESS AND PIPING DIAGRAM

DRAWING NO. 19874-PID
SCALE NTS
DRAWN TMJ DATE 11-AUG-2016
CHECKED DATE
CHECKED DATE
APPROVED DATE
CUSTOMER ARCADIS
REV. B
SOURCE
PAGE 1 OF 1
AUTOCAD PATH

ATTACHMENT 2

Equipment Specification Sheets
(on CD)

THIS SLIPSHEET IS FOR SEMS PURPOSES ONLY

This Document is NOT in PDF Format.

This Document CAN NOT be uploaded into SEMS because it is a:

___ Compact Disk (CD)

___ Floppy Disk

___ VHS

___ DVD

___ Database

___ Oversized

x___ Other PORTION OF CD CONTAINES LOCKED FILES

The Records Center does not have the hardware and/or software to read, process, or upload this information.

If you need to view this document, it is available in the Records Center.

GENERAL CARBON CORP.

SAFETY DATA SHEET

Section 1 - Identity

Identity (As Used on Label and List): GC Activated Carbon (Including, but not limited to GC C-40, GC 4 x 8B, GC 4 x 8S, GC 6 x 12, GC 6 x 12S, GC 8 x 30, GC 8 x 30AW, GC 8 x 30S, GC 8 x 30SAW, GC 12 x 40, GC 12 x 40AW, GC 12x40SAW, GC 20 x 50, GC 20 x 50S, GC Powdered, GC WDC activated carbons)

Manufacturers Name: General Carbon Corporation
33 Paterson Street
Paterson, NJ 07501
Tel: (973)523-2223
www.generalcarbon.com
Date Prepared: May 19, 2016

Section 2 - Hazardous Identification

2.1 GHS-US Classification

Eye Irritation	2B H320
STOT	SE 3 H335

2.2 Label Elements

Hazard Pictograms

Signal word (GHS-US) : Warning
Hazard Statements : H320- Causes eye irritation
: H335- May cause respiratory irritation
Precautionary statements (GHS-US) : P261- Avoid breathing dust
: P264- Wash thoroughly after handling
: P271- Use in well-ventilated area
: P280- Wear protective gloves/clothing/eye & face protect
: P304&340: IF INHALED: Remove person to fresh air
: P305&351&P338: If in eyes, Rinse cautiously with water for several minutes. Remove contact lenses if present and easy to do so. Continue rinsing.
: P312- Call Poison Control Center/Doctor if you feel sick
: P403& P233- Store in well-ventilated place. Keep container tightly closed
: P405- Store locked up
: P501- Dispose of container to appropriate receptacle

2.3 Other Hazards
No additional information available
2.4 Unknown acute toxicity (GHS-US)
No data available

Section 3: Composition/information on ingredients

3.1 Substances
Not applicable
3.2 Mixture

Name	CAS #	%	GHS_US classification
Carbon	7440-44-0	100	Not classified

Section 4 – First Aid Measures

4.1 Description of first aid measures

First aid after inhalation	Remove person to fresh air. If not breathing, administer CPR or artificial respiration. Get immediate medical attention.
First aid after skin contact	If skin reddening or irritation develops, seek medical attention
First aid after eye contact	Immediately flush eyes with plenty of water for at least 15 minutes. If irritation persists, get medical attention.
First aid after ingestion	If the material is swallowed, get immediate medical attention or advice. DO NOT induce vomiting unless directed to do so by medical personnel.

4.2 Most important symptoms and effects, both acute and delayed

Symptoms/injuries after inhalation	May cause respiratory irritation
Symptoms/injuries after skin contact	May cause skin irritation
Symptoms/injuries after eye contact	Causes serious eye damage
Symptoms/injuries after ingestion	May be harmful is swallowed

4.3 Indication of any immediate medical attention and special treatment needed
No additional information available.

Section 5: Firefighting measures

5.1 Extinguishing media

Suitable extinguishing media	If involved with fire, flood with plenty of water
Unsuitable extinguishing media	None

5.2 Special hazards arising from substance or mixture

Fire hazard	None known
Explosion hazard	None known
Reactivity	Contact with strong oxidizers such as ozone, liquid oxygen, chlorine, etc. may result in fire.

5.3 Advice for firefighters

Protection during firefighting	Firefighters should wear full protective gear

Section 6: Accidental release measures

6.1 Personal precautions, protective equipment and emergency procedures

General measures	Avoid contact with the skin and eyes

6.1.1 For non-emergency personnel

No additional information available

6.1.2 For emergency responders

No additional information available

6.2 Environmental precautions

None

6.3 Methods and material for containment and cleaning up

For containment	If possible, stop flow of product
Methods for cleaning up	Shovel or sweep up and put in closed container for disposal

6.4 Reference to other sections

No additional information available

Section 7: Handling and storage

7.1 Precautions for safe handling

Precautions for safe handling	Avoid contact with eyes. Wet activated carbon removes oxygen from air causing severe hazard to workers inside carbon vessels or confined spaces

7.2 Conditions for safe storage, including any incompatibilities

Storage conditions	Protect containers from physical damage. Store in dry, cool, well-ventilated area.

7.3 Specific end use(s)

No additional information available

Section 8: Exposure controls/ personal protection

8.1 Control parameters

No additional information available

8.2 Exposure controls

Appropriate engineering controls	: Local exhaust and general ventilation must be adequate to meet exposure standards
Hand Protection	: None required under normal product handling conditions
Eye Protection	: safety glasses
Skin and body protection	: Wear suitable working clothes
Respiratory protection	: If airborne concentrations are above the applicable exposure limits, use NIOSH approved respiratory protection

Section 9: Physical and chemical properties

9.1 Information on basic physical and chemical properties

Physical state	: Solid
Appearance	: Particulate
Color	: Black
Odor	: No data available
Odor threshold	: No data available
Ph	: No data available
Relative evaporation rate	: No data available
Melting point	: No data available
Freezing point	: No data available
Boiling point	: No data available
Flash point	: No data available
Self ignition temperature	: No data available
Decomposition temperature	: No data available
Flammability (solid, gas)	: No data available
Vapor Pressure	: No data available
Relative Vapor density @ 20 deg C	: No data available
Relative Density	: 28-33 lb/ cubic foot
Solubility	: No data available
Log Pow	: No data available
Log Kow	: No data available
Viscosity, kinematic	: No data available
Viscosity, dynamic	: No data available
Explosive properties	: No data available
Oxidizing properties	: No data available
Explosive limits	: No data available

9.2 Other information

No additional information available

Section 10: Stability and reactivity

10.1 Reactivity

Contact with strong oxidizers such as ozone, liquid oxygen, chlorine, etc. may result in fire

10.2 Chemical stability

Stable under normal conditions

10.3 Possibility of hazardous reactions

Will not occur

10.4 Conditions to avoid

None

10.5 Incompatible materials

Strong oxidizing and reducing agents such as ozone, liquid oxygen or chlorine.

10.6 Hazardous decomposition products

Carbon monoxide may be generated in the event of a fire.

Section 11: Toxicological information

11.1 Information on toxicological effects

Acute toxicity : Not classified

Carbon (7440-44-0)

LD50 oral rat	: >10000 mg/kg
Skin corrosion/irritation	: Not classified
Serious eye damage/irritation	: Causes eye irritation
Respiratory or skin sensitization	: Not classified
Germ cell mutagenicity	: Not classified
Carcinogenicity	: Not classified
Reproductive toxicity	: Not classified
Specific target organ toxicity	: May cause respiratory irritation (single exposure)
Specific target organ toxicity	: Not classified (repeated exposure)
Aspiration hazard	: Not classified

Section 12: Ecological Information

12.1 Toxicity

No additional information available

12.2 Persistence and degradability

No additional information available

12.3 Bioaccumulative potential

No additional information available

12.4 Mobility in soil

No additional information available

12.5 Other adverse effects

No additional information available

Section 13: Disposal concerns

13.1 Waste treatment methods

Waste Disposal recommendations : Dispose of contents/container in accordance with local/ regional/ international regulations

Section 14: Transportation information

In accordance with DOT/ADR/RID/ADNR/IMDG/ICAO/IATA

14.1 UN Number

Not applicable. See Note 1 below.

14.2 UN proper shipping name

Not applicable

Note 1: Under the UN classification for activated carbon, all activated carbons have been identified as a class 4.2 product. However, This product has been tested according to the United Nations Transport of Dangerous Goods test protocol for a "self-heating substance" (United Nations Transportation of Dangerous Goods, Manual of Tests and Criteria, Part III, Section 33.3.1.6 - Test N.4 - Test Method for Self Heating Substances) and it has been specifically determined that this product does not meet the definition of a self heating substance (class 4.2)

or any other hazard class, and therefore should not be listed as a hazardous material. This information is applicable only for the Activated Carbon Product identified in this document.

Section 15: Regulatory information

15.1 US Federal regulations

Carbon (7440-44-0)
Listed on the United States TSCA inventory

15.3 US State regulations
No additional information available

Section 16: Other information

Full text of H-phrases:

Eye Irrit. 2B	Serious eye damage/eye irritation Category 2B
STOT SE 3	Specific target organ toxicity (single exposure) Category 3
H335	May cause respiratory irritation

NFPA®

NFPA health hazard	: 1-Exposure could cause irritation but only minor residual injury even if no treatment is given
NFPA fire hazard	: 1- Materials that require considerable preheating, under all ambient temperature conditions, before ignition and combustion can occur (e.g. mineral oil). Includes some finely divided suspended solids that do not require heating before ignition can occur. Flash point at or above 93.3 °C (200 °F)
NFPA reactivity	: 0- Normally stable, even under fire exposure conditions, and are not reactive with water

The information contained herein is accurate to the best of our knowledge. General Carbon Corporation makes no warranty with respect hereto said information and disclaims all liability from reliance there in.

FRP – SERIES

fiberglass pressure adsorber

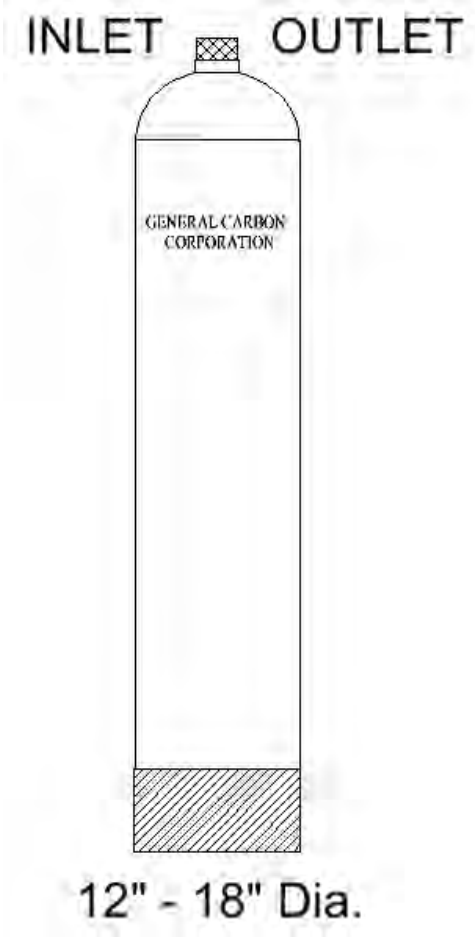

Resistant to many chemicals, GENERAL CARBON **FRP – SERIES** LIQUID PHASE ADSORBERS are ideal where corrosion is a primary concern. Rated for 150 PSI these units can be used effectively in high-pressure applications. FRP vessels always have to be protected from vacuum conditions by use of a vacuum breaker in the line. The FRP-SERIES tanks come in many sizes to handle a full range of liquid flows. Made with an internal bladder wrapped in fiberglass, these filament wound vessels are ideal for filtration using activated carbon, resins or other filter media. Food grade internals are standard along with a wide selection of inlet/outlet sizes. Automatic valves are available for unattended or automatic backwash operation.

Standard Features

- 150-PSI High Pressure Tank Design
- Corrosion Resistant FRP Construction
- ANSI/NSF Certifications
- Food Grade Rating for Tank & Internals

Model	Flow1 GPM	Carbon lbs2	Tot. Vol. Gallons	Inlet/Outlet Location	FPT	Diameter	OAH
FRP-12x48	4	55	23.4	Top	1"	12"	48"
FRP-13x54	5	75	27.6	Top	1"	13"	55"
FRP-16x65	10	135	48.3	Top	1"	16"	66"
FRP-18x65	12	175	62.4	Top	1"	18"	67"
FRP-24x72	15	330	119	T/B	1"	24"	76"
FRP-30x72	25	525	187	T/B	3"	30"	81"
FRP-36x72	35	740	264	T/B	3"	36"	82"
FRP-42x72	48	970	345	T/B	3"	42"	86"
FRP-48x72	62	1300	463	T/B	3"	48"	86"

1 Flow Rate at Maximum Recommended Loading of 5-gpm/sq. ft. Bed Cross-Section Area.
2 Pounds of Carbon is for Density of 28#/cu. ft. and allowing 25% Bed Expansion for Backwash.

INSTALLATION & START UP

FRP-series adsorbers are shipped empty along with the required carbon. The adsorber should be connected and all fittings pressure tested for leaks before the carbon is installed through the top access hole. A vacuum relief device is advised to prevent tank damage. After the carbon has been loaded, the unit should be filled with clean water through the bottom collector, and allowed to degas for 8-12 hours if possible. Backwashing the carbon is recommended to remove carbon fines that can cause excessive pressure drop through the unit.

MAINTENANCE

All liquid phase adsorbers work better if they are backwashed periodically. This "fluffs" up the bed removing fines and channeling flows. Additional maintenance that FRP–Series adsorbers require is the testing of effluent quality, and the checking of the operating pressure of the system. Monitoring the contaminant level into the last unit in a series arrangement is the recommended safeguard against having breakthrough in the final outflow.

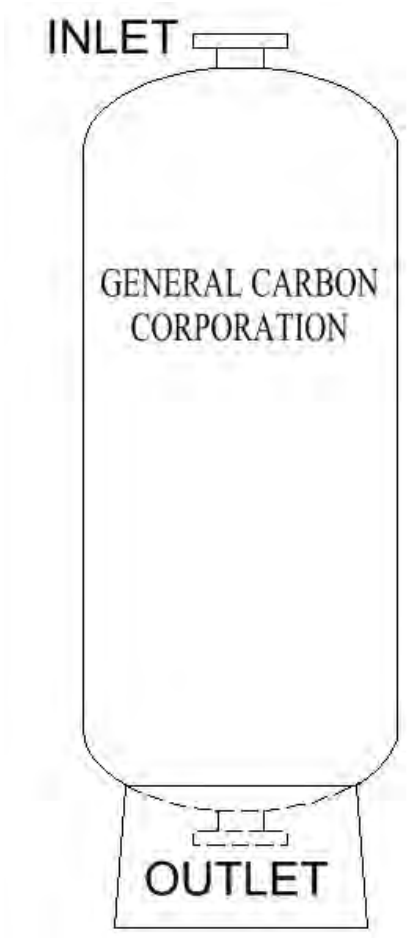

24" Through 48" Diameter

SERVICING THE FRP TANKS

Once an adsorber's carbon is saturated by contaminants, the unit should be taken off line and fresh carbon installed. To purchase replacement carbon or to arrange for a carbon change-out, please contact our office. When preparing the unit for service, you need to drain as much water as possible from the vessel.

Caution!

Wet activated carbon removes oxygen from air causing a severe hazard to workers inside carbon vessels. Confined space/low oxygen procedures should be put in place before any entry is made. Such procedures should comply with all applicable Local, State and Federal guidelines.

33 Paterson Street, Paterson, New Jersey 07501 Tel: 973 523 2223 Fax: 973 523 1494
www.generalcarbon.com sales@generalcarbon.com

ATTACHMENT 3

Equipment Operating and Maintenance Manuals
(on CD)

INSTALLATION, OPERATION AND MAINTENANCE MANUAL

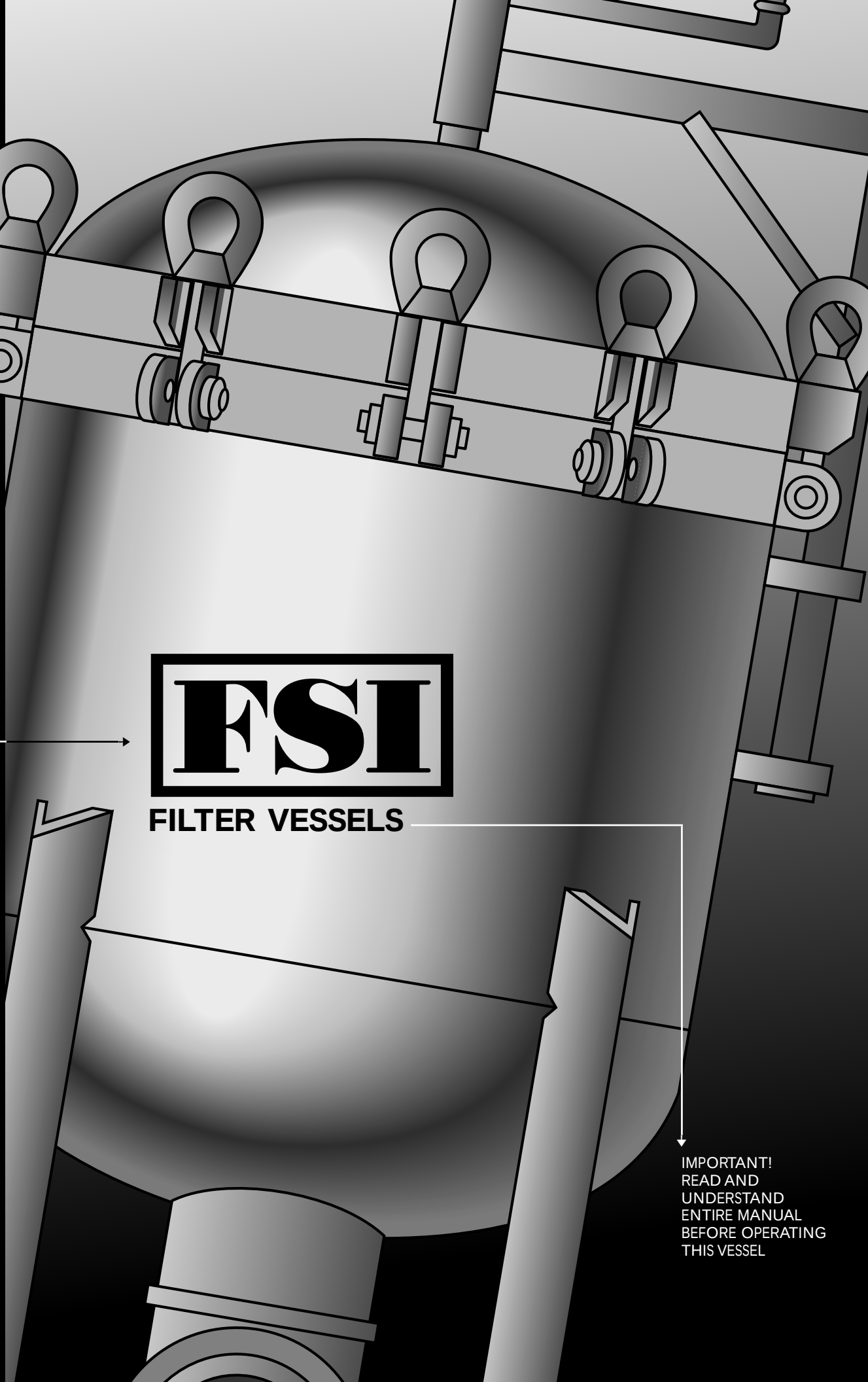

FSI

FILTER VESSELS

IMPORTANT! READ AND UNDERSTAND ENTIRE MANUAL BEFORE OPERATING THIS VESSEL

This manual contains important revised information and supersedes all prior publications.

This manual has been prepared for the safe installation, operation, and maintenance of FSI pressure vessels. Warning labels have been reprinted in this manual. The application of warning labels to vessels is based upon vessel type and adequate space to affix labels. **Warning labels are not a substitute for reading and understanding this manual.**

LABEL FORMAT

A. Hazard Alert Word
B. Hazard and Consequence Statement
C. Instruction Statement

A.➜ ⚠ WARNING!

B.➜ Improper use of this vessel can cause serious injury, blindness or death.

C.➜ Read the vessel ASME code plate, warning labels and this instruction manual for the installation, operation and maintenance of filter vessels before installation and operation.

All labels must be replaced when legibility is lost or visibility is blocked. Labels have a part number in the lower right hand corner for reordering.

PROTECTIVE CLOTHING

Before operating this vessel, operator should wear protective clothing including protective gloves and face shield. If handling hot liquids, operator should wear heat-resistant clothing such as Nomex garments to prevent possible burning or scalding. Refer to Material Safety Data Sheet (MSDS) for specific instructions for handling the liquid as supplied by the manufacturer of the material.

INSTALLATION

MOVING VESSEL

A. Mount vessel securely to a skid and move skid with fork lift.
B. Vessel can be lifted by means of a multi-legged sling chain with a safety hook attached to the end of each leg. Attach the hook of each leg to an eyenut and space legs around vessel equally. (See Figure 1)

PLACEMENT OF MANUAL FOR THE INSTALLATION, OPERATION AND MAINTENANCE OF FILTER VESSELS

The end user is to locate one manual for the installation, operation, and maintenance of filter vessels on each vessel at final installation so it is visible and accessible to an operator.

MOUNTING

All vessels must be properly bolted to the floor before moving the lid. This will assure vessel stability and prevent tipping.

NEW FLOOR CONSTRUCTION

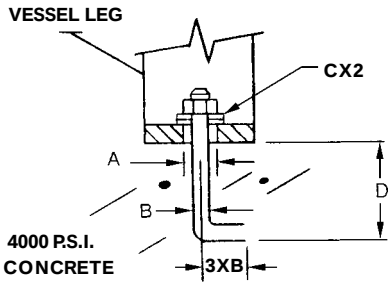

EXISTING CONCRETE FLOOR

For vessels placed on existing floors, use the following or an equivalent:
Red 1 – Chem-threaded anchor rod
Red 1 – Chem capsules

Refer to manufacturer's literature for part number and installation instructions.
ITW Ramset/Red Head
U.S. 12 & Liberty Trail
Michigan City, IN 46360
Phone Number: (219) 874-4217
Fax Number: (219) 874-7035

For vessel weight, check the bill of lading.

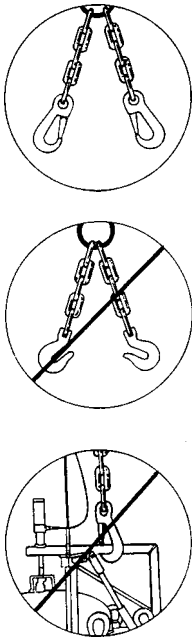

WARNINGS

Never use the lid support arm to lift vessel.

Damage to lift assembly will result.

Vessel may drop.

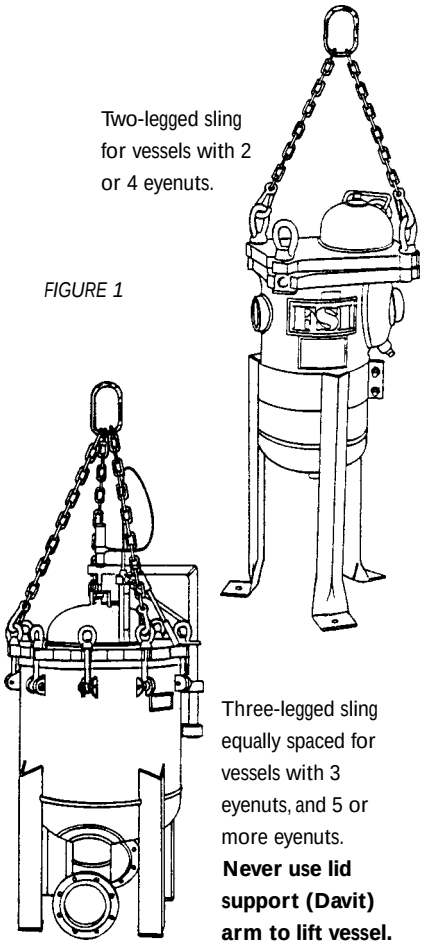

Two-legged sling for vessels with 2 or 4 eyenuts.

FIGURE 1

Three-legged sling equally spaced for vessels with 3 eyenuts, and 5 or more eyenuts.
Never use lid support (Davit) arm to lift vessel.

A	B	C			D	
Mounting Plt. Hole Diameter	Anchor Thread Diameter	American Standard Plane Washer			Embed-ment	Minimum Pullout
		ID	OD	THK		
17/32 in 13.4 mm	3/8 9.5	7/16 11	1 25.4	.10 2.5	3 76	4000 lb 1814 kg
1 in 25.4 mm	1/2 12.7	9/16 14.3	1-3/8 34.9	.13 3.3	4 101	7500 lb 3402 kg

INSTALLATION

PIPING

The piping material used should be the same as the base material of the vessel. It should have a rating equal to or greater than the pressure and temperature rating of the vessel.

RELIEF VALVE

It is the responsibility of the end user to protect system components, such as the FSI Filter, from being over pressurized. This can be achieved by installing a system relief valve.

PRESSURE GAUGE, TEMPERATURE GAUGE, AND VENT VALVE

FSI does not supply the vessel pressure gauge, temperature gauge, or the vent valve. It is the responsibility of the end user to obtain, install and maintain the proper gauge, indicating vessel temperature and internal vessel pressure. (Refer to Figure 2, Page 5)

GASKET

Note: The operating temperature of a gasket material changes with respect to the fluid temperature and chemical concentration.

Each FSI gasket is labeled to show the vessel type it will fit and the gasket material.

LABEL FORMAT

EXAMPLE:

VESSEL TYPE ➜	FS 3500, 3000, 2500, 30021 FSP 4000
GASKET MATERIAL ➜	Viton®

SPECIAL INSTRUCTION LABELS

Gasket installed with lips toward center of vessel.

Use only FSI approved gaskets.

SYSTEM CHECK

It is advisable to hydro-statically test this vessel with water to determine if there are any leaks in the system.

Should there be any questions or if assistance is needed in the installation, operation or maintenance of this vessel, please contact the Engineering Department, Filter Specialists, Inc., P.O. Box 735, Michigan City, IN 46360.
Phone: 800-348-3205
Fax: (219) 877-0639

⚠ WARNINGS

Gaskets can fail, causing serious injury and/or blindness.

Gasket material must be chemically and temperature compatible with fluid being filtered.

Viton® is a registered trademark of Dupont Dow Elastomers.

MANUAL LIFTING DEVICE:
Refer to Figure 2

This device consists of a threaded stud (Item 16) welded to the lid and an internally threaded crank handle (Item 15).

A. Keep threads clean and well lubricated with a lubricant acceptable for the customer's application.

B. Threads should be inspected periodically for wear and tear. Should the wear become excessive, parts should be replaced with authorized FSI parts.

CRANK HANDLE – P/N 26004
Specify carbon steel OR stainless steel vessel
*THREAD STUD – P/N 20521
Specify carbon steel OR stainless steel vessel

C. Lubricate the support and swivel blocks (Item 14) of the Davit Arm which supports the lid when opened.

HYDRAULIC LIFTING DEVICE:
Refer to Figure 2

FSI offers three basic lid lifting cylinder assemblies. See Table 1 for replacement parts.

A. Maintain the hydraulic reservoir in the dump (Item 12) with hydraulic fluid. Refer to the manufacturer's maintenance literature (See Pages 6-7). The pump relief valve is factory set to prevent excess pressure (1800 PSI).

B. Check the hydraulic hoses (Item 13) periodically for tears, abrasion and kinks. Replace if needed.

C. There are two (2) nuts attached to the end of the cylinder rod. The first is a jam nut (GR5) (Item 10) and the second is a lock nut with a nylon insert (Item 11). If item 11 is removed, it must be replaced with a new one to keep it from vibrating loose.

D. On the lift cylinder assemblies, the lid lowering rate can be set by adjusting the flow control valve mounted in the cylinder end cap. Adjust speed so that the lid comes down slowly. (Item 19, Figure 2)

*Threaded stud must be welded by an authorized ASME code weld facility. The vessel must be re-inspected after welding by an authorized inspector.

TABLE 1 **REPLACEMENT PART LIST FOR LID-LIFTING DEVICE**

General application for vessels rated at 150 PSI or less and **NO** corrosion allowance. Please have FSI verify the actual lift cylinder assembly by matching it with the vessel serial number for all other vessels.					Grade #5	
MODEL NO.	LIFT CYLINDER ASSEMBLY PART NO.	HYDRAULIC PUMP PART NO.	HYDRAULIC HOSE PART NO.	HYDRAULIC CYLINDER PART NO.	LOCK NUT	LOCK NUT WITH NYLON INSERT
252-3500	19982	26220	26222	3/4 BORE X 3 STK # 26010	1/4-28 # 25115	1/4-28 # 25116
4000-5000	402184	26221	26222	1-1/8 BORE X 3 STK # 26218	3/8-24 # 25117	3/8-24 # 25118
5500 and up	404342	26221	26222	1-3/8 BORE X 3 STK # 26209	# 25117	# 25118

FIGURE 2

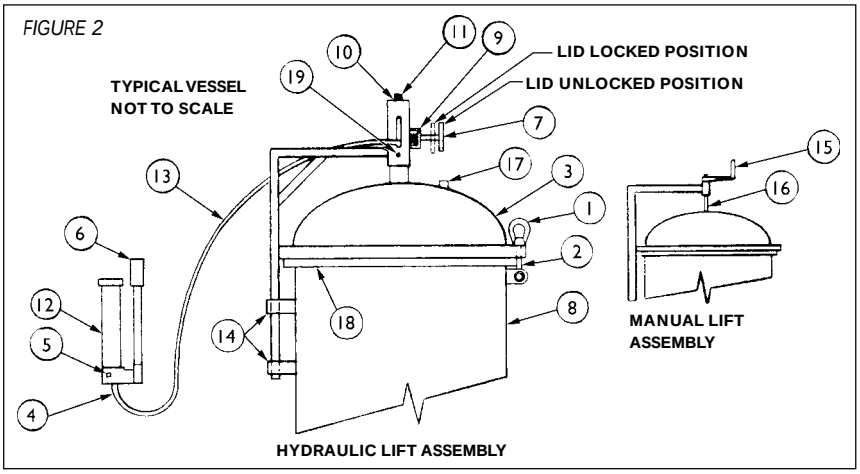

ITEM	DESCRIPTION	ITEM	DESCRIPTION
1	Eye Nut	11	Lock Nut
2	Lid Restraining Bolts	12	Hand Pump
3	Lid	13	Hose
4	Pump Hose End	14	Support Blocks Davit Arm
5	Pump Release Valve	15	Handle
6	Pump Handle	16	Stud
7	Safety Pin	17	Vent
8	Vessel Body	18	Collar Plate
9	Spring	19	Flow Control Valve in Cylinder End Cap
10	Jam Nut		

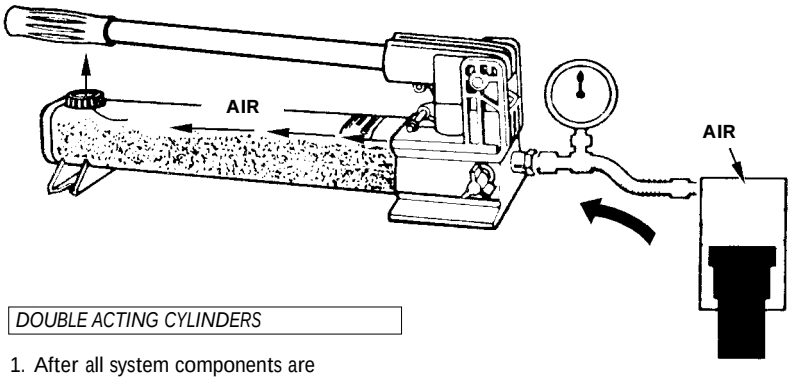

REMOVAL OF AIR

When hoses, cylinders and other components are connected to build a system, air will be trapped in the system. To function properly, the air in the system must be removed. However, the hand pump does require air in the reservoir to prevent a vacuum. If the pump reservoir is totally filled and the vent cap is closed tight, the vacuum created will prevent oil flow out of the pump. Fill reservoirs only to level indicated on the pump end cap.

SINGLE ACTING CYLINDER SYSTEMS

1. After all system components are connected to the hand pump, check reservoir oil level. Fill to indicator mark on the end cap. Replace the fill cap and be sure it is closed (not in vent position).
2. Turn pump release valve to closed position. Operate hand pump until cylinder plunger is completely extended.
3. Invert cylinder (plunger end down). Open the pump release valve; as the plunger retracts, the air in the system will be forced into the pump reservoir and replaced by oil. Close the release valve.
4. Turn the cylinder upright. Operate the pump to cycle the cylinder plunger. If air is out of the system, the plunger will advance and retract smoothly. If the plunger is erratic, repeat steps 1 through 4.
5. Open the pump fill cap and check the oil level. Fill to the indicator mark on the end cap.

DOUBLE ACTING CYLINDERS

1. After all system components are connected to the hand pump, check pump reservoir oil level. Fill to the indicator mark on the pump end cap. Replace end cap and tighten (not in vent position).
2. Place hand pump in a place where it will be higher than the hydraulic cylinder. Lay the hydraulic cylinder on its side with the couplers facing up.
3. Close the pump release valve (finger tight). Operate the pump to advance and retract the cylinder plunger three or four times.
4. Open pump release valve to retract the cylinder plunger. Check pump oil level. Add oil as necessary to restore correct level in the reservoir.

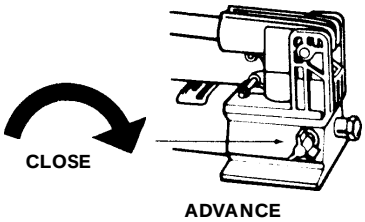

1. **To advance cylinder plunger, turn pump release valve clockwise as illustrated and close fingertight.** CAUTION: To avoid release valve damage, do not use tools to tighten valve.
2. Operate pump handle.

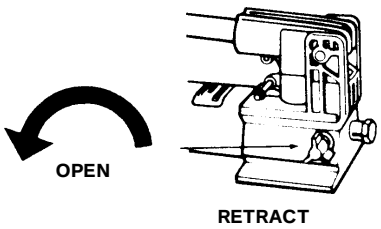

3. To retract cylinder plunger, turn release valve counterclockwise as illustrated.
4. Pump can be operated from horizontal or vertical (as long as hose end is down).

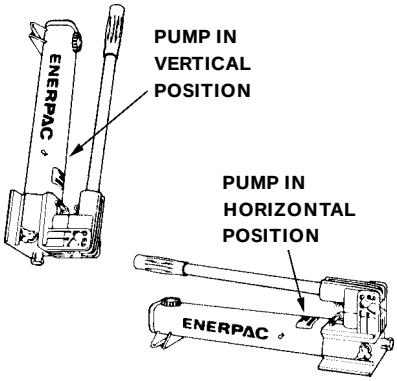

MAINTENANCE

To check oil level in pump, open pump release valve to allow cylinder (if connected) to return to pump. Remove fill cap. Add ENERPAC hydraulic oil until level with mark on rear cap. **DO NOT** overfill. To function properly, all hand pumps require air in the reservoir. If oil level is too high, the pump will not operate. If hydraulic system is used under extremely dirty conditions, frequently drain pump completely. Refill with clean ENERPAC hydraulic oil. Install fill cap and close it.

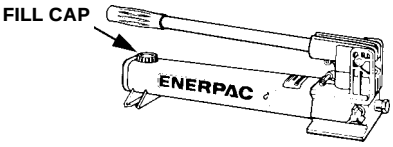

FIGURE 3

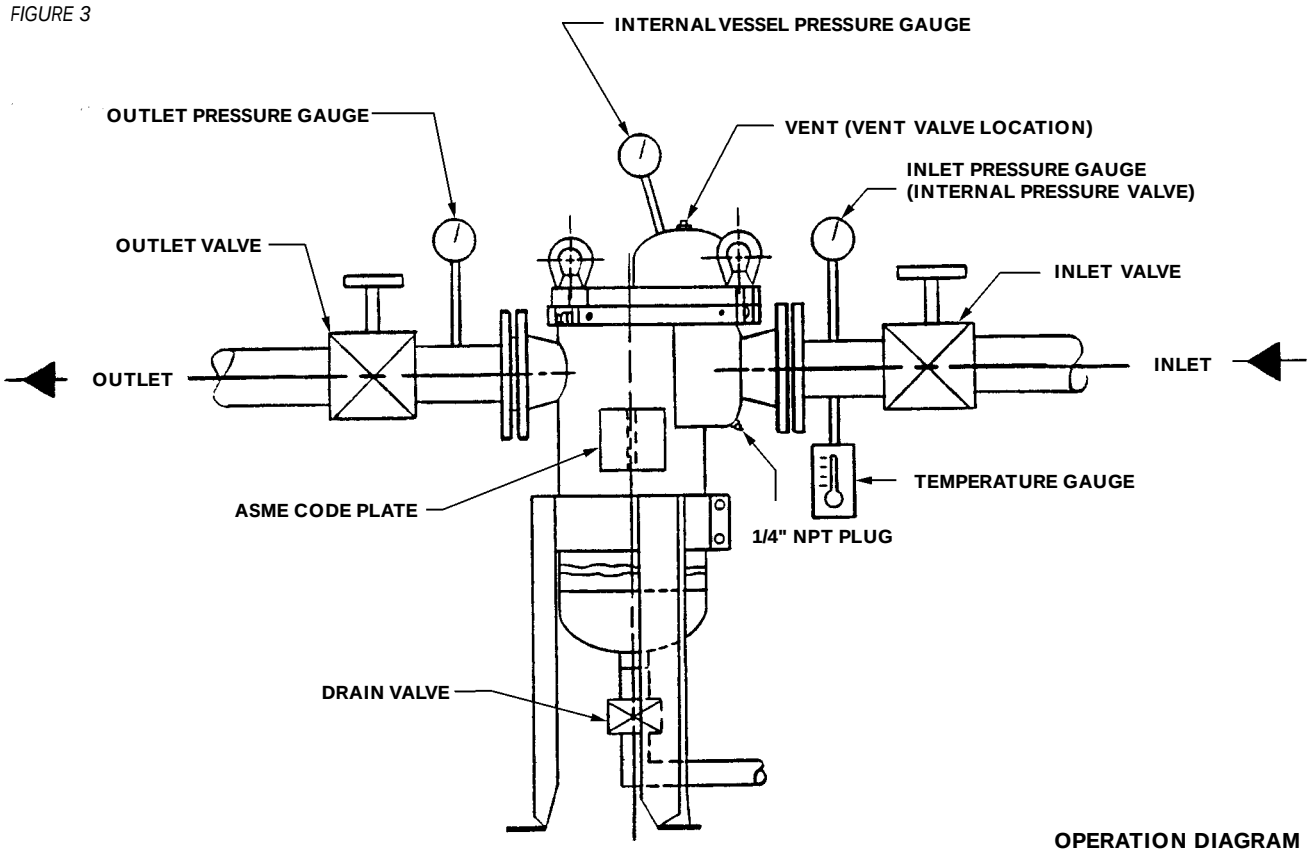

OPERATION DIAGRAM

REPLACING COUPLER

ASSEMBLING TO HOSE

Clamp the hexagon nut of the hose fitting in a vise as illustrated. Remove the old coupler or rigid adaptor. Install new coupler clockwise on to hose fitting to a firm fit. Use high quality thread sealer on threads (one wrap only). A kit has been prepared for the purpose of replacing a worn out seal and may be obtained at your nearest authorized technical service center.

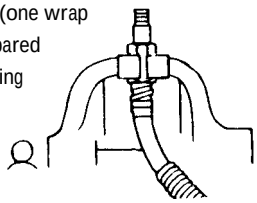

ASSEMBLING SPEED-D-COUPLERS TO CYLINDER

Use wrench to unscrew old coupler half from cylinder. Thread new coupler to cylinder and tighten firmly. Use a high quality thread sealant on coupler thread (one wrap only).

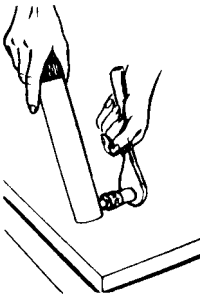

LIDS WITH NO LIFT MECHANISM — lid nuts should be unscrewed far enough to allow the lid to rest on the gasket freely and parallel to the vessel collar plate.

FIGURE 4

NOTE: POSITION OF EYE NUTS PRIOR TO TIGHTENING

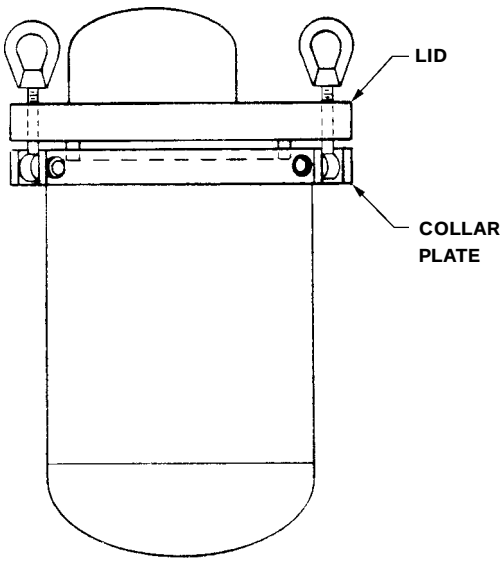

WARNING

Hot and/or chemically active liquids can cause serious injury and blindness.

Before operating this vessel, operator should wear protective clothing, including protective gloves and face shield. If handling hot liquids, operators should wear heat resistant clothing such as Nomex garments, to prevent possible burns.

WARNINGS

Do not exceed the operating limits of this vessel and gasket.

Serious injury or death can result if limits are exceeded.

Refer to the Material Safety Data Sheet (MSDS) for specific information on material. The MSDS is supplied by the manufacturer of the material.

For maximum pressure, check ASME code plate of vessel.

For maximum temperature of vessel, check ASME code plate.

For maximum operating temperature of gasket, call FSI, (219) 879-3307. The maximum gasket operating temperature can change with changes in fluid, chemical composition, temperature and pressure.

Note: Do not exceed the lesser of the two maximum temperatures.

I. INITIAL CLOSING OF THE VESSEL

Vessel must be isolated from system – pump turned off and locked out; inlet and outlet valves closed. Refer to Figure 3, Page 7.

A. Insert basket into seat. The basket rim flange must cover entire opening. If not, the basket may cock and be forced through the opening under pressure. Refer to Figure 5, Page 9.

B. Insert new filter elements, making sure that all bags or cartridges are properly seated. Snap ring bags must have the selvage on the inside of the bag to prevent bypass. Refer to Figure 5, Page 9.

C. Inspect gasket groove and gasket. Refer to Figure 6, Page 10. If gasket is nicked or worn, replace only with FSI replacement parts. For ordering replacements, refer to vessel model number and serial number.

D. Insert gasket, making sure gasket is not twisted, and if a lip-type gasket is used, the lips must point inward as shown in Figure 6, Page 10. If gasket wants to roll out of groove, stretch gasket slightly by hand, inspect gasket seam, and refit into groove.

E. Position lid for closing.

1. Lids with no lift mechanism — lid nuts must be unscrewed far enough to allow the lid to rest on the gasket freely and parallel to the vessel collar plate. Refer to Figure 4, Page 7.
2. Lids with a crank—Refer to Figure 3, Page 7.
   a. Rotate lid over vessel so the eye nut and bolt bracket are in line.
   b. Turn crank to lower lid.
   c. Realign brackets, if necessary, before lid sets down on vessel body.
3. Lids with hydraulic lifts—Refer to Figure 2, Page 5.
   a. Refer to steps E2a, E2b, E2c.
   b. Hold hand pump in vertical position with hose end down and raise lid slightly.
   c. With one hand, pull safety pin out to disengage it. Hold in this position.
   d. With other hand, crack open the pump release valve.
   e. Lower lid until it almost touches gasket, release safety pin, align eyebolt and eyenut brackets, and continue to lower lid until it rests freely on the gasket.

WARNINGS

A falling lid can cause serious injury and loss of limb.

Never place hands, fingers, or limbs between lid and vessel.

F. Engage all bolts. Hand tighten nuts. Refer to Figure 7, Page 10.

G. Moderately torque nuts at 180° to each other, rotating around the vessel until tight. Refer to Figure 7, Page 10.

H. Close vent valve. Refer to Figure 3, Page 7.

I. Turn pump on.

J. Open inlet valve slowly and observe for leaks. Should any leaks appear, close valve immediately and continue with part II. Refer to Figure 2, Page 5.

K. If necessary, fill vessel with product by evacuating the air via the vent valve.

L. Open outlet valve. Refer to Figure 3, Page 7.

II. OPENING AND CLOSING OF THE VESSEL LID

Adhere to the following sequence. Refer to Figure 2, Page 5.

WARNING

Do not open a vessel under pressure.

Escaping fluid can cause serious injury and blindness.

A. Before opening vessel:

1. Turn off pump and lock it out.
2. Close inlet and outlet valve.

B. Open vent valve. Make sure that the valve outlet is so piped that escaping fluids are so directed to prevent personal injury of the operator and surrounding area.

C. Check pressure gauge to make sure that the isolated vessel's internal pressure is zero PSI gauge. Refer to Figure 3, Page 7.

D. Drain fluid from vessel by gravity flow through drain valve. Close drain valve. Evacuation can be assisted with pressurization. Refer to "Blow Down Procedure," Page 11.

E. Loosen lid nuts and swing nuts and bolts free of lid.

F. Lift lid.

Lids with hydraulic lifts:
Hold hand pump vertically with hose end down. Close pump release valve and pump until lid lifts high enough to engage spring loaded safety pin.

WARNING

Safety pin must be engaged when lid is open.

A falling lid can cause serious injury and loss of limb.

G. Rotate lid off of vessel.

H. Remove filter bag or cartridges with caution.

I. Inspect basket for roundness and flange condition.

J. Verify that basket and bag-bearing surfaces are clean and free of nicks.

K. Insert new filter elements, making sure that all bags or cartridges are properly seated. Snap ring bags must have selvage on inside of bag. Refer to Figure 5.

L. Remove gasket; clean gasket groove. If gasket is worn or nicked, replace only with FSI replacement parts. For correct replacements, refer to the vessel model number and serial number. Use only FSI authorized gaskets.

M. Rotate lid over vessel and align bolt and nut brackets.

N. Close lid. Same as E1, E2, and E3, Page 8.

O. Same as I.F.

P. Same as I.G.

Q. Same as I.H.

R. Same as I.L.

S. Same as I.J.

T. Same as I.K.

U. Same as I.L.

If a vessel still leaks, depressurize vessel and retorque bolts according to step I.G., Page 8. If vessel leakage continues, call FSI.

FIGURE 5

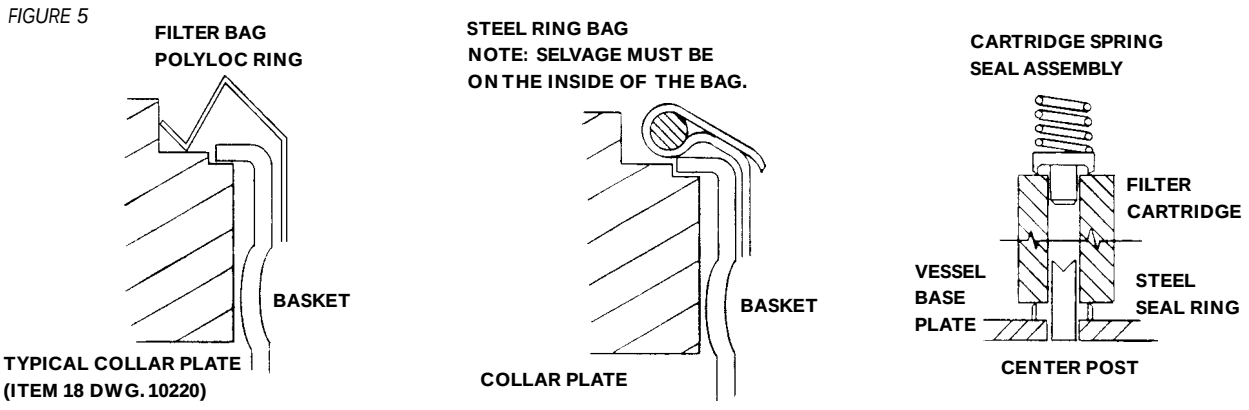

FIGURE 6

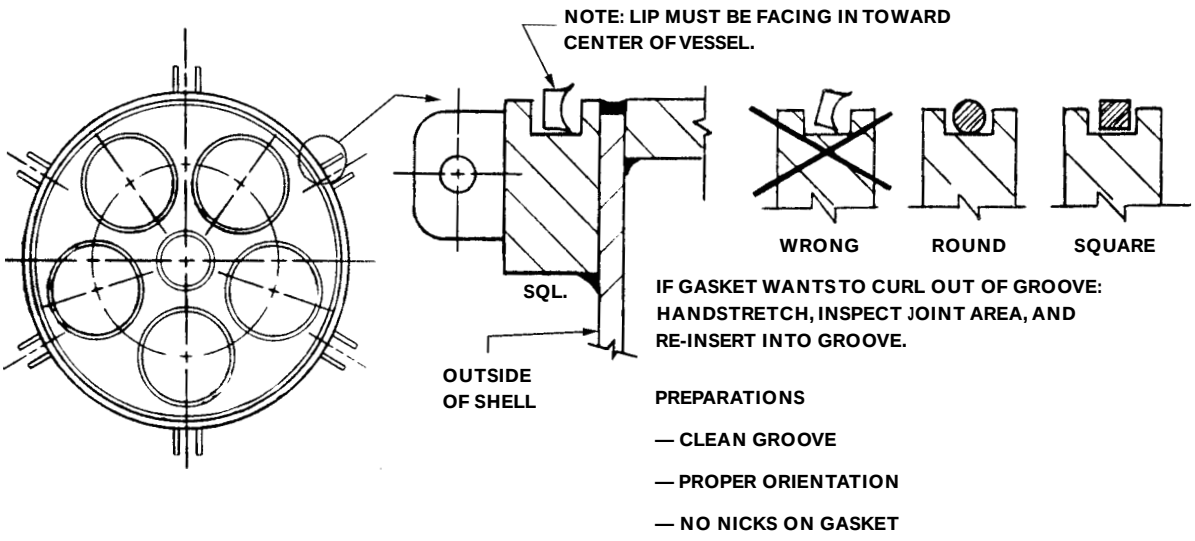

GASKET INSTALLATION

FIGURE 7

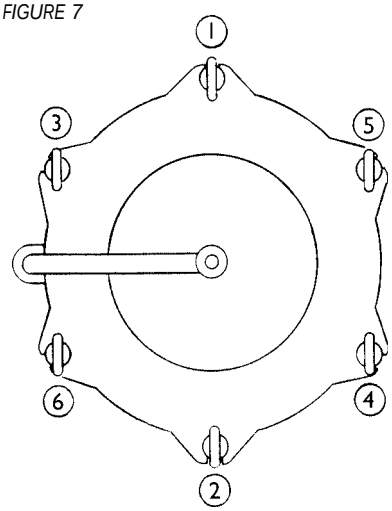

NOTE: EXCESSIVE TORQUE SHOULD NOT BE NECESSARY WHEN USING FSI SELF-ENERGIZING GASKETS.

BOLT TIGHTENING SEQUENCE

Standard FSI vessels are designed to use gaskets made of self-energizing material, such as BUNA, EPR, or Viton®. The torque requirements to seal a vessel with such gaskets is minimal. It is, therefore, not necessary to use extensions or cheater bars when torquing eyenuts. FSI does not recommend the use of gaskets made of non-energizing material or rope-type gaskets. They may require excessive tightening torque. Due to the many variables that influence torque, exact values are not given herein. For general torque values applicable to your particular vessel, call FSI at 1-800-348-3205.

BLOW DOWN PROCEDURE

To aid filter element changes, the liquid in the vessel can be evacuated prior to the change.

1. Close inlet valve. Refer to Figure 3, Page 7.
2. Close outlet valve.
3. Open vent valve.
4. Check gauge — internal pressure must be zero.
5. Open drain valve.
6. Close vent.
7. Connect gas to vessel via vent valve. Use only if gravity evacuation does not yield desired results.
8. Open vent valve slowly.
9. Close vent valve metering out fluid.
10. Disconnect gas.
11. Close drain valve.
12. Make sure internal pressure is zero and continue with opening instructions.

FILTER IN OPERATION

Once the filter is operational and in use, the differential pressure should be checked regularly. It is suggested that when the differential pressure across the filter elements reaches a predetermined amount, the elements be changed. If the differential pressure suddenly drops, stop filtration immediately and check bags for proper seal or rupture.

WARNINGS

The gas used for blow down must be stable in the environment of the fluid being evacuated.

WARNINGS

- **PRESSURE GAUGE AND VENT VALVE MUST BE INSTALLED IN ACCESS HOLE.**
- **FAILURE TO INSTALL PRESSURE GAUGE AND VENT CAN RESULT IN SERIOUS INJURY WHEN OPENING THE LID.**
- **DIRECT VENT VALVE EXHAUST TO A SAFE PLACE.**

1289 **PT. NO. 35001**

WARNINGS

- **VESSEL MAY TIP IF NOT PROPERLY BOLTED TO FLOOR.**
- **A TIPPING VESSEL CAN CAUSE SERIOUS INJURY.**
- **PROPERLY BOLT VESSEL TO FLOOR BEFORE ROTATING LID.**
- **REFER TO MANUAL FOR THE INSTALLATION, OPERATION, AND MAINTENANCE OF FILTER VESSELS.**

1289 **PT. NO. 35002**

WARNING!

- VESSEL AND/OR GASKET CAN FAIL IF OPERATING LIMITS ARE EXCEEDED.
- A FAILURE CAN CAUSE SERIOUS INJURY, BLINDNESS OR DEATH.
- DO NOT EXCEED MAXIMUM OPERATING PRESSURE PER VESSEL CODE PLATE.
- CHECK TEMPERATURE RANGE ON VESSEL CODE PLATE.
- CHECK TEMPERATURE RANGE OF GASKET MATERIAL WITH RESPECT TO FLUID BEING FILTERED.
- DO NOT EXCEED THE LESSER OF THE TWO OPERATING TEMPERATURES.
- SECURE LID BY TIGHTENING LID EYENUTS.
- READ THE MANUAL FOR THE INSTALLATION, OPERATION, AND MAINTENANCE OF FILTER VESSELS.

1289 PT. NO. 35000

WARNING!

- RAISED LID MAY FALL IN THE EVENT OF A HYDRAULIC OR MECHANICAL FAILURE.
- A FALLING LID CAN SERIOUSLY INJURE OR CAUSE LOSS OF LIMB.
- REFER TO FSI OPERATING AND MAINTENANCE INSTRUCTIONS.
- READ AND UNDERSTAND THE FOLLOWING INSTRUCTIONS:
  - — NO BODY PARTS UNDER THE LID AT ANY TIME.
  - — WEAR EYE PROTECTION IN CASE OF HYDRAULIC COMPONENT RUPTURE.
  - — ENGAGE LID SAFETY LATCH WHERE APPLICABLE.

1289 PT. NO. 35003

WARNING!

- IF IMPROPERLY USED, THIS VESSEL CAN CAUSE SERIOUS INJURY, BLINDNESS OR DEATH.
- READ ALL WARNING LABELS AND MANUAL FOR THE INSTALLATION, OPERATION, AND MAINTENANCE OF FILTER VESSELS BEFORE USE.
- FOR ADDITIONAL MANUALS, CALL FSI AT 1-800-348-3205.

PT. NO. 35005

WARNING!

- GASKET SEAL MAY LEAK OR SQUIRT FLUID UNDER PRESSURE IF THE LID OPENING AND CLOSING INSTRUCTIONS ARE NOT FOLLOWED.
- SQUIRTING FLUID CAN CAUSE SERIOUS INJURY OR BLINDNESS.
- READ THE MANUAL FOR INSTALLATION, OPERATION, AND MAINTENANCE OF FILTER VESSELS.
- WEAR PROTECTIVE CLOTHING.
- WEAR FACE SHIELD.
- BEFORE OPENING, TURN PUMP OFF AND LOCK IT OUT.
- CLOSE INLET AND OUTLET VALVE.
- OPEN VENT SLOWLY — DIRECT EXHAUST TO SAFE PLACE.
- INTERNAL PRESSURE SHOULD BE ZERO PSI GAUGE.
- DRAIN FLUID VIA DRAIN VALVE.
- CLOSE DRAIN VALVE.
- UNBOLT LID LUGS.
- LIFT LID.
- ENGAGE LID SAFETY PIN (IF APPLICABLE).
- ROTATE LID, UNCOVERING VESSEL.
- CHANGE FILTER ELEMENT.
- REMOVE GASKET, CLEAN GASKET GROOVE AND GASKET.
- INSPECT GASKET GROOVE AND LID SEALING AREA FOR DAMAGE.
- REPLACE DAMAGED PARTS WITH FSI REPLACEMENT PARTS ONLY.
- REPOSITION LID, DISENGAGE SAFETY PIN AND LOWER LID ONTO VESSEL SLOWLY.
- REPLACE WASHERS UNDER NUTS IF NECESSARY.
- ENGAGE ALL BOLTS, HAND TIGHTEN NUTS.
- NUT AND BOLT THREADS MUST BE FREE OF RUST AND FOREIGN MATTER.
- MODERATELY TORQUE NUTS AT 180° TO EACH OTHER, ROTATING AROUND VESSEL.
- CLOSE VENT VALVE.
- ACTIVATE PUMP.
- OPEN INLET VALVE SLOWLY. OBSERVE FOR LEAKS. IF LEAK APPEARS, CLOSE VALVE AND START OVER.
- IF THERE ARE NO LEAKS, OPEN OUTLET VALVES SLOWLY.

1289 PT. NO. 35004

TO LEARN MORE ABOUT FILTER SPECIALISTS, INC. PRODUCTS, CONTACT OUR OFFICE BELOW OR VISIT OUR WEB PAGE: http://www.fsifilters.com.

FSI ® 100 Anchor Road
P.O. Box 735
Michigan City, IN 46361
(219) 879-3307
(219) 877-0632 FAX

Filter Specialists, Inc. 800-348-3205

Viton® is a registered trademark of Dupont Dow Elastomers.

There are no expressed or implied warranties, including the implied warranty of merchantability and fitness for a particular purpose not specific herein respecting this agreement or the product being sold hereunder or the service provided herein.

MANUFACTURED IN THE USA

PRINTED IN USA

OPMAN-002-302
Part No. RMLOPMAN

GENERAL CARBON CORP.

FRP Adsorber Loading Directions

FRP adsorbers are shipped empty so that the media movement during shipping does NOT damage the internal plumbing of the vessels. These directions will tell you how to assemble the vessel and media correctly. You will need to have a funnel (can be made from cardboard) that fits inside the large opening in the top of the vessel in order to load the media easily.

FRP tanks have a screw in Inlet/Outlet head on the top of the tank. Unscrew this piece being careful not to lose the rubber "O"-ring that fits into a groove in the bottom of the head. Under the head is a dip tube that is sealed to the head by another "O"-ring inside the hole in the underside of the head. The dip tube goes from the head to a notch in the center of the bottom of the vessel. You should also have underdrain gravel that goes into the bottom of the vessel. The purpose of the gravel is to prevent clogging of the slots in the bottom of the dip tube and promote good flow through the vessel. You can run the system without the gravel which might reduce the outlet pressure from the tank.

1) Make sure the inside of the tank is clean. Put a piece of tape over the top of the dip tube to stop anything from entering the pipe. Put the tube into the tank, resting the bottom of the tube in the depression in the center of the bottom of the tank. Load underdrain gravel until the slots in the bottom of the dip tube are covered by at least one (1") inch.
2) Next load the media being sure that nothing enters the top of the tube. Fill the tank to a maximum level of 6-8 inches below the top of the tank. The bed needs to have some room to expand during operation and back-wash, so you do NOT want the media to be up to the top of the vessel.
3) When the media has been loaded, take the tape off the top of the dip tube and slide the head down over the tube. The threads on the head should contact the tank and the head can be screwed into the tank. Do not raise the dip tube because it will NOT push down again and the media will have to be unloaded to seat tube again. DO NOT TIGHTEN THE HEAD TOO MUCH! The "O"-ring seals water tight and does NOT need to be squeezed very much to seal the tank.
4) Fill with water, check for leaks then proceed with start-up directions.

If you have any questions about how your bed is operating, please call General Carbon Corporation at 973-523-2223. Thank you for purchasing our products.

33 Paterson Street, Paterson, New Jersey 07501 Tel: 973 523 2223 Fax: 973 523 1494
www.generalcarbon.com www.sales@generalcarbon.com

START-UP INSTRUCTIONS

Liquid Phase Adsorbers

The proper start-up of liquid phase adsorbers is required for the best performance and the longest life of the carbon bed.

Activated carbon is hydrophobic and does not become wetted easily. As a result, General Carbon Corp. has developed a specific wetting procedure that will guide you in preparing your fresh bed to give you optimal results. This procedure has three stages; 1) **degassing**, 2) **fine removal**, and 3) **operation**.

1) **Degassing** is the process of wetting the internal pore structure of the carbon. A fresh carbon bed should first be filled with clean water from the bottom of the bed. Slowly introduce water into the bottom of the adsorber and allow it to fill the vessel. This allows air to escape through the top of the vessel as the water covers the carbon. Once full, it is best to allow the adsorber to soak as long as possible – overnight is best. This time allows the water to wet more of the internal pore structure and improves the carbons performance.

2) **Fine removal** is required to wash away the dust that is generated by handling the carbon particles. Carbon is friable and dust is created during handling. Backwashing is used to remove the fines. To backwash, put clean water into the bottom of the vessel. Start the flow slowly and reach peak flow over 2-5 minutes. The greater the flow available the longer the time you should take to reach full flow. The ideal flow rate is 10-12 gpm per square foot (using 12x40 carbon) of cross section area which will give you 20% bed expansion. At most sites, this flow rate is not available so you will have to use the maximum flow you can get. The backwash should run until the backwash effluent is clear – around 5-15 minutes.

3) After backwashing the unit can be put into **operation**. If increased backpressure develops during operation, this can be the result of particulate being filtered by the carbon bed. Backwashing the bed to remove the particulate will sometimes reduce this condition.

If you have any questions about how your bed is operating, please call General Carbon Corporation.

33 Paterson Street, Paterson, New Jersey 07501 Tel: 973 523 2223 Fax: 973 523 1494
www.generalcarbon.com www.sales@generalcarbon.com

GENERAL CARBON CORP.

PRESSURE DROP CHARACTERISTICS

CARBON: 8 X 30, 12 X 40, 20 X 50
LIQUID: WATER AT 86°F

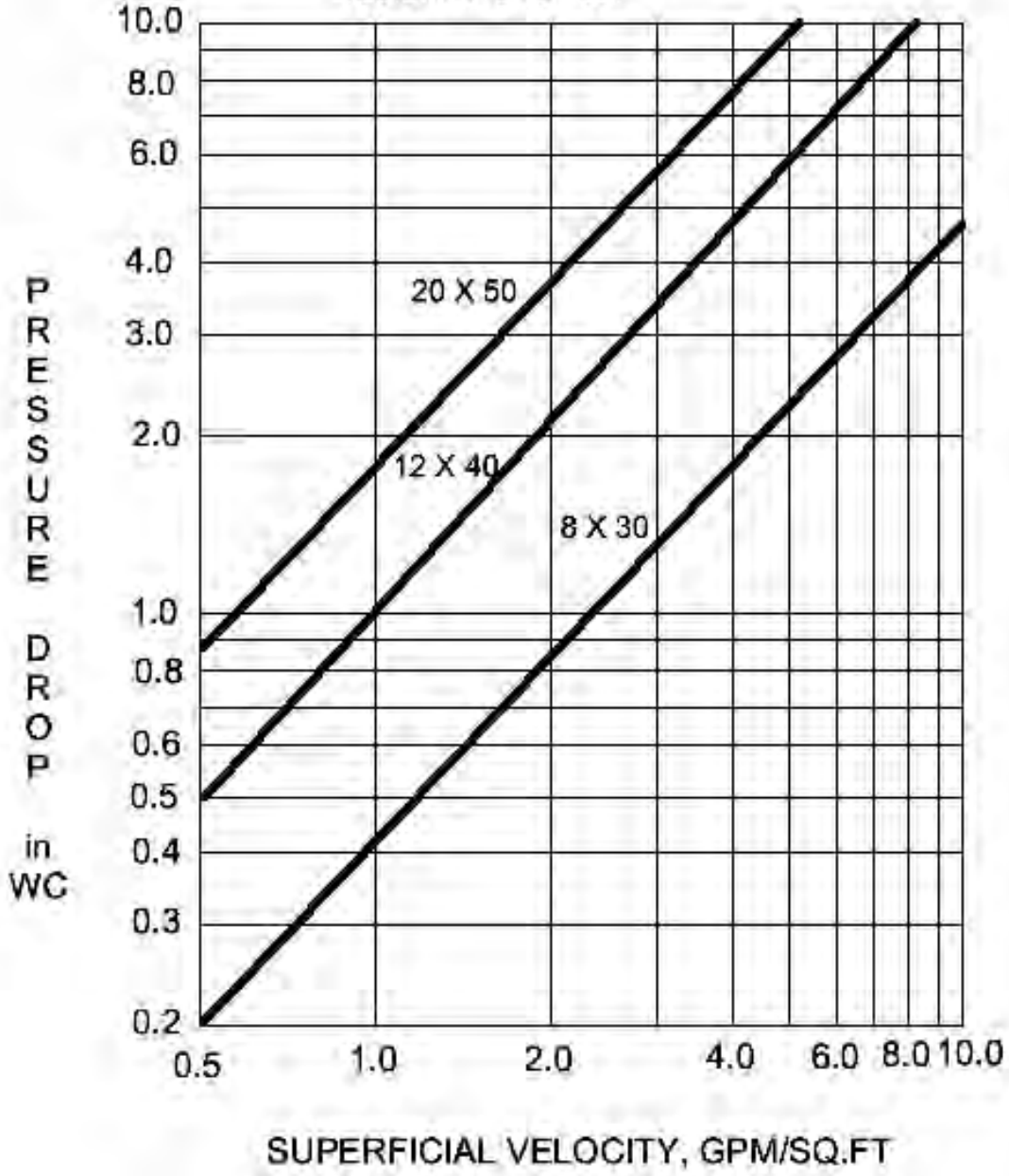

33 Paterson Street, Paterson, New Jersey 07501 Tel: 973 523 2223 Fax: 973 523 1494
www.generalcarbon.com www.sales@generalcarbon.com

GENERAL CARBON CORP.

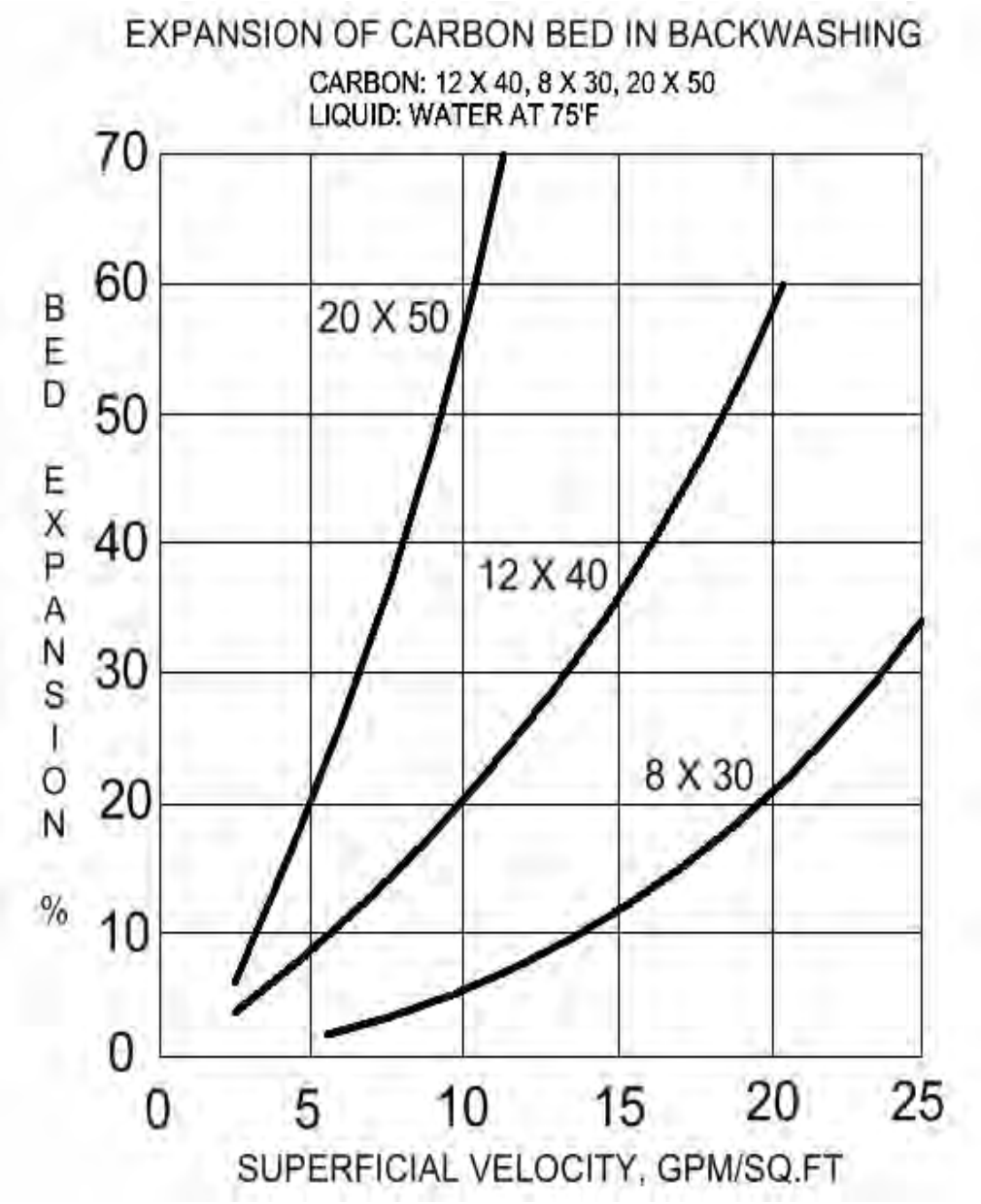

33 Paterson Street, Paterson, New Jersey 07501 Tel: 973 523 2223 Fax: 973 523 1494
www.generalcarbon.com www.sales@generalcarbon.com

ATTACHMENT 4

Bag Filter Change Out Directions

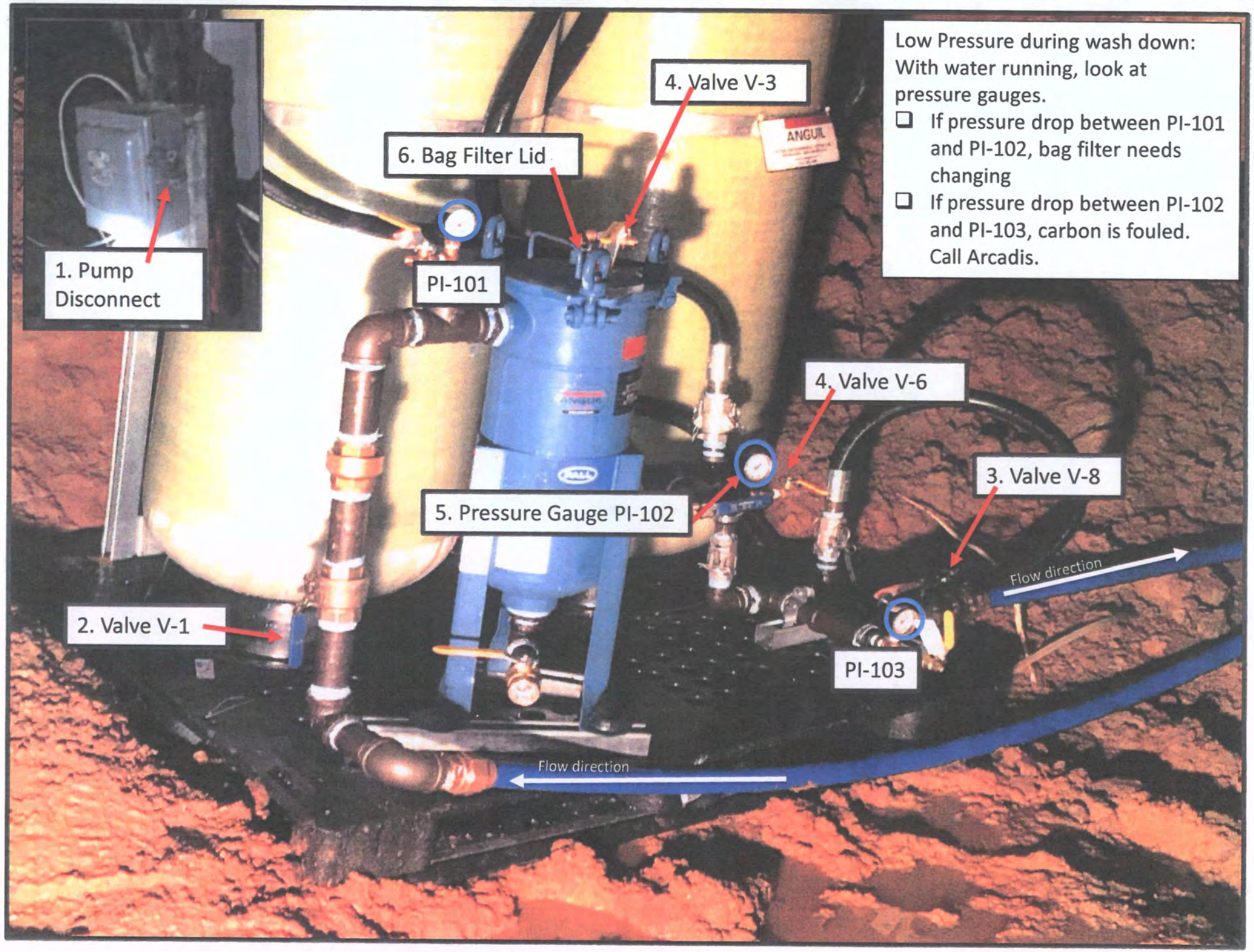
Low Pressure during wash down:
With water running, look at pressure gauges.
If pressure drop between PI-101 and PI-102, bag filter needs changing
If pressure drop between PI-102 and PI-103, carbon is fouled. Call Arcadis.
1. Pump Disconnect
6. Bag Filter Lid
4. Valve V-3
PI-101
4. Valve V-6
3. Valve V-8
5. Pressure Gauge PI-102
2. Valve V-1
PI-103
Flow direction
Flow direction

Bag Filter Change out Steps	Explanation
❑ 1. Lock out pump controller	With the pump controller disconnect box closed, pull the disconnect down to remove the knife switch. Place a lock to keep the disconnect in this location. Place a tag to identify who locked it out.
❑ 2. Close and lock out valve V-1	Close valve and place padlock to lock the valve in the closed positon to isolate the inlet side of the filter system.
❑ 3. Close and lock out valve V-8	Close valve and place padlock to lock the valve in the closed positon to isolate the outlet side of the filter system. This will keep the pressure in the lines while draining the bag filter and will prevent you from having to drain the entire wash water system when changing the bag filter.
❑ 4. Open valve V-3 or V-6	Release pressure in bag filter by opening valves. Pressurized water and air will spray from the bag filter.
❑ 5. Check gauge PI-102 to make sure reading 0 PSI	Read the pressure gauge, PI-102, to verify the pressure in the bag filter is at 0 psi.
❑ 6. Change bag filter	Using a screwdriver or similar tool, loosen the top of the bag filter and open. Remove the top plastic piece and remove the bag. Replace the bag filter with a new one (they're in the box marked "bag filter bags" in the electrical maintenance room built into the Gunpowder Room of the cavern). Replace the orange plastic top piece above the filter. Tighten the bag filter lid, making sure the O ring is properly seated and isn't pinched.
❑ 7. Close valves V-3 and V-6	This will seal back up the bag filter so it can hold pressure.
❑ 8. Unlock and open valve V-8	This will allow water to flow out of the filter system.
❑ 9. Unlock and open valve V-1	This will allow water to flow into the filter system.
❑ 10. Unlock pump controller and restart system	After removing lock and tag, move the disconnect switch to the up position to turn back on the pump.
❑ 11. Check for leaks at bag filter	Turn on the water at a spigot in the handrails or at the pressure tank and watch at the bag filter for any leaks while the system is running. Check pressure readings at PI-101 and PI-102 to see if they now read the same pressure.

ATTACHMENT 5

System Maintenance and Inspection Forms

GAC Water Treatment System
Maintenance and Inspection
TRW Automotive
La Jolla Spring Cave Complex
Stanton, Missouri

ARCADIS Design & Consultancy for natural and built assets

Inspection Date _____	Observation
Any leaks from above ground piping?	
Pressure at PI-101	
Pressure at PI-102	
Pressure at PI-103	
Test pressure gauge accuracy at PI-101 with gauge on sampling port	
Test pressure gauge accuracy at PI-102 with gauge on sampling port	
Test pressure gauge accuracy at PI-103 with gauge on sampling port	
Pressure drop across bag filter	
Was bag filter changed?	
Pressure drop across GAC filter	
Was GAC filter backwashed?	
Any signs of leaks along buried hose from stream to treatment system?	

Maintenance Conducted During Trip should be recorded in Maintenance and Repair Log for Site

Comments:

APPENDIX B

Air Controls Operation and Maintenance

B-3 Air Control Tracking

Meramec Caverns

Changes in Air Control Settings

Date and Time	Air Control	Setting Change

APPENDIX C

Maintenance and Repair Contacts and Log

Appendix C
Maintenance and Repair Contacts and Log
TRW Automotive
La Jolla Spring Cave Complex
Stanton, Missouri

ARCADIS Design & Consultancy for natural and built assets

Component	Manufacturer	Local Supplier	Local Repair and Installation
Vent Well System			
B-100 60 hp vent well blower (B-100)	Cincinnati Fan www.cincinattifan.com (513) 573-1000 7697 Snider Road Mason, Ohio 45040-9135	Cincinnati Fan www.cincinattifan.com (513) 573-1000 7697 Snider Road Mason, Ohio 45040-9135	T.R.E. Electric (573) 860-2515 751 N Service Rd E Sullivan, Missouri
B-101 15 hp vent well blower (B-100) Model HDBI-240 Blower Serial Number: 1604672, Motor Model Number: 0154SDSR41A-P	Cincinnati Fan www.cincinattifan.com (513) 573-1000 7697 Snider Road Mason, Ohio 45040-9135	Cincinnati Fan www.cincinattifan.com (513) 573-1000 7697 Snider Road Mason, Ohio 45040-9135	T.R.E. Electric (573) 860-2515 751 N Service Rd E Sullivan, Missouri
C-more Control Panel	Automation Direct 3505 Hutchinson Road 1-800-633-0405 Cummings, Georgia 30040	Automation Direct 3505 Hutchinson Road 1-800-633-0405 Cummings, Georgia 30040	T.R.E. Electric (573) 860-2515 751 N Service Rd E Sullivan, Missouri
Uninterruptible Power System SolaHD S1K Series	Sola HD www.solahd.com (800)377-4384 solahd.technicalservices@emerson.com	Sola HD www.solahd.com (800)377-4384 solahd.technicalservices@emerson.com	T.R.E. Electric (573) 860-2515 751 N Service Rd E Sullivan, Missouri
Vacuum Transmitters	WIKA Instruments, LP www.wika.us (888) 945-2872 1000 Wiegand Boulevard Lawrenceville, GA 30043	WIKA Instruments, LP (888) 945-2872 1000 Wiegand Boulevard Lawrenceville, GA 30043	T.R.E. Electric (573) 860-2515 751 N Service Rd E Sullivan, Missouri
Access Road Gravel and Grading	M.J. Schatz Backhoe Serice, LLC 314-560-0495 1092 Blanton Street Sullivan, Missouri 63080	M.J. Schatz Backhoe Serice, LLC 314-560-0495 1092 Blanton Street Sullivan, Missouri 63080	M.J. Schatz Backhoe Serice, LLC 314-560-0495 1092 Blanton Street Sullivan, Missouri 63080
Generator Fueling	--	Boland Oil Terry Boland 573-484-3232 or 636-239-9400 6651 Highway 185, Beaufort, MO 63013	--
Generator 50 KW Diesel Generator	MTU Onsite Energy www.mtuonsiteenergy.com (507) 625-7973 MN 56001, 100 Power Dr, Mankato, MN 56001	Central Power Systems & Services (314)623-1696 9407 Koenig Cir, St Louis, MO 63134	Central Power Systems & Services (314)623-1696 9407 Koenig Cir, St Louis, MO 63134

ARCADIS Design & Consultancy for natural and built assets

Component	Manufacturer	Local Supplier	Local Repair and Installation
GAC Cave Stream Treatment System			
Carbon Vessels FRP-18x65 fiberglass high pressure tanks	General Carbon (973) 523-2223 33 Paterson Street Paterson, New Jersey 07501	Anguil www.anguil.com Gunnar Peterson (414) 365-6400 Remediation Sales Manager 8855 North 55th Street, Milwaukee, WI 53223	Anguil www.anguil.com Gunnar Peterson (414) 365-6400 Remediation Sales Manager 8855 North 55th Street, Milwaukee, WI 53223
Bag Filter FSI Filter Vessel with 10 micron filter bags Filters part number BPONG25P1PWG	Filter Specialists, Inc. (FSI) (800) 348-3205 100 Anchor Road P.O. Box 735 Michigan City, IN 46361	Anguil www.anguil.com Gunnar Peterson (414) 365-6400 Remediation Sales Manager 8855 North 55th Street, Milwaukee, WI 53223	Anguil www.anguil.com Gunnar Peterson (414) 365-6400 Remediation Sales Manager 8855 North 55th Street, Milwaukee, WI 53223
Hose Connecting to GAC units: Goodyear Black Horizon air/ water hose. Rated for 200 PSI with EPDM inner tube and black EPDM cover. 1" ID	Anguil www.anguil.com Gunnar Peterson (414) 365-6400 Remediation Sales Manager 8855 North 55th Street, Milwaukee, WI 53223	Anguil www.anguil.com Gunnar Peterson (414) 365-6400 Remediation Sales Manager 8855 North 55th Street, Milwaukee, WI 53223	Anguil www.anguil.com Gunnar Peterson (414) 365-6400 Remediation Sales Manager 8855 North 55th Street, Milwaukee, WI 53223
Airlock Doors			
Airlock Doors Aluminum Framed Storefront and Entrance Doors	Oldcastle Building Envelope 1-866-OLDCASTLE 2425 Olumpia Boulevard, Suite 525 E Santa Monica, CA 90404	Coverdell Glass and Mirror (573) 885-4199 502 South Franklin St Cuba, MO 65453	Missouri Hometown Builders, LLC John Brice (573) 241-6889 jbrice57@yahoo.com PO Box 15, Steelville, MO 65565
Front Entrance Wall Windows			
Windows with Remote Opening	Andersen Windows and Doors 1-800-426-4261	Meek's Hardware (573) 468-4103 10875 North Service Road Bourbon, MO 65441	Missouri Hometown Builders, LLC John Brice (573) 241-6889 jbrice57@yahoo.com PO Box 15, Steelville, MO 65565

ARCADIS Design & Consultancy for natural and built assets

Component	Manufacturer	Local Supplier	Local Repair and Installation
Amphitheater Entrance			
Siding and screened doors enclosing the amphitheater	Missouri Hometown Builders, LLC John Brice (573) 241-6889 jbrice57@yahoo.com PO Box 15, Steelville, MO 65565	Missouri Hometown Builders, LLC John Brice (573) 241-6889 jbrice57@yahoo.com PO Box 15, Steelville, MO 65565	Missouri Hometown Builders, LLC John Brice (573) 241-6889 jbrice57@yahoo.com PO Box 15, Steelville, MO 65565
Subslab Depressurization and Vault Ventilation Systems			
Inline Duct Fan, Controller, and Damper Fantech Model # FR 160, VT20M, RSK6	Fantech (800) 747-1762 Ussupport@fantech.net	Grainger www.grainger.com 1-800-472-4643	T.R.E. Electric (573) 860-2515 751 N Service Rd E Sullivan, Missouri

Notes:
Any maintenance needs identified by MCE should be reported to TRW. TRW will work with MCE to create a plan for repairing or maintaining the system of concern.

Appendix C
Maintenance and Repair Contacts and Log
TRW Automotive
La Jolla Spring Cave Complex
Stanton, Missouri

ARCADIS Design & Consultancy for natural and built assets

Maintenance and Repair Log for Meramec Caverns				
Date	Component	Reason for Maintenance or Repair Needed	Local Supplier Used	Local Repair and Installation Contractor Used

APPENDIX D

Basis of Vent Well Design

MEMO

ARCADIS Design & Consultancy for natural and built assets

To:
Tonya Howell - USEPA
Paul Jack – TRW
Kenny Hemmen - Geotechnology

Copies:
John Shonfelt - ARCADIS

Arcadis U.S., Inc.
Rosehill Office Park 1
8725 Rosehill
Suite 350
Lenexa
Kansas 66215
Tel 913 492 0900
Fax 913 492 0902

From:
Royce Face / Mike Cobb

Date:
May 16, 2016

Arcadis Project No.:
KC001590.0006

Subject:
Basis of Design
Meramec Caverns' Vent Well System

The Basis of Design for the Meramec Caverns ventilation system is based primarily on data collected over the last two years, the structure of the cavern and the current/intended cavern use. The goal is to use ventilation of the developed portion of the cavern to return the cavern to unrestricted use by its owners. This memo covers the proposed ventilation rates and the equipment sizing and specification to achieve the proposed ventilation rates.

The developed portion of the facility/cavern is divided in three general areas (Figure 1).

- Area 1 - The entrance building – located in the primary entrance to the cavern, including the gift shop, cafeteria, offices, restrooms, kitchen and storage areas. An attempt has been made to separate the air space of the entrance building from the remainder of the cavern utilizing a sliding glass door and an air curtain. While not completely successful, additional actions are being evaluated including an upgraded HVAC system that allows maintaining positive pressure within the entrance building using clean outside air, and disconnecting the air curtain to reduce mixing of entrance building air and cave air.

- Area 2 – The area up-cave from the entrance building and down-cave of the main cavern including the so-called "Ballroom" and [any other named areas]. An airlock has been constructed to minimize mixing of air between the main cavern (Area 3) and this Area 2. While the airlock has improved air quality in Area 2, there are still higher than acceptable TCE concentrations and there are ancillary

issues such as excessive condensation resulting from ventilating this area with warm humid air. As with Area 1, additional actions are being evaluated or conducted including improving the airlock doors (ongoing), air treatment with granular activated carbon (GAC) within Area 2 (on-going), and modified ventilation (testing to be conducted following completion of airlock doors).

- Area 3 – The main portion of the cavern up-cave from the airlock doors that defines one end of Area 2. This developed portion of the cavern is in direct connection with the up-cave undeveloped portion of the cavern that is believed to be the source of the TCE vapors. In addition, the cave stream flows through this portion of the cavern. The stream flow is approximately 5 cubic feet per second (except during periods of heavy precipitation). TCE is present in the stream at a fairly consistent concentration of 3-5 µg/L with short term concentrations as high as 13.2 ug/L. The cave stream discharges to the Meramec River via a siphon approximately halfway between the airlock and the second cavern opening at the so-called Amphitheater. With the airlock in place, air flow in and out of the cavern occurs through the Amphitheater, where at the current time, there are no restrictions to flow. Additional flow likely enters and leaves the main portion of the cavern through secondary features (including so-called Mud Alley and the Atomic Shelter Passage, as well as unidentified solution features and fractures), but air measurements indicate that the bulk of the flow occurs along the main stem of the cavern, exiting and entering at the Amphitheater.

Historically, TCE was detected in cave air at concentrations above 1,000 µg/m^3. Over the last two years, concentrations have been measured at concentrations up to 660 µg/m^3 and routinely exceeding 100 µg/m^3. While low concentrations of TCE are present in the cave stream (up to 5 µg/L), the predominant source of TCE in air is believed to be up-cave from the developed portion of the cavern.

Ventilation Requirement Evaluation

<u>Air Flow</u>

Air flow into and out of the cavern closely tracks outside temperatures. The cavern is a near-constant 57 degrees with little seasonal or diurnal variation. Air flow within the cavern has been measured using an ultrasonic anemometer acquired and set up by the USGS. Continuous air flow data has been collected since early September 2015 (except for approximately one month in early 2016 when cavern flooding interrupted data collection). Continuous air temperature monitoring is available for outside the cavern since July 2014. Additional high and median temperature data is available from December 2013. Based on the available data, the following conclusions have been reached:

- When outside temperatures exceed 57 degrees, air flows out of the cavern. The rate of air flow closely tracks outside temperatures.

- While the instantaneous flow data is noisy, the greatest variations occur at the warmest temperatures, which also correlate with larger attendance (afternoons of warm summer days). Given the sensitivity of anemometer readings to air movement (which are low – approximately 25 ft/min maximum), it is assumed that the noise in the data is a result of tour activities (opening and closing of airlock doors, tour groups passing the anemometer, etc.). Cleaning up the data using a 75 minute rolling average (Chart 1), the flow data and temperature data tracks closely between 9/16/15 and 9/21/15, the period of time where both 1) data is available for outside temperature and air flow at the so-called Jungle

Room and 2) outside temperatures and the resulting flow out of the cavern are near the highest instantaneous levels.

- Temperature data charts (2 and 3) indicate that temperatures for 2014 and 2015 are similar and that while peak temperatures reach as high as 98 degrees, the duration of high temperatures is short. Based on the more detailed 2015 data, peak temperatures are reached for less than an hour per day. Thus, a rolling 60 minute average temperature (Chart 4) best reflects target temperature and associated air flow rates for system design.

- Where outside temperatures are below 57 degrees, air flows into the cavern. While the rate of air flow tracks outside temperatures, their correlation is not as strong as with higher temperatures. Chart 5 shows unsmoothed flow data for mid-February, the coldest period where flow data is available.

- While inflow data does not track as cleanly as outflow data, the basic relationship holds, with inflow where temperatures drop below 57 degrees.

- A blower test and a shut-in test are being evaluated for the Amphitheater (current discharge/entrance point of cave air flow). The Amphitheater opening would be sealed and put under pressure in a series of flow steps while monitoring air flow in the Jungle Room. Following the blower test, a shut-in test of up to 24 hours would be conducted to determine the effect of sealing the Amphitheater on air flow.

TCE Concentrations

The available air-sampling results suggest that changes in TCE concentrations in the main portion of the cavern (Area 3) are primarily correlated with air residence-time in the cavern, which is a function of air-flow patterns (direction and velocity) integrated over a period of multiple days. Qualitatively, TCE concentrations are lowest in the winter, when there is a consistent input of outside air entering the cavern's lower openings. Concentrations are higher in summer months when the airflow direction is reversed, and the travel time of air before reaching the toured passages is longer. Transitional periods, when airflow is neither consistently up-cave nor down-cave, produce highly variable TCE results, reflecting the wide-range of air-residence times. The highest observed TCE concentrations are interpreted to appear after periods of relative stagnation, followed by warm weather that flushes air from the cavern through the lower entrances. These concentration trends are illustrated on Charts 3 and 6, with sampling data from the Jungle Room, the most up-cave sampling station:

- Consistent flow down-cave (out of the cavern) results in elevated TCE samples, exceeding 200 $\mu g/m^3$.

- Consistent flow up-cave (in to the cave over a period of at least 2-3 days) results in TCE concentrations below 20 $\mu g/m^3$.

- Mixed conditions where flow occurs in and out of the cavern over the previous 2-3 days results in concentrations between 20 $\mu g/m^3$ and 660 $\mu g/m^3$.

- Volatilization of TCE from the cave stream to vapor phase is likely occurring, but although there is a short section of falling water present between the so-called Loot Rock and the Amphitheater that promote volatilization, the empirical evidence (low concentrations of TCE at the Jungle Room during

consistent up-cave flow, no significant change in dissolved concentration over the length of the developed portion of the cavern) indicates that the contribution is likely to be low.

Design Assumptions:

The general design assumptions for the cavern ventilation system are as follows:

- Peak extraction rates should be sufficient to remove the maximum down cave flow during the periods of highest outside temperatures; periods of time that also correlate with the highest rate of visitors to the cavern, i.e., afternoons of warm summer days. Based on currently available data, peak air flow out of the cavern is approximately 4,000 cfm at temperatures of 90 degrees (based on 60 minute rolling average).
    - The calculated air flow data is based on a single anemometer located within a constricted area of the cavern. While the data appears to be consistent with periodic hand measurements, the low velocities of air flow and the irregular shape and surface of the cavern make precise measurements difficult. However, limited independent measurements of air flow by an HVAC contractor indicated flow from the cavern at 2,300 scfm at 46 deg. F., roughly consistent with the anemometer data. While the data appear to be generally accurate, there remains a degree of uncertainty.
    - In general terms, the calculated air flows appear to be consistent with vapor concentration data. It is noted that concentrations change relatively quickly under both up flow and down flow conditions, confirming the presence of significant air flow relative to cavern volumes.
- Low TCE concentrations in the Jungle Room appear to correlate with consistent up-cave air flow, rather than with maximum up-cave air flow rates. Air flow rates will be designed to achieve consistent "Winter Conditions" with continuous flow up-cave from the entrance to the ventilation points.
    - Ventilation rates are designed for capturing the flow down cave, but due to the volume of the cavern, do not reflect an attempt to achieve a particular air exchange rate. The rate of up-cave flow needs to be sufficient to address secondary sources of TCE entering the cave air from 1) volatilization from the cave stream, 2) desorption of the cave surfaces, and 3) ancillary contributions of TCE from the Atomic Storage Cavern or other secondary conduits.
    - The specific air exchange rate required to address secondary sources has not been estimated because empirical data indicates that relatively modest up-cave flow will address the secondary sources. Due to the relatively slow contribution from the secondary sources, this additional flow does not need to occur on an instantaneous basis (on top of the 4,000 cfm required for short periods of high temperatures), but on a daily average rate. While likely the least developed design parameter, a reasonable estimate of the rate of up-cave flow (over and above the rate required to capture down-cave flow) of 2,000 cfm above the daily average (Chart 1) will be used.
- A blower test and a shut-in test planned at the Amphitheater have the potential to determine if modifications at this location can be utilized in controlling ventilation requirements. As discussed above, the Amphitheater opening would be sealed and put under pressure in a series of flow steps

while monitoring air flow in the Jungle Room. Following the blower test, a shut-in test of up to 24 hours would be conducted to determine the effect of sealing the Amphitheater on air flow. While these data may not be available for review during the installation of the ventilation system, results may impact system operation.

- Given the unintended consequences that have accompanied other modifications to the cavern, it is important to be able to modulate air flow if necessary based on post implementation monitoring. There are some potential consequences to moving more air than necessary including raising or lowering cavern temperatures, condensation in the Amphitheater (and potentially within the developed portions of the cavern), and accelerating air contribution from secondary sources at an unknown rate.
  - Controls will allow for air flow rates to be varied with outside temperatures, reducing air flow under cooler conditions and not running at all under low temperature conditions.
  - Reducing air flow rates when possible has the potential to significantly reduce both operating costs and wear and tear on the ventilation equipment.
  - Monitoring of cavern conditions (independent of blower controls) will be conducted to confirm air flow direction and rates) and to allow for optimization and troubleshooting during long term operation.

A summary of the ventilation requirements:

- Long term flow equivalent to 5,000 cfm to achieve a daily average of 2,000 cfm up-cave during the periods of maximum down-cave flow. At a 30% safety factor, the system will require a minimum flow of 6,500 cfm to achieve this requirement. However, as a redundant measure, a second vent well was installed to increase the attainable flow rates. Therefore, a maximum flow of greater than 10,000 cfm can be achieved from the two vent wells as the blowers are configured to be able to run simultaneously on individual vent wells (3,750 cfm on one vent and 7,500 cfm on the second) which results in a safety factor exceeding 100%.
- Controls of air flow rate to optimize performance and minimize the potential for unintended consequences associated with over venting.
- Reliable and where feasible, redundant systems that will limit potential downtime.

Ventilation Components

<u>Vent Shafts</u>

The vent shaft locations are up-cave of the uppermost developed portion of the cavern (VW-1 and VW-2 on Figure 1). At this location, there is approximately 200 ft of dolomite between the top of the cavern and the ground surface.

- Known site conditions indicate the potential for air-filled voids, clay-filled voids, perched groundwater, chert, and sections of broken rock. Each of these conditions complicates both drilling and casing installation.
- Geophysics conducted near the shaft locations confirms potential for air-filled voids and clay filled voids in the area; however, no apparent voids were identified within the upper 100 feet at the immediate drilling locations.

- Discussions with the selected driller, who has experience in drilling into mine shafts at Doe Run (a regional lead mining company), indicated that while not common, damage to shaft roofs during penetration is possible.

An inside casing diameter of 12.56 inches can be achieved using available air rotary drilling equipment/techniques.

Based on air flow requirements, the following conclusions were reached:

- While design flows can be achieved using a single shaft, vacuum and resulting energy costs are relatively high.
- A second boring 1) provides redundancy should problems arise from a single shaft, 2) reduces vacuum and energy requirements at any given air flow rate, and 3) increases the overall ventilation capacity of the system should the initial air flow readings be significantly understated.
- While a second boring has significant advantages there are concerns that drilling conditions may prevent the installation of the second shaft. Thus, target flow rates need to be achievable using a single shaft.
- The second boring will be located at approximately 50 ft centers. This is 1) to minimize the stresses associated with two closely spaced cavern penetrations, and 2) leave the first shaft accessible (not covered by rig) during installation of the second shaft (should it be necessary to start venting prior to completion of the second shaft).

Ventilation Equipment

Based on a 210 ft shaft constructed of carbon steel, the following is a summary of the equipment components:

Component	Requirements	Vendor	Comments
Vent Shafts	210' deep 12.56" diameter (nominal) Steel casing from surface to within 20 ft of cavern roof Centered on cavern axis Spaced minimum of 40 ft, maximum of 50 ft.	Pense Bros. Drilling	Pressure drop calcs assume carbon steel casing that is likely to corrode heavily during service life (20+ yrs)
Noise Suppressor (in cavern)	Maximum pressure drop of 1" H2O Attaches via 12" shaft socket in rock or fastens to roof	C&R (Sub to Geotechnology – MC Consultant)	C&R handling design Method of attaching to shaft still undetermined Designed to minimize noise caused at entrance into shaft Concern regarding safety of installation inside cavern – need to confirm roof stability prior to installation
Noise Suppressor (Blower Discharge)	Achieve 75 dB or lower at maximum flow (within drill pad clearing). Minimize discharge pressure loss	PLC	Long lead item – may not be installed prior touring initial operation. Individual mufflers on each blower

Component	Requirements	Vendor	Comments
Manifold/plenum Manifold/plenum (continued)	Minimize pressure drop Allow operation of individual blowers on individual shafts (assuming both are installed) Allow operation of both vent shafts by either blower Drain ports for condensate	PLC	18" pipe (nominal 16" I.D.) above grade to minimize pressure drop in transport piping and header. Duct valves or pneumatic conveyance type butterfly valves on manifold PVC or HDPE acceptable on inlet side of blower(s) Mechanical connections (such as Fernco type fittings) acceptable at wellhead and outside building. Likely require PVC pipe with standard steel dimension. Insulate outside sections of pipe/plenum to minimize condensation during winter operation
Blowers	Two blowers for redundancy Large blower capable of meeting air flow requirements from single air shaft (7,500 cfm @ 25" H2O vacuum). Can operate effectively down to 2,000 cfm. Small blower capable of meeting air flow requirements from two air shafts (7,500 cfm @ 7" H2O). Can operate effectively down to 2,000 cfm). Can move up to 3,750 cfm from single shaft No vapor treatment required	Cincinnati Blower – provided in package from PLC	Blower of same design as typical air stripper blower – very dependable over long term continuous operation Able to operate large blower on skid temporarily following installation of first shaft
Controls	Variable Frequency Drives (VFD)s control blower motors to control extraction rates from the cavern Programmable Logic Control (PLC) and Human Machine Interface (HMI) Optional - Transfer Switch to allow operation of the system using generator if necessary	Arcadis - Design Controlwerx - Mfg	Designed to allow operation of large blower on temporary basis after installation of first shaft PLC and HMI will be used for automated control, remote monitoring, automated system performance data logging and automated alarm notifications.
Electrical Service	200 amp – 480v 3ph power at blowers	PB Electric (MC contractor)	200 amp 480v service. Electrical Contractor
Instruments	Air Flow – Thermal Mass Air Flow Meter Vacuum – Diff Pressure transmitters and gauges Ambient Temperature monitoring	PLC – incorporated into building package	Minimal instrumentation – VFD operation will be based on outside temperature. Single air flow meter that can be moved between blowers

Component	Requirements	Vendor	Comments
Enclosure	Designed to contain both blowers, manifold, and instrumentation. Controls will be mounted on outside of enclosure to minimize enclosure size Room for storage of one bare blower if determined to be necessary.	PLC	Enclosure entrance sized to allow placement of large blower into building on site.

Blower Sizing

Given the level of uncertainty in the rate of air flow required at peak temperatures, the blower was sized to allow maximum ventilation rates given the constraints of a 200' 12" casing (and to a lesser extent, the size of electrical service available). A flow of 7,500 cfm at 25" water vacuum requires a 60 hp blower. Increasing flow beyond 7,500 cfm results in a dramatic increase in hp for relatively modest increases in flow.

Pressure drop calculations were made for the following assumptions:

- Calculations for 6,500 cfm (one shaft) and 3,250 cfm (per shaft for two shafts). Minimum design requirements. Initial sizing indicated a 7,500 cfm blower. Given the uncertainties in the data, the larger blower has been retained to increase the S.F. above 30%.
- 12.56" carbon steel casing. A roughness coefficient 0f 8.5 x 10-4 was assumed to account for future corrosion of the casing
- 210 ft of steel casing. The bottom 10 to 15 ft of the shaft will be bare rock which will increase losses slightly
- Manifold/plenum is still being designed, but piping will be upsized to minimize pressure losses. Losses will be highest in two shaft scenario. Losses are estimated using a total of 4 elbows (equ. of 120 ft of additional piping)
- Full port duct type butterfly valves (or equivalent) will be installed to allow flexibility in blower operation (one blower on each well or either blower operating both wells).

Pressure drop calculations are attached.

APPENDIX E

Vent Well Construction Logs

ARCADIS

Well Construction Log

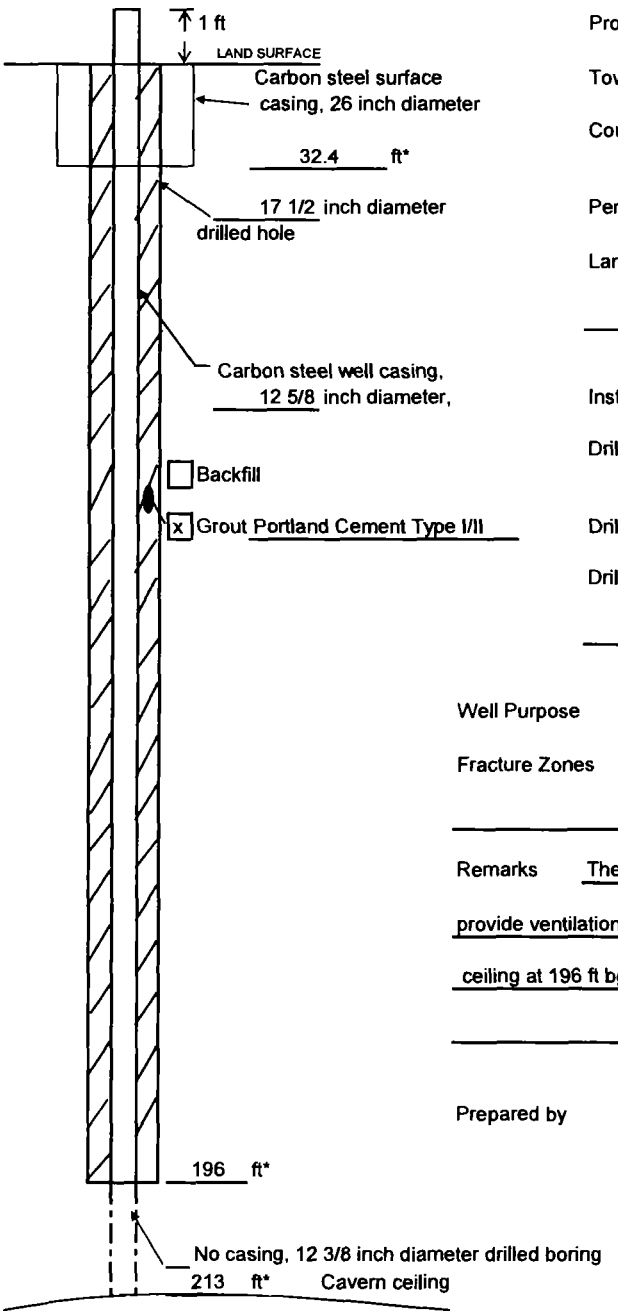

Project	KC001590.0006	Well	VW-1
Town/City	Stanton, Missouri		
County	Franklin	State	MO
Permit No.	N/A		

Land-Surface Elevation and Datum:

800.2 feet [x] Surveyed [ ] Estimated

Installation Date(s)	April 14, 2016 to May 2, 2016
Drilling Method	air rotary and air hammer
Drilling Contractor	Pense Bros. Drilling
Drilling Fluid	Air

Well Purpose	Air ventilation well for cavern
Fracture Zones	

Remarks The boring was drilled to intercept the cavern below to provide ventilation to the cavern. The boring broke through the cave ceiling at 196 ft bgs. The cavern floor is at 228.5 ft bgs.

Prepared by Will Stephens, Grace Philpy

228.5 ft. Cavern floor

Measuring Point is Ground Surface.

* Depth Below Ground Surface

ARCADIS

Well Construction Log

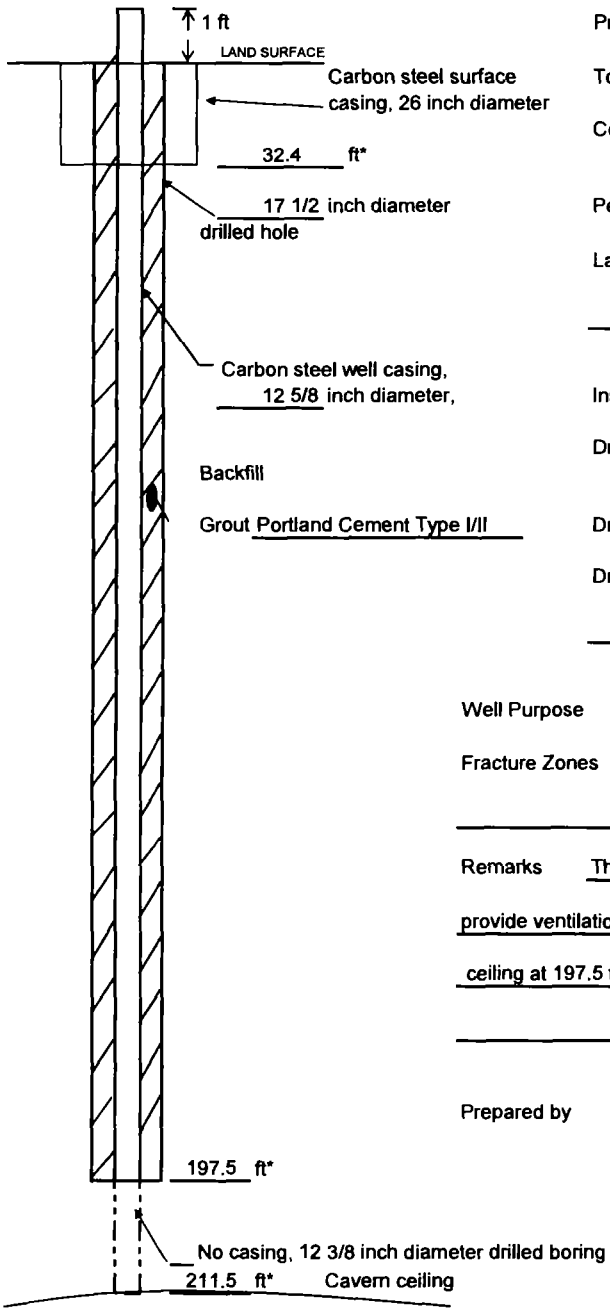

Project	KC001590.0006	Well	VW-2
Town/City	Stanton, Missouri		
County	Franklin	State	MO
Permit No.	N/A		

Land-Surface Elevation and Datum:

800.2 feet [x] Surveyed [ ] Estimated

Installation Date(s)	April 14, 2016 to May 2, 2016
Drilling Method	air rotary and air hammer
Drilling Contractor	Pense Bros. Drilling
Drilling Fluid	Air

Well Purpose	Air ventilation well for cavern
Fracture Zones	

Remarks The boring was drilled to intercept the cavern below to provide ventilation to the cavern. The boring broke through the cave ceiling at 197.5 ft bgs. The cavern floor is at 227 ft bgs.

Prepared by Will Stephens, Grace Philpy

227 ft Cavern floor

Measuring Point is
Ground Surface.
* Depth Below Ground Surface

APPENDIX F

Secondary Effects Monitoring Work Plan

Michael Cobb
Principal Scientist

Royce Face, P.E.
Principal Engineer

John P. Shonfelt, P.G.
Senior Project Manager

SECONDARY EFFECTS MONITORING WORK PLAN

La Jolla Spring Cave Complex
Stanton, Missouri

Prepared for:

TRW Automotive U.S. LLC

Prepared by:

Arcadis U.S., Inc.
Rosehill Office Park 1
8725 Rosehill
Suite 350
Lenexa
Kansas 66215
Tel 913 492 0900
Fax 913 492 0902

Our Ref.:

KC001590.0006

Date:

April 12, 2018

ARCADIS Design & Consultancy for natural and built assets

TRW Automotive U.S. LLC

Secondary Effects Monitoring Work Plan

La Jolla Spring Cave Complex
Stanton, Missouri

April 12, 2018

CONTENTS

Acronyms and Abbreviations ii
1 Introduction 1
1.1 Background 1
1.2 Objectives 3
1.3 Limitations 3
2 Scope of Work 5
2.1 Mold Assessment 5
2.2 Preliminary Assessment and Sensitive Feature Inventory 6
2.3 Observation and Activity Tracking 6
2.4 Routine Monitoring 7
2.4.1 Evaporation Rate 7
2.4.2 Drip Water Conductivity 7
2.4.3 Temperature and Relative Humidity 7
2.4.4 Observation Check-ups 8
3 Communications and Reporting 9
4 Schedule 10
5 References 11

FIGURES

Figure 1. Cavern Layout
Figure 2. Secondary Effects Climate Monitoring Locations

APPENDICES

A Secondary Effects Tracking Field Form

ACRONYMS AND ABBREVIATIONS

µg/m^3	micrograms per cubic meter
MCE	Meramec Caverns Enterprises, Inc.
MDNR	Missouri Department of Natural Resources
TCE	trichloroethene
TRW	TRW Automotive U.S. LLC
USEPA	United States Environmental Protection Agency

1 INTRODUCTION

This work plan describes supplemental tasks planned to monitor secondary effects potentially associated with operating air controls at the La Jolla Spring Cave Complex (cavern), located in Stanton, Missouri. The air controls include a combination of active and passive measures that control air flow in the cavern to reduce concentrations of trichloroethene (TCE) in cave air. These controls, and associated monitoring, were completed in accordance with the Phase 2 Cave Air Work Plan (Arcadis, February 2, 2016) and Phase 2 Addendum Air Controls Work Plan (Arcadis, July 15, 2016).

This work plan specifically considers secondary effects, defined as significant changes to the cavern resulting from implementation of the air controls that may impact its use as a show cave (as discussed further below). Ongoing operation and maintenance of the air controls and monitoring for TCE is described separately in the Post-Removal Site Control Work Plan submitted to the United States Environmental Protection Agency (USEPA) and Missouri Department of Natural Resources (MDNR).

The air controls and associated monitoring tasks are a collaborative effort of Meramec Caverns Enterprises, Inc. (MCE) and TRW Automotive U.S. LLC (TRW).

1.1 Background

The La Jolla Spring Cave Complex is a natural cave system in Franklin County, Missouri. Figure 1 shows the layout of the cavern and its key features. A portion of the cavern is privately owned and operated as a tourist attraction. The toured areas of the cavern have been divided into three areas: Area 1, comprising the entrance building; Area 2, comprising the developed areas of the cave between the entrance building and the airlock; and Area 3, comprising the developed areas of the cavern behind the airlock. A stream flows through Area 3 from west to east, discharging to the Meramec River at La Jolla Spring.

Sampling has identified TCE in both the cave stream and cave air. Air controls installed between March and November 2016 are designed to maintain TCE concentrations in cave air below 6.0 micrograms per cubic meter ($\mu g/m^3$) averaged over an 8.5-hour exposure period, as specified by USEPA. The three principal air-controls are:

- An airlock that restricts movement of air between Areas 2 and 3 of the cavern
- A vent-well system that exhausts air from the cavern through boreholes drilled into the cave just up-cave (west) of Area 3.
- Two sub-slab depressurization systems and a vault ventilation system that mitigate vapor intrusion through the floor slabs inside the entrance building, and just inside the cavern at that the cavern's main entrance.

Prior to development as a tourist attraction, the cavern's natural airflow patterns and microclimate (e.g., temperature and humidity) were primarily controlled by convective air circulation through natural cave openings driven by the temperature contrast between the cave and outdoors. Over decades of development and operation (and prior to implementation of the air controls), the cave environment has been altered in multiple ways:

- Modifications completed by MCE and its predecessors to make the cave suitable and accessible for public tours, including (but not limited to) excavation of constricted passages, construction of a buildings enclosing the primary cave entrances, construction of ventilation wells in the Wine Room, installation of various man-made structures and walkways, use of water to fill pools, clean walkways, and douse the "theater curtain", and operation of lights in toured areas
- The visitation of large numbers of people to the cave each year, introducing moisture, heat, and outdoor particulates into the cavern
- Natural events, such as floods, that temporarily saturate normally dry areas, and erode or deposit sediment throughout the cave

This combination of natural and anthropogenic factors has altered the cave environment via changed temperature, increased or decreased moisture, and the introduction of materials foreign to the cave. Most changes to the cave environment are not considered harmful to business operations or to the condition of sensitive cave features (i.e., speleothems) that are a valued component of the cave tours. Certain potential secondary effects, however, are a recognized concern of MCE. These potential secondary effects include:

- Condensation on surfaces where it may create a slip hazard
- Excess fog that interferes with tours
- Fungal growth on built cave features (e.g., wooden displays) that is unsightly, damaging to the features, or a potential concern as an allergen
- Fungal growth on natural cave features (e.g., rock or sediment) that is unsightly or a potential concern as an allergen
- Condensation corrosion of sensitive cave features, wherein excess condensate causes dissolution of a cave feature
- Desiccation of sensitive cave features, wherein excessive evaporation causes a sensitive cave feature to dry out
- Accelerated precipitation of minerals on cave surfaces (e.g., cave milk)

The Phase 2 Air Controls Work Plan included several tasks intended to limit secondary effects, or monitor potential changes to the cave environment, caused by the air controls. These include:

- Reconstruction of the main entrance wall to improve air-sealing in order to control condensation observed inside the front area of the cave in the summer after installation of a temporary airlock in 2015
- Continuous monitoring for temperature and relative humidity in five locations within the cave, starting in May 2016.

1.2 Objectives

Due to the presence of TCE in cave air, the primary requirement for continued operations of the cavern as a tourist attraction is maintaining tour-guide exposure concentrations of TCE in air at or below 6.0 µg/m^3 averaged over an 8.5-hour work day. Maintaining low TCE levels requires operation of air controls, most critically the vent-well system and the airlock.

Normal cave operations also require that, to the extent feasible, implementation of the air controls does not degrade the cavern as a tourist cave attraction. Some considerations include:

- Limiting secondary effects that may cause safety concerns (e.g., condensation on walkways)
- Limiting secondary effects that are unsightly or restrict full use of the cave infrastructure (e.g., mold)
- Limiting environmental changes that may degrade cave features that contribute to the tour experience.

The objectives of this monitoring plan are to understand current cave conditions that may be adversely affected by the air controls, differentiate effects caused by air controls from other factors, evaluate seasonal influences, and determine whether observed conditions are stable or trending in ways that may pose a concern.

1.3 Limitations

Monitoring for potential secondary effects potentially associated with the air controls is subject to several limitations:

- The monitoring plan is not designed to evaluate the cavern relative to pristine conditions. The cavern was not in a natural state prior to implementation of the air controls and has not been since the early 20th century when it was developed into a show cave. In fact, the usability of the cavern as a show cave is dependent on the changes made by MCE to accommodate large numbers of human visitors. Those changes have altered the natural cave environment. The air controls now in place are also essential cave improvements needed to allow the cave to operate. The goal, therefore, of secondary effects monitoring is not to attempt to compare the cave against an undeveloped state, but to gather data that can help determine the best way to operate and/or improve the air controls to limit potential changes to the cave that may impact its use as a show cave.
- The monitoring plan is also limited by the lack of objective baseline data. There are only limited data and documentation of cave conditions prior to implementation of the air controls. No true baseline of cave conditions exists to which current observations can be compared. Actual cave conditions are known to vary seasonally, or as a result of major storms, draughts, and other climatic conditions; therefore, measured conditions may not be easily characterized as outside the range of pre-existing conditions.

- It is also important to note that the cave environment is naturally harsh to constructed features. The constant high humidity and periodic flooding promote rot or mold on wood or other organic materials, rust of metal features, and take a toll on electrical and plumbing systems. Constant deterioration is the norm within the cavern, so that it is only through diligent maintenance that the infrastructure (much of it decades old) is kept in working order. In this context, differentiating secondary effects potentially associated with implementation of the air controls is not clear-cut. In some cases, the air controls may simply contribute to an issue that existed previously, and some observed effects may be merely coincidental or went unnoticed prior to the heightened scrutiny brought by implementation of the air controls.

2 SCOPE OF WORK

Secondary effects monitoring will entail a combination of quantitative data collection and direct observations, including:

- A mold assessment (completed October 2016) to evaluate the nature and extent of mold-growth
- A preliminary assessment of sensitive cave features and current conditions for comparison against future observations
- Ongoing observation and activity tracking by MCE staff to document new or changed conditions observed during normal operations and activities (such as mold cleanup) that are potentially associated with operation of the air controls
- Routine monitoring, including observational checkups on new or previously identified areas of concern, and measurement of parameters (e.g., temperature and evaporation rate) that may aid in identification or troubleshooting of secondary effects.

These scope elements are further described below. Note that this plan does not encompass any potential corrective actions, should a secondary effect be observed. TRW anticipates that any potential actions will be discussed with MCE on a case-by-case basis, considering whether the available data and conceptual site model support that the effect is related to operation of the air controls, and weighed carefully against the primary, overriding requirement of maintaining TCE concentrations at or below 6.0 $\mu g/m^3$ averaged over an 8.5-hour exposure period.

Where a cause/effect relationship is found to exist, TRW will evaluate whether changes can be made that reduce or eliminate the cause of the secondary effect, while remaining effective as a TCE air control. For instance, in 2016, TRW worked with MCE to modify existing operations (e.g., use of the entrance wall fan and windows) and improve existing controls (e.g., further air-sealing of the entrance wall) to control floor condensation. Future instances of potential secondary effects, if encountered, will be addressed in a similar, collaborative way.

2.1 Mold Assessment

In October 2016, TRW completed a focused assessment of mold growth in the entrance building and Area 2 of the cavern. The assessment was performed October 19, 2016, by a Council-Certified Indoor Environmental Consultant. The assessment included a walk-through of the areas of the cave and entrance building where mold has been previously identified. An MCE representative accompanied the mold expert to help identify areas where mold has been observed, and explain actions previously undertaken to address mold growth. The assessment included only visual observations, such as general types of mold present, nature of substrate, and conditions such as apparent moisture or restricted airflow that may contribute to mold growth. The assessment was limited to readily accessible areas and did not include intrusive cavities. Field observations and interpretations were reported in a technical memorandum, submitted to USEPA and MDNR on January 30, 2017.

2.2 Preliminary Assessment and Sensitive Feature Inventory

TRW performed a preliminary assessment March 28 and 29, 2017 to document cave conditions as a baseline for comparison against future observations. The assessment generated an inventory of sensitive cave features and other areas of potential concern in the cave. These areas included:

- Locations where condensation on flooring may cause slip hazards
- Areas where excess moisture may cause deterioration of a constructed cave feature
- Areas where fog is present or has been previously observed by cave personnel
- Areas where mold or other biota may be growing, if not previously noted during mold assessment
- Locations of "living" speleothems, where continuous or seasonal drip-water is interpreted to continue calcite deposition
- Naturally replenished drip-water pools
- Areas with visibly wet cave walls.

During the assessment, representatives of TRW and MCE toured the cave to identify and discuss features. The assessment was led by a senior scientist with Arcadis. Representatives of the cavern included a karst expert with Ozark Underground Laboratory, and a geologist from Geotechnology, Inc. Cavern staff also participated in the portions of the assessment. After identification of features of interest, Arcadis documented the following information:

1. The feature location, shown on a map or via sketch and described in sufficient detail so that the feature may be found again later with certainty
2. A succinct description of the type of feature and current condition
3. One or more photographs of the feature with date/time stamp, scale, and added lighting (as needed)
4. Any comments provided by MCE on history of the feature or noted condition, including when any condition is believed to have first occurred

At representative locations where sufficient water was present, conductivity was measured in drip-water and standing pools. Measurement locations and water collection techniques were recorded so that measurements could be repeated in future events. Results of the preliminary inventory were submitted as an attachment to the Monthly Project Report—May 2017 Oak Grove Village Well Superfund Site, dated June 15, 2017.

2.3 Observation and Activity Tracking

MCE has been provided a form (Attachment 1) to document relevant activities or observations made in the course of day-to-day operations of the cavern. Relevant observations and activities may include the following:

- A potential secondary effect observed in a new location
- A changed condition of a previously identified potential secondary effect

- Cleaning or repairs conducted to remedy undesirable cave conditions (e.g., removing mold).

Note that these records will be kept in addition to air control operations logs, on which MCE will record openings of the airlock or windows, use of the entrance wall fan, or adjustments to the Wine Room vents. MCE will provide copies of the tracking form to TRW during routine sampling events.

If an observation is noted that may represent a new potential secondary effect, TRW will visit and document the noted location during the next planned TCE air monitoring event. An observation record will be completed, consistent with the preliminary assessment approach, including photographs.

If a specific feature or condition has been identified by MCE as a heightened concern, TRW will make note of changes to the feature during scheduled TCE air monitoring, as needed to understand variability. TRW will work with MCE, on a case by case basis, to identify areas where more frequent observations are needed. If appropriate, MCE will be requested to log conditions, between TCE air monitoring events.

2.4 Routine Monitoring

Routine monitoring will entail a combination of scheduled data collection, observational checkups, and continuous monitoring coordinated with the TCE air monitoring program.

2.4.1 Evaporation Rate

Evaporation rate will be measured at eight locations (Figure 2) selected to be representative of differing areas of the cavern, focusing particularly on areas of sensitive speleothems. Evaporation will be measured using evaporation pans placed at ground level. Pans will be 8- to 12-inch-diameter, square-sided pans of known surface area placed beneath drip covers.

At deployment, the pan will be filled to an etched fill line within 1-inch of the pan rim. The average evaporation rate between monitoring events will be determined by recording the changed volume of water in the pan, measured as the volume of water required to refill the pan to the fill line. A graduated water dispensing device (e.g., pipette) will be used to replenish the pans and record the volume. Evaporation pans will be checked during each regularly-scheduled TCE air monitoring event and refilled at least every 2 months. If evaporation rates are observed to be faster than anticipated (e.g., such that pan levels may fall greater than 1 inch in 2 months), more frequent monitoring may be undertaken.

2.4.2 Drip Water Conductivity

Measurements of the conductivity of drip water or standing pools will be repeated every 2 months at locations identified in the preliminary assessment. These locations will be selected based on feasibility of measurement (e.g., sufficient volume), access to walking paths, and distribution throughout areas of interest in the cavern. Drip water catch vessels may be deployed as much as 1 day in advance of monitoring if needed for measurement volume. Measurements will be recorded using a calibrated conductivity meter.

2.4.3 Temperature and Relative Humidity

Temperature and relative humidity will be recorded with data-logging sensors deployed in nine locations (Figure 2):

- Outdoors, at a shaded location near the entrance building
- Amphitheater, in the air inlet in the back of the room
- Five locations in Area 2: Ballroom, Honeymoon Room, Echo Room, Theater, Wine Room
- Two locations in Area 3: Loot Rock, Jungle Room.

Measurements will be recorded every 15 minutes using a HOBO U23 Pro v2 Temperature/Relative Humidity data logger or similar. Note that this monitoring program is a continuation and small expansion of the temperature and relative humidity monitoring currently being conducted as part of the TCE air monitoring program. Data will be downloaded in conjunction with each TCE air monitoring event.

2.4.4 Observation Check-ups

After the preliminary assessment, scheduled observation checkups will be completed approximately every 4 months (contemporaneously with a regularly-scheduled TCE air monitoring event) to track conditions of specific sensitive cave features or previously identified potential secondary effects. Note that these checkups are in addition to observations made by MCE, and the routine monitoring completed by TRW, described above. Checkups will not include all locations observed in the preliminary assessment but will focus on areas of recognized concern and a representative selection of locations in each area of the cavern. Checkups will be completed by reviewing and refreshing the prior assessment logs, noting any changes and taking photographs to document current conditions. MCE will be invited to accompany TRW during the checkups to identify or draw attention to any conditions or areas of concern observed in the course of cave operations.

As of this submittal date, observation check-ups have been performed in July 2017, September 2017, and January 2018. Results of each check-up were provided in subsequent Progress Reports.

3 COMMUNICATIONS AND REPORTING

Project communications will include frequent, informal data and observation sharing and periodic summary reports. Informal data sharing will include the following:

- Measured temperature and relative humidity data are included in Progress Reports for the site.
- MCE will be notified of any significant new evidence of potential secondary effects, if identified by TRW during routine monitoring.

Data summary reports were prepared after the preliminary assessment, and again after each observation checkup (every 4 months) and will continue. The summary reports include observation records, photo logs, tracking form, data tables, and a description of any actions taken in an effort to mitigate a potential secondary effect. The preliminary summary report also included an analysis of the mold conditions by a mold specialist. Reports and interim data will be provided to MCE, USEPA and MDNR.

4 SCHEDULE

The secondary effects monitoring plan was initiated in March 2017. Secondary effects will be monitored for a five-year period (March 2017-2022). TRW will continue to implement the plan as described for a total of 3 years (i.e., through March 2020). For an additional two years, TRW will perform continuous climate monitoring along with quarterly evaporation pan measurements and drip-water conductivity measurements. In these additional two years, TRW will perform sensitive features inventory checkups once-per-year. The need for further evaluation of possible secondary effects on the cave system will be reevaluated after five years.

FIGURES

LA JOLLA SPRING CAVE COMPLEX
STANTON, MISSOURI

CAVERN LAYOUT

ARCADIS Design & Consultancy for natural and built assets

FIGURE 1

CITY:(LENEXA) DIV/GROUP:(ENV) DB:(COBB) LD:() PIC:() PM:(SHONFELT) TM:(OVERHOLTZER)
G:\ SAVED: 05MAY2015

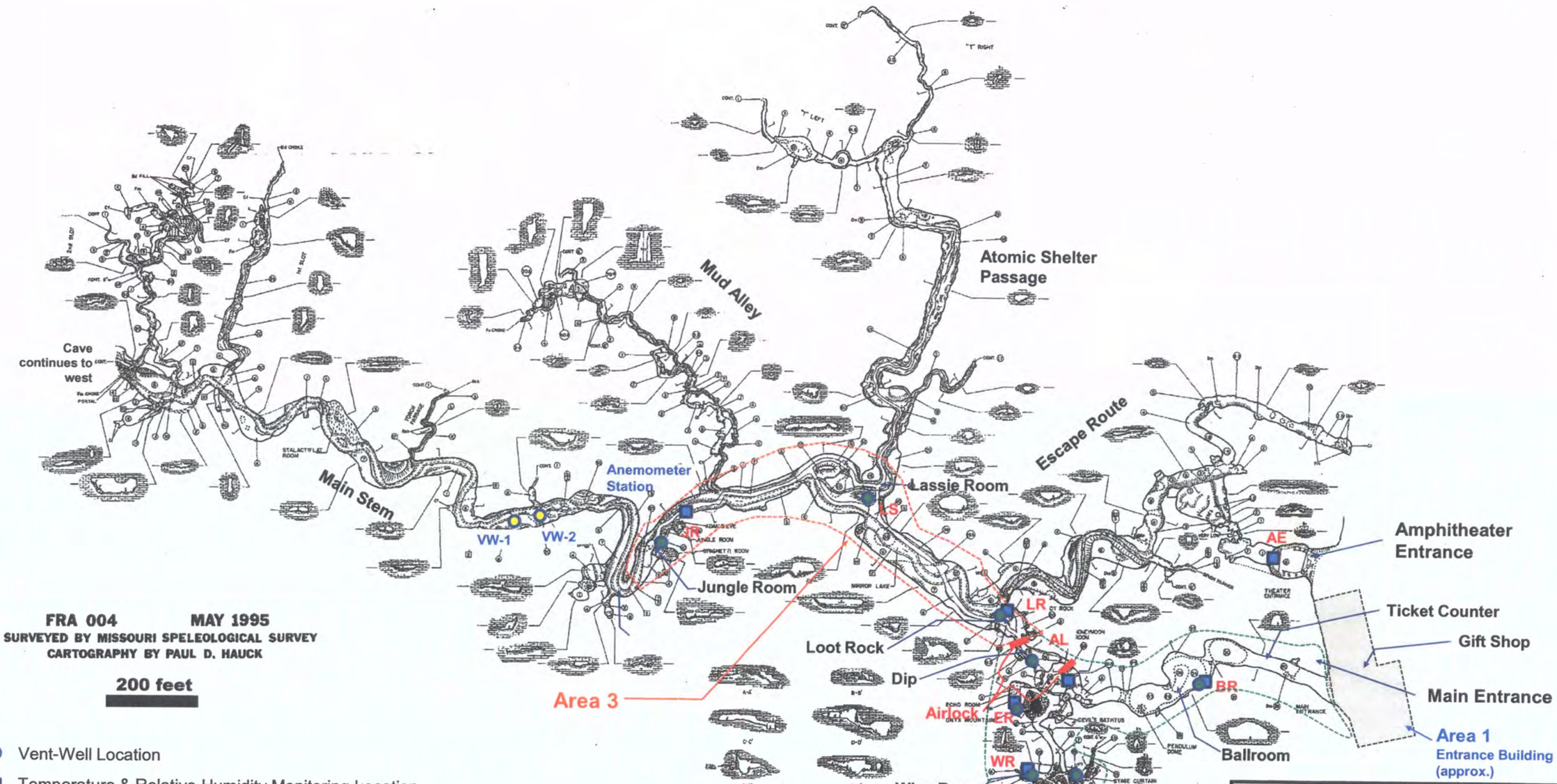

Location Key:
AE: Amphitheater Entrance, AL: Airlock, BR: Ballroom, ER: Echo Room, HR: Honeymoon Room, JR: Jungle Room, LA: Lassie Room, LR: Loot Rock, LS: Lassie Room, TR: Theater Room, WR: Wine Room

LA JOLLA SPRING CAVE COMPLEX
STANTON, MISSOURI

SECONDARY EFFECTS CLIMATE MONITORING LOCATIONS

ARCADIS Design & Consultancy for natural and built assets

FIGURE 2

CITY:(LENEXA) DIV/GROUP:(ENV) DB:(COBB) LD:() PIC:() PM:(SHONFELT) TM:(OVERHOLTZER) G:\ SAVED: 05/MAY/2015

APPENDIX A

Secondary Effects Tracking Field Form

Secondary Effects Tracking Log

ARCADIS Design & Consultancy for natural and built assets

La Jolla Spring Cave Complex
Stanton, Missouri

Observation or Activity		
Date:	Reported by:	☐ Photo(s) Taken
Location:		
Description of Observation or Activity:		
Comments:		

Observation or Activity		
Date:	Reported by:	☐ Photo(s) Taken
Location:		
Description of Observation or Activity:		
Comments:		

Observation or Activity		
Date:	Reported by:	☐ Photo(s) Taken
Location:		
Description of Observation or Activity:		
Comments:		

Instructions

> Please describe observations and activities in detail.
> Observations should include new secondary effects, such as areas of mold, fog, or condensation.
> Activity should include work completed to address a secondary effect such as mold removal, or mopping excess condensation. Please note materials and products used, such as cleaning supplies.
> Location should include room in cave as well as description of where in that room. Include sketch, if needed.
> Please send pictures and completed form to Arcadis via electronic mail (john.shonfelt@arcadis.com)

APPENDIX G

Indoor Air Sampling Procedures

ARCADIS Design & Consultancy for natural and built assets

APPENDIX G

INDOOR AIR OR AMBIENT AIR SAMPLING AND ANALYSIS USING USEPA METHOD TO-15

SOP # 765199

Rev. #: 2

Rev. Date: July 7, 2010

Project-Specific Modifications: June 23, 2016

Approval Signatures

Prepared by: Date: _____ Date: April 26, 2016
Michael Cobb

Approved: _____ by: Date: April 26, 2016
Mitch Wacksman

I. Scope and Application

This standard operating procedure (SOP) describes the procedures to collect indoor air or ambient air samples for the analysis of volatile organic compounds (VOCs) using United States Environmental Protection Agency (USEPA) Method TO-15 (TO-15). The TO-15 method uses a 6-liter SUMMA® passivated stainless steel canister. An evacuated SUMMA® canister (<28 inches of mercury [Hg]) will provide a recoverable whole-gas sample of approximately 5 liters when allowed to fill to a vacuum of 5 inches of Hg. The whole-air sample is then analyzed for VOCs using a quadrupole or ion-trap gas chromatograph/mass spectrometer (GS/MS) system to provide compound detection limits of 0.5 parts per billion volume (ppbv).

The following sections list the necessary equipment and provide detailed instructions for placing the sampling device and collecting indoor air samples for VOC analysis.

II. Personnel Qualifications

ARCADIS field sampling personnel will have current health and safety training, including 40-hour HAZWOPER training, site supervisor training, site-specific training, first aid, and cardiopulmonary resuscitation (CPR), as needed. ARCADIS field sampling personnel will be well versed in the relevant SOPs and possess the required skills and experience necessary to successfully complete the desired field work. ARCADIS personnel responsible for leading indoor air sample collection activities must have previous indoor air sampling experience.

III. Health and Safety Considerations

All sampling personnel should review the appropriate health and safety plan (HASP) and job safety analysis (JSA) prior to beginning work to be aware of all potential hazards associated with the job site and the specific task.

IV. Equipment List

The equipment required for indoor air sample collection is presented below:

- 6-liter, stainless steel SUMMA® canisters (order at least one extra, if feasible);
- Flow controllers with in-line particulate filters and vacuum gauges (flow controllers are pre-calibrated by the laboratory to a specified sample duration [e.g., 8-hour]). Confirm with lab that flow controller is equipped with an in-line particulate filter and pressure gauge (order an extra set for each extra SUMMA® canister, if feasible);
- Appropriate-sized open-end wrenches (typically 9/16-inch);
- Chain-of-custody (COC) form;

- Sample collection log (attached);
- Camera if photography is permitted at sampling locations;
- Box, chair, tripod, or similar to hold canister above the ground surface; and
- Teflon sample tubing may be used to sample abnormal situations (i.e., sumps, where canisters must be hidden, etc.). In these situations ¼-inch Swagelok fittings or other methods may be appropriate to affix tubing to canister. Staff should check this before heading out into field.

V. Cautions

Care must be taken to minimize the potential for introducing interferences during the sampling event. As such, keep ambient air canisters away from heavy pedestrian traffic areas (e.g., main entranceways, walkways) if possible. Sampling personnel should not handle hazardous substances (such as gasoline), permanent marking pens (sharpies), wear/apply fragrances, or smoke cigarettes before and/or during the sampling event.

Ensure that the flow controller is pre-calibrated to the proper sample collection duration (confirm with laboratory). Sample integrity can be compromised if sample collection is extended to the point that the canister reaches atmospheric pressure. Sample integrity is maintained if sample collection is terminated prior to the target duration and a measurable vacuum (e.g., -5–inches Hg) remains in the canister when sample collection is terminated.

VI. Procedure

Preparation of SUMMA®-Type Canister and Collection of Sample

1. Record the following information on the sampling form (use a hand-held weather meter, contact the local airport or other suitable information source [e.g., weatherunderground.com] to obtain the following information):

- ambient temperature;
- barometric pressure;
- wind speed; and
- relative humidity.

2. Choose the sample location in accordance with the sampling plan. If a breathing zone sample is required, place the canister on a ladder, tripod, box, or other similar stand to locate the canister orifice 3 to 5 feet above ground or floor surface. Canister may be affixed to wall/ceiling support with nylon rope or placed on a stable surface. In general, areas near windows, doors, air supply vents, and/or other potential sources of "drafts" shall be avoided.
3. Record SUMMA® canister serial number and flow controller number on the sampling log and chain of custody (COC) form. Assign sample identification on canister ID tag, and record on the sample collection log (Attachment B), and COC form.
4. Remove the brass dust cap from the SUMMA® canister. Attach the flow controller and vacuum gauge to the SUMMA® canister with the appropriate-sized wrench. Tighten with fingers first, then gently with the wrench. Use caution not to over tighten fittings.
5. Open the SUMMA® canister valve to initiate sample collection. Record the date and local time (24-hour basis) of valve opening on the sample collection log, and COC form. Collection of duplicate samples will include collecting two samples side by side at the same time. The use of T-fittings and Teflon® lined tubing may be used to connect the duplicate and parent sample ports such that both sample canisters are collecting ambient air from the same sample port.
6. Record the initial vacuum pressure in the SUMMA® canister on the sample log and COC form. If the initial vacuum pressure registers less than -25 inches of Hg, then the SUMMA® canister is not appropriate for use and another canister should be used.
7. If feasible, check the SUMMA canister approximately half way through the sample duration and note progress on sample logs.

Termination of Sample Collection

1. Arrive at the SUMMA® canister location at least 1-2 hours prior to the end of the sampling interval (e.g., 8-hour).
2. Stop collecting the sample when the canister vacuum reaches approximately 5 inches of Hg (leaving some vacuum in the canister provides a way to verify if the canister leaks before it reaches the laboratory) or when the desired sample time has elapsed, whichever comes first.
3. Record the final vacuum pressure. Stop collecting the sample by closing the SUMMA® canister valve. Record the date, local time (24-hour basis) of valve closing on the sample collection log, and COC form.

4. Remove the flow controller from the SUMMA® canister, re-install brass cap on canister fitting, and tighten with wrench.
5. Package the canister and flow controller in the shipping container supplied by the laboratory for return shipment to the laboratory. The SUMMA® canister does not require preservation with ice or refrigeration during shipment.
6. Complete the appropriate forms and sample labels as directed by the laboratory (e.g., affix card with string).
7. Complete COC form and place requisite copies in shipping container. Close shipping container and affix custody seal to container closure. Transmit canisters to laboratory (e.g., Federal Express, UPS, courier) for analysis.

VII. Waste Management

No specific waste management procedures are required.

VIII. Data Recording and Management

Notes taken during the initial building survey will be recorded on the sample log, with notations of project name, sample date, sample time, and sample location (e.g., description and GPS coordinates if available) sample start and finish times, canister serial number, flow controller number, initial vacuum reading, and final vacuum reading. Sample logs and COC records will be transmitted to the Task Manager or Project Manager

IX. Quality Assurance

Collect quality assurance samples as required by project-specific work plan or Quality Assurance Project Plan (QAPP).

ARCADIS Design & Consultancy for natural and built assets		Indoor Air/Ambient Air Sample Collection Log	
		Sample ID:	
Client:		Outdoor/Indoor:	
Project:		Sample Intake Height:	
Location:		Tubing Information:	
Project #:		Miscellaneous Equipment:	
Samplers:		Time On/Off:	
Sample Point Location:		Subcontractor:	

Instrument Readings:

Date	Time	Canister Vacuum (a) (inches of Hg)	Temperature (°F)	Relative Humidity (%)	Air Speed (mph)	Barometric Pressure (inches of Hg)	PID (ppb)

(a) Record canister information at a minimum at the beginning and end of sampling

SUMMA Canister Information:

Size (circle one):	1 L 6 L
Canister ID:	
Flow Controller ID:	
Notes:	

General Observations/Notes:

ARCADIS Design & Consultancy for natural and built assets

Arcadis U S , Inc.

Rosehill Office Park 1

8725 Rosehill

Suite 350

Lenexa, Kansas 66215

Tel 913 492 0900

Fax 913 492 0902

www.arcadis.com