Table of Contents

List of Figures ..... Page iii

List of Tables ..... Page iii

List of Appendices ..... Page iii

List of Referenced Drawings ..... Page iii

Acronym Table ..... Page iv

J-1 Introduction ..... Page 1

J-2 Hazardous Waste Management Units to be Closed ..... Page 2

J-3 Closure Performance Standard ..... Page 3
J-3a Establishment of Cleanup Standards ..... Page 4

J-4 Partial Closure and Final Closure Activities ..... Page 9
J-4a Disposal or Decontamination of Equipment, Structures and Soils ..... Page 12
J-4a(1) Soils ..... Page 13
J-4a(2) Hazardous Waste Management Units (HWMUs) Page 18
J-4a(2)(a) HWMUs with no internal or complicated external parts . Page 18
J-4a(2)(b) HWMUs with internal or complicated external parts . Page 20
J-4a(3) Closure of Miscellaneous Handling Equipment ..... Page 22
J-4a(3)(a) Decontamination of small miscellaneous handling equipment ..... Page 24
J-4a(3)(b) Decontamination of large miscellaneous handling equipment with no internal or complicated external parts . Page 25
J-4a(3)(c) Decontamination of large miscellaneous handling equipment with internal or complicated external parts . Page 26
J-4b Hazardous Waste Handling Procedures ..... Page 28

RCRA
404799

J-5 Maximum Extent of Operations ..... Page 29

J-6 Maximum Waste Inventory ..... Page 30

J-7 Schedule for Final Closure ..... Page 31
J-7a Expected Year of Final Closure ..... Page 31

J-8 Closure Plan Amendment ..... Page 33

J-9 Individual Unit Closures ..... Page 35
J-9a Container Management Unit (CMU) Closure ..... Page 35
J-9a(1) Process and Unit Description ..... Page 36
J-9a(2) Unit Closure Procedures ..... Page 38
J-9a(3) Unit Closure Schedule ..... Page 42
J-9b Tank System Closure ..... Page 43
J-9b(1) Process and Unit Description ..... Page 43
J-9b(2) Unit Closure Procedures ..... Page 45
J-9b(3) Unit Closure Schedule ..... Page 51
J-9c Miscellaneous Unit Closure ..... Page 52
J-9c(1) Process and Unit Description ..... Page 52
J-9c(2) Unit Closure Procedures ..... Page 56
J-9c(3) Unit Closure Schedule ..... Page 61

J-10 Financial Requirements ..... Page 62

Endnote ..... Page 63

List of Figures

Figure J.1, Material Containment Areas
Figure J.2, Tank Locations
Figure J.3, Miscellaneous Unit Locations

List of Tables

Table J.1, Maximum Extent of Operations - ~~Safety-Kleen (Wichita), Inc.~~Clean Harbors Kansas, LLC - Hazardous Waste Management Units
Table J.2, Decontamination Rinsate Analysis
Table J.3, Closure Activity Schedule - Final Facility Closure
Table J.4, Closure Activity Schedule - Container Management Unit (CMU)
Table J.5, Closure Activity Schedule - Tanks and Tank Systems
Table J.6, Closure Activity Schedule - Miscellaneous Units
Table J.7, Schedule for Partial Closure - Tanks V-29, V-30, V-31, V-32

Note: Tables are presented in Appendix J-A

List of Appendices

Appendix J-A, Tables
Appendix J-B, Closure Cost Estimate
Appendix J-C, Compliance Schedule, Closure of V-29, V-30, V-31, V-32

List of Referenced Drawings

Drawings Located in Section Y, Drawings

Drawing 50-01-10-002, Material Containment Areas
Drawing 50-01-03-001, Tank Locations
Drawing 50-57-10-001, Miscellaneous Unit Locations

Acronym Table

~~Safety-Kleen (Wichita), Inc.~~Clean Harbors Kansas, LLC (SKW)
L
Treatment, Storage, or Disposal Facilities (TSDFs)
Title 40 of the Code of Federal Regulations (40 CFR)
Hazardous Waste Management Units (HWMUs)
National Priorities List (NPL)
Potentially Responsible Party (PRP)
Kansas Department of Health and Environment (KDHE)
Toxic Characteristic Leaching Procedure (TCLP)
Container Management Unit (CMU)
Toxic Characteristic Leaching Procedure (TCLP)

J-1 Introduction

This plan describes the activities to be performed at ~~Safety-Kleen (Wichita), Inc.~~Clean Harbors Kansas, LLC at the time of facility closure; it addresses both partial unit closures and final facility closure. This plan is contained in the RCRA/HSWA Part B permit application as Section J. When the permit is issued pursuant to this application, this plan will supersede the existing plans covering current interim status operations.

~~Safety-Kleen (Wichita), Inc. is a wholly owned subsidiary of Safety-Kleen services (US).~~ The facility stores, treats, and recovers for recycling hazardous and nonhazardous wastes. LESW blends BTU containing materials for beneficial use and energy recovery as cement kiln fuel and recovers solvents for further management. ~~Safety-Kleen (Wichita), Inc.~~Clean Harbors Kansas, LLC also stores, processes, and/or manages waste solvents, sludges, solids, and water for subsequent shipment to other permitted Treatment, Storage, or Disposal Facilities (TSDFs) for distillation, beneficial reuse, further treatment or disposal. ~~Safety-Kleen (Wichita), Inc.~~Clean Harbors Kansas, LLC also stores waste solvent, hydrocarbons, paint-related waste streams, solids, corrosive waste streams, and water-based waste streams. Storage and treatment occurs in both containers and tanks. (For

a more complete description of activities at ~~Safety-Kleen (Wichita), Inc.,~~Clean Harbors Kansas, LLC, see Section B, Facility Description.) The facility operates under EPA I.D. No. KSD007246846.

The ~~Safety-Kleen (Wichita), Inc.~~Clean Harbors Kansas, LLC facility does not include disposal units. Also, all tank systems are equipped with secondary containment meeting the requirements of Title 40 of the Code of Federal Regulations (40 CFR) 264.193 (b) through (f). Therefore, the facility is subject to neither the post-closure care requirements of 40 CFR 264.116 through 264.120, nor the contingent post-closure plan requirements of 40 CFR 264.197(c).

J-2 Hazardous Waste Management Units to be Closed

The ~~Safety-Kleen (Wichita), Inc.~~Clean Harbors Kansas, LLC facility's existing hazardous waste management units are summarized in Table J.1, Maximum Extent of Operations - ~~Safety-Kleen (Wichita), Inc.~~Clean Harbors Kansas, LLC - Hazardous Waste Management Units, presented in Appendix J-A, Tables. Specific descriptions of container management units, tank systems, and miscellaneous units are located in Sections D (Container Management), E (Tank Management), and M (Miscellaneous Units),

respectively.

J-3 Closure Performance Standard

~~Safety-Kleen (Wichita), Inc.~~Clean Harbors Kansas, LLC will close each hazardous waste management unit and/or the entire facility in a manner that minimizes the need for further maintenance, and controls, minimizes, or eliminates (to the extent necessary to protect human health and the environment) post-closure escape of hazardous waste, hazardous constituents, contaminated run-off, or hazardous waste decomposition products to the ground or surface waters or to the atmosphere.

~~Safety-Kleen (Wichita), Inc.~~Clean Harbors Kansas, LLC will meet this performance standard by removing all hazardous wastes and hazardous waste constituents to acceptable levels (see Section J-4a). All containers, tanks, miscellaneous units, piping, and other ancillary parts to the systems will be closed in one of the following ways:

1. They will be dismantled and disposed of as hazardous waste at a RCRA/HSWA permitted off-site disposal facility.

2. They will be decontaminated in accordance with the procedures discussed in Section J-4a and disposed of at a solid waste landfill.

3. They will be decontaminated sufficiently to be salvaged for future use.

4. They will be transferred for use at another RCRA facility.

All permanent structures (e.g., concrete containment systems) will be closed in one of the following ways.

1. They will be dismantled and disposed of as hazardous waste at a RCRA/HSWA permitted off-site disposal facility.

2. They will be decontaminated in accordance with the procedures discussed in Section J-4a and disposed of at a solid waste landfill.

3. They will be decontaminated in accordance with the procedures discussed in Section J-4a and maintained in place for future use.

All analyses performed to verify that closure performance standards are met shall be performed at a laboratory certified by the state of Kansas for the specific analytical procedures used.

J-3a Establishment of Cleanup Standards

~~Safety-Kleen (Wichita), Inc.~~Clean Harbors Kansas, LLC will close the subject Hazardous Waste Management Units (HWMUs) by removal of the waste so that there will not be any need for post-closure monitoring and maintenance of the units.

Since all units at ~~Safety-Kleen (Wichita), Inc.~~Clean Harbors Kansas, LLC have secondary containment, any leaks, spills, drips, etc. will have been contained, removed, and cleaned up in accordance with the operating conditions of this permit. Therefore, the surrounding soils and/or groundwater should not have been contaminated by regulated units during facility operations under this permit application.

The property on which the ~~Safety-Kleen (Wichita), Inc.~~Clean Harbors Kansas, LLC facility is located is included within the boundaries of the 29th and Mead Comprehensive Environmental Response, Compensation, and Liability Act or "Superfund" Site in Wichita, Kansas. The 29th and Mead Superfund Site is listed on the National Priorities List (NPL). Reid Supply Company has been named a Potentially Responsible Party (PRP) in the 29th and Mead Superfund Site. In 1986, Conservation Services, Inc. purchased certain assets, including the permit (operating under EPA I.D. #KSD007246846), from Reid Supply Co., Inc. Subsequently, Hydrocarbon Recyclers, Inc. of Wichita acquired the capital stock of Conservation Services, Inc. in 1987. The Reid Supply Company property functioned as a storage, recycling, and collection point for hazardous waste material and as a bulk chemical repackaging and distribution center since the 1970s.[1]

The 29th and Mead Superfund Site, located in north Wichita, Kansas, is bounded by 37th Street on the north, I-135 on the east, 17th Street on the south, and Broadway Street on the west. Located in a heavy industrial area, the Site has evolved over a 95 year time span, approximately. Current industry includes, but is not limited to, chemical supply companies, grain elevators, railroad facilities, metal fabricating companies, foundries, refineries, meat processing companies, recyclers/salvage facilities, roofing companies, concrete companies, food processing companies, and gasoline retailers.[1]

Past investigations, including one performed by Groundwater Technology, Inc.[1], have indicated the presence of soil and groundwater contamination. The investigation and remediation plan for the 29th and Mead Superfund Site is in preparation by U.S. EPA Region VII contractors. Due to this investigation into potential contamination of the area, the ~~Safety-Kleen (Wichita), Inc.~~Clean Harbors Kansas, LLC facility currently does not plan to conduct independent soil or groundwater studies during closure. At final closure, LESW will use the Superfund site cleanup levels as the target levels for closure performance

standard for soils and groundwater (as appropriate) at the site.

In the event that the Superfund cleanup levels have not been determined at the time of final facility closure, a health risk assessment will be performed and used to set the target closure levels for contaminants in soils and groundwater at the site. The health risk assessment and the recommended target levels will be provided to the appropriate regulatory agency for review and approval prior to implementation. During partial closure, soils will be removed or decontaminated if contaminant levels exceed background levels, as determined using the procedures in Section J-4. Subsequent removal of soils from the same area may occur at final closure, depending upon the target levels defined as discussed in the preceding paragraph.

~~Safety-Kleen (Wichita), Inc.~~Clean Harbors Kansas, LLC may amend this closure plan in the future in accordance with 40 CFR 270.42.

Because the scope and extent of future site remediation is unknown, this closure plan will address only potential contamination which resulted from hazardous waste management at ~~Safety-Kleen (Wichita), Inc.~~Clean Harbors Kansas, LLC Consequently, all areas where evidence of visible contamination exists and areas beneath secondary containment will be evaluated and closed in accordance with J-4a of this closure plan.

During facility operations under this permit application, hazardous waste management areas are covered and have secondary containment which includes diking. These controls minimize precipitation run-on and run-off and will subsequently be maintained during closure. These structures will not be removed until after all associated hazardous waste management units are decontaminated; or, if demolition is required, other practical methods will be implemented to control run-on and run-off.

Because the ~~Safety-Kleen (Wichita), Inc.~~Clean Harbors Kansas, LLC facility does not contain waste piles or surface impoundments, and the facility is not a disposal facility, other

activities such as groundwater monitoring and leachate collection are not applicable as part of closure.

J-4 Partial Closure and Final Closure Activities

Partial facility closure (i.e., closure of individual hazardous waste management units) may be necessary during the active life of the facility. If partial closure is necessary, the individual hazardous waste management unit would be closed in accordance with Section J-9 of this closure plan. Currently, however, LESW plans to close all existing hazardous waste management units during the final facility closure. ~~Safety-Kleen (Wichita),~~Clean Harbors Kansas, ~~Inc.~~LLC will close the facility in accordance with the following procedures.

1. ~~Safety-Kleen (Wichita), Inc.~~Clean Harbors Kansas, LLC will notify the Kansas Department of Health and Environment (KDHE) or the United States Environmental Protection Agency (USEPA), Region 7, Administrator at least 45 days before ~~Safety-~~Clean ~~Kleen (Wichita), Inc.~~Harbors Kansas, LLC intends to begin final closure (within 30 days after receiving the known final volume of hazardous waste into a hazardous waste management unit).

2. If modifications to this closure plan are desired and have not been previously approved in accordance with 40 CFR 270.42 and 264.112, the modified portions of the plan will

not be implemented until approval by KDHE or other authorized agencies has been received.

3. Within 90 days after receiving the final volume of hazardous wastes at a hazardous waste management unit or the facility, LESW will either treat or remove from the unit or facility all hazardous wastes in accordance with this closure plan, unless an extension has been requested and approved in accordance with 40 CFR 264.113(a).

4. ~~Safety-Kleen (Wichita), Inc.~~Clean Harbors Kansas, LLC will complete final closure activities within 180 days after receiving either the final volume of hazardous wastes or final closure plan approval from the agency (whichever is later), unless an extension has been requested and approved in accordance with 40 CFR 264.113(b).

5. ~~Safety-Kleen (Wichita), Inc.~~Clean Harbors Kansas, LLC will close the facility in accordance with the schedule discussed in Section J-7 and outlined in Table J.3, Closure Activity Schedule - Final Facility Closure, of this closure plan.

6. The container management units will be closed in accordance with Section J-9a of this closure plan. The tank systems will be closed in accordance with Section J-9b of this plan. All miscellaneous units will be closed in accordance with Section J-9c of this plan.

7. All contaminated equipment and structures will be either properly disposed of as hazardous waste or decontaminated in accordance with Section J-4a of this closure plan. After decontamination, equipment (such as hand tools, forklifts, and conveyers) and structures may be salvaged for future use.

8. ~~Safety-Kleen (Wichita), Inc.~~Clean Harbors Kansas, LLC will visually inspect the surface soils at the facility. In accordance with Section J-4a of this closure plan, any visible evidence of contamination will be evaluated for hazardous constituents and (if contamination is present) subsequently removed for proper disposal. The target levels for soil contaminants at partial closure will be determined by comparison to local background levels. For final closure, target levels for closure will be determined by comparison to Superfund cleanup levels or, if necessary, levels set using a site-specific health risk assessment.

9. All wastes generated from closure activities will be handled in accordance with Section J-4b of this closure plan.

10. The ~~Safety-Kleen (Wichita), Inc.~~Clean Harbors Kansas, LLC facility does not contain disposal units. All tank systems have secondary containment meeting the requirements of 40

CFR 264.193 (b) through (f). Also, all hazardous

wastes and hazardous waste constituents will be removed from the facility during final closure and all structures will be decontaminated in accordance with this closure plan. Therefore, the facility is subject to neither the post-

closure care requirements of 40 CFR 264.116 through 264.120, nor the contingent post-closure plan requirements of 40 CFR 264.197(c).

11. Within 60 days of final closure completion, ~~Safety-Kleen (Wichita), Inc.~~Clean Harbors Kansas, LLC will submit, either by hand delivery or by registered mail, a certification of closure to KDHE or to the Regional Administrator of the USEPA, Region 7. The certification will be signed by LESW, as the owner/operator of the facility, and by an independent registered professional engineer attesting that the units were closed in accordance with this closure plan.

J-4a Disposal or Decontamination of Equipment, Structures and Soils

During the partial and final closure periods, all contaminated equipment and structures will be either properly disposed of or decontaminated.

J-4a(1) Soils

As discussed in Section J-3a, ~~Safety-Kleen (Wichita), Inc.~~Clean Harbors Kansas, LLC does not currently plan to perform extensive soil or groundwater studies for the purpose of closure because this would duplicate the pending Superfund investigation into potential historical contamination of the site and the surrounding area. The extent of remedial action which will be required at the 29th and Mead Superfund Site has not been determined.

During closure operations, ~~Safety-Kleen (Wichita), Inc.~~Clean Harbors Kansas, LLC will inspect the immediate area around all hazardous waste management units for indications of contamination. Any visible evidence of contamination (e.g., staining, discoloration) will be evaluated for hazardous constituents (performing limited soil sampling and analysis if applicable) and, if contamination is present, the soils will be removed for proper disposal. In addition, the concrete base of the containment system will be inspected for evidence of damage (e.g., cracking, pitting, etc.). If this damage may have resulted in migration of hazardous constituents from the containment system, further investigations will be performed to determine the presence and extent of contamination, if any.

Visibly contaminated soil, either adjacent to or under containment systems of waste management units, will be removed. Excavated soil and debris will be analyzed according to standard laboratory procedures for the presence of hazardous constituents and managed in accordance with applicable regulations. Procedures for sampling and analysis of soil remaining after excavation (if applicable) are listed below.

1. For partial closure involving possible soil contamination, six representative background samples will be taken on-site but away from the visible contamination at depths of 0-18 inches and 18-36 inches at each of three sample points and analyzed using either USEPA SW-846 8260 and/or SW-846 8015, modified, or another equivalent, acceptable method. For all methods of record, deviations from SW-846 methods have either been included in the Waste Analysis Plan (Section C) for agency approval at this time, or will be submitted to the agency for approval prior to use. Background samples will be taken from the same soil type and at the same soil horizon as non-background samples. The facility "background" will be considered the mean plus two standard deviations.

2. All soil analysis procedures will be conducted in accordance with either USEPA method SW-846 numbers 6010, 7471, and/or 8260, modified (as appropriate) or other equivalent procedures. For all methods of record, deviations from SW-846 methods have either been included in the Waste Analysis Plan (Section C) for agency approval at this time, or will be submitted to the agency for approval prior to use.

3. Proper QA/QC procedures will be followed to control the potential loss of VOCs during sampling and transport.

4. All visibly contaminated soil will be removed.

5. All visibly contaminated soil which has been removed will be handled in accordance with Section J-4b of this closure plan.

6. After removal of the contaminated soil, three samples will be taken from inside the area of removed soil at depths of 0-6 inches, 12-18 inches, and 24-30 inches. The samples will be analyzed using USEPA SW-846 8260 and SW-846 8015, modified, and in accordance with Step 2 above.

7. For partial closures, soil will be considered clean for closure when results of sample analyses are either at or below on-site background levels as determined under Item 1 of this list. For final closure, soil will be considered clean for closure when results of sample analyses are at or below health risk based

levels determined in conjunction with the Superfund process, or alternate standards determined using a health risk assessment and approved by KDHE.

8. If the soil does not meet the conditions specified in Step 7 above, soil will be removed to six inches below the lowest contaminated sample detected. If the 24-30 inch soil horizon shows contamination as defined in Step 7, Steps 6 through 8 will be repeated.

During final closure operations, the soil beneath containment systems of all hazardous waste management units will be closed as follows.

1. A visual inspection for evidence of release (i.e., staining or discoloration of soil, or damage to containment system) will be performed to determine selected sites for soil or concrete sampling. At the time of closure, if cracks or gaps which may have resulted in contaminant migration are observed in the hazardous waste management unit, a

sample site will be located on or near the crack location. Concrete corings will not be taken in any unit for which the facility can document that there has not been a major release during the operating period. Concrete corings will be taken in Building I, and in units in which major releases have been documented during the operating period.

2. Collect samples at three depths, 0-6 inches, 12-18 inches, and 24-30 inches, at each sample point and analyze using either USEPA SW-846 8260 and/or SW-846 8015, modified, or another

acceptable method. The samples from each horizon will be composited. For all methods of record, deviations from SW-846 methods have either been included in the Waste Analysis Plan (Section C) for agency approval at this time, or will be submitted to the agency for their approval prior to use.

3. Collect background samples in accordance with Item 1 on page 14 of this Closure Plan, unless background levels have already been determined for the site.

4. Proper QA/QC procedures will be followed to control the potential loss of VOCs during sampling and transport.

5. Soil analysis procedures will be according to either USEPA method SW-846 numbers 6010, 7471 and/or 8260, modified (as appropriate) or other acceptable method. For all methods of record, deviations from SW-846 methods have either been included in the Waste Analysis Plan (Section C) for agency approval at this time, or will be submitted to the agency for their approval prior to use.

6. For partial closures, soil will be considered clean for closure when results of sample analysis are at or below on-site background levels as determined under Item 1 on page 13. For final closure, soil will be considered clean for closure when results of sample analyses are at or below health risk based levels determined in conjunction with the Superfund process, or alternate standards determined using a health risk assessment and approved by KDHE.

7. If large areas of soil contamination, in excess of closure standards, are identified, a project specific assessment and cleanup plan will be prepared and submitted to the KDHE for approval and subsequent implementation. This will be done in accordance with the permit modification procedures of 40 CFR 270.42.

Decontamination procedures for hazardous waste management units (i.e., tank systems, container storage units, and miscellaneous units) are discussed in the following paragraphs. Specific procedures are outlined based on configuration of the equipment. "Exposed surfaces" are external surfaces and those internal surfaces which are readily scraped, sandblasted, brushed, or swept (i.e., accessible to standard techniques for removal of residual materials).

J-4a(2)(a) HWMUs with no internal or complicated external parts

All tank systems, container management units, and miscellaneous units and their associated secondary containment system components and ancillary equipment will be decontaminated as follows (unless the unit has internal and/or complicated external parts exposed to waste).

1. Surfaces will be scraped, sandblasted, brushed, or swept to remove all loose or caked residue. Surfaces will then be triple rinsed. The first wash/rinse will be performed with a high-pressure stream of steam or water with suitable detergents or other cleaning additives. The second

wash/rinse will be performed using clean water with cleaning additives. Accumulated liquids from the two first washes will be collected and handled in accordance with Section J-4b of this closure plan. The third wash/rinse will be performed with clean (potable) water.

2. The equipment will be visually inspected after the triple wash/rinse to assess the presence of visible residue. If necessary, the facility will repeat all, or part, of the above procedures.

3. A representative sample will be taken of the rinse water from the final rinse of each hazardous waste management unit. These samples will be analyzed for total concentrations of all constituents with Maximum Concentration Limits (MCL) defined in 40 CFR 264.94.

4. A unit will be considered decontaminated when the rinsate sample analysis results are lower than the MCLs defined in 40 CFR 264.94, and when no visible residues remain on the unit.

5. If the unit is not decontaminated after performing Steps 1 through 4, the facility will either repeat the above procedures or dismantle the unit for further management and/or disposal at an off-site permitted TSDF as a hazardous waste. Equipment disposed of in a landfill will meet the applicable Land Disposal Restriction (LDR) standards of 40 CFR 268.

J-4a(2)(b) HWMUs with internal or complicated external parts

Any tank systems or miscellaneous units with external or complicated internal parts exposed to wastes (such as the Shredding Unit) will be decontaminated as follows.

1. Exposed surfaces will be scraped, sandblasted, brushed, or swept to remove all loose or caked residue. Surfaces will then be triple rinsed. The first wash/rinse will be performed with a high-pressure stream of steam or water with suitable detergents or other cleaning additives. The second wash/rinse will be performed using clean water with cleaning additives. Accumulated solids and liquids from the two first washes will be handled in accordance with section J.4b of this closure plan. The third wash/rinse will be performed with clean water.

2. The equipment will be visually inspected after the triple wash/rinse to assess the presence of visual residue. If necessary the facility will repeat all, or part, of the above procedures.

3. If visible contamination remains, go to Step 5 below. If no visible contamination remains, the facility will take a representative sample of the rinse water from the final rinse of the hazardous waste management unit. These samples will be analyzed according to the TCLP (40 CFR 261.24 as amended June 29, 1990).

4. A unit will be considered decontaminated when the rinsate sample analysis results are lower than the values/levels listed in Table J.2, and when no visible residues remain on the unit.

5. If, after performing the above rinsing procedures, the equipment can not be decontaminated, the equipment will be transported by a licensed/permitted hauler to an off-site, permitted TSDF for further treatment or disposal. Equipment disposed of in a landfill will meet the applicable Land Disposal Restriction (LDR) standards of 40 CFR 268.

J-4a(3) Closure of Miscellaneous Handling Equipment

A wide variety of equipment on site may be used for hazardous waste management. Equipment which has been in contact with hazardous waste will be decontaminated during closure activities. Equipment which may require decontamination during closure includes (but is not limited to) industrial trucks, drum dollies, handcarts, conveyers, augers, and other material transfer equipment, as well as hand tools such as shovels, brushes, scrapers, etc. During final facility closure, this equipment will be closed in one of the following ways:

- For closure of small equipment (such as hand tools), if visible contamination exists, the equipment will be dismantled and disposed of as hazardous waste at a RCRA/HSWA permitted off-site disposal facility,

- For closure of all equipment (including hand tools), if visible contamination exists, equipment will be decontaminated and disposed of at a solid waste landfill. If evidence of contamination exists after decontamination, the equipment will be transported by a permitted/licensed hauler to a permitted RCRA/HSWA off-site TSDF for further treatment or disposal, or

- For closure of all equipment (including hand tools), if visible contamination exists, equipment will be decontaminated sufficiently to be salvaged for future use and potentially transferred for use at another RCRA facility.

J-4a(3)(a) Decontamination of small miscellaneous handling equipment

All hand tools and equipment without internal or complicated external parts will be decontaminated in accordance with the following procedures.

1. Surfaces will be scraped, sandblasted, brushed, or swept to remove all loose or caked residue. Surfaces will then be rinsed with a high-pressure stream of steam or water, possibly with suitable detergents or other cleaning additives, until either all visible contamination is removed, or until further removal is not feasible. All accumulated solids and liquids will be handled in accordance with section J-4b of this closure plan.

2. The equipment will be visually inspected for evidence of visible contamination.

3. The equipment will be considered decontaminated when no visible evidence of contamination exists.

4. If visible evidence of contamination remains and cannot be removed, the equipment will be disposed of as a hazardous waste.

J-4a(3)(b) Decontamination of large miscellaneous handling equipment with no internal or complicated external parts

All large equipment with no internal or complicated external parts will be decontaminated as follows.

1. Surfaces will be scraped, sandblasted, brushed, or swept to remove all loose or caked residue. Surfaces will then be triple rinsed. The first wash/rinse will be performed with a high-pressure stream of steam or water with suitable detergents or other cleaning additives. The second wash/rinse will be performed using clean water with cleaning additives. Accumulated solids and liquids from the two first washes will be handled in accordance with section J.4b of this closure plan. The third wash/rinse will be performed with clean water.

2. The equipment will be visually inspected after the triple wash/rinse to assess the presence of visual residue. If necessary, the facility will repeat all, or part, of the above procedures.

3. A representative sample will be taken of the rinse water from the final rinse of each hazardous waste management unit. These samples will be analyzed for total concentrations of MCL constituents.

4. Except in cases where the Hazardous Waste Debris Rule applies, the equipment will be considered decontaminated when the rinsate sample analysis results are lower than the MCLs defined in 40 CFR 264.94, and when no visible residues remain on the unit.

5. If the unit is not decontaminated after performing Steps 1 through 4, the facility will either repeat the above procedures or dismantle the unit and transport it by a licensed/permitted hauler to an off-site, permitted TSDF for further treatment or disposal.

J-4a(3)(c) **Decontamination of large miscellaneous handling equipment with internal or complicated external parts**

All large equipment with internal and/or complicated external parts that contact waste will be decontaminated in accordance with the following procedures.

1. Surfaces will be scraped, sandblasted, brushed, or swept to remove all loose or caked residue. Surfaces will then be triple rinsed. The first wash/rinse will be performed with a high-pressure stream of steam or water with suitable detergents or other cleaning additives. The second wash/rinse will be performed using clean water with cleaning additives. Accumulated solids and liquids from the two first washes will be handled in accordance with section J.4b of this closure plan. The third wash/rinse will be performed with clean water.

2. The equipment will be visually inspected after the triple wash/rinse to assess the presence of visual residue. If necessary the facility will repeat all, or part, of the above procedures.

3. If visible contamination remains, go to Step 5 below. If no visible contamination remains, the facility will take a representative sample of the rinse water from the final rinse of the hazardous waste management unit. These samples will be analyzed for total concentrations of MCL constituents.

4. A unit will be considered decontaminated when the rinsate sample analysis results are lower than the MCLs defined in 40 CFR 264.94, and when no visible residues remain on the unit.

5. If after performing the above rinsing procedures, the equipment can not be decontaminated, the equipment will be transported by a licensed/permitted hauler to an off-site, permitted TSDF for further treatment or disposal. Equipment disposed of in a landfill will meet the applicable Land Disposal Restriction (LDR) standards of 40 CFR 268.

J-4b Hazardous Waste Handling Procedures

All contaminated solids, liquids, sludges, soils, and debris generated by the closure process will be managed in accordance with applicable regulations as site generated solid waste (i.e., ~~Safety-Kleen (Wichita), Inc.~~Clean Harbors Kansas, LLC is the generator). Generated wastes meeting the definition of "hazardous waste" under 40 CFR 261.3 will be handled in the manner discussed below.

Site-generated hazardous wastes may be stored on-site in containers, existing tanks, or temporary portable tanks prior to treatment or removal from the facility. The wastes may be treated on-site in accordance with the facility's RCRA/HSWA permit. A temporary storage area may be developed for storage of these generated wastes, and if so, wastes will be stored in this area for less than ninety days. These wastes will then be transported to a permitted off-site Treatment, Storage, or Disposal Facility (TSDF) by a permitted hazardous waste hauler for appropriate disposal or further treatment (e.g. landfill, deep-well injection, incineration, cement kiln, recycling facility).

J-5 Maximum Extent of Operations

Table J.1 lists all existing and proposed hazardous waste management units at the ~~Safety-Kleen (Wichita), Inc.~~Clean Harbors Kansas, LLC facility. This table represents the maximum extent of operations which are currently planned to exist at this facility.

J-6 Maximum Waste Inventory

The maximum inventory of wastes in storage exists when all hazardous waste management units contain their maximum permitted capacity of waste. ~~Safety-Kleen (Wichita), Inc's~~The facility's potential maximum waste inventory is 463,477 gallons.[a]

[a] The maximum waste inventory was calculated by adding S01 (storage in containers) and S02 (storage in tanks) in the Part A permit application.

325,490 gallons (S01) + 137,987 gallons (S02) = 463,477 gallons

J-7 Schedule for Final Closure

Table J.3, Closure Activity Schedule - Final Facility Closure outlines the anticipated schedule for closing the ~~Safety-Kleen (Wichita), Inc.~~Clean Harbors Kansas, LLC facility. The schedule assumes that all hazardous waste management units identified in this plan (See Table J.1) will be closed.

During final closure, hazardous waste management units may be closed simultaneously or sequentially. Also, a temporary storage area may be developed for storage of wastes which are generated on-site during closure activities, and if so, wastes will be stored in this area for less than ninety days in appropriate containers or temporary tanks.

J-7a Expected Year of Final Closure

~~Safety-Kleen (Wichita), Inc.~~Clean Harbors Kansas, LLC does not expect to close the facility prior to the permit expiration (i.e., ten years after the effective date of the permit). Since the facility does not consist of disposal units such as landfills or surface impoundments, capacity restraints (such as landfill capacity) do not exist to force facility

closure. Therefore, ~~Safety-Kleen (Wichita), Inc.~~Clean Harbors Kansas, LLC will not estimate the year of final closure [per 40 CFR 264.112(b)(7)].

J-8 Closure Plan Amendment

~~Safety-Kleen (Wichita), Inc.~~Clean Harbors Kansas, LLC maintains a copy of the closure plan at the facility. ~~Safety-Kleen (Wichita), Inc.~~Clean Harbors Kansas, LLC will submit a written request for approval to change the closure plan, in accordance with 40 CFR 264.112(c) and 40 CFR 270.42, whenever one of the following occurs.

1. Changes in operating plans or facility design affect the closure plan.

2. Change in the estimated year of final closure (see section J-7a).

3. In conducting partial or final closure activities, unexpected events occur which affect the closure plan.

This notification will include a copy of the amended closure plan for review or approval by KDHE. It will be submitted at least 60 days prior to the proposed change in facility design or operation, or no later than sixty days after an unexpected event has occurred which has affected the closure plan. If an unexpected event occurs during the partial or final closure

period, ~~Safety-Kleen (Wichita), Inc.~~Clean Harbors Kansas, LLC will submit the notification or request no later than 30 days after the unexpected event's occurrence.

J-9 Individual Unit Closures

This section details the closure procedures of each individual hazardous waste management unit. During final facility closure and partial facility closure, each hazardous waste management unit will be closed in accordance with this section.

J-9a Container Management Unit (CMU) Closure

Partial facility closure (closure of an individual hazardous waste management unit), may be necessary during the active life of the facility. If a container management unit must be closed during the active life of the facility, it will be closed in accordance with this section (J-9a). At final closure of a container management unit, all hazardous waste and hazardous waste residues will be removed from the containment system. Remaining containers, liners, bases, and soil containing or contaminated with hazardous waste or hazardous waste residues will be either decontaminated or removed.

J-9a(1) Process and Unit Description

The container management units at the ~~Safety-Kleen (Wichita), Inc.~~Clean Harbors Kansas, LLC facility are used for storing and staging containers of hazardous and non-hazardous wastes. The container management units may also be used for the treatment of hazardous waste in containers. The wastes managed in these areas include liquids, sludges, and solids and are managed in containers of varying sizes. The LESW facility manages containerized waste in seven container management buildings, each roofed and constructed with concrete diking to minimize run-on and run-off. These buildings are divided into independently contained sub-areas called Container Management Unit (CMU)s. The maximum total permitted storage capacity of container management units on site is approximately 325,490 gallons. Figure J.1, Material Containment Areas (Drawing 50-01-10-002, Material Containment Areas presented in Section Y) depicts the location of each CMU at the facility; Section D of this permit application describes each CMU in more detail.

Figure J.1. Material Containment Areas

J-9a(2) Unit Closure Procedures

For the purposes of this closure plan, each container management unit includes the following structures/equipment:

- Containers, drums, pallets, marino bags, etc., and associated hazardous wastes, waste residues and constituents.

- All associated secondary containment structures (concrete pads, curbs, ramps, etc.).

- Associated equipment (e.g., conveyors, etc.).

Buildings which enclose CMUs and which do not come into direct contact with hazardous waste or hazardous waste containers are not part of the container management unit. Therefore, the buildings associated with CMUs, including floors which are not part of the container management unit, will not be subject to the decontamination procedures of this closure plan and may be left in place. However, these walls and floors will be visually

inspected and, if evidence of contamination exists, these structures will be cleaned.

~~Safety-Kleen (Wichita), Inc.~~Clean Harbors Kansas, LLC will close all CMUs at the facility as follows.

1. If modifications to the closure plan are desired and have not been previously approved in accordance with 40 CFR 270.42 and 264.112, the modified portions of the plan will not be implemented until approval by KDHE or other authorized agencies has been received.

2. ~~Safety-Kleen (Wichita), Inc.~~Clean Harbors Kansas, LLC will close the CMU(s) in accordance with the schedule outlined in Table J.4, Closure Activity Schedule - Container Management Unit (CMU) and discussed in Section J-9a(3) of this closure plan.

3. Within ninety days after receiving the final volume of hazardous wastes at the CMU(s), ~~Safety-Kleen (Wichita), Inc.~~Clean Harbors Kansas, LLC will remove all waste inventory and portable equipment from the area unless an extension has been requested and approved in accordance with 40 CFR 264.113(a). All waste inventories will be either treated on-site in accordance with the facility's RCRA/HSWA

permit or transported to a permitted TSDF for off-site management.

~~Safety-Kleen (Wichita), Inc.~~Clean Harbors Kansas, LLC will attempt to empty all drums to the extent described by 40 CFR 261.7(b) to satisfy the requirements for the exemption as defined by 40 CFR 261.7(a)(1). The successfully emptied drums will be transported to an off-site industrial waste disposal facility or a permitted RCRA/HSWA TSDF for disposal. If a container cannot be emptied to meet the definition in 40 CFR 261.7(b), then the container will be transported by a licensed hazardous waste hauler to a permitted off-site RCRA/HSWA TSDF for management.

4. All contaminated equipment, structures, and secondary containment systems will be:

   A. Dismantled and disposed of as hazardous waste at a RCRA/HSWA permitted off-site disposal facility, or

   B. Decontaminated in accordance with Section J-4a and disposed of at a solid waste landfill, or

   C. Decontaminated in accordance with Section J-4a and either salvaged for future use or left in place.

D. Successfully decontaminated equipment may be transferred to another TSDF for use.

5. ~~Safety-Kleen (Wichita), Inc.~~Clean Harbors Kansas, LLC will visually inspect the surface soils around the CMU(s). Any visible evidence of contamination will be evaluated for hazardous constituents and (if contamination is present) subsequently removed for proper management in accordance with Section J-4a of this closure plan.

   At final closure, the soil beneath the secondary containment systems will be closed in accordance with Section J-4a of this closure plan.

6. All wastes generated on-site from closure activities will be handled in accordance with Section J-4b of this closure plan.

7. ~~Safety-Kleen (Wichita), Inc.~~Clean Harbors Kansas, LLC will complete closure activities within 180 days after receiving either the final volume of hazardous wastes or closure plan approval by the agency, unless an extension has been requested and approved in accordance with 40 CFR 264.113(b).

8. The CMUs are not disposal units. Also, all hazardous wastes and hazardous waste constituents will be removed from the CMU during closure and all structures will be decontaminated in accordance with this closure plan. Therefore, the CMUs are not subject to the post-closure care requirements of 40 CFR 264.116 through 264.120.

J-9a(3) Unit Closure Schedule

Table J.4 outlines the anticipated schedule for the individual closure of a container management unit at the ~~Safety-Kleen (Wichita), Inc.~~Clean Harbors Kansas, LLC facility. During final closure of the facility, all HWMUs may be closed simultaneously and in accordance with the schedule presented in Table J.3.

J-9b Tank System Closure

Partial facility closure (closure of an individual hazardous waste management unit) may be necessary during the active life of the facility. If a tank or tank system must be closed during the active life of the facility, it will be closed in accordance with this section (J-9b). At closure of a tank or tank system, all hazardous waste and hazardous waste residues will be removed from the tank/tank system. Tanks, ancillary equipment, liners, bases, and soil containing or contaminated with hazardous waste or hazardous waste residues will be either decontaminated or removed.

J-9b(1) Process and Unit Description

Tank systems at the ~~Safety-Kleen (Wichita), Inc.~~Clean Harbors Kansas, LLC facility include storage/treatment tanks; the maximum permitted storage capacity of tanks on site is 137,987 gallons. The storage/treatment tanks have several uses at the ~~Safety-Kleen (Wichita), Inc.~~Clean Harbors Kansas, LLC facility, some of which are discussed below.

- Solvent and solid waste streams are blended, accumulated, and stored in tanks prior to being transported to an off-site cement kiln to be burned as an alternative fuel.

- Other wastes are received from generators either in drums or bulk and are transferred to tanks to await transportation to an off-site reclamation facility, incinerator, deep-well injection facility, landfill or other permitted TSDF.

- Finally, the ~~Safety-Kleen (Wichita), Inc.~~Clean Harbors Kansas, LLC facility manages solvent laden cartridges (e.g., dry cleaning cartridges). Cartridges are shredded and/or dried to recover solvent or other material for energy recovery and/or reuse, or they may be sent to an off-site TSDF without on-site processing. Recovered vapors are condensed and accumulated in a vessel which is purged after each drier batch. The solvent and water are separated in a phase separation tank, and then stored separately in designated tanks prior to shipment off-site to a TSDF for further reclamation, for disposal, or for other appropriate management.

The tanks used at ~~Safety-Kleen (Wichita), Inc.~~Clean Harbors Kansas, LLC vary in size. All tanks utilized for

hazardous waste management are equipped with a manual gaging port and high level alarms to minimize the potential for overflow. All hazardous waste management tanks operating under this permit

have secondary containment designed, installed, and operated to prevent migration of wastes or accumulated liquid to the environment. These containment systems, consisting of concrete slabs surrounded by concrete walls or dikes of varying height, enable the detection of and collection of releases and accumulated liquids. The concrete containment liner is also maintained free from cracks and gaps.

These tanks are summarized in Table J.1. In addition, Figure J.2, Tank Locations (Drawing 50-01-03-001, Tank Locations presented in Section Y) shows the location of each tank system at the facility. Section E of this permit application describes the tank systems in more detail. The tank systems are designed, constructed, and operated in accordance with 40 CFR 264.190 through 199.

J-9b(2) Unit Closure Procedures

For the purposes of this closure plan, each tank system includes:

- Tanks and associated hazardous wastes, waste residues and constituents;

All ancillary equipment including, but not limited to, piping, fittings, flanges, valves, and pumps; and

~~Figure J.2. Tank Location~~ Figure J.2. Tank Locations

- All associated secondary containment structures (concrete pads, curbs, ramps, etc.).

The buildings which contain tank systems and which do not come into direct contact with hazardous waste or hazardous waste tank systems are not part of the tank system. Therefore, these buildings associated with the tank systems, including floors which are not part of the tank system, will not be subject to the decontamination procedures of this closure plan and may be left in place. However, these walls and floors will be visually inspected and, if evidence of contamination exists, these structures will be cleaned.

The tank units at the Wichita facility may undergo periodic changes and upgrading in order to accommodate required regulatory and capacity changes and improvements in technology. Also, LESW will replace tanks if they become unfit for use. Since each secondary containment system contains several tanks, the ~~Safety-Kleen (Wichita), Inc.~~Clean Harbors Kansas, LLC facility could potentially close a single tank unit without closing the associated secondary containment system. However,

upon final facility closure all tank systems, including secondary containment, will be closed in accordance with this section.

~~Safety-Kleen (Wichita), Inc.~~Clean Harbors Kansas, LLC will close all tanks and/or tank systems at the facility as follows.

1. If modifications to the closure plan are desired and have not been previously approved in accordance with 40 CFR 270.42 and 264.112, the modified portions of the plan will not be implemented until approval by KDHE or other authorized agencies has been received.

2. ~~Safety-Kleen (Wichita), Inc.~~Clean Harbors Kansas, LLC will close the tanks and/or tank systems in accordance with the schedule outlined in Table J.5, Closure Activity Schedule - Tanks and Tank Systems and as discussed in Section J-9b(3) of this closure plan.

3. Within ninety days after receiving the final volume of hazardous wastes into the tank/tank system, ~~Safety-Kleen (Wichita), Inc.~~Clean Harbors Kansas, LLC will remove all waste inventory from the unit(s) unless an extension has been requested and approved in accordance with 40 CFR 264.113(a). All waste inventories will be either treated on-site in accordance with the facility's RCRA/HSWA permit

or transported to a permitted TSDF for off-site management.

4. All tanks, ancillary equipment, structures, and secondary containment systems (when applicable) will be:

   A. Dismantled and disposed of as hazardous waste at a RCRA/HSWA permitted off-site disposal facility, or

   B. Decontaminated in accordance with Section J-4a and disposed of at a solid waste landfill, or

   C. Decontaminated in accordance with Section J-4a and either salvaged for future use or left in place.

   D. Successfully decontaminated equipment may be transferred to another TSDF for use.

5. This step applies only when closing an entire tank system, including its secondary containment. If only closing a tank unit, go to Step 6 below. When closing a tank system, LESW will visually inspect the surface soils around the tank system containment area. In accordance with Section J-4a of

this closure plan, any visible evidence of contamination will be evaluated for hazardous constituents and, if contamination is present, subsequently removed for proper disposal or other appropriate off-site management.

At final closure, the soil beneath the secondary containment systems will be closed in accordance with Section J-4a of this closure plan.

6. All wastes generated on-site from closure activities will be handled in accordance with Section J-4b of this closure plan.

7. ~~Safety-Kleen (Wichita), Inc.~~Clean Harbors Kansas, LLC will complete closure activities within 180 days after receiving either the final volume of hazardous wastes into the tank unit(s) or closure plan approval from the agency, whichever is later, unless an extension has been requested and approved in accordance with 40 CFR 264.113(b).

8. The tank systems are not disposal units, and they have secondary containment meeting the requirements of 40 CFR 264.193(b) through (f). Also, all hazardous wastes and hazardous waste constituents will be removed from the

tanks/tank systems during closure and all structures will be decontaminated in accordance with this closure plan. Therefore, the tank/tank systems are subject to neither the post-closure care requirements of 40 CFR 264.116 through 264.120, nor the contingent post-closure plan requirements of 40 CFR 264.197(c).

J-9b(3) Unit Closure Schedule

Table J.5 outlines the anticipated schedule for the individual closure of a tank/tank system at the ~~Safety-Kleen (Wichita), Inc.~~Clean Harbors Kansas, LLC facility. During final closure of the facility, all HWMUs may be closed either sequentially or simultaneously and in accordance with the schedule presented in Table J.3.

J-9c Miscellaneous Unit Closure

Partial facility closure, closure of an individual hazardous waste management unit, may be necessary during the active life of the facility. If a miscellaneous unit must be closed during the active life of the facility, it will be closed in accordance with this section. At closure of a miscellaneous unit, all hazardous waste and, to the extent possible, hazardous waste residues will be removed from the unit. Furthermore, the miscellaneous unit, associated ancillary equipment, liners, bases, and soil containing or contaminated with hazardous waste or hazardous waste residues will be either decontaminated or removed.

J-9c(1) Process and Unit Description

"Miscellaneous Unit" is defined under 40 CFR 260.10 (as of July 1, 1990) as:

> A hazardous waste management unit where hazardous waste is treated, stored, or disposed of, and that is not a container, tank, surface impoundment, pile, land treatment unit, landfill, incinerator, boiler, industrial furnace, underground injection well with appropriate technical standards under 40 CFR Part 146, or unit eligible for a research, development, and demonstration permit under 40 CFR 270.65.

The ~~Safety-Kleen (Wichita), Inc.~~Clean Harbors Kansas, LLC facility has miscellaneous units as defined above. Table J.1 and Figure J.3, Miscellaneous Unit Locations (Drawing 50-57-10-001, Miscellaneous Unit Locations presented in Section Y) identify these units and their location at the Wichita facility. A brief description of each unit follows.

1. Shredder Unit - A toothed wheel shredder which reduces bulk objects into shreds.

2. Granulator Unit - A fixed knife shredder which reduces the size of solid objects.

3. Dispersing Unit - A unit which uses agitation to dissolve viscous liquids and solids removed from containers prior to transferring these materials into tanks or containers.

Figure J.3. Miscellaneous Unit Locations

4. Drum Washing Unit - A unit which mechanically removes waste residue from emptied drums.

5. Drum Scraper Unit - A device which loosens solid and viscous material inside a container so the material may be removed from the container for further management (e.g., treatment, storage).

J-9c(2) Unit Closure Procedures

For the purposes of this closure plan, each miscellaneous unit includes the following structures/equipment:

- The unit and associated hazardous wastes, waste residues and constituents;

- Ancillary equipment including, but not limited to, piping, fittings, flanges, valves, and pumps; and

- Associated secondary containment structures (concrete pads, curbs, ramps, etc.).

The buildings which contain miscellaneous units and which do not come into direct contact with hazardous waste or the unit are not part of the miscellaneous unit. Therefore, the buildings associated with the miscellaneous unit, including floors which are not part of the miscellaneous unit system, will not be subject to the decontamination procedures of this closure plan

and may be left in place. However, these walls and floors will be visually inspected and, if evidence of contamination exists, these structures will be cleaned.

The miscellaneous units at the ~~Safety-Kleen (Wichita), Inc.~~Clean Harbors Kansas, LLC facility may undergo periodic changes, upgrades, or partial closure in order to accommodate required regulatory and capacity changes and improvements in technology. Also, ~~Safety-Kleen (Wichita), Inc.~~Clean Harbors Kansas, LLC will periodically replace miscellaneous units if they become unfit for use and repair. Since some of the secondary containment systems contain miscellaneous units in addition to tanks and/or CMUs, the facility could potentially close or replace a single miscellaneous unit without closing the associated secondary containment system. However, upon final facility closure all miscellaneous units, including secondary containment, will be closed in accordance with this section.

~~Safety-Kleen (Wichita), Inc.~~Clean Harbors Kansas, LLC will close all miscellaneous units at the Wichita facility as follows.

1. If modifications to the closure plan are desired and have not been previously approved in accordance with 40 CFR 270.42 and 264.112, the modified portions of the plan will not be implemented until approval by KDHE or other

authorized agencies has been received.

2. ~~Safety-Kleen (Wichita), Inc.~~Clean Harbors Kansas, LLC will close the miscellaneous unit(s) in accordance with the schedule outlined in Table J.6, Closure Activity Schedule - Miscellaneous Units and discussed in Section J-9c(3) of this closure plan.

3. Within ninety days after receiving the final volume of hazardous wastes into the miscellaneous unit(s), ~~Safety-Kleen (Wichita), Inc.~~Clean Harbors Kansas, LLC will remove all waste inventory from the unit(s) unless an extension has been requested and approved in accordance with 40 CFR 264.113(a). All waste inventories will be either treated on-site in accordance with the facility's RCRA/HSWA permit or transported to a permitted TSDF for off-site management.

4. The unit(s), ancillary equipment, structures, and secondary containment systems (when applicable) will be:

   A. Dismantled and disposed of as hazardous waste at a RCRA/HSWA permitted off-site disposal facility, or

   B. Decontaminated in accordance with Section J-4a and disposed of at a solid waste landfill, or

C. Decontaminated in accordance with Section J-4a and either salvaged for future use or left in place.

D. Successfully decontaminated equipment may be transferred to another TSDF for use.

5. This step applies only when closing an entire miscellaneous unit system, including its secondary containment. If only closing a miscellaneous unit, go to Step 6 below. When closing the miscellaneous unit(s) and its associated secondary containment, ~~Safety-Kleen (Wichita), Inc.~~Clean Harbors Kansas, LLC will visually inspect the surface soils around the unit's containment area. Any visible evidence of contamination will be evaluated for hazardous constituents and (if contamination is present) subsequently removed for proper disposal or other off-site management in accordance with Section J-4a of this closure plan.

At final closure, the soil beneath the secondary containment systems will be closed in accordance with Section J-4a of this closure plan.

6. All wastes generated on-site from closure activities will be handled in accordance with Section J-4b of this closure plan.

7. ~~Safety-Kleen (Wichita), Inc.~~Clean Harbors Kansas, LLC will complete closure activities within 180 days after receiving either the final volume of hazardous wastes into the miscellaneous unit(s) or closure plan approval by the agency (whichever is later), unless an extension has been requested and approved in accordance with 40 CFR 264.113(b).

8. The miscellaneous units are not disposal units. Also, all hazardous wastes and hazardous waste constituents will be removed from the miscellaneous units during closure and all structures will be decontaminated in accordance with this closure plan. Therefore, the miscellaneous units are not subject to the post-closure care requirements of 40 CFR 264.116 through 264.120.

J-9c(3) Unit Closure Schedule

Table J.6 outlines the anticipated schedule for the individual closure of a miscellaneous unit at the ~~Safety-Kleen (Wichita), Inc.~~Clean Harbors Kansas, LLC facility. During final closure of the facility, all HWMUs may be closed either sequentially or simultaneously and in accordance with the schedule presented in Table J.3.

J-10 Financial Requirements

Closure costs are estimated in Appendix J-B, Closure Cost Estimate.

Financial requirements for hazardous waste TSDFs are addressed in Section K, Financial Requirements of this document.

Endnote

Groundwater Technology, Inc., Draft Remedial Investigation Report for the 29th d RI/FS, August 27, 1991.

APPENDIX J-A

TABLES

TABLE J.1

MAXIMUM EXTENT OF OPERATIONS

~~Safety-Kleen (Wichita), Inc.~~Clean Harbors Kansas, LLC - HAZARDOUS WASTE MANAGEMENT UNITS

HWMU[b]	UNIT	Wastes Stored/Function
C	CMU C100[c]	Hazardous waste - Container Management
C	CMU C200	Hazardous waste - Container Management
C	CMU C300	Hazardous waste - Container Management
C	CMU C400	Hazardous waste - Container Management

[b] HWMU - Hazardous Waste Management Unit - All HWMUs at the HRI Wichita facility are either Container Management Areas (C), Tanks/Tank Systems (T), or Miscellaneous Units (M) as defined by 40 CFR 260.10. The unit closure procedures for these units are detailed in Section J-9a, Section J-9b, and Section J-9c respectively.

[c] Each section represents an individually contained area (i.e. CMU). See Figure J.1 for CMU locations.

C	CMU C500	Hazardous waste - Container Management
C	CMU C600	Hazardous waste - Container Management
C	CMU C700	Hazardous waste - Container Management
C	CMU B100	Hazardous waste - Container Management
C	CMU B200	Hazardous waste - Container Management
C	CMU B300	Hazardous waste - Container Management

~~Safety-Kleen (Wichita), Inc.~~ Clean Harbors Kansas, LLC

RCRA Permit Application

Section J

Closure Plan

Appendix J-A - Tables

HWMU	UNIT	WASTES STORED/FUNCTION
C	CMU B400	Hazardous waste - Container Management
C	CMU D100	Hazardous waste - Container Management
C	CMU D200	Hazardous waste - Container Management
C	CMU D300	Hazardous waste - Container Management
C	CMU I100	Hazardous waste - Container Management
C	CMU I200	Hazardous waste - Container Management
C	CMU I300	Hazardous waste - Container Management
C	CMU J100	Hazardous waste - Container Management
C	CMU J200	Hazardous waste - Container Management
C	CMU J300	Hazardous waste - Container Management
C	CMU J400	Hazardous waste - Container Management
C	CMU J500	Hazardous waste - Container Management
C	CMU J600	Hazardous waste - Container Management
C	CMU J700	Hazardous waste - Container Management
C	CMU L100	Hazardous waste - Container Management
C	CMU P100	Hazardous waste - Container Management
C	CMU P200	Hazardous waste - Container Management
T	V-1	Hazardous Waste Liquid
T	V-2	Hazardous Waste Liquid
T	V-3	Hazardous Waste Liquid
T	V-4	Hazardous Waste Liquid

HWMU	UNIT	WASTES STORED/FUNCTION
T	V-5	Hazardous Waste Liquid
T	V-6	Hazardous Waste Liquid
T	V-7	Hazardous Waste Liquid
T	V-8	Hazardous Waste Liquid
T	V-9	Hazardous Waste Liquid
T	V-10	Hazardous Waste Liquid
T	V-11	Hazardous Waste Liquid
T	V-12	Hazardous Waste Liquid
T	V-13	Hazardous Waste Liquid
T	V-14	Hazardous Waste Liquid
T	V-15A	Hazardous Waste Liquid
T	V-15B	Hazardous Waste Liquid
T	V-15C	Hazardous Waste Liquid
T	V-15D	Hazardous Waste Liquid
T	V-16	Hazardous Waste Liquid
T	V-17	Hazardous Waste Liquid
M	V-20	Shredder Unit
M	V-21	Granulator Unit
M/T	V-26	Dispersing Unit

HWMU	UNIT	WASTES STORED/FUNCTION
M	V-34	Drum Washing Unit
M	V-35	Drum Scraping Unit
C	All CMUs	Treatment in Containers

~~Safety-Kleen (Wichita), Inc.~~Clean Harbors Kansas, LLC

RCRA Permit Application

Section J

Closure Plan

Appendix J-A - Tables

TABLE J.2 HAS BEEN REMOVED FROM THE CLOSURE PLAN

TABLE J.3

CLOSURE ACTIVITY SCHEDULE - FINAL FACILITY CLOSURE

Calendar Days Lapsed	Closure Activity
-45	Notification to KDHE or the EPA Region 7 Administrator.
0	Receipt of known final volume of hazardous waste or receipt of final closure plan approval from agency (whichever is later). Begin work-force mobilization.
	Begin treatment and removal of tank waste inventory.
	Begin treatment and removal of container waste inventory.
90	Complete treatment and removal of all hazardous waste inventories.
120	Complete decontamination of tanks, container management units and miscellaneous units.
150	Complete dismantling/removal of all generated wastes, temporary storage units, and decontaminated tanks, equipment, and structures (if removal is necessary).
	Visually inspect surface soils for contamination and begin remediation procedures if necessary.
180	Complete final closure activities.
200	Inspection of facility by a Professional Engineer.

240	Submit a certification of closure to KDHE or the EPA Region 7 Administrator.

TABLE J.4

CLOSURE ACTIVITY SCHEDULE - CONTAINER MANAGEMENT UNIT

Calendar Days Lapsed	Closure Activity
0	Receipt of known final volume of hazardous waste into the container management unit or receipt of closure plan approval from agency (whichever is later). Begin work-force mobilization.
	Begin treatment and removal of waste inventory.
90	Complete treatment and removal of all hazardous waste inventories.
120	Complete emptying all drums and removal of drums from facility.
150	Complete decontamination of secondary containment structures and hazardous waste handling equipment.
	Visually inspect surface soils for contamination and begin remediation procedures if necessary.
180	Complete final closure activities.

TABLE J.5

CLOSURE ACTIVITY SCHEDULE - TANKS AND TANK SYSTEMS

Calendar Days Lapsed	Closure Activity
0	Receipt of known final volume of hazardous waste or receipt of closure plan approval from agency (whichever is later). Begin work-force mobilization.
	Begin treatment and removal of tank waste inventory.
90	Complete treatment and removal of all hazardous waste inventories.
120	Complete decontamination of tanks, ancillary equipment, and secondary containment systems (when applicable).
150	Complete dismantling/removal of decontaminated tanks, equipment, and secondary containment structures (when removal is necessary).
	Visually inspect surface soils for contamination and begin remediation procedures if necessary.
180	Complete final closure activities.

TABLE J.6

CLOSURE ACTIVITY SCHEDULE - MISCELLANEOUS UNITS

Calendar Days Lapsed	Closure Activity
0	Receipt of known final volume of hazardous waste or receipt of closure plan approval from agency (whichever is later). Begin work-force mobilization.
120	Complete decontamination of miscellaneous unit(s), ancillary equipment, and secondary containment systems (when applicable).
150	Complete dismantling/removal of decontaminated miscellaneous unit(s), equipment, and secondary containment structures (when removal is necessary). Visually inspect surface soils for contamination and begin remediation procedures if necessary.
180	Complete final closure activities.

APPENDIX J-B

CLOSURE COST ESTIMATE

APPENDIX J-C

COMPLIANCE SCHEDULE
CLOSURE OF V-29, V-30, V-31, V-32

Tanks V-29, V-30, V-31, and V-32 were used under Interim Status at the facility as sparge (aeration) tanks. These tanks are no longer necessary to the operation of the facility. ~~Safety-Kleen (Wichita), Inc.~~Clean Harbors Kansas, LLC plans to close these tanks in accordance with the procedures discussed in Section J-9(b) of the Closure Plan. KDHE has requested that ~~Safety-Kleen (Wichita), Inc.~~Clean Harbors Kansas, LLC submit a compliance schedule for closure of these four tanks as part of the revisions to the Part B permit application, rather than preparing a separate request for approval to close these tanks. This Attachment to the Closure Plan constitutes the compliance schedule.

Tanks V-29 and V-30 are each 90 gallon tanks. Tanks V-31 and V-32 hold 115 gallons each. All four of the tanks are located in Area D300, in a secondary containment area shared with other process units and container storage. At this time, the tanks have been emptied and are out of service. ~~Safety-Kleen (Wichita), Inc.~~Clean Harbors Kansas, LLC does not intend to put these tanks back into hazardous waste service at the site.

~~Safety-Kleen (Wichita), Inc.~~Clean Harbors Kansas, LLC plans to

close these tanks following the partial closure procedures outlined in Sections J-4 and J-9(b) of the RCRA Part B permit application. The steps to be taken are listed below.

1. Surfaces will be scraped, sandblasted, brushed, or swept to remove all loose or caked residue. Surfaces will then be triple rinsed. The first wash/rinse will be performed with a high-pressure stream of steam or water with suitable detergents or other cleaning additives. The second wash/rinse will be performed using clean water with cleaning additives. Accumulated liquids from the two first washes will be collected and handled in accordance with Section J-4b of this closure plan. The third wash/rinse will be performed with clean (potable) water.

2. The equipment will be visually inspected after the triple wash/rinse to assess the presence of visible residue. If necessary, the facility will repeat all, or part, of the above procedures.

3. A representative sample will be taken of the rinse water from the final rinse of each hazardous waste management unit. These samples will be analyzed according to the Toxic Characteristic Leaching Procedure (TCLP) (40 CFR 261.24 as amended June 29, 1990).

4. A unit will be considered decontaminated when the rinsate sample analysis results are lower than the values/levels listed in Table J.2, Decontamination Rinsate Analysis, and when no visible residues remain on the unit.

5. If the unit is not decontaminated after performing Steps 1 through 4, the facility will either repeat the above procedures or dismantle the unit for further management and/or disposal at an off-site permitted TSDF as a hazardous waste. Equipment disposed of in a landfill will meet the applicable Land Disposal Restriction (LDR) standards of 40 CFR 268.

Because the secondary containment system in which Tanks V-29, V-30, V-31, and V-32 are located serves as containment for other units that remain active, it will not be decontaminated during this partial closure. Similarly, ancillary equipment (e.g., pumps, piping) that is associated with other active units in the area will not be closed during this partial closure.

~~Safety-Kleen (Wichita), Inc.~~Clean Harbors Kansas, LLC is prepared to initiate partial closure of Tanks V-29, V-30, V-31, and V-32 upon receipt of approval from the KDHE. Partial closure will be performed in accordance with the schedule presented in Table J.7.

Table J.7

Schedule for Partial Closure
Tanks V-29, V-30, V-31, V-32

Partial Closure Activity	Days to Complete (from date authorized to proceed)
Decontaminate each tank according to the procedures in the Closure Plan.	30
Decontaminate ancillary equipment unique to the tanks addressed in this partial closure.	30
Analytical work complete.	60
Receive engineer's certification of closure.	90
Provide certification of closure to agency; closure complete.	105

Table of Contents

List of Appendices ..... Page i

List of Acronyms ..... Page i

K-1 Financial Assurance: ..... Page 1

K-2 Insurance Coverage: ..... Page 3

K-3 Notice in Deed: ..... Page 4

List of Appendices

Appendix K-A, Financial Assurance Information
Appendix K-B, Certificate of Insurance for Closure or Post Closure Care
Appendix K-C, Hazardous Waste Certificate of Insurance
Appendix K-D, Notice in Deed

List of Acronyms

~~Safety-Kleen (Wichita), Inc. (SKW)~~ Clean Harbors Kansas, LLC (CHK)
Certificate of Insurance for Closure or Post Closure Care (CI)
Treatment, Storage and Disposal (TSD)
Kansas Administrative Regulations (KAR)

K-1 Financial Assurance: 40 CFR 264.143

~~Safety-Kleen (Wichita), Inc. (SKW)~~Clean Harbors Kansas, LLC (CHK) has chosen to use a Certificate of Insurance for Closure or Post Closure Care (CI) to meet facility closure financial assurance requirements. The CI is currently issued by the National Insurance and Indemnity Corporation of South Burlington, Vermont.

Appendix K-A, Financial Assurance Information, summarizes facility information, funds assured for closure, and details regarding the CI. The CI is amended annually for inflation as required by 40 CFR 264.142(b) for hazardous waste Treatment, Storage, and Disposal (TSD) facilities operating under a Hazardous Waste Permit. The facility closure cost estimate and corresponding funding instrument will be adjusted on an annual basis for: 1) inflation; and 2) whenever facility changes affecting closure costs occur. A copy of the CI is presented in Appendix K-B, Certificate of Insurance for Closure or Post Closure Care.

One of the options specified in 40 CFR 264.143 paragraphs (a) through (f) must be established to provide financial assurance for closure of a TSD facility. ~~SKW~~CHK may convert the financial instrument described above to an alternate option specified by federal regulations.

K-2 Insurance Coverage: 40 CFR 264.147

~~SKW~~CHK maintains insurance policies to cover general liability, automobile liability, workers compensation, employers' liability and environmental impairment liability (pollution legal liability). The environmental impairment liability includes both sudden and non-sudden pollution coverage. A copy of the Hazardous Waste Facility Certificate of Insurance for accidental occurrences is presented in Appendix K-C, Hazardous Waste Certificate of Insurance.

K-3 Notice in Deed: 40 CFR 119(b)(1)

In compliance with Kansas Administrative Regulations (KAR) 28-31-8(c) and in anticipation of Post-closure Notices required of TSDFs, ~~SKW~~CHK has submitted correspondence dated April 16, 1991 regarding property use for hazardous waste management activities to the Registrar of Deeds for Sedgwick County. Copies of these documents are presented in Appendix K-D, Notice in Deed.

Appendix K-A

Financial Assurance Information

Facility Information

EPA ID NO:	KSD007246846
Facility Name:	~~Safety-Kleen (Wichita), Inc.~~Clean Harbors Kansas, LLC
Facility Location:	2549 North New York, Wichita, Kansas 67219

Certificate of Insurance for Closure or Post Closure Care (CI)

CI Policy Number:	~~95NICPC0128~~PEC0007078
Issuing Institution:	~~National Insurance and Indemnity Corporation, South Burlington, Vermont~~
~~Execution Date:~~	~~February 15, 1995~~
~~Funds Assured:~~	~~$ 1,334,313.00~~Indian Harbor Insurance Company, Stamford, CT
Execution Date:	March 11, 2002
Funds Assured:	$ 1,519,094.00

Appendix K-B

Certificate of Insurance for Closure or Post Closure Care

Appendix K-C

Hazardous Waste Certificate of Insurance

Appendix K-D

Notice in Deed

Table of Contents

List of Figures.....Page ii
List of Appendices.....Page ii
Acronym table.....Page ii
L-1 Information Requirements for Solid Waste Management Units: ..... Page 1
L-1a Description of Solid Waste Management Units: .... Page 1
L-1b SWMU - Area West of Building B 40 CFR 270.14(d) Page 3
L-1b(1) General Description of SWMU - Area West of Building B ..... Page 3-A
L-1b(2) Releases from SWMU - Area West of Building B ..... Page 3-C
L-1b(3) Sample and Analytical Data ..... Page 3-C

L-2 Information Pertaining to Releases: ..... Page 4

L-3 Superfund Activities ..... Page 5

List of Figures

Figure L.1, Location of SWMU - Area West of Building B

List of Appendices

Appendix L-A, Draft 29th and Mead RI/FS Report - Excerpts

Acronym Table

Solid Waste Management Unit (SWMU)
~~Safety-Kleen (Wichita), Inc. (SKW)~~ Clean Harbors Kansas, LLC (CHK)
Kansas Administrative Regulations (KAR)
United States Environmental Protection Agency (USEPA)

L-1 Information Requirements for Solid Waste Management Units: 40 CFR 270.14(d)

The purpose of this section is to provide information regarding the Solid Waste Management Unit (SWMU)s at the ~~Safety-Kleen (Wichita), Inc.~~Clean Harbors Kansas, LLC facility located in Wichita, Kansas. This section is provided to fulfill the requirements of the Kansas Administrative Regulations (KAR), Title 28, Article 31 and 40 CFR Part 270. Article 31, Hazardous Waste Management Standards and Regulations, of the KAR incorporates, with few additions, the RCRA regulations contained in 40 CFR Parts 260 through 270. Therefore, this section will refer only to the federal regulations.

L-1a Description of Solid Waste Management Units: 40 CFR 270.14(d)(1)

A description of the ~~Safety-Kleen (Wichita), Inc. (SKW)~~Clean Harbors Kansas, LLC (CHK) facility is presented in section B (Facility Description) of this RCRA permit application. Specific information regarding active SWMUs utilized for hazardous waste management is presented in Sections D (Use and Management of Containers), E (Tank Systems), and M (Other Regulated Units). These sections include the following information:

! Type, Location and Description of the SWMUs:

Sections B, D, E, and M (Facility Description, Use and Management of Containers, Tank Systems, and Other Regulated Units) of the RCRA permit application contain descriptions of RCRA regulated SWMUs at the facility. These descriptions include the general dimensions of these units. In addition, the Facility Description, Section B also contains a topographic map illustrating the location of each SWMU within the facility as required by 40 CFR 270(b)(19).

! Dates of Operation:

~~SKW~~CHK is an existing waste management facility. However, the site has been used for other business purposes by companies which have sequentially located at the site for some forty years. The industrial district of the area developed over the past 95 years. The history of hazardous waste operations under EPA ID No. KSD007246846 began in 1979 with Reid Supply Co., Inc. Conservation Services, Inc. purchased certain assets, including the permit (e.g., from Reid Supply Co. in 1986. Subsequently, Hydrocarbon Recyclers, Inc. of Wichita acquired the capital stock of Conservation Services, Inc. in 1987.

! Description of Wastes:

The ~~SKW~~CHK facility stores, treats, and recovers for recycling hazardous and nonhazardous wastes. The types of wastes managed in the RCRA regulated SWMUs are identified in Sections A (Part A Application) and C (Waste Characterization). The sampling and analysis provisions for managing these waste types are provided in Appendix C-A (Waste Analysis Plan) of Section C.

L-1b SWMU - Area West of Building B 40 CFR 270.14(d)

Excavation of a roof drainage system resulted in the discovery of an additional SWMU, apparently consisting of buried paint cans, located west of Building B. Other wastes may be present as well; the SWMU has not been fully investigated. This SWMU did not result from any ~~SKW~~CHK activity at the site. Available information, as required by 40 CFR 270.14(d) is provided in this section.

L-1b(1) General Description of SWMU - Area West of Building B

A SWMU located in an area west of Building B and apparently consisting of buried paint cans was discovered during excavation for site improvements during the spring of 1992; a full investigation of this SWMU has not been completed. The SWMU, located approximately twenty feet west of the southwest corner of Building B, covers an area of approximately twenty square feet. Figure L.1, Location of SWMU - Area West of Building B, shows the location of this disposal area. The waste was tentatively identified as paint-related wastes.

Historical use of the SWMU located west of Building B is not definitively known. The property presently occupied by ~~SKW~~CHK was used for paint manufacturing from the mid 1940's to the mid 1970's. Reid Supply acquired the site in 1979, and HRI purchased the LESW facility in 1987. The on-site burial of these drums reportedly occurred prior to acquisition of the site by Reid Supply. ~~SKW~~CHK has not buried any waste in this SWMU, nor at any other location on the property.

of Buildin

L-1b(2) Releases from SWMU - Area West of Building B

~~SKW~~CHK is not aware of any releases of waste from this SWMU. Therefore, the information required under 40 CFR 270.14(d)(2) is not applicable. The SWMU area west of Building B will be evaluated for potential releases as part of a corrective action program administered under the RCRA/HSWA permit.

L-1b(3) Sample and Analytical Data

Analytical data identified several hazardous constituents in wastes present in the SWMU area west of Building B. The contents of some paint cans and associated soil samples were analyzed. Analytical results are presented in Appendix L-A.

L-2 Information Pertaining to Releases: 40 CFR 270.14(d)(2)

~~SKW~~CHK is not aware of any releases of hazardous waste or hazardous waste constituents from regulated units within the facility. Therefore, the information required under 40 CFR 270.14(d)(2) is not available (i.e., 40 CFR 270.14(d)(2) is not applicable).

A site inspection for the purpose of identifying potential SWMUs was completed by B. & V. Waste Science and Technology Corporation under contract Number 68-W9-0006 to United States Environmental Protection Agency (USEPA) Region VII in 1990. The Draft Preliminary Assessment Report - RCRA Facility Assessment, ~~Safety-Kleen (Wichita), Inc.,~~ Clean Harbors Kansas, LLC, Wichita, Kansas is presented as an appendix to Section M, Other Regulated Units.

L-3 Superfund Activities

The ~~SKW~~CHK facility is located within the area identified as the 29th and Mead Comprehensive Environmental Response, Compensation, and Liability Act or "Superfund" site in the Wichita North Industrial District. Excerpts from the Draft Preliminary Assessment Report are presented as Appendix L-A, Draft 29th and Mead RI/FS Report - Excerpts.

Appendix L-A

Draft 29th and Mead RI/FS Report - Excerpts

Groundwater Technology, Inc., August 1991. *Draft Remedial Investigation Report of the 29th and Mead RI/FS.* Volume 1, prepared for Wichita North Industrial District, 60 pp.

Appendix L-A
Draft 29th and Mead RI/FS Report - Excerpts

Index of Included Material

Title Page	Page i
Table of Contents	Page ii to v
Executive Summary	Page x to xviii
Section 1.3 - Site Location and Description	Page 5
Section 2.4 - Reid Supply, Inc.	Page 11
Section 4.0 - Physical Characteristics of Study Area	Page 25 - 28
4.1 - Regional Geology	
4.2 - Regional Hydrogeology	
4.3 - Site Stratigraphy	
4.4 - Site Hydrogeology	

Excerpts from:

Groundwater Technology, Inc., August 1991. *Draft Remedial Investigation Report of the 29th and Mead RI/FS.* Volume 1, prepared for Wichita North Industrial District, 60 pp.

TABLE OF CONTENTS

List of Figures ..... Page iii

List of Appendices ..... Page iii

List of Referenced Drawings ..... Page iii

M-1 Introduction ..... Page 1
M-1a Wastes Managed in Miscellaneous Units ..... Page 1

M-2 Unit Descriptions ..... Page 5
M-2a Shredder and Granulator Units -closed August, 1998
M-2b Drum Scraper Unit ..... Page 5
M-2b(1) Purpose ..... Page 5
M-2b(2) Drum Scraper Unit compliance with standards for emissions or releases ... Page 6
M-2b(2)(a) Prevention of releases to the subsurface environment or groundwater ..... Page 6
M-2b(2)(b) Prevention of releases to surface water, wetlands or soil ..... Page 8
M-2b(2)(c) Prevention of releases to the air ..... Page 8
M-2b(2)(d) Monitoring and Inspections . Page 10
M-2d Dispersing Unit ..... Page 10
M-2d(1) Purpose ..... Page 10
M-2d(2) Dispersing Unit compliance with applicable hazardous waste treatment and storage standards ..... Page 12
M-2d(2)(a) Description of Tank System . Page 12
M-2d(2)(b) Operational Practices ..... Page 14
M-2d(2)(b)(1) General Operating Requirements ..... Page 14
M-2d(2)(b)(2) Description of Feed Systems, Safety Cutoff, Bypass Systems, and Pressure Controls ..... Page 15
M-2d(2)(b)(3) Special Requirements for Handling Incompatible, Ignitable, or Reactive Waste ..... Page 16
M-2d(2)(b)(4) Inspections ..... Page 17
M-2d(2)(b)(5) Contingency Measures .. Page 17

M-2d(2)(c) Containment and Detection of Releases ..... Page 17
M-2d(3) Dispersing Unit compliance with standards for emissions or releases .. Page 20
M-2d(3)(a) Prevention of releases to the subsurface environment or groundwater ..... Page 20
M-2d(3)(b) Prevention of releases to surface water, wetlands or soil ..... Page 22
M-2d(3)(c) Prevention of releases to the air ..... Page 22
M-2d(3)(d) Monitoring and Inspections . Page 23
M-2e Drum Washing Unit ..... Page 24
M-2e(1) Purpose ..... Page 24
M-2e(2) Drum Washing Unit compliance with standards for emissions or releases .. Page 26
M-2e(2)(a) Prevention of releases to the subsurface environment or groundwater: 264.601 (a) .. Page 26
M-2e(2)(b) Prevention of releases to surface water, wetlands or soil ..... Page 27
M-2e(2)(c) Prevention of releases to the air ..... Page 27
M-2e(2)(d) Monitoring and Inspections . Page 28

M-3 Hydrologic, Geologic, and Meteorologic Assessments .. Page 29

M-4 Potential Pathways for Exposure ..... Page 30
M-4b Drum Scraper Unit ..... Page 30
M-4d Dispersing Unit ..... Page 31
M-4e Drum Washing Unit..... . .Page 32
M-5 Effectiveness of Treatment ..... Page 33
M-5b Drum Scraper Unit ..... Page 33
M-5d Dispersing Unit ..... Page 34
M-5e Drum Washing Unit ..... Page 35

M-6 Special Requirements for Handling Ignitable, Reactive and Incompatible Wastes ..... Page 35

List of Figures

Figure M.1, Miscellaneous Unit Locations
Figure M.2, P&ID New Process/Condensate Separator
Figure M.5, 55 Gallon Drum Scraper
Figure M.6, Motor Location and Specification
Figure M.8, 1129 Gallon Dispersing Tank
Figure M.9, 40/50/60 VSM 18 Disperser
Figure M.10, Barrel Dump Assembly
Figure M.11. P&ID Process Areas
Figure M.12, Triple Rinse - HRI

Note: Figures M.2 through M.12 are presented in Appendix M-A

List of Appendices

Appendix M-A,
Appendix M-C, SK Air Monitoring Data
Appendix M-E, Operating Manuals: Dispersing Unit
Appendix M-F, Draft Preliminary Assessment Report for ~~SKW~~CHK

List of Referenced Drawings

Referenced drawings are presented in Section Y

Drawing 50-57-10-001, Miscellaneous Unit Locations
Drawing D-35-52-800, 55 Gallon Drum Scraper
Drawing D-43-10-6-100, Motor Location and Specification
Drawing PD 12/3/91, 1129 Gallon Dispersing Tank
Drawing DL34055, 40/50/60 VSM 18 Disperser; FCF-Bowers
Drawing Barrel Dump Assembly; PD 1/25/91
Drawing 665300-4-W404F, P&ID Process Areas, FD
Drawing D990043, Triple Rinse - HRI; BRI, Inc.

Acronym Table

~~Safety-Kleen (Wichita), Inc. (SKW)~~ Clean Harbors Kansas, LLC (CHK)
Title 40 of the Code of Federal Regulations (40 CFR)
Occupational Safety and Health Administration (OHSA)
National Fire Protection Association (NFPA)
Waste Analysis Plan (WAP)

M-1 Introduction

This section describes several waste management units at ~~Safety-Kleen (Wichita), Inc. (SKW)~~ Clean Harbors Kansas, LLC (CHK) which have not been classified by state or federal regulatory agencies as tanks or containers for the purpose of regulation under Title 40 of the Code of Federal Regulations (40 CFR) Part 264. These units are the Drum Scraper Unit, the Drum Washing Unit, and The Dispersing Unit which is also permitted as a tank (V-26) in Section E, Tank Systems. All of these units have been classified as miscellaneous units regulated under 40 CFR 264 Subpart X by Region 7 of the U.S. Environmental Protection Agency. Each of these units may be used to physically or chemically alter hazardous wastes managed at ~~SKW.~~ CHK. Their specific locations are shown on Figure M.1, Miscellaneous Unit Locations (Drawing 50-57-10-001, Miscellaneous Unit Locations). This section will address the regulations for miscellaneous units as they apply to each unit listed above.

M-1a Wastes Managed in Miscellaneous Units

Miscellaneous units on site are utilized for regulated and non-regulated waste management. Any regulated RCRA wastes identified on the facility Part A application (presented in Section A of

this application) may be managed in any miscellaneous unit on site so long as the waste is compatible with equipment or concurrently managed wastes.

Facility waste management practices have been developed to prevent the perpetuation of waste code(s) managed in tank systems and miscellaneous units. The waste code(s) applicable to a given wastestream processed in a unit is(are) retained for a specified processing time interval or processing volume; the waste code(s) associated with a given waste is(are) dropped from documentation after that specified time interval or process volume is elapsed. Specific practices for tanks, miscellaneous units, and piping are outlined below.

- Tanks - After removal of a listed or characteristic waste, tanks will be cleaned by rinsing, scraping, brushing, or other physical method until deemed visually clean. Waste codes of previously managed wastes will not be carried on subsequent waste streams managed.

- Miscellaneous Units - The three unit volumes processed through the unit after completion of management of a listed or characteristic waste will be considered as carrying the same listed codes, or characteristic codes (unless tested

and shown otherwise). Waste codes will be dropped from waste streams managed subsequent to these three unit volumes. The volumes of each miscellaneous unit are listed below:

Drum Scraper	72 gallons
Drum Washer	1173 gallons
Disperser	0 gallons (accounted for with tank storage volumes).

Piping - The one unit volume processed through piping after completion of management of a listed or characteristic waste will be considered as carrying the same listed codes, or characteristic codes (unless tested and shown otherwise). Waste codes will be dropped from waste streams managed subsequent to this one unit volume.

Figure M.1. Miscellaneous Unit Locations

M-2 Unit Descriptions

M-2a Shredder and Granulator Units Note: the Shredder and Granulator units were closed in August, 1998.

M-2b Drum Scraper Unit

M-2b(1) Purpose

The Drum Scraper Unit is used to enhance the removal of solid, viscous, and/or sticky materials from containers such as 55 gallon drums. Before a container is placed in the Drum Scraper Unit, the top of the container is removed, and any free liquid standing on top of the drummed waste may be pumped out. When the container containing waste is placed in the unit, a cylinder extends down from the unit into the container. A rotating metal blade then extends down inside the cylinder and into the waste, where it cuts up the waste so it can be dumped out. Once the cutting is finished the cylinder and blade assembly is raised from the container, the container is immediately put into the dumper, and the contents are dumped into the Dispersing Unit; alternatively, the top is placed back on the container and the container is moved by conveyor to the Dispersing Unit or to another processing area.

The Drum Scraping Unit is constructed primarily of carbon steel and is located in the Process Area at ~~SKW~~CHK as shown in Figure M.1.

Figure M.5, 55 Gallon Drum Scraper (Drawing D-35-52-800, 55 Gallon Drum Scraper) and Figure M.6, Motor Location and Specification Drawing D-43-10-6-100, Motor Location and Specification) show the dimensions and configuration of the unit.

The regulations in 40 CFR 264 Subparts I through O do not apply specifically to the Drum Scraping Unit; however, this unit is located in a container management area and has secondary containment which meets the requirements of 40 CFR 264 Subpart I, Use and Management of Containers.

M-2b(2) Drum Scraper Unit compliance with standards for emissions or releases: 264.601 and 264.602

M-2b(2)(a) Prevention of releases to the subsurface environment or groundwater: 264.601 (a)

Releases of waste from the Drum Scraper Unit to the subsurface or groundwater are extremely unlikely for these reasons.

(1) The waste processed by the Drum Scraper Unit is predominantly solid, and has had most free liquids removed.

(2) The Drum Scraper Unit is located in a secondary containment area which meets the requirements of 40 CFR 264 Subparts I and J. The containment has sufficient volume to contain a spill of the entire contents of a container within the unit (the unit has no waste holding capacity of its own), and is coated with a material that is sufficiently impervious to the wastes processed in the unit. Secondary containment volume calculations are included in appendices of Section D, Use and Management of Containers, and Section E, Tank Systems.

(3) Various aspects of the condition of this unit and of the containment area are inspected each operating day or week, as described in Section F, Inspection Plan. Leaks or spills that might be associated with this unit are cleaned up within 24 hours of their discovery, or as soon as it is safe and practicable.

(4) The unit is located inside a containment unit with a large area, and is physically separated and removed from any surface water, wetlands, or soil. The location of the facility relative to nearby bodies of water is shown in the topographic map in Section B, Facility Description.

(5) ~~SKW~~CHK maintains a Contingency/Emergency Plan for use in situations such as a major spill, a fire, or an explosion. This plan incorporates measures to mitigate releases to the

environment from the unit, and to protect human health and the environment from such releases.

M-2b(2)(b) **Prevention of releases to surface water, wetlands or soil: 264.601(b)**

Releases of waste from the Drum Scraper Unit to surface water, wetlands, or soil are extremely unlikely for the reasons stated in M-2b(2)(a).

M-2b(2)(c) **Prevention of releases to the air: 264.601(c)**

The design and operation of the Drum Scraper Unit controls releases of waste constituents to the air from the unit to prevent releases which may adversely affect human health or the environment. The wastes processed in this unit are generally thick, viscous liquids or solids contaminated with organic solvents. These solvents could potentially volatilize during the scraping process. While the container is being scraped a cylinder extends down into the container from the unit, and houses the metal boring and scraping assembly. The cylinder fits snugly inside the container and is closed at the top to minimize emissions. Vapors released from the containers during the time that they are opened and the cylinder is not inside them would be

nominal since the containers are opened just before they are processed in the scraper, and are reclosed or are dumped right after they are scraped.

The only people who could potentially be exposed to these very small quantities of vapors are the ~~SKW~~CHK employees who work in the immediate area, and they are protected from exposure by the protective clothing and equipment that they wear. The potential for contaminants reaching persons outside the Processing Area or outside the facility, if any such potential exists at all, is much lower due to the emission controls discussed above. An exposure study was performed in August of 1991 at ~~SKW~~CHK to determine the potential for exposure of workers in the Processing Area (where the Drum Scraper Unit is located) to organic solvent vapors. The air in this area was monitored for six different organic compounds. Of these six compounds only three were detected, and they were detected in trace quantities that were well below the Occupational Safety and Health Administration (OSHA) permissible exposure levels for unprotected workers. A summary of the results of this study is contained in Appendix M-C.

M-2b(2)(d) Monitoring and Inspections: 264.602

The Drum Scraper Unit, and the surrounding area will be visually inspected each operating day for evidence of leaks or spills in accordance with the facility inspection plan described in Section F, Inspection Plan. The secondary containment system will also be inspected each operating day for evidence of cracks or breaches of containment in accordance with this inspection plan.

M-2c Dryer Note: the Dryer Unit was closed in September, 1996.

M-2d Dispersing Unit

M-2d(1) Purpose

The Dispersing Unit is used to blend various wastes and solvents into a fuel, to facilitate storage or transportation, or for other waste management purposes. It consists mainly of a tank with a mixing blade inside, attached to a container dumping assembly. These components are shown in Figure M.8, 1129 Gallon Dispersing Tank; Figure M.9, 40/50/60 VSM 18 Disperser; and Figure M.10, Barrel Dump Assembly; in Appendix M-A (Drawing PD

12/3/91, 1129 Gallon Dispersing Tank; Drawing DL34055, 40/50/60 VSM 18 Disperser; FCF-Bowers; and Drawing Barrel Dump Assembly; PD 1/25/91). The operation of Dispersing Unit is described below.

Wastes and other materials are placed in the Dispersing Unit Tank by pumping from tanks, containers, or trucks; or by dumping from containers using the container dumper. The container dumper automatically tips the container so that the loose contents pour in a chute and into the Dispersing Unit Tank. The dumper also has the capability to spray high pressure solvent, (e.g. diesel fuel), into the container while it is tipped in order to enhance removal of the waste. The material in the Dispersing Unit Tank is blended and mixed by a rotating mixing blade and, if necessary, by circulating the material through a gear pump, and/or a small shredding device. The blended material is then pumped to tanks or containers for further blending, for transportation, and/or for storage. Figure M.11. P&ID Process Areas (Drawing 665300-4-W404F, P&ID Process Areas, FD) schematically shows the Dispersing Unit and its associated piping. Further information on the Dispersing Unit hardware may be found in Appendix M-E, Operating Manuals: Dispersing Unit.

Among the materials processed in the Dispersing Unit are solids

and liquids such as waste solvents and paint.

The Dispersing Unit is constructed primarily of carbon steel, and the dimensions of its components are shown in Figures M.8, M.9, and M.10. The unit is located in the Process Area at ~~SKW~~CHK as illustrated in Figure M.1.

M-2d(2) Dispersing Unit compliance with applicable hazardous waste treatment and storage standards

The major component of the Dispersing Unit is a tank in which hazardous waste and other materials are mixed, so 40 CFR 264 Subpart J standards for treatment and storage of hazardous waste in tanks apply to the Dispersing Unit. The Dispersing Unit's compliance with hazardous waste tank regulations is discussed below.

M-2d(2)(a) Description of Tank System: 270.16(a), (b), and (e), 264.192 (a)

The purpose of the following discussion is to describe the operation of the Dispersing Unit Tank at ~~SKW.~~CHK. A certified assessment of this tank by an independent, qualified, registered, professional engineer as required by 40 CFR 264.192(a) is presented in Appendix E-A, Tank System Assessments, of Section E,

Tank Systems. The tank system assessments include secondary containment calculations and certifications, compatibility statements, and tank assessment field notes. The Dispersing Unit Tank drawing is provided in Appendix E-B of Section E.

Piping and instrumentation diagrams, and process flow diagrams for the Dispersing Unit are presented in Section N, Air Emissions. Figure M-8 shows the dimensions of the Dispersing Unit Tank. The working capacity of the Dispersing Unit Tank, V-26, is 1,129 gallons.

The Dispersing Unit is located on top of a concrete secondary containment pad that is sloped to a collection area. This design ensures that the external shell of the tank and any external metal components of the tank system will not be in contact with soil or standing water; therefore, the requirements of 40 CFR 264.192 (a)(3) (corrosion expert assessment) are not applicable. As required by 40 CFR 264.193 (c)(4), any accumulated precipitation that gathers in the secondary containment system after a storm is removed within twenty-four (24) hours of detection, or in as timely a manner as possible.

M-2d(2)(b) Operational Practices: 270.16(c), (i), (j), 264.194, 264.198, 264.199, 264.195

The following information is supplied to meet the specific requirements of regulations promulgated under RCRA regarding tank operating practices.

M-2d(2)(b)(1) General Operating Requirements: 270.16(i), 264.194

Any material that could cause the Dispersing Unit Tank, or its ancillary equipment or secondary containment system to fail (i.e., rupture, leak, etc.) will not be designated for management in the Dispersing Unit tank system. Assessments for compatibilities of wastes with the Dispersing Unit tank system materials are presented in Appendix E-A of Section E, Tank Systems.

~~SKW~~CHK will use the appropriate controls and practices to prevent spills and overflows from the Dispersing Unit Tank. Spill prevention controls include check valves, dry disconnect couplings, and secondary containment around the unit. Overfill prevention controls include level sensing devices, high level alarms, automatic shutoff of the drum dumper, visual inspections

during transfer, and maintenance of adequate freeboard. The Dispersing Unit has a manual gauging port for overflow protection.

M-2d(2)(b)(2) Description of Feed Systems, Safety Cutoff, Bypass Systems, and Pressure Controls: 270.16 (c)

A description of the feed systems, safety cutoff, bypass systems, and pressure controls is provided below for the Dispersing Unit.

M-2d(2)(b)(2)(a) Feed Systems and Safety Cutoff

Level detection systems on the Dispersing Unit Tank are checked each operating day material transfer to or from this tank takes place. Check valves are present as needed within the system to prevent reversal of flow.

M-2d(2)(b)(2)(b) Pressure Controls

Pressure controls are not necessary for the Dispersing Unit tank since it is an atmospheric tank.

M-2d(2)(b)(3) Special Requirements for Handling Incompatible, Ignitable, or Reactive Waste: 270.16 (j), 264.198, 264.199

Wastes exhibiting the characteristic of reactivity will not be placed in the Dispersing Unit. The Dispersing Unit will comply with the requirements for the maintenance of protective distances between the waste management area and any adjoining property lines as outlined in the National Fire Protection Association (NFPA) "Flammable and Combustible Liquids Code". Smoking will not be permitted in the vicinity of the Dispersing Unit.

The procedures outlined in the Waste Analysis Plan (WAP), found in Section C, will be followed to ensure that no incompatible wastes or incompatible waste and materials are placed in the Dispersing Unit. Additionally, hazardous waste will not be placed in the unit if it previously held an incompatible waste or material unless compliance with 40 CFR 264.17(b) is demonstrated. Compliance with 40 CFR 264.17(b) will be documented as described in Section J, Closure Plan. More discussion on procedures for handling ignitable, incompatible, or reactive waste is contained in Section G, Procedures to Prevent Hazards.

M-2d(2)(b)(4) Inspections: 264.195

The inspection schedule for tank systems, including the Dispersing Unit tank system, is provided in Section F, Inspection Plan. ~~SKW~~CHK will document the results of these inspections in the operating record to be kept at the facility.

M-2d(2)(b)(5) Contingency Measures: 264.196

The procedures for responding to a situation where leaking or unfit-for-use tank systems are discovered is discussed in the Section H, Contingency/Emergency Plan. If a leak or spill occurs from the Dispersing Unit Tank then ~~SKW~~CHK will comply with the applicable requirements listed in 40 CFR 264.196.

M-2d(2)(c) Containment and Detection of Releases: 264.193, 270.16(g)

The secondary containment system for the Dispersing Unit Tank has been designed, installed, and is operated to prevent migration of wastes or accumulated liquid to the environment. The containment system provides for the detection of and collection of releases and accumulated liquids; accumulated liquids will be removed from containment systems within 24 hours or as soon as is practicable.

The secondary containment system for the Dispersing Unit Tank consists of a concrete slab surrounded with a concrete dike. The containment system for the Process Area is sloped toward the center to facilitate detection and removal of any potential released material or other liquid. Accumulated liquids will be removed and managed appropriately. The secondary containment system has been designed to have sufficient structural strength and thickness to minimize the potential of failure owing to pressure gradients, physical contact with waste, climatic conditions, or the stress of daily operations. Additionally, the foundations will provide resistance to pressure gradients above and below the system and will minimize the potential for failure due to settlement, compression, or uplift (see tank certifications presented in Appendix E-A of Section E, Tank Systems).

The Dispersing Unit containment area is coated with a sealant to protect against chemical attack of the concrete surface. The containment area has been designed to completely underlay the tank, and to cover surrounding earth most likely to come into contact with a release of waste (i.e., capable of preventing lateral and vertical migration).

The Dispersing Unit containment area is inspected each operating

day for the presence of liquids. Inspections will enable facility personnel to determine if failure of the tank or the containment structure has occurred. The Dispersing Unit Tank is elevated and is visually inspected for leaks.

Accumulated liquids collected in the secondary containment system will be removed within 24 hours or as soon as practical (e.g., by using vacuum truck, portable pump, etc.), and managed according to the procedures outlined in the Waste Analysis Plan in Section C, Waste Characterization.

Ancillary equipment (e.g., pumps) associated with the Dispersing Unit tank system has been located within the tank systems' secondary containment areas, within secondary containment areas for pumps, or within the containment area of an associated loading or unloading area. Therefore, sufficient secondary containment is provided for the ancillary equipment. All piping utilized for transfer of hazardous waste to and from the Dispersing Unit is above ground, welded, and inspected each operating day for leaks or damage.

Drawings that provide details for the secondary containment areas are provided in Section D, Use and Management of Containers, Appendix D-A. The secondary containment system for the Processing Area has been designed to provide sufficient capacity

to contain 100 percent of the capacity of the largest tank within its boundaries as well as enough containment volume to contain the amount of precipitation that would normally blow under the roof during a twenty-four hour, twenty-five year rainfall event. Also, each containment area has been designed and is operated in a manner to prevent run-on. The Dispersing Unit is located under a roof with attached walls that come partially to the ground to reduce precipitation ingress. The secondary containment capacity calculations for tanks in the Processing Area are provided in Appendix E-A of Section E, Tank Systems; the results of these calculations show the secondary containment capacity in the Processing Area is greater than required for the tanks in the area, including the Dispersing Unit Tank.

M-2d(3) Dispersing Unit compliance with standards for emissions or releases: 264.601 and 264.602 standards

M-2d(3)(a) Prevention of releases to the subsurface environment or groundwater: 264.601 (a)

Releases of waste from the Dispersing Unit to the subsurface or groundwater are extremely unlikely for these reasons.

(1) The Dispersing Unit is located in a secondary containment area which meets the requirements of 40 CFR 264 Subparts I and J. The containment has sufficient volume to contain a spill of the entire contents of the unit, and is coated with

a material that is compatible with the wastes processed in the unit. Secondary containment volume calculations are included in appendices of Section D, Use and Management of Containers, and Section E, Tank Systems.

(2) Various aspects of the condition of this unit and of the containment area are inspected each operating day or week, as described in Section F, Inspection Plan. Leaks or spills that might be associated with this unit are cleaned up within 24 hours of their discovery, or as soon as it is safe and practicable.

(3) The unit is located inside a large containment area, and is physically separated and removed from any direct contact with surface water, wetlands, or soil. The location of the facility relative to nearby bodies of water is shown in the topographic map in Section B, Facility Description.

(4) ~~SKW~~CHK maintains a Contingency/Emergency Plan for use in situations such as a major spill, a fire, or an explosion. This plan incorporates measures to mitigate releases to the environment, and to protect human health and the environment from such releases.

M-2d(3)(b) Prevention of releases to surface water, wetlands or soil: 264.601(b)

Releases of waste from the Dispersing Unit to surface water, wetlands, or soil are extremely unlikely for the reasons stated in M-2d(3)(a).

M-2d(3)(c) Prevention of releases to the air: 264.601(c)

The design and operation of the Dispersing Unit controls releases of waste constituents to the air from the unit to prevent releases which may adversely affect human health or the environment.

The wastes processed in the Dispersing Unit often contain organic solvents. These solvents could potentially volatilize while being mixed in the unit. The Dispersing Unit Tank is covered and can be closed to prevent release of volatile organic vapors when material is not being added or removed. A flexible seal closes the opening where the shaft for the mixing blade extends down into the tank. A second opening in the top of the tank through which the chute from the container dumper extends, can be closed by a knife-gate valve when material is not being added to the disperser tank.

The persons most likely to be exposed to potential air contaminants from this unit are ~~SKW~~CHK employees who work in the vicinity of the Dispersing Unit. The potential for contaminants reaching persons outside this area or outside the facility, if any such potential exists at all, is significantly reduced by the unit's emission controls. An exposure study was performed in August of 1991 at ~~SKW~~CHK to determine the potential for exposure of workers in the Processing Area (where the Dispersing Unit is located) to organic solvent vapors. The air in this area was monitored for six different organic compounds. Of these six compounds only three were detected, and they were detected in trace quantities that were well below the OSHA permissible exposure levels for unprotected workers. A summary of this study is contained in Appendix M-C, ~~Safety-Kleen~~Clean Harbors Air Monitoring Data.

M-2d(3)(d) Monitoring and Inspections: 264.602

The Dispersing Unit and the surrounding area will be visually inspected each operating day for evidence of leaks or spills in accordance with the facility inspection plan described in Section F, Inspection Plan. The secondary containment system will also be inspected each operating day for evidence of cracks or

breaches of containment in accordance with this inspection plan.

M-2e Drum Washing Unit

M-2e(1) Purpose

The Drum Washing Unit is used to wash residues from emptied containers. Some of these containers will not meet the criterion for empty containers stated in 40 CFR 261.7. The operation of the Drum Washing Unit is described below.

Containers which have had their contents removed are placed right side up on a conveyor which leads to the Drum Washing Unit. When the containers enter the unit they are lifted up and placed on their side, and then inverted. A chain then pulls the container to the first wash station where a wash wand extends up into the container and sprays washing fluid at high pressure to remove residues in the container. The wash fluid and residues drain out of the container into the wash fluid reservoir. The wash wand then retracts and the container is pulled by a chain to a second station where the washing process is repeated. The container is then pulled to a third station where a wand extends in to the container and it is washed again, this time with the container tipped slightly to allow the fluid to more completely drain out.

The container is then set upright by the unit and it is placed on a conveyor which carries it away from the washer.

Containers of various shapes and sizes are processed through the Drum Washing Unit. Most of the hazardous waste containers entering the washer meet the definition of empty as defined in 40 CFR 261.7 with the possible exception of those containers which held acutely hazardous waste. The Drum Washing Unit is designed to further empty all containers so they will, if they do not already, meet the definition of empty as defined in 40 CFR 261.7. Thus, after they have been washed in the Drum Washing Unit nearly all of the containers are exempt from hazardous waste regulations. The drums which are washed are typically either disposed of, reused, or reconditioned for reuse. Drums may be crushed before they are shipped off-site for disposal.

The Drum Washing Unit is constructed primarily of carbon steel and is located in the Processing Area at ~~SKW~~CHK as shown in Figure M.1 in Appendix M-A. Figure M.12, Triple Rinse - HRI (Drawing D990043, Triple Rinse - HRI; BRI, Inc.) shows the dimensions and the configuration of the unit.

M-2e(2) Drum Washing Unit compliance with standards for emissions or releases: 264.601 and 264.602

M-2e(2)(a) Prevention of releases to the subsurface environment or groundwater: 264.601 (a)

Releases of waste from the Drum Washing Unit to the subsurface or groundwater are extremely unlikely for these reasons.

(1) The Drum Washing Unit is located in a secondary containment area which meets the requirements of 40 CFR 264 Subparts I and J. The containment has sufficient volume to contain a spill of the entire contents of the unit, and is coated with a material that is compatible with the wastes processed in the unit. Secondary containment volume calculations are included in appendices of Section D, Use and Management of Containers, and Section E, Tank Systems.

(2) Various aspects of the condition of this unit and of the containment area are inspected each operating day or week, as described in Section F, Inspection Plan. Leaks or spills that might be associated with this unit are cleaned up within 24 hours of their discovery, or as soon as it is safe and practicable.

(3) The unit is located inside a large containment area, and is physically separated and removed from any surface water,

wetlands, or soil. The location of the facility relative to nearby bodies of water is shown in the topographic map in Section B, Facility Description.

(4) ~~SKW~~CHK maintains a Contingency/Emergency Plan for use in situations such as a major spill, a fire, or an explosion. This plan incorporates measures to mitigate releases to the environment, and to protect human health and the environment from such releases.

M-2e(2)(b) Prevention of releases to surface water, wetlands or soil: 264.601(b)

Releases of waste from the Drum Washing Unit to surface water, wetlands, or soil are extremely unlikely for the reasons stated in M-2e(2)(a).

M-2e(2)(c) Prevention of releases to the air: 264.601(c)

The design and operation of the Drum Washer Unit controls releases of waste constituents to the air from the unit to prevent releases which may adversely affect human health or the environment. The containers processed in the Drum Washing Unit have been processed to remove the bulk of the waste they contained. Thus, the containers have only small quantities of waste remaining in them that can volatilize into the air.

Furthermore, the washing apparatus is enclosed except for openings on either end for the containers to enter and exit. Also, the washing solvent used is typically diesel which is relatively non-volatile and therefore is unlikely to emit significant quantities of vapors. ~~SKW~~CHK is investigating methods to further reduce the potential for releases of airborne contaminants from the washer.

The persons most likely to be exposed to potential air contaminants from this unit are ~~SKW~~CHK employees who work in the vicinity of the Drum Washing Unit (i.e., in the Processing Area). The potential for contaminants reaching persons outside this area or outside the facility, if any such potential exists at all, is much lower.

M-2e(2)(d) Monitoring and Inspections: 264.602

The Drum Washing Unit and the surrounding area will be visually inspected each operating day for evidence of leaks or spills in accordance with the facility inspection plan described in Section F, Inspection Plan. The secondary containment system will also be inspected each operating day for evidence of cracks or breaches of containment in accordance with this inspection plan.

M-3 Hydrologic, Geologic, and Meteorologic Assessments

Appendix M-F, Draft Preliminary Assessment Report for ~~SKW~~CHK contains a preliminary meteorologic, hydrologic and geologic assessment of the site. This assessment was part of a draft preliminary assessment report done as part of a RCRA facility assessment at ~~SKW.~~CHK. Additional information on the meteorological conditions of the site is located in Section B, Facility Description.

Detailed hydrologic, geologic, and meteorologic assessments of the site are not appropriate for the types of miscellaneous units at ~~SKW.~~CHK. Furthermore, these miscellaneous units have been designed, constructed, and are operated in a manner to protect human health and the environment by controlling potential releases. In particular, these units are operated in such a manner to prevent releases that might have adverse effects on human health or the environment due to migration of waste constituents in ground water, the subsurface environment, surface water, wetlands, soil surface, or the air as detailed in section M-2 of this application.

M-4 Potential Pathways for Exposure

M-4a Shredder and Granulator Units - these units were closed in August, 1998.

M-4b Drum Scraper Unit

The primary potential pathway for exposure of humans or environmental receptors to hazardous constituents from the Drum Scraper Unit is exposure to vapors released to the air during the period that the drums of hazardous waste are open before and after they are processed in the Drum Scraper Unit, and to vapors released from the container while it is being processed in this unit. The amount of vapors released during the first case is very small since the drums are open for only a short period before and after they are processed in the unit. The amount of organic vapors released during the second case is also very small since the cylinder sleeve that extends into the container fits snugly enough, although it does not make an airtight seal, to keep most of the vapors from escaping. Because of the small quantity of vapors released, the only potential receptors would be facility employees who might be working next to the unit. These employees wear protective equipment and clothing to prevent them from being exposed to vapors that may be present at

hazardous levels. A study was performed in August of 1991 at ~~SKW~~CHK to determine the potential for exposure of workers in the Processing Area (where the Drum Scraper Unit is located) to organic solvent vapors. The air in this area was monitored for six different organic compounds. Of these six compounds only three were detected, and they were detected in trace quantities that were well below the Occupational Safety and Health Administration (OSHA) permissible exposure levels for unprotected workers. A summary of the results of this study is contained in Appendix M-C. The emission controls discussed above prevent the exposure of receptors outside the process area to significant amounts of hazardous constituents.

The Drum Scraper Unit has been located within secondary containment to significantly reduce the possibility of any migration of hazardous waste or constituents into the ground or to surface waters.

M-4d Dispersing Unit

The primary potential pathway for exposure of humans or environmental receptors to hazardous constituents from the Dispersing Unit is exposure of facility employees working in the vicinity of the unit to organic vapors and other airborne

contaminants released from the blending of materials in the unit. The potential for significant exposure is small since the Dispersing Unit Tank is covered and closed when materials are not being added or removed. Contaminant levels emitted to the air are very small, and do not present a potential for exposure to receptors outside the area of the unit. Data from air contaminant monitoring in the Processing Area is discussed in section M-2, and a summary of these data is presented in Appendix M-C, SK Air Monitoring Data. PPE is utilized by employees operating this unit to prevent potential exposure to hazardous emissions. The emission controls discussed above prevent the exposure of receptors outside the process area to significant amounts of hazardous constituents.

The Dispersing Unit has been located within secondary containment to significantly reduce the possibility of any migration of hazardous waste or constituents into the ground or to surface waters.

M-4e Drum Washing Unit

The primary potential pathway for exposure of humans or environmental receptors to hazardous emissions from the Drum Washing Unit is through exposure of facility employees to

washing solvent vapors released during the washing operation. The potential for exposure to these vapors is small because the washing solvent (usually diesel) is not prone to vaporize and the washing operation is enclosed except for openings on either end of the unit for containers to enter and exit. The Drum Washing Unit is automated, which minimizes the need for an operator to stand next to the unit where the potential for exposure would be greatest. Workers in this area wear protective equipment and clothing to prevent potential exposure to hazardous emissions. The emissions controls discussed above prevent the exposure of receptors outside the Process Area to significant amounts of hazardous constituents.

The Drum Washing Unit has been located within secondary containment to significantly reduce the possibility of any migration of hazardous waste or constituents into the ground or to surface waters.

M-5 Effectiveness of Treatment

M-5a Shredder and Granulator Units - these units were closed in August, 1998

M-5b Drum Scraper Unit

The Drum Scraper Unit is able to mobilize solidified, non-dumpable waste within a drum to the extent that the majority of the waste can be dumped out of the drum by turning it upside down.

The technology used by the Drum Scraper Unit is established and in use in many industries. No reports on demonstrations of the effectiveness of the same or a similar treatment technology gathered under a RCRA research and development permit have been located.

M-5d Dispersing Unit

The Dispersing Unit is capable of mixing solid and liquid materials to form a pumpable liquid, with particulates generally no larger than one quarter of an inch in diameter, which is suitable as fuel for cement kilns.

The technology used in the Dispersing Unit is ordinary mixing and fluid transfer technology in common use throughout industry. No reports on demonstrations of the effectiveness of the same or a

similar treatment gathered under a RCRA research and development permit are available.

M-5e Drum Washing Unit

The Drum Washing Unit is able to clean containers containing residues of waste to the extent that they meet the definition of empty as defined in 40 CFR 261.7, including containers which held acutely hazardous waste.

The technology used by the Drum Washing Unit is established container and liquid cleaning and handling technology. No reports on demonstrations of the effectiveness of the same or a similar treatment gathered under a RCRA research and development permit have been located.

M-6 Special Requirements for Handling Ignitable, Reactive and Incompatible Wastes

~~Safety-Kleen (Wichita), Inc.~~Clean Harbors Kansas, LLC has developed special provisions for ignitable, reactive, or incompatible wastes applicable to management of waste in containers and tanks. These provisions will be followed during processing of the waste in other regulated units as required

under 40 CFR 264.17(c). These procedures are addressed in Section D, Container Management (Sections D-3f and D-3g), Section E, Tank Systems (Section E-3c), and in Section G, Procedures to Prevent Hazards (Section G-6). Additional information regarding precautions, equipment, and safety features used to prevent accidental ignition or explosion is presented in Section G, Procedures to Prevent Hazards.

APPENDIX M-A

SECTION M FIGURES M.2 Through M.12

Figure Description	Corresponding Drawing Number
M.5. 55 Gallon Drum Scraper	Drawing D-35-52-800
M.6. Motor Location and Specifications	Drawing D-43-10-6-100 (HRI, Inc.)
M.8. 1129 Gallon Dispersing Tank	Drawing PD 12/3/91
M.9. 40/50/60 VSM 18 Disperser	Drawing DL34055 (FCF-Bowers)
M.10. Barrel Dump Assembly	Drawing PD 1/25/91
M.11. P&ID Process Areas	Drawing 665300-4-W404F (FD)
M.12. Triple Rinse, HRI	Drawing D990043 (BRI, Inc.)

APPENDIX M-B

OPERATING MANUALS: SHREDDER AND GRANULATOR UNITS

Closed August, 1998

APPENDIX M-C

~~SKW~~CHK AIR MONITORING DATA

APPENDIX M-E

OPERATING MANUALS: DISPERSING UNIT

APPENDIX M-F

DRAFT PRELIMINARY ASSESSMENT REPORT FOR ~~SKW~~CHK

August 14, 1998
Revision No. 9

Table of Contents

List of Attachments ..... Page ii

N-1 Air Emission Standards for Process Vents ..... Page 1
N-1a Applicability ..... Page 1

N-2 Air Emissions Standards for Equipment Leaks ..... Page 2
N-2a Applicability ..... Page 2
N-2b Pumps in Light Liquid Service ..... Page 3
N-2c Compressors ..... Page 4
N-2d Pressure Relief Devices ..... Page 5
N-2e Sampling Connection Systems ..... Page 5
N-2f Open-ended Valves or Lines ..... Page 5
N-2g Valves in Gas/Vapor Service or in Light Liquid Service ..... Page 6
N-2h Pumps & Valves in Heavy Liquid Service; Flanges, and Other Connectors ..... Page 8

N-3 Delay of Repair ..... Page 9
N-3a Valves: ..... Page 9
N-3b Pumps: ..... Page 10

N-4 Alternative Standards - Valves in Gas/Vapor Service or Light Liquid Service: ..... Page 11
N-4a Percentage of Valves Allowed to Leak ..... Page 11
N-4b Skip Period Leak Detection and Repair ..... Page 12

N-5 Test Methods and Procedures ..... Page 13
N-5a Testing for No Detectable Emissions ..... Page 13
N-5b Testing Organic Concentration ..... Page 14

N-6 Recordkeeping Requirements ..... Page 16
N-6a Equipment Information ..... Page 16
N-6b Method Of Compliance ..... Page 18
N-6c Control Devices ..... Page 18
N-6d Leak Identification ..... Page 19
N-6e Equipment List ..... Page 21
N-6f No Detectable Emission Equipment ..... Page 21
N-6g Pressure Relief and Vacuum Equipment ..... Page 21
N-6h Difficult to Monitor Valves ..... Page 22
N-6i Process Information for Exemptions ..... Page 22
N-6j Operating Information ..... Page 23
N-6k Additional Fugitive Emission Requirements ..... Page 23

List of Attachments

Appendix N-A - Facility and Process Drawings
Appendix N-B - Regional Administrator Letter
Appendix N-C - Monitoring Method and Equipment Documentation
Appendix N-D - Equipment Lists
Appendix N-E - Equipment Designated As No Detectable Emissions
Appendix N-F - Monitoring Results and Repair Reports

N-1 Air Emission Standards for Process Vents

N-1a Applicability

The ~~Safety-Kleen (Wichita), Inc. (SKW)~~Clean Harbors Kansas, LLC(CHK) facility stores, treats, and recovers for recycling hazardous waste and hazardous waste fuel. (For a more complete description of hazardous waste management activities at ~~SKW,~~CHK, refer to Section B, Facility Description.) The hazardous waste management units at ~~SKW~~CHK are subject to the 40 CFR Part 270 permitting requirements by 265.1 (b) and 266.34(c) and are allowed to operate under 270.10 (e) according to interim status standards until a permit is issued. However, there are no regulated units currently operated at the ~~SKW~~CHK facility subject to the 40 CFR 264 Subpart AA process vent emissions standards.

N-2 Air Emissions Standards for Equipment Leaks

N-2a Applicability

The ~~SKW~~CHK facility stores, treats and recovers for recycling hazardous waste and hazardous waste fuel. The waste lines and equipment are used at ~~SKW~~CHK to transfer hazardous waste liquids between or from waste storage tanks, or miscellaneous exempt units, or from or to trucks for off site receipt or shipment. It is assumed, based on knowledge of process, that the hazardous waste liquids or gases handled in these lines at the facility potentially contact hazardous waste in excess of ten (10) percent total organic carbon (TOC) and are therefore subject to these standards. Appendix N-A, Facility and Process Drawings, contains diagrams of the pertinent equipment and piping in use at ~~SKW.~~CHK.

A majority of the equipment at the ~~SKW~~CHK facility is potentially in ten (10) percent, or greater, TOC hazardous waste liquid or gas service except for water, air, or fire suppressant lines. These lines are identified separately from all other lines by their color or labelling.

N-2b Pumps in Light Liquid Service

All pumps at the ~~SKW~~CHK facility are assumed to be in light liquid service at some time due to the varied nature of the wastes managed at the facility. Because the exact composition of the waste stream varies, a heavy liquid service designation is difficult to sustain during actual operations. Therefore, all pumps at the facility are potentially subject to light liquid service standards and will be monitored monthly to detect leaks using the method specified in 264.1063 (b) unless exempted by a classification of no detectable emissions.

All pumps at the facility are subject to regular RCRA inspections, as described in Section F, Inspection Plan. These will occur at a minimum of once per week to locate indications of liquids dripping from pump seals. If there are indications that liquids are dripping from the pump seal (e.g., staining of surrounding substrate, visible liquids), a leak is considered to be detected.

When a leak is detected, a first attempt at repair shall be made within five (5) calendar days and a permanent repair attempted

within fifteen (15) calendar days of detection unless the standards of 264.1059 are met.

There are currently no pumps in operation at the ~~SKW~~CHK facility with a dual mechanical seal that includes a barrier fluid. When these types of pumps are installed, ~~SKW~~CHK will comply with the requirements of 40 CFR 264.1052 (d) if these pumps are to be exempted from monitoring requirements.

There are several pumps at the ~~SKW~~CHK facility which are eligible for the "no detectable emissions" exemption from 264.1052 (a), (b), and (d) with an instrument reading of 500 ppm or less above background. These pumps have no externally actuated shaft which penetrates the pump housing, and operate with no detectable emissions (i.e., less than 500 ppm measured by the method specified in 264.1063 (c)) and have been initially tested for compliance with this standard and will be tested annually for leaks above 500 ppm. Pumps which are eligible for the "no detectable emissions" exemption will be tested when requested by the Regional Administrator, as specified in 40 CFR 264.1052(e)(3).

N-2c Compressors

There are no compressor units subject to air emission standards at the ~~SKW~~CHK facility.

N-2d Pressure Relief Devices

There are no pressure relief devices installed on equipment subject to the 40 CFR Subpart BB regulations currently being operated in hazardous waste gas/vapor or liquid service at ~~SKW.~~CHK.

N-2e Sampling Connection Systems

All sampling systems at the ~~SKW~~CHK facility are of the *in situ* type, are used in-line, and are not subject to subparagraphs (a) and (b) of 264.1055. These systems typically consist of a valve with an open ended line. This equipment is subject to the leak emissions standards and is included in the monitoring plan as required by 264.1056 or 264.1057. This system is operated in method consistent with the basis for the standards contained in 264.1055 (a) and (b) in that any purged waste prior to sampling is returned to the process.

N-2f Open-ended Valves or Lines

All open-ended valves and lines at the ~~SKW~~CHK facility are equipped with caps or plugs intended to seal the open end when the line or valve is not in service. All double block lines at the facility (i.e., lines with two valves) are operated such that the valve on

the hazardous waste stream side is closed before the second valve is closed.

N-2g Valves in Gas/Vapor Service or in Light Liquid Service

All valves at the ~~SKW~~CHK facility are assumed to be in ten (10) percent or greater organic content light liquid gas/vapor service at some time due to the varied nature of the wastes managed at the facility. Because the exact composition of the waste streams varies, a heavy liquid service designation is difficult to sustain during actual operations. Therefore all valves at the facility are potentially subject to light liquid service requirements and will be treated as being in light liquid service for the purpose of complying with the air emission regulations. This designation assures that ~~SKW~~CHK complies with the requirements of 264.1063 (g).

Valves will be monitored monthly to detect leaks using the method specified in 264.1063 (b) unless exempted according to 264.1061 or according to 264.1057 (f), (g), or (h). If an instrument reading in excess of 10,000 ppm is measured during monitoring, a leak subject to the repair provisions of this program is detected.

When a leak is detected, a first attempt at repair shall be made within five (5) days and a permanent repair attempted within fifteen (15) calendar days of detection unless the standards of 264.1059 are met. First attempts at repair shall include tightening of bonnet bolts, replacement of bonnet bolts, tightening of packing gland nuts, and/or injection of lubricant into lubricated packings.

There are no valves in use at the ~~SKW~~CHK facility eligible for the no detectable emission exemption. Similarly, there are no valves designated as unsafe-to-monitor.

There are numerous valves designated as difficult-to-monitor pursuant to this paragraph on the existing units which were in operation prior to June 21, 1990. These valves have been determined to be difficult to monitor due to their location or elevation as specified in 264.1064 (h) (2). All valves currently designated as difficult-to-monitor are so designated in the log because of their location at or above two meters above a supported surface. Valves that have been identified as difficult-to-monitor are identified in the tables in Appendix N-D by the identification number P-XXXU/PXXXU or M-XXXU/MXXXU. These valves will be monitored according to this written plan for obtaining access to these valves for monitoring at a minimum of

once per year.

N-2h Pumps & Valves in Heavy Liquid Service; Flanges, and Other Connectors

There are no pumps or valves designated in heavy liquid service at the ~~SKW~~CHK facility. Flanges and other connectors shall be monitored within five (5) calendar days by the method specified in 264.1063 (b) if evidence of a potential leak is found by visual, audible, olfactory, or other method. These potential leaks will normally be initially identified by observation of dripping or accumulated liquids or of stained substrate during scheduled inspections of the tank system and associated piping.

When a leak is detected, a first attempt at repair shall be made within five (5) calendar days and a permanent repair attempted within fifteen (15) calendar days of detection unless the standards of 264.1059 are met.

The practices specified in paragraph 264.1057 (e) shall constitute a first attempt at repair.

N-3 Delay of Repair

In the event that any repair of a connection, pump, or valve associated with a process unit must be delayed beyond fifteen (15) calendar days because it requires the shutdown of the hazardous waste management unit, that repair shall be completed during the next unit shutdown.

A delay of any other repair of a connection, pump, or valve will extend beyond the (15) days only if the equipment for which a leak has been detected can be isolated from the system and no longer contacts hazardous waste liquid or gas/vapor in concentrations exceeding ten (10) percent by weight.

N-3a Valves:

In delaying a repair of a valve beyond fifteen (15) calendar days, ~~SKW~~CHK will follow procedures as specified by 40 CFR 1059. ~~SKW~~CHK will determine whether or not the emissions from an immediate repair would exceed those likely to result from the procedures that would be used if repair could be delayed. Delay of repair will only occur when the emissions would be reduced by the delay, when the equipment is isolated from the hazardous

waste management unit, or when the repair is technically infeasible without a hazardous waste management unit shutdown (in this case, the repair shall occur before the end of the next hazardous waste management unit shutdown). Delay of repair of a valve beyond the next hazardous waste management unit shutdown will only occur if valve assembly replacement is necessary during the shutdown, valve assembly supplies have been depleted, and valve assembly supplies had been sufficiently stocked before supplies were depleted. Delay of repair beyond the next hazardous waste management unit shutdown will only occur if the next hazardous waste management unit shutdown occurs sooner than six months after the first hazardous waste management unit shutdown.

~~SKW~~CHK will comply with 40 CFR 264.1059 when repair of a valve is delayed. If delay of repair is performed in accordance with 40 CFR 264.1059(c)(2), the purged material collected during the repair will be destroyed or recovered in a control device complying with 40 CFR 264.1060, and to 40 CFR 1033.(h), 1033(i), and/or 1033(j).

Repairs of valves may be delayed at ~~SKW~~CHK beyond the first unit shutdown in the event that the repair requires spare parts which were well stocked prior to the shutdown but were depleted and unavailable at the time of shutdown. Additional delays beyond the second unit shutdown will only occur if the second shutdown occurs within six (6) months after the first.

N-3b Pumps:

Repairs of pumps will be delayed by ~~SKW~~CHK beyond fifteen (15) calendar days if the repair requires the use of a dual mechanical seal and barrier fluid system. Such delayed repairs of pumps will be completed as soon as practicable but no later than six (6) months from the time the leak was detected.

N-4 Alternative Standards - Valves in Gas/Vapor Service or Light Liquid Service:

N-4a Percentage of Valves Allowed to Leak

All valves at the ~~SKW~~CHK facility in light liquid or gas service are identified on the attached drawings, are associated with hazardous waste management units, are subject to 264.1057, and are eligible for this alternative standard. ~~SKW~~CHK elects to meet the two (2) percent standard for valves by meeting the following requirements of 264.1061 (b) (1) - (3).

A copy of the letter notifying the Regional Administrator of ~~SKW's~~CHK's implementation of this alternative standard is included in Appendix N-B.

A performance test using the method specified in 264.1063 (b) was performed on all identified valves at the facility on December 17, 1990. No leaks greater than 10,000 ppm were detected in any valves. This test shall be repeated annually and at the request of the Regional Administrator.

Future annual performance tests shall detect a leak if readings exceed 10,000 ppm. If a leak is detected, it will be repaired in

accordance with 264.1057 (d) and (e).

Future annual performance tests shall calculate the percentage leak rate by dividing the number of valves with readings in excess of 10,000 ppm by the total number of valves eligible. The initial performance test conducted in December 1990 did not detect any leaking valves. The resulting leak rate for the initial performance test of zero (0) percent meets the two (2) percent standard.

Should ~~SKW~~CHK decide to discontinue meeting this alternative standard, the Regional Administrator will be notified.

N-4b Skip Period Leak Detection and Repair

~~SKW~~CHK does not elect to meet this alternative standard for valves in the regulated service at this time. Should ~~SKW~~CHK elect to meet this alternative standard in the future, the Regional Administrator shall be notified and the program revised to comply with 264.1062 (b).

N-5 Test Methods and Procedures

The test methods used by ~~SKW~~CHK comply with 264.1063. Relevant instrument and method information is included in this document as Appendix N-C.

Monitoring performed at ~~SKW~~CHK is done in accordance with Method 21 as set forth in 40 CFR Part 60.

The instrument currently being used for monitoring is a Foxboro OVA Model 108; other instruments may be utilized depending on performance and instrument availability. The performance criteria for this instrument against Method 21 requirements are well documented and are included in Appendix N-C. The instrument is calibrated according to Method 21 requirements and the results documented as part of the monitoring. Examples of calibration forms for documenting this information appear in Appendix N-C. Calibration gases conform to Method 21 requirements and are documented with each calibration (see Appendix N-C). Future monitoring procedures, monitoring equipment, and calibration of that equipment shall comply with 40 CFR 264.1063.

N-5a Testing for No Detectable Emissions

The only equipment at ~~SKW~~CHK designated as meeting the "no

detectable emission" standard are pumps meeting the criteria of 264.1052 (e). These pumps will be monitored annually following the procedures of 264.1052 (b). The background levels will be recorded as set forth in Method 21 in determining the leakage rates from these pumps.

When monitoring for leaks, the instrument probe is traversed around all potential leak sources from these pumps as close to the interface as possible as described in Method 21.

The background value shall be subtracted from the highest reading on each pump in determining compliance with the 500 ppm level for no detectable leakage.

N-5b Testing Organic Concentration

All identified hazardous waste equipment in waste service contacts ten (10) percent or greater liquid wastes. ~~SKW~~CHK has made this determination based on knowledge of the waste streams handled by ~~SKW~~CHK and complies with 264.1063 (g). Additional testing using methods stipulated by paragraphs 264.1063 (d) (1) and (2) for this initial designation is not required at ~~SKW~~CHK Since all identified hazardous waste equipment has been designated as being in light liquid, ten (10) percent or greater

organic liquid waste service, documentation of this determination based on knowledge of process is not required.

Should ~~SKW~~CHK determine that a system can be designated as contacting less than ten (10) percent organic concentration streams, or the Regional Administrator does not agree that a stream contains less than ten (10) percent by weight organics, the determination will only be revised after following the procedures in 264.1063 (d) (1) or (2).

Any samples used to determine the percent organic content shall be representative of the highest total organic content hazardous waste that is expected to be handled in or contact the equipment.

Since all equipment at the ~~SKW~~CHK facility has been designated in light liquid service, no waste constituent vapor pressure determinations are necessary.

No control device efficiency tests are performed at the ~~SKW~~CHK facility since emissions reductions using control devices are not required by 264.1034.

N-6 Recordkeeping Requirements

~~SKW~~CHK is subject to the leak detection and repair requirements only and has no closed vent or control devices. The recordkeeping provisions of this paragraph for the Subpart BB program only apply to ~~SKW. Although SKW~~CHK. Although CHK is owned by ~~Safety-Kleen~~Clean Harbors and is part of a multiple facility system subject to these standards, ~~SKW~~CHK elects to maintain the required records on site. Additional information on this program for ~~SKW~~CHK may also be maintained at ~~Safety-Kleen's~~Clean Harbors corporate office in ~~Columbia, South Carolina.~~Braintree Massachusetts.

N-6a Equipment Information

The identification numbers for equipment subject to leak detection and repair requirements and associated hazardous waste management units appear in the Tables in Appendix N-D. The numbers separate the equipment into two categories. Valves and connections are identified with PXXX number, pumps are identified by a MXXX number. These numbers are unique to each piece of equipment.

Drawings of the process and facility plot plan are included in Appendix N-A. These drawings also show each piece of equipment

subject to these standards and their identification numbers. The exact location of each piece of equipment is identified for monitoring and repair tracking from this information.

The tables in Appendix N-D include equipment descriptions, types, models, serial numbers, and operating characteristics where available.

Hazardous waste streams handled at the ~~SKW~~CHK facility have been assumed to exceed the ten (10) percent organic content limit and a majority are liquids. The gas/vapor service equipment is identified by type of associated process. This service is limited to equipment on condensers and vent lines, and is identified in the tables included in Appendix N-D. All pipelines subject to these standards are identified as being in either vapor or liquid service in the pipe line lists in Appendix N-D. Light liquid services are identified by the identification number for the pipeline in which the equipment is installed. K-XXX represents a kiln fuel service, N-XXX represents a non-chlorinated organics service, C-XXX represents a chlorinated organics service, W-XXX represents an aqueous organics service, and O-XXX represents waste oil service.

Each piece of equipment subject to 40 CFR Subpart BB standards is marked in such a manner that it can be distinguished readily from other pieces of equipment. Markings include identification tags and/or color coding as appropriate.

N-6b Method Of Compliance

Pumps are monitored monthly in accordance with 264.1052 (a), (b), and (c); except for those pumps listed in Appendix N-E. Those pumps are tested for compliance with no detectable emissions standards annually.

Valves are tested annually for leaks in accordance with 264.1061, (standards allowing no greater than two (2) percent of the valves to leak); except for those valves which are designated as difficult to monitor. These valves are monitored for leaks annually.

Flanges and other connectors are inspected weekly and monitored if evidence of a leak is found.

All open-ended valves and lines at the ~~SKW~~CHK facility are equipped with caps or plugs intended to seal the open end when the line or valve is not in service. All double block lines at the facility are operated such that the valve on the hazardous waste stream side is closed before the second valve is closed.

N-6c Control Devices

No control devices are required on the units at the ~~SKW~~CHK

facility, so no implementation schedule for their installation, their design, or performance test plans have been prepared.

N-6d Leak Identification

Whenever a leak is detected on any equipment, a weatherproof tag shall be attached showing the equipment identification number, the date a potential leak was visually identified, the date a leak was detected in accordance with 264.1058 (a). This equipment identification tag will be removed after repair except for valves.

The equipment identification tag will remain on repaired valves until two (2) successive months of monitoring indicate that the leak has been repaired by measurements less than 10,000 ppm.

When a leak has been detected by exceeding a 10,000 ppm measurement, information on the leak and its repair will be documented and made part of the operating record. An example of the leak reports and repair records are included in Appendix N-F. This information shall include the following.

- The instrument and operator and the leaking equipment identification number.

- The date a potential leak was identified.

- The date a leak was detected by exceeding 10,000 ppm on the instrument and the date of each attempted repair.

- The repair method applied with each attempt to repair the leak.

- The monitoring results following each repair attempt and the indication of "greater than 10,000 ppm" if the reading is above 10,000 ppm.

- The notation "Repair Delayed" if repairs are delayed past fifteen (15) days.

- Documentation of the repair delay in accordance with 264.1059 (c).

- The signature of the owner or operator whose decision it is to delay the repair due to the need for a hazardous waste management unit shutdown.

- The expected date of successful repair of the leak if it is not repaired within fifteen (15) days.

. The date of successful repair.

N-6e Equipment List

The list of equipment subject to the requirements of 264.1052 through 264.1060 appears in the tables in Appendix N-D.

N-6f No Detectable Emission Equipment

A list of equipment designated by ~~SKW~~CHK as meeting the no detectable emissions standards for pumps from 264.1052 (e) appears in Appendix N-E along with a statement signed by ~~Safety-Kleen's~~Clean Harbors designee at the ~~SKW~~CHK facility.

The dates of the compliance tests, the background value, and the highest value measured for each pump designated according to 264.1052 (e) and identified according to paragraph (g) (2) (i) of this section appears in Appendix N-F along with all field records of the monthly monitoring performed on all regulated equipment at the ~~SKW~~CHK facility.

N-6g Pressure Relief and Vacuum Equipment

There are no pressure relief devices at the ~~SKW~~CHK facility

subject to this requirement.

N-6h Difficult to Monitor Valves

Valves that have been identified as difficult to monitor are identified in the tables in Appendix N-D by the identification number P-XXXU/PXXXU or M-XXXU/MXXXU. ~~SKW~~CHK does not elect to identify any equipment as unsafe-to-monitor at this time. The difficult-to-monitor valves identified pursuant to 264.1057 (h) listed in the tables in Appendix N-D are all located at or above two (2) meters above a supported surface. The valves will be monitored annually when a portable structure capable of safely supporting monitoring personnel can be scheduled.

N-6i Process Information for Exemptions

Information is available in the facility records which indicates the design capacity of the hazardous waste management units.

The facility operating record includes information on the influent and effluent of each hazardous waste management unit subject to these requirements.

No hazardous waste management unit exclusively handles heavy liquids and all equipment is covered by sections of the requirements which apply to light liquids. All identified hazardous waste equipment in waste service contacts waste with ten (10) percent or greater organics. ~~SKW~~CHK has made this determination based on knowledge of the waste streams. No exemptions are currently being claimed on the basis of weight percent organics in the waste stream or type of liquid service (heavy or light). This information constitutes the supporting information on the applicability of these requirements at the ~~SKW~~CHK facility and will be updated on a regular basis.

N-6j Operating Information

The records required by 264.1064 (d) and (e) will be maintained on site for a period of three years.

N-6k Additional Fugitive Emission Requirements

~~SKW~~CHK is not subject to the additional requirements from 40 CFR

Part 60, subpart VV; or Part 61, subpart V; and therefore cannot document compliance with this section using duplicative information.

Appendix N-A - Facility and Process Drawings

Drawing Number	Sheet	Subject
665300-4-W401	1 of 9	Legend & Symbology
665300-4-W404B	3 of 9	Sparging Room I - Round Spargers System
665300-4-W404C	4 of 9	Sparging Room II - Rectang. Spargers System
665300-4-W404D	5 of 9	Storage Tank Room I/V-9 Thru V-14
665300-4-W404E	6 of 9	Storage Tank Room II/V-15 A-D & V-16
665300-4-W404F	7 of 9	Process Areas /V-17, P11 & P-5 Pump Details
665300-4-W404G	8 of 9	Tank Farm I/V-1, V-2, V-3 & V-4
665300-4-W404H	9 of 9	Tank Farm II/V-5 Thru V-8/N & S Manifolds
665300-4-W050	1 of 1	Piping Plot Plan
665300-4-W510-1	1 of 2	Piping Transposition - Process Area
665300-4-W510-2	2 of 2	Piping Transposition - Process Area
665300-4-W511-1	1 of 2	Piping Transposition - Tank Farm
665300-4-W511-2	2 of 2	Piping Transposition - Tank Farm
665300-4-W512	1 of 1	Piping Transpositon - Storage Tank Room
665300-4-W513	1 of 1	Piping Transpositon - Sparger Room
665300-4-W514	1 of 1	Piping Transpositon - Solids Process Area

Appendix N-B - Regional Administrator Letter

Appendix N-C - Monitoring Method and Equipment Documentation

Appendix N-D - Equipment Lists

Appendix N-D.1 - Piping Component Data Sheets

Appendix N-D.2 - Piping Line List

Appendix N-D.3 - Equipment Data Sheets

Appendix N-D.4 - Location of Equipment Monitoring Points

Appendix N-D.1 - Piping Component Data Sheets

Appendix N-D.2 - Piping Line List

Appendix N-D.3 - Equipment Data Sheets

Appendix N-D.4 - Location of Equipment Monitoring Points

Appendix N-E - Equipment Designated As No Detectable Emissions

Appendix N-F - Monitoring Results and Repair Reports

Table of Contents

Y-1 Introduction:.....Page 1

List of Appendices

Appendix Y-1, Site Drawings
Appendix Y-2, Building Drawings
Appendix Y-3, Unit Drawings

List of Acronyms

~~Safety-Kleen (Wichita), Inc.~~Clean Harbors Kansas, LLC (SKW)

Y-1 Introduction:

This section, Referenced Drawings, of the ~~Safety-Kleen (Wichita), Inc.,~~ Clean Harbors Kansas, LLC, RCRA permit application is provided to facilitate location of information regarding site layout, equipment, and processing unit information. Reduced versions of these drawings are included as figures within the text or appendices of the application where applicable. Lists of referenced drawings and original size drawings are presented in Appendix Y-1, Site Drawings; Appendix Y-2, Building Drawings; and Appendix Y-3, Unit Drawings.

Appendix Y-1. Site Drawings

Drawing Number	Drawing Title	Corresponding Figure Number						
Drawing 50-01-01-001	Site Location Map	B.1						
Drawing 50-01-11-001	Facility Map	B.2						
Drawing 50-01-01-002	Facility Layout	B.3			G.1			
Drawing 50-01-10-001	Hazardous Waste Management Areas	B.4	D.1	E.1				
Drawing 50-00-01-001	Annual Surface Wind Rose	B.5						
Drawing 50-01-10-002	Material Containment Areas		D.2			J.1		
Drawing 50-01-03-002	Emergency Equipment/Evacuation Routes				H.1			
Drawing 50-55-10-002	Tank Locations			E.2		J.2		
Drawing 50-01-10-003	Solid Waste Management Unit - Area West of Building B						L.1	
Drawing 50-57-10-001	Miscellaneous Unit Locations					J.3		M.1

Appendix Y-2. Building Drawings

Drawing Number	Drawing Title	Corresponding Figure/Appendix Number
Drawing 50-14-10-001	Building B	Figure D.7 in Appendix D-A
Drawing 50-15-10-001	Building C	Figure D.5 in Appendix D-A
Drawing 50-15-10-002	Drum Dock	Figure D.6 in Appendix D-A
Drawing 50-16-10-001	Building D	Figure D.3 in Appendix D-A
Drawing 50-17-10-001	Building I	Figure D.8 in Appendix D-A
Drawing 50-18-10-001	Building J	Figure D.9 in Appendix D-A
Drawing 50-55-10-001	Processing Area	Figure D.4 in Appendix D-A

Appendix Y-3. Unit Drawings

Drawing Number	Drawing Title	Corresponding Figure/Appendix Number
Drawing 665300-4-W404A (FD)	P&ID New Process/Condensate Separator[1]	Figure M.2 in Appendix M-A
Drawing (As built)	Shredder/Granulator[1]	Figure M.3 in Appendix M-A
Drawing 50-57-03-001	Shredder/Granulator[1]	Figure M.4 in Appendix M-A
Drawing D-35-52-800	55 Gallon Drum Scraper	Figure M.5 in Appendix M-A
Drawing D-43-10-6-100 (HRI, Inc.)	Motor Location and Specifications	Figure M.6 in Appendix M-A
Drawing 2106-P (Littleford)	Model-FKM-3000-D-Mixer[1]	Figure M.7 in Appendix M-A
Drawing PD 12/3/91	1129 Gallon Dispersing Tank	Figure M.8 in Appendix M-A
Drawing DL34055 (FCF-Bowers)	40/50/60 VSM 18 Disperser	Figure M.9 in Appendix M-A
Drawing PD 1/25/91	Barrel Dump Assembly	Figure M.10 in Appendix M-A
Drawing 665300-4-W404F (FD)	P&ID Process Areas	Figure M.11 in Appendix M-A
Drawing D990043 (BRI, Inc.)	Triple Rinse, HRI	Figure M.12 in Appendix M-A

[1] These units have been closed.

safety-kleen®

August 22, 2002

REC'D
AUG 28 2002
RCAP

Mr. Mostafa Kamal, PE, CHMM
Chief, Hazardous Waste Facilities Unit
Bureau of Waste Management
Kansas Department of Health and Environment
1000 SW Jackson, Suite 320
Topeka, Kansas 66612-1366

Re: Transfer of RCRA Permits
Safety-Kleen (Wichita), Inc.; KSD 007 246 846

Dear Mr. Kamal:

In am writing in response to your letter of August 9, to William Connors of Clean Harbors. More specifically, in response to comment three (3) of your letter I am providing revised pages of the Part B application for the facility referenced above. The replacement pages included with this letter reflect the facility's change of ownership. Additionally, some of the telephone numbers in the emergency contingency plan are being updated as well.

Since the company's name appears in the header on each page, the revised application is being provided in its entirety, with the exception of Section A (Part A), which was provided to the Agency previously, and the full size drawings in Volume 3. Included with these revised pages are strikeout and redline copies showing the text changes.

Please call me if you have any questions regarding this submission. My phone number is 952-898-0470.

Sincerely,

Thomas Emond
Regional Compliance Manager

cc: Ken Hewstowski/EPA with attachments
William Connors/Clean Harbors w/o attachments
Sean Howell/KDHE w/o attachments
Phil Retallick/Safety-Kleen w/o attachments

2549 N. NEW YORK AVENUE WICHITA, KS 67219

Clean Harbors Kansas, LLC
2549 North New York Avenue
Wichita, Kansas 67219
Telephone: 316/269-7400 Fax: 316/269-7455

Clean Harbors Kansas, LLC
RCRA Permit Application
Parts A & B

Volume 1 of 3

Submitted To:
State of Kansas Department of Health and Environment
and
United States Environmental Protection Agency – Region VII

February 18, 1992
Revised: August 14, 1998

Clean Harbors Kansas, LLC
2549 North New York Avenue
Wichita, Kansas 67219
Telephone: 316/269-7400
Fax: 316/269-7455

Clean Harbors Kansas, LLC
RCRA Permit Application
Parts A & B

Volume 1 of 3

February 18, 1992
Revised: August 14, 1998

Clean Harbors Kansas, LLC
2549 North New York Avenue
Wichita, Kansas 67219
Telephone: 316/269-7400 Fax: 316/269-7455

Clean Harbors Kansas, LLC
RCRA Permit Application
Parts A & B

Volume 1 of 3

Submitted To:
State of Kansas Department of Health and Environment
and
United States Environmental Protection Agency – Region VII

February 18, 1992
Revised: August 14, 1998

CERTIFICATION STATEMENT

I certify under penalty of law that this document and all attachments were prepared under my direction or supervision in accordance with a system designed to assure that qualified personnel properly gather and evaluate the information submitted. Based on my inquiry of the person or persons who manage the system, or those persons directly responsible for gathering the information, the information submitted is, to be the best of my knowledge and belief, true, accurate, and complete. I am aware that there are significant penalties for submitting false information, including the possibility of fine and imprisonment for knowing violations.

Robert M. Apple
Vice President of Operations
Hydrocarbon Recyclers, Inc. of Wichita

February 18, 1992

Section A - Part A Application

Part A Application

Section B - Facility Description

List of Figures ..... Page ii

List of Referenced Drawings ..... Page ii

Acronym Table ..... Page ii

B-1 Introduction: ..... Page 1

B-2 Facility Location: ..... Page 3

B-3 Location Information: ..... Page 9
- B-3a Physiography, Geology and Land Use: ..... Page 9
- B-3b Climate: ..... Page 10
- B-3c Surface Water Drainage: ..... Page 14
- B-3d Floodplain: ..... Page 15
- B-3e Seismicity: ..... Page 15

B-4 Traffic Information: ..... Page 16
- B-4a Off-site Traffic: ..... Page 16
- B-4b On-site Traffic and Load-Bearing Capacity: Page 17

B-5 Facility Security: ..... Page 19

B-6 Facility Process Unit Description: ..... Page 21
- B-6a Process Area Description: ..... Page 22
- B-6b Container Management Systems: ..... Page 24
- B-6c Tank Systems: ..... Page 24
- B-6d Other Regulated Units: ..... Page 25
- B-6e Non-regulated Units and Activities: ..... Page 25

B-7 Anticipated Change of Operations/Units: ..... Page 26

Endnote References ..... Page 28

Section C - Waste Characterization

List of Appendices ii

Acronym Table ii

C. Waste Characterization: 1
- C-1 Chemical and Physical Analysis: 2
  - C-1a Receiving and Acceptance Criteria: 6
- C-2 Waste Analysis Plan: 8
  - C-2a Parameters and Rationale: 8
  - C-2b Test Methods: 9
  - C-2c Sampling Methods: 10
  - C-2d Frequency of Analysis: 11
  - C-2e Additional Requirements for Wastes Generated Off-site: 12
  - C-2f Additional requirements for Handling Ignitable, Reactive, or Incompatible Wastes: .. 13
- C-3 Additional Waste Characterization Requirements - Pertaining to the Land Disposal Restrictions: 14

Section D - Use and Management of Containers

List of Figures iii

List of Tables iii

List of Appendices iii

List of Referenced Drawings iii

Acronym Table iv

D Introduction: 1
- D-1 Summary Description: 3
  - D-1a Building D: 10
  - D-1b The Process Area: 11
  - D-1c Building C: 11
  - D-1d Drum Dock: 12
  - D-1e Building B: 12
  - D-1f Building I: 12
  - D-1g Building J: 13
- D-2 Storage in Containers with Free Liquids: 14
  - D-2a General Area Design Features: 14
  - D-2b Unloading Areas: 15
  - D-2c Building D: 17
    - D-2c(1) Secondary Containment: 18
    - D-2c(2) Building Design: 19
  - D-2d Processing Area: 20
    - D-2d(1) Secondary Containment: 22
    - D-2d(2) Building Design: 23
  - D-2e Building C: 25
    - D-2e(1) Secondary Containment: 26
    - D-2e(2) Building Design: 27
  - D-2f Drum Dock: 28
    - D-2f(1) Secondary Containment: 29
    - D-2f(2) Building Design: 30
  - D-2g Building B: 31
    - D-2g(1) Secondary Containment: 32
    - D-2g(2) Building Design: 33
  - D-2h Building I: 34
    - D-2h(1) Secondary Containment: 35
    - D-2h(2) Building Design: 36
  - D-2i Building J: 37

D-2i(1) Secondary Containment: 38
D-2i(2) Building Design: 39
D-2j Bulk Container Storage: 40
D-3 General Container Management Practices: 42
D-3a Description of Containers: 42
D-3b Handling of Containers: 43
D-3b(1) Containers - 55 Gallon or Larger 46
D-3b(2) Containers - Smaller Than 55 Gallon: 47
D-3c Waste and Container Compatibility: 48
D-3d Condition of Containers: 49
D-3e Response to Leaks: 50
D-3f Special Requirements for Ignitable and Reactive Wastes: 51
D-3g Special Requirements for Incompatible Wastes: . 52
D-3h Transhipment of Containers of Waste: 54
D-4 Storage in Containers without Free Liquid: 56

Section E - Tank Systems

List of Tables ..... Page ii

List of Appendices ..... Page ii

List of Acronyms ..... Page ii

E-1 Introduction: ..... Page 1

E-2 Description of Tank Systems: ..... Page 3

E-3 Operational Practices: ..... Page 7
- E-3a General Operating Requirements: ..... Page 7
- E-3b Description of Feed Systems, Safety Cutoff, Bypass Systems, and Pressure Controls: ..... Page 9
  - E-3b(1) Feed Systems, Safety Cutoff, and Bypass Systems: ..... Page 9
  - E-3b(2) Pressure Controls: ..... Page 9
- E-3c Special Requirements for Handling Incompatible,Ignitable, or Reactive Waste: ..... Page 10
- E-3d Inspections: ..... Page 13
- E-3e Contingency Measures: ..... Page 13

E-4 Containment and Detection of Releases: ..... Page 14

E-5 Installation of Tank Systems: ..... Page 19

E-6 Closure: ..... Page 20

Section F - Inspection Plan

List of Appendices ii

Acronym Table ii

F-1 Introduction: 1

F-2 Inspection Requirements: 4
F-2a General Inspection Requirements: 4
F-2b Specific Process Inspection Requirements: 5
F-2b(1) Container/ Container Management Unit Inspection: 6
F-1b(2) Tank and Tank Systems Inspection: 7
F-2b(3) Miscellaneous Units: 9
F-2b(4) RCRA Air Emissions Monitoring: 10

F-3 Inspection Schedule: 11

Section G - Procedures to Prevent Hazards

List of Figures ..... Page ii

List of Appendices ..... Page ii

List of Referenced Drawings ..... Page ii

G-1 Introduction ..... Page 1

G-2 Security: ..... Page 1
G-2a Security Procedures and Equipment: ..... Page 1

G-3 Inspection Schedule: ..... Page 6

G-4 Preparedness and Prevention Requirements: ..... Page 9
G-4a Equipment Requirements: ..... Page 9
G-4a(1) Internal Communications: ..... Page 9
G-4a(2) External Communications: ..... Page 10
G-4a(3) Emergency Equipment: ..... Page 11
G-4a(4) Water for Fire Control: ..... Page 11
G-4b Aisle Space Requirement: ..... Page 12

G-5 Preventive Procedures, Structures, and Equipment: ... Page 13
G-5a Loading and Unloading Operations: ..... Page 14
G-5b Run-off and Run-on: ..... Page 18
G-5c Water Supplies: ..... Page 19
G-5d Equipment and Power Failure: ..... Page 20
G-5e Personal Protective Equipment: ..... Page 21

G-6 Prevention of Reaction of Ignitable, Reactive and Incompatible Wastes: ..... Page 23
G-6a Precautions to Prevent Ignition or Reaction of Ignitable or Reactive Waste and Mixing of Incompatible Wastes: ..... Page 23
G-6b Management of Ignitable or Reactive Wastes in Containers: ..... Page 25
G-6c Management of Incompatible Wastes in Containers: Page 27
G-6d Management of Ignitable or Reactive Wastes in Tanks: ..... Page 28
G-6e Management of Incompatible Wastes in Tanks: .... Page 30

G-7 Air Emission Standards for Equipment Leaks: ..... Page 32

Section H - Contingency/Emergency Plan

List of Figures ..... Page iii

List of Tables ..... Page iii

List of Appendices ..... Page iii

List of Referenced Drawings ..... Page iii

Acronym Table ..... Page iii

H-1 Introduction: ..... Page 1

H-2 General Information: ..... Page 2
- H-2a Facility name: ..... Page 2
- H-2b Owner and Operator of Facility: ..... Page 2
  - H-2b(1) Facility Operator: ..... Page 2
  - H-1b(2) Facility Owner(s): ..... Page 2
  - H-1b(3) Facility Telephone Number: ..... Page 3
- H-2c Location: ..... Page 3
- H-2d Layout and Site Plan: ..... Page 3
- H-2e Description of Facility Operations: ..... Page 5

H-3 Emergency Response Coordinators: ..... Page 5

H-4 Implementation: ..... Page 8
- H-4a Fires and/or Explosions: ..... Page 8
- H-4b Material Releases: ..... Page 9

H-5 Emergency Response Procedures: ..... Page 10
- H-5a Notification Procedures: ..... Page 10
- H-5b Identification of Hazardous Materials: ..... Page 13
- H-5c Hazard Assessment: ..... Page 13
- H-5d Control Procedures: ..... Page 14
- H-5e Emergency Response Procedures: ..... Page 17
  - H-5e(1) Injuries to Personnel: ..... Page 17
  - H-5e(2) Fires/Explosions: ..... Page 19
  - H-5e(3) Releases: ..... Page 21
- H-5f Post-Emergency Activities: ..... Page 24

H-6 Emergency Equipment: ..... Page 27
- H-6a Emergency Alarm and Communication Systems: ... Page 27

H-6b Fire extinguishers: ..... Page 28
H-6c Fire hydrants: ..... Page 28
H-6d First Aid Stations: ..... Page 29
H-6e Personal Protective Equipment (PPE): ..... Page 29
H-6f Safety Showers and Eye Wash Stations: ..... Page 30
H-6g Self-Contained Breathing Apparatus (SCBA): ..... Page 30
H-6h Other Emergency Response Equipment: ..... Page 31

H-7 Coordination Agreements: ..... Page 32
H-7a Emergency Authorities: ..... Page 32
H-7b Local Contractors: ..... Page 32

H-8 Evacuation Plan: ..... Page 33
H-8a Criteria for Evacuation: ..... Page 33

H-9 Required Reports: ..... Page 35
H-9a Reports to the Regional Administrator: ..... Page 35
H-9b SARA Reporting: ..... Page 36

Section I - Training Program

List of Appendices ii

List of Acronyms ii

I-1 Outline of Training Program: 1
- I-1a Job Titles and Duties: 1
- I-1b Training Content, Frequency and Techniques: 4
- I-1c Director of the Training Program: 7
- I-1d Relevance of Training to Job Position: 8
- I-1e Training for Emergency Action/Response: 9

I-2 Implementation of Training Program: 11

Section J - Closure Plan

List of Figures iii

List of Tables iii

List of Appendices iii

List of Referenced Drawings iii

Acronym Table iv

J-1 Introduction 1

J-2 Hazardous Waste Management Units to be Closed 2

J-3 Closure Performance Standard 3
J-3a Establishment of Cleanup Standards 4

J-4 Partial Closure and Final Closure Activities 9
J-4a Disposal or Decontamination of Equipment, Structure and Soils 12
J-4a(2)(a) HWMUs with no internal or complicated external parts 18
J-4a(2)(b) HWMUs with internal or complicated external parts 20
J-4a(3)(b) Decontamination of large miscellaneous handling equipment with no internal or complicated external parts 25
J-4a(3)(c) Decontamination of large miscellaneous handling equipment with internal or complicated external parts 26
J-4b Hazardous Waste Handling Procedures 28

J-5 Maximum Extent of Operations Unclosed 29

J-6 Maximum Waste Inventory 30

J-7 Schedule for Final Closure 31
J-7a Expected Year of Final Closure 31

J-8 Closure Plan Amendment 33

J-9 Individual Unit Closures 35

J-9a Container Management Unit (CMU) Closure 35
- J-9a(1) Process and Unit Description 36
- J-9a(2) Unit Closure Procedures 38
- J-9a(3) Unit Closure Schedule 42

J-9b Tank System Closure 43
- J-9b(1) Process and Unit Description 43
- J-9b(2) Unit Closure Procedures 45
- J-9b(3) Unit Closure Schedule 51

J-9c Miscellaneous Unit Closure 52
- J-9c(1) Process and Unit Description 52
- J-9c(2) Unit Closure Procedures 56
- J-9c(3) Unit Closure Schedule 61

J-10 Financial Requirements 62

Endnote 63

Section K - Financial Requirements

List of Appendices i

List of Acronyms i

K-1 Financial Assurance: 1

K-2 Insurance Coverage: 3

K-3 Notice in Deed: 4

Section L - Solid Waste Management Units and Corrective Action

L-1 Information Requirements for Solid Waste Management Units: 1
L-1a Description of Solid Waste Management Units: 1

L-2 Information Pertaining to Releases: 4

L-3 Superfund Activities 5

Section M - Other Regulated Units

List of Figures ..... Page iv

List of Appendices ..... Page iv

List of Referenced Drawings ..... Page v

M-1 Introduction ..... Page 1
M-1a Wastes Managed in Miscellaneous Units ..... Page 1-A

M-2 Unit Descriptions ..... Page 3
M-2a Shredder and Granulator Units ..... Page 3
M-2a(1) Purpose ..... Page 3
M-2a(2) Shredder and Granulator Units compliance with standards for emissions or releases Page 5
M-2a(2)(a) Prevention of releases to the subsurface environment or groundwater ..... Page 5
M-2a(2)(b) Prevention of releases to surface water, wetlands, or soil ..... Page 8
M-2a(2)(c) Prevention of releases to the air ..... Page 8
M-2a(2)(d) Monitoring and Inspections . Page 11
M-2b Drum Scraper Unit ..... Page 12
M-2b(1) Purpose ..... Page 12
M-2b(2) Drum Scraper Unit compliance with standards for emissions or releases .. Page 13
M-2b(2)(a) Prevention of releases to the subsurface environment or groundwater ..... Page 13
M-2b(2)(b) Prevention of releases to surface water, wetlands or soil ..... Page 15
M-2b(2)(c) Prevention of releases to the air ..... Page 15
M-2b(2)(d) Monitoring and Inspections . Page 17
M-2d Dispersing Unit ..... Page 25
M-2d(1) Purpose ..... Page 25
M-2d(2) Dispersing Unit compliance with applicable hazardous waste treatment and storage standards ..... Page 27

M-2d(2)(a) Description of Tank System . Page 27
M-2d(2)(b) Operational Practices ..... Page 29
M-2d(2)(b)(1) General Operating Requirements ..... Page 29
M-2d(2)(b)(2) Description of Feed Systems, Safety Cutoff, Bypass Systems, and Pressure Controls ..... Page 30
M-2d(2)(b)(3) Special Requirements for Handling Incompatible, Ignitable, or Reactive Waste ..... Page 31
M-2d(2)(b)(4) Inspections ..... Page 32
M-2d(2)(b)(5) Contingency Measures .. Page 32
M-2d(2)(c) Containment and Detection of Releases ..... Page 33
M-2d(3) Dispersing Unit compliance with standards for emissions or releases .. Page 36
M-2d(3)(a) Prevention of releases to the subsurface environment or groundwater ..... Page 36
M-2d(3)(b) Prevention of releases to surface water, wetlands or soil ..... Page 37
M-2d(3)(c) Prevention of releases to the air ..... Page 38
M-2d(3)(d) Monitoring and Inspections . Page 39
M-2e Drum Washing Unit ..... Page 40
M-2e(1) Purpose ..... Page 40
M-2e(2) Drum Washing Unit compliance with standards for emissions or releases .. Page 42
M-2e(2)(a) Prevention of releases to the subsurface environment or groundwater: 264.601 (a) .. Page 42
M-2e(2)(b) Prevention of releases to surface water, wetlands or soil ..... Page 43
M-2e(2)(c) Prevention of releases to the air ..... Page 43
M-2e(2)(d) Monitoring and Inspections . Page 45

M-3 Hydrologic, Geologic, and Meteorologic Assessments .. Page 46

M-4 Potential Pathways for Exposure ..... Page 47

M-4a Shredder and Granulator Units ..... Page 47
M-4b Drum Scraper Unit ..... Page 49
M-4d Dispersing Unit ..... Page 53

M-5 Effectiveness of Treatment ..... Page 56
M-5a Shredder and Granulator Units ..... Page 56
M-5b Drum Scraper Unit ..... Page 57
M-5d Dispersing Unit ..... Page 59
M-5e Drum Washing Unit ..... Page 60

M-6 Special Requirements for Handling Ignitable, Reactive and Incompatible Wastes ..... Page 61

Section N - Air Emissions

List of Attachments ..... Page ii

N-1 Air Emission Standards for Process Vents ..... Page 1
N-1a Applicability ..... Page 1

N-2 Air Emissions Standards for Equipment Leaks ..... Page 2
N-2a Applicability ..... Page 2
N-2b Pumps in Light Liquid Service ..... Page 3
N-2c Compressors ..... Page 4
N-2d Pressure Relief Devices ..... Page 5
N-2e Sampling Connection Systems ..... Page 5
N-2f Open-ended Valves or Lines ..... Page 5
N-2g Valves in Gas/Vapor Service or in Light Liquid Service ..... Page 6
N-2h Pumps & Valves in Heavy Liquid Service; Flanges, and Other Connectors ..... Page 7

N-3 Delay of Repair ..... Page 9
N-3a Valves: ..... Page 9
N-3b Pumps: ..... Page 10

N-4 Alternative Standards - Valves in Gas/Vapor Service or Light Liquid Service: ..... Page 11
N-4a Percentage of Valves Allowed to Leak ..... Page 11
N-4b Skip Period Leak Detection and Repair ..... Page 12

N-5 Test Methods and Procedures ..... Page 13
N-5a Testing for No Detectable Emissions ..... Page 13
N-5b Testing Organic Concentration ..... Page 14

N-6 Recordkeeping Requirements ..... Page 16
N-6a Equipment Information ..... Page 16
N-6b Method Of Compliance ..... Page 17
N-6c Control Devices ..... Page 18
N-6d Leak Identification ..... Page 19
N-6e Equipment List ..... Page 21
N-6f No Detectable Emission Equipment ..... Page 21
N-6g Pressure Relief and Vacuum Equipment ..... Page 21
N-6h Difficult to Monitor Valves ..... Page 22
N-6i Process Information for Exemptions ..... Page 22
N-6j Operating Information ..... Page 23

N-6k Additional Fugitive Emission Requirements ..... Page 23

Section Y - Referenced Drawings

Y-1 Introduction: ..... Page 1

Section Z - Correspondence

Part A

Table of Contents

List of Figures ..... Page ii

List of Referenced Drawings ..... Page ii

Acronym Table ..... Page ii

B-1 Introduction: ..... Page 1

B-2 Facility Location: ..... Page 3

B-3 Location Information: ..... Page 9
- B-3a Physiography, Geology and Land Use: ..... Page 9
- B-3b Climate: ..... Page 10
- B-3c Surface Water Drainage: ..... Page 14
- B-3d Floodplain: ..... Page 15
- B-3e Seismicity: ..... Page 15

B-4 Traffic Information: ..... Page 16
- B-4a Off-site Traffic: ..... Page 16
- B-4b On-site Traffic and Load-Bearing Capacity: Page 17

B-5 Facility Security: ..... Page 19

B-6 Facility Process Unit Description: ..... Page 21
- B-6a Process Area Description: ..... Page 22
- B-6b Container Management Systems: ..... Page 24
- B-6c Tank Systems: ..... Page 24
- B-6d Other Regulated Units: ..... Page 25
- B-6e Non-regulated Units and Activities: ..... Page 25

B-7 Anticipated Change of Operations/Units: ..... Page 26

Endnote References ..... Page 28

List of Figures

Figure B.1, Site Location Map
Figure B.2, Facility Map
Figure B.3, Facility Layout
Figure B.4, Hazardous Waste Management Areas
Figure B.5, Annual Surface Wind Rose

List of Referenced Drawings

Drawings Located in Section Y, Drawings

Drawing 50-01-01-001, Site Location Map
Drawing 50-01-11-001, Facility Map
Drawing 50-01-01-002, Facility Layout
Drawing 50-01-10-001, Hazardous Waste Management Areas
Drawing 50-00-01-001, Annual Surface Wind Rose

Acronym Table

Clean Harbors Kansas, LLC (CHK)
United States Environmental Protection Agency (USEPA)
Resource Conservation and Recovery Act (RCRA)
Kansas Administrative Regulations (KAR)
Code of Federal Regulations (CFR)
Mean Sea Level (MSL)
National Oceanic and Atmospheric Administration (NOAA)
Average Daily Traffic (ADT)

B-1 Introduction:

The Clean Harbors Kansas, LLC facility is located in Wichita, Kansas. The facility stores, treats, and recovers for recycling hazardous and nonhazardous wastes. Clean Harbors Kansas, LLC blends materials containing heating value for beneficial use and energy recovery as hazardous waste fuel (e.g., cement kiln fuel) and recovers solvents for further management. Clean Harbors Kansas, LLC also stores, processes, and otherwise manages waste solvents, sludges, solids, and water for subsequent shipment to other United States Environmental Protection Agency (USEPA) permitted (or interim status) facilities for distillation, beneficial reuse, or disposal. Clean Harbors Kansas, LLC also stores waste solvent, hydrocarbons, paint-related waste streams, solids, corrosive waste streams, and water-based waste streams. Hazardous waste management at the facility includes, but is not limited to, fuel blending for energy recovery, other physical treatment (including shredding and granulating) for waste minimization or to render the waste more amenable for subsequent management, accumulation of materials for reclamation, accumulation for hazardous waste landfill disposal, accumulation of low BTU

liquids for deepwell injection, repackaging for incineration, processing for solvent and carbon recovery, and storage of industrial waste waters for subsequent discharge. Storage and treatment occurs in both containers and tanks.

The facility operates under the requirements of the Resource Conservation and Recovery Act (RCRA) and the Kansas Hazardous Waste Management Act as set forth in Kansas Administrative Regulations (KAR), Title 28, Article 31. The KAR incorporate, with few additions, the RCRA regulations contained in 40 CFR 260 through 270. Therefore, this section will refer only to the federal regulations.

This section discusses facility location, location information, facility layout, traffic information, and general facility process unit description as required by the Code of Federal Regulations (CFR); i.e., 40 CFR 270.14(b)(1), (10), (11) and (19). A map showing topographic detail as required by 40 CFR 270.14(b)(19) is also presented in this section.

A topographic map showing well locations required under 40 CFR 270.14(c)(3) is included in Section A, Part A Permit Application and this section. More specific information on the facility design and operation is presented in subsequent application sections C through N.

B-2 Facility Location:

Figure B.1, Site Location Map (Drawing 50-01-01-001, Site Location Map) shows the location of the facility; the facility is located at 2549 North New York Avenue in Wichita, Kansas. This address is in the Northeast quarter of the Southeast quarter of Section 4, Township 27 South, Range 1 East. The facility is located in Sedgwick County (Sedgwick County population 403,662, 1990 census). The facility is located in an industrial area of Wichita; the population of Wichita was approximately 283,496 (estimated) as of 7/1/84 (Population for Kansas Counties and Incorporated Places[1]).

The facility and the surrounding area are shown on Figure B.2, Facility Map (Drawing 50-01-11-001, Facility Map); facility information is superimposed on a topographic base map with contour intervals of two (2) feet as required by 40 CFR 270.14(b)(19). The map/drawing is based on a topographic map generated in January of 1992 and includes areas within 1,000 feet of the facility. The facility is located approximately at north latitude 37E43'50" and west longitude 97E19'08". The area that includes the process plant area and hazardous waste storage areas

Figure B.1. Site Location Map

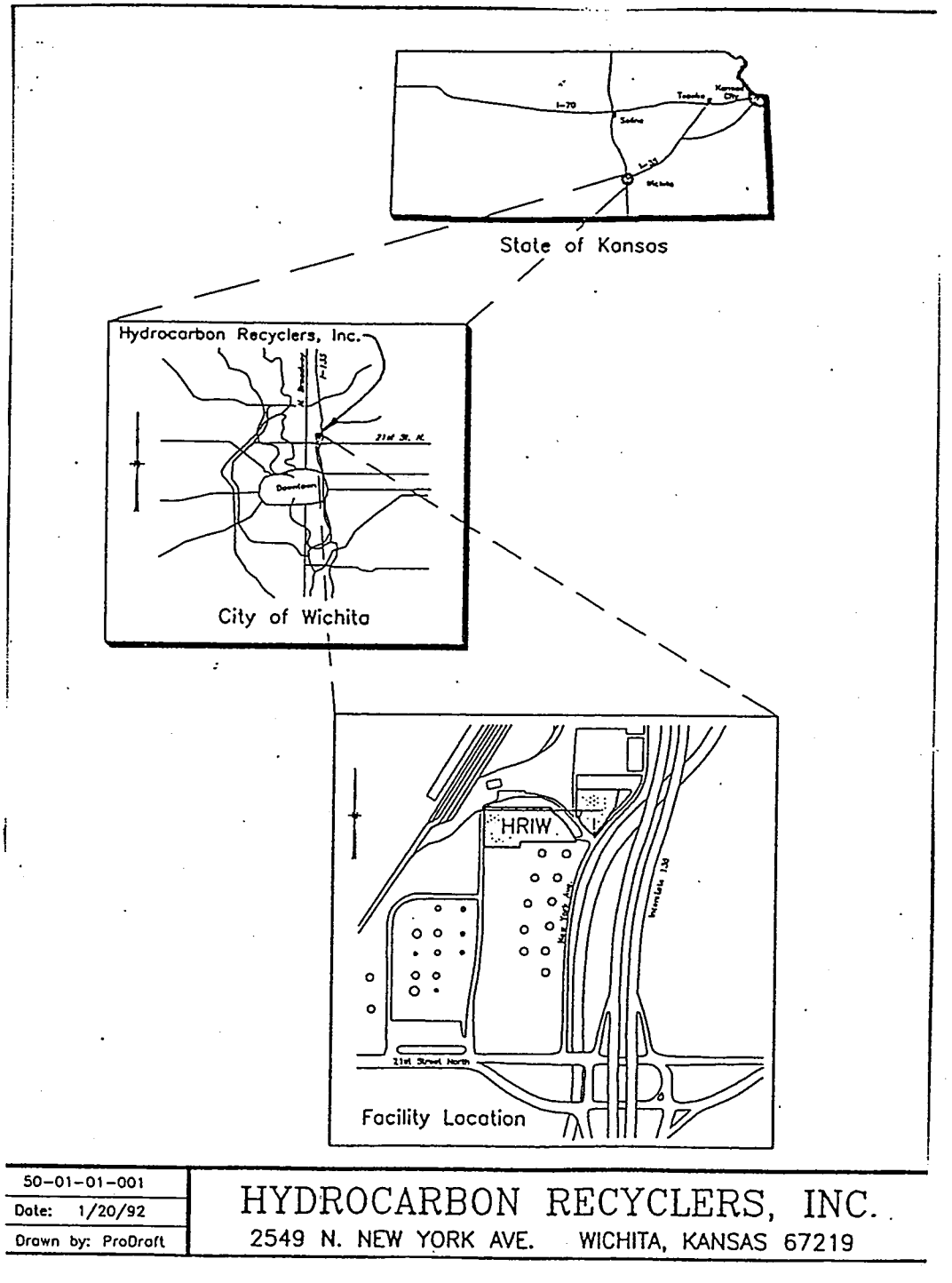

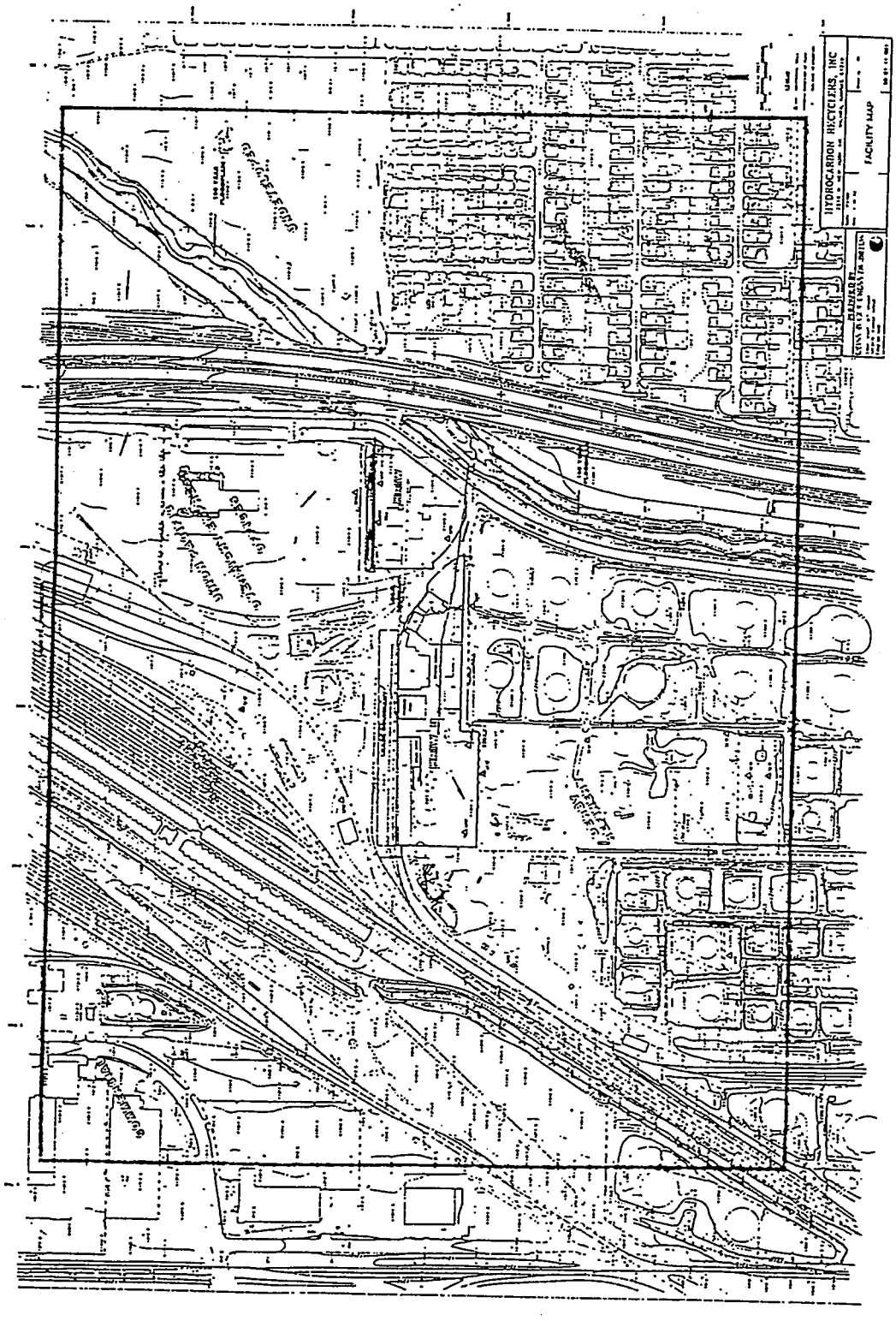

Figure B.2. Facility Map

for tanks and containers make up the active portion of the facility. The facility boundary, a distance of 1000 feet around the facility boundary and the active portion of the facility are shown on Figure B.2 (Drawing 50-01-11-001). Privately owned land abuts the facility on three sides: Union Pacific Railroad and Overnite Transportation own property to the north; Derby Refinery is located south of the facility; and land owned by Derby refinery adjoins the site to the west. New York Avenue is located to the east of the facility.

The administration and hazardous waste management areas as well as general facility layout, access control, and sewer lines are shown on Figure B.3, Facility Layout (Drawing 50-01-01-002, Facility Layout). The hazardous waste storage buildings and associated loading areas are shown on Figure B.4, Hazardous Waste Management Areas (Drawing 50-01-10-001, Hazardous Waste Management Areas). The drawings generally show access roads and internal roadways, administration and process plant buildings, and hazardous waste management locations. The storage of ignitable and reactive wastes on-site is in compliance with the equipment

Buffer Zone requirements as set forth in 40 CFR 264.176, and 264.198(b). Specifics regarding container management, tank systems, and are presented in Sections D, E, and M (Use and Management of Containers, Tank Systems and Other Regulated Units).

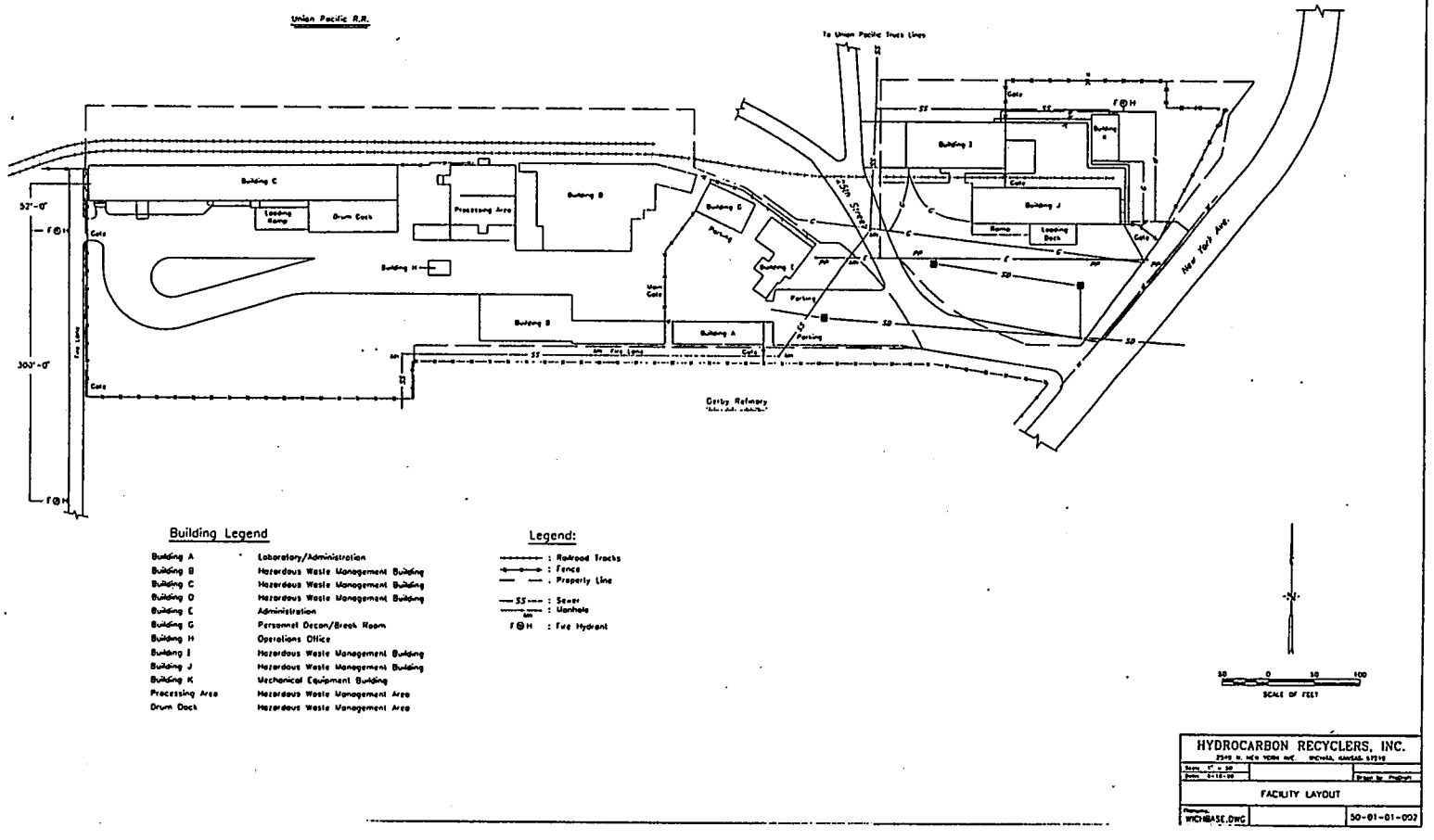

Figure B.3. Facility Layout

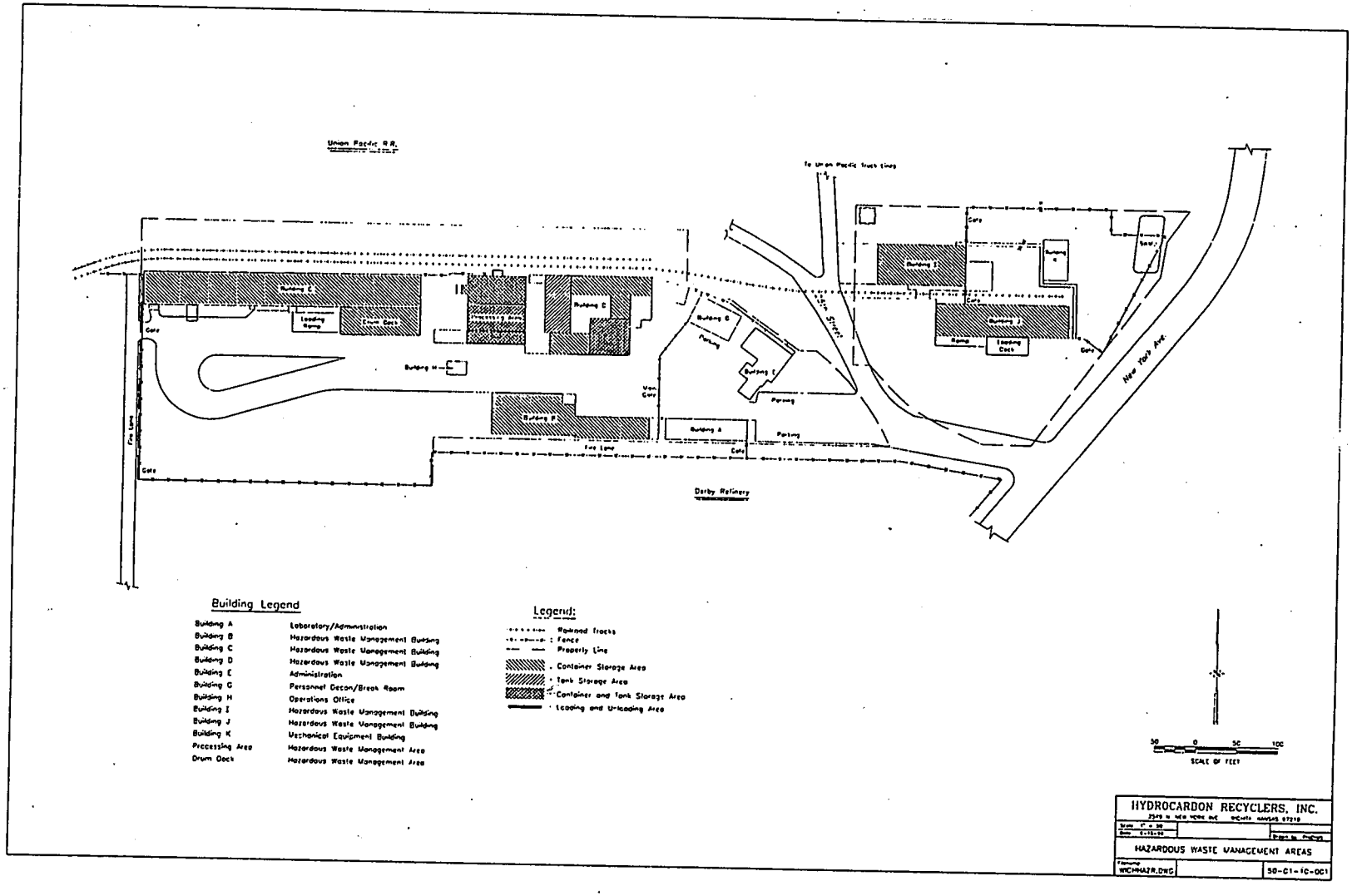

Figure B.4. Hazardous Waste Management Areas

B-3 Location Information:

B-3a Physiography, Geology and Land Use:

Sedgwick County is situated in the Arkansas River Lowlands section of the Central Lowlands physiographic province[2]. The facility is located in an area of very low topographic relief; elevation on site is about 1315 feet above MSL. The extreme flatness of the broad Arkansas River valley and gently rolling slopes provide the low relief of the vicinity.

In summary, the soil is developed on recent and old alluvial sediments of the Elandco and Tabler formations[3]. These sandy and clayey alluvial deposits are underlain by Wellington shale. Approximately 10 feet of alluvial clay with fine sand overlies approximately 30 feet of alluvial sand. Ground water source in the area is from permeable sands in the alluvial deposits; this ground water aquifer has transmissivities up to 250,000 gallons per day per foot. The water table in the vicinity, as reported in the Draft Remedial Investigation Report of the 29th and Mead

RI/FS (August 1991), is approximately 1293 feet above Mean Sea Level (MSL)[4].

The surrounding land is generally used for industrial purposes: land use to the south and west is by Derby Refinery, to the north by Union Pacific Railroad and Overnite Transportation, with highway I-135 to the east.

Past land use of the facility property has included light to medium industrial activities since approximately 1940.

B-3b **Climate:**

Wichita, Kansas is located in the Central Great Plains where a wide variety of weather conditions may occur year round. Mixing of warm, moist, Gulf coast air masses with cold, dry Arctic air masses can result in severe storms and rapid changes in weather conditions. Climatological information is based on National Oceanic and Atmospheric Administration (NOAA) data.

Temperature extremes from minus 21 degrees to more than 110 degrees Fahrenheit have been recorded in Wichita; however, temperatures below zero occur much less frequently than

temperatures above 90 degrees Fahrenheit. The average relative humidity ranges from 55 percent in the afternoon to 80 percent at dawn. The average daily maximum temperature in summer is ninety-one degrees (91°F). The highest recorded temperature was 113°F (July 1954). The average daily minimum temperature in winter is twenty-three degrees (23°F). The lowest temperature on record was minus twenty-one degrees (-21°F) in February of 1982[5].

Prevailing winds are from the south; the most severe thunderstorms occur mainly during the spring and early summer. The highest, one-minute observed wind speed recorded was forty-eight (48) mph[5]. Figure B.5, Annual Surface Wind Rose (Drawing 50-00-01-001, Annual Surface Wind Rose) shows the prevailing wind direction and speed measured in Wichita, Kansas from 1951 to 1960.

This page intentionally left blank.

Figure B.5. Annual Surface Wind Rose

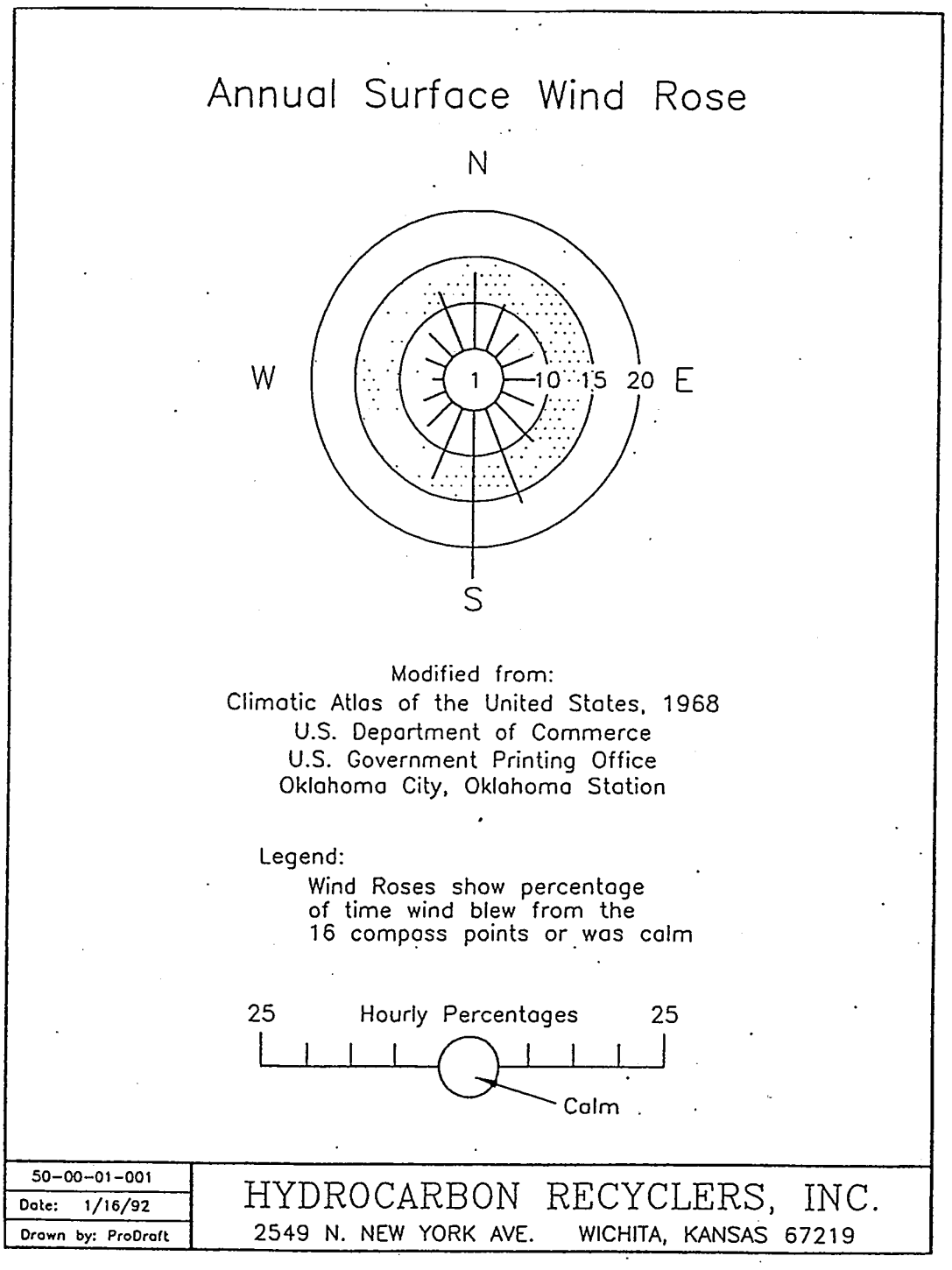

The majority of precipitation occurs during the period between April and September. The average precipitation is thirty (30) inches per year; the average seasonal snowfall is fifteen (15) inches. The heaviest one day rainfall for Wichita during the period of record from 1951 to 1980 was 5.03 inches (October, 1985). The 25-year, 24-hour precipitation event is 6.2 inches as determined from "Technical Paper No. 40, Rainfall Frequency Atlas of the United States" (US Dept. of Commerce)[6].

B-3c **Surface Water Drainage:**

Surface water drainage is in two directions; most surface water on the site drains to the east branch of Chisholm Creek located east of the facility, although some surface water drains to the southwest into Chisholm Creek. The east branch joins Chisholm Creek south of the facility and Chisholm Creek discharges into the Arkansas river approximately 6 miles south of the facility. Surface water flow is shown on Figure B.2, Facility Map (Drawing 50-01-11-001).

B-3d **Floodplain:** **40 CFR 270.14(b)(11)(iii)**

A Flood Hazard Boundary Map prepared by the US Department of Housing and Urban Development, Federal Insurance Administration, for Sedgwick County, Kansas was reviewed pursuant to 40 CFR 270.14(b)(11)(iii). The Special Flood Hazard Area (100-year floodplain) within 1000 feet of the facility boundary is shown on Figure B.2, Facility Map (Drawing 50-01-11-001). The facility boundary is not within the 100 year floodplain. Therefore, the requirements of 40 CFR 264.18(b) are not applicable.

B-3e **Seismicity:** **40 CFR 270.14(b)(11)(i)and(ii)**

The CHK facility is located in Sedgwick County, Kansas. No areas in Kansas are listed in Appendix VI of 40 CFR, Part 264, as needing seismic consideration. The facility is not located in a seismic hazard zone, therefore, the requirements of 40 CFR 264.18(a) are not applicable.

B-4 Traffic Information: 40 CFR 270.14(b)(10)

B-4a Off-site Traffic:

Shipments of materials will be by truck or rail. It is expected that most truck shipments will access the facility from interstate highway I-135 using 21st Street North and New York Avenue. To handle rail shipments, a Union Pacific railroad siding is located along the north side of the facility. Figure B.1, Site Location Map (Drawing 50-01-01-001), shows these access routes.

Highway I-135 is a divided, six-lane, two-way, concrete interstate highway. The Average Daily Traffic (ADT) recorded by the Transportation Planning Division of the Kansas State Highway Department (KSHD) for this stretch of I-135 in 1990 was 50,973 vehicles south of the 21st Street interchange and 43,950 vehicles north of the interchange. Twenty-first (21st) Street is generally a four-lane, two-way thoroughfare; however, the roadway is split into a two-lane, one-way pair at the intersection with New York Avenue. The ADT recorded in 1990 on 21st Street to the west of the I-135 interchange was 14,924 vehicles. New York

Avenue is a low volume, industrial roadway consisting of two-lane, two-way traffic; no ADT is recorded.

Truck traffic into the facility may average up to approximately twenty (20) shipments of hazardous waste per day. Typical trucks accessing the facility will be tractor trailer rigs and straight trucks. The overall level of service on local streets and highways is not anticipated to be affected by facility traffic. Railcar traffic into the facility is expected to average up to two railcars per week.

The facility is located in an industrial area of Wichita. The existing local streets and highways currently accommodate heavy vehicles carrying the maximum legal load.

B-4b **<u>On-site Traffic and Load-Bearing Capacity</u>:**

Enclosed tractor trailers, tanker trucks, dump trucks, dump trailers, or intermodal transport container trailers, etc., may be used to transport materials to, from, and within the facility. The roadway foundation is adequate to accommodate traffic consisting of truck and trailer combination vehicles. No bridges exist on-site.

The most active areas on-site are surfaced to minimize the generation of dust and reduce maintenance requirements. Where surfaced, roadways are composed of six inch, reinforced concrete construction with stabilized sub-soil. All other traffic areas are provided with surface gravel and are maintained as needed.

Vehicular traffic into the plant is controlled through gate entrances. The active portion of the facility is divided by a public right-of-way. On-site traffic, between the main portion of the facility and Buildings I and J, includes crossing the public right-of-way at a ninety degree angle. On-site traffic routing, alignment of facility roadways, and internal traffic patterns are shown on Figure B.3, Facility Layout (Drawing 50-01-01-002). Loading and unloading areas are shown on Figure B.4, Hazardous Waste Management Areas (Drawing 50-01-10-001).

B-5 Facility Security: 264.14 and 122.25(a)(4)

The facility security system is discussed in detail in Section G, Procedures to Prevent Hazards. Where required for security, the CHK facility is surrounded by a six foot chain link fence with gates (see Figure B.3, Facility Layout and Drawing 50-01-01-002). Personnel and vehicle access is controlled by an electronic system which is designed to prevent the unknowing entry, and minimize the unauthorized entry, of persons or livestock onto active portions of the facility. This system may be shut down for maintenance operations at which time security will be provided by facility personnel or locked gates. Note that fencing is not provided where buildings and building entrances provide a barrier to unauthorized entry. To meet the security requirements of 40 CFR 264.14 in areas without fencing or building walls/doors, 24 hour surveillance will be provided when required. In addition, employees are instructed to question and direct unauthorized visitors to the office should they try to enter the active portion of the facility.

Warning signs as required by 40 CFR 264.14 have been placed at each entrance and along the barrier to unauthorized entry surrounding the facility.

Inspection of the fence line and signs are included in the facility inspection plan (See Section F, Inspection Plan for additional details).

B-6 Facility Process Unit Description:

As required in 40 CFR 270.14(b)(1), the following is a general overview of the facility; additional details are provided in Section D (Use and Management of Containers), Section E (Tank Systems), Section L (Solid Waste Management Units and Corrective Action) and Section M (Other Regulated Units). The hazardous waste management units at the facility include storage and treatment tanks, container management units, waste loading and unloading facilities and waste processing facilities. Typical sources of waste include automotive manufacturers, tire manufacturers, plating facilities, aircraft manufacturers, as well as the food processing, pharmaceutical, oil industries automotive repair shops, industrial maintenance operations, drycleaning facilities, and other industrial sources

Prior to acceptance of a waste stream, the facility requires the generator to supply specific information about the waste. After a review of information supplied by the generator has been deemed completed and prior to waste receipt at the facility, CHK personnel determine the proposed management practices for the waste at the facility. Generators are then advised that their waste stream may be accepted or that management of the waste

stream at CHK has been denied. The properties of incoming waste streams (i.e., shipments) from the generator are compared against the information supplied prior to shipment. For further details regarding waste receipt and analysis, refer to Section C (Waste Characterization).

Final and partial closure plans for the CHK facility are provided in Section J (Closure Plan). CHK maintains financial assurance for facility closure and insurance; details are described in Section K (Financial Requirements). Equipment (in hazardous waste service) removed for replacement during maintenance operations will be decontaminated and managed according to procedures similar to closure procedures as delineated in Section J.

B-6a **Process Area Description:**

A variety of hazardous waste management units are utilized for storage, treatment or to otherwise manage wastes at the CHK facility; e.g., container management units and tank systems as well as processing equipment. Section A (Part A Permit Application) lists storage buildings, tanks, and processes utilized by Clean Harbors Kansas, LLC Additional buildings, such as an

administration building, personnel change rooms, laboratory, and etc., are also provided to support the various unit operations. Refer to Figure B.3, Facility Layout (Drawing 50-01-01-002) for general location of these buildings.

The general location of waste management areas are depicted on Figure B.4, Hazardous Waste Management Areas (Drawing 50-01-10-001); flow of wastes between units is addressed in Section N (Air Emissions). A general description of tank, container and processing systems follows. Detailed discussions of these systems is provided in Sections D (Use and Management of Containers), E (Tank Systems) and M (Other Regulated Units).

Hazardous waste storage, treatment, and processing occurs in seven storage areas at the CHK facility. Hazardous waste is managed in tanks, containers and process units in Building D and the Processing Area; Building C, the Drum Dock, Building B, Building I and Building J are utilized for hazardous waste management in containers and process units. An overview regarding these activities is presented in the following paragraphs.

B-6b Container Management Systems:

Seven (7) buildings at the facility are designated for container management. Permitted storage capacities for each building are designated in Addendum B to the Part A Permit Application (Section A). Container management areas will be operated such that the stored volume will not exceed the permitted capacity. The volume of waste stored in any of the container storage buildings is dictated by containment volumes and operational requirements. Specifics regarding container management at the facility are discussed in Section D, Container Management.

B-6c Tank Systems:

A variety of tank systems are used at the CHK facility. Tanks are used to store and/or treat liquids, solids, and sludge. The tank systems presently in use or planned are identified and discussed in detail in Section E, Tank Systems.

B-6d Other Regulated Units:

Additional units are utilized for hazardous waste management activities at the CHK facility; these units are discussed in detail in Section M, Other Regulated Units.

B-6e Non-regulated Units and Activities:

In addition to hazardous wastes regulated under 40 CFR 264, other industrial wastes as well as selected household wastes are managed at the CHK facility. These wastes include, but are not limited to, used oil destined for burning for energy recovery (regulated under 40 CFR 266 Subpart E), synthetic oil reprocessing, industrial coolants and waste waters.

Processing equipment on-site as described in the Part A application may be utilized for management of non-hazardous waste. The procedures used for decontaminating equipment between hazardous waste service and subsequent non-hazardous waste service are provided in Attachment C-A to Section C (Waste Characterization) and Section E (Tank Systems).

B-7 Anticipated Change of Operations/Units:

Additional waste management and operations planned for the CHK facility after permit issuance are of two types: 1) changes as a result of new regulations and permitting requirements, and 2) expansion of operations to meet the challenges of future local and regional waste management requirements. Anticipated waste management needs include:

- The addition of newly identified wastes (as they become regulated) to the Part A permit;

- Modification of the facility and permit application to accommodate evolving local, state, and federal regulations.

This page intentionally left blank

Endnote References

1. Kansas Department of Agriculture, 1986. Population for Kansas Counties and Incorporated Places. Document Number AD 11.19, 1986, 12 pp.

2. Lane, Charles W. and Don E. Miller, December, 1965. Geohydrology of Sedgwick County, Kansas. State Geological Survey of Kansas, Bulletin 176, 100 pp.

3. United States Department of Agriculture, Soil Conservation Service, April, 1979. Soil Survey of Sedgwick County, Kansas. 126 p.

4. Groundwater Technology, Inc., August 1991. Draft Remedial Investigation Report of the 29th and Mead RI/FS. Volume 1, prepared for Wichita North Industrial District, 60 pp.

5. US Department of Commerce - National Oceanic and Atmospheric Administration, 1989. Local Climatological Data - Annual Summary With Comparative Data - Wichita, Kansas. ISSN 0198-2214, 8 pp.

6. Hershfield, David M., US Dept. of Commerce, Soil Conservation Service, Rainfall Frequency Atlas of the United States - Weather Bureau Technical Paper No. 40, 115 pp.

Clean Harbors Kansas, LLC
RCRA Permit Application
Section C
Waste Characterization

Table of Contents

List of Appendices ii

Acronym Table ii
C-1 Chemical and Physical Analysis: 2
C-1a Receiving and Acceptance Criteria: 6
C-2 Waste Analysis Plan: 8
C-2a Parameters and Rationale: 8
C-2b Test Methods: 10
C-2c Sampling Methods: 11
C-2d Frequency of Analysis: 12
C-2e Additional Requirements for Wastes Generated Off-site: 12
C-2f Additional Requirements for Handling Ignitable, Reactive, or Incompatible Wastes: .. 13
C-3 Additional Waste Characterization Requirements Pertaining to the Land Disposal Restrictions: 14

List of Appendices

Appendix C-A Waste Analysis Plan

Acronym Table

Clean Harbors Kansas, LLC (CHK)
Kansas Administrative Regulations (KAR)
Resource Conservation and Recovery Act (RCRA)
Title 40 of the Code of Federal Regulations (40 CFR)
Waste Analysis Plan (WAP)
Environmental Protection Agency (EPA)
Toxic Substances Control Act (TSCA)
Polychlorinated Biphenyl (PCB)

C. Waste Characterization: 40 CFR Parts 261, 262, 264, 268 and 270

The purpose of this section, Waste Characterization, is to provide a general description of the waste types anticipated for management, and the sampling and analytical procedures to be implemented, at Clean Harbors Kansas, LLC. This section is provided to fulfill the requirements of the Kansas Administrative Regulations (KAR), and 40 CFR Parts 261, 262, 264, 268, and 270. The KAR incorporate, with few additions, the RCRA regulations contained in 40 CFR Parts 260 through 270. Therefore, this section will refer only to the federal regulations.

This section contains a description of the provisions for waste sampling and analysis related to the management of wastes at CHK. These provisions have also been incorporated into a document referred to as the Waste Analysis Plan (WAP), which has been provided as Appendix C-A. The terms used in Section C will have the same meaning as those defined in the WAP.

C-1 Chemical and Physical Analysis: 40 CFR 264.13(a) and 270.14(b)(2)

CHK has identified wastes which are acceptable for management at CHK, and wastes which will not be accepted for management at CHK. Wastes in these categories are identified below.

- Wastes Acceptable for Management: Materials acceptable for management at CHK will include solid wastes and hazardous wastes. There are two (2) general categories of hazardous wastes according to 40 CFR 261.3. These categories are:

  - Characteristic Wastes: Characteristic wastes exhibit any hazardous characteristic identified in 40 CFR Part 261, Supbart C. The characteristics are ignitability, corrosivity, reactivity, or toxicity.

  - Listed Wastes: Listed wastes include those wastes listed in 40 CFR Part 261, Subpart D.

These two (2) categories include "mixture rule" and "derived from rule" wastes which are described below.

- Mixture Rule Wastes: Mixture rule wastes are:
  - a mixture of a solid waste and a characteristic waste unless the mixture no longer exhibits any hazardous characteristic, or
  - a mixture of a solid waste and one or more listed hazardous wastes.

- Derived From Rule Wastes: Wastes subject to the derived from rule include any waste generated from the treatment, storage, or disposal of a hazardous waste, including any sludge, spill residue, or leachate.

Attachment C-B to the WAP contains a list of hazardous wastes which may be received at CHK. The wastes listed in Attachment C-B are referred to by EPA Hazardous Waste Number and by Hazard Code. The Hazard Code is used by EPA to indicate if the waste is

reactive (R), toxic (T), corrosive (C), ignitable (I), an acute hazardous waste (H), or whether the waste exhibits the Toxicity Characteristic (E). The basis for designating these wastes as hazardous is provided in 40 CFR Part 261, Appendix VII.

The Hazardous Waste Numbers further classify the wastes. Hazardous Waste Numbers D001 through D043 refer to the "characteristic wastes." D001 represents wastes that are ignitable in character; D002, those that are corrosive; and D003, those that are reactive. Wastes whose extracts contain concentrations is specific inorganic or organic constituents above a specified level are assigned one of the numbers D004 through D043.

"Listed wastes" include four (4) groups of hazardous waste numbers. Hazardous wastes generated from non-specific industry sources such as degreasing and electroplating operations are listed with numbers beginning with the letter "F" (e.g., F001). Hazardous wastes from specific generating sources such as

petroleum refining are assigned numbers beginning with the letter "K" (e.g., K048). Hazardous waste numbers beginning with "P" or "U" represent waste commercial chemical products and manufacturing chemical intermediates (whether on- or off-specification).

The wastes accepted at CHK will vary considerably in both composition and form. Various organic and inorganic constituents may be present in the wastes. Wastes will be liquid, solid, or multi-phasic. General waste descriptions include hazardous wastes of the following types: contaminated wastewaters, spent catalysts, electroplating wastes, metal-contaminated sludges, spent-solvent residuals, off-specification chemicals, and a variety of other waste types.

Each waste stream will be characterized prior to acceptance for management at the facility following the procedures described in Section 5.0 of the WAP. This pre-acceptance characterization will be used to determine the acceptability of waste streams for management at CHK. Profiles and other analytical data (as required) are maintained in the operating record for three years or longer.

- Waste Prohibited from Management: Materials which will not be accepted for management at CHK include, but are not limited to, the following.

  - Dioxin containing hazardous wastes identified by EPA Hazardous Waste Numbers F020, F021, F022, F023, F026, F027 and F028.
  - Regulated radioactive wastes and materials.
  - Infectious medical wastes.
  - TSCA regulated PCBs.

C-1a Receiving and Acceptance Criteria: 40 CFR 264.13(a), 264.172, 264.177, 264.191(a), 270.15(b)(1) and (d)

Prior to accepting a waste stream for management at CHK, the waste will be subject to the pre-acceptance procedures. The pre-acceptance procedures are described in Section 5.0 of the WAP. As part of these procedures, each waste stream will be evaluated for acceptability for management at CHK. The evaluation will be based on the characterization provided by a review of information

about the waste as provided by the generator, or the value of, or a range of values for, a set of material parameters. A rationale for the selection of these parameters is provided in Section 2.0 of the WAP.

Waste shipments arriving at the facility for management will be subject to the incoming load procedures. The incoming load procedures are described in Section 6.0 of the WAP. As part of these procedures, each waste stream will be evaluated for conformity with the description of the waste determined during the pre-acceptance procedures.

There are several sampling and analysis considerations with respect to the management of wastes at CHK. These are described in Sections 6.0 and 7.0 in the WAP. These considerations include identification of waste wit the characteristics of ignitability, corrosivity, or reactivity; waste which may be incompatible with other wastes; and waste which may be incompatible with the container or tank in which it is stored.

C-2 Waste Analysis Plan: 40 CFR 264.13(b) and (c), 268.7, and 270.14(b)(3)

A copy of the WAP is provided as Appendix C-A. The WAP describes the procedures used to obtain chemical and physical information and data on the wastes to insure proper management and conformance with applicable land disposal restrictions. These procedures include:

- pre-acceptance procedures (Section 5.0 of the WAP);
- incoming load procedures (Section 6.0 of the WAP); and
- treatment, storage, and other management considerations (Section 7.0 of the WAP).

C-2a Parameters and Rationale: 40 CFR 264.13(b)(1)

General waste characterizations or profiles will first be developed by determining the value of, or the range of values for, a given set of parameters. These parameters are referred to as "mandatory' parameters. The list of mandatory parameters for the pre-acceptance and incoming load procedures is provided in Section 2.0 of the WAP.

In addition to performing analysis for the mandatory parameters, the values of other parameters may be determined at any time prior to, or during, management of the waste at CHK to more fully define waste characteristics. Since these parameters are discretionary, they are referred to as "supplemental" parameters. Examples of supplemental parameters are provided in Section 2.0 of the WAP.

The rationale for selecting waste characterization parameters used during pre-acceptance and incoming load procedures is also provided in Section 2.0 of the WAP.

C-2b <u>Test Methods:</u> 40 CFR 264.13(b)(2)

The typical analytical methods used to obtain the values of the mandatory parameters are described in Section 3.0 of the WAP. As new analytical procedures are developed, these procedures may be adopted and the WAP updated accordingly, as provided in 40 CFR 270.42.

C-2c Sampling Methods: 40 CFR Part 261, Appendix I, and 264.13(b)(3)

Section 4.0 of the WAP presents methods to be utilized by CHK to obtain a representative sample of wastes. These methods will apply to waste generated off-site (when sampled by LES) as well as facility generated waste. Discussions of the circumstances under which the sampling will be performed are presented in Sections 5.0 through 7.0 of the WAP. The specific sampling methods selected are dependent on both the nature of the waste and the type of container or tank that the waste is in.

Other considerations with respect to sampling are also described in Section 4.0 of the WAP. These other considerations include:

- Sampling Safety Precautions;
- Sampling Method References;
- Sampling Locations;
- Sampling Equipment;
- Frozen Shipments or Samples;
- Cleaning of Sampling Apparatus;
- Management of Samples After Analysis;
- Remote Project Sampling and/or Analysis;

- Lab Packs;
- Nonhazardous Wastes; and
- Vitrified, Cemented, and Other Materials Exhibiting High Structural Integrity.

C-2d <u>Frequency of Analysis:</u> 40 CFR 264.13(b)(4)

An analysis of the wastes may be conducted at selected management stages including the following.

- Before a waste stream is accepted (pre-acceptance);
- When a waste arrives (incoming load);
- At selected management stages (in-process); and
- A minimum of every two years (recharacterization).

The decision to accept a waste for management at CHK will be in part based on a characterization or profile of the waste. At a minimum, this characterization is accomplished through knowledge of the waste or laboratory analysis of the waste during the pre-acceptance procedure. CHK will recharacterize incoming waste streams at least every two years to verify that the original

characterization of the waste is still accurate. Any incoming load accepted at CHK must have been characterized (or recharacterized) within the

last twenty-four (24) months. A sample of an incoming load may be used for the recharacterization. CHK may also repeat the pre-acceptance characterization if:

- a generator notifies that the process generating the waste has changed;
- the incoming load is outside of the acceptance tolerance ranges provided in the WAP, or
- it is suspected that a particular waste shipment differs from the pre-acceptance characterization.

Any waste characterization or recharacterization that assigns or removes a hazardous waste characteristic code for a Kansas generated waste shall be performed by a Kansas certified laboratory in accordance with KAR 28-31-4(b)(3).

C-2e <u>Additional Requirements for Wastes Generated Off-site:</u> 40 CFR 264.13(b)(5), 264.13(c), and 264.73(a) and (b)

Using the information available from the generator, CHK will develop a characterization or profile of the waste stream during

the pre-acceptance procedures. The activities involved with characterizing a waste for pre-acceptance purposes are provided below; additional description is provided in the WAP.

- Requirements of the Generator: The generator of a waste stream is required to provide information on the

properties of the waste or the process generating the waste as described in Section 5.0 of the WAP.

- Analysis for Parameters (Mandatory and Supplemental): CHK may confirm certain waste characterization data supplied by the generator by analyzing the representative sample(s) of the waste for one or more of the mandatory or supplemental pre-acceptance parameters.

- Evaluation: After completing the pre-acceptance waste characterization, the acceptability of the waste for management at CHK will be determined. This determination will be based on permit conditions, availability of proper treatment techniques, and storage and off-site disposal capacities.

C-2f Additional Requirements for Handling Ignitable, Reactive, or Incompatible Wastes: 40 CFR 264.13(b)(6), and 264.17

Ignitable, reactive, and incompatible wastes will be received at CHK. Provisions for the identification of wastes with these

characteristics have been included in the WAP. These provisions are described in Sections 5.0, 6.0, and 7.0 of the WAP.

C-3 Additional Waste Characterization Requirements Pertaining to the Land Disposal Restrictions: 40 CFR 264.13 (a)(1), 264.13(b)(6), 268.7, 270.14(b)(3)

Information submitted by the generator (or a representative of the generator) for the waste streams managed at CHK may include notifications required by 40 CFR 268.7, laboratory analytical data, or information based on knowledge of the waste or of the process generating the waste. This information will be used to determine if the waste is subject to the restrictions on the placement of hazardous waste in a land-based disposal unit (i.e., restricted under 40 CFR Part 268). Provisions for the identification and analysis of wastes which are subject to these restrictions are described in Sections 5.0, 6.0, and 7.0 of the WAP.

Table of Contents

List of Figures iv

List of Tables iv

List of Attachments iv

Acronym Table iv

1.0 Introduction: 1
- 1.1 Purpose: 1
- 1.2 Definitions: 2
- 1.3 Identification of Wastes: 7
  - 1.3.1 Wastes Acceptable for Management: 7
  - 1.3.2 Waste Prohibited from Management: 8

2.0 Analytical Parameters and Rationale: 9
- 2.1 Introduction: 9
- 2.2 Mandatory Parameters: 9
  - 2.2.1 Mandatory Pre-acceptance Parameters: 9
  - 2.2.2 Mandatory Incoming Load Parameters: 12
- 2.3 Supplemental Parameters: 13
- 2.4 Rationale for Parameter Selection: 15
  - 2.4.1 Rationale for Mandatory Parameters: 15
  - 2.4.2 Rationale for Supplemental Parameters: ... 18

3.0 Analytical Procedures: 23
- 3.1 Analytical Methods for Mandatory Parameters: 24
- 3.2 Analytical Methods for Supplemental Parameters: 27

4.0 Sampling Methods: 29
- 4.1 Sampling Safety Precautions: 29-A
- 4.2 Sampling Method References: 30
- 4.3 Sampling Locations: 31
- 4.4 Sampling Equipment: 31
- 4.5 Other Sampling Considerations: 32
  - 4.5.1 Frozen Shipments or Samples: 32
  - 4.5.2 Cleaning of Sampling Apparatus: 33
  - 4.5.3 Management of Samples after Analysis: 33
  - 4.5.4 Remote Project Sampling and/or Analysis: . 34
  - 4.5.5 Lab Packs: 35
  - 4.5.6 Nonhazardous Wastes: 35
  - 4.5.7 Vitrified, Cemented, and Other Materials Exhibiting High Structural Integrity: 36
  - 4.5.8 Regulatory Cleanups 36

5.0 Pre-Acceptance Procedures: 37
- 5.1 Typical Pre-Acceptance Procedures: 38

5.1.1 Waste Characterization: 38
5.1.2 Evaluation: 41
5.2 Recharacterization Frequency: 42

6.0 Incoming Load Procedures: 44
6.1 Typical Incoming Load Procedures: 46
6.1.1 Incoming Load Arrival: 46
6.1.2 Manifest Review: 47
6.1.3 Inspection, Sampling and Analysis: 48
6.1.4 Customer File Review: 52
6.1.5 Incoming Load Evaluation: 52
6.2 Waste Material Transfer and Tracking: 58

7.0 Storage, Treatment or Other Waste Management Activities: 59
7.1 Storage: 60
7.1.1 Storage in Containers: 60
7.1.2 Storage in Tanks: 62
7.2 Treatment: 63
7.2.1 Blending: 64
7.2.2 Particle Sizing: 65
7.2.3 Drying: 66
7.2.4 Drum Scraping and Washing: 66
7.2.5 Treatment in Containers and Tanks, and Container Management Activities: 67
7.3 Off-site Management: 68-A
7.4 Other Considerations: 68-A
7.4.1 Lab Packs: 68-A
7.4.2 Management of Facility Generated Wastes: . 69
7.4.3 Change of Tank or Container Service: 71
7.4.4 Other Management Activities: 72

8.0 Quality Assurance Plan: 73
8.1 Introduction: 73
8.2 Laboratory Organization: 74
8.3 Quality Assurance Objectives: 76
8.4 Sampling and Analytical Procedures: 78
8.4.1 Pre-Acceptance: 78
8.4.2 Incoming Load: 78
8.5 Calibration Procedures and Frequencies: 79
8.5.1 pH/Selective Ion Meters: 80
8.5.2 Balances: 81
8.5.3 Other Instrumentation: 81
8.6 Analytical Procedures: 82
8.7 Data Reduction, Validation, and Reporting: 83
8.8 Internal Quality Control Checks: 84
8.8.1 Methods: 84
8.8.2 Spike Samples: 84
8.8.3 Replicate Samples: 86

8.8.4 Blanks: 87
8.8.5 Calibration Materials: 88
8.9 Performance and System Audits: 89
8.9.1 Performance Audits: 89
8.9.2 System Audits: 89
8.10 Preventive Maintenance: 90
8.11 Procedures Used to Assess Data Precision, Accuracy, and Completeness: 90
8.11.1 Method Spike Recoveries: 90
8.11.2 Replicates (Includes Matrix Spike Duplicates): 91
8.11.3 Instrument Calibration: 91
8.11.4 General Laboratory Parameters: 92
8.12 Corrective Action: 92
8.12.1 Instrument Calibration Checks: 93
8.12.2 Spike Recoveries: 93
8.12.3 Duplicate: 94
8.12.4 Performance Audits: 95
8.12.5 Method Blanks: 95
8.13 Quality Assurance Reports to Management: 96

List of Figures

Figure C.1 Incoming Load Evaluation
Figure C.2 Laboratory Organization

List of Tables

Table C.1 Mandatory Parameters for Waste Analysis
Table C.2 Analytical Methods for the Mandatory Parameters
Table C.3 Acceptable Tolerance Ranges for Incoming Load Analyses
Table C.4 Precision and Accuracy Objectives for the Mandatory Pre-Acceptance and Incoming Load Parameters

List of Attachments

Attachment C-A Typical Forms
Attachment C-B Waste List for Clean Harbors Kansas, LLC
Attachment C-C Analytical Methods
Attachment C-D Excerpts from "Samplers and Sampling Procedures for Hazardous Waste Streams"

Acronym Table

Waste Analysis Plan (WAP)
Clean Harbors Kansas, LLC (CHK)
Kansas Administrative Regulations (KAR)
Resource Conservation and Recovery Act (RCRA)
Title 40 of the Code of Federal Regulations (40 CFR)
Polychlorinated Biphenyl (PCB)
Toxic Substances Control Act (TSCA)
American Society for Testing and Materials (ASTM)
Personal Protective Equipment (PPE)
American Public Health Association (APHA)
Environmental Protection Agency (EPA)
Waste Profile Sheet (WPS)
Quality Assurance/Quality Control (QA/QC)
National Institute of Standards and Technology (NIST)
Relative Percent Difference (RPD)

WASTE ANALYSIS PLAN

1.0 Introduction: 40 CFR 270.14(b)(3), 40 CFR 264.13(b) and (c)

1.1 Purpose:

The purpose of this Waste Analysis Plan (WAP) is to establish sampling and analytical requirements for waste characterization, acceptance, storage, treatment or other management at Clean Harbors Kansas, LLC(CHK). This WAP fulfills the requirements of the Kansas Administrative Regulations (KAR), and 40 CFR Parts 261, 262, 264, 268, and 270. The KAR incorporate, with few additions, the RCRA regulations contained in 40 CFR Parts 260 through 270. Therefore, this section will refer only to the federal regulations.

The WAP is intended to be the primary reference document for waste analysis performed in conjunction with operation (and closure) of Clean Harbors Kansas, LLC. The WAP addresses the following topics.

- Analytical parameters and rationale (Section 2.0).
- Analytical methods (Section 3.0).

- Sampling methods (Section 4.0).
- Pre-acceptance procedures (Section 5.0).
- Incoming load procedures (Section 6.0).
- Storage, treatment or other waste management activities (Section 7.0).
- Quality assurance and quality control (Section 8.0).

Any modifications to this Waste Analysis Plan will be made in accordance with 40 CFR 270.42.

1.2 Definitions:

The terms provided below, applied within the WAP, will have the following meanings.

- Analysis: The term "analysis" means any method by which the value of, or a range of values for, a particular parameter is determined. These methods may include laboratory procedures specified in Attachment C-C. If these procedures cannot be performed, the circumstances will be documented in the operating record and the value of, or range of values for, a

particular parameter will be determined based on knowledge of the waste or of the process generating the waste.

Batch: The term "batch" will refer to some quantity of waste consisting of an individual waste stream or a

mixture of waste streams which have been combined for the purpose of management at Clean Harbors Kansas, LLC.

- Bulk Container: The term "bulk container" will mean any container as defined in 40 CFR 260.10 which has a capacity of greater than 450 gallons (e.g., an intermodal container, end-dump truck, gondola, tanker truck, etc.).

- Container: The term "container," without the qualifier "bulk," will have the same meaning as defined in 40 CFR 260.10.

- Hazardous waste: The definition of "hazardous waste" shall be as defined in 40 CFR 261.3.

- Incoming Load: The term "incoming load" refers to a waste shipment manifested to CHK Upon arrival, the shipment will be staged or placed in a CMU and will remain an incoming load until it is either rejected, trans-shipped to another location, or finally accepted for management at CHK

- Nonhazardous waste: "Nonhazardous waste" refers to "solid waste" as defined in 40 CFR 261.2 which is not "hazardous waste" as defined in 40 CFR 261.3. This may include solid waste such as "empty containers" as defined by 40 CFR 261.7, exempt solid and/or hazardous waste as defined by 40 CFR 261.4, sludge from Publicly Owned Treatment Works, household hazardous waste, garbage, refuse, etc.

- Parameter: The term "parameter" is a specific material property, such as pH, specific gravity, viscosity, etc., or a concentration of a particular constituent of the waste or material.

- PCB(s): The term "PCB(s)" refers to PCB(s) or PCB Item(s) as defined in 40 CFR Part 761.

- Pre-acceptance: The period in which a waste stream's acceptability for management at CHK is evaluated is referred to as "pre-acceptance".

- Radioactive: A "radioactive" material, or "regulated radioactive material," will mean any material as defined by 10 CFR 20.3 or by KAR 28-35-135.

- Solid Waste: The definition of "solid waste" shall be as provided in 40 CFR 261.2.

- Staging: The term "staging" refers to the temporary placement of containers during movement into or out of storage or processing areas. Staging generally occurs for a few hours, and will not exceed 72 hours (three days). Typical staging areas are loading and receiving areas and areas situated adjacent to processing units.

- Suitable Laboratory: A "suitable laboratory" is an analytical laboratory which meets the minimum quality assurance requirements as specified in this WAP, operates under a Quality Assurance/Quality Control

Plan, and uses appropriate SW-846 methods or methods listed in Attachment C-C. Analytical results submitted from off-site laboratories must certify what standard analytical methods were used to obtain the data. If non-standard methods (e.g., methods modified and approved for use at that laboratory) were used,

documentation must be provided to support the validity of the data.

- Technical Manager: The "Technical Manager" refers to the individual, or a designee, responsible for implementation of the WAP.

- Transfer Facility: A transfer facility means any transfer related facility including loading docks, parking areas, storage areas and other similar areas where shipments of hazardous waste are held during the normal course of transportation for a period not to exceed 10 days, between the point of generation and the shipment destination. The transfer facility does not serve as the treatment, storage, or disposal location for that manifest, and is not identified on the manifest. A 10-day transfer facility has the same meaning in this document.

- Trans-Shipment: Trans-shipment is the temporary storage of wastes at the facility for the purpose of shipping the wastes to another facility without on-site processing. Trans-shipped wastes will be subject to

the minimum incoming load procedures, and will be managed on-site in the same manner as all other wastes in storage.

- Typical Form: The "typical forms" provided in Attachment C-A are examples of forms currently in use at CHK. These forms may be revised as needed to respond to changes in regulations and recordkeeping procedures at CHK.

- Value of a Parameter: The "value of a parameter" will refer to the value or a range of values of a parameter as determined by analysis.

- Waste Stream: A "waste stream" will refer to wastes from a single generator with similar characteristics or originating from similar processes. Each waste stream will typically be identified for recordkeeping purposes by a unique number.

1.3 Identification of Wastes: 40 CFR 270.14(b)(2), 40 CFR 264.13(a)

1.3.1 Wastes Acceptable for Management:

Materials acceptable for management at CHK will include solid wastes and hazardous wastes. Attachment C-B contains a list of hazardous wastes which may be received at CHK. The hazardous wastes listed in Attachment C-B are referred to by EPA Hazardous Waste Number and by Hazard Code. The Hazard Code is used by EPA to indicate if the waste is reactive (R), toxic (T), corrosive (C), ignitable (I), an acute hazardous waste (H), or whether the waste exhibits the Toxicity Characteristic (E). The basis for designating these wastes as hazardous is provided in 40 CFR Part 261, Appendix VII.

The wastes accepted at CHK will vary considerably in both composition and form. Various organic and inorganic constituents may be present in the wastes. Wastes will be liquid, solid or multiphasic. General waste descriptions include hazardous wastes of the following types: contaminated wastewaters, spent catalysts, electroplating wastes, metal-contaminated sludges,

spent-solvent residuals, off-specification chemicals, and a variety of other waste types.

Each waste stream will be characterized prior to acceptance for management at the facility following the procedures described in Section 5.0. This pre-acceptance characterization will be used to determine the acceptability of waste streams for management at CHK. Profiles and other analytical data (as required) are maintained in the operating record for three years or longer.

1.3.2 Waste Prohibited from Management:

Materials which will not be accepted for management at CHK include, but are not limited to, the following.

- Dioxin-containing hazardous wastes identified by EPA Hazardous Waste Numbers F020, F021, F022, F023, F026, F027 and F028.
- Regulated radioactive wastes and materials.
- Infectious medical wastes.
- TSCA regulated PCBs.

2.0 Analytical Parameters and Rationale: 40 CFR 264.13(b)(1) and (2)

2.1 Introduction:

A list of parameters has been developed for which each batch of waste will be analyzed. These parameters are referred to as "mandatory" parameters. Mandatory analyses will be performed on each incoming load of waste, except as discussed in Section 6.0. In addition to performing analysis for the mandatory parameters, the values or a range of values of other parameters may be determined at any time prior to, or during, management of the waste at CHK to more fully define the waste characteristics. These additional parameters will be determined at the discretion of the Technical Manager. Since these parameters are discretionary, they are referred to as "supplemental" parameters.

2.2 Mandatory Parameters:

2.2.1 Mandatory Pre-acceptance Parameters:

Prior to acceptance at Clean Harbors Kansas, LLC, a hazardous waste must first be screened to determine if it is acceptable for management at the

facility. This screening, described in Section 5.0, is performed during the pre-acceptance procedures. The pre-acceptance procedures are intended to provide information to allow CHK to decide whether or not to accept a waste stream at the facility. The pre-acceptance phase generally occurs prior to wastes being shipped to the CHK facility.

The pre-acceptance procedures require the collection of information about a waste stream; the information is used to determine if a waste stream is acceptable for management at CHK. The information collected for this purpose includes the values or a range of values of a set of material parameters. Table C.1 contains a list of the mandatory pre-acceptance parameters.

Table C.1
Mandatory Parameters for Waste Analysis

Mandatory Parameter	Pre-Acceptance	Incoming Load
Physical Appearance	%	%
Water Reactivity Screen	%	%
Oxidizer Screen	%	%
pH Screen	%	%
Radioactivity Screen	%	%
Ignitability Screen	%	%
Specific Gravity[1]	%	%
HOC Screen	%	%
Compatibility Evaluation		%

Note: A check (%) indicates that the parameter is mandatory.

[1]Specific gravity will be done on the liquid portion only of otherwise solid waste streams, where liquids are >20%.

2.2.2 Mandatory Incoming Load Parameters:

Upon the arrival of a waste shipment at the facility, procedures will be implemented to confirm that the incoming waste exhibits the same properties as the waste characterized during the pre-acceptance procedures. This confirmation is obtained by analyzing a sample of the incoming load for the same set of mandatory parameters as analyzed during the pre-acceptance procedures. If the results of these analyses are within the allowable tolerance range for each parameter, then the Technical Manager may conclude that the waste shipment essentially has the same properties as the waste characterized during the pre-acceptance procedures. The waste shipment is, therefore, considered to be suitable for management at CHK.

In addition to the mandatory parameters confirming the pre-acceptance evaluation, a compatibility evaluation will be performed on the waste before it is transferred to another tank or container or mixed with other wastes.

The incoming load procedures and the acceptable tolerance ranges for the incoming load parameters are provided in Section 6.0.

Table C.1 provides a list of the incoming load parameters for which the values or a range of values will be determined during the incoming load procedures.

2.3 Supplemental Parameters:

Analyses for supplemental parameters may be performed at any step of the waste management process if the Technical Manager decides that further information on the waste is necessary. Some supplemental parameters are always required for wastes going to specific waste processing units, as defined in Section 2.4.2.

Some examples of supplemental parameters include:

- reactive cyanides screen,
- reactive sulfides screen,
- flash point,
- bulk density,
- total organic halogens,
- heating value,
- chlorides,
- percent ash,
- solvent screen,

- PCB screen,
- normality,
- toxicity characteristic leaching procedure,
- metals analysis, and
- presence of free liquids.

It may be necessary to use additional analyses performed by a suitable outside laboratory to further characterize a waste stream on a case-by-case basis, at the discretion of the Technical Manager.

A summary of some of the supplemental parameters and the rationales for determining their values or range of values are provided in Section 2.4. Parameters previously listed as mandatory (e.g., for pre-acceptance and incoming loads) may also function as supplemental parameters during various stages of waste management.

2.4 Rationale for Parameter Selection:

2.4.1 Rationale for Mandatory Parameters:

The rationale for selecting each mandatory parameter for waste characterization during pre-acceptance and incoming load procedures is provided below.

- Physical Appearance is used to determine the characteristics of a waste which are apparent by visual inspection. This facilitates comparison of the waste with prior waste descriptions. It is also used to detect multiple phases (e.g., liquids and solids or "multiphasic"). A change in physical appearance might be indicative of a change in waste character.

- Water Reactivity Screen is used to determine whether the waste has a potential to react violently with water, form potentially explosive mixtures with water, or generate toxic gases, vapors or fumes in a quantity sufficient to present a danger to human health or the environment when mixed with water. Knowledge of

whether a waste is water reactive is necessary for safe management of the waste.

- Oxidizer Screen is used to identify the potential of the waste to react adversely with organic materials. Identification of a waste as an oxidizer allows for informed decisions regarding safe management of the waste.

- pH Screen is used to indicate potential corrosivity and compatibility with other wastes. pH may not apply to certain wastes (e.g., non-aqueous wastes). A knowledge of pH is necessary in order to arrive at informed decisions regarding waste management.

- Radioactivity Screen is used to identify regulated radioactive waste streams and to prevent their acceptance at CHK.

- Ignitability Screen is used to identify potentially ignitable wastes as a safety precaution and to determine the appropriate management method. During

the pre-acceptance procedures, the screen will be supplemented with a flash point test (e.g., ASTM methods D92 or D93) for those liquid materials where the ignitability screen results in a reading exceeding 500 ppm. During the incoming load procedures, the results of the Ignitability Screen will be used to indicate if the process generating the waste has changed and if the incoming load matches the description on the waste profile sheet.

- Specific Gravity (for liquids) can be used as an aid to determine if the process generating the waste has changed or to prevent the possibility of overloading a tank.

- HOC Screen (Bielstein Test) is used to indicate the presence of halogens and can be used as an aid to determine if the process generating the waste has changed.

- Compatibility Evaluation is performed to determine whether a waste may be safely stored or processed in a tank or container or mixed with other wastes.

2.4.2 Rationale for Supplemental Parameters:

A partial listing of supplemental parameters, and the rationale which the Technical Manager may consider in their selection, is shown below.

- Reactive Cyanides Screen is used to determine whether gaseous cyanides may be produced from the waste. Since the mixing of acids with cyanides must only occur under controlled conditions, a determination of the presence or absence of reactive cyanides will be made to allow the appropriate waste management decisions to be implemented.

- Reactive Sulfides Screen is used to determine whether gaseous sulfides may be produced from the waste. Since the mixing of acids with sulfides must only occur under controlled conditions, a determination of the presence

or absence of reactive sulfides will be made to allow the appropriate waste management decisions to be implemented.

- Flash point is a measure of flammability and may be used to determine proper waste management with regard to safe handling methods or land disposal restrictions. A change in flash point may be indicative of a change in waste character.

- Bulk Density (for solids) can be used as an aid to determine if the process generating the waste has changed or to prevent the possibility of overloading a tank.

- Total Organic Halogens (TOX) determines the concentration of halogenated organic constituents in a material and may be useful as an aid in waste characterization or as an indicator of a change in waste character.

- Heating Value is measured as an aid in waste characterization or to determine if a waste is eligible for fuels blending. The parameter "heating value" is typically measured in units of Btu/lb. Heating value must be performed during pre-acceptance procedures on all hazardous wastes intended for processing through kiln fuel blending.

- Chloride concentration may be indicative of compounds subject to land disposal restrictions. Chloride concentration may also be determined as a final product requirement for fuels blending.

- Percent Ash is used to assist in formulating waste blends.

- Solvent Screen is used to screen for the presence of and, when possible, the concentration of solvents in a waste stream. This information is necessary to make waste management decisions such as whether a waste stream qualifies for solvent recovery or whether land disposal restrictions are applicable. Solvent screen

must be performed during pre-acceptance procedures for all hazardous wastes intended for solvent reclamation.

- PCB Screen is used to screen for TSCA regulated PCB material which is not acceptable for management at

CHK. PCB concentration will be determined at any time that the Technical Manager suspects, or the generator notifies CHK, that PCBs may be present in concentrations greater than or equal to 50 ppm. Once PCBs have been identified in a given waste stream, the PCB screen may become a mandatory parameter for that waste stream.

- Normality is used to determine the neutralization requirements for a strongly acidic or basic material. This test is normally performed on aqueous wastes with a pH of less than two (2) or greater than 12.5.

- Toxicity Characteristic Leaching Procedure (TCLP) enables determination of the concentration of certain constituents in waste extracts and may be used to identify materials which are subject to land disposal restrictions.

- Metals analysis may be performed to determine whether land disposal restrictions are applicable and whether

the waste meets the requirements of the facility which will receive the waste from CHK.

- Presence of Free Liquids is used to determine if a waste contains free liquids. The absence of free liquids would indicate that a container may be stored in an area without secondary containment; or that the waste, if otherwise meeting all treatment requirements under the land disposal restrictions, may be placed in a landfill for disposal without further treatment.

3.0 Analytical Procedures: 40 CFR 264.13(b)(1) and (2)

The typical analytical methods used to obtain the values of the parameters of concern are described in this section. As new analytical procedures are developed, these procedures may be adopted and the WAP updated accordingly, as provided in 40 CFR 270.42.

In some situations, analyses by the CHK laboratory may not be necessary or appropriate. Such situations would include:

- when the laboratory analyses are performed by another suitable laboratory,
- when the analyses and/or information are provided by the generator and provide an understanding of the waste to allow proper storage and handling,
- when a representative sample cannot be obtained (e.g., contaminated debris and equipment, personal protective equipment (PPE), etc.),
- when sampling may not be appropriate (e.g., nonhazardous waste, lab packs, 10-day transfer loads), or

when a representative sample cannot be prepared as specified in the analytical procedure.

In these situations, alternative methods of characterizing the waste will be used. Alternative methods may include information sources such as the Technical Manager's or the generator's knowledge of the waste or of the process(es) generating the waste.

When the generator provides the results of analytical testing performed by an off-site laboratory, the report must include certification of what standard analytical method was used to obtain the results. If a non-standard method was used, documentation must be provided to support the validity of the results. All methods of record will follow approved procedures specified in this Waste Analysis Plan.

3.1 Analytical Methods for Mandatory Parameters:

Analytical methods for the mandatory parameters are listed in Table C.2. The methods include standard test methods from EPA and ASTM. In addition to the standard methods, unique procedures and protocols formulated for the management of hazardous waste by Clean Harbors Kansas, LLC may be utilized. These unique methods, provided in Attachment C-C, have proven to be useful for waste characterization.

Under circumstances where the defined methods may not yield valid data, the Technical Manager may elect to substitute an alternate method for one of those listed in Table C.2 or to modify a method for a particular waste stream. A decision of this sort by the Technical Manager will be documented in the operating record.

Table C.2
Analytical Methods for the Mandatory Parameters

Mandatory Parameter	Methods	Reference/Comments[1]
Physical Appearance	(Refer to Reference/ Comments)	The waste or representative sample is inspected and the physical appearance of the waste is recorded, including: color, physical state (solid, semi-solid, liquids, or multiphasic), and layering (single phased, bi-layered, multi-layered).
Water Reactivity Screen	USPCI-2	CHK Analytical Procedure 2; Screen for Water Reactivity
Oxidizer Screen	USPCI-6	CHK Analytical Procedure 6; Screen for Oxidizers
PH Screen	9040	SW-846 Method; pH of aqueous liquids using a probe where the aqueous phase constitutes at least twenty (20) percent of the total volume
	9041	SW-846 Method; pH of materials using pH indicator paper when method 9040 is not appropriate
Radioactivity Screen	USPCI-7	CHK Analytical Procedure 7; Screen for Radioactivity
Ignitability Screen	HRIW-1	CHK Analytical Procedure 1; Explosivity Screen
	USPCI-5	CHK Analytical Procedure 5; Explosivity Meter Vapor Test
Specific Gravity	D1298	ASTM Method; Specific Gravity of Liquids
HOC Screen	HRIW-2	CHK Analytical Procedure 2; HOC Screen
Compatibility Evaluation	USPCI-25	CHK Analytical Procedure 25; Evaluation of compatibility

Notes:
1. Clean Harbors and CHK Analytical Procedures and a list of the reference documents are provided in Attachment C-C.

3.2 Analytical Methods for Supplemental Parameters:

Supplemental analyses will be conducted using recognized protocols where available, such as those contained in "Test Methods for Evaluating Solid Waste" (SW-846, in effect as of January 31, 1992), or "Standard Methods for the Examination of Water and Wastewater" (APHA), or 40 CFR Part 136 (1991 edition). Attachment C-C contains a list of the most likely of these various standard analytical methods for some of the supplemental parameters.

CHK may also utilize unique procedures and protocols formulated for the management of hazardous waste, which have proven to be useful for waste characterization. Some of the unique Clean Harbors and CHK procedures are presented in Attachment C-C.

If the CHK laboratory is asked to perform other tests by either generators sending wastes to CHK, or waste management facilities receiving wastes from CHK, these tests may follow a protocol established by the EPA or another standards-setting body, or may be custom-designed specifically for that particular client. In such cases, any supplemental tests which directly impact

decisions regarding waste management will be documented in the operating records.

When the Technical Manager decides that supplemental testing is required, the selection of an analytical method will be based upon the property or parameter to be determined and the matrix of the material to be tested. In the selection of an analytical method, it should be noted that the actual analytical procedure used is identical in many cases, regardless of the matrix of the material, only the extraction and preparation steps are different. Consequently, although there are different method numbers for the analysis of water and solid waste or soils, the analytical procedures are the same. Before the Technical Manager relies on the results of an analytical method for waste management decisions, the proper quality control and quality assurance provisions must be in place for the analytical method.

4.0 Sampling Methods: 40 CFR 264.13(b)(3), 40 CFR Part 261, Appendix I

This section presents methods to be utilized by CHK to obtain a representative sample of wastes. These methods will apply to waste generated off-site (when sampled by CHK) as well as facility-generated waste. Samples received for pre-acceptance analysis are typically sampled by the generator or his agent at the point of origin of the manifest, although CHK or Clean Harbors may, on occasion, serve as the generator's agent to perform the sampling. Incoming load samples are typically taken by CHK personnel at the CHK facility, except when a shipment from Clean Harbors or CHK is sampled at the point of origin (see Section 4.5.4). Discussions of the circumstances under which the sampling will be performed are presented in Sections 5.0 through 7.0. The specific sampling methods selected are dependent on both the nature of the waste and the type of container or tank that the waste is in, and will be decided upon prior to sampling.

4.1 Sampling Safety Precautions:

Because of the potential for exposure to hazards, personnel will wear, at a minimum, safety glasses, gloves, hard hat, and protective clothing while sampling. Personnel may check the waste profile sheet and other pre-acceptance characterization data, manifest, or other documents to be familiar with the wastes and ensure that necessary precautions are taken prior to

beginning sampling. Additional protective equipment such as faceshields, respirators, etc., will be used as needed.

4.2 Sampling Method References:

Generally, sampling will be performed using methods described in: "Test Methods for the Evaluation of Solid Waste, Physical/Chemical Methods" (SW-846, in effect as of January 31, 1992); "Handbook for Sampling and Sample Preservation of Water and Wastewater" (EPA-600/4-82-029); "Samplers and Sampling Procedures for Hazardous Waste Streams" (EPA-600/2-80-018); or 40 CFR Part 261, Appendix I (1991 edition). Excerpts from "Samplers and Sampling Procedures for Hazardous Waste Streams" are included for reference in Attachment C-D. Due to the variability of waste, personnel performing the sampling may be required to alter a particular method for some situations. In all cases, the goal of the sampling effort will be to obtain a sample that is representative of the whole.

4.3 Sampling Locations:

Samples will be taken from a variety of locations and therefore will require a variety of sampling techniques and devices. Waste may be sampled from storage vessels, such as a tank, drum, roll-off box, lugger box, tanker or dump-type truck. Waste may also be sampled from other locations, such as a sump.

Accessibility to the waste will influence the number of and the location from which samples can be taken. Where practical, samples will be taken from locations displaced both vertically and horizontally. The number of samples required depends on the distribution of the waste components in the storage vessel. A number of samples may be taken to address variations in the waste. If examination indicates stratification in the waste, then each layer may be composited in proportion to its estimated volume.

4.4 Sampling Equipment:

Sampling equipment will be used to obtain a representative sample. This equipment may include a Coliwasa, glass rods, Bacon

bomb, etc. Because each sampling situation is unique, the equipment and applications may have to be modified to ensure that a representative sample is collected and its physical and chemical integrity are maintained. The personnel performing the sampling will be responsible for determining the appropriate sampling apparatus.

4.5 Other Sampling Considerations:

4.5.1 Frozen Shipments or Samples:

Loads may arrive at CHK at temperatures which prevent a representative sample from being obtained. Under such circumstances, the wastes will be allowed to warm until such time as sampling can be performed. Sampling can occur at any temperature provided a representative sample can be obtained.

4.5.2 Cleaning of Sampling Apparatus:

Sampling tools are visually checked to make sure that they are clean before the sample is taken. When necessary, cleaning of sampling equipment is performed as follows.

- Solids are removed to the maximum extent possible with a brush, cloth, or other means;
- the sampling tool is washed with clean water or appropriate cleaning solution; and
- solids and rinsate are collected and managed as facility generated waste.

4.5.3 Management of Samples after Analysis:

Samples from waste streams will be either returned to the generator or managed appropriately. For example, the sample from a waste stream approved for a given treatment may be similarly treated. Wastes and/or samples from the CHK laboratory may be consolidated either in a container or a lab pack as appropriate. CHK laboratory wastes will be managed on site or shipped off-site for alternate treatment as appropriate. For accepted waste streams the representative sample, if one was obtained,

will normally be retained by CHK for at least 30 days. Generator supplied samples of waste streams which are unacceptable for management at CHK are returned to the generator (or a representative of the generator), managed on site, or shipped to an alternate waste management facility.

To facilitate this process of accumulating samples and laboratory waste, samples which are approved for the same management process may be consolidated, if compatible, and managed under the provisions of 40 CFR 262.34.

4.5.4 Remote Project Sampling and/or Analysis:

In cases where off-site sampling or analysis is used for the purpose of satisfying the incoming load procedures, a SK representative will be at the site to ensure that the provisions of this WAP are observed. For example, this may occur at remediation projects managed by Clean Harbors.

4.5.5 Lab Packs:

Since lab packs contain small quantities of multiple wastes, they are not sampled. Instead, the generator or a representative of the generator will provide an inventory of the contents of the lab pack. The inventory will be reviewed for incompatibility of contained wastes and land disposal restrictions. CHK may sample bulked-up lab pack wastes according to container sampling procedures.

4.5.6 Nonhazardous Wastes:

Nonhazardous wastes will be accepted at CHK. In order for a load of nonhazardous waste to be accepted, a nonhazardous waste form or a hazardous waste manifest must be completed by the generator. Typical examples of these forms are provided in Attachment C-A. The nonhazardous form utilized has the generator or treatment facility attest that the material is nonhazardous. These wastes will be inspected for physical appearance, at a minimum. Other information, including analytical data, will be obtained as necessary to ensure proper waste management.

4.5.7 Vitrified, Cemented, and Other Materials Exhibiting High Structural Integrity:

There are several wastes which do not allow representative sampling. For example, structural steel, tanks, pipe, cement, glass, filter cartridges, and several other materials will be managed which do not allow the implementation of normal sampling protocols. Of necessity, these materials must be managed on a case-by-case basis.

4.5.8 Regulatory Cleanups

When a regulatory agency, or their contractor, undertaking a clean-up of a site (e.g., EPA or Kansas Department of Health and Environment) has established the waste characterization information, CHK may utilize this characterization in lieu of pre-acceptance analytical and incoming load analytical information.

5.0 Pre-Acceptance Procedures: 40 CFR 270.14(b)(2), 40 CFR 264.13(a), and 40 CFR 264.12(a)

The purpose of the pre-acceptance procedures is to determine if a waste is acceptable for management at CHK. If it is determined that the waste can be managed at CHK, the generator is notified and may schedule shipment of the waste.

All hazardous wastes generated off-site and proposed for management at CHK will be subject to these procedures. For situations where sampling and analysis cannot be performed due to the nature of the waste or container (e.g., PPE, debris, lab packs, etc.), the circumstances will be documented in the operating record and proper management of the waste will be determined by knowledge of the waste or of the process generating the waste.

5.1 Typical Pre-Acceptance Procedures:

5.1.1 Waste Characterization:

The decision to accept a waste for management at CHK will be in part based on a characterization or profile of the waste. At a minimum, this characterization is accomplished through knowledge of the waste or laboratory analysis of the waste for the mandatory pre-acceptance parameters. The Technical Manager may rely on a characterization performed at another facility owned or operated by SK in lieu of duplicating the characterization at CHK.

The activities involved with characterizing a waste at CHK for pre-acceptance purposes are provided below.

- Requirements of the Generator: The generator of a waste stream will be required to provide some information on the properties of the waste. The information may include:
    - the chemical and physical data requested on the Waste Profile Sheet (WPS) (A typical WPS

is shown in Attachment C-A. An equivalent form approved by CHK may be used in lieu of a WPS.),

- results from the analysis of a representative sample by a laboratory with an appropriate QA/QC plan. If the generator supplies the results of analysis for the mandatory parameters, a representative sample from the generator may not be required, and/or
- any other supporting documentation as appropriate (e.g., Material Safety Data Sheets, notification and/or certification as required by 40 CFR Part 268).

CHK will review the information provided by the generator for acceptability. If necessary or appropriate, CHK will request additional information from the generator including process information, a representative sample, or the results from other analyses. When the information is considered acceptable, the waste will be evaluated for management

at the facility (Refer to Section 5.1.2). The information will be considered acceptable when a reasoned evaluation of the waste can be performed in accordance with Section 5.1.2.

- Analysis for Parameters (Mandatory and Supplemental): CHK may confirm certain waste characterization data supplied by the generator by analyzing the representative sample(s) of the waste for one or more of the mandatory pre-acceptance parameters.

  The Technical Manager may also require that analyses be performed for certain supplemental parameters. Analyses for these supplemental parameters may be performed at CHK or a suitable off-site laboratory.

  The need for analyses for the supplemental parameters will be based on:

  - the completeness of the chemical and physical characterization of the waste,
  - the completeness of the description of the process generating the waste,
  - the results of pre-acceptance analyses performed at CHK or by another suitable laboratory, and
  - the Technical Manager's experience and

judgement.

Pre-acceptance analyses will not be required for lab packs. An inventory of the contents of each lab pack will be provided by the generator or his representative. The inventories will be reviewed for compatibility of contained materials and land disposal restrictions.

5.1.2 Evaluation:

After completing the pre-acceptance waste characterization, the Technical Manager will determine the acceptability of the waste for management at CHK. This determination will be based on permit conditions, availability of proper treatment techniques, and storage and off-site disposal capacities.

The Technical Manager is responsible for making the decision to accept or reject a waste based on an evaluation of the information and data gathered during pre-acceptance procedures. After this decision is made, the generator will be notified of

the decision to approve the waste for management, to approve the waste under certain conditions (e.g., packaging, etc.), or to reject the waste for management.

If the waste is to be received from a foreign source, the Kansas Department of Health and Environment will be notified in writing at least four weeks in advance of the first scheduled shipment, in accordance with 40 CFR 264.12(a). This notification will include the generator's name, address, quantity of hazardous waste, and EPA hazardous waste code(s).

5.2 Recharacterization Frequency:

CHK will recharacterize incoming waste streams at least every two (2) years. Any incoming load accepted at CHK must have been characterized (or recharacterized) within the last twenty-four (24) months. A sample of an incoming load may be used for the recharacterization. CHK will also repeat the pre-acceptance characterization if:

- a generator notifies CHK that the process generating the waste has changed,

- the incoming load is outside of the acceptable tolerance range provided in Table C.3 (unless the discrepancy can be resolved as described in Section 6.1.5, Incoming Load Evaluation), or
- the Technical Manager suspects that a waste shipment differs from the pre-acceptance characterization (the generator may be contacted prior to recharacterizing the waste).

In the event that a Kansas-generated waste changes such that the recharacterization involves assigning or removing a waste code, the related analyses will be performed at a Kansas certified laboratory.

6.0 Incoming Load Procedures: 40 CFR 270.14(b)(2), 40 CFR 264.13(a), (b)(4), and (c)

The purpose of these incoming load procedures is to determine if a waste shipment (incoming load) arriving at CHK matches the characterization of waste on which the pre-acceptance evaluation was based. Wastes which correspond to the waste characterization documented during the pre-acceptance procedures may be accepted for management at CHK. This section provides the procedures for determining if a significant difference exists between the pre-acceptance characterization and the waste shipment.

On occasion, a generator will ship a load before pre-acceptance procedures are completed. Incoming loads that have not been qualified through pre-acceptance procedures prior to arrival at CHK will not be accepted until the pre-acceptance procedures described in Section 5.0 have been performed. In the case of loads of containers, the containers may, before or after they are unloaded from the transport vehicle, be sampled for analysis of the mandatory pre-acceptance parameters. The containers will remain staged in one or more container management unit(s) until

the pre-acceptance procedures are completed. Under these circumstances, the same analytical results may be considered both as pre-acceptance and incoming load analyses.

The procedures described in this section apply to hazardous waste generated off-site which will ultimately be managed at CHK. Facility generated wastes are not subject to the incoming load procedures described in this Section. Wastes received at CHK only for the purpose of transfer to another facility in accordance with 40 CFR 263.12 and 264.1(g)(9) are also not subject to the incoming load procedures. These 10-day transfer wastes may remain at the site for a period not to exceed ten (10) days prior to continuing the journey to the designated treatment, storage, or disposal site. 10-day transfer loads remain "in transit" during the entire stay at the site. These wastes may be off-loaded and transferred to another vehicle. Because these 10-day transfer loads are never accepted into the CHK waste management system, no analyses are performed on the loads. However, 10-day transfer wastes are tracked using the Waste Tracking System. 10-day transfer loads generally remain on the truck or in the loading dock areas, although the wastes may occasionally be placed in a CMU temporarily prior to reshipment off-site. At no time will the total waste volume in any CMU exceed the permitted storage capacity.

For situations where sampling and analysis of an incoming load cannot be performed due to the nature of the waste or the containment vessel (e.g., debris, PPE, lab packs, etc.), the circumstances will be documented in the operating record and proper management will be determined by knowledge of the waste or of the process generating the waste.

6.1 Typical Incoming Load Procedures:

The events which typically occur during the incoming load procedures are described below. The events discussed are not necessarily performed in the sequence presented.

6.1.1 Incoming Load Arrival:

Incoming load evaluation will be performed after arrival of the waste shipment at CHK. An incoming load will remain in the receiving area, except for containers to be managed in the container management units, until any significant discrepancies have been resolved. Shipments of containers may be sampled before they are unloaded, or they may be unloaded at the container management units for staging and sampling.

Wastes may remain on the transport vehicle or in a staging area for up to 72 hours while awaiting completion of acceptance procedures. If incoming load procedures are not completed within that time, the containers will be placed in a container management unit, segregated according to the

information available from the manifest, Waste Profile Sheet, and other documentation. In the event that subsequent information (e.g., analytical results) indicates that the material is incompatible with the other wastes stored in that CMU, the container will be moved to an appropriate CMU. The Waste Tracking System will record the location and date of acceptance for each container received at the site.

6.1.2 Manifest Review:

Incoming waste shipment manifests are subjected to a review for completeness. A typical manifest is shown in Attachment C-A. Information about the generator, the waste, and the piece count, volume, or weight will be checked. A significant discrepancy between the manifest and the actual shipment is defined as:

- for bulk waste, variation greater than ten (10) percent weight or volume,
- for batch wastes, any variation in piece count, such as a discrepancy of one drum in a truckload, or
- any significant variation in waste type.

Discrepancies may be resolved by a review of records maintained at CHK or through discussion with the generator, transporter, or sales representative. Corrections of significant discrepancies in the manifest are made with the concurrence of the generator and are initialed and dated by the individual making the corrections.

If a significant discrepancy in waste type cannot be resolved, the affected wastes will be rejected. Causes for rejection can include, but are not limited to, variance from expected constituents and constituent concentrations and variance from expected physical characteristics. If a significant discrepancy in piece count or volume cannot be resolved, the load may be accepted or rejected. If the load is accepted, CHK will notify the Kansas Department of Health and Environment in accordance with 40 CFR 264.72(b), and will submit an exception report. The decision to reject a waste load is made by the Facility Manager or his designee. If a waste is rejected, it will be returned to the generator or sent to an alternative facility agreed to by CHK and the generator.

6.1.3 Inspection, Sampling and Analysis:

Analysis will be performed as outlined in this WAP on the incoming load for the parameters listed on Table C.1. The methods of sampling and sample preparation will vary depending on the physical state of the waste and the type of container in which the waste shipment arrives. Samples for incoming load

analysis, when sampling is appropriate, will normally be retained at the CHK laboratory for at least seven (7) days after analysis.

- Bulk Loads of Liquid, Solid, or Multiphasic Wastes: Bulk liquid, solid, or multiphasic wastes shipped to CHK will be inspected and, where appropriate, sampled for laboratory analysis. The values of the incoming

load parameters will be determined by analysis of a sample of the shipment.

An exception to this will be where multiple bulk loads of a single waste stream are received from a single source (e.g., a major site clean-up of contaminated material or a large volume generator). These shipments may arrive by rail in rail cars, or by road in bulk containers (e.g., end-dump trucks or intermodal containers). In either case, samples from twenty (20) percent of the bulk containers will be analyzed for the incoming load parameters. These samples may be obtained either when the wastes are transferred into the bulk containers or at the CHK facility prior to unloading. The contents of bulk containers will, at a minimum, be inspected for physical appearance.

Containers: Each shipment of containers is checked against the manifest to confirm piece count and type of container. Containers will be checked for proper labelings and markings and to see that they are in acceptable condition (i.e., not deteriorated, damaged,

corroded, leaking or bulging). Containers may be sampled before or after off-loading.

During the incoming load procedures, the contents of a minimum of ten (10) percent of the containers from a waste stream will be sampled. The samples may be composited and the values of the incoming load parameters will be determined by analysis of the composite.

One exception to this will be where multiple waste streams from one generator have been pre-accepted into the same management category. A composite of a minimum of ten percent of all such drums or other containers on the same incoming load may be made for the incoming load analysis.

Another exception will be multiple generators who produce similar waste streams by a similar process. When such waste streams are received on the same incoming load, the contents of a minimum of ten percent of all containers from such waste streams will be

sampled and composited. The values of the incoming load parameters will be determined by analysis of the composite as if the composite were from a single generator's waste stream.

In order to achieve more representative sampling, waste streams accepted for particle size reduction (e.g., shredding or granulating) may be sampled for incoming load analysis after such reduction has been accomplished. These waste streams will be evaluated for ignitability and reactivity considerations, including analytical screens for these parameters when possible, prior to particle sizing.

Containers will remain closed except during sampling procedures and when adding or removing wastes. Additional container storage and treatment considerations, including provisions for visual inspection, are provided in Section 7.1.1.

6.1.4 Customer File Review:

The hazardous waste manifest or nonhazardous waste form will be compared to information contained in the customer file for items such as:

- approved management method(s),
- required analyses,
- recommended supplemental analyses (if any),
- pre-acceptance analysis data,
- available test results from previous incoming loads, and
- any other pertinent information.

6.1.5 Incoming Load Evaluation:

Analytical results for the incoming load parameters are recorded on the CHK Material Receipt Record (typical form shown in Attachment C-A) and compared to the corresponding pre-acceptance analysis. Table C.3 lists the parameters whose values are determined during incoming load procedures, and the acceptable range of variation, between the value of a parameter determined

at pre-acceptance and at incoming load, within which a waste may be accepted. For each parameter, if the difference between the values of a parameter determined during pre-acceptance and incoming load procedures is within the acceptable range, the waste shipment will be deemed the same (conformance) as the waste accepted for management at CHK during the pre-acceptance procedures. If the difference between the values of a parameter determined during the pre-acceptance and incoming load procedures is outside of the acceptable range, the waste shipment will not be deemed the same (nonconformance).

Table C.3
Acceptable Tolerance Ranges
for Incoming Load Analyses

Parameter	Tolerance Range
Physical Appearance	Similar waste character[1]
pH Screen[2]	+/- 1.5 pH units
Specific Gravity	+/- 15% (liquids and sludges)
Water Reactivity Screen	positive to negative, only[3]
Ignitability Screen	positive to negative, only[3]
Radioactivity Screen	negative is the only acceptable result
Oxidizer Screen	positive to negative, only[3]
HOC Screen	positive to negative, only[3]

Notes:

1. The inherent variability of the physical appearance of wastes does not allow quantification of the tolerance range. The inspection for physical appearance is performed during the incoming load procedures to indicate a significant change in the nature of the waste (e.g., a liquid rather than a solid) which may indicate a change in the composition or the process generating the waste.
2. The pH is determined for aqueous liquids or free liquids associated with solids or multiphasics.
3. If the results of the screen are positive during the pre-acceptance procedures, the results during the incoming load procedures can be either positive or negative. If the results of the screen are negative during the pre-acceptance procedures, the results during the incoming load procedures can only be negative (i.e., a positive result is outside of the acceptable tolerance range).

An apparent nonconformance may be resolved before the waste is rejected or recharacterized. One or more of the following sources of information may be used to resolve an apparent nonconformance:

- the generator's knowledge of the waste or of the process generating the waste,
- the Technical Manager's knowledge of the waste or of the process generating the waste in light of the pre-acceptance characterization and any additional information in the customer file or accompanying the waste shipment (e.g., manifest, Material Safety Data Sheet, etc.), or
- additional laboratory analysis.

Resolution of any nonconformance will be documented in the operating record. Nonconformance of waste shipments which cannot be resolved will be documented in the operating record. Wastes found to be nonconforming will be rejected or reevaluated prior to acceptance. If the generator concurs with the reevaluation, the waste can be approved for acceptance. If the generator rejects the evaluation, the waste will be returned to the generator or sent to an alternate facility of the generator's

choosing.

Incoming load evaluation is aided by the use of Figure C.1. This figure is intended to serve only as a guide in the decision-making process.

For lab packs, the Incoming Load procedures including a piece count, inspection of drum numbers and identification, and a review of the inventory list provided in the accompanying paperwork to verify that the manifest and pre-acceptance information match.

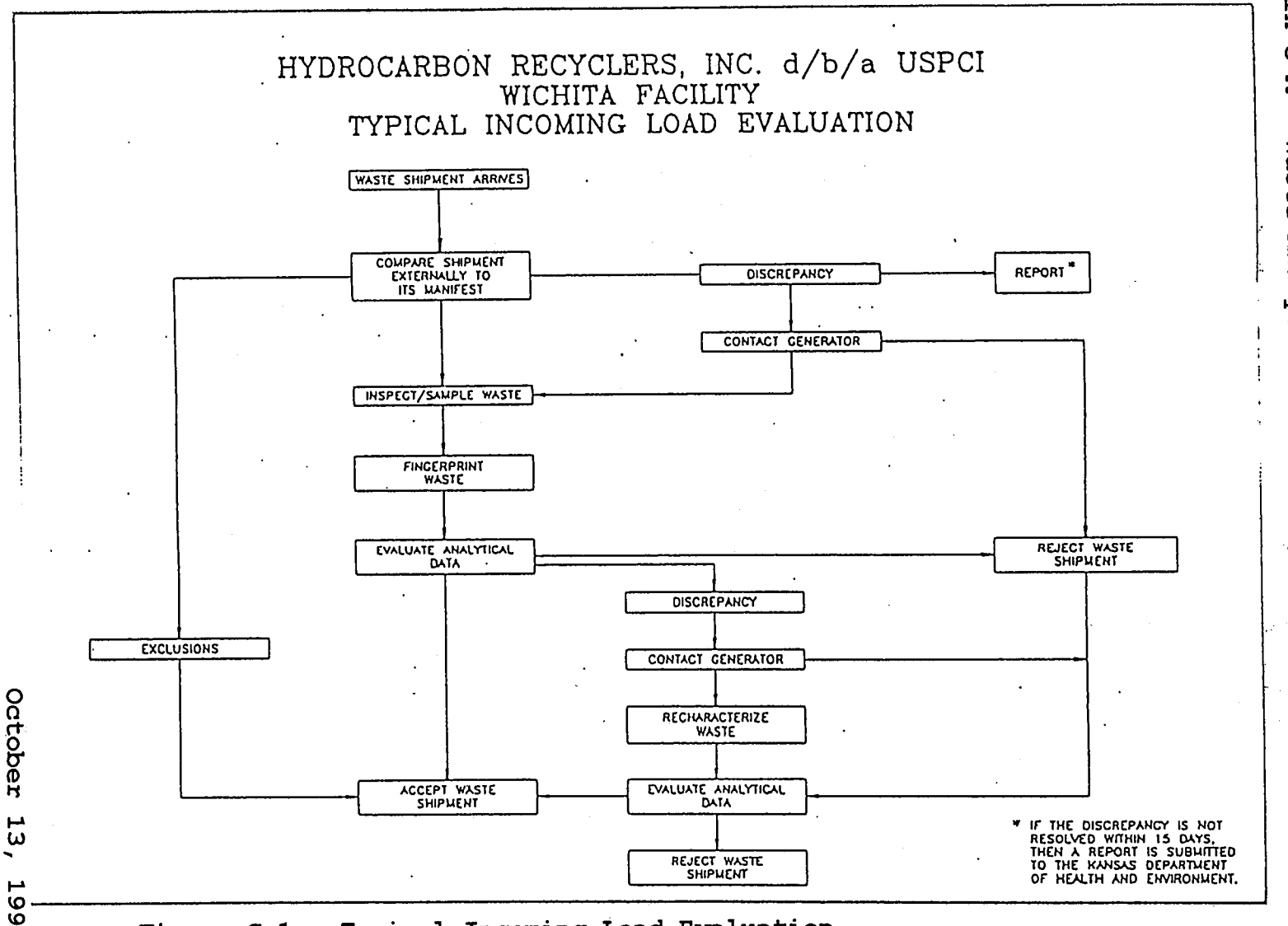

Figure C.1. Typical Incoming Load Evaluation

6.2 Waste Material Transfer and Tracking:

Waste will be assigned and tracked by a unique Identification Number assigned by CHK upon arrival at CHK. Waste tracking information is maintained as part of the operating record. Internal tracking and recording of waste movement includes:

- waste identification,
- arrival date,
- weight and/or quantity of wastes received,
- current and previous storage locations on-site; and
- recording of waste management after receipt.

The Waste Tracking System will also provide a record of manifest information, analytical data, and other relevant information.

A waste tracking report will be generated for each day that waste is moved, and as necessary will be printed and made available to site personnel and inspectors. Historical waste tracking information will be maintained on-site as part of the operating record.

7.0 Storage, Treatment or Other Waste Management Activities:

Management of a given waste within the facility which results in a change of its character may make the waste subject to additional inspection, sampling, and analysis. Many of the analyses needed for storage, treatment or off-site disposal are performed during either the pre-acceptance or incoming load procedures specified in Sections 5.0 and 6.0 of the WAP. Additional analyses may be conducted, before off-site management of the waste, if there is reason to document that the waste may have significantly changed during storage or treatment or to confirm compliance with the restrictions on land disposal contained in 40 CFR Part 268.

The waste management processes for which periodic sampling and analysis may be applicable include:

- Storage, consisting of containers and tanks;
- Treatment, including blending, particle sizing, drying, drum scraping and washing, and treatment in containers and container management activities; and

- Off-site disposal, consisting of shipment of wastes to a landfill, injection well, etc.

The analytical procedures for each of these waste management processes is described separately below. For situations where sampling and analysis cannot be performed due to the nature of the waste or container (e.g., PPE, debris, lab packs, etc.), the circumstances will be documented in the operating record. In this case, the Technical Manager will determine proper waste management based on knowledge of the waste (e.g., an inventory of the contents of a lab pack) or of the process generating the waste.

7.1 Storage:

7.1.1 Storage in Containers:

In addition to the incoming load procedures for containers, the following considerations for storage in containers will be observed.

Visual Inspection: For containers placed in the container management units for storage or treatment at CHK, ten (10) percent of the shipping containers from a waste stream are sampled during the incoming load procedures (this does not apply to wastes which cannot be sampled such as lab packs, debris, etc., or trans-shipped wastes destined to another waste management facility). The exterior of all containers is visually inspected during unloading, and subsequently will be inspected in accordance with the Inspection Plan (Section F). The contents of all containers that are emptied, mixed, or otherwise processed are subject to visual inspection at least once prior to processing.

Storage Areas: Following unloading, hazardous wastes in containers are stored in areas equipped with secondary containment.

Compatibility: Once they have been unloaded, analyzed, and accepted, wastes are segregated to ensure that incompatible wastes are not stored together. Even if

Incoming Load procedures are not completed within 72 hours, containers will be placed into CMUs, segregated according to information from the manifest, Waste Profile Sheet, and other documentation. If subsequent analytical results or other information indicate that the waste may be incompatible with other wastes in that CMU, the waste will be moved into an appropriate CMU.

Waste with Ignitable and Reactive Characteristics: Ignitable and reactive wastes are identified through the pre-acceptance and incoming load procedures described in the WAP and by information submitted by the generator. Wastes identified as reactive will be

managed so as to ensure that these wastes do not contact potentially incompatible wastes. Even if Incoming Load procedures are not completed within 72 hours, containers will be placed into CMUs, segregated according to information from the manifest, Waste Profile Sheet, and other documentation. If subsequent analytical results or other information indicate that the waste may be incompatible with other wastes in that CMU, the waste will be moved into an appropriate CMU.

7.1.2 Storage in Tanks:

In addition to the incoming load procedures for waste in storage tanks, the following considerations will be observed.

- Compatibility: Wastes added to the tanks must be compatible with the contents of the tank and the material of construction of the tank. A compatibility evaluation as detailed in Attachment C-C (USPCI-25) will be performed prior to transferring a waste into a tank.

Waste with Ignitable, Corrosive and Reactive Characteristics: Bulk ignitable, corrosive and reactive wastes are identified through the pre-acceptance and incoming load procedures and by information submitted by the generator (e.g., manifest, notification, etc.). Liquid wastes which exhibit the characteristic of ignitability will be placed in

appropriate tanks for storage and/or treatment at the facility. Reactive wastes will not be placed in the tanks or tank systems for treatment, but may be stored in the tanks if the waste is protected from any material or conditions that may cause the waste to react, or if such storage in the tanks is used solely for emergency purposes.

7.2 Treatment:

Analyses which support the treatment processes available at CHK may be divided into three categories, each with a specific purpose:

- Pre-treatment analyses confirm that the waste falls within the selected process design parameters and may allow improvement of the process conditions;
- In-process analyses are performed as needed to control the process and to monitor progress; and
- Post-treatment analyses may be performed as needed to confirm that treatment is successful and that the characteristics of the process effluent are such that

it can be sent to the next step (e.g., disposal, further treatment, discharge, reuse, etc.).

7.2.1 Blending:

The process of blending waste is performed to produce a mixture which can be used as a supplemental fuel for boilers, industrial furnaces, lime and cement kilns, or similar operations. The blended wastes may also be incinerated. In this process, wastes containing sufficient heating values will be blended with other suitable wastes. Pre-acceptance analyses are used to determine the acceptability of each waste stream for the blending process. Additional analysis for heating value will be performed during pre-acceptance procedures for all hazardous wastes destined for supplemental fuels. The heating value of supplemental fuels sent to BIFs that have not received a RCRA permit for the BIF unit and have not obtained certification of compliance with the BIF requirements will comply with the requirements of 40 CFR 266 or applicable state law, whichever is more stringent.

In-process analyses may be performed to monitor and characterize the intermediate mixture. Post-treatment analyses may consist of those tests necessary to ensure that the blended waste mixture is within the final product parameters. The final product parameters are based on the permits and needs of the facility which will receive the product from CHK. For example, if the facility which will receive the product has specifications for a

minimum heating value and a maximum chlorine content, then the blend requirements will be a function of these specifications.

7.2.4 Drum Scraping and Washing:

The drum scraper enhances removal of viscous liquids and solids from containers during waste processing. The drum washer removes waste residues from emptied drums. Due to the nature of these treatments, supporting analyses are not typically required.

7.2.5 Treatment in Containers and Tanks, and Container Management Activities:

Treatment in containers and container management activities will include the following. Due to the nature of these treatments, supporting analyses are not typically required except as discussed below.

- Lab Pack Container Repackaging: Lab packed wastes may be combined for treatment, recycling, incineration, kiln fuel use, or other off-site management.
- Filtration: Portable filtration units are used to remove particulates from liquid streams.
- Absorption or Solidification: CHK may use non-reactive absorbent material to absorb or solidify small quantities of incidental liquid or sludge in containers of solids. This activity is intended to make the material more amenable to proper transportation or to satisfy the requirements of the disposal facility for a uniform material, not to change the pre-acceptance

management category of the waste. Due to land disposal restrictions, fly ash, cement, or other material will be used to solidify liquids if the material is destined for disposal at a landfill. If absorbents are used, the receiving landfill facility will be notified.

Physical/chemical treatment: CHK may treat wastes in containers or tanks using neutralization, phase separation, blending, stabilization, phase changes, polymerization, or other treatment methods that change the physical or chemical characteristics of the waste. Pre-treatment analyses are used to determine whether a waste is amenable to treatment and, as necessary, to determine the appropriate reagents and mix ratios to ensure safe and complete treatment.

In-process analyses may be performed to monitor and characterize the intermediate mixture. Post-treatment analyses may be used to determine that treatment is complete or to determine that treatment product requirements have been met.

7.3 Off-site Management:

Many of the analyses needed for off-site management are performed during either the pre-acceptance or incoming load procedures. Additional analyses may be conducted if there is reason to document that the waste may have significantly changed during storage or treatment or to confirm compliance with the land disposal restrictions when applicable.

7.4 Other Considerations:

7.4.1 Lab Packs:

Lab Pack inventories will be reviewed during the incoming load procedures for consistency with shipping papers and the manifest, incompatibility of contained materials, and land disposal restrictions. Since lab packs contain many small

quantities of individual materials, they will not be sampled. All lab packs will be visually inspected, and at least ten (10) percent of the lab packs received will be opened and visually inspected. The contents of lab packs that are decanted and bulked into larger containers will then be subject to container sampling procedures as facility generated wastes. A record of all on-site movement of lab pack wastes will be part of the waste tracking system.

7.4.2 Management of Facility Generated Wastes:

Examples of facility generated wastes include:

- sump residues;
- clean-up from spills and decontamination of waste management units;
- floor sweepings from hazardous waste management units;
- wash water;
- residue from in-line basket strainers or other process related ancillary equipment;
- personal protective equipment;

- laboratory wastes;
- tank bottoms;
- used oil;
- other solid waste generated from the management of a hazardous waste; and

- other miscellaneous materials originating from a waste generating process (e.g., solvents or degreasers from the maintenance area, etc.).

Any hazardous wastes generated at the facility will be managed in accordance with the provisions of the WAP (with the exception of the incoming load procedures) and with CHK acting as the generator. Any hazardous wastes generated at the facility that are stored on-site in containers for less than ninety (90) days will be managed in accordance with 40 CFR 262.34.

Where the facility generated waste is traceable to a known waste generating process or segregated storage area (such as a container management unit or an individual tank), traceable codes are carried on CHK wastes. Where the facility generated waste is not traceable, a sample of the waste will be characterized through the pre-acceptance procedures, provided in Section 5.0 of this WAP, to determine proper management. When laboratory analyses are necessary to assign or remove a waste code to site-generated wastes, those analyses will be performed at a Kansas certified laboratory.

Facility generated wastes will be collected and placed in tanks or containers. A compatibility evaluation will be performed if

the facility generated waste is added to a tank or container already containing waste.

7.4.3 Change of Tank or Container Service:

A change in service of a container, tank system, or other equipment (i.e., placing a waste which is incompatible with the previous contents) will only occur if the cleaning procedures described below are followed. The container or tank will be rinsed with a neutral or mutually compatible material. This material can be other wastes. The rinse can also be accomplished by filling the container or tank with other wastes. Upon removal of the "rinse", the container or tank will be considered ready for the change in service. Tank entry and inspection will be performed as necessary. Material in the tank will maintain all listed codes between tank cleanings.

A change in service from hazardous waste to non-hazardous waste treatment or storage will involve slightly different cleaning procedures. The unit will be emptied of waste and cleaned using whatever means necessary (e.g., brush, sweep, scrape, wash,

rinse, etc.) to remove residuals. When the unit shows no visible evidence of contamination, the unit will be determined to be cleaned sufficiently to enable non-hazardous waste use. As an extra precaution, the first three volumes of non-hazardous waste run through the unit following cleaning will be managed as hazardous waste carrying the codes that had been contained in the tank previously. Subsequent batches of non-hazardous waste will be managed as non-hazardous.

For units that are not amenable to the cleaning described above, the facility will run three volumes of waste or a cleaning agent through the unit prior to managing subsequent wastes as non-hazardous. For equipment, the facility will either triple rinse the equipment with a cleaning agent or non-hazardous waste, or will run three volumes of waste or cleaning agent through the equipment prior to managing the subsequent wastes as non-hazardous.

The facility may, on occasion, opt to manage non-hazardous wastes through a hazardous waste unit that has not been cleaned. Under these circumstances, CHK will manage those non-hazardous wastes as hazardous, in accordance with 40 CFR 261.3.

7.4.4 Other Management Activities:

Other waste management activities which will take place at CHK will include:

- kiln fuel solids repackaging, in which solids are transferred into smaller containers that can be used as kiln fuel charges;
- transferring drummed solids into gondolas for safer and more economical transport to landfill facilities where this material will be disposed;
- transferring drummed liquid into tanker trucks for off-site shipment and disposal;
- transferring material from drums that show signs of deterioration to new drums, or transferring incinerables from steel drums to approved poly drums to allow easier incineration; and
- when shipping requirements allow, repackaging friable solids to be disposed in bulk processes into fiber boxes or bags that better accomodate the disposal handling technology.

8.0 Quality Assurance Plan: 40 CFR 264.13

8.1 Introduction:

The QA/QC measures described herein will help to ensure that the data provided by the laboratory analysis performed at or for CHK are technically sound and statistically valid.

The data generated by the laboratory in conjunction with the waste analyses will be used to determine certain parameters of the wastes to be managed at CHK. The handling and treatment procedures and determination of treatment efficacy will be based on these data.

The processing of waste and corresponding analytical requirements during the management of wastes at the facility (i.e., from pre-acceptance characterization through shipment off-site) are described elsewhere in this WAP (refer to Sections 5.0 through 7.0). The terms used in this section will have the same meaning as provided in SW-846 ("Test Methods for Evaluating Solid Waste," EPA, in effect as of Jan. 31, 1992).

8.2 Laboratory Organization:

The lab will generally be organized as illustrated in Figure C.2. This organization may be altered as workloads, equipment, and methodologies change.

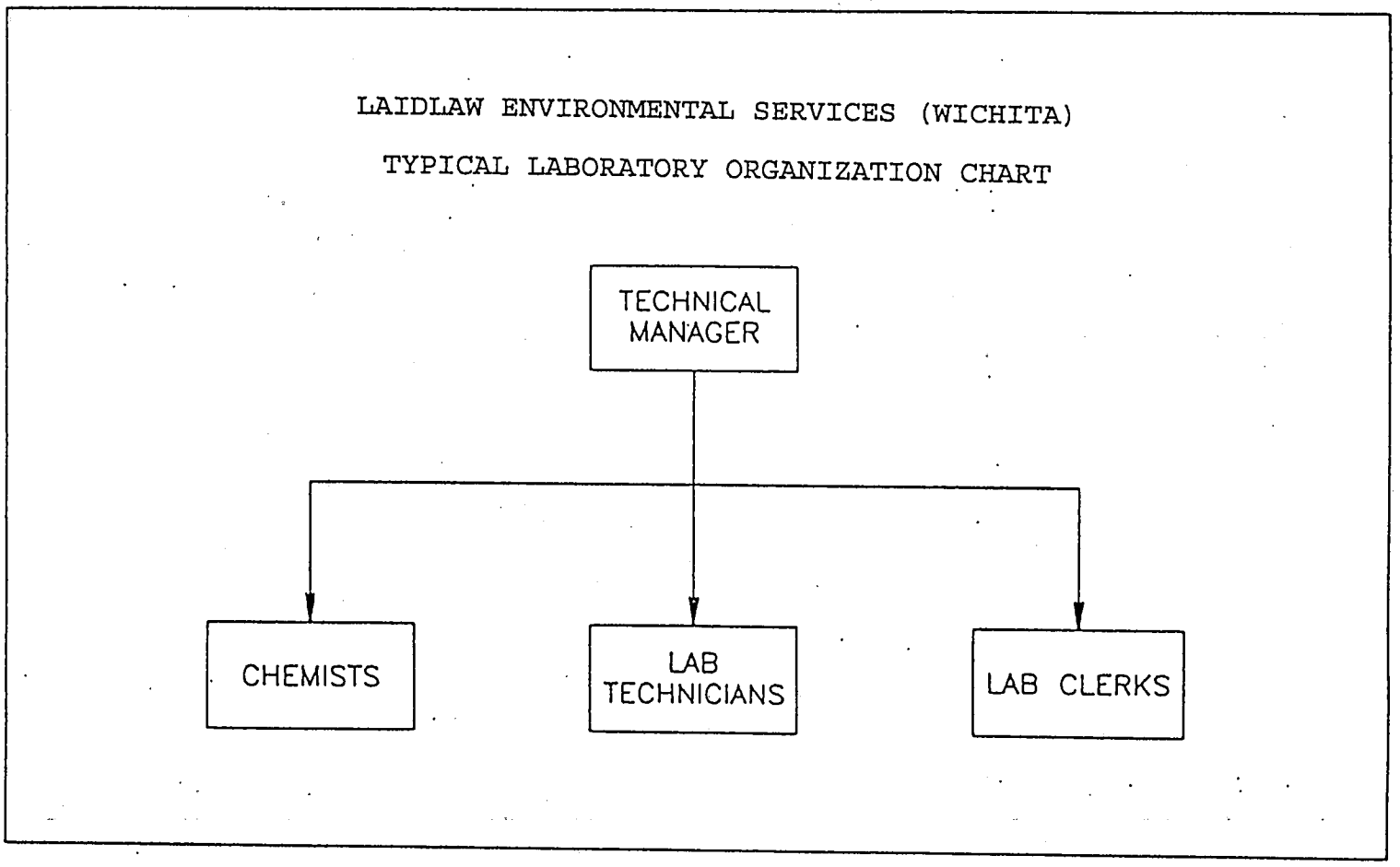

Figure C.2. Typical Laboratory Organization Chart

8.3 Quality Assurance Objectives:

The quality assurance objectives of the WAP are to provide data that are of known and documented quality. The mandatory parameters for which analyses will be performed during the pre-acceptance and incoming load procedures are listed in Table C.1. Table C.4 lists the precision and accuracy goals for the mandatory parameters.

Other supplemental analyses may be performed, as dictated by operational requirements. If supplemental analyses are performed, the quality assurance objectives will be as defined in the analytical method used or as developed by CHK/Clean Harbors Kansas LLC.

Table C.4
Precision and Accuracy Objectives
for the Mandatory Pre-Acceptance and
Incoming Load Parameters[1]
(for Waste Samples)

Measurement Parameter	Precision	Accuracy
Water Reactivity Screen	pos./neg.	N/A
Oxidizer Screen	pos./neg.	N/A
pH Screen	+/-2 pH units	+/- .5 pH units
Radioactivity Screen	pos./neg.	N/A[2]
Ignitability Screen	pos./neg.	N/A
Specific Gravity	+/- 20%	100 +/- 20%
HOC Screen	pos./neg.	N/A

Note:

1. If supplemental analyses are performed the QA/QC defined in the method will be used.
2. CHK cannot evaluate the accuracy data on this test due to lack of calibration materials. The meter will be calibrated at least annually.

8.4 Sampling and Analytical Procedures:

8.4.1 Pre-Acceptance:

Information about a pre-acceptance sample will be entered into a sample record. The sample will be tracked by EPA Identification Number or such other numbers as may be deemed appropriate. This number will be used to track the sample information through the record keeping system. The sample container and any analytical results are to have this number to help track the information about the sample. The parameters for which the values will be determined during the pre-acceptance procedures are provided in Section 2.0. The analytical methods used to determine the values of these parameters are provided in Section 3.0.

8.4.2 Incoming Load:

The procedures for obtaining a representative sample of a waste during the incoming load period is provided in Section 4.0 of the WAP. Section 4.0 includes descriptions of the types of sampling equipment and other considerations regarding sampling.

When a suitable off-site laboratory performs the incoming load analysis, CHK will review the report for certification of what standard analytical method was used to obtain the results. If a non-standard method was used, documentation must be provided to support the validity of the data.

8.5 Calibration Procedures and Frequencies:

Any analytical instrument used to generate data must be calibrated to ensure that accuracy is within acceptable limits. The laboratory analyst is responsible for ensuring that the proper standard is used in performing the calibration.

The frequency of calibration is determined by several factors (e.g., instrument stability, accuracy of data required, methodology employed). Calibration schedules are determined around a nominal period and increased/decreased to fit the requirements of a given test. The calibration schedule is always biased toward an increased frequency.

Unless otherwise stated in this QA/QC Plan, the method and frequency of calibration will be performed as defined in the analytical methods used.

8.5.1 pH/Selective Ion Meters:

The pH meter will be standardized at two points with reference buffer solutions (generally pH 4, pH 7 or pH 10). The calibration will be checked with another buffer from a source different from the calibration buffers; this buffer will be called the Continuing Calibration Verification (CCV) buffer. The CCV buffer will be read after initial or any subsequent calibration reading with an acceptable tolerance of +/- 0.5 pH units from the true value. If the CCV reading is not within the tolerance limit the instrument will be recalibrated. The CCV will be reanalyzed after each sample analysis and recalibration will be required if the reading falls outside of the +/- 0.5 pH units tolerance limit. The pH meter will be calibrated daily prior to the start of any pH measurements.

8.5.2 Balances:

Balances will be of a type appropriate for the accuracy of the weighing to be performed. Balances available may include single pan analytical and single pan top-loading. The analytical balances will be placed on a stable surface and the level checked and adjusted as necessary.

Balance calibrations will be checked with standard weights as appropriate for the routine use of that balance. The results of these checks will be recorded. Performance of any service will be recorded in the instrument log book.

8.5.3 Other Instrumentation:

CHK will include a laboratory equipped to perform, at a minimum, the standard test methods and unique test methods listed in Table C.2. Calibration procedures and frequencies for instrumentation not listed in the WAP will be performed according to the manufacturer's instructions or the applicable reference methodology.

8.6 Analytical Procedures:

Standard analytical methods or methods developed by CHK and Clean Harbors will be used for determining the value of selected parameters. The Technical Manager may make minor modifications to the method, as necessary, while keeping within the intent of the method. The Clean Harbors and CHK analytical methods are provided in Attachment C-C. The standard methods will be obtained from such sources as the following.

- "Test Methods for Evaluating Solid Waste", SW-846, in effect as of Jan. 31, 1992, EPA, Office of Water and Waste Management, Washington, D.C. 20406.
- "Annual Book of ASTM Standards", American Society for Testing and Materials, 1916 Race Street, Philadelphia, Pennsylvania 19103.
- Standard Methods for the Examination of Water and Waste Water", American Public Health Association.
- "Methods for Chemical Analysis of Water and Wastes", EPA-600/4-79-020, EPA, Environmental Monitoring and Support Lab, Cincinnati, Ohio 45268.

- Title 40 of the Code of Federal Regulations, Parts 260-268 (1991 edition).

8.7 Data Reduction, Validation, and Reporting:

In the process of relating a measurement to the concentration of an analyte in the sample, certain guidelines must be followed to avoid distortion of the analytical value through the calculation process. Calculations will follow generally accepted rounding and significant figure rules.

Raw data and calculations are recorded by the analyst on a data sheet. The data sheet will include:

- the test performed;
- sample information such as volumes, weight, and dilutions;
- the analyst's identity;
- the date samples were prepared and/or analyzed; and
- sample results.

8.8 Internal Quality Control Checks:

8.8.1 Methods:

The laboratory uses only quality control methods which are based on those recognized by sources such as National Institute of Standards and Technology (NIST) or American Society for Testing and Materials (ASTM).

8.8.2 Spike Samples:

The sample resulting from the addition of a known amount of analyte into a portion of a previously analyzed sample is called a spike sample. The data resulting from the analysis of the spike sample can be evaluated to determine the accuracy of the analytical method as well as the impact of interferences in the sample. Accuracy is determined by percent recovery comparing the result of the analysis of the spike sample with the results of the original sample. Poor recoveries may indicate interferences in the sample or an inappropriate application of a test for that sample type.

When appropriate, a method should be evaluated using a spike control (method spike). A spike control is a blank matrix (deionized water or similar analyte-free matrix) spiked with a known amount of the analyte(s) of interest. The recovery of the analyte will be maximized under these conditions and will indicate the performance of the method based upon recovery under ideal conditions.

After a method has been proven effective using a spike control, the ongoing process is monitored with spike samples. Spike samples should be analyzed at a minimum frequency of five (5) percent (e.g., one (1) of every twenty (20) samples). For tests that are run infrequently, spikes should be analyzed with every batch. To eliminate systematic errors, the source of the spiking material should be independent of the analytical method's routine calibration material.

After a sufficient number of recoveries for a given parameter have been accumulated, control limits will be established. The precision and accuracy objectives provided in Table C.4 will be updated periodically to reflect the new control limits. Recoveries which exceed the control limits indicate the need to

reanalyze the associated sample batch. Exceptions may be documented by respiking/reanalysis and written comment.

8.8.3 Replicate Samples:

Replicate samples help evaluate the precision of a method and quantify the uncertainty of an analytical value. Replicates can exist in two forms, replicate sample analysis or replicate spiked sample analysis. If no analytes are expected to be found in an analysis it is better to choose to do replicate spiked samples.

Replicate samples, usually a duplicate, are to be analyzed at a minimum frequency of 5% (1 of every 20 samples). For tests which are run infrequently (e.g., once a month), duplicates will be analyzed with each batch.

After a sufficient number of replicates for a given parameter have been accumulated, control limits will be established. The precision and accuracy objectives provided in Table C.4 will be updated periodically to reflect the new control limits. Replicates which exceed the control limits indicate the need to reanalyze the associated sample batch. Exceptions may be

documented by respiking/reanalysis and written comment on the laboratory bench sheet.

8.8.4 Blanks:

Blanks demonstrate that the method is free from interferences or allow the analyst to monitor the background and keep it from reaching levels which would interfere with the detection and quantification of the target analytes. However, not all methods are amenable to blanks (e.g., specific gravity).

Blanks also serve to evaluate the reagents used for contamination. If a reagent is found to be contributing unacceptable quantities of analyte or interference into the measurement system, it needs to be replaced with a higher grade and interferent-free material.

Blanks are to be run once in every twenty (20) samples or with each sample batch, whichever is more frequent. Analyte concentration in the blank should not exceed five (5) times the method detection limit.

If the level of blank contamination is constant and can be controlled, appropriate control limits can be established. Blank values must be recorded on an ongoing basis in this case.

8.8.5 Calibration Materials:

Quantifying the amount of an analyte in a sample is dependent on the reference used. A value can only be as good as the standard to which it is compared. Calibration materials must be of known purity and composition.

When a laboratory standard is created, it must be compared to an existing standard to insure it is within acceptable tolerances. This may involve the use of a Standard Reference Material (SRM) from the National Institute of Standards and Technology (NIST), EPA, or another source which can be traced back to NIST or EPA.

Quality control samples from the EPA or similar agency/organization (e.g., NIST) can be used to evaluate the accuracy of a standard and/or instrument calibration.

8.9 Performance and System Audits:

8.9.1 Performance Audits:

These audits involve the use of blind samples given to an analyst to evaluate the accuracy and precision of an analysis. The term blind (sometimes called single blind) means the analyst is aware that these samples are spikes, but is not aware of the concentration. These audits will be coordinated by the Technical Manager on an annual basis.

Major defects (e.g., a finding of a chemist not analyzing quality control samples, improper calibration procedures being used) which are discovered by these studies are investigated and appropriate corrective action applied.

8.9.2 System Audits:

System audits evaluate the laboratory staff's capability to produce good data. These audits allow the Technical Manager to judge whether or not the quality control practices are being followed and are effective. The system audits are conducted by

the Technical Manager at least annually. The results of these audits require a response from the laboratory staff listing any corrective actions taken to remove defects.

8.10 Preventive Maintenance:

The manufacturer's manual for a particular instrument will be consulted for operating instructions. Maintenance schedules as recommended by the manufacturer will be followed as applicable. Maintenance will be properly recorded in the instrument maintenance record.

8.11 Procedures Used to Assess Data Precision, Accuracy, and Completeness:

8.11.1 Method Spike Recoveries:

Method spike recoveries will be used when testing new procedures and training new analysts. The spikes will usually be made at levels appropriate for the analysis (approximately ten (10) times the estimated detection limit).

Matrix spike samples will be analyzed along with sample batches to estimate the accuracy of the analysis. The recovery will be within the 95% confidence interval (i.e., plus or minus two (2) standard deviations) for historical data.

8.11.2 Replicates (Includes Matrix Spike Duplicates):

Replicates will be analyzed along with sample batches to estimate the precision of the analysis. In lieu of historical data, the Relative Percent Difference (RPD) shall be less than or equal to twenty (20) percent (providing the results are at least ten (10) times greater than analytical detection limit) unless the QA/QC is dictated in the method.

8.11.3 Instrument Calibration:

Instruments will be calibrated with at least three (3) standards (where applicable). Linear regression is the preferred technique to analyze calibration data. In this case the correlation coefficient must meet or exceed the critical value for a 95% confidence interval.

In cases where it might be deemed more suitable to use another method for determining calibration precision (such as computing %RSD of Relative Response Factor values), appropriate confidence limits will be set per method specifications.

8.11.4 General Laboratory Parameters:

Within the laboratory there are numerous other parameters to be evaluated. The objective for any control limits based on historical data will be the 95% confidence interval (mean plus or minus two (2) standard deviations). Other values may have set limits based on method specifications as applicable.

8.12 Corrective Action:

When a control limit is exceeded, the analyst will stop the analysis and investigate the problem. When appropriate, the analyst must demonstrate by analysis that the problem has been corrected. When the cause for the exceedance has been identified and corrected, all data generated by that analysis since the last "in-control" analysis is suspect; all samples analyzed for the failing method should be reanalyzed. If the error can be

attributed to a specific event, all data generated since the last "in-control" event must be reevaluated. If the QA failure can be attributed to sample rather than method failure (e.g., matrix effects), the data from that sample, and like samples are suspect and the data from those samples should be flagged or an alternate method used. In this case, other sample data generated concurrently can be reported. All QA failures and the resulting corrective action must be documented in the operating record.

8.12.1 Instrument Calibration Checks:

An instrument calibration check is the repetitive analysis of a given standard to ensure consistent instrument operation from day to day. Some methods utilize specific procedures to evaluate this check. If the value exceeds control limits, the analysis must be stopped and corrective action implemented.

8.12.2 Spike Recoveries:

Percent recoveries for matrix spikes and/or surrogate spikes are monitored by the analysts and must be within the control limits established by multiple analyses under similar conditions.

Outlier values must be documented with an explanation. Some problems may be deemed an unavoidable part of normal operation. Other problems are indicative of the need for reextraction or reanalysis. Corrective actions will be documented. In lieu of historical data, when sufficient data have been collected, CHK may utilize new control limit criteria.

If matrix effects are suspected as the cause of low spike recovery, the same sample is to be re-spiked once. If the recovery is still low, matrix interference can be assumed. Matrix effects can be overcome by changing the point of spike addition in the case of metals (spiking at the instrument rather than at the processing step), by diluting the sample to overcome the interference, or by the use of an alternate analytical method or technique. If the interference can not be overcome, the data must be flagged and the low recovery must be taken into account in any decision regarding that sample.

8.12.3 Duplicate:

Relative Percent Difference (RPD) criteria are used to evaluate duplicate analyses. The analyst must monitor this value and

document the cause of an outlier. The spiking levels for Matrix Spike/Matrix Spike Duplicate should be at least two (2) times the native levels and at least ten (10) times the Method Detection Limit. Poor precision at low concentrations can contribute significantly to the inaccurate determination of RPD.

8.12.4 Performance Audits:

Performance audits involve the use of blind samples given to an analyst to evaluate the accuracy of an analysis. Major defects which are brought to light by these studies are investigated and appropriate corrective action is taken (e.g., retraining analysts or reanalysis of spike samples). Corrective actions are reported to the Technical Manager.

8.12.5 Method Blanks:

Reagents, process chemicals and laboratory glassware must be monitored for each sample batch to determine their contribution or impact on the analyte concentration. If the Method Blank exceeds the control limit, the analysis must be stopped and the source of the blank contribution identified and corrected. If

the blank problem is identified to be universal, once the problem has been rectified, all samples using those chemicals or glassware must be reanalyzed.

8.13 Quality Assurance Reports to Management:

Oral and/or written reports of the results of inspection and other major problems will be provided to the Technical Manager. Other reports will be provided at his/her request.

Attachment C-A

Typical Forms

February 18,1992

Attachment C-A

Table of Contents:

1. Waste Profile Sheet Instructions (1 page)

2. Waste Profile Sheet (1 page)

3. Uniform Manifest (2 pages)

4. CHK Material Receipt Record (1 page)

5. Notification of Waste Subject to Land Disposal Restrictions (2 pages)

6. Certification by Generator or Treatment Facility of Restricted Waste Meeting Treatment Standards (1 page)

7. Table CCWE (4 pages)

8. Table CCW (13 pages)

9. List of Halogenated Organic Compounds Regulated Under Section 268.32 (1 page)

10. Non-Hazardous Waste Form (1 page)

This page intentionally left blank

insert pages of

Waste Profile Sheet (1 page)

Uniform Manifest (1 page)

Uniform Manifest Instructions (1 page)

Notification of Waste Subject to Land disposal Restrictions (2 pages)

Certification by Generator or Treatment Facility of Restricted Waste Meeting Treatment Standards (1 page)

Table CCWE (1 page)

Table CCW (5 pages)

List of Halogenated Organic Compounds Regulated Under Section 268.32 (1 page)

Non-Hazardous Waste Form (1 page)

Waste Acceptance Sheet (1 page)

INSTRUCTIONS

The following information is required for all waste to be considered for transportation, storage, treatment or disposal. Answers must not be abbreviated, must be printed in ink, and will be maintained in confidence. Responses of "none" or "not applicable" should be made when appropriate. Material Safety Data Sheets for all components of the waste should accompany this form, if available. A copy of this form should be retained by the customer.

ALL QUESTIONS MUST BE ANSWERED

Part A GENERAL INFORMATION

Part B DOT — Choose the most appropriate DOT shipping information by referring to 49 CFR 172.101.

Part C RCRA — Select applicable EPA waste codes by referencing 40 CFR 261.

Part D ANNUAL REPORT CODES — Obtain these codes from the EPA Hazardous Waste Report Booklet.

Part E OTHER COMPONENTS — Check the appropriate boxes and list the total parts per million. If data was obtained from laboratory analysis, attach a copy of the analysis.

Part F PHYSICAL CHARACTERISTICS AT 70 DEGREES F — Complete all sections. The flash point is a value attained using the appropriate test method referenced in 40 CFR 261.21. Dermal and oral toxicity can be found in chemical dictionaries or by referring to the Material Safety Data Sheet.

Part G METALS — Indicate if the metal concentrations are represented as total or leachable metals, and whether they are above or below the regulatory limit as defined by the Extraction Procedure contained in 40 CFR, Appendix II.

Part H PHYSICAL/CHEMICAL CONSTITUENTS — List all components of the waste using specific chemical names, including water, earth, or forms of debris. For each component, indicate the expected percent or other unit of measure in which the component is present. The constituents must total 100%.

Part I ANTICIPATED VOLUME — Enter the total volume to be treated, stored, or disposed.

Generator Certification: Must be signed by an authorized management representative of the company generating the waste stream described on this form.

FOR LAIDLAW ENVIRONMENTAL SERVICES USE ONLY

ample Submitted ☐ Yes ☐ No No. of Samples _____ Chain of Custody ☐ Yes ☐ No Sample No. _____

aidlaw Approval

Approved ☐ Disapproved Approval # _____ Annual Analysis Date _____

Operations _____ Date _____

Comments _____

Phy. St. _____ Loc. Code _____ Non Reg (Y/N) _____ Haz. Label (Y/N) _____ Prim. Label _____ Sub. Label _____

Land Disposal Restrictions

☐ Unrestricted ☐ Restricted Category _____ Sub Category _____

Variance Date _____ Treatability Group: ☐ WW ☐ NWW Treatment Technology _____

Legend No. _____ 40 CFR Ref.: ☐ 268.41 CCWE ☐ 268.42 Table 2 ☐ 268.43 CCW

Routing

TSD #1 _____ TSD #2 _____

Outgoing Approval # _____ Outgoing Approval # _____

Handling Codes _____ Handling Codes _____

Cost Codes _____ Cost Codes _____

Health and Safety

Special Handling Instructions _____

es

Customer No. _____ Billing Codes _____ Comments: _____

EAIDLAW ENVIRONMENTAL SERVICES

NAME OF WASTE STREAM

MATERIAL PROFILE NO.

☐ New ☐ Amendment

A. GENERATOR INFORMATION

Generator Name _____

Facility Address _____

City/County _____

State _____ Zip Code _____

USEPA ID# _____

State ID# _____

Technical Contact _____

Telephone ( ) _____ EXT. _____

Fax ( ) _____

Billing Name _____

Billing Address _____

City _____ State _____ Zip Code _____

Attention _____

Telephone ( ) _____ EXT. _____

B. DOT

Shipping Name _____

Hazard Class _____

UN/NA No. _____ Packing Group _____ RQ _____

C. RCRA

RCRA Non Hazardous/Exempt? ☐ Yes ☐ No Process Generating: _____

State Waste Codes: _____ EPA Waste Codes: _____

D. ANNUAL REPORT CODES

SIC Code: _____

Source Code: A _____

Form Code: B _____

Origin Code: _____

System Type: M _____

E. OTHER COMPONENTS

	No	Yes	Total ppm
PCB's	☐	☐	_____
Cyanides	☐	☐	_____
Sulfides	☐	☐	_____
Pesticides	☐	☐	_____
Phenolics	☐	☐	_____
Dioxins	☐	☐	_____
Halogens	☐	☐	_____ %

F. PHYSICAL CHARACTERISTICS AT 70º F

1. Infectious or Biological Waste? ☐ Yes ☐ No
2. NRC Regulated Radioactive? ☐ Yes ☐ No
3. Reactivity ☐ None ☐ Water Reactive ☐ Pyrophoric ☐ Shock Sensitive ☐ Cyanides ☐ DOT Explosive ☐ Sulfides ☐ Other _____

☐ Gases (Cylinder) ☐ Solid _____ %
☐ Aerosol ☐ Sludges _____ %
☐ Gel-Pack ☐ Free Liquids _____ %
100%

Layers
☐ Single Layered ☐ Bi-layered ☐ Multi-layered

Viscosity
☐ Low ☐ Medium ☐ High

Odor
☐ None ☐ Mild ☐ Strong Describe:

Color/Appearance:

Weight
Density _____ lbs./gal. (US, liq) _____ lbs./cu. foot
Dry Weight ☐ <1.0% ☐ 5-20% ☐ 1-5% ☐ 20-100%

pH ☐ N/A
☐ 0-2 ☐ 4.1-10 ☐ ≥ 12.5
☐ 2.1-4 ☐ 10.1-12.4 Exact _____

Flash Point (liquid only)
☐ <73ºF (23ºC)
☐ 73-140ºF (23-60ºC)
☐ 142-200ºF (61-93ºC)
☐ >200ºF (93ºC)
☐ N/A

Boiling Point
☐ <95ºF (35ºC)
☐ >95ºF (35ºC)
☐ N/A

BTU/Lb.

Dermal Toxicity LD_{50} (Mg/Kg)
☐ ≤40 ☐ >200, ≤1000
☐ >40, ≤200 ☐ >1000

4. Material poisonous by inhalation? ☐ Yes ☐ No

Oral Toxicity LD_{50} (Mg/Kg)

	☐ ≤5	☐ >5, ≤50
Solids:	☐ >50, ≤200	☐ >200
Liquids:	☐ >50, ≤500	☐ >500

5. Is this waste stored in vented drums? ☐ Yes ☐ No
6. Is this waste pumpable? ☐ Yes ☐ No
7. Is this waste polymerizable? ☐ Yes ☐ No
8. Is waste stream subject to the National Emission Standards for Benzene Waste Operations (40 CFR 61 Subpart FF)? ☐ Yes ☐ No
9. Is this waste regulated as an ozone depleting substance (40 CFR part 82)? ☐ Yes ☐ No
10. Does this waste contain scrap metal pieces greater than 2 inches in size? ☐ Yes ☐ No

G. METALS

☐ NONE ☐ TCLP (MG/L) ☐ TOTAL (PPM)

	Reg. Limit	Below	Above	Range
Arsenic	5 mg/L	☐	☐	_____
Barium	100 mg/L	☐	☐	_____
Cadmium	1 mg/L	☐	☐	_____
Chromium	5 mg/L	☐	☐	_____
Copper		☐	☐	_____
Lead	5 mg/L	☐	☐	_____
Mercury	0.2 mg/L	☐	☐	_____
Nickel	134 mg/L	☐	☐	_____
Selenium	1 mg/L	☐	☐	_____
Silver	5 mg/L	☐	☐	_____
Zinc		☐	☐	_____
Others:				_____

H. PHYSICAL/CHEMICAL CONSTITUENTS

_____ %
_____ %
_____ %
_____ %
_____ %
_____ %
_____ %
_____ %
_____ %
_____ %
_____ %
100 %

(Attach All MSDS, Sample Analysis and Additional Info.)

I. ANTICIPATED VOLUME

Qty.	Container	Qty.	Container
☐ _____	5 gl. pail	☐ _____	Cubic Yard Box*
☐ _____	15 gl. carboy	☐ _____	Super Sack*
☐ _____	30 gl. drum	☐ _____	Rolloff/Dump Trailer*
☐ _____	55 gl. drum	☐ _____	Tanker*
☐ _____	85 gl. drum	☐ _____	Other _____

Per ☐ 1 Time ☐ Week ☐ Month ☐ Year ☐ Other _____

(*) Is this waste regulated as a Marine Pollutant (49 CFR 171.8)? ☐ Yes ☐ No

Generator's Certification:
I certify that the above and attached description is complete and accurate to the best of my knowledge and ability to determine that no deliberate or willful omissions of composition properties exist and that all known or suspected hazards have been disclosed. I certify that the materials tested are representative of all material described by this form.

Generator's Authorized Signature: _____ Date _____

Form Approved. OMB No. 2050-0039. Expires 9-30-99

UNIFORM HAZARDOUS WASTE MANIFEST

1. Generator's US EPA ID No. | Manifest Document No. | 2. Page 1 of | Information in the shaded areas is not required by Federal law.

3. Generator's Name and Mailing Address

4. Generator's Phone ( )

A. State Manifest Document Number

B. State Generator's ID

5. Transporter 1 Company Name | 6. US EPA ID Number

C. State Transporter's ID

D. Transporter's Phone

7. Transporter 2 Company Name | 8. US EPA ID Number

E. State Transporter's ID

F. Transporter's Phone

9. Designated Facility Name and Site Address | 10. US EPA ID Number

G. State Facility's ID

H. Facility's Phone

11. US DOT Description (Including Proper Shipping Name, Hazard Class and ID Number)	HM	12. Containers No.	Type	13. Total Quantity	14. Unit Wt/Vol	I. Waste No.
a.						
b.						
c.						
d.						

J. Additional Descriptions for Materials Listed Above

K. Handling Codes for Wastes Listed Above

15. Special Handling Instructions and Additional Information

16. **GENERATOR'S CERTIFICATION:** I hereby declare that the contents of this consignment are fully and accurately described above by proper shipping name and are classified, packed, marked, and labeled, and are in all respects in proper condition for transport by highway according to applicable international and national government regulations.
If I am a large quantity generator, I certify that I have a program in place to reduce the volume and toxicity of waste generated to the degree I have determined to be economically practicable and that I have selected the practicable method of treatment, storage, or disposal currently available to me which minimizes the present and future threat to human health and the environment; OR, if I am a small quantity generator, I have made a good faith effort to minimize my waste generation and select the best waste management method that is available to me and that I can afford.

Printed/Typed Name | Signature | Month Day Year

GENERATOR

17. Transporter 1 Acknowledgement of Receipt of Materials

Printed/Typed Name | Signature | Month Day Year

18. Transporter 2 Acknowledgement of Receipt of Materials

Printed/Typed Name | Signature | Month Day Year

TRANSPORTER

19. Discrepancy Indication Space

20. Facility Owner or Operator: Certification of hazardous materials covered by this manifest except as noted in Item 19.

Printed/Typed Name | Signature | Month Day Year

FACILITY

PRINTED ON RECYCLED PAPER USING SOYBEAN INK PRINTED WITH SOY INK

EPA Form 8700-22 (Rev. 9-88) Previous editions are obsolete.

ORIGINAL - RETURN TO GENERATOR

Please print or type. (Form designed for use on elite (12-pitch) typewriter.)

Form Approved. OMB No 2050-0039 Expires 9-30-91

UNIFORM HAZARDOUS WASTE MANIFEST *(Continuation Sheet)*	21. Generator's US EPA ID No.	Manifest Document No.	22. Page	Information in the shaded areas is not required by Federal law.

GENERATOR

23. Generator's Name	L. State Manifest Document Number
	M. State Generator's ID
24. Transporter ___ Company Name / 25. US EPA ID Number	N. State Transporter's ID
	O. Transporter's Phone
26. Transporter ___ Company Name / 27. US EPA ID Number	P. State Transporter's ID
	Q. Transporter's Phone

28. US DOT Description *(Including Proper Shipping Name, Hazard Class, and ID Number)*	HM	29. Containers No.	Type	30. Total Quantity	31. Unit Wt/Vol	R. Waste No.
a.						
b.						
c.						
d.						
e.						
f.						
g.						
h.						
i.						

S. Additional Descriptions for Materials Listed Above	T. Handling Codes for Wastes Listed Above

32. Special Handling Instructions and Additional Information

TRANSP.

33. Transporter ___ Acknowledgement of Receipt of Materials		Date
Printed/Typed Name	Signature	Month Day Year
34. Transporter ___ Acknowledgement of Receipt of Materials		Date
Printed/Typed Name	Signature	Month Day Year

FACILITY

35. Discrepancy Indication Space

LDR NOTIFICATION*

(EPA Hazardous Wastes Only)

LAIDLAW ENVIRONMENTAL SERVICES

1. Generator Name _____ 2. Manifest No. _____ Page ____ of ____

3. Pursuant to 40 CFR 268.7, this shipment contains waste restricted under PART 268 or RCRA Section 3004(d):

A. *Manifest Line Item No.* _____ & RES/Aptus Waste Stream No. _____

i. EPA Waste Code(s) & Subcategories (if any): _____

☐ *Check if ATTACHMENT I: EPA Waste Code Listing is being submitted with this notification instead of listing codes above.*

ii. Treatability Group: ☐ NWW (including debris) ☐ WW ☐ Lab Pack (Appendix IV) ☐ Lab Pack (268.42[c])**

iii. Waste Constituent Notification(s) (if any): _____

☐ *Check if ATTACHMENT II: Waste Constituent Notification is being submitted with this notification instead of listing constituents above.*

B. *Manifest Line Item No.* _____ & RES/Aptus Waste Stream No. _____

i. EPA Waste Code(s) & Subcategories (if any): _____

☐ *Check if ATTACHMENT I: EPA Waste Code Listing is being submitted with this notification instead of listing codes above.*

ii. Treatability Group: ☐ NWW (including debris) ☐ WW ☐ Lab Pack (Appendix IV) ☐ Lab Pack (268.42[c])**

iii. Waste Constituent Notification(s) (if any): _____

☐ *Check if ATTACHMENT II: Waste Constituent Notification is being submitted with this notification instead of listing constituents above.*

C. *Manifest Line Item No.* _____ & RES/Aptus Waste Stream No. _____

i. EPA Waste Code(s) & Subcategories (if any): _____

☐ *Check if ATTACHMENT I: EPA Waste Code Listing is being submitted with this notification instead of listing codes above.*

ii. Treatability Group: ☐ NWW (including debris) ☐ WW ☐ Lab Pack (Appendix IV) ☐ Lab Pack (268.42[c])**

iii. Waste Constituent Notification(s) (if any): _____

☐ *Check if ATTACHMENT II: Waste Constituent Notification is being submitted with this notification instead of listing constituents above.*

D. *Manifest Line Item No.* _____ & RES/Aptus Waste Stream No. _____

i. EPA Waste Code(s) & Subcategories (if any): _____

☐ *Check if ATTACHMENT I: EPA Waste Code Listing is being submitted with this notification instead of listing codes above.*

ii. Treatability Group: ☐ NWW (including debris) ☐ WW ☐ Lab Pack (Appendix IV) ☐ Lab Pack (268.42[c])**

iii. Waste Constituent Notification(s) (if any): _____

☐ *Check if ATTACHMENT II: Waste Constituent Notification is being submitted with this notification instead of listing constituents above.*

NOTE: Waste Constituent Notification Guidelines: 1) Identify specific F001-F005 & F039 constituents present in waste for these codes; 2) Identify all Underlying Hazardous Constituents present in waste for the following codes: D001 (other than liquid >10% TOC, if not combusted), D002, D003OR, D003WR, D012-D043.

4. ** ☐ Lab Pack (268.42[c]) Certification: I certify under penalty of law that I personally have examined and am familiar with the waste and that the lab pack does not contain any wastes identified in Appendix IV to Part 268. I am aware that there are significant penalties for submitting a false certification including possibility of fine or imprisonment.

Generator Signature _____ Date ____ / ____ / ____

(Required for 268.42(c) Certification)

WASTE CODE SUBCATEGORY LEGEND

AN	=	Anhydrous	LM	=	Low Mercury (< 260 mg/kg)	RS	= Reactive Sulfide
CB	=	Cadmium Battery	LQ	=	Liquid	TOC	= Total Organic Carbon
CS	=	Calcium Sulfate	NCS	=	Non-Calcium Sulfate	WR	= Water Reactive
HM	=	High Mercury (≥260 mg/kg)	NIRR	=	Non-Incineration or RMERC Residues	WW	= Wastewater (< 1% TOC and < 1% Total Suspended Solids)
HY	=	Hydrated	NWW	=	Non-Wastewater		
IRR	=	Incineration or RMERC Residues	OR	=	Other Reactives (Based on 40 CFR 261.23(a)(1))		
LB	=	Lead Acid Battery	RC	=	Reactive Cyanide		

** For wastes not meeting treatment standards or exceeding prohibition levels of 268.32 or RCRA section 3004(d).*

HYDROCARBON RECYCLERS, INC. - WICHITA

MATERIAL RECEIPT RECORD

Generator: ABZ INDUSTRIES Customer Code: A999 Receipt Date: 02/18/92
Address: 12345 STATE STREET ANYWHERE KS 12345-1234 Manifest/Order#: 00001

Line: 11A Labcode: 990001 Quantity: 2 DM 100 G Acceptance: WI98-1234
Product:WASTE FLAMMABLE LIQ.,NOS Waste Codes: D001 D006 Drum #:
Solids(in.)_____ spg._______________ pH_______________ Normality _____
Sniffer _______________ Flashpt.(F)_____ Ignitability(+ \ -)
Bielstein_______________ % Cl (wt.)_____ Btu/lb._____
Compatibility_____ PCB (ppm.)_____ % Yield_____
Disposal Codes: Wasteform _____ TSDR(ON_____ OFF_____ RS_____)
Misc. _____

RECOMMENDATION

Tank# _____

Line: 11B Labcode: 990002 Quantity: 5 DM 2500 P Acceptance: WI98-5678
Product:HAZ. WASTE SOLID, NOS Waste Codes: D006 D007 D008 Drum #:
Solids(in.)_____ spg._______________ pH_______________ Normality _____
Sniffer _______________ Flashpt.(F)_____ Ignitability(+ \ -)
Bielstein_______________ % Cl (wt.)_____ Btu/lb._____
Compatibility_____ PCB (ppm.)_____ % Yield_____
Disposal Codes: Wasteform _____ TSDR(ON_____ OFF_____ RS_____)
Misc. _____

RECOMMENDATION

Tank# _____

Line: 11C Labcode: 990003 Quantity: 1 DM 50 G Acceptance: WI98-9123
Product:WPRM Waste Codes: D001 Drum #:
Solids(in.)_____ spg._______________ pH_______________ Normality _____
Sniffer _______________ Flashpt.(F)_____ Ignitability(+ \ -)
Bielstein_______________ % Cl (wt.)_____ Btu/lb._____
Compatibility_____ PCB (ppm.)_____ % Yield_____
Disposal Codes: Wasteform _____ TSDR(ON_____ OFF_____ RS_____)
Misc. _____

RECOMMENDATION

Tank# _____

Line: 11D Labcode: 990004 Quantity: 1 DM 50 G Acceptance: WI89-4567
Product:W. CORROSIVE LIQ., NOS Waste Codes: D002 Drum #:
Solids(in.)_____ spg._______________ pH_______________ Normality _____
Sniffer _______________ Flashpt.(F)_____ Ignitability(+ \ -)
Bielstein_______________ % Cl (wt.)_____ Btu/lb._____
Compatibility_____ PCB (ppm.)_____ % Yield_____
Disposal Codes: Wasteform _____ TSDR(ON_____ OFF_____ RS_____)
Misc. _____

RECOMMENDATION

Tank# _____

LAUDLAW ENVIRONMENTAL SERVICES

FORM A

Customer Notification And Certification

Page ___ of ___

Generator Name/Location: _____

EPA I.D. Number: _____

Waste Profile or ARF Designation: _____

Manifest Number: _____

EPA Waste Number(s): _____

Waste Analysis Available? Yes (attached) _____ No _____ On file at receiving facility _____

Unrestricted Waste Notification (*Category 1*)

Mark the statement below if you generate a waste that is not a land disposal restricted waste (the waste has no applicable treatment standards).

☐ *I notify that I am familiar with the waste through analysis and testing or through knowledge of the waste to support this notification that the waste is not restricted as specified in 40 CFR §268, Subpart D or any applicable prohibitions set forth in 40 CFR §268.32 or RCRA Section 3004(d).*

Restricted Waste/Debris Notification (*Category 2*)

Mark statement (2a) below if you generate a waste that is restricted from land disposal (the waste has applicable treatment standards). NOTE-1: A waste may pass one or more standards and require treatment or be varianced for others. In this case, all applicable categories must be checked. NOTE-2: D001, D002 and D012 - D043 wastes must be evaluated for underlying constituents found in 40 CFR §268. 48 (Table UTS), that are reasonably expected to be present. A list of these constituents must be included on FORM B, or attached to and accompany this notification with each waste shipment. Mark statement (2b) if you generate a debris waste that will be treated to the alternate debris standards located in 40 CFR §268.45.

(2a) Restricted Waste Notification

I notify that I am familiar with the waste through analysis and testing or through knowledge of the waste to support this notification that the waste is subject to the treatment standards specified in 40 CFR §268 Subpart D. The waste: (a) must be treated to the appropriate regulatory treatment standard, by the appropriate regulatory treatment method; (b) qualifies for a variance as described in category 3 below; or (c) meets some or all of the standards as described in Category 4 below.

☐ **(2b) Alternate Debris Treatment Notification: This hazardous debris is subject to the alternate treatment standards of 40 CFR §268.45.**

The waste contains the following contaminants subject to treatment [check all that apply]:

_____**§268.45(b)(1) - Toxicity characteristic debris;**

_____**§268.45(b)(2) - Debris contaminated with listed waste;**

_____**§268.45(b)(3) - Cyanide reactive debris.**

Restricted Waste Variance Notification (*Category 3*)

Mark the statement below and list the applicable variance date on Form B, if you generate a waste which does not require treatment prior to land disposal because of a variance (including a case-by-case extension under 40 CFR §268.5, a nationwide variance under 40 CFR §268 Subpart C, a no migration petition under 40 CFR §268.6, or other applicable variance).

☐ *I notify pursuant to 40 CFR §268.7(a)(3) that I am familiar with the waste through analysis and testing or through knowledge of the waste to support this notification that this waste is subject to a national capacity variance under 40 CFR §268 Subpart C, or a case-by-case extension under 40 CFR §268.5, or an exemption under 40 CFR §268.6.*

Restricted Waste Certification (Treatment Standards Met) (*Category 4*)

Mark the certification statement below if you generate a waste that is restricted from land disposal (the waste has applicable treatment standards), and the waste meets the standards as generated. Note: All applicable constituent standards must be accounted for. A waste may pass one or more standards and require treatment or be variance for other constituents. In this case, all applicable categories must be checked.

I certify under penalty of law that I personally have examined and am familiar with the waste through analysis and testing or through knowledge of the waste to support this certification that the waste complies with the treatment standards specified in 40 CFR Part 268 Subpart D and all applicable prohibitions set forth in 40 CFR 268.32 or RCRA § 3004(d). I believe that the information I submitted is true, accurate and complete. I am aware that there are significant penalties for submitting a false certification, including the possibility of fine and imprisonment.

SIGNATURE: _____ DATE: _____

PRINT NAME: _____ TITLE: _____

LDR ATTACHMENT II:

Waste Constituent Notification

LAIDLAW ENVIRONMENTAL SERVICES

1. Generator Name _____ 2. Manifest No. _____ Page 1 of _____

3. Manifest Line Item No. *(One Only)* _____ & RES/Aptus Waste Stream No. *(One Only)* _____

NOTE: Waste Constituent Notification Guidelines: 1) Identify specific F001-F005 & F039 constituents present in waste for these codes; 2) Identify all Underlying Hazardous Constituents present in waste for the following codes: D001 (other than liquid >10% TOC, if not combusted), D002, D003OR, D003WR, D012-D043.

Inorganic Constituents

- ☐ Antimony
- ☐ Arsenic
- ☐ Barium
- ☐ Beryllium
- ☐ Cadmium
- ☐ Chromium (Total)
- ☐ Cyanides (Total)
- ☐ Cyanides (Amenable)
- ☐ Fluoride (F039 only)*
- ☐ Lead
- ☐ Mercury
- ☐ Nickel
- ☐ Selenium
- ☐ Silver
- ☐ Sulfide
- ☐ Thallium
- ☐ Vanadium (F039 only)*

* Constituent only regulated under F039 wastewaters

Organic Constituents

- ☐ A2213
- ☐ Acenaphthene
- ☐ Acenaphthylene
- ☐ Acetone
- ☐ Acetonitrile
- ☐ Acetophenone
- ☐ 2-Acetylaminofluorene
- ☐ Acrolein
- ☐ Acrylamide
- ☐ Acrylonitrile
- ☐ Aldicarb sulfone
- ☐ Aldrin
- ☐ 4-Aminobiphenyl
- ☐ Aniline
- ☐ Anthracene
- ☐ Aramite
- ☐ Barban
- ☐ Bendiocarb
- ☐ Bendiocarb phenol
- ☐ Benomyl
- ☐ Benz(a)anthracene
- ☐ Benzal chloride
- ☐ Benzene
- ☐ Benzo(b)fluoranthene
- ☐ Benzo(k) fluoranthene
- ☐ Benzo(g,h i),perylene
- ☐ Benzo(a)pyrene
- ☐ alpha-BHC
- ☐ beta-BHC
- ☐ delta-BHC
- ☐ gamma-BHC
- ☐ Bromodichloromethane
- ☐ Bromomethane (Methyl bromide)
- ☐ 4-Bromophenyl phenyl ether
- ☐ n-Butyl alcohol
- ☐ Butyl benzyl phthalate
- ☐ Butylate
- ☐ 2-sec-Butyl-4,6-dinitrophenol (Dinoseb)
- ☐ Carbaryl
- ☐ Carbenzadim
- ☐ Carbofuran
- ☐ Carbofuran phenol
- ☐ Carbon disulfide
- ☐ Carbon tetrachloride
- ☐ Carbosulfan
- ☐ Chlordane (alpha & gamma isomers)
- ☐ p-Chloroaniline
- ☐ Chlorobenzene
- ☐ Chlorobenzilate
- ☐ 2-Chloro-1,3-butadiene
- ☐ Chlorodibromomethane
- ☐ Chloroethane
- ☐ bis(2-Chloroethoxy)methane
- ☐ bis(2-Chloroethyl)ether
- ☐ 2-Chloroethyl vinyl ether
- ☐ Chloroform
- ☐ bis(2-Chloroisopropyl)ether
- ☐ p-Chloro-m-cresol
- ☐ Chloromethane (Methyl chloride)
- ☐ 2-Chloronaphthalene
- ☐ 2-Chlorophenol
- ☐ 3-Chloropropylene
- ☐ Chrysene
- ☐ o-Cresol
- ☐ m-Cresol
- ☐ p-Cresol
- ☐ m-Cumenyl methylcarbamate
- ☐ Cyclohexanone
- ☐ o,p'-DDD
- ☐ p,p'-DDD
- ☐ o,p'-DDE
- ☐ p,p'-DDE
- ☐ o,p'-DDT
- ☐ p,p'-DDT
- ☐ Dibenz(a,h)anthracene
- ☐ Dibenz(a,e)pyrene
- ☐ 1,2-Dibromo-3-chloropropane
- ☐ 1,2-Dibromoethane (Ethylene dibromide)
- ☐ Dibromomethane
- ☐ m-Dichlorobenzene
- ☐ o-Dichlorobenzene
- ☐ p-Dichlorobenzene
- ☐ Dichlorodifluoromethane
- ☐ 1,1-Dichloroethane
- ☐ 1,2-Dichloroethane
- ☐ 1,1-Dichloroethylene
- ☐ trans-1,2-Dichloroethylene
- ☐ 2,4-Dichlorophenol
- ☐ 2,6-Dichlorophenol
- ☐ 2,4-D (2,4-Dichlorophenoxyacetic acid)
- ☐ 1,2-Dichloropropane
- ☐ trans-1,3-Dichloropropylene
- ☐ Dieldrin
- ☐ Diethyl phthalate
- ☐ Diethylene glycol, dicarbamate
- ☐ p-Dimethylaminoazobenzene
- ☐ 2-4-Dimethyl phenol
- ☐ Dimethyl phthalate
- ☐ Dimetilan
- ☐ Di-n-butyl phthalate
- ☐ 1,4-Dinitrobenzene
- ☐ 4,6-Dinitro-o-cresol
- ☐ 2,4-Dinitrophenol
- ☐ 2,4-Dinitrotoluene
- ☐ 2,6-Dinitrotoluene
- ☐ Di-n-octyl phthalate
- ☐ Di-n-propylnitrosamine
- ☐ 1,4-Dioxane
- ☐ Diphenylamine
- ☐ Diphenylnitrosamine
- ☐ 1,2-Diphenylhydrazine
- ☐ Disulfoton
- ☐ Dithiocarbamates (total)
- ☐ Endosulfan I
- ☐ Endosulfan II
- ☐ Endosulfan sulfate
- ☐ Endrin
- ☐ Endrin aldehyde
- ☐ EPTC
- ☐ Ethyl acetate
- ☐ Ethyl benzene
- ☐ Ethyl cyanide (Propanenitrile)
- ☐ Ethyl ether
- ☐ Ethyl methacrylate
- ☐ Ethylene oxide
- ☐ bis(2-Ethylhexyl) phthalate
- ☐ Famphur
- ☐ Fluoranthene
- ☐ Fluorene
- ☐ Formetanate hydrochloride
- ☐ Formparanate
- ☐ Heptachlor
- ☐ Heptachlor epoxide
- ☐ Hexachlorobenzene
- ☐ Hexachlorobutadiene

Manifest No. _____ Manifest Line Item No. _____ Stream No. _____

Continuation of Waste Constituent Notification

- ☐ Hexachlorocyclopentadiene
- ☐ Hexachloroethane
- ☐ Hexachloropropylene
- ☐ HxCDDs (All Hexachlorodibenzo-p-dioxins)
- ☐ HxCDFs (All Hexachloro-dibenzofurans)
- ☐ Indeno (1,2,3-c,d) pyrene
- ☐ Iodomethane
- ☐ Isobutyl alcohol
- ☐ Isodrin
- ☐ Isolan
- ☐ Isosafrole
- ☐ Kepone
- ☐ Methacrylonitrile
- ☐ Methanol
- ☐ Methapyrilene
- ☐ Methiocarb
- ☐ Methomyl
- ☐ Methoxychlor
- ☐ Methyl ethyl ketone
- ☐ Methyl isobutyl ketone
- ☐ Methyl methacrylate
- ☐ Methyl methan-sulfonate
- ☐ Methyl parathion
- ☐ 3-Methylcholanthrene
- ☐ 4,4-Methylene bis(2-chloro-aniline)
- ☐ Methylene chloride
- ☐ Metolcarb
- ☐ Mexacarbate
- ☐ Molinate
- ☐ Naphthalene
- ☐ 2-Naphthylamine
- ☐ o-Nitroaniline
- ☐ p-Nitroaniline
- ☐ Nitrobenzene
- ☐ 5-Nitro-o-toluidine
- ☐ o-Nitrophenol
- ☐ p-Nitrophenol
- ☐ N-Nitrosodiethylamine
- ☐ N-Nitrosodimethylamine
- ☐ N-Nitroso-di-n-butylamine
- ☐ N-Nitrosomethylethylamine
- ☐ N-Nitrosomorpholine
- ☐ N-Nitrosopiperidine
- ☐ N-Nitrosopyrrolidine
- ☐ Oxamyl
- ☐ Parathion
- ☐ Total PCBs
- ☐ Pebulate
- ☐ Pentachlorobenzene
- ☐ PeCDDs (All Pentachloro-dibenzo-p-dioxins)
- ☐ PeCDFs (All Pentachloro-dibenzofurans)
- ☐ Pentachloroethane
- ☐ Pentachloronitro-benzene
- ☐ Pentachlorophenol
- ☐ Phenacetin
- ☐ Phenanthrene
- ☐ Phenol
- ☐ o-Phenylenediamine
- ☐ Phorate
- ☐ Phthalic acid
- ☐ Phthalic anhydride
- ☐ Physostigmine
- ☐ Physostigmine salicylate
- ☐ Promecarb
- ☐ Pronamide
- ☐ Propham
- ☐ Propoxur
- ☐ Prosulfocarb
- ☐ Pyrene
- ☐ Pyridine
- ☐ Safrole
- ☐ Silvex (2,4,5-TP)
- ☐ 1,2,4,5-Tetrachloro-benzene
- ☐ TCDDs (All Tetrachloro-dibenzo-p-dioxins)
- ☐ TCDFs (All Tetrachloro-dibenzofurans)
- ☐ 1,1,1,2-Tetrachloroethane
- ☐ 1,1,2,2,-Tetrachloroethane
- ☐ Tetrachloroethylene
- ☐ 2,3,4,6-Tetrachlorophenol
- ☐ Thiodicarb
- ☐ Thiophanate-methyl
- ☐ Tirpate
- ☐ Toluene
- ☐ Toxaphene
- ☐ Triallate
- ☐ Tribromomethane (Bromoform)
- ☐ 1,2,4-Trichlorobenzene
- ☐ 1,1,1-Trichloroethane
- ☐ 1,1,2-Trichloroethane
- ☐ Trichloroethylene
- ☐ Trichloromonofluoromethane
- ☐ 2,4,5-Trichlorophenol
- ☐ 2,4,6-Trichlorophenol
- ☐ 2,4,5-T (2,4,5-Trichloro phenoxyacetic acid)
- ☐ 1,2,3-Trichloropropane
- ☐ 1,1,2-Trichloro-1,2,2,-trifluoroethane
- ☐ Triethylamine
- ☐ tris-(2,3-Dibromopropyl) phosphate
- ☐ Vernolate
- ☐ Vinyl chloride
- ☐ Xylenes- mixed isomers

TABLE CCWE.—CONSTITUENT CONCENTRATIONS IN WASTE EXTRACT

RCRA 98, 99

Waste code	Commercial chemical name	See also	Regulated hazardous constituent	CAS number for regulated hazardous constituent	Wastewater Concentration (mg/L)	Wastewater Notes	Nonwastewaters Concentration (mg/L)	Nonwastewaters Notes
D004	NA	Table CCW in 268.43	Arsenic	7440-38-2	NA		5.0	(1)
D005	NA	Table CCW in 268.43	Barium	7440-39-3	NA		100	
D006	NA	Table CCW in 268.43	Cadmium	7440-43-9	NA		1.0	
D007	NA	Table CCW in 268.43	Chromium (Total)	7440-47-32	NA		5.0	
D008	NA	Table CCW in 268.43	Lead	7439-92-1	NA		5.0	(1)
D009 (Low Mercury Subcategory—less than 260 mg/kg Mercury)	NA	Table 2 in 268.42 and Table CCW in 268.43	Mercury	7439-97-6	NA		0.20	
D010	NA	Table CCW in 268.43	Selenium	7782-49-2	NA		5.7	
D011	NA	Table CCW in 268.43	Silver	7440-22-4	NA		5.0	
F001-F005 spent solvents	NA	Table 2 in 268.42 and Table CCW in 268.43	Acetone	67-64-1	0.05		0.59	
			n-Butyl alcohol	71-36-3	5.0		5.0	
			Carbon disulfide	75-15-0	1.05		4.81	
			Carbon tetrachloride	56-23-5	0.05		0.96	
			Chlorobenzene	108-90-7	0.15		0.05	
			Cresols (and cresylic acid)		2.82		0.75	
			Cyclohexanone	108-94-1	0.125		0.75	
			1,2-Dichlorobenzene	95-50-1	0.65		0.125	
			Ethyl acetate	141-78-6	0.05		0.75	
			Ethylbenzene	100-41-4	0.05		0.053	
			Ethyl ether	60-29-7	0.05		0.75	
			Isobutanol	78-83-1	5.0		5.0	
			Methanol	67-56-1	0.25		0.75	
			Methylene chloride	75-9-2	0.20		0.96	
			Methyl ethyl ketone	78-93-3	0.05		0.75	
			Methyl isobutyl ketone	108-10-1	0.05		0.33	
			Nitrobenzene	98-95-3	0.66		0.125	
			Pyridine	110-86-1	1.12		0.33	
			Tetrachloroethylene	127-18-4	0.079		0.05	
			Toluene	108-88-3	1.12		0.33	
			1,1,1-Trichloroethane	71-55-6	1.05		0.41	
			1,1,2-Trichloro-1,2,2-Trifluorethane	76-13-1	1.05		0.96	
			Trichloroethylene	79-01-6	0.062		0.091	
			Trichlorofluoro-methane	75-69-4	0.05		0.96	
			Xylene		0.05		0.15	
F006	NA	Table CCW in 268.43	Cadmium	7440-43-9	NA		0.066	
			Chromium (Total)	7440-47-32	NA		5.2	
			Lead	7439-92-1	NA		0.51	
			Nickel	7440-02-0	NA		0.32	
			Silver	7440-22-4	NA		0.072	
F007	NA	Table CCW in 268.43	Cadmium	7440-43-9	NA		0.066	
			Chromium (Total)	7440-47-32	NA		5.2	
			Lead	7439-92-1	NA		0.51	
			Nickel	7440-02-0	NA		0.32	
			Silver	7440-22-4	NA		0.072	
F008	NA	Table CCW in 268.43	Cadmium	7440-43-9	NA		0.066	
			Chromium (Total)	7440-47-32	NA		5.2	
			Lead	7439-92-1	NA		0.51	
			Nickel	7440-02-0	NA		0.32	
			Silver	7440-22-4	NA		0.072	

©McCoy and Associates, Inc.

268.41 Table CCWE—Constituent Concentrations In Waste Extract

MARK STANDARD THAT APPLIES

F001-F005 spent solvents	Concentration (in mg/l)	
	Wastewaters containing spent solvents	All other spent solvent wastes
☐ Acetone	0.05	0.59
☐ n-Butyl alcohol	5.0	5.0
☐ Carbon disulfide	1.05	4.81
☐ Carbon tetrachloride	0.05	0.96
☐ Chlorobenzene	0.15	0.05
☐ Cresols (& Cresylic acid)	2.82	0.75
☐ Cyclohexanone	0.125	0.75
☐ 1,2-Dichlorobenzene	0.65	0.125
☐ Ethyl acetate	0.05	0.75
☐ Ethylbenzene	0.05	0.053
☐ Ethyl ether	0.05	0.75
☐ Isobutanol	5.0	5.0
☐ Methanol	0.25	0.75
☐ Methylene chloride	0.20	0.96
☐ Methyl ethyl ketone	0.05	0.75
☐ Methyl isobutyl ketone	0.05	0.33
☐ Nitrobenzene	0.66	0.125
☐ Pyridine	1.12	0.33
☐ Tetrachloroethylene	0.079	0.05
☐ Toluene	1.12	0.33
☐ 1,1,1-Trichloroethane	1.05	0.41
☐ 1,1,2-Trichloro-1,2,2-Trifluoroethane	1.05	0.96
☐ Trichloroethylene	0.062	0.091
☐ Trichlorofluoromethane	0.05	0.96
☐ Xylene	0.05	0.15

268.43 Table CCW—Constituent Concentrations In Wastes

F001, F002, F003, F004 and F005 wastewaters (Pharmaceutical Industry)	Concentration (in mg/l)
☐ Methylene chloride	0.44

F002 and F005	Concentration in mg/l(ww)	mg/kg(nww)
☐ 1,1,2–Trichloroethane (F002)	0.030	7.6
☐ Benzene (F005)	0.070	3.7
☐ 2-Nitropropane (F005)	Required Method(s)	
☐ 2-Ethoxyethanol (F005)	Required Method(s)	

California List Waste (applies to all states)

Liquid hazardous waste including free liquids associated with any solid or sludge containing the following constituents or characteristic:

	Concentration	Treatment Standard
pH ≤ 2.0		Neutralize/Stabilize
Cyanides	≥1,000	Cyanides Destruction/Stabilize
Arsenic	≥ 500	Metals Recovery/Solidification
Cadmium	≥ 100	Metals Recovery/Solidification
Chromium (VI)	≥ 500	Metals Recovery/Solidification
Lead	≥ 500	Metals Recovery/Solidification
Mercury	≥ 20	Metals Recovery/Solidification
Nickel	≥ 134	Metals Recovery/Solidification
Selenuim	≥ 100	Metals Recovery/Solidification
Thallium	≥ 130	Metals Recovery/Solidification
[illegible]	≥ 50	Incineration/High Efficiency Boiler
[illegible], sludge, or liquid Halogenated Organic [illegible]pounds (HOCs) listed in 40 CFR 268 Appendix II	≥1,000	Incineration/Carbon Adsorption/Solvent Extraction

01–F005 spent vents.	NA	Table 2 in 268.42 and Table CCW in 268.43.	Acetone	67-64-1	0.05	0.59
			n-Butyl alcohol	71-36-3	5.0	5.0
			Carbon disulfide	75-15-0	1.05	4.81
			Carbon tetrachloride	56-23-5	0.05	0.96
			Chlorobenzene	108-90-7	0.15	0.05
			Cresols (and cresylic acid)		2.82	0.75
			Cyclohexanone	108-94-1	0.125	0.75
			1,2-Dichlorobenzene	95-50-1	0.65	0.125
			Ethyl acetate	141-78-6	0.05	0.75
			Ethylbenzene	100-41-4	0.05	0.053
			Ethyl ether	60-29-7	0.05	0.75
			Isobutanol	78-83-1	5.0	5.0
			Methanol	67-56-1	0.25	0.75
			Methylene chloride	75-9-2	0.20	0.96
			Methyl ethyl ketone	78-93-3	0.05	0.75
			Methyl isobutyl ketone	108-10-1	0.05	0.33
			Nitrobenzene	98-95-3	0.66	0.125
			Pyridine	110-86-1	1.12	0.33
			Tetrachloroethylene	127-18-4	0.079	0.05
			Toluene	108-88-3	1.12	0.33
			1,1,1-Trichloroethane	71-55-6	1.05	0.41
			1,1,2-Trichloro- 1,2,2-Trifluoroethane	76-13-1	1.05	0.96
			Trichloroethylene	79-01-6	0.062	0.091
			Trichlorofluoromethane	75-69-4	0.05	0.96
			Xylene		0.05	0.15
F006	NA	Table CCW in 268.43.	Cadmium	7440-43-9	NA	0.066
			Chromium (Total)	7440-47-32	NA	5.2
			Lead	7439-92-1	NA	0.51
			Nickel	7440-02-0	NA	0.32
			Silver	7440-22-4	NA	0.072
F007	NA	Table CCW in 268.43.	Cadmium	7440-43-9	NA	0.066
			Chromium (Total)	7440-47-32	NA	5.2
			Lead	7439-92-1	NA	0.51
			Nickel	7440-02-0	NA	0.32
			Silver	7440-22-4	NA	0.072
F008	NA	Table CCW in 268.43.	Cadmium	7440-43-9	NA	0.066
			Chromium (Total)	7440-47-32	NA	5.2
			Lead	7439-92-1	NA	0.51
			Nickel	7440-02-0	NA	0.32
			Silver	7440-22-4	NA	0.072
F009	NA	Table CCW in 268.43.	Cadmium	7440-43-9	NA	0.066
			Chromium (Total)	7440-47-32	NA	5.2
			Lead	7439-92-1	NA	0.51
			Nickel	7440-02-0	NA	0.32
			Silver	7440-22-4	NA	0.072

268.41 TABLE CCWE.—CONSTITUENT CONCENTRATIONS IN WASTE EXTRACT—Continued

Waste code	Commercial chemical name	See also	Regulated hazardous constituent	CAS No. for regulated hazardous constituent	Wastewaters		Nonwastewaters	
					Concentration (mg/l)	Notes	Concentration (mg/l)	Notes
F011	NA	Table CCW in 268.43.	Cadmium	7440-43-9	NA		0.066	
			Chromium (Total)	7440-47-32	NA		5.2	
			Lead	7439-92-1	NA		0.51	
			Nickel	7440-02-0	NA		0.32	
			Silver	7440-22-4	NA		0.072	
F012	NA	Table CCW in 268.43.	Cadmium	7440-43-9	NA		0.066	
			Chromium (Total)	7440-47-32	NA		5.2	
			Lead	7439-92-1	NA		0.51	
			Nickel	7440-02-0	NA		0.32	
			Silver	7440-22-4	NA		0.072	
F019	NA	Table CCW in 268.43.	Chromium (Total)	7440-47-32	NA		5.2	
F020–F023 and F026–F028 dioxin containing wastes [1].	NA	NA	HxCDD-All Hexachloro-dibenzo-p-dioxins		<1 ppb		<1 ppb	
			HxCDF-All Hexachloro-dibenzofurans					
			PeCDD-All Pentachloro-dibenzo-p-dioxins		<1 ppb		<1 ppb	
			PeCDF-All Pentachloro-dibenzofurans					
			TCDD-All Tetrachloro-dibenzo-p-dioxins		<1 ppb		<1 ppb	
			TCDF-All Tetrachloro-dibenzofurans					
			2,4,5-Trichlorophenol		<1 ppb		<1 ppb	
			2,4,6-Trichlorophenol					
			2,3,4,6-Tetrachlorophenol		<1 ppb		<1 ppb	
			Pentachlorophenol					
				95-95-4	<1 ppb		<1 ppb	
				88-06-2	<0.05 ppm		<0.05 ppm	
				58-90-2	<0.05 ppm		<0.05 ppm	
				87-86-5	<0.01 ppm		<0.01 ppm	
F024	NA	Table CCW in 268.43.	Chromium (Total)	7440-47-32	NA		0.073	
			Lead	7439-92-1	NA		[Reserved]	
			Nickel	7440-02-0	NA		0.068	
F039	NA	Table CCW in 268.43.	Antimony	7440-36-0	NA		0.23	
			Arsenic	7440-38-2	NA		5.0	
			Barium	7440-39-3	NA		52	
			Cadmium	7440-43-9	NA		0.066	
			Chromium (Total)	7440-47-32	NA		5.2	
			Lead	7439-92-1	NA		0.51	
			Mercury	7439-97-6	NA		0.025	
			Nickel	7440-02-0	NA		0.32	
			Selenium	7782-49-2	NA		5.7	
			Silver	7440-22-4	NA		0.072	
K001	NA	Table CCW in 268.43.	Lead	7439-92-1	NA		0.51	

K002	NA	Table CCW in 268.43.	Chromium (Total)	7440-47-32	NA		0.094	
			Lead	7439-92-1	NA		0.37	
K003	NA	Table CCW in 268.43.	Chromium (Total)	7440-47-32	NA		0.094	
			Lead	7439-92-1	NA		0.37	
K004	NA	Table CCW in 268.43.	Chromium (Total)	7440-47-32	NA		0.094	
			Lead	7439-92-1	NA		0.37	
K005	NA	Table CCW in 268.43.	Chromium (Total)	7440-47-32	NA		0.094	
			Lead	7439-92-1	NA		0.37	
K006 (anhydrous)	NA	Table CCW in 268.43.	Chromium (Total)	7440-47-32	NA		0.094	
			Lead	7439-92-1	NA		0.37	
K006 (hydrated)	NA	Table CCW in 268.43.	Chromium (Total)	7440-47-32	NA		5.2	
K007	NA	Table CCW in 268.43.	Chromium (Total)	7440-47-32	NA		0.094	
			Lead	7439-92-1	NA		0.37	
K008	NA	Table CCW in 268.43.	Chromium (Total)	7440-47-32	NA		0.094	
			Lead	7439-92-1	NA		0.37	
K015	NA	Table CCW in 268.43.	Chromium (Total)	7440-47-32	NA		1.7	
			Nickel	7440-02-0	NA		0.2	
K021	NA	Table CCW in 268.43.	Antimony	7440-36-0	NA		0.23	
K022	NA	Table CCW in 268.43.	Chromium (Total)	7440-47-32	NA		5.2	
			Nickel	7440-02-0	NA		0.32	
K028	NA	Table CCW in 268.43.	Chromium (Total)	7440-47-32	NA		0.073	
			Lead	7439-92-1	NA		0.021	
			Nickel	7440-02-0	NA		0.068	
K031	NA	Table CCW in 268.43.	Arsenic	7440-38-2	NA		5.6	[1]
K046	NA	Table CCW in 268.43.	Lead	7439-92-1	NA		0.18	
K048	NA	Table CCW in 268.43.	Chromium (Total)	7440-47-32	NA		1.7	
			Nickel	7440-02-0	NA		0.20	
K049	NA	Table CCW in 268.43.	Chromium (Total)	7440-47-32	NA		1.7	
			Nickel	7440-02-0	NA		0.20	
K050	NA	Table CCW in 268.43.	Chromium (Total)	7440-47-32	NA		1.7	
			Nickel	7440-02-0	NA		0.20	
K051	NA	Table CCW in 268.43.	Chromium (Total)	7440-47-32	NA		1.7	
			Nickel	7440-02-0	NA		0.20	
K052	NA	Table CCW in 268.43.	Chromium (Total)	7440-47-32	NA		1.7	
			Nickel	7440-02-0	NA		0.20	
K061 (Low Zinc Subcategory—less than 15% Total Zinc).	NA	Table CCW in 268.43.	Cadmium	7440-43-9	NA		0.14	
			Chromium (Total)	7440-47-32	NA		5.2	
			Lead	7439-92-1	NA		0.24	
			Nickel	7440-02-0	NA		0.32	
K061 (High Zinc Subcategory—greater than 15% Total Zinc)—Effective until August 7th 1991).	NA	Table CCW in 268.43.	Cadmium	7440-43-9	NA		0.14	
			Chromium (Total)	7440-47-32	NA		5.2	
			Lead	7439-92-1	NA		0.24	
			Nickel	7440-02-0	NA		0.32	

				constituent	(mg/l)		
K062	NA	Table CCW in 268.43.	Chromium (Total)	7440-47-32	NA	0.094	
			Lead	7439-92-1	NA	0.37	
K069 (Calcium Sulfate Subcategory).	NA	Table 2 in 268.42 and Table CCW in 268.43.	Cadmium	7440-43-9	NA	0.14	
			Lead	7439-92-1	NA	0.24	
K071	NA	Table CCW in 268.43.	Mercury	7439-97-6	NA	0.025	
K083	NA	Table CCW in 268.43.	Nickel	7440-02-2	NA	0.068	
K084	NA	Table CCW in 268.43.	Arsenic	7440-38-2	NA	5.6	(1)
K086	NA	Table CCW in 268.43.	Chromium (Total)	7440-47-32	NA	0.094	
			Lead	7439-92-1	NA	037	
K087	NA	Table CCW in 268.43.	Lead	7439-92-1	NA	0.51	
K100	NA	Table CCW in 268.43.	Cadmium	7440-43-9	NA	0.066	
			Chromium (Total)	7440-47-32	NA	5.2	
			Lead	7439-92-1	NA	0.51	
K101	NA	Table CCW in 268.43.	Arsenic	7440-38-2	NA	5.6	(1)
K102	NA	Table CCW in 268.43.	Arsenic	7440-38-2	NA	5.6	(1)
K106 (Low Mercury Subcategory—less than 260 mg/kg Mercury—residues from RMERC).	NA	Table 2 in 268.42 and Table CCW in 268.43.	Mercury	7439-97-6	NA	0.020	
K106 (Low Mercury Subcategory—less than 260 mg/kg Mercury—that are not residues from RMERC).	NA	Table 2 in 268.42 and Table CCW in 268.43.	Mercury	7439-97-6	NA	0.025	
K115	NA	Table CCW in 268.43.	Nickel	7440-02-0	NA	0.32	
P010	Arsenic acid	Table CCW in 268.43.	Arsenic	7440-38-2	NA	5.6	(1)
P011	Arsenic pentoxide	Table CCW in 268.43.	Arsenic	7440-38-2	NA	5.6	(1)

P012	Arsenic trioxide	Table CCW in 268.43.	Arsenic	7440-38-2	NA	5.6	(1)
P013	Barium cyanide	Table CCW in 268.43.	Barium	7440-39-3	NA	52	
P036	Dichlorophenylarsine.	Table CCW in 268.43.	Arsenic	7440-38-2	NA	5.6	(1)
P038	Diethylarsine	Table CCW in 268.43.	Arsenic	7440-38-2	NA	5.6	(1)
P065 (Low Mercury Subcategory—Less than 260 mg/kg Mercury—residues from RMERC).	Mercury fulminate	Table 2 in 268.42 and Table CCW in 268.43.	Mercury	7439-97-6	NA	0.20	
P065 (Low Mercury Subcategory—Less than 260 mg/kg Mercury—Incinerator residues (and are not residues from RMERC)).	Mercury fulminate	Table 2 in 268.42 and Table CCW in 268.43.	Mercury	7439-97-6	NA	0.025	
P073	Nickel carbonyl	Table CCW in 268.43.	Nickel	7440-02-0	NA	0.32	
P074	Nickel cyanide	Table CCW in 268.43.	Nickel	7440-02-0	NA	0.32	
P092 (Low Mercury Subcategory—Less than 260 mg/kg Mercury—residues from RMERC).	Phenyl mercury acetate.	Table 2 in 268.42 and Table CCW in 268.43.	Mercury	7439-97-6	NA	0.20	
P092 (Low Mercury Subcategory—Less than 260 mg/kg Mercury—Incinerator residues (and are not residues from RMERC)).	Phenyl mercury acetate.	Table 2 in 268.42 and Table CCW in 268.43.	Mercury	7439-97-6	NA	0.025	
P099	Potassium silver cyanide.	Table CCW in 268.43.	Silver	7440-22-4	NA	0.072	
P103	Selenourea	Table CCW in 268.43.	Selenium	7782-49-2	NA	5.7	
P104	Silver cyanide	Table CCW in 268.43.	Silver	7440-22-4	NA	0.072	
P110	Tetraethyl lead	Table CCW in 268.43.	Lead	7439-92-1	NA	0.51	
P114	Thallium selenite	Table CCW in 268.43.	Selenium	7782-49-2	NA	5.7	

268.41 TABLE CCWE.—CONSTITUENT CONCENTRATIONS IN WASTE EXTRACT—Continued

Waste code	Commercial chemical name	See also	Regulated hazardous constituent	CAS No. for regulated hazardous constituent	Wastewaters		Nonwastewaters	
					Concentration (mg/l)	Notes	Concentration (mg/l)	Notes
U032	Calcium chromate	Table CCW in 268.43.	Chromium (Total)	7440-47-32	NA		0.094	
U051	Creosote	Table CCW in 268.43.	Lead	7439-92-1	NA		0.51	
U136	Cacodylic acid	Table CCW in 268.43.	Arsenic	7440-38-2	NA		5.6	(1)
U144	Lead acetate	Table CCW in 268.43.	Lead	7439-92-1	NA		0.51	
U145	Lead phosphate	Table CCW in 268.43.	Lead	7439-92-1	NA		0.51	
U146	Lead subacetate	Table CCW in 268.43.	Lead	7439-92-1	NA		0.51	
U151 (Low Mercury Subcategory—Less than 260 mg/kg Mercury—residues from RMERC).	Mercury	Table CCW in 268.43 and Table 2 in 268.42.	Mercury	7439-97-6	NA		0.20	
U151 (Low Mercury Subcategory—Less than 260 mg/kg Mercury—that are not residues from RMERC.	Mercury	Table CCW in 268.43 and Table 2 in 268.42.	Mercury	7439-97-6	NA		0.025	
U204	Selenium dioxide	Table CCW in 268.43.	Selenium	7782-49-2	NA		5.7	
U205	Selenium sulfide	Table CCW in 268.43.	Selenium	7782-49-2	NA		5.7	

[1] These treatment standards have been based on EP Leachate analysis but this does not preclude the use of TCLP analysis.
[2] These waste codes are not subcategorized into wastewaters and nonwastewaters.
Note: NA means Not Applicable.

268.43 TABLE CCW.—CONSTITUENT CONCENTRATIONS IN WASTES

Waste code	Commercial chemical name	See also	Regulated hazardous constituent	CAS number for regulated hazardous constituent	Wastewaters		Nonwastewaters	
					Concentration (mg/l)	Notes	Concentration (mg/kg)	Notes
(Reactive nides Sub- gory based on .23(a)(5)).	NA	NA	Cyanides (Total)	57-12-5	(4)		590	(2)
			Cyanides (Amenable)	57-12-5	0.86		30	
	NA	Table CCWE in 268.41	Arsenic	7440-38-2	5.0		NA	
	NA	Table CCWE in 268.41	Barium	7440-39-3	100		NA	
	NA	Table CCWE in 268.41	Cadmium	7440-43-9	1.0		NA	
	NA	Table CCWE in 268.41	Chromium (Total)	7440-47-32	5.0		NA	
	NA	Table CCWE in 268.41	Lead	7439-92-1	5.0		NA	
	NA	Table CCWE in 268.41	Mercury	7439-97-6	0.20		NA	
	NA	Table CCWE in 268.41	Selenium	7782-49-2	1.0		NA	
	NA	Table CCWE in 268.41	Silver	7440-22-4	5.0		NA	
	NA	Table 2 in 268.42	Endrin	720-20-8	NA		0.13	(3)
	NA	Table 2 in 268.42	Lindane	58-89-9	NA		0.066	(3)
	NA	Table 2 in 268.42	Methoxychlor	72-43-5	NA		0.18	(3)
	NA	Table 2 in 268.42	Toxaphene	8001-35-1	NA		1.3	(3)
	NA	Table 2 in 268.42	2,4-D	94-75-7	NA		10.0	(3)
	NA	Table 2 in 268.42	2,4,5-TP (Silvex)	93-76-5	NA		7.9	(3)
-F005 spent ents.	NA	Table CCWE in 268.41 and Table 2 in 268.42.	1,1,2-Trichloroethane	71-55-6	0.030		7.6	(3)
			Benzene	71-43-2	0.070		3.7	(3)
-F005 spent ents rmaceutical stry-Wastewater category).	NA	NA	Methylene chloride	75-09-2	0.44		NA	
	NA	Table CCWE in 268.41	Cyanides (Total)	57-12-5	1.2		590	
			Cyanides (Amenable)	57-12-5	0.86		30	
			Cadmium	7440-43-9	1.6		NA	
			Chromium	7440-47-32	0.32		NA	
			Lead	7439-92-1	0.040		NA	
			Nickel	7440-02-0	0.44		NA	
	NA	Table CCWE in 268.41	Cyanides (Total)	57-12-5	1.9		590	
			Cyanides (Amenable)	57-12-5	0.1		30	
			Chromium (Total)	7440-47-32	0.32		NA	
			Lead	7439-92-1	0.04		NA	
			Nickel	7440-02-0	0.44		NA	

268.43 TABLE CCW.—CONSTITUENT CONCENTRATIONS IN WASTES—Continued

Waste code	Commercial chemical name	See also	Regulated hazardous constituent	CAS number for regulated hazardous constituent	Wastewaters Concentration (mg/l)	Wastewaters Notes	Nonwastewaters Concentration (mg/kg)	Nonwastewaters Notes
[illegible]	NA	Table CCWE in 268.41	Cyanides (Total)	57-12-5	1.9		590	
			Cyanides (Amenable)	57-12-5	0.1		30	
			Chromium	7440-47-32	0.32		NA	
			Lead	7439-92-1	0.04		NA	
			Nickel	7440-02-0	0.44		NA	
F009	NA	Table CCWE in 268.41	Cyanides (Total)	57-12-5	1.9		590	
			Cyanides (Amenable)	57-12-5	0.1		30	
			Chromium	7440-47-32	0.32		NA	
			Lead	7439-92-1	0.04		NA	
			Nickel	7440-02-0	0.44		NA	
F010	NA	NA	Cyanides (Total)	57-12-5	1.9		1.5	
			Cyanides (Amenable)	57-12-5	0.1		NA	
F011	NA	Table CCWE in 268.41	Cyanides (Total)	57-12-5	1.9		110	
			Cyanides (Amenable)	57-12-5	0.1		9.1	
			Chromium (Total)	7440-47-32	0.32		NA	
			Lead	7439-92-1	0.04		NA	
			Nickel	7440-02-0	0.44		NA	
F012	NA	Table CCWE in 268.41	Cyanides (Total)	57-12-5	1.9		110	
			Cyanides (Amenable)	57-12-5	0.1		9.1	
			Chromium (Total)	7440-47-32	0.32		NA	
			Lead	7439-92-1	0.04		NA	
			Nickel	7440-02-0	0.44		NA	
F019	NA	Table CCWE in 268.41	Cyanides (Total)	57-12-5	1.2		590	(3)
			Cyanides (Amenable)	57-12-5	0.86		30	(3)
			Chromium (Total)	7440-47-32	0.32		NA	
F024	NA	Table CCWE in 268.41 and Table 2 in 268.42 (Note: F024 organic standards must be treated via incineration (INCIN)).	2-Chloro-1,3-butadiene	126-99-8	0.28	(1)	0.28	(1)
			3-Chloropropene	107-05-1	0.28	(1)	0.28	(1)
			1,1-Dichloroethane	75-34-3	0.014	(1)	0.014	(1)
			1,2-Dichloroethane	107-06-2	0.014	(1)	0.014	(1)
			1,2-Dichloropropane	78-87-5	0.014	(1)	0.014	(1)
			cis-1,3-Dichloropropene.	10061-01-5	0.014	(1)	0.014	(1)
			trans-1,3-Dichloropropene.	10061-02-6	0.014	(1)	0.014	(1)
			Bis(2-ethylhexyl)-phthalate.	117-81-7	0.036	(1)	1.8	(1)
			Hexachloroethane	67-72-1	0.036	(1)	1.8	(1)
			Chromium (Total)	7440-47-32	0.35		NA	
			Nickel	7440-02-0	0.47		NA	
F025 (Light Ends Subcategory).	NA	NA	Chloroform	67-66-3	0.046	(3)	6.2	(1)
			1,2-Dichloroethane	107-06-2	0.21	(3)	6.2	(1)
			1,1-Dichloroethylene	75-35-4	0.025	(3)	6.2	(1)
			Methylene chloride	75-9-2	0.089	(3)	31	(1)
			Carbon tetrachloride	56-23-5	0.057	(3)	6.2	(1)
			1,1,2-Trichloroethane	79-00-5	0.054	(3)	6.2	(1)
			Trichloroethylene	79-01-6	0.054	(3)	5.6	(1)
			Vinyl chloride	75-01-4	0.27	(3)	33	(1)
F025 (Spent Filters or Aids and Desicants Subcategory).	NA	NA	Chloroform	67-66-3	0.046	(3)	6.2	(1)
			Methylene chloride	75-9-2	0.089	(3)	31	(1)
			Carbon tetrachloride	56-23-5	0.057	(3)	6.2	(1)
			1,1,2-Trichloroethane	79-00-5	0.054	(3)	6.2	(1)
			Trichloroethylene	79-01-6	0.054	(3)	5.6	(1)
			Vinyl chloride	75-01-4	0.27	(3)	33	(1)
			Hexachlorobenzene	118-74-1	0.055	(3)	37	(1)
			Hexachlorobutadiene	87-68-3	0.055	(3)	28	(1)
			Hexachloroethane	67-72-1	0.055	(3)	30	(1)

268.43 TABLE CCW.—CONSTITUENT CONCENTRATIONS IN WASTES—Continued

Waste code	Commercial chemical name	See also	Regulated hazardous constituent	CAS number for regulated hazardous constituent	Wastewaters		Nonwastewaters	
					Concentration (mg/l)	Notes	Concentration (mg/kg)	Notes
F039	NA	Table CCWE in 268.41	Acetone	67-64-1	0.28	(3)	160	(1)
			Acenaphthalene	208-96-8	0.059	(3)	3.4	(1)
			Acenaphthene	83-32-9	0.059	(3)	4.0	(1)
			Acetonitrile	75-05-8	0.17	(3)	NA	
			Acetophenone	96-86-2	0.010	(3)	9.7	(1)
			2-Acetylaminofluorene	53-96-3	0.059	(3)	140	(1)
			Acrolein					
			Acrylonitrile	107-02-8	0.29	(3)	NA	
			Aldrin	107-13-1	0.24	(3)	84	(1)
				309-00-2	0.021	(3)	0.066	(1)
			4-Aminobiphenyl	92-67-1	0.13	(3)	NA	
			Aniline	62-53-3	0.81	(3)	14	(1)
			Anthracene	120-12-7	0.059	(3)	4.0	(1)
			Aramite	140-57-8	0.36	(3)	NA	
			Aroclor 1016	12674-11-2	0.013	(3)	0.92	(1)
			Aroclor 1221	11104-28-2	0.014	(3)	0.92	(1)
			Aroclor 1232	11141-16-5	0.013	(3)	0.92	(1)
			Aroclor 1242	53469-21-9	0.017	(3)	0.92	(1)
			Aroclor 1248	12672-29-6	0.013	(3)	0.92	(1)
			Aroclor 1254	11097-69-1	0.014	(3)	1.8	(1)
			Aroclor 1260	11096-82-5	0.014	(3)	1.8	(1)
			alpha-BHC	319-84-6	0.00014	(3)	0.066	(1)
			beta-BHC	319-85-7	0.00014	(3)	0.066	(1)
			delta-BHC	319-86-8	0.023	(3)	0.066	(1)
			gamma-BHC	58-89-9	0.0017	(3)	0.066	(1)
			Benzene	71-43-2	0.14	(3)	36	(1)
			Benz(a)anthracene	56-55-3	0.059	(3)	8.2	(1)
			Benzo(b)- fluoranthene	205-99-2	0.055	(3)	3.4	(1)
			Benzo(k)- fluoranthene	207-08-9	0.059	(3)	3.4	(1)
			Benzo(g,h,i)- perylene	191-24-2	0.0055	(3)	1.5	(1)
			Benzo(a)pyrene	50-32-8	0.061	(3)	8.2	(1)
			Bromodichloromethane	75-27-4	0.35	(3)	15	(1)
			Bromoform (Tribromomethane).	75-25-2	0.63	(3)	15	(1)
			Bromomethane (methyl bromide).	74-83-9	0.11	(3)	15	(1)
			4-Bromophenyl phenyl ether.	101-55-3	0.055	(3)	15	(1)
			n-Butyl alcohol	71-36-3	5.6	(3)	2.6	(1)
			Butyl benzyl phthalate	85-68-7	0.017	(3)	7.9	(1)
			2-sec-Butyl-4,6-dinitrophenol.	88-85-7	0.066	(3)	2.5	(1)
			Carbon tetrachloride	56-23-5	0.057	(3)	5.6	(1)
			Carbon disulfide	75-15-0	0.014	(3)	NA	
			Chlordane	57-74-9	0.0033	(3)	0.13	(1)
			p-Chloroaniline	106-47-8	0.46	(3)	16	(1)
			Chlorobenzene	108-90-7	0.057	(3)	5.7	(1)
			Chlorobenzilate	510-15-6	0.10	(3)	NA	
			2-Chloro-1,3-butadiene	126-99-8	0.057	(3)	NA	
			Chlorodibromomethane	124-48-1	0.057	(3)	15	(1)
			Chloroethane	75-00-3	0.27	(3)	6.0	(1)
			bis(2-Chloroethoxy) methane.	111-91-1	0.036	(3)	7.2	(1)
			bis(2-Chloroethyl) ether	111-44-4	0.033	(3)	7.2	(1)
			Chloroform	67-66-3	0.046	(3)	5.6	(1)
			bis(2-Chloroisopropyl) ether.	39638-32-9	0.055	(3)	7.2	(1)
			p-Chloro-m-cresol	59-50-7	0.018	(3)	14	(1)
			Chloromethane (Methyl chloride).	74-87-3	0.19	(3)	33	(1)
			2-Chloronaphthalene	91-8-7	0.055	(3)	5.6	(1)
			2-Chlorophenol	95-57-8	0.044	(3)	5.7	(1)
			3-Chloropropylene	107-05-1	0.036	(3)	28	(1)
			Chrysene	218-01-9	0.059	(3)	8.2	(1)
			o-Cresol	95-48-7	0.11	(3)	5.6	(1)
			Cresol (m- and p- isomers).		0.77	(3)	3.2	(1)
			Cyclohexanone	108-94-1	0.36	(3)	NA	
			1,2-Dibromo-3-chloropropane.	96-12-8	0.11	(3)	15	(1)
			1,2-Dibromoethane (Ethylene dibromide).	106-93-4	0.028	(3)	15	(1)
			Dibromomethane	74-95-3	0.11	(3)	15	(1)
			2,4-Dichlorophenoxy-acetic acid (2, 4-D).	94-75-7	0.72	(3)	10	(1)
			o,p'-DDD	53-19-0	0.023	(3)	0.087	(1)
			p,p'-DDD	72-54-8	0.023	(3)	0.087	(1)
			o,p'-DDE	3424-82-6	0.031	(3)	0.087	(1)
			p,p'-DDE	72-55-9	0.031	(3)	0.087	(1)
			o,p'-DDT	789-02-6	0.0039	(3)	0.087	(1)
			p,p'-DDT	50-29-3	0.0039	(3)	0.087	(1)
			Dibenz(a,h) anthracene	53-70-3	0.055	(3)	8.2	(1)
			Dibenzo(a,e) pyrene	192-65-4	0.061	(3)	NA	
			m-Dichlorobenzene	541-73-1	0.036	(3)	6.2	(1)
			o-Dichlorobenzene	95-50-1	0.088	(3)	6.2	(1)
			p-Dichlorobenzene	106-46-7	0.090	(3)	6.2	(1)
			Dichlorodifluoromethane.	75-71-8	0.23	(3)	7.2	(1)
			1,1-Dichloroethane	75-34-3	0.059	(3)	7.2	(1)
			1,2-Dichloroethane	107-06-2	0.21	(3)	7.2	(1)
			1,1-Dichloroethylene	75-35-4	0.025	(3)	33	(1)

268.43 TABLE CCW.—CONSTITUENT CONCENTRATIONS IN WASTES—Continued

Waste code	Commercial chemical name	See also	Regulated hazardous constituent	CAS number for regulated hazardous constituent	Wastewaters		Nonwastewaters	
					Concentration (mg/l)	Notes	Concentration (mg/kg)	Notes
			trans-1,2-Dichloroethylene.		0.054	(1)	33	(1)
			2,4-Dichlorophenol	120-83-2	0.044	(1)	14	(1)
			2,6-Dichlorophenol	87-65-0	0.044	(1)	14	(1)
			1,2-Dichloropropane	78-87-5	0.85	(1)	18	(1)
			cis-1,3-Dichloropropene.	10061-01-5	0.036	(1)	18	(1)
			trans-1,3-Dichloropropene.	10061-02-6	0.036	(1)	18	(1)
			Dieldrin	60-57-1	0.017	(1)	0.13	(1)
			Diethyl phthalate	84-66-2	0.20	(1)	28	(1)
			2,4-Dimethyl phenol	105-67-9	0.036	(1)	14	(1)
			Dimethyl phthalate	131-11-3	0.047	(1)	28	(1)
			Di-n-butyl phthalate	84-74-2	0.057	(1)	28	(1)
			1,4-Dinitrobenzene	100-25-4	0.32	(1)	2.3	(1)
			4,6-Dinitro-o-cresol	534-52-1	0.28	(1)	160	(1)
			2,4-Dinitrophenol	51-28-5	0.12	(1)	160	(1)
			2,4-Dinitrotoluene	121-14-2	0.32	(1)	140	(1)
			2,6-Dinitrotoluene	606-20-2	0.55	(1)	28	(1)
			Di-n-octyl phthalate	117-84-0	0.017	(1)	28	(1)
			Di-n-propylnitrosoamine	621-64-7	0.40	(1)	14	(1)
			Diphenylamine	122-39-4	0.52	(1)	NA	
			1,2-Diphenyl hydrazine	122-66-7	0.087	(1)	NA	
			Diphenyl nitrosamine	621-64-7	0.40	(1)	NA	
			1, 4-Dioxane	123-91-1	0.12	(1)	170	(1)
			Disulfoton	298-04-4	0.017	(1)	6.2	(1)
			Endosulfan I	939-98-8	0.023	(1)	0.066	(1)
			Endosulfan II	33213-6-5	0.029	(1)	0.13	(1)
			Endosulfan sulfate	1031-07-8	0.029	(1)	0.13	(1)
			Endrin	72-20-8	0.0028	(1)	0.13	(1)
			Endrin aldehyde	7421-93-4	0.025	(1)	0.13	(1)
			Ethyl acetate	141-78-6	0.34	(1)	33	(1)
			Ethyl cyanide	107-12-0	0.24	(1)	360	(1)
			Ethyl benzene	100-41-4	0.057	(1)	6.0	(1)
			Ethyl ether	60-29-7	0.12	(1)	160	(1)
			bis(2-Ethylhexyl) phthalate.	117-81-7	0.28	(1)	28	(1)
			Ethyl methacrylate	97-63-2	0.14	(1)	160	(1)
			Ethylene oxide	75-21-8	0.12	(1)	NA	
			Famphur	52-85-7	0.017	(1)	15	(1)
			Fluoranthene	206-44-0	0.068	(1)	8.2	(1)
			Fluorene	86-73-7	0.059	(1)	4.0	(1)
			Fluorotrichloromethane	75-69-4	0.020	(1)	33	(1)
			Heptachlor	76-44-8	0.0012	(1)	0.066	(1)
			Heptachlor epoxide	1024-57-3	0.016	(1)	0.066	(1)
			Hexachlorobenzene	118-74-1	0.055	(1)	37	(1)
			Hexachlorobutadiene	87-68-3	0.055	(1)	28	(1)
			Hexachlorocyclopentadiene.	77-47-4	0.057	(1)	3.6	(1)
			Hexachlorodibenzofurans.		0.000063	(1)	0.001	(1)
			Hexachlorodibenzo-p-dioxins.		0.000063	(1)	0.001	(1)
			Hexachloroethane	67-72-1	0.055	(1)	28	(1)
			Hexachloropropene	1888-71-7	0.035	(1)	28	(1)
			Indeno(1,2,3-c,d)pyrene.	193-39-5	0.0055	(1)	8.2	(1)
			Iodomethane	74-88-4	0.19	(1)	65	(1)
			Isobutanol	78-83-1	5.6	(1)	170	(1)
			Isodrin	465-73-6	0.021	(1)	0.066	(1)
			Isosafrole	120-58-1	0.081	(1)	2.6	(1)
			Kepone	143-50-8	0.0011	(1)	0.13	(1)
			Methacrylonitrile	126-98-7	0.24	(1)	84	(1)
			Methanol	67-56-1	5.6	(1)	NA	
			Methapyrilene	91-80-5	0.081	(1)	1.5	(1)
			Methoxychlor	72-43-5	0.25	(1)	0.18	(1)
			3-Methylcholanthrene	56-49-5	0.0055	(1)	15	(1)
			4,4-Methylene-bis-(2-chloroaniline).	101-14-4	0.50	(1)	35	(1)
			Methylene chloride	75-09-2	0.089	(1)	33	(1)
			Methyl ethyl ketone	78-93-3	0.28	(1)	36	(1)
			Methyl isobutyl ketone	108-10-1	0.14	(1)	33	(1)
			Methyl methacrylate	80-62-6	0.14	(1)	160	(1)
			Methyl methanesulfonate.	66-27-3	0.018	(1)	NA	
			Methyl parathion	298-00-0	0.014	(1)	4.6	(1)
			Naphthalene	91-20-3	0.059	(1)	3.1	(1)
			2-Naphthylamine	91-59-8	0.52	(1)	NA	
			p-Nitroaniline	100-01-6	0.028	(1)	28	(1)
			Nitrobenzene	98-95-3	0.068	(1)	14	(1)
			5-Nitro-o-toluidine	99-55-8	0.32	(1)	28	(1)
			4-Nitrophenol	100-02-7	0.12	(1)	29	(1)
			N-Nitrosodiethylamine	55-18-5	0.40	(1)	28	(1)
			N-Nitrosodimethylamine.	62-75-9	0.40	(1)	NA	
			N-Nitroso-di-n-butylamine.	924-16-3	0.40	(1)	17	(1)
			N-Nitrosomethylethylamine.	10595-95-6	0.40	(1)	2.3	(1)
			N-Nitrosomorpholine	59-89-2	0.40	(1)	2.3	(1)
			N-Nitrosopiperidine	100-75-4	0.013	(1)	35	(1)

268.43 TABLE CCW.—CONSTITUENT CONCENTRATIONS IN WASTES—Continued

Waste code	Commercial chemical name	See also	Regulated hazardous constituent	CAS number for regulated hazardous constituent	Wastewaters		Nonwastewaters	
					Concentration (mg/l)	Notes	Concentration (mg/kg)	Notes
			N-Nitrosopyrrolidine	930-55-2	0.013	(2)	35	(1)
			Parathion	56-38-2	0.014	(2)	4.6	(1)
			Pentachlorobenzene	608-93-5	0.055	(2)	37	(1)
			Pentachlorodibenzo-furans.		0.000063	(2)	0.001	(1)
			Pentachlorodibenzo-p-dioxins.		0.000063	(2)	0.001	(1)
			Pentachloronitrobenzene.	82-68-8	0.055	(2)	4.8	(1)
			Pentachlorophenol	87-86-5	0.089	(2)	7.4	(1)
			Phenacetin	62-44-2	0.081	(2)	16	(1)
			Phenanthrene	85-01-8	0.059	(2)	3.1	(1)
			Phenol	108-95-2	0.039	(2)	6.2	(1)
			Phorate	298-02-2	0.021	(2)	4.6	(1)
			Phthalic anhydride	85-44-9	0.069	(2)	NA	
			Pronamide	23950-58-5	0.093	(2)	1.5	(1)
			Pyrene	129-00-0	0.067	(2)	8.2	(1)
			Pyridine	110-86-1	0.014	(2)	16	(1)
			Safrole	94-59-7	0.081	(2)	22	(1)
			Silvex (2,4,5-TP)	93-72-1	0.72	(2)	7.9	(1)
			2,4,5-T	93-76-5	0.72	(2)	7.9	(1)
			1,2,4,5,-Tetrachlorobenzene.	95-94-3	0.055	(2)	19	(1)
			Tetrachlorodibenzo-furans.		0.000063	(2)	0.001	(1)
			Tetrachlorodibenzo-p-dioxins.		0.000063	(2)	0.001	(1)
			1,1,1,2-Tetrachloroethane.	630-20-6	0.057	(2)	42	(1)
			1,1,2,2-Tetrachloroethane.	79-34-6	0.057	(2)	42	(1)
			Tetrachloroethylene	127-18-4	0.056	(2)	5.6	(1)
			2,3,4,6-Tetrachlorophenol.	58-90-2	0.030	(2)	37	(1)
			Toluene	108-88-3	0.080	(2)	28	(1)
			Toxaphene	8001-35-1	0.0095	(2)	1.3	(1)
			1,2,4-Trichlorobenzene	120-82-1	0.055	(2)	19	(1)
			1,1,1-Trichloroethane	71-55-6	0.054	(2)	5.6	(1)
			1,1,2-Trichloroethane	79-00-5	0.054	(2)	5.6	(1)
			Trichloroethylene	79-01-6	0.054	(2)	5.6	(1)
			2,4,5-Trichlorophenol	95-95-4	0.18	(2)	37	(1)
			2,4,6-Trichlorophenol	88-06-2	0.035	(2)	37	(1)
			1,2,3-Trichloropropane	96-18-4	0.85	(2)	28	(1)
			1,1,2-Trichloro-1,2,2-trifluoro-ethane.	76-13-1	0.057	(2)	28	(1)
			Tris(2,3-dibromopropyl) phosphate.	126-72-7	0.11	(2)	NA	
			Vinyl chloride	75-01-4	0.27	(2)	33	(1)
			Xylene(s)		0.32	(2)	28	(1)
			Cyanides (Total)	57-12-5	1.2	(2)	1.8	(1)
			Fluoride	16984-48-8	35	(2)	NA	
			Sulfide	8496-25-8	14	(2)	NA	
			Antimony	7440-36-0	1.9	(2)	NA	
			Arsenic	7440-38-2	1.4	(2)	NA	
			Barium	7440-39-3	1.2	(2)	NA	
			Beryllium	7440-41-7	0.82	(2)	NA	
			Cadmium	7440-43-9	0.20	(2)	NA	
			Chromium (Total)	7440-47-32	0.37	(2)	NA	
			Copper	7440-50-8	1.3	(2)	NA	
			Lead	7439-92-1	0.28	(2)	NA	
			Mercury	7439-97-6	0.15	(2)	NA	
			Nickel	7440-02-0	0.55	(2)	NA	
			Selenium	7782-49-2	0.82	(2)	NA	
			Silver	7440-22-4	0.29	(2)	NA	
			Thallium	7440-28-0	1.4	(2)	NA	
			Vanadium	7440-62-2	0.042	(2)	NA	
			Zinc	7440-66-6	1.0	(2)	NA	
K001	NA	Table CCWE in 268.41	Naphthalene	91-20-3	0.031	(1)	1.5	(1)
			Pentachlorophenol	87-86-5	0.18	(1)	7.4	(1)
			Phenanthrene	85-01-8	0.031	(1)	1.5	(1)
			Pyrene	129-00-0	0.028	(1)	1.5	(1)
			Toluene	108-88-3	0.028	(1)	28	(1)
			Xylenes (Total)		0.032	(1)	33	(1)
			Lead	7439-92-1	0.037		NA	
K002	NA	Table CCWE in 268.41	Chromium (Total)	7440-47-32	0.9	(2)	NA	
			Lead	7439-92-1	3.4	(2)	NA	
K003	NA	Table CCWE in 268.41	Chromium (Total)	7440-47-32	0.9	(2)	NA	
			Lead	7439-92-1	3.4	(2)	NA	
K004	NA	Table CCWE in 268.41	Chromium (Total)	7440-47-32	0.9	(2)	NA	
			Lead	7439-92-1	3.4	(2)	NA	⑥
K005	NA	Table CCWE in 268.41	Chromium (Total)	7440-47-32	0.9	(2)	NA	
			Lead	7439-92-1	3.4	(2)	NA	
			Cyanides (Total)	57-12-5	0.74	(2)	(4)	
K006	NA	Table CCWE in 268.41	Chromium (Total)	7440-47-32	0.9	3.4	(2)	NA
			Lead	7439-92-1			(2)	NA
K007	NA	Table CCWE in 268.41	Chromium (Total)	7440-47-32	0.9	(2)	NA	
			Lead	7439-92-1	3.4	(2)	NA	
			Cyanides (Total)	57-12-5	0.74	(2)	(4)	
K008	NA	Table CCWE in 268.41	Chromium (Total)	7440-47-32	0.9	(2)	NA	
			Lead	7439-92-1	3.4	(2)	NA	
K009	NA	NA	Chloroform	67-66-3	0.1		6.0	(1)

268.43 TABLE CCW.—CONSTITUENT CONCENTRATIONS IN WASTES—Continued

Waste code	Commercial chemical name	See also	Regulated hazardous constituent	CAS number for regulated hazardous constituent	Wastewaters		Nonwastewaters	
					Concentration (mg/l)	Notes	Concentration (mg/kg)	Notes
K010	NA	NA	Chloroform	67-66-3	0.1		6.0	(1)
K011	NA	NA	Acetonitrile	75-05-8	38		1.8	(1)
			Acrylonitrile	107-13-1	0.06		1.4	(1)
			Acrylamide	79-06-1	19		23	(1)
			Benzene	71-43-2	0.02		0.03	(1)
K013	NA	NA	Cyanide (Total)	57-12-5	21		57	
			Acetonitrile	75-05-8	38		1.8	(1)
			Acrylonitrile	107-13-1	0.06		1.4	(1)
			Acrylamide	79-06-1	19		23	(1)
			Benzene	71-43-2	0.02		0.03	(1)
K014	NA	NA	Cyanide (Total)	57-12-5	21		57	
			Acetonitrile	75-05-8	38		1.8	(1)
			Acrylonitrile	107-13-1	0.06		1.4	(1)
			Acrylamide	79-06-1	19		23	(1)
			Benzene	71-43-2	0.02		0.03	(1)
K015	NA	Table CCWE in 268.41	Cyanide (Total)	57-12-5	21		57	
			Anthracene	120-12-7	1.0		3.4	(1)
			Benzal Chloride	98-87-3	0.28		6.2	(1)
			Sum of Benzo(b) fluoranthene and Benzo(k) fluoranthene.	205-99-2 207-08-9	0.29		3.4	(1)
			Phenanthrene	85-01-8	0.27		3.4	(1)
			Toluene	108-88-3	0.15		6.0	(1)
			Chromium (Total)	7440-47-32	0.32		NA	
K016	NA	NA	Nickel	7440-02-0	0.44		NA	
			Hexachlorobenzene	118-74-1	0.033	(1)	28	(1)
			Hexachlorobutadiene	87-68-3	0.007	(1)	5.6	(1)
			Hexachlorocyclopentadiene.	77-47-4	0.007	(1)	5.6	(1)
			Hexachloroethane	67-72-1	0.033	(1)	28	(1)
K017	NA	NA	Tetrachloroethene	127-18-4	0.007	(1)	6.0	(1)
			1,2-Dichloropropane	78-87-5	0.85	(1,2)	18	(1)
			1,2,3-Trichloropropane	96-18-4	0.85	(1,2)	28	(1)
K018	NA	NA	Bis(2-chloroethyl)ether	111-44-4	0.033	(1,2)	7.2	(1)
			Chloroethane	75-00-3	0.007	(1)	6.0	(1)
			Chloromethane	74-87-3	0.007	(1)	NA	
			1,1-Dichloroethane	75-34-3	0.007	(1)	6.0	(1)
			1,2-Dichloroethane	107-06-2	0.007	(1)	6.0	(1)
			Hexachlorobenzene	118-74-1	0.033	(1)	28	(1)
			Hexachlorobutadiene	87-68-3	0.007	(1)	5.6	(1)
			Hexachloroethane	67-72-1	NA		28	(1)
			Pentachloroethane	76-01-7	0.007	(1)	5.6	(1)
			1,1,1-Trichloroethane	71-55-6	0.007	(1)	6.0	(1)
K019	NA	NA	Bis(2-chloroethyl)ether	111-44-4	0.007	(1)	5.6	(1)
			Chlorobenzene	108-90-7	0.006	(1)	6.0	(1)
			Chloroform	67-66-3	0.007	(1)	6.0	(1)
			p-Dichlorobenzene	106-46-7	0.008	(1)	NA	
			1,2-Dichloroethane	107-06-2	0.007	(1)	6.0	(1)
			Fluorene	86-73-7	0.007	(1)	NA	
			Hexachloroethane	67-72-1	0.033	(1)	28	(1)
			Naphthalene	91-20-3	0.007	(1)	5.6	(1)
			Phenanthrene	85-01-8	0.007	(1)	5.6	(1)
			1,2,4,5-Tetrachlorobenzene.	95-94-3	0.017	(1)	NA	
			Tetrachloroethene	127-18-4	0.007	(1)	6.0	(1)
			1,2,4-Trichlorobenzene	120-82-1	0.023	(1)	19	(1)
			1,1,1-Trichloroethane	71-55-6	0.007	(1)	6.0	(1)
K020	NA	NA	1,2-Dichloroethane	107-06-2	0.007	(1)	6.0	(1)
			1,1,2,2-Tetrachloroethane.	79-34-5	0.007	(1)	5.6	(1)
			Tetrachloroethene	127-18-4	0.007	(1)	6.0	(1)
K021	NA	Table CCWE in 268.41	Chloroform	67-66-3	0.046	(2)	6.2	(1)
			Carbon tetrachloride	56-23-5	0.057	(2)	6.2	(1)
			Antimony	7440-36-0	0.60	(2)	NA	(1)
K022	NA	Table CCWE in 268.41	Toulene	108-88-3	0.080	(2)	0.034	(1)
			Acetophenone	96-86-2	0.010		19	(1)
			Diphenylamine	22-39-4	0.52	(2)	NA	
			Diphenylnitrosamine	86-30-6	0.40	(2)	NA	
			Sum of Diphenylamine and Diphenylnitrosamine.		NA		13	(1)
			Phenol	108-95-2	0.039		12	(1)
			Chromium (Total)	7440-47-32	0.35		NA	
			Nickel	7440-02-0	0.47		NA	
K023	NA	NA	Phthalic anhydride (measured as Phthalic acid).	85-44-9	0.54	(1)	28	(1)
K024	NA	NA	Phthalic anhydride (measured as Phthalic acid).	85-44-9	0.54	(1)	28	(1)
K026	NA	Table CCWE in 268.41	1,1-Dichloroethane	75-34-3	0.007	(1)	6.0	(1)
			trans-1,2-Dichloroethane.		0.033	(1)	6.0	(1)
			Hexachlorobutadiene	87-68-3	0.007	(1)	5.6	(1)
			Hexachloroethane	67-72-1	0.033	(1)	28	(1)
			Pentachloroethane	76-01-7	0.033	(1)	5.6	(1)

268.43 TABLE CCW.—CONSTITUENT CONCENTRATIONS IN WASTES—Continued

Waste code	Commercial chemical name	See also	Regulated hazardous constituent	CAS number for regulated hazardous constituent	Wastewaters		Nonwastewaters	
					Concentration (mg/l)	Notes	Concentration (mg/kg)	Notes
			1,1,1,2-Tetrachloroethane.	630-20-6	0.007	(1)	5.6	(1)
			1,1,2,2-Tetrachloroethane.	79-34-6	0.007	(1)	5.6	(1)
			1,1,1-Trichloroethane	71-55-6	0.007	(1)	6.0	(1)
			1,1,2-Trichloroethane	79-00-5	0.007	(1)	6.0	(1)
			Tetrachloroethylene	127-18-4	0.007	(1)	6.0	(1)
			Cadmium	7440-43-9	6.4		NA	
			Chromium (Total)	7440-47-32	0.35		NA	
			Lead	7439-92-1	0.037		NA	
			Nickel	7440-02-0	0.47		NA	
K029	NA	NA	Chloroform	67-66-3	0.048		6.0	(1)
			1,2-Dichloroethane	107-06-2	0.21		6.0	(1)
			1,1-Dichloroethylene	75-35-4	0.025		6.0	(1)
			1,1,1-Trichloroethane	71-55-6	0.054		6.0	(1)
			Vinyl chloride	75-01-4	0.27		6.0	(1)
K030	NA	NA	o-Dichlorobenzene	95-50-1	0.008	(1)	NA	
			p-Dichlorobenzene	106-46-7	0.008	(1)	NA	
			Hexachlorobutadiene	87-68-3	0.007	(1)	5.6	(1)
			Hexachloroethane	67-72-1	0.033	(1)	28	(1)
			Hexachloropropene	1888-71-7	NA		19	(1)
			Pentachlorobenzene	608-93-5	NA		28	(1)
			Pentachloroethane	76-01-7	0.007	(1)	5.6	(1)
			1,2,4,5-Tetrachlorobenzene.	95-94-3	0.017	(1)	14	(1)
			Tetrachloroethene	127-18-4	0.007	(1)	6.0	(1)
			1,2,4-Trichlorobenzene	120-82-1	0.023	(1)	19	(1)
K031	NA	Table CCWE in 268.41	Arsenic	7440-38-2	0.79		NA	(1)
K032	NA	NA	Hexachlorocyclopentadiene	77-47-4	0.057	(2)	2.4	(1)
			Chlordane	57-74-9	0.0033	(2)	0.26	(1)
			Heptachlor	76-44-8	0.0012	(2)	0.066	(1)
			Heptachlor epoxide	1024-57-3	0.016	(2)	0.066	(1)
K033	NA	NA	Hexachlorocyclopentadiene.	77-47-4	0.057	(2)	2.4	(1)
K034	NA	NA	Hexachlorocyclopentadiene.	77-47-4	0.057	(2)	2.4	(1)
K035	NA	NA	Acenaphthene	83-32-9	NA		3.4	(1)
			Anthracene	120-12-7	NA		3.4	(1)
			Benz(a)anthracene	56-55-3	0.059	(2)	3.4	(1)
			Benzo(a)pyrene	50-32-8	NA		3.4	(1)
			Chrysene	218-01-9	0.059	(2)	3.4	(1)
			Dibenz(a,h)anthra-cene	53-70-3	NA		3.4	(1)
			Fluoranthene	206-44-0	0.068	(2)	3.4	(1)
			Fluorene	86-73-7	NA		3.4	(1)
			Indeno(1,2,3-cd)pyrene	193-39-5	NA		3.4	(1)
			Cresols (m- and p-isomers).		0.77	(2)	NA	
			Naphthalene	91-20-3	0.059	(2)	3.4	(1)
			o-cresol	95-48-7	0.11	(2)	NA	
			Phenanthrene	85-01-8	0.059	(2)	3.4	(1)
			Phenol	108-95-2	0.039		NA	
			Pyrene	129-00-0	0.067	(2)	8-2	(1)
K036	NA	NA	Disulfoton	298-04-4	0.025	(2)	0.1	(1)
K037	NA	NA	Disulfoton	298-04-4	0.025	(2)	0.1	(1)
			Toluene	108-88-3	0.080	(2)	28	(1)
K038	NA	NA	Phorate	298-02-2	0.025	(2)	0.1	(1)
K040	NA	NA	Phorate	298-02-2	0.025	(2)	0.1	(1)
K041	NA	NA	Toxaphene	8001-35-1	0.0095	(2)	2.6	(1)
K042	NA	NA	1,2,4,5-Tetrachlorobenzene.	95-94-3	0.055	(2)	4.4	(1)
			o-Dichlorobenzene	95-50-1	0.088	(2)	4.4	(1)
			p-Dichlorobenzene	106-46-7	0.090	(2)	4.4	(1)
			Pentachlorobenzene	608-93-5	0.055	(2)	4.4	(1)
			1,2,4-Trichlorobenzene	120-82-1	0.055	(2)	4.4	(1)
K043	NA	NA	2,4-Dichlorophenol	120-83-2	0.049	(1)	0.38	(1)
			2,6-Dichlorophenol	87-65-0	0.013	(1)	0.34	(1)
			2,4,5-Trichlorophenol	95-95-4	0.016	(1)	8.2	(1)
			2,4,6-Trichlorophenol	88-06-2	0.039	(1)	7.6	(1)
			Tetrachlorophe- nols (Total).		0.018	(1)	0.68	(1)
			Pentachlorophenol	87-86-5	0.022	(1)	1.9	(1)
			Tetrachloroethene	79-01-6	0.006	(1)	1.7	(1)
			Hexachlorodibenzo-p-dioxins.		0.001	(1)	0.001	(1)
			Hexachlorodibenzo-furans.		0.001	(1)	0.001	(1)
			Pentachlorodibenzo-p-dioxins.		0.001	(1)	0.001	(1)
			Pentachlorodibenzo-furans.		0.001	(1)	0.001	(1)
			Tetrachlorodibenzo-p-dioxins.		0.001	(1)	0.001	(1)
			Tetrachlorodibenzo-furans.		0.001	(1)	0.001	(1)
K046	NA	Table CCWE in 268.41	Lead	7439-92-1	0.037		NA	

268.43 TABLE CCW.—CONSTITUENT CONCENTRATIONS IN WASTES—Continued

Waste code	Commercial chemical name	See also	Regulated hazardous constituent	CAS number for regulated hazardous constituent	Wastewaters		Nonwastewaters	
					Concentration (mg/l)	Notes	Concentration (mg/kg)	Notes
K048	NA	Table CCWE in 268.41	Benzene	71-43-2	0.011	(1)	14	(1)
			Benzo(a)pyrene	50-32-8	0.047	(1)	12	(1)
			Bis(2-ethylhexyl) phthalate.	117-81-7	0.043	(1)	7.3	(1)
			Chrysene	218-01-9	0.043	(1)	15	(1)
			Di-n-butyl phthalate	84-74-2	0.06	(1)	3.6	(1)
			Ethylbenzene					
			Fluorene	100-41-4	0.011	(1)	14	(1)
			Naphthalene	86-73-7	0.005	(1)	NA	
			Phenanthrene	91-20-3	0.033	(1)	42	(1)
			Phenol	85-01-8	0.039	(1)	34	(1)
			Pyrene	108-95-2	0.047	(1)	3.6	(1)
			Toluene	129-00-0	0.045	(1)	36	(1)
			Xylene(s)	108-88-3	0.011	(1)	14	(1)
			Cyanides (Total)		0.011	(1)	22	(1)
			Chromium (Total)	57-12-5	0.028	(1)	1.8	(1)
			Lead	7440-47-32	0.2		NA	
				7439-92-1	0.037		NA	
K049	NA	Table CCWE in 268.41	Anthracene	120-12-7	0.039	(1)	28	(1)
			Benzene	71-43-2	0.011	(1)	14	(1)
			Benzo(a)pyrene	50-32-8	0.047	(1)	12	(1)
			Bis(2-ethylhexyl) phthalate.	117-81-7	0.043	(1)	7.3	(1)
			Carbon disulfide	75-15-0	0.011	(1)	NA	
			Chrysene	2218-01-9	0.043	(1)	15	(1)
			2,4-Dimethylphenol	105-67-9	0.033	(1)	NA	
			Ethylbenzene					
			Naphthalene	100-41-4	0.011	(1)	14	(1)
			Phenanthrene	91-20-3	0.033	(1)	42	(1)
			Phenol	85-01-8	0.039	(1)	34	(1)
			Pyrene	108-95-2	0.047	(1)	3.6	(1)
			Toluene	129-00-0	0.045	(1)	36	(1)
			Xylene(s)	108-88-3	0.011	(1)	14	(1)
			Cyanides (Total)		0.011	(1)	22	(1)
			Chromium (Total)	57-12-5	0.028	(1)	1.8	(1)
			Lead	7440-47-32	0.2		NA	
				7439-92-1	0.037		NA	
K050	NA	Table CCWE in 268.41	Benzo(a)pyrene	50-32-8	0.047	(1)	12	(1)
			Phenol	108-95-2	0.047	(1)	3.6	(1)
			Cyanides (Total)	57-12-5	0.028	(1)	1.8	(1)
			Chromium (Total)	7440-47-32	0.2		NA	
			Lead	7439-92-1	0.037		NA	
K051	NA	Table CCWE in 268.41	Acenaphtene	208-96-8	0.05	(1)	NA	
			Anthracene	120-12-7	0.039	(1)	28	(1)
			Benzene	71-43-2	0.011	(1)	14	(1)
			Benzo(a)- anthracene	50-32-8	0.043	(1)	20	(1)
			Benzo(a)pyrene					
			Bis(2-ethylhexyl) phthalate.	117-81-7	0.047	(1)	12	(1)
			Chrysene	75-15-0	0.043	(1)	7.3	(1)
			Di-n-butyl phthalate	2218-01-09				
			Ethylbenzene	105-67-9	0.043	(1)	15	(1)
			Fluorence		0.06	(1)	3.6	(1)
			Naphthalene	100-41-4				
			Phenanthrene	86-73-7	0.011	(1)	14	(1)
			Phenol	91-20-3	0.05	(1)	NA	
			Pyrene	85-01-8	0.033	(1)	42	(1)
			Toluene	108-95-2	0.039	(1)	34	(1)
			Xylene(s)	129-00-0	0.047	(1)	3.6	(1)
			Cyanides (Total)	108-88-3	0.045	(1)	36	(1)
			Chromium (Total)		0.011	(1)	14	(1)
			Lead	57-12-5	0.011	(1)	22	(1)
				7440-47-32	0.028	(1)	1.8	(1)
				7439-92-1	0.2		NA	
					0.037		NA	
K052	NA	Table CCWE in 268.41	Benzene	71-43-2	0.011	(1)	14	(1)
			Benzo(a)pyrene	50-32-8	0.047	(1)	12	(1)
			o-Cresol	95-48-7	0.011	(1)	6.2	(1)
			p-Cresol	106-44-5	0.011	(1)	6.2	(1)
			2,4-Dimethylphenol	105-67-9	0.033	(1)	NA	
			Ethylbenzene					
			Naphthalene	100-41-4	0.011	(1)	14	(1)
			Phenanthrene	91-20-3	0.033	(1)	42	(1)
			Phenol	85-01-8	0.039	(1)	34	(1)
			Toluene	108-95-2	0.047	(1)	3.6	(1)
			Xylenes	108-88-3	0.011	(1)	14	(1)
			Cyanides (Total)		0.011	(1)	22	(1)
			Chromium (Total)	57-12-5	0.028	(1)	1.8	(1)
			Lead	7440-47-32	0.2		NA	
				7439-92-1	0.037		NA	
K060	NA	NA	Benzene	71-43-2	0.17	(1,2)	0.071	(1)
			Benzo(a)pyrene	50-32-8	0.035	(1,2)	3.6	(1)
			Naphthalene	91-20-3	0.028	(1,2)	3.4	(1)
			Phenol	108-95-2	0.042	(1,2)	3.4	(1)
			Cyanides (Total)	57-12-5	1.9		1.2	
K061	NA	Table CCWE in 268.41	Cadmium	7440-43-9	1.61		NA	
			Chromium (Total)	7440-47-32	0.32		NA	
			Lead	7439-92-1	0.51		NA	
			Nickel	7440-02-0	0.44		NA	

268.43 TABLE CCW.—CONSTITUENT CONCENTRATIONS IN WASTES—Continued

Waste code	Commercial chemical name	See also	Regulated hazardous constituent	CAS number for regulated hazardous constituent	Wastewaters		Nonwastewaters	
					Concentration (mg/l)	Notes	Concentration (mg/kg)	Notes
K062	NA	Table CCWE in 268.41	Chromium (Total)	7440-47-32	0.32		NA	
			Lead	7439-92-1	0.04		NA	
			Nickel	7440-02-0	0.44		NA	
K069	NA	Table CCWE in 268.41 and Table 2 in 268.42.	Cadmium	7440-43-9	1.6		NA	
			Lead	7439-92-1	0.51		NA	
K071	NA	Table CCWE in 268.41	Mercury	7439-97-6	0.030		NA	
K073	NA	NA	Carbon tetrachloride	56-23-5	0.057	(3)	6.2	(1)
			Chloroform	67-66-3	0.046	(3)	6.2	(1)
			Hexachloroethane	67-72-1	0.055	(3)	30	(1)
			Tetrachloroethane	127-18-4	0.056	(3)	6.2	(1)
			1,1,1-Trichloroethane	71-55-6	0.054	(3)	6.2	(1)
K083	NA	Table CCWE in 268.41	Benzene	71-43-2	0.14	(3)	6.6	(1)
			Aniline	62-53-3	0.81		14	(1)
			Diphenylamine	22-39-4	0.52	(3)	NA	
			Diphenylnitrosamine	86-30-6	0.40	(3)	NA	
			Sum of Diphenylamine and Diphenylnitrosamine.		NA		14	(1)
			Nitrobenzene					
			Phenol					
			Cyclohexanone					
			Nickel	98-95-3	0.068	(3)	14	(1)
				108-95-2	0.039		5.6	(1)
				108-94-1	0.36		NA	
				7440-02-0	0.47		NA	
K084	NA	NA	Arsenic	7440-38-2	0.79		NA	
K085	NA	NA	Benzene	71-43-2	0.14	(3)	4.4	(1)
			Chlorobenzene	108-90-7	0.057	(3)	4.4	(1)
			o-Dichlorobenzene	95-50-1	0.088	(3)	4.4	(1)
			m-Dichlorobenzene	541-73-1	0.036	(3)	4.4	(1)
			p-Dichlorobenzene	106-46-7	0.090	(3)	4.4	(1)
			1,2,4-Trichlorobenzene	120-82-1	0.055	(3)	4.4	(1)
			1,2,4,5-Tetrachlorobenzene.	95-94-3	0.055	(3)	4.4	(1)
			Pentachlorobenzene	608-93-5	0.055	(3)	4.4	(1)
			Hexachlorobenzene	118-74-1	0.055	(3)	4.4	(1)
			Aroclor 1016	12674-11-2	0.013	(3)	0.92	(1)
			Aroclor 1221	11104-28-2	0.014	(3)	0.92	(1)
			Aroclor 1232	11141-16-5	0.013	(3)	0.92	(1)
			Aroclor 1242	53469-21-9	0.017	(3)	0.92	(1)
			Aroctor 1248	12672-29-6	0.013	(3)	0.92	(1)
			Aroclor 1254	11097-69-1	0.014	(3)	1.8	(1)
			Aroclor 1260	11096-82-5	0.014	(3)	1.8	(1)
			Acetone	67-64-1	0.28		160	(1)
K086	NA	Table CCWE in 268.41	Acetophenone	98-86-2	0.010		9.7	(1)
			117-81-7	0.28	(3)	28	(1)
	Bis(2-ethylhexyl) phthalate		71-36-3	5.6		2.6	(1)
	n-Butyl alcohol		85-68-7	0.017	(3)	7.9		
	Butylbenzylphthalate		108-94-1	0.36		NA	(1)
	Cyclohexanone		95-50-1	0.088		6.2	(1)
	1,2-Dichlorobenzene		84-66-2	0.20	(3)	28	(1)
	Diethyl phthalate		131-11-3	0.047	(3)	28	(1)
	Dimethyl phthalate		84-74-2	0.057	(3)	28	(1)
	Di-n-butyl phthalate		117-84-0	0.017	(3)	28	(1)
	Di-n-octyl phthalate		141-78-6	0.34	(3)	33	(1)
	Ethyl acetate		100-41-4	0.057	(3)	6.0	
	Ethylbenzene		67-56-1	5.6	(3)	NA	(1)
	Methanol		108-10-1	0.14		33	(1)
	Methyl isobutyl ketone		78-93-3	0.28		36	(1)
	Methyl ethyl ketone		75-09-2	0.089	(3)	33	(1)
	Methylene chloride		91-20-3	0.059	(3)	3.1	(1)
	Naphthalene		98-95-3	0.066	(3)	14	(1)
	Nitrobenzene		108-88-3	0.080	(3)	28	(1)
	Toluene		71-55-6	0.054	(3)	5.6	(1)
	1,1,1-Trichloroethane		79-01-6	0.054	(3)	5.6	(1)
	Trichloroethylene			0.32	(3)	28	(1)
	Xylenes (Total)		57-12-5	1.9		1.5	
	Cyanides (Total)		7440-47-32	0.32		NA	
	Chromium (Total)		7439-92-1	0.037		NA	
	Lead		Acenaphthalene	208-96-8	0.028	(1)	3.4	(1)
K087	NA	Table CCWE in 268.41	Benzene	71-43-2	0.014	(1)	0.071	(1)
			Chrysene	218-01-9	0.028	(1)	3.4	(1)
			Fluoranthene	206-44-0	0.028	(1)	3.4	(1)
			Indeno(1,2,3-cd)pyrene	193-39-5	0.028	(1)	3.4	(1)
			Naphthalene	91-20-3	0.028	(1)	3.4	(1)
			Phenanthrene	85-01-8	0.028	(1)	0.55	(1)
			Toluene	108-88-3	0.008	(1)	0.07	(1)
			Xylenes		0.014	(1)	NA	
			Lead	7439-92-1	0.037		28	(1)
K093	NA	NA	Phthalic anhydride (measured as Phthalic acid).	85-44-9	0.54	(1)	28	(1)
K094	NA	NA	Phthalic anhydride (measured as Phthalic acid).	85-44-9	0.54	(1)	5.6	(1)
K095	NA	NA	1,1,1,2-Tetrachloroethane.	630-20-6	0.057		5.6	(1)
			1,1,2,2-Tetrachloroethane.	79-34-5	0.057			

268.43 TABLE CCW.—CONSTITUENT CONCENTRATIONS IN WASTES—Continued

Waste code	Commercial chemical name	See also	Regulated hazardous constituent	CAS number for regulated hazardous constituent	Wastewaters		Nonwastewaters	
					Concentration (mg/l)	Notes	Concentration (mg/kg)	Notes
			Tetrachloroethene	127-18-4	0.056		6.0	(1)
			1,1,2-Trichloroethane	79-00-5	0.054		6.0	(1)
			Trichloroethylene	79-01-6	0.054		5.6	(1)
			Hexachloroethane	67-72-1	0.055		28	(1)
			Pentachloroethane	76-01-7	0.055		5.6	(1)
K096	NA	NA	1,1,1,2-Tetrachloroethane.	630-20-6	0.057		5.6	(1)
			1,1,2,2-Tetrachloroethane.	79-34-6	0.057		5.6	(1)
			Tetrachloroethene	127-18-4	0.056		6.0	(1)
			1,1,2-Trichloroethane	79-00-5	0.054		6.0	(1)
			Trichloroethene	79-01-6	0.054		5.6	(1)
			Trichloroethylene	79-01-6	0.054		5.6	(1)
			1,3-Dichlorobenzene	541-73-1	0.036		5.6	(1)
			Pentachloroethane	76-01-7	0.055		5.6	(1)
K097	NA	NA	1,2,4-Trichlorobenzene	120-82-1	0.055		19	(1)
			Hexachlorocyclopentadiene.	77-47-4	0.057	(2)	2.4	(1)
			Chlordane	57-74-9	0.0033	(2)	0.26	(1)
			Heptachlor	76-44-8	0.0012	(2)	0.066	(1)
			Heptachlor epoxide	1024-57-3	0.016	(2)	0.066	(1)
K098	NA	NA	Toxaphene	8001-35-1	0.0095	(2)	2.6	(1)
K099	NA	NA	2,4-Dichlorophenoxyacetic acid.	94-75-7	1.0	(1)	1.0	(1)
			Hexachlorodibenzo-p-dioxins.		0.001	(1)	0.001	(1)
			Hexachlorodibenzofurans.		0.001	(1)	0.001	(1)
			Pentachlorodibenzo-p-dioxins.		0.001	(1)	0.001	(1)
			Pentachlorodibenzofurans.		0.001	(1)	0.001	(1)
			Tetrachlorodibenzo-p-dioxins.		0.001	(1)	0.001	(1)
			Tetrachlorodibenzofurans.		0.001	(1)	0.001	(1)
K100	NA	Table CCWE in 268.41	Cadmium	7440-43-9	1.6		NA	
			Chromium (Total)	7440-47-32	0.32		NA	
			Lead	7439-92-1	0.51		NA	
K101	NA	NA	o-Nitroaniline		0.27	(1)	14	(1)
			Arsenic	7440-38-2	0.79		NA	
			Cadmium	7440-43-9	0.24		NA	
			Lead	7439-92-1	0.17		NA	
			Mercury	7439-97-6	0.062		NA	
K102	NA	Table CCWE in 268.41	o-Nitrophenol		0.028	(1)	13	(1)
			Arsenic	7440-38-2	0.79		NA	
			Cadmium	7440-43-9	0.24		NA	
			Lead	7439-92-1	0.17		NA	
			Mercury	7439-97-6	0.062		NA	
			Aniline	62-53-3	4.5		5.6	(1)
			Benzene	71-43-2	0.15		6.0	(1)
			2,4-Dinitrophenol	51-28-5	0.61		5.6	(1)
			Nitrobenzene	98-95-3	0.073		5.6	(1)
			Phenol	108-95-2	1.4		5.6	(1)
K103	NA	NA	Aniline	62-53-3	4.5		5.6	(1)
			Benzene	71-43-2	0.15		6.0	(1)
			2,4-Dinitrophenol	51-28-5	0.61		5.6	(1)
			Nitrobenzene	98-95-3	0.073		5.6	(1)
			Phenol	108-95-2	1.4		5.6	(1)
			Cyanides (Total)	57-12-5	2.7		1.8	(1)
			Benzene	71-43-2	0.14		4.4	(1)
			Chlorobenzene	108-90-7	0.057		4.4	(1)
			o-Dichlorobenzene	95-50-1	0.088		4.4	(1)
			p-Dichlorobenzene	106-46-7	0.090		4.4	(1)
			2,4,5-Trichlorophenol	95-95-4	0.18		4.4	(1)
			2,4,6-Trichlorophenol	88-06-2	0.035		4.4	(1)
			2-Chlorophenol	95-57-8	0.044		4.4	(1)
			Phenol	108-95-2	0.039		4.4	(1)
K104	NA	NA	Mercury	7439-97-6	0.030		NA	
K105	NA	NA						
K106	NA	Table CCWE in 268.41 and Table 2 in 268.42.						
K115	NA	Table CCWE in 268.41	Nickel	7440-02-0	0.47		NA	
P004	Aldrin	NA	Aldrin	309-00-2	0.021	(2)	0.066	(1)
P010	Arsenic acid	Table CCWE in 268.41	Arsenic	7440-38-2	0.79		NA	
P011	Arsenic pentoxide	Table CCWE in 268.41	Arsenic	7440-38-2	0.79		NA	
P012	Arsenic trioxide	Table CCWE in 268.41	Arsenic	7440-38-2	0.79		NA	
P013	Barium cyanide	Table CCWE in 268.41	Cyanides (Total)	57-12-5	1.9		110	
			Cyanides (Amenable)	57-12-5	0.1		9.1	
P020	2-sec-Butyl-4,6-dinitrophenol (Dinoseb).	NA	2-sec-Butyl-4,6-dinitrophenol (Dinoseb).	88-85-7	0.066		2.5	(1)
P021	Calcium cyanide	NA	Cyanides (Total)	57-12-5	1.9		110	
			Cyanides (Amenable)	57-12-5	0.1		9.1	
P022	Carbon disulfide	Table 2 in 268.42	Carbon disulfide	75-15-0	0.014		NA	
P024	p-Chloroaniline	NA	p-Chloroaniline	106-47-8	0.46		16	(1)
P029	Copper cyanide	NA	Cyanides (Total)	57-12-5	1.9		110	
			Cyanides (Amenable)	57-12-5	0.1		9.1	
P030	Cyanides (soluble salts and complexes.	NA	Cyanides (Total)	57-12-5	1.9		110	
			Cyanides (Amenable)	57-12-5	0.1		9.1	
P036	Dichlorophenylarsine	Table CCWE in 268.41	Arsenic	7440-38-2	0.79		NA	
P037	Dieldrin	NA	Dieldrin	60-57-1	0.017	(2)	0.13	(1)

268.43 TABLE CCW.—CONSTITUENT CONCENTRATIONS IN WASTES—Continued

Waste code	Commercial chemical name	See also	Regulated hazardous constituent	CAS number for regulated hazardous constituent	Wastewaters		Nonwastewaters	
					Concentration (mg/l)	Notes	Concentration (mg/kg)	Notes
P038	Diethylarsine	Table CCWE in 268.41	Arsenic	7440-38-2	0.79		NA	
P039	Disulfoton	NA	Disulfoton	298-04-4	0.017		0.1	(1)
P047	4,6-Dinitro-o-cresol	NA	4,6-Dinitro-o-cresol	534-52-1	0.28	(2)	160	(1)
P048	2,4-Dinitrophenol	NA	2,4-Dinitrophenol	51-28-5	0.12	(2)	160	(1)
P050	Endosulfan	NA	Endosulfan I	939-98-8	0.023	(2)	0.066	(1)
			Endosulfan II	33213-6-5	0.029	(2)	0.13	(1)
			Endosulfan sulfate	1031-07-8	0.029	(2)	0.13	(1)
P051	Endrin	NA	Endrin	72-20-8	0.0028	(2)	0.13	(1)
			Endrin aldehyde	7421-93-4	0.025	(2)	0.13	(1)
P056	Fluoride	Table 2 in 268.42	Fluoride	16964-48-8	35		NA	
P059	Heptachlor	NA	Heptachlor	76-44-8	0.0012	(2)	0.066	(1)
			Heptachlor epoxide	1024-57-3	0.016	(2)	0.066	(1)
P060	Isodrin	NA	Isodrin	465-73-6	0.021	(2)	0.066	(1)
P063	Hydrogen cyanide	NA	Cyanides (Total)	57-12-5	1.9		110	
			Cyanides (Amenable)	57-12-5	0.10		9.1	
P065	Mercury fulminate	Table CCWE in 268.41 and Table 2 in 268.42.	Mercury	7439-97-6	0.030		NA	
P071	Methyl parathion	NA	Methyl parathion	298-00-0	0.025		0.1	(1)
P073	Nickel carbonyl	Table CCWE in 268.41	Nickel	7440-02-0	0.32		NA	
P074	Nickel cyanide	Table CCWE in 268.41	Cyanides (Total)	57-12-5	1.9		110	
			Cyanides (Amenable)	57-12-5	0.10		9.1	
			Nickel	7440-02-0	0.44		NA	
P077	p-Nitroaniline	NA	p-Nitroaniline	100-01-6	0.028	(2)	28	(1)
P082	N-Nitrosodimethylamine.	Table 2 in 268.42	N-Nitrosodimethylamine.	62-75-9	0.40	(2)	NA	
P089	Parathion	NA	Parathion	56-38-2	0.025		0.1	(1)
P092	Phenylmercury acetate	Table CCWE in 268.41 and Table 2 in 268.42.	Mercury	7439-97-6	0.030		NA	
P094	Phorate	NA	Phorate	298-02-2	0.025		0.1	(1)
P097	Famphur	NA	Famphur	52-85-7	0.025		0.1	(1)
P098	Potassium cyanide	NA	Cyanides (Total)	57-12-5	1.9		110	
			Cyanides (Amenable)	57-12-5	0.10		9.1	
P099	Potassium silver cyanide.	Table CCWE in 268.41	Cyanides (Total)	57-12-5	1.9		110	
			Cyanides (Amenable)	57-12-5	0.1		9.1	
			Silver	7440-22-4	0.29		NA	
P101	Ethyl cyanide (Propanenitrile).	NA	Ethyl cyanide (Propanenitrile).	107-12-0	0.24	(2)	360	(1)
P103	Selenourea	Table CCWE in 268.41	Selenium	7782-49-2	1.0	(2)	NA	
P104	Silver cyanide	Table CCWE in 268.41	Cyanides (Total)	57-12-5	1.9		110	
			Cyanides (Amenable)	57-12-5	0.10		9.1	
			Silver	7440-22-4	0.29		NA	
P106	Sodium cyanide	NA	Cyanides (Total)	57-12-5	1.9		110	
			Cyanides (Amenable)	57-12-5	0.10		9.1	
P110	Tetraethyl lead	Table CCWE in 268.41 and Table 2 in 268.42.	Lead	7439-92-1	0.040		NA	
P113	Thallic oxide	Table 2 in 268.42	Thallium	7440-28-0	0.14	(2)	NA	
P114	Thallium selenite	Table CCWE in 268.41	Selenium	7782-49-2	1.0		NA	
P115	Thallium(I)sulfate	Table 2 in 268.42	Thallium	7440-28-0	0.14	(2)	NA	
P119	Ammonia vanadate	Table 2 in 268.42	Vanadium	7440-62-2	28	(2)	NA	
P120	Vanadium pentoxide	Table 2 in 268.42	Vanadium	7440-62-2	28	(2)	NA	
P121	Zinc cyanide	NA	Cyanides Total)	57-12-5	1.9		110	
			Cyanides (Amenable)	57-12-5	0.10		9.1	
P123	Toxaphene	NA	Toxaphene	8001-35-1	0.0095	(2)	1.3	(1)
U002	Acetone	NA	Acetone	67-64-1	0.28		160	(1)
U003	Acetonitrile	Table 2 in 268.42	Acetonitrile	75-05-8	0.17		0.17	
U004	Acetophenone	NA	Acetophenone	98-86-2	0.010	(1)	9.7	(1)
U005	2-Acetylaminofluorene	NA	2-Acetylaminofluorene	53-96-3	0.059	(2)	140	(1)
U009	Acrylonitrile	NA	Acrylonitrile	107-13-1	0.24	(2)	84	(1)
U012	Aniline	NA	Aniline	62-53-3	0.81		14	(1)
U018	Benz(a)anthracene	NA	Benz(a)anthracene	56-55-3	0.059	(2)	8.2	(1)
U019	Benzene	NA	Benzene	71-43-2	0.14	(2)	36	(1)
U022	Benzo(a)pyrene	NA	Benzo(a)pyrene	50-32-8	0.061	(2)	8.2	(1)
U024	Bis(2-chloroethoxy) methane.	NA	Bis(2-chloroethoxy) methane.	111-91-1	0.036		7.2	(1)
U025	Bis(2-chloroethyl) ether	NA	Bis(2-chloroethyl) ether	111-44-4	0.033		7.2	(1)
U027	Bis(2-chloroisopropyl) ether.	NA	Bis(2-chloroisopropyl) ether.	39638-32-9	0.055	(2)	7.2	(1)
U028	Bis(2-ethylhexyl) phthalate.	NA	Bis(2-ethylhexyl) phthalate.	117-81-7	0.54	(1)	28	(1)
U029	Bromomethane (Methyl bromide).	NA	Bromomethane (Methyl bromide).	74-83-9	0.11	(1)	15	(1)
U030	4-Bromophenyl phenyl ether.	NA	4-Bromophenyl phenyl ether.	101-55-3	0.055	(1)	15	(1)
U031	n-Butyl alcohol	NA	n-Butyl alcohol	71-36-3	5.6		2.6	(1)
U032	Calcium chromate	Table CCWE in 268.41	Chromium (Total)	7440-47-32	0.32		NA	
U036	Chlordane (alpha and gamma).	NA	Chlordane (alpha and gamma).	57-74-9	0.0033	(2)	0.13	(1)
U037	Chlorobenzene	NA	Chlorobenzene	108-90-7	0.057	(2)	5.7	(1)
U038	Chlorobenzilate	Table 2 in 268.42	Chlorobenzilate	510-15-6	0.10	(2)	NA	
U039	p-Chloro-m-cresol	NA	p-Chloro-m-cresol	59-50-7	0.018	(2)	14	(1)
U042	2-Chloroethyl vinyl	Table 2 in 268.42	2-Chloroethyl vinyl	110-75-8	0.057		NA	
U043	Vinyl chloride	NA	Vinyl chloride	75-01-4	0.27	(2)	33	(1)
U044	Chloroform	NA	Chloroform	67-66-3	0.046	(2)	5.6	(1)
U045	Chloromethane (Methyl chloride).	NA	Chloromethane (Methyl chloride).	74-87-3	0.19	(2)	33	(1)
U047	2-Chloro- naphthalene	NA	2-Chloro- naphthalene	91-58-7	0.055	(2)	5.6	(1)

268.43 TABLE CCW.—CONSTITUENT CONCENTRATIONS IN WASTES—Continued

Waste code	Commercial chemical name	See also	Regulated hazardous constituent	CAS number for regulated hazardous constituent	Wastewaters		Nonwastewaters	
					Concentration (mg/l)	Notes	Concentration (mg/kg)	Notes
U048	2-Chlorophenol	NA	2-Chlorophenol	95-57-8	0.044	(3)	5.7	(1)
U050	Chrysene	NA	Chrysene	218-01-9	0.059	(3)	8.2	(1)
U051	Creosote	Table CCWE in 268.41	Naphthalene	91-20-3	0.031		1.5	(1)
			Pentachlorophenol	87-86-5	0.18		7.4	(1)
			Phenanthrene					
			Pyrene	85-01-8	0.031		1.5	(1)
			Toluene	129-00-0	0.028		1.5	(1)
			Xylenes (Total)	106-88-3	0.028		28	(1)
			Lead		0.032		33	(1)
				7439-92-1	0.037		NA	
U052	Cresols (Cresylic acid)	NA	o-Cresol	95-48-7	0.11	(3)	5.6	(1)
			Cresols (m- and p-isomers).		0.77	(3)	3.2	(1)
U057	Cyclohexanone	Table 2 in 268.42	Cyclohexanone	108-94-1	0.36		NA	
U060	DDD	NA	o,p'-DDD	53-19-0	0.023		0.087	(1)
			p,p'-DDD	72-54-8	0.023		0.087	(1)
U061	DDT	NA	o,p'-DDT	789-02-6	0.0039	(3)	0.087	(1)
			p,p'-DDT	50-29-3	0.0039	(3)	0.087	(1)
			o,p'-DDD	53-19-0	0.023	(3)	0.087	(1)
			p,p'-DDD	72-54-8	0.023	(3)	0.087	(1)
			o,p'-DDE	3424-82-6	0.031	(3)	0.087	(1)
			p,p'-DDE	72-55-9	0.031	(3)	0.087	(1)
U063	Dibenzo(a,h) anthracene.	NA	Dibenzo(a,h) anthracene.	53-70-3	0.055	(3)	8.2	(1)
U066	1,2-Dibromo-3-chloropropane.	NA	1,2-Dibromo-3-chloropropane.	96-12-8	0.11	(3)	15	(1)
U067	1,2-Dibromo ethane (Ethylene dibromide).	NA	1,2-Dibromo-ethane (Ethylene dibromide).	106-93-4	0.028	(3)	15	(1)
U068	Dibromomethane	NA	Dibromomethane	74-95-3	0.11	(3)	15	(1)
U069	Di-n-butyl phthalate	NA	Di-n-butyl phthalate	84-74-2	0.54	(1)	28	(1)
U070	o-Dichlorobenzene	NA	o-Dichlorobenzene	95-50-1	0.088	(3)	6.2	(1)
U071	m-Dichlorobenzene	NA	m-Dichlorobenzene	541-73-1	0.036		6.2	(1)
U072	p-Dichlorobenzene	NA	p-Dichlorobenzene	104-46-7	0.090	(3)	6.2	(1)
U075	Dichlorodifluoromethane.	NA	Dichlorodifluoromethane.	75-71-8	0.23	(3)	7.2	(1)
U076	1,1-Dichloroethane	NA	1,1-Dichloroethane	75-34-3	0.059	(3)	7.2	(1)
U077	1,2-Dichloroethane	NA	1,2-Dichloroethane	107-06-2	0.21	(3)	7.2	(1)
U078	1,1-Dichloroethylene	NA	1,1-Dichloroethylene	75-35-4	0.025	(3)	33	(1)
U079	1,2-Dichloroethylene	NA	trans-1,2-Dichloroethylene.	156-60-5	0.054	(3)	33	(1)
U080	Methylene chloride	NA	Methylene chloride	75-09-2	0.089	(3)	33	(1)
U081	2,4-Dichlorophenol	NA	2,4-Dichlorophenol	120-83-2	0.044	(3)	14	(1)
U082	2,6-Dichlorophenol	NA	2,6-Dichlorophenol	87-65-0	0.044	(3)	14	(1)
U083	1,2-Dichloropropane	NA	1,2-Dichloropropane	78-87-5	0.85	(3)	18	(1)
U084	1,3-Dichloropropene	NA	cis-1,3-Dichloropropylene.	10061-01-5	0.036	(3)	18	(1)
			trans-1,3-Dichloropropylene.	10061-02-6	0.036	(3)	18	(1)
U088	Diethyl phthalate	NA	Diethyl phthalate	84-66-2	0.54	(3)	28	(1)
U093	p-Dimethylaminoazobenzene.	Table 2 in 268.42	p-Dimethylaminoazobenzene.	60-11-7	0.13	(3)	NA	
U101	2,4-Dimethylphenol	NA	2,4-Dimethylphenol	105-67-9	0.036	(3)	14	(1)
U102	Dimethyl phthalate	NA	Dimethyl phthalate	131-11-3	0.54	(1)	28	(1)
U105	2,4-Dinitrotoluene	NA	2,4-Dinitrotoluene	121-14-2	0.32	(3)	140	(1)
U106	2,6-Dinitrotoluene	NA	2,6-Dinitrotoluene	606-20-2	0.55	(3)	28	(1)
U107	Di-n-octyl phthalate	NA	Di-n-octyl phthalate	117-84-0	0.54	(1)	28	(1)
U108	1,4-Dioxane	NA	1,4-Dioxane	123-91-1	0.12	(3)	170	(1)
U111	Di-n-propylnitrosoamine	NA	Di-n-propylnitrosoamine	621-64-7	0.40	(3)	14	(1)
U112	Ethyl acetate	NA	Ethyl acetate	141-78-6	0.34	(3)	33	(1)
U117	Ethyl ether	NA	Ethyl ether	60-29-7	0.12	(3)	160	(1)
U118	Ethyl methacrylate	NA	Ethyl methacrylate	97-63-2	0.14	(3)	160	(1)
U120	Fluoranthene	NA	Fluoranthene	206-44-0	0.068	(3)	8.2	(1)
U121	Trichloromonofluoromethane.	NA	Trichloromonofluoromethane.	75-69-4	0.020	(3)	33	(1)
U127	Hexachlorobenzene	NA	Hexachlorobenzene	118-74-1	0.055	(3)	37	(1)
U128	Hexachlorobutadiene	NA	Hexachlorobutadiene	87-68-3	0.055	(3)	28	(1)
U129	Lindane	NA	alpha-BHC	319-84-6	0.00014	(3)	0.66	(1)
			beta-BHC	319-85-7	0.00014	(3)	0.66	(1)
			Delta-BHC	319-86-8	0.023	(3)	0.66	(1)
			gamma-BHC (Lindane)	58-89-9	0.0017	(3)	0.66	(1)
U130	Hexachlorocyclopentadiene.	NA	Hexachlorocyclopentadiene.	77-47-7	0.057	(3)	3.6	(1)
U131	Hexachloroethane	NA	Hexachloroethane	67-72-1	0.055	(3)	28	(1)
U134	Hydrogen fluoride	Table 2 in 268.42	Fluoride	16964-48-8	35		NA	
U136	Cacodylic acid	Table CCWE in 268.41	Arsenic	7440-38-2	0.79		NA	
U137	Indeno(1,2,3-c,d)pyrene.	NA	Indeno(1,2,3-c,d)pyrene.	193-39-5	0.0055	(3)	8.2	(1)
U138	Iodomethane	NA	Iodomethane	74-88-4	0.19	(3)	65	(1)
U140	Isobutyl alcohol	NA	Isobutyl alcohol	78-83-1	5.6		170	(1)
U141	Isosafrole	NA	Isosafrole	120-58-1	0.081		2.6	(1)
U142	Kepone	NA	Kepone	143-50-8	0.0011		0.13	(1)
U144	Lead acetate	Table CCWE in 268.41	Lead	7439-92-1	0.040		NA	
U145	Lead phosphate	Table CCWE in 268.41	Lead	7439-92-1	0.040		NA	
U146	Lead subacetate	Table CCWE in 268.41	Lead	7439-92-1	0.040		NA	
U151	Mercury	Table CCWE in 268.41 and Table 2 in 268.42.	Mercury	7439-97-6	0.030		NA	
U152	Methacrylonitrile	NA	Methacrylonitrile	126-98-7	0.24	(3)	84	(1)
U154	Methanol	NA	Methanol	67-56-1	5.6		NA	
U155	Methapyrilene	NA	Methapyrilene	91-80-5	0.081		1.5	(1)
U157	3-Methylcholanthrene	NA	3-Methylcholanthrene	56-49-5	0.0055	(3)	15	(1)

268.43 TABLE CCW.—CONSTITUENT CONCENTRATIONS IN WASTES—Continued

Waste code	Commercial chemical name	See also	Regulated hazardous constituent	CAS number for regulated hazardous constituent	Wastewaters		Nonwastewaters	
					Concentration (mg/l)	Notes	Concentration (mg/kg)	Notes
U158	4,4'-Methylenebis(2-chloroaniline).	NA	4,4'-Methylenebis(2-chloroaniline).	101-14-4	0.50	(2)	35	(1)
U159	Methyl ethyl ketone	NA	Methyl ethyl ketone	78-93-3	0.28		36	(1)
U161	Methyl isobutyl ketone	NA	Methyl isobutyl ketone	108-10-1	0.14		33	(1)
U162	Methyl methacrylate	NA	Methyl methacrylate	80-62-6	0.14		160	(1)
U165	Naphthalene	NA	Naphthalene	91-20-3	0.059	(2)	3.1	(1)
U168	2-Naphthylamine	Table 2 in 268.42	2-Naphthylamine	91-59-8	0.52	(2)	NA	
U169	Nitrobenzene	NA	Nitrobenzene	98-95-3	0.068	(2)	14	(1)
U170	4-Nitrophenol	NA	4-Nitrophenol	100-02-7	0.12	(2)	29	(1)
U172	n-Nitrosodi-n-butylamine.	NA	n-Nitrosodi-n-butylamine.	924-16-3	0.40	(2)	17	(1)
U174	N-Nitrosodiethylamine	NA	n-Nitrosodiethylamine	55-18-5	0.40	(2)	28	(1)
U179	N-Nitrosopiperidine	NA	n-Nitrosopiperidine	100-75-4	0.013	(2)	35	(1)
U180	N-Nitrosopyrrolidine	NA	n-Nitrosopyrrolidine	930-55-2	0.013	(2)	35	(1)
U181	5-Nitro-o-toluidine	NA	5-Nitro-o-toluidine	99-55-8	0.32	(2)	28	(1)
U183	Pentachlorobenzene	NA	Pentachlorobenzene	608-93-5	0.055	(2)	37	(1)
U185	Pentachloronitrobenzene.	NA	Pentachloronitrobenzene.	82-68-8	0.055	(2)	4.8	(1)
U187	Phenacetin	NA	Phenacetin	62-44-2	0.081		16	(1)
U188	Phenol	NA	Phenol	108-95-2	0.039		6.2	(1)
U190	Phthalic anhydride (measured as Phthalic acid).	NA	Phthalic anhydride (measured as Phthalic acid).	85-44-9	0.54	(1)	28	(1)
U192	Pronamide	NA	Pronamide	23950-58-5	0.093		1.5	(1)
U196	Pyridine	NA	Pyridine	110-86-1	0.014	(2)	16	(1)
U203	Safrole	NA	Safrole	94-59-7	0.081		22	(1)
U204	Selenium dioxide	Table CCWE in 268.41	Selenium	7782-49-2	1.0		NA	
U205	Selenium sulfide	Table CCWE in 268.41	Selenium	7782-49-2	1.0		NA	
U207	1,2,4,5-Tetrachlorobenzene.	NA	1,2,4,5-Tetrachlorobenzene.	95-94-3	0.055	(2)	19	(1)
U208	1,1,1,2-Tetrachloroethane.	NA	1,1,1,2-Tetrachloroethane.	630-20-6	0.057		42	(1)
U209	1,1,2,2-Tetrachloroethane.	NA	1,1,2,2-Tetrachloroethane.	79-34-5	0.057	(2)	42	(1)
U210	Tetrachloroeth-ylene	NA	Tetrachloroethylene	127-18-4	0.056	(2)	5.6	(1)
U211	Carbon tetrachloride	NA	Carbon tetrachloride	56-23-5	0.057	(2)	5.6	(1)
U214	Thallium(I)acetate	Table 2 in 268.42	Thallium	7440-28-0	0.14	(2)	NA	
U215	Thallium(I) carbonate	Table 2 in 268.42	Thallium	7440-28-0	0.14	(2)	NA	
U216	Thallium(I)chloride	Table 2 in 268.42	Thallium	7440-28-0	0.14	(2)	NA	
U217	Thallium(I)nitrate	Table 2 in 268.42	Thallium	7440-28-0	0.14	(2)	NA	
U220	Toluene	NA	Toluene	108-88-3	0.080	(2)	28	(1)
U225	Tribromomethane (Bromoform).	NA	Tribomomethane (Bromoform).	75-25-2	0.63	(2)	15	(1)
U226	1,1,1-Trichloroethane	NA	1,1,1-Trichloroethane	71-55-6	0.054	(2)	5.6	(1)
U227	1,1,2-Trichloroethane	NA	1,1,2-Trichloroethane	79-00-5	0.054	(2)	5.6	(1)
U228	Trichlorothylene	NA	Trichloroethylene	79-01-6	0.054	(2)	5.6	(1)
U235	tris-(2,3-Dibromopropyl) phosphate.	NA	tris-(2,3-Dibromopropyl)-phosphate.	126-72-7	0.025		0.10	(1)
U239	Xylenes	NA	Xylenes		0.32	(2)	28	(1)
U240	2,4,-Dichlorophenoxyacetic acid.	NA	2,4-Dichlorophenoxyacetic acid.	94-75-7	0.72		10	(1)
U243	Hexachloropropene	NA	Hexachloropropene	1888-71-7	0.035	(2)	28	
U247	Methoxychlor	NA	Methoxychlor	72-43-5	0.25	(2)	0.18	(1)

[1] Treatment standards for this organic constituent were established based upon incineration in units operated in accordance with the technical requirements of 40 CFR Part 264 Subpart O or Part 265 Subpart O, or based upon combustion in fuel substitution units operating in accordance with applicable technical requirements. A facility may certify compliance with these treatment standards according to provisions in 40 CFR Section 268.7.

[2] Based on analysis of composite samples.

[3] As analyzed using SW-846 Method 9010 or 9012; sample size 10 gram; distillation time: one hour and fifteen minutes.

[4] Reserved.

Note: NA means Not Applicable.

LAIDLAW
ENVIRONMENTAL
SERVICES

CERTIFICATE OF NON-HAZARDOUS WASTE
AND
AFFIDAVIT REQUIREMENT OF RULE 310:270-9-7 (B) (2)
CERTIFYING NON-HAZARDOUS WASTE

I certify that the waste described in this and attached documents is not a listed hazardous waste as described by 40 CFR Subpart D and that the waste described is not contaminated with a listed hazardous waste. I further certify under penalty of law that I have personally examined and am familiar with the information submitted in this and all attached documents, and that based upon my inquiry of those individuals immediately responsible for obtaining the information, I am aware that there are significant penalties for submitting false information, including the possibility of fine and imprisonment.

_____, here called "Generator" and contracted with United State Pollution Control, Inc., here called "Contractor" for transportation, storage, treatment, and disposal of the solid waste described below and Generator hereby certifies and warrants to Contractor that the solid waste to be so disposed of is not "hazardous waste" as the term is defined in title 42 United States Code 6903, because said waste meets the following conditions:

a) Said waste is exempt from regulation because it meets the provisions of 40 Code of Federal Regulations 261.4 and/or

b) Said waste is not listed as a hazardous waste in Subpart D of Title 40 Code of Federal Regulations Part 261 and said waste is not classified as a hazardous waste in Subpart C Title 40 Code of Federal Regulations part 261 as a result of actual testing or knowledge of the hazard characteristics of the waste in the light of the materials or process used.

ACCEPTANCE #:

DESCRIPTION OF NON-HAZARDOUS WASTE:

ORIGIN OF WASTE:

TYPICAL ANALYSIS OF WASTE:

Compound	Concentration of Volume

DATED THIS_____, 19_____, GENERATOR_____

BY_____, TITLE_____

USPCI
Hydrocarbon Recyclers, Inc. of Wichita 2549 North New York
Wichita, Kansas 67219
Wats 800.316.0037 Phone 316.268.7500 Fax 316.268.7555

Attachment C-B

Waste List

April 13, 1995

EPA Hazardous Waste Number:	Hazardous Waste/Constituent:

Hazardous Waste by Characteristic:

D001 (I)	Ignitability
D002 (C)	Corrosivity
D003 (R)	Reactivity
D004 (E)	Arsenic
D005 (E)	Barium
D006 (E)	Cadmium
D007 (E)	Chromium
D008 (E)	Lead
D009 (E)	Mercury
D010 (E)	Selenium
D011 (E)	Silver
D012 (E)	Endrin (1,2,3,4,10,10-hexachloro-1,7 epoxy-1,4,4a,5,6,;7,8,8a-octahydro-1,4 endo,endo-5,8-dimeth-ano-naphthalene)
DO13 (E)	Lindane (1,2,3,4,5,6, hexa-chloro-cyclohexane, gamma isomer
D014 (E)	Methoxychlor (1,1,1-Trichloro- 2,2-bis [p-methoxyphenyl]ethane
D015 (E)	Toxaphene ($C_{10}H_{10}Cl_8$, technical chlorinated camphene, 67-69 percent chlorine)
D016 (E)	2,4-D (2,4 dichlorophenoxyacetic acid)
D017 (E)	2,4,5-TP Silvex (2,4,5-trichloro-phenoxypropionic acid)
D018 (E)	Benzene
D019 (E)	Carbon tetrachloride
D020 (E)	Chlordane
D021 (E)	Chlorobenzene
D022 (E)	Choroform
D023 (E)	o-Cresol
D024 (E)	m-Cresol
D025 (E)	p-Cresol
D026 (E)	Cresol
D027 (E)	1,4-Dichlorobenzene
D028 (E)	1,2-Dichloroethane
D029 (E)	1,1-Dichloroethylene

Basis for listing or class of hazardous waste:

(I)	Ignitable	Toxicity Characteristic Waste	(E)
(C)	Corrosive	Acute Hazardous Waste	(H)
(R)	Reactive	Toxic Waste	(T)

EPA Hazardous Waste Number:	Hazardous Waste/Constituent:
D030 (E)	2,4-Dinitrotoluene
D031 (E)	Heptachlor (and its hydroxide)
D032 (E)	Hexachlorobenzene
D033 (E)	Hexachloro-1,3-butadiene
D034 (E)	Hexachloroethane
D035 (E)	Methyl ethyl ketone
D036 (E)	Nitrobenzene
D037 (E)	Pentachlorophenol
D038 (E)	Pyridine
D039 (E)	Tetrachloroethylene
D040 (E)	Trichloroethylene
D041 (E)	2,4,5-Trichlorophenol
D042 (E)	2,4,6-Trichlorophenol
D043 (E)	Vinyl Chloride

Basis for listing or class of hazardous waste:

(I)	Ignitable	Toxicity Characteristic Waste	(E)
(C)	Corrosive	Acute Hazardous Waste	(H)
(R)	Reactive	Toxic Waste	(T)

EPA Hazardous Waste Number:	Hazardous Waste/Constituent:

Hazardous Wastes from Non-specific Sources:

F001 (T)	The following spent halogenated solvents used in degreasing: Tetrachloroethylene, trichloroethylene, methylene chloride, 1,1,1-trichloroethane, carbon tetrachloride, and chlorinated fluorocarbons; all spent solvent mixtures/blends used in degreasing containing, before use, a total of ten percent or more (by volume) of one or more of the above halogenated solvents or those solvents listed in F002, F004 and F005; and still bottoms from the recovery of these spent solvents and spent solvent mixtures.
F002 (T)	The following spent halogenated solvents: Tetrachloroethylene, methylene chloride, trichloroethylene, 1,1,1-trichloroethane, chlorobenzene, 1,1,2-trichloro-1,2,2-triflouroethane, ortho-dichlorobenzene, trichlorofluoromethane, and 1,1,2-trichloroethane; all spent solvent mixtures/blends containing, before use, a total of ten percent or more (by volume) of one or more of the above halogenated solvents or those listed in F001,F004, or F005; and still bottoms from the recovery of these spent solvents and spent solvent mixtures.
F003 (I)	The following spent non-halogenated solvents: Xylene, acetone, ethyl acetate, ethyl benzene, ethyl ether, methyl isobutyl ketone, n-butyl alcohol, cyclohexanone, and methanol; all spent solvent mixtures/blends containing, before use, only the above spent non-halogenated solvents; and all spent solvent mixtures/blends containing, before use, one

Basis for listing or class of hazardous waste:

(I)	Ignitable	Toxicity Characteristic Waste	(E)
(C)	Corrosive	Acute Hazardous Waste	(H)
(R)	Reactive	Toxic Waste	(T)

EPA Hazardous Waste Number:	Hazardous Waste/Constituent:
	or more of the above non-halogenated solvents, and, a total of ten percent or more (by volume) of one or more of those solvents listed in F001, F002, F004, and F005; and still bottoms from the recovery of these spent solvents and spent solvent mixtures.
F004 (T)	The following spent non-halogenated solvents: Cresols and cresylic acid, nitrobenzene; all spent solvent mixtures/blends containing, before use, a total of ten percent or more (by volume) of one or more of the above non-halogenated solvents or those solvents listed in F001, F002, and F005; and still bottoms from the recovery of these spent solvents and spent solvent mixtures.
F005 (I,T)	The following spent non-halogenated solvents: Toluene, methyl ethyl ketone, carbon disulfide, isobutanol, and pyridine; benzene, 2-ethoxyethanol, and 2-nitropropane; all spent solvent mixtures/blends containing, before use, a total of ten percent or more (by volume) of one or more of the above non-halogenated solvents or those solvents listed in F001, F002, or F004; and still bottoms from the recovery of these spent solvents and spent solvent mixtures.
F006 (T)	Wastewater treatment sludges from electroplating operations except from the following processes: (1) Sulfuric acid anodizing of aluminum; (2) tin plating on carbon steel; (3) zinc plating (segregated basis) on carbon steel; (4) aluminum or zinc-aluminum plating on carbon steel; (5) cleaning/stripping associated with tin, zinc

Basis for listing or class of hazardous waste:

(I)	Ignitable	Toxicity Characteristic Waste	(E)
(C)	Corrosive	Acute Hazardous Waste	(H)
(R)	Reactive	Toxic Waste	(T)

EPA Hazardous Waste Number:	Hazardous Waste/Constituent:
	and aluminum plating on carbon steel; and (6) chemical etching and milling of aluminum.
F007 (R,T)	Spent cyanide plating bath solutions from electroplating operations
F008 (R,T)	Plating bath residues from the bottom of plating baths from electroplating operations where cyanides are used in the process.
F009 (R,T)	Spent stripping and cleaning bath solutions from electroplating operations where cyanides are used in the process.
F010 (R,T)	Quenching bath residues from oil baths from metal heat treating operations where cyanides are used in the process.
F011 (R,T)	Spent cyanide solutions from salt bath pot cleaning from metal heat treating operations
F012 (T)	Quenching wastewater treatment sludges from metal heat treating operations where cyanides are used in the process.
F019 (T)	Wastewater treatment sludges from the chemical conversion coating of aluminum.
F024 (T)	Process wastes, including but not limited to distillation residues, heavy ends, tars, and reactor clean-out wastes from the production of chlorinated aliphatic hydrocarbons by free radical catalyzed processes. These chlorinated aliphatic hydrocarbons are those having carbon chain lengths ranging from one to and including five, with varying amounts and positions of chlorine substitution.

Basis for listing or class of hazardous waste:

(I)	Ignitable	Toxicity Characteristic Waste	(E)
(C)	Corrosive	Acute Hazardous Waste	(H)
(R)	Reactive	Toxic Waste	(T)

EPA Hazardous Waste Number:	Hazardous Waste/Constituent:
	(This listing does not include wastewaters, wastewater treatment sludges, spent catalysts, and wastes listed in 261.31 or 261.32).
F025 (T)	Condensed light ends, spent filters and filter aids and spent desiccant wastes from the production of certain chlorinated aliphatic hydrocarbons by free radical catalyzed processes. These chlorinated aliphatic hydrocarbons are those having carbon chain lengths ranging from one to and including five with varying amounts and positions of chlorine substitution.
F032 (T)	Wastewaters, process residuals, preservative drippage, and spent formulations from wood preserving processes generated at plants that currently use or have previously used chlorophenolic formulations except potentially cross-contaminated wastes that have had the F032 waste code deleted in accordance with ' 261.35 of this chapter and where the generator does not resume or initiate use of chlorophenolic formulations). This listing does not include K001 bottom sediments sludge from the treatment of wastewater from wood preserving processes that use creosote and/or pentachlorophenol.
F034 (T)	Wastewaters, process residuals, preservative drippage, and spent formulations from wood preserving processes generated at plants that use creosote formulations. This listing does not include K001 bottom sediment sludge from the treatment of wastewater from wood preserving processes that use creosote and/or

Basis for listing or class of hazardous waste:

(I)	Ignitable	Toxicity Characteristic Waste	(E)
(C)	Corrosive	Acute Hazardous Waste	(H)
(R)	Reactive	Toxic Waste	(T)

EPA Hazardous Waste Number:	Hazardous Waste/Constituent:
	pentachlorophenol.
F035 (T)	Wastewaters, process residuals, preservative drippage, and spent formulations from wood preserving processes generated at plants that use inorganic preservatives containing arsenic or chromium. This listing does not include K001 bottom sediment sludge from the treatment of wastewater from wood preserving processes that use creosote and/or pentachlorophenol.
F037 (T)	Petroleum refinery primary oil/water/solids separation sludge--Any sludge generated from the gravitational separation of oil/water/solids during the storage or treatment of process wastewaters and oily cooling wastewaters from petroleum refineries. Such sludges include but are not limited to, those generated in: oil/water/solids separators; tanks and impoundments; ditches and other conveyances; sumps; and stormwater units receiving dry weather flow. Sludge generated in stormwater units that do not receive dry weather flow, sludges generated from non-contact once-through cooling waters segregated for treatment from other process or oily cooling waters, sludges generated in aggressive biological treatment units as defined in ' 261.31(b)(2) (including sludges generated in one or more additional units after wastewaters have been treated in aggressive biological treatment units) and K051 wastes are not included in this listing.
F038 (T)	Petroleum refinery secondary (emulsified)

Basis for listing or class of hazardous waste:

(I)	Ignitable	Toxicity Characteristic Waste	(E)
(C)	Corrosive	Acute Hazardous Waste	(H)
(R)	Reactive	Toxic Waste	(T)

EPA Hazardous Waste Number:	Hazardous Waste/Constituent:
	oil/water/solids separation sludge--Any sludge and/or float generated from the physical and/or chemical separation of oil/water/solids in process wastewaters and oily cooling wastewaters from petroleum refineries. Such wastes include, but are not limited to, all sludges and floats generated in: induced air flotation (IAF) units, tanks and impoundments, and all sludges generated in DAF units.* Sludges generated in stormwater units that do not receive dry weather flow, sludges generated from non-contact once-through cooling waters segregated for treatment from other process or oily cooling waters, sludges and floats generated in aggressive biological treatment units as defined in ' 261.31(b)(2) (including sludges and floats generated in one or more additional units after wastewaters have been treated in aggressive biological treatment units) and F037, K048, and K051 wastes are not included in this listing.
F039 [1]	Leachate resulting from the treatment, storage, or disposal of wastes classified by more than one waste code under Subpart D, or from a mixture of wastes classified under Subparts C and D of this part. (Leachate resulting from the management of one or more of the following EPA Hazardous Wastes and no other hazardous wastes retains its hazardous waste code(s): F020, F021, F022, F023, F026, F027, and/or F028).

[1]All constituents for which treatment standards are specified for multi-source leachate (wastewaters and non-wastewaters) under 40 CFR 268.43(a), Table CCW.

Basis for listing or class of hazardous waste:

(I)	Ignitable	Toxicity Characteristic Waste	(E)
(C)	Corrosive	Acute Hazardous Waste	(H)
(R)	Reactive	Toxic Waste	(T)

EPA Hazardous Waste Number:	Hazardous Waste/Constituent:

Hazardous Wastes from Specific Sources:

K001 (T)	Bottom sediment sludge from the treatment of wastewaters from wood preserving processes that use creosote and/or pentachlorophenol.
K002 (T)	Wastewater treatment sludge from the production of chrome yellow and orange pigments.
K003 (T)	Wastewater treatment sludge from the production of molybdate orange pigments.
K004 (T)	Wastewater treatment sludge from the production of zinc yellow pigments.
K005 (T)	Wastewater treatment sludge from the production of chrome green pigments.
K006 (T)	Wastewater treatment sludge from the production of chrome oxide green pigments.
K007 (T)	Wastewater treatment sludge from the production of iron blue pigments.
K008 (T)	Oven residue from the production of chrome oxide green pigments.
K009 (T)	Distillation bottoms from the production of acetaldehyde from ethylene.
K010 (T)	Distillation side cuts from the production of acetaldehyde from ethylene.
K011 (R,T)	Bottom stream from the wastewater stripper in the production of acrylonitrile.

Basis for listing or class of hazardous waste:

(I)	Ignitable	Toxicity Characteristic Waste	(E)
(C)	Corrosive	Acute Hazardous Waste	(H)
(R)	Reactive	Toxic Waste	(T)

EPA Hazardous Waste Number:	Hazardous Waste/Constituent:
K013 (R,T)	Bottom stream from the acetonitrile column in the production of acrylonitrile.
K014 (T)	Bottoms from the acetonitrile purification column in the production of acrylonitrile.
K015 (T)	Still bottoms from the distillation of benzyl chloride.
K016 (T)	Heavy ends or distillation residues from the production of carbon tetrachloride.
K017 (T)	Heavy ends (still bottoms) from the purification column in the production of epichlorohydrin.
K018 (T)	Heavy ends from the fractionation column in ethyl chloride production.
K019 (T)	Heavy ends from the distillation of ethylene dichloride in ethylene dichloride production.
K020 (T)	Heavy ends from the distillation of vinyl chloride in vinyl chloride monomer production.
K021 (T)	Aqueous spent antimony catalyst waste from fluoromethanes production.
K022 (T)	Distillation bottom tars from the production of phenol/acetone from cumene.
K023 (T)	Distillation light ends from the production of phthalic anhydride from naphthalene.
K024 (T)	Distillation bottoms from the production of phthalic anhydride from naphthalene.

Basis for listing or class of hazardous waste:

(I)	Ignitable	Toxicity Characteristic Waste	(E)
(C)	Corrosive	Acute Hazardous Waste	(H)
(R)	Reactive	Toxic Waste	(T)

EPA Hazardous Waste Number:	Hazardous Waste/Constituent:
K025 (T)	Distillation bottoms from the production of nitrobenzene by the nitration of benzene.
K026 (T)	Stripping still tails from the production of methy ethyl pyridines.
K027 (R,T)	Centrifuge and distillation residues from toluene diisocyanate production.
K028 (T)	Spent catalyst from the hydrochlorinator reactor in the production of 1,1,1-trichloroethane.
K029 (T)	Waste from the product steam stripper in the production of 1,1,1-trichloroethane.
K030 (T)	Column bottoms or heavy ends from the combined production of trichloroethylene and perchloroethylene.
K031 (T)	By-product salts generated in the production of MSMA and cacodylic acid.
K032 (T)	Wastewater treatment sludge from the production of chlordane.
K033 (T)	Wastewater and scrub water from the chlorination of cyclopentadiene in the production of chlordane.
K034 (T)	Filter solids from the filtration of hexachlorocyclopentadiene in the production of chlordane.
K035 (T)	Wastewater treatment sludges generated in the production of creosote.

Basis for listing or class of hazardous waste:

(I)	Ignitable	Toxicity Characteristic Waste	(E)
(C)	Corrosive	Acute Hazardous Waste	(H)
(R)	Reactive	Toxic Waste	(T)

EPA Hazardous Waste Number:	Hazardous Waste/Constituent:
K036 (T)	Still bottoms from toluene reclamation distillation in the production of disulfoton.
K037 (T)	Wastewater treatment sludges from the production of disulfoton.
K038 (T)	Wastewater from the washing and stripping of phorate production.
K039 (T)	Filter cake from the filtration of diethylphosphorodithioic acid in the production of phorate.
K040 (T)	Wastewater treatment sludge from the production of phorate.
K041 (T)	Wastewater treatment sludge from the production of toxaphene.
K042 (T)	Heavy ends or distillation residues from the distillation of tetrachlorobenzene in the production of 2,4,5-T.
K043 (T)	2,6-Dichlorophenol waste from the production of 2,4-D.
K044 (R)	Wastewater treatment sludges from the manufacturing and processing of explosives.
K045 (R)	Spent carbon from the treatment of wastewater containing explosives.
K046 (T)	Wastewater treatment sludges from the manufacturing, formulation and loading of lead-based initiating compounds.

Basis for listing or class of hazardous waste:

(I)	Ignitable	Toxicity Characteristic Waste	(E)
(C)	Corrosive	Acute Hazardous Waste	(H)
(R)	Reactive	Toxic Waste	(T)

EPA Hazardous Waste Number:	Hazardous Waste/Constituent:
K047 (R)	Pink/red water from TNT operations.
K048 (T)	Dissolved air flotation (DAF) float from the petroleum refining industry.
K049 (T)	Slop oil emulsion solids from the petroleum refining industry.
K050 (T)	Heat exchanger bundle cleaning sludge from the petroleum refining industry.
K051 (T)	API separator sludge from the petroleum refining industry.
K052 (T)	Tank bottoms (leaded) from the petroleum refining industry.
K060 (T)	Ammonia still lime sludge from coking operations.
K061 (T)	Emission control dust/sludge from the primary production of steel in electric furnaces.
K062 (C,T)	Spent pickle liquor generated by steel finishing operations of facilities within the iron and steel industry (SIC Codes 331 and 332).
K064 (T)	Acid plant blowdown slurry/sludge resulting from the thickening of blowdown slurry from primary copper production.
K065 (T)	Surface impoundment solids contained in and dredged from surface impoundments at primary lead smelting facilities
K066 (T)	Sludge from treatment of process wastewater

Basis for listing or class of hazardous waste:

(I) Ignitable
(C) Corrosive
(R) Reactive
Toxicity Characteristic Waste (E)
Acute Hazardous Waste (H)
Toxic Waste (T)

EPA Hazardous Waste Number:	Hazardous Waste/Constituent:
	and/or acid plant blowdown from primary zinc production.
K069 (T)	Emission control dust/sludge from secondary lead smelting. (Note: This listing is stayed administratively for sludge generated from secondary acid scrubber systems. The stay will remain in effect until further administrative action is taken. If EPA takes further action effecting this stay, EPA will publish a notice of the action in the Federal Register.)
K071 (T)	Brine purification muds from the mercury cell process in chlorine production, where separately prepurified brine is not used.
K073 (T)	Chlorinated hydrocarbon waste from the purification step of the diaphragm cell process using graphite anodes in chlorine production.
K083 (T)	Distillation bottoms from aniline production.
K084 (T)	Wastewater treatment sludges generated during the production of veterinary pharmaceuticals from arsenic or organo-arsenic compounds.
K085 (T)	Distillation or fractionation column bottoms from the production of chlorobenzenes.
K086 (T)	Solvent washes and sludges, caustic washes and sludges, or water washes and sludges from cleaning tubs and equipment used in the formulation of ink from pigments, driers, soaps, and stabilizers containing chromium and lead.

Basis for listing or class of hazardous waste:

(I)	Ignitable	Toxicity Characteristic Waste	(E)
(C)	Corrosive	Acute Hazardous Waste	(H)
(R)	Reactive	Toxic Waste	(T)

EPA Hazardous Waste Number:	Hazardous Waste/Constituent:
K087 (T)	Decanter tank tar sludge from coking operations.
K088 (T)	Spent potliners from primary aluminum reduction.
K090 (T)	Emission control dust or sludge from ferrochromiumsilicon production.
K091 (T)	Emission control dust or sludge from ferrochromium production.
K093 (T)	Distillation light ends from the production of phthalic anhydride from ortho-xylene.
K094 (T)	Distillation bottoms from the production of phthalic anhydride from ortho-xylene.
K095 (T)	Distillation bottoms from the production of 1,1,1-trichloroethane.
K096 (T)	Heavy ends from the heavy ends column from the production of 1,1,1-trichloroethane.
K097 (T)	Vacuum stripper discharge from the chlordane chlorinator in the production of chlordane.
K098 (T)	Untreated process wastewater from the production of toxaphene.
K099 (T)	Untreated wastewater from the production of 2,4-D.
K100 (T)	Waste leaching solution from acid leaching of emission control dust/sludge from secondary lead smelting.

Basis for listing or class of hazardous waste:

(I) Ignitable
(C) Corrosive
(R) Reactive
Toxicity Characteristic Waste (E)
Acute Hazardous Waste (H)
Toxic Waste (T)

EPA Hazardous Waste Number:	Hazardous Waste/Constituent:
K101 (T)	Distillation tar residues from the distillation of aniline-based compounds in the production of veterinary pharmaceuticals from arsenic or organo-arsenic compounds.
K102 (T)	Residue from the use of activated carbon for decolorization in the production of veterinary pharmaceuticals from arsenic or organo-arsenic compounds.
K103 (T)	Process residues from aniline extraction from the production of aniline.
K104 (T)	Combined wastewater streams generated from nitrobenzene/aniline production.
K105 (T)	Separated aqueous stream from the reactor product washing step in the production of chlorobenzenes.
K106 (T)	Wastewater treatment sludge from the mercury cell process in chlorine production.
K107 (C,T)	Column bottoms from product seperation from the production of 1,1-dimethylhydrazine (UDMH) from carboxylic acid hydrazines.
K108 (I,T)	Condensed column overheads from product separation and condensed reactor vent gases from the production of 1,1- dimethylhydrazine (UDMH) from carboxylic acid hydrazides.
K109 (T)	Spent filter cartridges from product purification from the production of 1,1-dimethylhydrazine (UDMH) from carboxylic

Basis for listing or class of hazardous waste:

(I)	Ignitable	Toxicity Characteristic Waste	(E)
(C)	Corrosive	Acute Hazardous Waste	(H)
(R)	Reactive	Toxic Waste	(T)

EPA Hazardous Waste Number:	Hazardous Waste/Constituent:
acid	hydrazides.
K110 (T)	Condensed column overheads from intermediate separation from the production of 1,1-dimethylhydrazine (UDMH) from carboxylic
acid	hydrazides.
	K111(C,T) Product washwaters from the production of dinitrotoluene via nitration of toluene.
K112 (T)	Reaction by-product water from the drying column in the production of toluenediamine via hydrogenation of dinitrotoluene.
K113 (T)	Condensed liquid light ends from the purification of toluenediamine in the production of toluenediamine via hydrogenation dinitrotoluene.
K114 (T)	Vicinals from the purification of toluenediamine in the production of toluenediamine via hydrogenation of dinitrotoluene.
K115 (T)	Heavy ends from the purification of toluenediamine in the production of toluenediamine via hydrogenation of dinitrotoluene.
K116 (T)	Organic condensate from the solvent recovery column in the production of toluene diisocyanate via phosgenation of toluenediamine.
K117 (T)	Wastewater from the reactor vent gas scrubber in the production of ethylene dibromide via

Basis for listing or class of hazardous waste:

(I)	Ignitable	Toxicity Characteristic Waste	(E)
(C)	Corrosive	Acute Hazardous Waste	(H)
(R)	Reactive	Toxic Waste	(T)

EPA Hazardous Waste Number:	Hazardous Waste/Constituent:
	bromination of ethene.
K118 (T)	Spent adsorbent solids from purification of ethylene dibromide in the production of ethylene dibromide via bromination of ethene.
K123 (T)	Process wastewater (including supernates, filtrates, and washwaters) from the production of ethylenebisdithiocarbamic acid and its salt.
K124 (T,C)	Reactor vent scrubber water from the production of ethylenebisdithiocarbamic acid and its salts.
K125 (T,C)	Filtration, evaporation, and centrifugation solids from the production of ethylenebisdithiocarbamic acid and its salts.
K126 (T)	Baghouse dust and floor sweepings in milling and packaging operations from production or formulation of ethylenebisdithiocarbamic acid and its salts.
K131 (C,T)	Wastewater from the reactor and spent sulfuric acid from the acid dryer from the production of methyl bromide.
K132 (T)	Spent absorbent and wastewater separator solids from the production of methyl bromide.
K136 (T)	Still bottoms from the purification of ethylene dibromide in the production of ethylene dibromide via bromination of ethene.
K141 (T)	Process residues from the recovery of coal

Basis for listing or class of hazardous waste:

(I) Ignitable
(C) Corrosive
(R) Reactive
Toxicity Characteristic Waste (E)
Acute Hazardous Waste (H)
Toxic Waste (T)

EPA Hazardous Waste Number:	Hazardous Waste/Constituent:
	tar, including, but not limited to, collecting sump residues from the production of coke from coal or the recovery of coke by-products produced from coal. This listing does not include K087 (decanter tank tar sludges from coking operations).
K142 (T)	Tar storage tank residues from the production of coke from coal or from the recovery of coke by-products produced from coal.
K143 (T)	Process residues from the recovery of light oil, including, but not limited to, those generated in stills, decanters, and wash oil recovery units from the recovery of coke by-products produced from coal.
K144 (T)	Wastewater sump residues from light oil refining, including, but not limited to, intercepting or contamination sump sludges from the recovery of coke by-products produced from coal.
K145 (T)	Residues from naphthalene collection and recovery operations from the recovery of coke by-products produced from coal.
K147 (T)	Tar storage tank residues from coal tar refining.
K148 (T)	Residues from coal tar distillation, including, but not limited to, still bottoms.
K149 (T)	Distillation bottoms from the production of alpha- (or methyl-) chlorinated toluenes, ring-chlorinated toluenes, benzoyl chlorides, and compounds with mixtures of these

Basis for listing or class of hazardous waste:

(I)	Ignitable	Toxicity Characteristic Waste	(E)
(C)	Corrosive	Acute Hazardous Waste	(H)
(R)	Reactive	Toxic Waste	(T)

EPA Hazardous Waste Number:	Hazardous Waste/Constituent:
	functional groups. (This waste does not include still bottoms from the distillation of benzyl chloride).
K150 (T)	Organic residuals, excluding spent carbon adsorbent, from the spent chlorine gas and hydrochloric acid recovery processes associated with the production of alpha- (or methyl-) chlorinated toluenes, ring-chlorinated toluenes, benzoyl chlorides, and compounds with mixtures of these functional groups.

Basis for listing or class of hazardous waste:

(I)	Ignitable	Toxicity Characteristic Waste	(E)
(C)	Corrosive	Acute Hazardous Waste	(H)
(R)	Reactive	Toxic Waste	(T)

EPA Hazardous Waste Number:	Hazardous Waste/Constituent:
K151 (T)	Wastewater treatment sludges, excluding neutralization and biological sludges, generated during the treatment of wastewaters from the production of alpha- (or methyl-) chlorinated toluenes, ring-chlorinated toluenes, benzoyl chlorides, and compounds with mixtures of these functional groups.
K156 (T)	Organic Waste (including heavy ends, still bottoms, light ends, spent solvents, filters, and decantates) from the production of carbamates and carbamoyl oximes.
K157 (T)	Wastewaters (including scrubber waters, condenser waters, washwaters, and separation waters) from the production of carbamates and carbamoyl oximes.
K158 (T)	Bag house dusts and filter/separation solids from the production of carbamates and carbamoyl oximes.
K159 (T)	Organics from the treatment of thiocarbamate wastes.
K160 (T)	Solids (including filter wastes, separation solids, and spent catalysts) from the production of thiocarbamates and solids from the treatment of thiocarbamate wastes.
K161 (T)	Purification solids (including filtration,

Basis for listing or class of hazardous waste:

(I)	Ignitable	Toxicity Characteristic Waste	(E)
(C)	Corrosive	Acute Hazardous Waste	(H)
(R)	Reactive	Toxic Waste	(T)

EPA Hazardous Waste Number:	Hazardous Waste/Constituent:
	evaporation, and centrifugation solids), bag house dust and floor sweepings from the production of dithiocarbamate acids and their salts. (This listing does not include K125 or K126.)
K169 (T)	Crude oil tank sediment from petroleum refining operations.
K170 (T)	Clarified slurry oil sediment from petroleum refining operations.
K171 (R,T)	Spent hydrotreating catalyst from petroleum refining operations, including guard beds used to desulfurizefeeds to other catlaytic reactors (this listing does not include inert support media).
K172 (R,T)	Spent hydrorefining catalyst from petroleum refining operations.

Basis for listing or class of hazardous waste:

(I)	Ignitable	Toxicity Characteristic Waste	(E)
(C)	Corrosive	Acute Hazardous Waste	(H)
(R)	Reactive	Toxic Waste	(T)

EPA Hazardous Waste Number:		Hazardous Waste/Constituent:

Discarded Commercial Chemical Products, Off-Specification Species, Container Residues, and Spill Residues Thereof:

P001	(H)	Warfarin, & salts, when present at concentrations greater than 0.3%.
P002	(H)	1-Acetyl-2-thiourea
P003	(H)	Acrolein
P004	(H)	Aldrin
P005	(H)	Allyl alcohol
P006	(R,T)	Aluminum phosphide
P007	(H)	5-(Aminomethyl)-3-isoxazolol
P008	(H)	4-Aminopyridine
P009	(R)	Ammonium picrate
P010	(T)	Arsenic acid H_3AsO_4
P011	(T)	Arsenic pentoxide
P012	(T)	Arsenic trioxide
P013	(H)	Barium cyanide
P014	(T)	Benzenethiol
P015	(H)	Beryllium
P016	(H)	Methane, oxybis[chloro-
P017	(T)	Bromoacetone
P018	(H)	Brucine
P020	(H)	Dinoseb
P021	(H)	Calcium cyanide
P022	(T)	Carbon disulfide
P023	(H)	Chloroacetaldehyde
P024	(H)	p-Chloroaniline
P026	(H)	1-(o-Chlorophenyl)thiourea
P027	(H)	3-Chloropropionitrile
P028	(H)	Benzyl chloride
P029	(H)	Copper cyanide
P030	(T)	Cyanides (soluble cyanide salts) not otherwise specified.
P031	(H)	Cyanogen
P033	(H)	Cyanaogen chloride
P034	(T)	2-Cyclohexyl-4,6-dinitrophenol

Basis for listing or class of hazardous waste:

(I)	Ignitable	Toxicity Characteristic Waste	(E)
(C)	Corrosive	Acute Hazardous Waste	(H)
(R)	Reactive	Toxic Waste	(T)

EPA Hazardous Waste Number:		Hazardous Waste/Constituent:
P036	(H)	Dichlorophenylarsine
P037	(H)	Dieldrin
P038	(T)	Diethylarsine
P039	(T)	Disulfoton
P040	(H)	O,O-Diethyl O-pyrazinyl phosphorothioate.
P041	(H)	Diethyl-p-nitrophenyl phosphate
P042	(H)	Epinephrine
P043	(H)	Diisopropylfluorophosphate (DFP)
P044	(T)	Dimethoate
P045	(H)	Thiofanox
P046	(T)	Benzeneethanamine, alpha,alpha-dimethyl-
P047	(H)	4,6-Dinitro-o-cresol, and salts
P048	(H)	2,4-Dinitrophenol
P049	(H)	Dithiobiuret
P050	(H)	Endosulfan
P051	(H)	Endrin
P054	(H)	Aziridine
P056	(H)	Fluorine
P057	(H)	Fluoroacetamide
P058	(H)	Fluoroacetic acid, sodium salt
P059	(H)	Heptachlor
P060	(H)	Isodrin
P062	(H)	Hexaethyl tetraphosphate
P063	(H)	Hydrogen cyanide
P064	(H)	Methyl isocyanate
P065	(R,T)	Mercury fulminate
P066	(H)	Methomyl
P067	(H)	1,2-Propylenimine
P068	(H)	Methyl hydrazine
P069	(H)	2-Methyllactonitrile
P070	(H)	Aldicarb
P071	(H)	Methyl parathion
P072	(H)	alpha-Naphthylthiourea
P073	(H)	Nickel carbonyl
P074	(H)	Nickel cyanide
P075	(T)	Nicotine, and salts
P076	(T)	Nitric oxide

Basis for listing or class of hazardous waste:

(I)	Ignitable	Toxicity Characteristic Waste	(E)
(C)	Corrosive	Acute Hazardous Waste	(H)
(R)	Reactive	Toxic Waste	(T)

EPA Hazardous Waste Number:		Hazardous Waste/Constituent:
P077	(T)	p-Nitroaniline
P078	(H)	Nitrogen dioxide
P081	(R,T)	Nitroglycerine (R)
P082	(H)	N-Nitrosodimethylamine
P084	(H)	N-Nitrosomethylvinylamine
P085	(H)	Octamethylpyrophosphoramide
P087	(H)	Osmium tetroxide
P088	(H)	Endothall
P089	(T)	Parathion
P092	(H)	Phenylmercury acetate
P093	(H)	Phenylthiourea
P094	(T)	Phorate
P095	(T)	Phosgene
P096	(H)	Phosphine
P097	(H)	Famphur
P098	(H)	Potassium cyanide
P099	(H)	Potassium silver cyanide
P101	(H)	Propanenitrile
P102	(H)	Propargyl alcohol
P103	(H)	Selenourea
P104	(H)	Silver cyanide
P105	(H)	Sodium azide
P106	(H)	Sodium cyanide
P108	(T)	Strychnine and salts
P109	(H)	Tetraethyldithiopyrophosphate
P110	(H)	Tetraethyl lead
P111	(H)	Tetraethyl pyrophosphate
P112	(R)	Tetranitromethane
P113	(H)	Thallic oxide
P114	(H)	Thallium(I) selenite
P115	(H)	Thallium(I) sulfate
P116	(H)	Thiosemicarbazide
P118	(H)	Trichloromethanethiol
P119	(H)	Vanadic acid, ammonium salt
P120	(H)	Vanadium pentoxide
P121	(H)	Zinc cyanide
P122	(R,T)	Zinc phosphide Zn_3P_2 when present at

Basis for listing or class of hazardous waste:

(I)	Ignitable	Toxicity Characteristic Waste	(E)
(C)	Corrosive	Acute Hazardous Waste	(H)
(R)	Reactive	Toxic Waste	(T)

EPA Hazardous Waste Number:	Hazardous Waste/Constituent:
	concentrations greater than 10%
P123 (H)	Toxaphene
P127	7-Benzofuranol, 2,3-dihydro-2,2-dimethyl,methylcarbamate (Carbofuran)
P128	Phenol, 4-(dimethylamino)-3,5-dimethyl-, methylcarbamate (ester) (Mexacarbate)
P185	1,3-Dithiolane-2-carboxaldehyde, 2,4-dimethyl, O-[(methylamino)carbonyl]oxime (Tirpate)
P188	Benzoic acid, 2-hydroxy, compd. with (3aS-cis)-1,2,3,3a,8,8a-hexahydro- 1,3a,8-trimethylpyrrolo[2,3-b]indol-5-yl methylcarbamate ester (1:1) (Physostigmine salicylate)
P189	Carbamic acid,[(dibutylamino)thio]methyl-, 2,3-dihydro-2,2-dimethyl-7-benzofuranyl ester (Carbosulfan)
P190	Carbamic acid, methyl-, 3-methylphenyl ester (Metolcarb)
P191	Carbamic acid, dimethyl-, 1-[(dimethylamino)carbonyl]-5-methyl-1H-pyrazol-3-yl ester (Dimetilan)
P192	Carbamic acid, dimethyl-, 3-methyl-1-(1-methylethyl)-1H-pyrazol-5-yl ester (Isolan)
P194	Ethanimidothioc acid, 2-(dimethylamino)-N-{[(methylamino)carbonyl]oxy}-2-oxo, methyl ester (Oxamyl)
P196	Manganese, bis(dimethylcarbamodithioato-S,S')-(Manganese dimethyldithiocarbamate)
P197	Methanimidamide, N,N-dimethyl-N'-[2- methyl-4-{[(methylamino)carbonyl]oxy}phenyl]-(Formparanate)
P198	Methanimidamide, N,N-dimethyl-N'-[3-{[(methylamino)carbonyl]oxy}phenyl]-, monohydrochloride (Formetanate hydrochloride)
P199	Phenol, (3,5-dimethyl-4-(methylthio)-, methylcarbamate (Methiocarb)
P201	Phenol, 3-methyl-5-(1-methylethyl)-,

Basis for listing or class of hazardous waste:

(I)	Ignitable	Toxicity Characteristic Waste	(E)
(C)	Corrosive	Acute Hazardous Waste	(H)
(R)	Reactive	Toxic Waste	(T)

EPA Hazardous Waste Number:	Hazardous Waste/Constituent:
	methylcarbamate (Promecarb)
P202	Phenol, 3-(1-methylethyl), methylcarbamate (Hercules AC-5727)
P203	Propanal, 2-methy-2-(methylsulfonyl)-, O-[(methylamino)carbonyl] oxime (Aldicarb sulfone)
P204	Pyrrolo(2,3-b)indol-5-ol, 1,2,3,3a,8,8a-hexahydro-1,3a,8-trimethyl, methylcarbamate (ester), (3aS-cis)- (Physostigmine)
P205	Zinc, bis(dimethylcarbamodithioato-S,S')-, (Ziram)

Basis for listing or class of hazardous waste:

(I)	Ignitable	Toxicity Characteristic Waste	(E)
(C)	Corrosive	Acute Hazardous Waste	(H)
(R)	Reactive	Toxic Waste	(T)

EPA Hazardous Waste Number:		Hazardous Waste/Constituent:

Commercial Chemical Products, Manufacturing Chemical Intermediates, or Off-Specification Commercial Chemical Products:

U001	(I)	Ethanal
U002	(I)	Acetone
U003	(I,T)	Acetonitrile
U004	(T)	Acetophenone
U005	(T)	2-Acetylaminofluorene
U006	(C,R,T)	Acetyl chloride
U007	(T)	Acrylamide
U008	(I)	Acrylic acid
U009	(T)	Acrylonitrile
U010	(T)	Mitomycin C
U011	(T)	Amitrole
U012	(I,T)	Aniline
U014	(T)	Auramine
U015	(T)	Azaserine
U016	(T)	Benz[c]acridine
U017	(T)	Benzal chloride
U018	(T)	Benz[a]anthracene
U019	(I,T)	Benzene
U020	(C,R)	Benzenesulfonyl chloride
U021	(T)	Benzidine
U022	(T)	Benzo[a]pyrene
U023	(C,R,T)	Benzotrichloride
U024	(T)	Dichloromethoxy ethane
U025	(T)	Dichloroethyl ether
U026	(T)	Chlornaphazin
U027	(T)	Dichloroisopropyl ether
U028	(T)	Diethylhexyl phthalate
U029	(T)	Methyl bromide
U030	(T)	Benzene, 1-bromo-4-phenoxy-
U031	(I)	n-Butyl alcohol
U032	(T)	Calcium chromate
U033	(R,T)	Carbon oxyfluoride
U034	(T)	Chloral

Basis for listing or class of hazardous waste:

(I)	Ignitable	Toxicity Characteristic Waste	(E)
(C)	Corrosive	Acute Hazardous Waste	(H)
(R)	Reactive	Toxic Waste	(T)

EPA Hazardous Waste Number:		Hazardous Waste/Constituent:
U035	(T)	Chlorambucil
U036	(T)	Chlordane, alpha & gamma isomers
U037	(T)	Chlorobenzene
U038	(T)	Chlorobenzilate
U039	(T)	p-Chloro-m-cresol
U041	(T)	Epichlorohydrin
U042	(T)	2-Chloroethyl vinyl ether
U043	(T)	Vinyl chloride
U044	(T)	Chloroform
U045	(I,T)	Methyl chloride
U046	(T)	Chloromethyl methyl ether
U047	(T)	beta-Chloronaphthalene
U048	(T)	o-Chlorophenol
U049	(T)	Benzenamine, 4-chloro-2-methyl-, hydrochloride
U050	(T)	Chrysene
U051	(T)	Creosote
U052	(T)	Cresol (Cresylic Acid)
U053	(T)	Crotonaldehyde
U055	(I)	Cumene
U056	(I)	Cyclohexane
U057	(I)	Cyclohexanone
U058	(T)	Chclophosphamide
U059	(T)	Daunomycin
U060	(T)	DDD
U061	(T)	DDT
U062	(T)	Diallate
U063	(T)	Dibenz[a,h]anthracene
U064	(T)	Dibenzo[a,i]pyrene
U066	(T)	1,2-Dibromo-3-chloropropane
U067	(T)	Ethylene dibromide
U068	(T)	Methylene bromide
U069	(T)	Dibutyl phthalate
U070	(T)	o-Dichlorobenzene
U071	(T)	m-Dichlorobenzene
U072	(T)	p-Dichlorobenzene
U073	(T)	3,3'Dichlorobenzidine
U074	(I,T)	1,4-Dichloro-2-butene

Basis for listing or class of hazardous waste:

(I)	Ignitable	Toxicity Characteristic Waste	(E)
(C)	Corrosive	Acute Hazardous Waste	(H)
(R)	Reactive	Toxic Waste	(T)

EPA Hazardous Waste Number:		Hazardous Waste/Constituent:
U075	(T)	Dichlorodifluoromethane
U076	(T)	Ethylidene dichloride
U077	(T)	Ethylene dichloride
U078	(T)	1,1-Dichloroethylene
U079	(T)	1,2-Dichloroethylene
U080	(T)	Methylene chloride
U081	(T)	2,4-Dichlorophenol
U082	(T)	2,6-Dichlorophenol
U083	(T)	Propylene dichloride
U084	(T)	1,3-Dichloropropene
U085	(I,T)	1,2:3,4-Diepoxybutane
U086	(T)	N,N-Diethylhydrazine
U087	(T)	O,O-Diethyl S-methyl dithiophosphate
U088	(T)	Diethyl phthalate
U089	(T)	Diethylstilbesterol
U090	(T)	Dihydrosafrole
U091	(T)	3,3'-Dimethoxybenzidine
U092	(I)	Dimethylamine
U093	(T)	p-Dimethylaminoazobenzene
U094	(T)	7,12-Dimethylbenz[a]anthracene
U095	(T)	3,3'-Dimethylbenzidine
U096	(R)	alpha,alpha-Dimethylbenzylhydroperoxide
U097	(T)	Dimethylcarbamoyl chloride
U098	(T)	1,1-Dimethylhydrazine
U099	(T)	1,2-Dimethylhydrazine
U101	(T)	2,4-Dimethylphenol
U102	(T)	Dimethyl phthalate
U103	(T)	Dimethyl sulfate
U105	(T)	2,4-Dinitrotoluene
U106	(T)	2,6-Dinitrotoluene
U107	(T)	Di-n-octyl phthalate
U108	(T)	1,4-Dioxane
U109	(T)	1,2-Diphenylhydrazine
U110	(I)	Dipropylamine
U111	(T)	Di-n-propylnitrosamine
U112	(I)	Ethyl acetate
U113	(I)	Ethyl acrylate

Basis for listing or class of hazardous waste:

(I)	Ignitable	Toxicity Characteristic Waste	(E)
(C)	Corrosive	Acute Hazardous Waste	(H)
(R)	Reactive	Toxic Waste	(T)

EPA Hazardous Waste Number:		Hazardous Waste/Constituent:
U114	(T)	Ethylenebisdithiocarbamic acid, salts & esters
U115	(I,T)	Ethylene oxide
U116	(T)	Ethylenethiourea
U117	(I)	Ethyl ether
U118	(T)	Ethyl methacrylate
U119	(T)	Ethyl methanseulfonate
U120	(T)	Fluoranthene
U121	(T)	Methane, trichlorofluoro-
U122	(T)	Formaldehyde
U123	(C,T)	Formic acid
U124	(I)	Furan
U125	(I)	Furfural
U126	(T)	Glycidylaldehyde
U127	(T)	Hexachlorobenzene
U128	(T)	Hexachlorobutadiene
U129	(T)	Lindane
U130	(T)	Hexachlorocyclopentadiene
U131	(T)	Hexachloroethane
U132	(T)	Hexachlorophene
U133	(R,T)	Hydrazine
U134	(C,T)	Hydrogen fluoride
U135	(T)	Hydrogen sulfide
U136	(T)	Cacodylic acid
U137	(T)	Indeno[1,2,3-cd]pyrene
U138	(T)	Methyl iodide
U140	(I,T)	Isobutyl alcohol
U141	(T)	Isosafrole
U142	(T)	Kepone
U143	(T)	Lasiocarpine
U144	(T)	Lead acetate
U145	(T)	Lead phosphate
U146	(T)	Lead subacetate
U147	(T)	Maleic anhydride
U148	(T)	Maleic hydrazide
U149	(T)	Malononitrile
U150	(T)	Melphalan
U151	(T)	Mercury

Basis for listing or class of hazardous waste:

(I)	Ignitable	Toxicity Characteristic Waste	(E)
(C)	Corrosive	Acute Hazardous Waste	(H)
(R)	Reactive	Toxic Waste	(T)

EPA Hazardous Waste Number:		Hazardous Waste/Constituent:
U152	(I,T)	Methacrylonitrile
U153	(I,T)	Methanethiol
U154	(I)	Methanol
U155	(T)	Methapyrilene
U156	(I,T)	Methyl chlorocarbonate
U157	(T)	3-Methylcholanthrene
U158	(T)	4,4'-Methylenebis(2-chloroaniline)
U159	(I,T)	Methyl ethyl ketone (MEK)
U160	(R,T)	Methyl ethyl ketone peroxide
U161	(I)	Methyl isobutyl ketone
U162	(I,T)	Methyl methacrylate
U163	(T)	MNNG
U164	(T)	Methylthiouracil
U165	(T)	Naphthalene
U166	(T)	1,4-Naphthoquinone
U167	(T)	1-Naphthalenamine
U168	(T)	2-Naphthalenamine
U169	(I,T)	Nitrobenzene
U170	(T)	p-Nitrophenol
U171	(I,T)	2-Nitropropane
U172	(T)	N-Nitrosodi-n-butylamine
U173	(T)	N-Nitrosodiethanolamine
U174	(T)	N-Nitrosodiethylamine
U176	(T)	N-Nitroso-N-ethylurea
U177	(T)	N-Nitroso-N-methylurea
U178	(T)	N-Nitroso-N-methylurethane
U179	(T)	N-Nitrosopiperidine
U180	(T)	N-Nitrosopyrrolidine
U181	(T)	5-Nitro-o-toluidine
U182	(T)	Paraldehyde
U183	(T)	Pentachlorobenzene
U184	(T)	Pentachloroethane
U185	(T)	Pentachloronitrobenzene (PCNB)
U186	(I)	1,3-Pentadiene
U187	(T)	Phenacetin
U188	(T)	Phenol
U189	(R)	Phosphorous sulfide

Basis for listing or class of hazardous waste:

(I)	Ignitable	Toxicity Characteristic Waste	(E)
(C)	Corrosive	Acute Hazardous Waste	(H)
(R)	Reactive	Toxic Waste	(T)

EPA Hazardous Waste Number:		Hazardous Waste/Constituent:
U190	(T)	Phthalic anhydride
U191	(T)	Pyridine, 2-methyl-
U192	(T)	Pronamide
U193	(T)	1,3-Propane sultone
U194	(I,T)	1-Propanamine
U196	(T)	Pyridine
U197	(T)	p-Benzoquinone
U200	(T)	Reserpine
U201	(T)	Resorcinol
U202	(T)	Saccharin, and salts
U203	(T)	Safrole
U204	(T)	Selenium dioxide
U205	(R,T)	Selenium sulfide
U206	(T)	Streptozotocin
U207	(T)	1,2,4,5-Tetrachlorobenzene
U208	(T)	1,1,1,2-Tetrachloroethane
U209	(T)	1,1,2,2-Tetrachloroethane
U210	(T)	Tetrachloroethylene
U211	(T)	Carbon tetrachloride
U213	(I)	Tetrahydrofuran
U214	(T)	Thallium(I) acetate
U215	(T)	Thallium(I) carbonate
U216	(T)	Thallium(I) chloride
U217	(T)	Thallium(I) nitrate
U218	(T)	Thioacetamide
U219	(T)	Thiourea
U220	(T)	Toluene
U221	(T)	Toluenediamine
U222	(T)	o-Toluidine hydrochloride
U223	(R,T)	Toluene diisocyanate
U225	(T)	Bromoform
U226	(T)	Methyl chloroform
U227	(T)	1,1,2-Trichloroethane
U228	(T)	Trichloroethylene
U234	(R,T)	1,3,5-Trinitrobenzene
U235	(T)	Tris(2,3-dibromopropyl) phosphate
U236	(T)	Trypan blue

Basis for listing or class of hazardous waste:

(I) Ignitable
(C) Corrosive
(R) Reactive

Toxicity Characteristic Waste (E)
Acute Hazardous Waste (H)
Toxic Waste (T)

EPA Hazardous Waste Number:	Hazardous Waste/Constituent:
U237 (T)	Uracil mustard
U238 (T)	Ethyl carbamate (urethane)
U239 (I)	Xylene
U240 (T)	2,4-D, salts and esters
U243 (T)	Hexachloropropene
U244 (T)	Thiram
U246 (T)	Cyanogen bromide (CN)Br
U247 (T)	Methoxychlor
U248 (T)	Warfarin, and salts, when present at concentrations of 0.3% or less.
U249 (T)	Zinc phosphide, Zn_3P_2 when present at concentrations of 10% or less.
U271	Carbamic acid, {1-[(butylamino)carbonyl]-1H-benzamidazol-2-yl}-, methyl ester (Benomyl)
U277	Carbamodithioic acid, diethyl-,2-chloro-2-propenyl esters (Sulfallate)
U278	1,3-Benzodioxol-4-ol, 2,2-dimethyl-, methyl carbamate (Bendiocarb)
U279	1-Naphthalenol, methylcarbamate (Carbaryl)
U280	Carbamic acid, (3-chlorophenyl)-, 4-chloro-2-butynyl ester (Barban)
U328 (T)	o-Toluidine
U353 (T)	p-Toluidine
U359 (T)	Ethanol, 2-ethoxy-
U364	1,3-benzodioxol-4-ol, 2,2-dimethyl-, (Bendiocarb phenol)
U365	1H-Azepine-1-carbothioic acid, hexahydro-, S-ethyl ether (Molinate)
U366	2H-1,3,5-thiadiazine-2-thione, tetrahydro-3,5-dimethyl- (Dazomet)
U367	7-Benzofuranol, 2,3-dihydro-2,2-dimethyl- (Carbofuran phenol)
U372	Carbamic acid, 1H-benzomidazol-2-yl, methyl ester (Carbendazim)
U373	Carbamic acid, phenyl-, 1-methylethyl ether (Propham)
U375	Carbamic acid, butyl-, 3-idio-2-propynyl ester

Basis for listing or class of hazardous waste:

(I)	Ignitable	Toxicity Characteristic Waste	(E)
(C)	Corrosive	Acute Hazardous Waste	(H)
(R)	Reactive	Toxic Waste	(T)

EPA Hazardous Waste Number:	Hazardous Waste/Constituent:
	(Troysan Plyphase)
U376	Carbamodithioic acid, dimethyl-, tetraanhydrosulfide with orthothioselenious acid (Seleneum dimethyldithiocarbamate)
U377	Carbamodithioic acid, methyl, -monopotassium salt (Potassium n-methyldithiocarbamate)
U378	Carbamodithioic acid, (hydroxymethyl)methyl-, monopotassium salt (Busan 40)
U379	Carbamodithioic acid, dibutyl, sodium salt (Sodium dibutyldithiocarbamate)
U381	Carbamodithioic acid, diethyl-, sodium salt (Sodium diethyldithiocarbamate)
U382	Carbamodithioic acid, dimethyl-, sidium salt (Dibam)
U383	Carbamodithioic acid, dimethyl, porassium salt (Potassium dimethyl dithiocarbamate) (Busan 85)
U384	Carbamodithioic acid, methyl-, monosodium salt (Metam Sodium)
U385	Carbamodithioic acid, dipropyl-, S-propyl ester (Vemolate)
U386	Carbamodithioic acid, cyclohexylethyl, S-ethyl ester (Cycloate)
U387	Carbamodithioic acid, dipropyl-, S-(phenylmethyl) ester (Prosulfocarb)
U389	Carbamodithioic acid, bis(1-methylethyl)-, S-(2,3,3-trichloro-2-propenyl) ester (Triallate)
U390	Carbamodithioic acid, dipropyl-, S-ethyl ester (EPTC)
U391	Carbamodithioic acid, butylethyl-, E-propyl ester (Pebulate)
U392	Carbamodithioic acid, bis(2-methylpropyl)-, S-ethyl ester (Butylate)
U393	Copper, tris(dimethylcarbamodithioato- S,S')-, (Copper dimethyldithiocarbamate)
U394	Ethanimidothioic acid, 2-(dimethylamino)-N-hydroxy-2-oxo-, methyl ether (A2213)
U395	Ethanol, 2,2'-oxybis-, dicarbamate (Reactacrease

Basis for listing or class of hazardous waste:

(I)	Ignitable	Toxicity Characteristic Waste	(E)
(C)	Corrosive	Acute Hazardous Waste	(H)
(R)	Reactive	Toxic Waste	(T)

EPA Hazardous Waste Number:	Hazardous Waste/Constituent:
	4-DEG)
U396	Iron, tris(dimethyl carbamodithioato-S,S')-(Ferbam)
U400	Piperidine, 1,1'-(tetrathiodicarbonothioyl)-bis-(Sulfads)
U401	Bis(dimethyl thiocarbamoyl) sulfide (Tetramethylthiuram monosulfide)
U402	Thioperoxydicarbonic diamide, tetrabutyl (Butyl Tuads)
U403	Thioperoxydicarbonic diamide, tetraethyl (Disulfram)
U404	Ethanamine, N,N-diethyl- (Triethylamine)
U407	Zinc, bis(diethylcarbamodithioato-S,S') (Ethyl Ziram)
U409	Carbamic acid, [1,2-phenylenebis(iminocarbonothioyl)]bis-, dimethyl ester (Thiophanate-methyl)
U410	Ethanomidothoic acid, N,N'-{thiobis[(methylimino)carbonyloxy]}bis-, dimethyl ester (Thiodicarb)
U411	Phenol, 2-(1-methylethoxy)-, methylcarbamate (Propoxur)

Basis for listing or class of hazardous waste:

(I) Ignitable
(C) Corrosive
(R) Reactive
Toxicity Characteristic Waste (E)
Acute Hazardous Waste (H)
Toxic Waste (T)

Other Wastes

- Solid wastes as defined by 40 CFR 261.2
- Waste from a Hazardous Waste Facility or Site, or waste resulting from activities under the Comprehensive Environmental Response, Compensation, and Liability Act (CERCLA) including but not limited to personnel protective equipment, discarded containers of laboratory chemicals (lab packs), lab equipment, clothing, debris from spills or cleanup and floor sweepings.

Basis for listing or class of hazardous waste:

(I)	Ignitable	Toxicity Characteristic Waste	(E)
(C)	Corrosive	Acute Hazardous Waste	(H)
(R)	Reactive	Toxic Waste	(T)

Attachment C-C

Analytical Methods

February 18, 1992

Attachment C-C

Table of Contents:

1. References for Standard Test Methods and Procedures

2. Examples of Standard Test Methods and Procedures and Clean Harbors Kansas, LLC Analytical Procedures

3. Clean Harbors Kansas, LLC Analytical Procedures

Normality	(USPCI-1)
Water Reactivity Screen	(USPCI-2)
Solids Screen	(USPCI-3)
Reactive Cyanides Screen	(USPCI-4)
Reactive Sulfides Screen	(USPCI-4)
Explosivity Meter Vapor Test	(USPCI-5)
Oxidizer Screen	(USPCI-6)
Radioactivity Screen	(USPCI-7)
Fixation Requirement	(USPCI-8)
Reducer Screen	(USPCI-10)
Extraction for Solids	(USPCI-11)
Radiant Heat Ignition Test	(USPCI-21)
Compatability Evaluation	(USPCI-25)

1. Clean Harbors Kansas, LLC Methods

Explosivity Screen	(HRIW-1)
HOC Screen	(HRIW-2)
Ignitability of Solids	(HRIW-3)

Standard Method References

The standard methods referenced on the following pages are detailed in the publications provided below.

SW-846	"Test Methods for Evaluating Solid Waste"; SW-846; U.S. Environmental Protection Agency, Office of Water and Waste Management, Washington, D.C. 20406; in effect as of January 31, 1992.
APHA	"Standard Methods for the Examination of Water and Waste Water", 16th edition, American Public Health Association, 1985.
ASTM	"Annual Book of ASTM Standards", American Society for Testing Materials, 1916 Race Street, Philadelphia, Pennsylvania 19103.
EPA-600/4-79-020	"Methods for Chemical Analysis of Water and Wastes", EPA-600/4-79-020; U.S. Environmental Protection Agency, Environmental Monitoring and Support Laboratory, Cincinnati, Ohio 45268, March 1979.
40 CFR	40 Code of Federal Regulations, Parts 260-268 (1991 edition).

Examples of Standard Test Methods and Procedures
and LES Analytical Procedures [6 pages]

Parameter	Method	Reference
Sample Work Up Techniques		
Inorganic Techniques		
Acid digestion procedure for flame atomic absorption spectroscopy or inductively coupled plasma spectroscopy	3005	SW-846
Acid digestion procedure for flame atomic absorption spectroscopy or inductively coupled plasma spectroscopy	3010	SW-846
Acid digestion procedure for furnace atomic absorption spectroscopy	3020	SW-846
Acid digestion of oils, greases, or waxes	3030	SW-846
Dissolution procedure for oils, greases, wax	3040	SW-846
Acid digestion of sludges	3050	SW-846
Alkaline digestion	3060	SW-846
Microwave assisted acid digestions from USEPA Contract Laboratory Program Statement of Work for Inorganics Analysis		EPA-CLP
Organic Techniques		
Extraction Procedure for Oily Wastes	1330	SW-846
Organic Extraction and Sample Preparation	3500	SW-846
Waste Dilution	3580	SW-846
Separatory funnel liquid-liquid extraction	3510	SW-846
Continuous liquid-liquid extraction	3520	SW-846
Acid-base cleanup extraction	3530	SW-846
Soxhlet extraction	3540	SW-846
Sonication extraction	3550	SW-846
Purge and Trap	5030	SW-846
Hexadecane Extraction and Screening of purgeable organics	3820	SW-846

Inorganic Analytical Methods		
Inductively coupled plasma atomic emission spectroscopy	6010	SW-846
Antimony		
Atomic absorption, direct aspiration method	7040	SW-846
Atomic absorption, furnace method	7041	SW-846
Arsenic		
Atomic absorption, furnace method	7060	SW-846
Atomic absorption, gaseous hydride method	7061	SW-846
Barium		
Atomic absorption, direct aspiration method	7080	SW-846
Atomic absorption, furnace method	7081	SW-846
Beryllium		
Atomic absorption, direct aspiration method	7090	SW-846
Atomic absorption, furnace method	7091	SW-846
Cadmium		
Atomic absorption, direct aspiration method	7130	SW-846
Atomic absorption, furnace method	7131	SW-846
Chromium		
Atomic absorption, direct aspiration method	7190	SW-846
Atomic absorption, furnace method	7191	SW-846
Hexavalent chromium: co-precipitation	7195	SW-846
Hexavalent chromium: colorimetric	7196	SW-846
Hexavalent chromium: chelation-extraction	7197	SW-846
Hexavalent chromium: diff. phase polarography	7198	SW-846
Copper		
Atomic absorption, direct aspiration method	7210	SW-846
Atomic absorption, furnace method	7211	SW-846
Lead		
Atomic absorption, direct aspiration method	7420	SW-846
Atomic absorption, furnace method	7421	SW-846

Mercury		
In liquid waste (manual cold-vapor technique)	7470	SW-846
In solid or semisolid waste (manual cold-vapor technique)	7471	SW-846
Nickel		
Atomic absorption, direct aspiration method	7520	SW-846
Atomic absorption, furnace method	7521	SW-846
Osmium		
Atomic absorption, direct aspiration method	7550	SW-846
Atomic absorption, furnace method	7551	SW-846
Selenium		
Atomic absorption, furnace method	7740	SW-846
Atomic absorption, gaseous hydride method	7741	SW-846
Silver		
Atomic absorption, direct aspiration method	7760	SW-846
Atomic absorption, furnace method	7761	SW-846
Thallium		
Atomic absorption, direct aspiration method	7840	SW-846
Atomic absorption, furnace method	7841	SW-846
Vanadium		
Atomic absorption, direct aspiration method	7910	SW-846
Atomic absorption, furnace method	7911	SW-846
Zinc		
Atomic absorption, direct aspiration method	7950	SW-846
Atomic absorption, furnace method	7951	SW-846

Organic Analytical Methods		
Gas Chromatographic Methods		
Halogenated Volatile Organics	8010	SW-846
Nonhalogenated Volatile Organics	8015	SW-846
Aromatic Volatile Organics	8020	SW-846
Acrolein, Acrylonitrile, Acetonitrile	8030	SW-846
Phenols	8040	SW-846
Phthalate Esters	8060	SW-846
Organochloride Pesticides and PCBs	8080	SW-846
Nitroaromatics and Cyclic Ketones	8090	SW-846
Polynuclear Aromatic Hydrocarbons	8100	SW-846
Chlorinated Hydrocarbons	8120	SW-846
Organophosphate Pesticides	8140	SW-846
Chlorinated Herbicides	8150	SW-846
Gas Chromatographic/Mass Spectroscopy Methods for Organics		
Volatile Organics	8240	SW-846
Volatile Organics	8260	SW-846
Semivolatile Organics:		
Packed Column Technique	8250	SW-846
Capillary Column Technique	8270	SW-846
Polychlorinated Dibenzo-P-Dioxins and Polychlorinated Dibenzofurans	8280	SW-846

Miscellaneous Analytical Methods		
Acidity	402	APHA
Alkalinity	403	APHA
Percent Ash	D482	ASTM
Bulk Density	D1429	ASTM
Chlorine	D808	ASTM
Compatibility Test for Wastes and Membrane Liners	9090	SW-846
Corrosivity towards steel	1110	SW-846
Releasable Cyanides	7.3.3.2	SW-846
Releasable Sulfides	7.3.4.2	SW-846
Flash Point (closed cup)	D93	ASTM
Flash Point (open cup)	D92	ASTM
Heat Release	D240	ASTM
Ignitability (Pensky-Martens closed-cup method)	1010	SW-846
Ignitability (Setaflash closed-cup method)	1020	SW-846
NH_3-Nitrogen	350.3	EPA-600/ 4-79-020
NH_3-Nitrogen	417	APHA
Nitrate (Ion Chromatography)	300.1	EPA-600/ 4-79-020
Nitrate (Colormetric)	9200	SW-846
Nitrate-Nitrogen	418	APHA
Nitrate-Nitrogen	352.1	EPA-600/ 4-79-020
Total Recoverable Oil & Grease	9070	SW-846
Oil & Grease Extraction Method for Sludge Samples	9071	SW-846
Oil & Grease	D4281	ASTM
Oil & Grease	503	APHA
Total Organic Carbon (TOC)	9060	SW-846
Total Organic Halides (TOX)	9020	SW-846
Paint Filter Liquids Test (Free Liquids Test)	9095	SW-846
Soil pH	9045	SW-846
Phosphorous	365.4	EPA-600/ 4-79-020
Phosphorous	424	APHA
Total Solids Dried at 103°C - 105°C	160.3	EPA-600/ 4-79-020
Total Solids Dried at 103°C - 105°C	209A	APHA
Total Suspended Solids (Filterable Residue)	209C	APHA
Fixed & Volatile Solids (Non-filterable Residue) 2-209D	209D	APHA
Specific Gravity	D1298	ASTM
Total Sulfur	D129-64	ASTM
Total Sulfides	9030	SW-846
TCLP	Appendix I	40 CFR 268
EP Toxicity	Appendix II	40 CFR 261

Viscosity	D445	ASTM
Water Content (Karl Fischer Method)	D1744	ASTM
Water Content (Centrifuge Method)	D1796	ASTM
Normality	USPCI-1	CHK WAP
Water Reactivity Screen	USPCI-2	CHK WAP
Solids Screen	USPCI-3	CHK WAP
Reactive Cyanides Screen	USPCI-4	CHK WAP
Reactive Sulfides Screen	USPCI-4	CHK WAP
Explosivity Screen	HRW-1	CHK WAP
Explosivity Meter Vapor Test	USPCI-5	CHK WAP
Oxidizer Screen	USPCI-6	CHK WAP
Radioactivity Screen	USPCI-7	CHK WAP
Fixation Requirement	USPCI-8	CHK WAP
Reducer Screen	USPCI-10	CHK WAP
Extraction for Solids	USPCI-11	CHK WAP
Radiant Heat Ignition Test	USPCI-21	CHK WAP
Ignitability of Solids	HRIW-3	CHK WAP
Compatability Evaluation	USPCI-25	CHK WAP
HOC Screen	HRIW-2	CHK WAP

Clean Harbors Kansas, LLC

Analytical Procedures

Clean Harbors Kansas, LLC **ANALYTICAL PROCEDURE 1**

(USPCI - 1)

NORMALITY

February 18, 1992

Clean Harbors Kansas, LLC **ANALYTICAL PROCEDURE 1**

(USPCI - 1)

NORMALITY

(Acidity or Alkalinity)

1.0 SCOPE AND APPLICATION

1.1 This method is for determining normality (acidity or alkalinity) of hazardous waste samples that are acidic or caustic liquids.

1.2 It should be noted that the data generated from normality measurements are used for two purposes. One is as a part of the incoming load (fingerprint) procedure to ensure that pre-shipment samples of waste streams are representative of the loads actually sent. A difference of +/-1.25 normality units is considered a discrepancy. The other purpose is to give an indication of the volumes of acidic and caustic waste streams that must be mixed together for neutralization before disposal. Neither of these purposes require accurate values for low normality samples. Therefore, the procedure which is used and given here is one that gives sufficient accuracy for high normality samples.

2.0 SUMMARY OF METHOD

2.1 The liquid waste is titrated with a titrant that is the opposite pH (e.g. titrate an acidic waste with a caustic titrant). Solids are added to a nominal volume of deionized water (DIW) for titration, if desired. The normality is calculated by using the amounts of the sample and titrant and the known normality of the titrant. The end point of the titration is determined by a calibrated pH meter.

3.0 INTERFERENCES

3.1 Response times for glass pH electrodes may be slowed by oil films on the electrode.

4.0 SAFETY

4.1 Wear appropriate gloves and safety glasses when handling acids and caustics.

4.2 Prevent spills and splashes. Wash areas (if spill occurs) thoroughly with water.

4.3 If sample has extremely high normality, splattering may occur when titrating. Therefore, analysis should be performed in the hood.

4.4 Do not breath vapors; keep samples in the hood.

5.0 APPARATUS AND EQUIPMENT

5.1 Buret - Pyrex or Kimax, 25 ml, with divisions of 0.1 ml. or equivalent. One each for acid and base titrants.

5.2 10 ml and 50 ml disposable polystyrene beakers.

5.3 pH meter

6.0 REAGENTS

6.1 pH buffers: Baker Analyzed 5657-1 (pH 4), 5655-1 (pH 10), 5656-1 (pH 7), or equivalents.

6.2 Concentrated hydrochloric acid, 12 N: Baker Analyzed Reagent 9535-3, or equivalent.

6.3 Hydrochloric acid, 3 N: Add slowly, while stirring, 258 ml of HCL acid (6.2) and dilute to 1 liter.

6.4 Sodium Hydroxide, 3 N: Dissolve 120 g of NaOH (6.5) in 800 ml of Type I water while stirring. Dilute to 1 liter.

6.5 Sodium Hydroxide: Mallinckrodt AR# 7708-5, or equivalent.

7.0 SAMPLE HANDLING AND PRESERVATION

7.1 Handle sample with extreme caution; wearing gloves and glasses.

7.2 No preservation required.

7.3 If sample fumes, store in refrigerator at 4°C.

8.0 pH - METER CALIBRATION AND STANDARDIZATION

8.1 Make up pH 4 and pH 7 buffer solutions by emptying the complete sachet contents into beakers and dissolving in the stated volume of distilled water. Pre-mixed and certified buffers may also be used.

8.2 Calibrate pH meter according to manufacturer's instructions. Record calibration settings in instrument log.

9.0 QUALITY CONTROL

9.1 Duplicates. For preacceptance samples, at least one duplicate must be analyzed per sample set or 10% of total samples. For incoming load samples, at least one duplicate analysis set must be analyzed per shift.

9.2 The normality of the titrants are checked against a primary standard on a regular basis.

9.3 Control Charts

9.3.1 Precision control charts for monitoring of relative percent difference of duplicate analysis are maintained.

9.3.2 Accuracy control charts for the normality checks are maintained.

10.0 PROCEDURE

10.1 Use a 10 ml disposable beaker to measure 10 ml of a liquid sample into a 50 ml disposable beaker. If the sample is solid, add 1.0 gm to 10 ml of DIW.

10.2 Stir gently with the calibrated and rinsed pH probe. Record the initial pH.

10.3 For samples with pH greater than 10.5 or less than 4.5 a titration with 3 N acid or base titrant, respectively, is performed. Titrate slowly with continuous stirring until the pH reaches 7.0.

10.4 Read and record the volume of titrant used.

10.5 Samples of high normality can use a smaller sample aliquot as required.

11.0 CALCULATIONS

11.1 Normality of sample =

$$\frac{\text{Normality of Titrant x Volume of Titrant (mL)}}{\text{Volume of Sample (mL or gm)}}$$

11.2 Duplicate calculation:

$$\% \text{ Difference} = \frac{(D_1 - D_2) \times 200}{D_1 + D_2}$$

where: D_1 = first sample value
D_2 = second sample value

12.0 DATA FLAGGING AND REMEDIAL ACTION

12.1 Data will be flagged by the analyst if data generated creates an "out-of-control" situation on the Precision or Accuracy Control Chart.

12.2 Remedial action

12.2.1 When data is flagged, the following areas are reviewed by the analyst and/or supervisor:

12.2.1.1 Calibration and standardization.

12.2.1.2 Analysis trends as indicated by control charts.

12.3 When a problem is located, sample analysis is repeated.

13.0 REFERENCES

Chemistry, 2nd Edition, Yoder, Claude H., Snydam, Fred H., Snavely, Harcourt Brace Jovanovich, Inc., 1980, 1975.

Standard Methods for the Examination of Water & Wastewater, 16th Edition, American Public Health Association, American Water Works Association, Water Polution Control Federation, 1985.

Clean Harbors Kansas, LLC ANALYTICAL PROCEDURE 2

(USPCI - 2)

WATER REACTIVITY SCREEN

April 13, 1995

Clean Harbors Kansas, LLC ANALYTICAL PROCEDURE 2

(USPCI - 2)

WATER REACTIVITY SCREEN

1.0 SCOPE AND APPLICATION

1.1 This method is used to screen materials for violent reactions with water.

2.0 SUMMARY OF METHOD

2.1 Sample is slowly added to water until a 50/50 volume/volume mixture is obtained. The mixture is observed to detect heating (more than a 15°C temperature rise) or turbulent gas evolution (more than 10% of the mixture volume).

3.0 SAFETY

3.1 Always add sample slowly to water, not water to sample.

3.2 Wear appropriate gloves and safety glasses.

3.3 Perform the mixing in a hood to prevent gases evolved from entering the laboratory.

4.0 PROCEDURE

4.1 Pour 25 ml of water into a disposable 50 ml beaker. Measure the initial water temperature. Slowly add sample until the beaker reaches the 50 ml level.

4.2 If the mixture warms significantly, use a thermometer to check temperature. If it is more than 15°C above the initial water sample temperature the sample is considered to be water reactive.

4.3 If bubbles or gas is formed causing turbulence, the sample is also considered to be water reactive due to gas evolution.

4.4 If sample is water reactive due to temperature rise and the sample has a large enough acid or base normality to account for temperature rise due to acid or base dilution, the sample is noted to be water reactive due to acid or base

dilution.

4.5 If the reaction is questionable, the amount of sample is scaled up with 10 times the amount of water and re-tested.

5.0 QUALITY CONTROL

5.1 Duplicates. For preacceptance samples, at least one duplicate must be analyzed per sample set or 10% of total samples. For incoming load samples, at least one duplicate analysis set must be analyzed per shift.

5.2 Because this test yields a "yes" or "no" answer, regular quality control charts will not be kept. All discrepancies between duplicate samples must be explained and noted.

Clean Harbors Kansas, LLC ANALYTICAL PROCEDURE 3

(USPCI - 3)

SOLIDS SCREEN

February 18, 1992

Clean Harbors Kansas, LLC ANALYTICAL PROCEDURE 3

(USPCI - 3)

SOLIDS SCREEN

1.0 SCOPE AND APPLICATION

This is a rapid and accurate method for determining the total solids content of liquids, sludges and solid samples by drying to maximum weight loss at approximately 105°C.

2.0 SUMMARY OF METHOD

An approximate 10 grams of sample are accurately weighed and dried on a moisture balance. Weights before and after drying are compared to calculate % solids.

3.0 INTERFERENCES

Underheating and/or inadequate drying time will not remove all components normally volatilized at 105°C. Adequate heater and timer settings are developed for each type of sample to prevent these interferences.

4.0 SAFETY

4.1 This method should not be used with explosives or ignition could result.

4.2 Appropriate gloves and safety glasses should be worn while handling samples.

4.3 This method should be performed in the hood to prevent volatile compounds from entering the laboratory atmosphere.

5.0 APPARATUS AND EQUIPMENT

Ohaus Moisture Determination Balance Model 6010 with aluminum sample pans.

6.0 QUALITY CONTROL

6.1 Duplicates. For preacceptance samples, at least one duplicate must be analyzed per sample set or 10% of total samples. For

incoming load samples, at least one duplicate

analysis set must be analyzed per shift.

6.2 Control Samples are run on a regular basis.

6.3 Quality Control Charts are kept for monitoring precision (duplicates), and accuracy (control samples).

7.0 PROCEDURE

7.1 Approximately 10 grams of well mixed sample are accurately weighed onto a tared aluminum sample pan on the moisture balance. This weight is the initial weight.

7.2 The temperature setting is checked weekly when the control sample is run. The setting will be recorded on the control chart log. This will be the setting used each week. Set the timer setting at 10 minutes. Check sample at end of time, if free liquids are still present heat an additional 5 minutes.

7.3 % total solids is calculated using the formula:

$$\% \text{ total solids} = \frac{\text{Final Weight} \times 100}{\text{Initial Weight}}$$

8.0 REFERENCES

Instructions for Ohaus Moisture Determination Balance Model 6010, 1982.

Clean Harbors Kansas, LLC ANALYTICAL PROCEDURE 4

(USPCI - 4)

REACTIVE CYANIDES AND REACTIVE SULFIDES SCREEN

April 13, 1995

Clean Harbors Kansas, LLC ANALYTICAL PROCEDURE 4

(USPCI - 4)

REACTIVE CYANIDES AND REACTIVE SULFIDES SCREEN

1.0 SCOPE AND APPLICATION

This method provides a rapid qualitative test to determine the potential for samples to generate HCN or H_2S upon acidification.

2.0 SUMMARY OF METHOD

A small amount of sample is acidified to pH $\leq$ 2 using nitric acid and the atmosphere above the sample is tested using Drager detector tubes for hydrogen cyanide and hydrogen sulfide.

3.0 SAFETY

3.1 Wear appropriate gloves and safety glasses.

3.2 This test must be performed in a hood to prevent poisonous HCN and/or H_2S from escaping into the lab atmosphere.

4.0 INTERFERENCES

According to the Drager tube handbook there are no interferences that prevent sensing of HCN, however it has been documented from time to time that unknown substances will cause the tube to turn an orange rather than the tell-tale blood red. Also, the white from part of the tube will turn black in the presence of H_2S. Sulphur dioxide may increase the measured concentration value of H_2S, but will not prevent H_2S from being detected.

5.0 PROCEDURE

5.1 Approximately 25 ml of sample is placed in a disposable 50 ml beaker and acidified with 3 normal nitric acid until the pH is 2.0. Samples with initial pH values at or below 2.0 need not be acidified further.

5.2 While the sample is being acidified, the atmosphere directly

above the sample is tested using a Drager gas detector.

Sample tube Hydrogen Cyanide 2/a is used for HCN detection and sample tube Hydrogen Sulfide 100/a is used for H_2S detection. The HCN tube needs five pumps; the Sulfide tube one.

5.3 If appropriate, additional analysis will be performed using either EPA Method SW-846-9010 for cyanide or EPA Method SW-846-9030 for sulfides.

6.0 QUALITY CONTROL

6.1 Duplicate samples are run at least once every set of 10 pre-acceptance samples.

6.2 Discrepancies (positive vs. negative results) between duplicate samples must be explained.

Clean Harbors Kansas, LLC ANALYTICAL PROCEDURE 5

(USPCI - 5)

EXPLOSIVITY METER VAPOR TEST (TLV SNIFF)

February 18, 1992

Clean Harbors Kansas, LLC ANALYTICAL PROCEDURE 5

(USPCI - 5)

EXPLOSIVITY METER VAPOR TEST (TLV SNIFF)

1.0 SCOPE AND APPLICATION

The TLV Sniffer is an extremely sensitive combustible gas and vapor sensing instrument; equipped with an audible alarm that can be set to sound at any desired level of gas concentration. The TLV is also useful for locating gas leaks. Another function is continuous self monitoring.

2.0 SUMMARY OF METHOD

To detect and measure concentrations of combustible gas in the air, the TLV Sniffer catalytically oxidizes gas in a pumped in sample of air by means of a catalyst-coated resistance element. The resistance of this element changes with changes in temperature that are proportional to the amount of oxidized gas, thereby altering the electrical balance of the catalytic element as compared to the resistance of a reference element. Both the catalyst-coated ("active") element and the reference element are incorporated in a Wheatstone Bridge circuit in such a way as to produce an electrical output proportional to their differences in resistance. Since any changes in air sample temperature and humidity affect both active and reference elements equally the electrical signal output is proportional to the concentrations of combustible gas or vapor in the sample of air (expressed in volumetric terms as ppm). However, sudden changes in humidity may affect the zero reading on the X 1 range. The instrument, therefore, should be zeroed at the sam R.H. prevailing during use.

3.0 INTERFERENCES

3.1 Improper calibration of instrument or setting meter zero in the presence of impure air will cause inaccurate readings.

3.2 Wisps of cigarette smoke, fumes from autos, and subtle air contaminants from other sources may affect zero setting.

4.0 SAFETY

If high volumes of gas are detected or suspected, a respirator should be worn. No flames or sparks should ever be present.

5.0 APPARATUS AND EQUIPMENT

5.1 TLV Sniffer - Bacharach by United Technologies, or equivalent.

5.2 Gas Calibration Kit - Bacharach, Code 51-7199, or equivalent.

6.0 REAGENTS

None

7.0 SAMPLE HANDLING AND PRESERVATION

Keep sample container tightly sealed. **DO NOT** open until starting analysis. If highly volatile, refrigerate sample at 4 degrees Celsius.

8.0 CALIBRATION AND STANDARDIZATION

8.1 Battery test:

Turn MODE SELECTOR knob from OFF position to BATT TEST position. Meter pointer should come to rest in BATTERY GOOD range of meter scale. (Both a meter reading below BATTERY GOOD range and an audible signal warn of batteries too weak to sustain normal operation).

8.2 Setting meter pointer to zero:

8.2.1 Attach air sampling probe connector to instrument intake on left side of case by pulling back spring collar of connector, pressing connector over intake, and releasing spring collar.

8.2.2 Place TLV Sniffer in position in which meter indications will be read (usually in meter up position).

NOTE: Heat distribution from active and reference filaments of the detector sensor changes from vertical

to horizontal position. The resulting change in electrical balance between elements causes a shift in pointer zero from one position to the other.

8.2.3 Set MODE SELECTOR switch to ppm x 100 and operate instrument for 10 minutes to allow circuits to stabilize.

8.2.4 In fresh air, set ZERO ADJUST knob at midpoint (five full turns from either extreme position). If fresh air is not available, use Bacharach Kit 51-7199 to apply known pure air to the Sniffer intake (instructions in kit).

8.2.5 Turn coarse adjustment screw, located under ZERO ADJUST knob, to move meter pointer to zero on the meter scale.

8.2.6 Turn MODE SELECTOR to ppm x 10 position and turn AERO ADJUST knob to set pointer to meter zero.

8.2.7 Turn MODE SELECTOR to ppm x 1 position and turn ZERO ADJUST knob to set pointer to zero.

NOTE: The TLV Sniffer is extremely sensitive in the ppm x 1 range. CO_2 from breath too close to the intake, cigarette smoke, auto fumes, etc., can interfere with accurate setting of the pointer to meter zero.

8.3 Setting meter pointer deflection (gain calibration).

To insure proper operation and to check calibration, it is necessary to periodically check the instrument against a known standard blend of calibration gas.

The Bacharach Code 51-7199 gas calibration kit and optionally available Code 51-1120 rectified gas cylinder containing 500 ppm hexane in air are readily available to meet this requirement.

Connect the gas transfer assembly, making certain all connections are air tight. Use the retaining clips (2 each) to mount Flowmeter (06-6163) to its mounting bracket (51-1201). Make certain to connect rubber tubing at the base inlet connection on the flowmeter, then to the barbed fitting on the regulator and to the quick connect fitting previously installed on the TLV sample inlet (inlet

fitting). Turn regulator valve (03-4318) fully counterclockwise (close position) before attempting to screw regulator into calibration gas tank. This test is to be performed in a clean, fresh air (combustible free) environment. If this is not possible, substitute Code 51-7131 zero calibration gas for the Code 51-1120 cylinder of hexane-air mixture.

Connect the gas transfer assembly at the TLV sample in (inlet) fitting.

Open the regulator valve (clockwise) and adjust for flowmeter indication of (1) cfh to ensure adequate pump flow.

Remove Code 51-7131 zero calibration gas and substitute the Code 51-1120 cylinder of hexane-air mixture before proceeding with Step 6.

To calibrate the instrument in fresh air (combustible free) environment, proceed as follows:

8.3.1 Remove case cover for access to internal adjustments and temporarily break gas transfer assembly connection at the TLV Sample-In (inlet) fitting.

8.3.2 Turn FINE ZERO ADJUST (pot) full clockwise and then five turns counterclockwise to mid-range. Then turn COARSE ADJUST (pot) full clockwise and ten turns counterclockwise to mid-range.

8.3.3 Turn MODE SELECTOR to BATT TEST position. The meter pointer must indicate within BATTERY GOOD range, if not recharge.

Connect a Voltmeter between TP-3 (+) and ground (-), check for 6 VDC. If not, adjust for 6 VDC +/- 0.01 VDC.

8.3.4 After allowing for five minute warm up, turn MODE SELECTOR switch to ppm x 100 position and adjust R-13 for meter pointer indication of scale zero.

8.3.5 Turn MODE SELECTOR switch to ppm x 10 position and adjust COARSE ADJUST or meter pointer indication of scale zero. Readjust per steps 4 and 5 until meter pointer indicates a relatively constant scale zero when

MODE SELECTOR is switched between ppm x 100 range.

8.3.6 Turn MODE SELECTOR switch to ppm x 10 position. Reconnect gas transfer assembly to TLV sample inlet fitting. Open regulator valve (clockwise) and adjust for flowmeter indications of (1) cfh to ensure adequate pump flow. Allow one minute for meter pointer to achieve maximum indication, adjust R-3 the x10 span adjuster until meter pointer indicates mid-scale (50) or 500 ppm. Remove gas, close regulator valve (fully CCW) and allow about two minutes for meter pointer to return to zero.

8.3.7 Turn MODE SELECT switch to ppm x 10 position. Then turn the FINE ZERO ADJUST until meter pointer indicates full scale 1000 ppm. Turn MODE SELECT switch to ppm x 100 position and adjust R-4 the x 100 span adjuster until meter pointer indicates scale zero.

8.3.8 Turn MODE SELECT switch to ppm x 10 position, then turn FINE ZERO ADJUST until meter pointer indicates 10 in the scale or 100 ppm.

8.3.9 Turn MODE SELECT switch to ppm x 1 position and adjust the x 1 span adjuster until meter pointer indicates 100 (full scale) or 100 ppm.

8.3.10 Turn FINE ZERO ADJUST until meter pointer indicates scale zero, the TLV is now calibrated and ready for use on the low range 0-100 ppm as a gas leak detector.

8.4 Resetting alarm response. If factory set alarm response at midpoint of the meter scale is not suitable, reset alarm response level as follows:

8.4.1 Turn meter zero coarse adjustment screw (located under ZERO ADJUST control knob at lower left on instrument panel) to set meter pointer to desired alarm point on meter scale.

8.4.2 Turn ALARM potentiometer adjustment screw until audible alarm sounds.

8.4.3 Turn meter zero coarse adjustment screw to return pointer to zero on meter scale.

8.5 Setting recording level. If recorder (range: 0-100 mv; impedance: 10,000 lhms or greater) is to be used, attach accessory recorder jack to RECORDER plug in right side of instrument case and set recording level as follows:

8.5.1 Set MODE SELECTOR knob to ppm x 100 or ppm x 10 as desired and apply combustible gas to instrument intake.

8.5.2 Turn RECORDER potentiometer adjustment screw until accessory recorder response corresponds with meter readings as desired.

9.0 QUALITY CONTROL

9.1 Calibration of the unit should be verified each day.

9.2 Duplicate samples are tested in each pre-acceptance sample batch or every 10 samples, whichever is more frequent. A quality control chart is kept on the duplicate sample values.

10.0 MONITORING TOXICITY

10.1 Monitor combustible gas and vapor to determine concentrations with respect to Threshold Limit Values as follows:

10.1.1 Turn MODE SELECTOR control knob to BATT TEST position and read condition of battery on meter dial. Install new recharged batteries, if necessary.

10.1.2 Turn MODE SELECTOR control to desired operating range, selected in accordance with the Threshold Limit Value for the toxic gas to be monitored (ppm x 1 for TLV from 0 to 100 ppm; ppm x 10 for TLV from 0 to 1,000 ppm; ppm x 100 TLV from 0 to 10,000 ppm).

10.1.3 Allow ten minute warm-up period with instrument in same position as it is to be used in service (meter facing up or meter facing to the side).

10.1.4 In fresh air before entering monitoring area, turn ZERO ADJUST control knob until meter pointer resets on zero.

10.1.5 For monitoring in noisy areas, insert jack of accessory earphone in plug on right side of instrument case.

10.1.6 Enter monitoring area and read ppm gas concentrations on meter. Audible warning sounds if gas concentration causes readings at midpoint of scale or above, or if toxic Threshold Limit Value has been exceeded, provided the alarm has been set for this response.

10.1.7 For readings above 10,000 ppm: Replace probe assembly 0023-7243 with dilution probe 0023-7355 and slide dilution probe 0-ring to expose dilution holes of probe (extends range 10 x to read up to 100,000 ppm). Add in line filter and trap assembly, if sampling in dust or moisture laden areas.

10.2 Converting Hexane-calibrated meter ppm readings to ppm readings for other gases. Hexan gas is commonly used for factory calibration and subsequent in service recalibrations of the TLV Sniffer. To determine ppm concentrations of gases other than hexane with instruments calibrated for hexane, multiply the ppm meter reading by the factor for the gas detected.

10.3 Converting ppm readings to percent level of lower explosive limit (% L.E.L.). To determine gas concentration levels in terms of percent of lower explosive limit from direct ppm readings for hexane or from calculated ppm concentration levels for other gasses:

10.3.1 Read ppm on TLV Sniffer indicating meter.

10.3.2 On 0-to-10,000 "ppm concentration in sample" horizontal scale at bottom of % L.E.L. Conversion chart (attached), locate position left to right representing ppm reading.

10.3.3 On slanted chart line representing kind of gas detected, find the point in vertical alignment over ppm reading point on horizontal scale.

10.3.4 Locating gas leak sources. To utilize the TLV Sniffer in searching for gas leaks in tanks, pipes, hoses, containers, etc.:

10.4.1 Set MODE SELECTOR control knob to ppm x 1 position.

10.4.2 Search for exact location of leak with probe. Meter

reading will increase as leak is approached and

decrease as probe moves away from leak.

10.5 TLV sniff test procedure for sample fingerprint analysis.

10.5.1 The TLV sniffer probe is held over the surface (within 0.5 cm) of the sample. A positive reading indicates the possibility of volatile organics in the sample.

10.5.2 A reading over 200 ppm indicates the possibility of flammability and a flash point analysis is performed to test for flammability.

11.0 CALCULATIONS

TLV = ppm reading x scale

12.0 DATA FLAGGING AND REMEDIAL ACTION

12.1 Data will be flagged if:

12.1.1 Data generated creates an "out of control" situation on the precision control chart.

12.2 Remedial Action

12.2.1 When the data is flagged, the following areas are reviewed by the analyst and supervisor:

12.2.1.1 Analysis trends as indicated by control charts.

12.3 When a problem is located sample analysis is repeated.

13.0 REFERENCES

Instruction Manual TLV Sniffer, United Technologies Bacharach, Instruction 23-9613, Rev. No. 1, September, 1982.

Clean Harbors Kansas, LLC ANALYTICAL PROCEDURE 6

(USPCI - 6)

OXIDIZER SCREEN

February 18, 1992

Clean Harbors Kansas, LLC ANALYTICAL PROCEDURE 6

(USPCI - 6)

OXIDIZER SCREEN

1.0 SCOPE AND APPLICATION

This method is a rapid qualitative method for determining the presence of oxidizing materials in liquids and sludge samples.

2.0 SAFETY

2.1 Wear appropriate gloves and safety glasses when handling hazardous samples.

2.2 Perform analysis in the hood to prevent contact with sample vapors.

3.0 PROCEDURE

Wet a strip of KI - starch paper in HCl. Dip the wetted strip into the sample. Note the color that develops. Anywhere from light brown to dark purple or black indicated that oxidizing material is likely present. Light brown is generated on contact with nitric acid and deep purple forms on contact with hydrogen peroxide.

4.0 QUALITY CONTROL

At least one duplicate must be analyzed per sample set or for every 10 samples, which ever gives the greater frequency.

Clean Harbors Kansas, LLC ANALYTICAL PROCEDURE 7

(USPCI - 7)

RADIOACTIVITY SCREEN

February 18, 1992

Clean Harbors Kansas, LLC ANALYTICAL PROCEDURE 7

(USPCI - 7)

RADIOACTIVITY SCREEN

1.0 SCOPE AND APPLICATION

This method is to detect the presence of any radioactive material in a representative sample of waste.

2.0 SUMMARY OF METHOD

To detect and measure the presence of radioactivity in a sample it will be placed within six inches of a scintillation detector. A scintillation detector is capable of measuring low-level gamma radiation in micro R/hr.

3.0 INTERFERENCE

No known interferences.

4.0 SAFETY

Treat all samples as if hazardous. Wear appropriate gloves, safety glasses, and lab coat. The sample container does not have to be opened to perform the test.

5.0 APPARATUS AND EQUIPMENT

Ludlum Model 19 Micro Rad Meter, or equivalent.

6.0 REAGENTS

None required.

7.0 SAMPLE HANDLING AND PRESERVATION

No preservation is needed. Keep sample tightly sealed. Place entire sample within six inches of the detector.

8.0 CALIBRATION AND STANDARDIZATION

The meter is to be recalibrated annually by the manufacturer.

9.0 QUALITY CONTROL

None.

10.0 PROCEDURE

10.1 Prior to turn-on, place the response switch in the S (slow) position and place audio switch in the off position.

10.2 Turn-on the meter by placing meter on the 0 to 50 micro R/hr scale.

10.3 Depress the BATT Test Button. If the meter pointer is below the check line replace the meter's batteries.

10.4 Depress the R (reset) Button. Check to see if meter pointer returns to Zero.

10.5 The meter is ready for use. Allow the meter to return to background activity approximately 10 to 20 micro R/hr Response time should be 10 to 15 seconds.

10.6 Place sample within six inches of the detector located in the front of the meter. Allow 10 to 15 seconds for meter response. If reading is less than 40 micro R/hr above background the test is negative. Any readings which are greater, the General Manager or Lab Manager will be notified.

11.0 CALCULATIONS

The meter is a direct readout. Ensure meter is set on the proper scale.

12.0 PRECISION AND ACCURACY

No historical data is available at this time.

13.0 DATA FLAGGING AND REMEDIAL ACTION

13.1 Data will be flagged by the analyst if readings exceed 40 micro R/hr above background.

14.0 REFERENCES

Instruction Manual for Ludlum Model 19 MICRO R Meter, Ludlum

Clean Harbors Kansas, LLC
Analytical Procedures

Measurement Inc., Sweetwater, Texas.

Clean Harbors Kansas, LLC ANALYTICAL PROCEDURES 8

(USPCI - 8)

FIXATION REQUIREMENT
(RECIPE)

February 18, 1992

Clean Harbors Kansas, LLC ANALYTICAL PROCEDURE 8

(USPCI - 8)

FIXATION REQUIREMENTS (RECIPE)

1.0 SCOPE AND APPLICATION

This test is for determining the amount of reagents (fly ash, cement kiln dust, lime, cement, silicate based reagents, activated carbon, water, etc...) that must be added to waste streams containing free liquids to stabilize the waste stream or to pass treatment standards.

2.0 SUMMARY OF METHOD:

A weighed amount of sample is mixed while slowly adding reagent(s) until no free liquids can be seen. The mixture is then weighed and the ratio of sample to reagent(s) is recorded. The mixture is then subjected to the Paint Filter Liquids Test (Methods 9095), more reagent(s) is (are) added until the Paint Filter Liquid Test indicates no free liquids. The final ratio of reagent to sample is the one used for waste stream stabilization prior to disposal. To determine if the mixture meets the treatment standard, the mixture must be subjected to the appropriate test procedure.

3.0 SAFETY

Wear appropriate gloves and safety glasses when handling samples.

4.0 PROCEDURE:

4.1 Weigh approximately 25 grams of sample into a 50 ml disposable beaker.

4.2 Gradually add reagent(s) and mix until no free liquids are observed. Weigh mixture.

4.3 Subject mixture to Paint Filter Liquids Test (Method 9095) or to TCLP if the mixture is to meet CCWE treatment standards.

4.4 Add more reagent(s) if free liquids are found with method 9095.

4.5 Determine final ratio of reagents(s) to sample for adequate fixation of free liquids or to meet treatment standards.

5.0 QUALITY CONTROL

5.1 Duplicate samples are run for 1 sample in 10.

5.2 Quality control charts are kept to indicate the method precision on duplicate samples.

6.0 REFERENCES

SW-846 Method 9095 40 CFR Part 268

Clean Harbors Kansas, LLC ANALYTICAL PROCEDURE 10

(USPCI - 10)

REDUCER SCREEN

February 18, 1992

batteries.

10.4 Depress the R (reset) Button. Check to see if meter pointer returns to Zero.

10.5 The meter is ready for use. Allow the meter to return to background activity approximately 10 to 20 micro R/hr Response time should be 10 to 15 seconds.

10.6 Place sample within six inches of the detector located in the front of the meter. Allow 10 to 15 seconds for meter response. If reading is less than 40 micro R/hr above background the test is negative. Any readings which are greater, the General Manager or Lab Manager will be notified.

11.0 CALCULATIONS

The meter is a direct readout. Ensure meter is set on the proper scale.

12.0 PRECISION AND ACCURACY

No historical data is available at this time.

13.0 DATA FLAGGING AND REMEDIAL ACTION

13.1 Data will be flagged by the analyst if readings exceed 40 micro R/hr above background.

14.0 REFERENCES

Instruction Manual for Ludlum Model 19 MICRO R Meter, Ludlum Measurement Inc., Sweetwater, Texas.

ck line replace the met

Clean Harbors Kansas, LLC ANALYTICAL PROCEDURES 8

(USPCI - 8)

FIXATION REQUIREMENT
(RECIPE)

February 18, 1992

Clean Harbors Kansas, LLC ANALYTICAL PROCEDURE 8

(USPCI - 8)

FIXATION REQUIREMENTS (RECIPE)

1.0 SCOPE AND APPLICATION

This test is for determining the amount of reagents (fly ash, cement kiln dust, lime, cement, silicate based reagents, activated carbon, water, etc...) that must be added to waste streams containing free liquids to stabilize the waste stream or to pass treatment standards.

2.0 SUMMARY OF METHOD:

A weighed amount of sample is mixed while slowly adding reagent(s) until no free liquids can be seen. The mixture is then weighed and the ratio of sample to reagent(s) is recorded. The mixture is then subjected to the Paint Filter Liquids Test (Methods 9095), more reagent(s) is (are) added until the Paint Filter Liquid Test indicates no free liquids. The final ratio of reagent to sample is the one used for waste stream stabilization prior to disposal. To determine if the mixture meets the treatment standard, the mixture must be subjected to the appropriate test procedure.

3.0 SAFETY

Wear appropriate gloves and safety glasses when handling samples.

4.0 PROCEDURE:

4.1 Weigh approximately 25 grams of sample into a 50 ml disposable beaker.

4.2 Gradually add reagent(s) and mix until no free liquids are observed. Weigh mixture.

4.3 Subject mixture to Paint Filter Liquids Test (Method 9095) or to TCLP if the mixture is to meet CCWE treatment standards.

4.4 Add more reagent(s) if free liquids are found with method 9095.

4.5 Determine final ratio of reagents(s) to sample for adequate fixation of free liquids or to meet treatment standards.

5.0 QUALITY CONTROL

5.1 Duplicate samples are run for 1 sample in 10.

5.2 Quality control charts are kept to indicate the method precision on duplicate samples.

6.0 REFERENCES

SW-846 Method 9095 40 CFR Part 268

Clean Harbors Kansas, LLC ANALYTICAL PROCEDURE 10

(USPCI - 10)

REDUCER SCREEN

February 18, 1992

Clean Harbors Kansas, LLC ANALYTICAL PROCEDURE 10

(USPCI - 10)

REDUCER SCREEN

1.0 SCOPE AND APPLICATION

This method provides a spot test for the presence of reducing agents in a sample. This is a screening method value rather than a quantified result using a colorimetric method. It provides a POS/NEG result.

2.0 SUMMARY OF METHOD

A small amount of sample (with the pH adjusted to < 8) is placed in a test tube containing I_2 starch solution. If a reducer is present, the blue color of the indicator will fade.

3.0 SAFETY

3.1 Wear gloves/safety-glasses.

3.2 Perform test in a hood to vent any possible fumes from sample and/or acetic acid.

3.3 Use caution handling glacial acetic acid.

4.0 INTERFERENCES

No interferences are anticipated. However, strong bases will cause a false positive result. It is very important to adjust pH.

5.0 REAGENTS

5.1 Glacial acetic acid - ACS Grade, for adjusting pH.

5.2 Reducing agent indicator.

5.2.1 Place 500 ml deionized water in a 1000 ml beaker and heat just short of boiling. Remove from heat.

5.2.2 Add 5 gm soluble starch and stir until all of the starch is dissolved.

5.2.3 Dilute starch solution 1:1 with deionized water. Allow to cool to room temperature.

5.2.4 Add 1 gm of elemental iodine to 50 ml of ethyl alcohol. Stir until all the iodine is dissolved.

5.2.5 After starch is cool, add 10 ml of iodine solution to starch. Place this mixture in a dark bottle and store in a dark place.

6.0 PROCEDURE

6.1 A starch solution produces a deep blue color in the presence of elemental iodine. A reducing agent present in a sample will donate an electron to the iodine and clear the solution.

6.1.1 Transfer 1 gm of sample to a 55 ml disposal beaker.

6.1.2 Add 10 ml deionized water.

6.1.3 Adjust the pH to < 8 with 1:1 acetic acid.

6.1.4 Add 20 ml indicator to another 55 ml beaker.

6.1.5 Add 10 drops of the pH adjusted sample solution to the beaker of indicator.

6.1.6 The blue color will fade if a reducing agent is present.

7.0 QUALITY CONTROL

7.1 Samples should be tested in duplicate at a frequency of not less than 10%.

7.2 A positive can be found using a solution of sodium thiosulfate.

8.0 REFERENCES

Standard Methods for Examination of Water and Wastewater, 16th Ed.

Analytical Chemistry, 4th Ed,. Gary Christian.

Clean Harbors Kansas, LLC ANALYTICAL PROCEDURE 11

(USPCI - 11)

EXTRACTION FOR SOLIDS

February 18, 1992

Clean Harbors Kansas, LLC
Analytical Procedures

USPCI-11.1

August 14, 1998

Clean Harbors Kansas, LLC ANALYTICAL PROCEDURE 11

USPCI - 11

EXTRACTION FOR SOLIDS

1.0 SCOPE AND APPLICATION

1.1 This method is used in the screening of waste samples for high levels of organic halides. This method is primarily used to screen solvents, although some semi-volatiles (bp> 200° C) will be detected. Heavier PCBs do not extract well with polar solvents.

1.2 Methanol is the current solvent and yields good (>90%) matrix spike recoveries. Other solvents can be used provided they yield adequate spike recoveries.

2.0 METHOD SUMMARY

A nominal 1 gram sample of waste is extracted with methanol using physical agitation.

3.0 INTERFERENCES

The TOX analyzer is relatively interference free.

4.0 SAFETY PRECAUTIONS

Waste samples can contain extreme levels of hazardous compounds. The analyst should be acquainted with the waste stream and take precautions consummate with the potential risk.

5.0 APPARATUS AND EQUIPMENT

5.1 25 ml Septum capped vial, or equivalent.

5.2 Sample Agitator (optional).

6.0 REAGENTS

Methanol, interference free, or equivalent.

7.0 SAMPLE HANDLING AND PRESERVATION

7.1 Samples should be extracted in a timely manner. No holding time exists for samples of this type. No preservative is required.

7.2 It is recommended that extracts not to be analyzed within 7 days be stored at 4°C±2°C. Extracts should not be stored more than 30 days.

8.0 CALIBRATION AND STANDARDIZATION

For details of instrument calibration, see the applicable parts of the QA Plan (Instrument Calibration).

9.0 PROCEDURE

9.1 Obtain the tare weight of a 25 ml vial.

NOTE: All weights in this method are to be recorded to the nearest 0.01 grams, unless otherwise noted.

9.2 Add a nominal 1 gram of sample and record the gross weight.

9.3 Add 10 ml of methanol to the sample and agitate for 1 minute.

10.0 SAMPLE CALCULATIONS

Quantity of TOX is expressed as mg/kg TOX (as chloride).

Sample concentration is:

$$\text{mg/kg TOX} = \frac{(\text{ug TOX}) \times (\text{ml Extract}) \times 1000}{(\text{ul injected}) \times (\text{gm sample})}$$

11.0 QUALITY CONTROL

11.1 Method Blank - A method blank should be analyzed at a minimum frequency of 10% or 1 per extraction batch.

11.2 Matrix Spike/Matrix Spike Duplicate (MS/MSD) - an MS/MSD will be run at a minimum frequency of 10%.

11.2 2,4,6-Trichlorophenol will be used as the spiking compound. A solution independent of the calibration standard will be used.

12.0 METHOD PERFORMANCE

12.1 Method spike recoveries should be between 75% - 125%.

12.2 Method duplicate precision should be <30% RPD.

13.0 REFERENCES

Waste dilution, Method 3580, SW-846

Sonification extraction, Method 3550, SW-846

Clean Harbors Kansas, LLC ANALYTICAL PROCEDURE 21

(USPCI - 21)

RADIANT HEAT IGNITION TEST PROCEDURE

(IGNITABLE SOLIDS SCREEN)

February 18, 1992

Clean Harbors Kansas, LLC ANALYTICAL PROCEDURE 21

(USPCI - 21)

RADIANT HEAT IGNITION TEST PROCEDURE

(IGNITABLE SOLIDS SCREEN)

1.0 SUMMARY OF METHOD

A sample is placed 6 cm beneath a preheated radiant heat source and the time to ignition is detected by a thermocouple sensor and recorded on a strip chart recorder.

2.0 APPARATUS AND REAGENTS

2.1 Test chamber - as shown in Figure 1.

2.2 Sample container - aluminum weighing pan, 6 cm diameter x 1.7 cm deep.

2.3 Controller/sensor - as shown in figure 1.

2.4 Recorder - strip chart, variable speed and input impedance.

2.5 Safety Equipment

2.5.1 Flameproof gloves (Lab Safety Supply 1915M or equivalent)

2.5.2 Tongs - 53 cm (Fisher, 15-207 or equivalent)

2.5.3 Respirator (Fisher, 13-995-11 or equivalent)

2.6 Balance (minimum accuracy to nearest 100 mg)

3.0 TEST PROCEDURE

3.1 Locate the test chamber in a fireproof fume hood with the exhaust fan turned on.

3.2 If the hood is large enough, locate the controller/sensor and the recorder outside the hood but in proximity to the test chamber.

3.3 With an empty sample container on the sample platform to

provide a heating element (Figure 1: part no. 1) to sample container (top rim) distance of 6 cm.

3.4 Position the thermocouple (Figure 1; part no 7) 1 cm above the top rim and centered over the sample container.

3.5 Connect the thermocouple to position 33 (Figure 1) on the controller/sensor using the cable supplied.

3.6 Connect the heater/solenoid cable (Figure 1: part no. 16, 17) to position 34 (Figure 1) on the controller/sensor.

3.7 Connect the power cord on the controller/sensor to a 110 VAC power source.

3.8 Set the variable transformer to 0.

3.9 Position a dummy sample container (blackened with carbon soot) directly under heat source. Close the chamber door.

3.10 Turn on the controller/sensor.

3.11 Turn on the heater. Set the variable transformer to the setting determined during the temperature adjustment procedure.

3.12 Preheat the radiant heat source for 30 minutes.

3.13 Transfer sample to the sample container to a depth of approximately 1 cm, making sure that the sample surface is level and smoothed.

WARNING!!

Extreme care must be exercised in testing materials known or suspected of being highly flammable. Preliminary test using greatly diminished sample sizes should be conducted prior to performing the actual test to insure the safety of the analyst. A reduced test sample depth should be used in cases where sample ignition is extremely rapid and/or violent.

3.14 Place the filled sample container outside, but in proximity to, the test chamber.

3.15 Start the recorder at a chart speed of 0.5 in/min and a full-

scale sensitivity of 1 volt.

3.16 Open the side door and remove the dummy sample container.

3.17 Using tongs and flameproof gloves, pick up the filled sample container and place it onto the metal trough. With the tongs, slide the sample container under the radiant heat source. Immediately, close the side door and activate the recorder zero knob to mark the chart.

CAUTION!!

The placement of the sample beneath the radiant heat source, the marking of the recorder chart and the closing of the chamber door must be executed as quickly as possible to optimize the precision of the test results.

3.18 Raise the chamber door and remove the ignited sample from beneath the radiant heat source and carefully place it in the bottom of the chamber.

WARNING!!

Raise the fume hood and test chamber doors just to a level that facilitates removal of the sample form beneath the radiant heat source. Flameproof gloves should be used in combination with tongs to protect the analyst from the burning sample.

3.19 Extinguish the fire by smothering.

3.20 Prepare the chamber for the next sample by positioning the dummy sample container beneath the radiant heat source.

3.21 Lower the fume hood door to one-half the height of the chamber.

3.22 Measure the distance (cm) from the initial mark to ignition on the recorder. Calculate the time to ignition from the calibrated recorder speed.

3.23 Proceed with the analysis of subsequent samples by repeating steps 3.13 through 3.22

Clean Harbors Kansas, LLC ANALYTICAL PROCEDURE 25

(USPCI-25)

COMPATIBILITY EVALUATIONS

February 18, 1992

Clean Harbors Kansas, LLC ANALYTICAL PROCEDURE 25

(USPCI-25)

COMPATIBILITY EVALUATIONS

Compatibility Evaluations:

Two evaluation procedures are discussed below, the first dealing with determination of waste to waste compatibility, and the second with waste to container or tank materials of construction compatibility.

Waste to Waste Compatibility Evaluation:

The determination of whether, or not, two wastes are compatible may involve up to three levels of evaluation. The first level will rely on a review of the results of previous compatibility determinations for the wastes under evaluation. If a compatibility determination cannot be made from a review of previous evaluations, a second level of evaluation will be employed.

This second level will involve a review of analytical data on file for the wastes under evaluation and a search of appropriate literature and/or the use of "Compatibility Charts" to assess the potential for the waste streams to be compatible. Sources of information would include 40 CFR 264, Appendix V, Example of Potentially Incompatible Wastes; or "A Method For Determining The Compatibility of Hazardous Wastes", EPA- 600/2-80-076, April 1980. If a determination about compatibility cannot be made after reviewing the procedures above, a third level of evaluation will be employed.

The third level of evaluation will require that a laboratory test procedure be performed, in which samples of the wastes are mixed and observed for signs of adverse reaction. The Technical Manager will not be required to perform all three levels of evaluation, but may opt to begin the evaluation at level two or at level three. If a determination is made that wastes are incompatible, the wastes will be segregated during storage at Clean Harbors Kansas, LLC If the laboratory test procedure indicates that the waste streams are compatible, then these waste streams may be mixed during storage regardless of the results of the determinations made at level one or level two.

Waste to Waste Compatibility Testing Procedure

General Safety Precautions:
At a minimum, laboratory personnel will wear safety glasses, gloves, protective clothing, and protective footwear while performing the tests for waste compatibility. The tests will be perfomed under a lab fume hood. Laboratory personnel will check the manifest and other shipping documents to be familiar with the wastes and ensure that all necessary precautions are taken.

Detailed Procedure:

- Place a clean beaker in a fume hood.
- Add 100 - 150 ml of a representative sample of waste stream "A" (one of the wastes to be mixed or which may come into contact during storage).
- Add 100 - 150 ml of a representative sample of waste stream "B" (the other wastes to be mixed or which may come into contact during storage) to the same beaker.
- Check for these typical signs of reactivity:
  - gas generation (method: visual inspection)
  - temperature change (method: thermometer)
  - violent reactions (method: visual or audible inspection)
  - fire/explosion (method: visual or audible inspection)
- If a reaction exhibiting one or more of the above characteristics occurs, the waste streams will be deemed incompatible and will not be stored together or mixed together in a tank or container.

Waste to Tank or Container Compatibility Evaluation:

The evaluation of whether, or not, a waste is compatible with the tank or container into which it is desired to place the waste is based on determining the potential of the waste to corrode the materials of construction of the tank or container. As many of the tanks at Clean Harbors Kansas, LLC are of carbon steel construction, the evaluation focuses on the potential of wastes to corrode carbon steel.

Prior to storing a waste in a tank or in a container fabricated of carbon steel, the waste will be checked for compatibility with carbon steel. A pH analysis and Table WC.1 will be used to determine the compatibility of the waste sample.

If the pH is determined to be less than or equal to 2.0 or equal to or greater than 12.5, (<=2.0, pH, =>12.5) and thus exhibits the regulatory characteristic of corrosivity, then the waste will not be stored in direct contact with carbon steel.

If the pH of the waste is determined to be greater than 2.0 and less than 12.5 ($2.0 < pH < 12.5$), then a review of the Waste Profile Sheet for the presence of any compounds listed in Table WC.1 will be performed. Table WC.1 was developed by LES after reviewing published sources and compiling a list of compounds (with corresponding concentrations) that corrode carbon steel at a rate greater than 0.05 inches per year at temperatures from 0° to 130° F. It should be noted that this rate of corrosion is only 20% of the rate at which a waste would meet the characteristic of corrosivity.

If the Waste Profile Sheet indicates that the concentration of a compound exceeds the level indicated in Table WC.1, the waste will not be treated or stored in carbon steel tanks (uncoated) or stored in a container made of carbon steel (unlined). Such a waste may be placed in a fiberglass reinforced plastic tank or a container furnished with a corrosion resistant lining.

Compatibility sources utilized include The Chemical Engineer's Handbook, Perry and Chilton, 5th ed., pg. 23-16 to 23-34, 1973; Engineering Materials Handbook, Mantell, 38-1 to 38-19, 1958.

Table WC.1
Compatibility of Waste with Carbon Steel[1]

Compound	Concentration (volume %) - (C)	Temperature Range (deg F) - T
acetic acid	5 < C < 100	T > 60
chromic acid	5 < C < 20	T > 60
citric acid	10 < C < 40	T > 60
formic acid	C > 25	T > 60
hydrochloric acid	C > 5	T > 60
hydrofluoric acid	10 < C < 60	T > 60
nitric acid	C > 5	T > 60
oxalic acid	7 < C < 13	T > 60
phosphoric acid	C > 5	T > 60
sulfuric acid	10 < C < 90	T > 60
aluminum chloride	10 < C < 90	T > 60
aluminum potassium sulfate	7 < C < 13	T > 60
ammonium chloride	20 < C < 30	T > 60
aniline	100	T > 60
calcium hypochlorite	100	T > 60
copper sulfate	5 < C < 100	T > 60
fatty acids	100	T > 60
ferric chloride	10 < C < 45	T > 60
ferrous chloride	10 < C < 25	T > 60
ferrous sulfate	7 < C < 13	T > 60
hydrogen peroxide	15 < C < 50	T > 60
nickel sulfate	10 < C < 100	T > 60
potassium hydroxide	35 < C < 50	T > 100
sodium chloride	100	T > 100
soduim hydroxide	45 < C < 75	T > 100
zinc chloride	10 < C < 65	T > 50
zinc sulfate	10 < C < 35	T > 50

NOTE: Compounds listed above are corrosive to carbon steel at a rate greater than 0.05 inches per year at the given concentrations and temperatures. Many of the concentrations given do not fall within the pH constraints set for the compatibility of the waste with the carbon steel tanks. Therefore, consideration for compliance with the above table for waste streams that do not fall within the pH requirements set will not be required.

Clean Harbors Kansas, LLC ANALYTICAL PROCEDURE 1

(HRIW - 1)

EXPLOSIVITY SCREEN

February 18, 1992

Clean Harbors Kansas, LLC **ANALYTICAL PROCEDURE 1**

(HRIW - 1)

EXPLOSIVITY SCREEN

1.0 SCOPE AND APPLICATION

An organic vapor analyzer is used to determine the concentration of organic vapors in air. For the purpose of this method, the air in question will be the headspace above liquid or solid waste samples.

2.0 SUMMARY OF METHOD

2.1 A portable gas detection unit is used to determine concentrations of oxygen (as % O_2) or combustible gases (as ppm or % LEL) in the atmosphere. Sample vapors are drawn across a combustible gas detector (Wheatstone bridge), through the pump, to flow across an oxygen detector and vent to the outside. Readings obtained are displayed on either an analog meter dial or a digital display.

3.0 INTERFERENCES

3.1 Humidity can effect the reading obtained in the low ppm range.

3.2 Certain substances, particularly silicone vapors, act as "catalyst poisons" and can result in decreased sensitivity.

3.3 Chlorinated vapors will give a catalytic response although they are not truly flammable.

3.4 Since acetylene is very active catalytically it may tend to give a reaction at the reference element, thereby nullifying the signal from the active element.

3.5 When sampling spaces which are warmer than the instrument, water vapor can condense in the sample line, blocking the flame arrestor and interfering with pump operation.

4.0 SAFETY

4.1 The electric circuitry of the unit is certified to be intrinsically safe and can be safely used in testing any mixture of combustible gas in air.

4.2 Safety glasses, lab coat, and chemically resistant gloves should be worn while handling laboratory samples.

5.0 APPARATUS AND EQUIPMENT

5.1 GasTechtor model #1314 Hydrocarbon Super Surveyor equipped with a 10 inch probe and hose sample inlet system, or equivalent.

5.2 Calibration gas with known ppm levels of a hydrocarbon.

6.0 SAMPLE HANDLING AND PRESERVATION

Keep samples tightly capped and analyze as soon as possible to prevent the escape of vapors.

7.0 CALIBRATION AND STANDARDIZATION

7.1 Press the power switch to turn the instrument on. Press the battery check button and note the meter reading. The reading must be above the BATT CK mark on the meter for use. If not, the meter must be recharged.

7.2 Setting the LEL span.

7.2.1 Expose the sample probe tip to a known calibration gas.

7.2.2 Locate the LEL SPAN potentiometer on the underside of the circuit board inside the unit, along one edge, near the front.

7.2.3 Watch the combustibles display carefully, and adjust the reading to the desired value by turning the potentiometer. Turn the potentiometer clockwise to increase the reading.

7.2.4 Remove the calibration gas and allow the reading to return to zero. If the reading does not return to zero repeat the above steps until the correct reading is obtained.

7.2.5 If reading cannot be set high enough, replace the detector.

7.3 Setting the Oxygen zero.

7.3.1 Expose the sample probe tip to a known oxygen-free sample, such as nitrogen, argon, or helium.

7.3.2 Locate the ZERO potentiometer, along the front edge of the circuit board.

7.3.3 Watch the display carefully, and, if necessary, adjust the reading to zero by turning the ZERO potentiometer.

7.3.4 If zero adjustment cannot be made, have the oxygen cell reactivated.

7.4 There is no separate field adjustment needed for the PPM span. The relationship between LEL and PPM sensitivity is precalculated and set at the factory.

8.0 PROCEDURE

8.1 Turn the instrument on and allow to warm up in ambient air. The unit may be used when warm up is complete (usually about 2 minutes), but full stabilization of the readings may take up to 20 minutes.

8.2 Laboratory readings are reported in ppm, therefore make sure that the LEL/PPM button is in the PPM position.

8.3 Unscrew the lid of the sample jar and tilt it only enough to allow the probe to enter the headspace over the sample. Read and record the highest reading shown on the meter.

9.0 QUALITY CONTROL

9.1 Calibration should be verified daily using a gas with known ppm levels of a hydrocarbon to ensure accuracy of results.

9.2 Replicate readings should be taken on samples at a frequency of at least 20% to ensure precision of results.

Clean Harbors Kansas, LLC ANALYTICAL PROCEDURE 2

(HRIW - 2)

HOC SCREEN

February 18, 1992

Clean Harbors Kansas, LLC ANALYTICAL PROCEDURE 2

(HRIW - 2)

HOC SCREEN

1.0 SCOPE AND APPLICATION

The Bielstein test provides an easy and reliable screen for detecting the presence of organic halogens in a sample. The test does not differentiate between chlorine, bromine, and iodine. Fluorine does not produce a positive result.

2.0 SUMMARY OF METHOD

When an organic halogen is heated with copper oxide the result is the production of a volatile copper halide which imparts a blue-green color to the flame. Two methods are given here, one for volatile compounds and one for non-volatile compounds, differing only in the way that the sample is introduced into the flame.

3.0 INTERFERENCES

3.1 Very volatile liquids may evaporate before the test is complete.

3.2 Several non-halogenated compounds have been stated to also cause a green flame, such as organic acids, copper cyanide, urea, quinoline, and pyridine derivatives.

4.0 SAFETY

4.1 Since this method utilizes an open flame, caution must be used around flammable solvents and materials.

4.2 Safety glasses, lab coat, and chemically resistant gloves should be worn while handling laboratory samples.

5.0 APPARATUS AND EQUIPMENT

5.1 Propane refrigerant sniffer (Freon leak detector).

5.2 For non-volatile compounds, a 20 gauge wire with a small loop in the end.

6.0 SAMPLE HANDLING AND PRESERVATION

All samples should be kept in containers with a tight, leakproof cap.

7.0 PROCEDURE

7.1 Volatile compounds.

7.1.1 Ignite the leak detector and allow the copper disk inside the burner to become red hot.

7.1.2 Unscrew the lid of the sample jar and place the aspirator tube into the headspace above the sample. If halogen is present, the flame will burn green to blue-green.

7.1.3 Highly volatile hydrocarbons which are not halogenated may cause the flame to burn more vigorously and bright yellow in color. This should not be confused with a positive result.

7.2 Non-volatile compounds.

7.2.1 Ignite the leak detector. Hold the looped end of the copper in the flame and burn off any residue. Cool the wire.

7.2.2 Unscrew the lid of the sample jar and dip the wire into the sample. Immediately plunge the wire into the flame. After the sample burns, note the color change in the flame. If halogen is present, the flame will have a green color.

8.0 QUALITY CONTROL

Test daily with a one percent solution of trichloroethylene in methanol. A positive test should be seen for either method.

Clean Harbors Kansas, LLC **ANALYTICAL PROCEDURE 3**

(HRIW - 3)

IGNITABILITY OF SOLIDS

February 18,1992

Clean Harbors Kansas, LLC ANALYTICAL PROCEDURE 3

(HRIW - 3)

IGNITABILITY OF SOLIDS

1.0 SCOPE AND APPLICATION

This method is used to determine the susceptibility of a solid or semi-solid waste to ignition by a spark source or open flame.

2.0 SUMMARY OF METHOD

Sparks from a flint lighter or an open flame are introduced to the headspace above a sample of solid waste, and observation is made for either a flash in the vapor space or ignition of the sample.

3.0 SAFETY

3.1 Since this method utilizes an open flame, caution must be used around flammable solvents and materials.

3.2 Safety glasses, lab coat, and chemically resistant gloves should be worn while handling laboratory samples.

4.0 APPARATUS AND EQUIPMENT

4.1 Flint lighter, wooden or paper matches, or other source for sparks or flame.

4.2 A 300 mL beaker, or a similar container of adequate size to accomodate the sample with vapor space.

4.3 A watch glass of adequate size to cover the mouth of the beaker.

4.4 A timer or stop watch.

5.0 SAMPLE HANDLING AND PRESERVATION

All samples should be kept in containers with a tight,

leakproof cap.

6.0 PROCEDURE

6.1 Place approximately 100 mL of well-mixed sample into the beaker and cover with the watch glass.

6.2 Allow to stand closed for about five minutes.

6.3 Tilt the watch glass and carefully place the ignition source directly in the vapor space above the sample in the beaker. A flash in the vapor space or ignition of the sample itself indicates a positive test.

7.0 QUALITY CONTROL

The simple positive/negative nature of this screen does not lend itself to typical QA/QC measures. Suspect results should be repeated or verified by other methods.

Attachment C-D

Excerpts from "Samplers and Sampling Procedures for Hazardous Waste Streams"

February 18, 1992

Clean Harbors Kansas, LLC
RCRA Permit Application
Section C - Waste Characterization
Appendix C-A - Waste Analysis Plan
Attachment C-D - Sampling

INSERT 20 PAGES OF EXCERPTS FROM "SAMPLERS AND SAMPLING PROCEDURES FOR HAZARDOUS WASTE STREAMS.

February 18, 1992

SECTION 4

SAMPLERS

Sampling of hazardous wastes requires different types of samplers. Some of these samplers are commercially available, but the others have to be fabricated. This section lists and describes suitable samplers. Their uses and commercial availability as well as directions for their use are reported. Directions for fabricating the commercially unavailable samplers are also outlined.

COMPOSITE LIQUID WASTE SAMPLER (COLIWASA)

The Coliwasa is the single most important hazardous waste sampler discussed in this report. It was chosen from a number of other liquid samplers, based on laboratory and field tests, as the most practical. It permits the representative sampling of multiphase wastes of a wide range of viscosity, corrosivity, volatility, and solids content. Its simple design makes it easy to use and allow the rapid collection of samples, thus minimizing the exposure of the sample collector to potential hazards from the wastes. The sampler is not commercially available, but it is relatively easy and inexpensive to fabricate. The cost of fabrication is low enough that the contaminated parts may be discarded after a single use when they cannot be easily cleaned.

The recommended model of the Coliwasa is shown in Figure 1. The history and development of this sampler is discussed in detail in Appendix A. The main parts of the Coliwasa consist of the sampling tube, the closure-locking mechanism, and the closure system.

The sampling tube consists of a 1.52-m(5-ft.) by 4.13-cm(1 5/8-in.) I.D. translucent plastic pipe, usually polyvinyl chloride (PVC) or borosilicate glass plumbing tube. The closure-locking mechanism consists of a short-length, channeled aluminum bar attached to the sampler's stopper rod by an adjustable swivel. The aluminum bar serves both as a T-handle and lock for the sampler's closure system. When the sampler is in the open position, the handle is place in the T-position and pushed down against the locking block. This manipulation pushes out the neoprene stopper and opens the sampling tube. In the close position, the handle is rotated until one leg of the T is squarely perpendicular against the locking block. This tightly seats the neoprene stopper against the bottom opening of the sampling tube and positively locks the sampler in the close position. The closure tension can be adjusted by shortening or lengthening the stopper rod by screwing it in or out

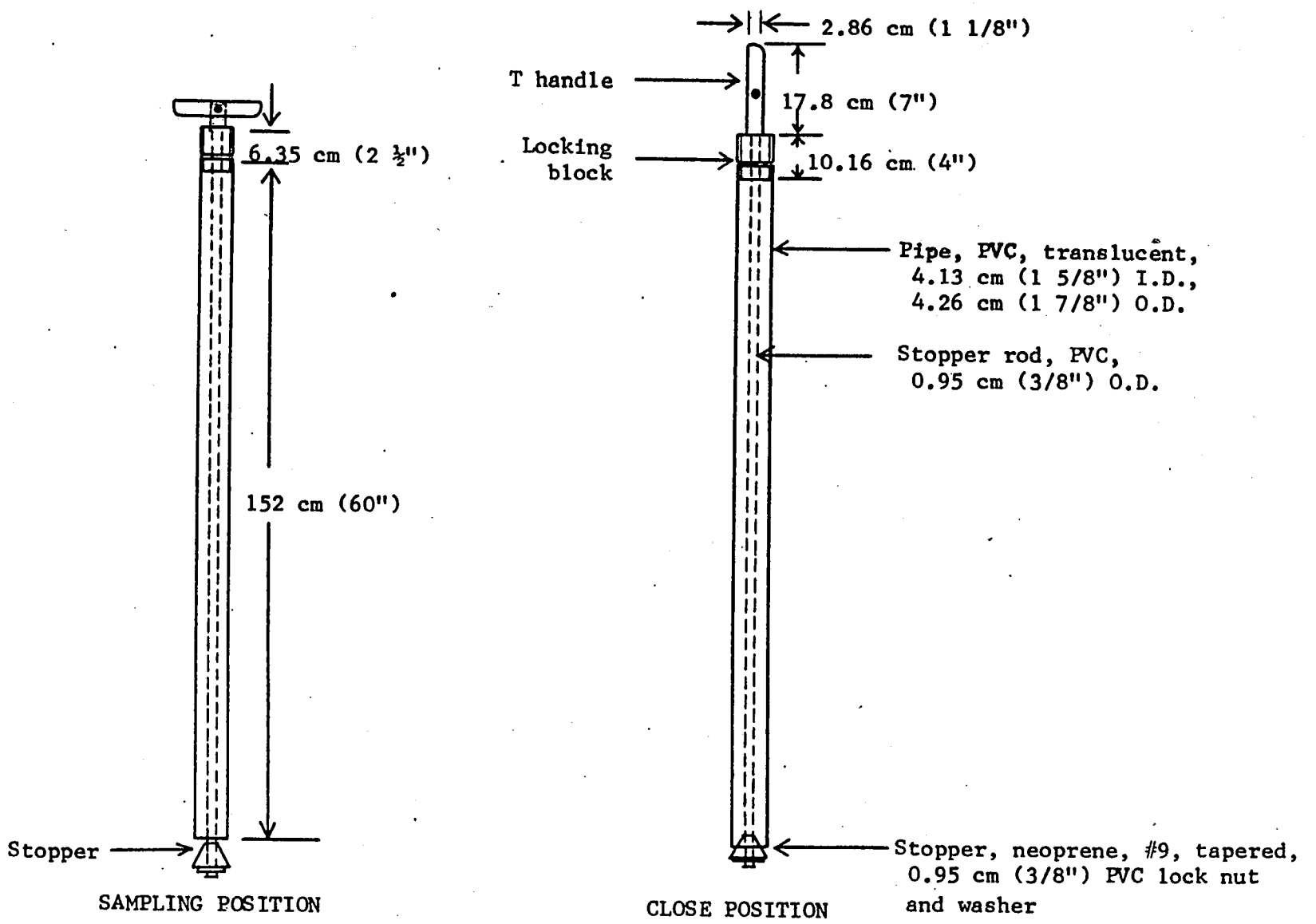

Figure 1. Composite liquid waste sampler (Coliwasa)

of the T-handle swivel. The closure system of the sampler consists of a sharply taped neoprene stopper attached to a 0.95-cm (3/8-in.) O.D. rod, usually PVC. The upper end of the stopper rod is connected to the swivel of the aluminum T-handle. The sharply tapered neoprene stopper can be fabricated according to specifications by plastic products manufacturers at an extremely high price, or it can be made in-house by grinding down the inexpensive stopper with a shop grinder as described in Note 1 of Appendix B.

Two types of Coliwasa samplers are made, namely plastic or glass. The plastic type consists of translucent plastic (usually PVC) sampling tube. The glass Coliwasa uses borosilicate glass plumbing pipe as the sampling tube and Teflon plastic stopper rod.

The complete list of parts for constructing the two types of Coliwasa samplers is given in Appendix B. The suppliers and approximate costs of the parts as well as the directions for fabricating the commercially unavailable parts are also given.

The sampler is assembled as shown in Figure 1 and as follows:

1. Attach the swivel to the T-handle with the 3.18 cm(1¼ in.) long bolt and secure with the 0.48 cm(3/16 in.) National Coarse(NC) washer and lock nut.

2. Attach the neoprene stopper to one end of the stopper rod and secure with the 0.95 cm(3/8 in.) washer and lock nut.

3. Install the stopper and stopper rod assembly in the sampling tube.

4. Secure the locking block sleeve on the block with glue or screws. This block can also be fashioned by shaping a solid plastic rod on a lathe to the required dimensions.

5. Position the locking block on top of the sampling tube such that the sleeveless portion of the block fits inside the tube, the sleeve sits against the top end of the tube, and the upper end of the stopper rod slips through the center hole of the block.

6. Attach the upper end of the stopper rod to the swivel of the T-handle.

7. Place the sampler in the close position and adjust the tension on the stopper by screwing the T-handle in or out.

Uses

The plastic Coliwasa is used to sample most containerized liquid wastes except wastes that contain ketones, nitrobenzene, dimethylforamide, mesityl oxide, and tetrahydrofuran.[3,4]

The glass Coliwasa is used to sample all other containerized liquid wastes that cannot be sampled with the plastic Coliwasa except strong alkali and hydrofluoric acid solutions.

Procedure for Use

1. Choose the plastic or glass Coliwasa for the liquid waste to be sampled and assemble the sampler as shown in Figure 1.

2. Make sure that the sampler is clean (see Section 5).

3. Check to make sure the sampler is functioning properly. Adjust the locking mechanism if necessary to make sure the neoprene rubber stopper provides a tight closure.

4. Wear necessary protective clothing and gear and observe required sampling precautions (see Section 6).

5. Put the sampler in the open position by placing the stopper rod handle in the T-position and pushing the rod down until the handle sits against the sampler's locking block.

6. Slowly lower the sampler into the liquid waste. (Lower the sampler at a rate that permits the levels of the liquid inside and outside the sampler tube to be about the same. If the level of the liquid in the sampler tube is lower than that outside the sampler, the sampling rate is too fast and will result in a nonrepresentative sample).

7. When the sampler stopper hits the bottom of the waste container, push the sampler tube downward against the stopper to close the sampler. Lock the sampler in the close position by turning the T handle until it is upright and one end rests tightly on the locking block.

8. Slowly withdraw the sampler from the waste container with one hand while wiping the sampler tube with a disposable cloth or rag with the other hand.

9. Carefully discharge the sample into a suitable sample container (see Section 6) by slowly opening the sampler. This is done by slowly pulling the lower end of the T handle away from the locking block while the lower end of the sampler is positioned in a sample container.

10. Cap the sample container; attach label and seal; record in field log book; and complete sample analysis request sheet and chain of custody record.

11. Unscrew the T handle of the sampler and disengage the locking block. Clean sampler on site (see Section 5) or store the contaminated parts of the sampler in a plastic storage tube for subsequent cleaning. Store used rags in plastic bags for subsequent disposal.

12. Deliver the sample to the laboratory for analysis (see Section 6).

SOLID WASTE SAMPLERS

A number of tools are available for sampling solid substances. The most suitable of these for sampling hazardous solid wastes are the grain sampler, sampling trier, and the trowel or scoop.

Grain Sampler

The grain sampler (Figure 2) consists of two slotted telescoping tubes, usually made of brass or stainless steel. The outer tube has a conical, pointed tip on one end that permits the sampler to penetrate the material being sampled. The sampler is opened and closed by rotating the inner tube. Grain samplers are generally 61 to 100 cm (24 to 40 in.) long by 1.27 to 2.54 cm (½ to 1 in.) in diameter, and they are commercially available at laboratory supply houses.

Uses--

The grain sampler is used for sampling powdered or granular wastes or materials in bags, fiberdrums, sacks or similar containers. This sampler is most useful when the solids are no greater than 0.6 cm (¼ in.) in diameter.

Procedure for Use--

1. While the sampler is in the close position, insert it into the granular or powdered material or waste being sampled from a point near a top edge or corner, through the center, and to a point diagonally opposite the point of entry.[5]

2. Rotate the inner tube of the sampler into the open position.

3. Wiggle the sampler a few times to allow materials to enter the open slots.

4. Place the sampler in the close position and withdraw from the material being sampled.

5. Place the sampler in a horizontal position with the slots facing upward.

6. Rotate and slide out the outer tube from the inner tube.

7. Transfer the collected sample in the inner tube into a suitable sample container (see Section 6).

8. Collect two or more core samples at different points (see Section 6), and combine the samples in the same container.

9. Cap the sample container; attach label and seal; record in field log book; and complete sample analysis request sheet and chain of custody record.

10. Clean (see Section 5) or store the sampler in plastic bag for subsequent cleaning.

11. Deliver the sample to the laboratory for analysis (see Section 6).

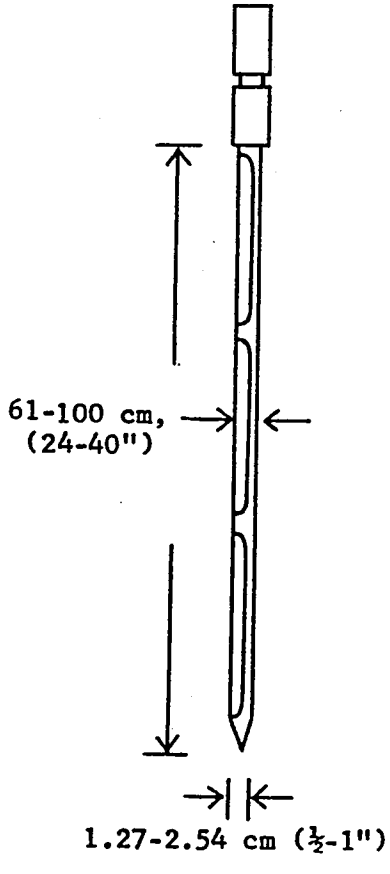

Figure 2. Grain sampler.

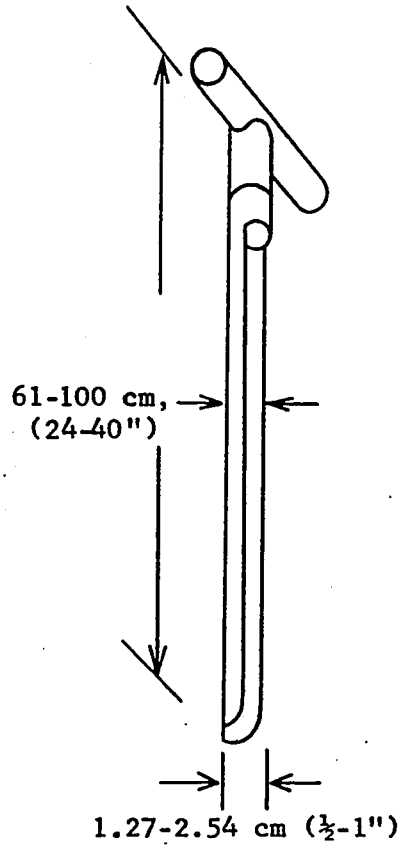

Figure 3. Sampling trier.

Sampling trier

A typical sampling trier (Figure 3) is a long tube with a slot that extends almost its entire length. The tip and edges of the tube slot are sharpened to allow the trier to cut a core of the material to be sampled when rotated after insertion into the material. Sampling triers are usually made of stainless steel with wooden handles. They are about 61 to 100 cm (24 to 40 in.) long and 1.27 to 2.54 cm (½ to 1 in.) in diameter. They can be purchased readily from laboratory supply houses.

Uses--

The use of the trier is similar to that of the grain sampler discussed above. It is preferred over the grain sampler when the powdered or

granular material to be sampled is moist or sticky.

In addition, the sampling trier can be used to obtain soft or loosened soil samples up to a depth of 61 cm(24 in.) as outlined below.

Procedure for Use--

1. Insert the trier into the waste material at a 0 to 45° angle from horizontal. This orientation minimizes the spillage of sample from the sampler. Extraction of samples might require tilting of the containers.

2. Rotate the trier once or twice to cut a core of material.

3. Slowly withdraw the trier, making sure that the slot is facing upward.

4. Transfer the sample into a suitable container (see Section 6) with the aid of a spatula and/or brush.

5. Repeat the sampling at different points (see Section 6). Two or more times and combine the samples in the same sample container.

6. Cap the sample container; attach the label and seal; record in field log book; and complete sample analysis request sheet and chain of custody record.

7. Wipe the sampler clean, or store it in a plastic bag for subsequent cleaning.

8. Deliver the sample to the laboratory for analysis (see Section 6).

Trowel or Scoop

A garden-variety trowel looks like a small shovel (Figure 4). The blade is usually about 7 by 13 cm(3 by 5 in.) with a sharp tip. A laboratory scoop is similar to the trowel, but the blade is usually more curved and has a closed upper end to permit the containment of material. Scoops come in different sizes and makes. Stainless steel or polypropylene scoops with 7 by 15-cm(2 3/4 by 6-in.) blades are preferred. A trowel can be bought from hardware stores; the scoop can be bought from laboratory supply houses.

Uses--

An ordinary zinc-plated garden trowel can be used in some cases for sampling dry granular or powdered materials in bins or other shallow containers. The laboratory scoop, however, is a superior choice. It is usually made of materials less subject to corrosion or chemical reactions, thus lessening the probability of sample contamination.

The trowel or scoop can also be used in collecting top surface soil samples.

Procedure for Use--

1. At regular intervals (see Section 6), take small, equal portions of sample from the surface or near the surface of the material to be sampled.

2. Combine the samples in a suitable container (see Section 6).

3. Cap the container; attach the label and seal; record in field log book; and complete sample analysis request sheet and chain of custody record.

4. Deliver the sample to the laboratory for analysis (see Section 6).

SOIL SAMPLERS

There is a variety of soil samplers used. For taking soil core samples, the scoop, sample trier, soil auger, and Veihmeyer sampler can be used. These samplers are commercially available and relatively inexpensive.

Scoop or Trowel

See the preceding section on solid waste samplers for the description of a scoop or trowel (Figure 4).

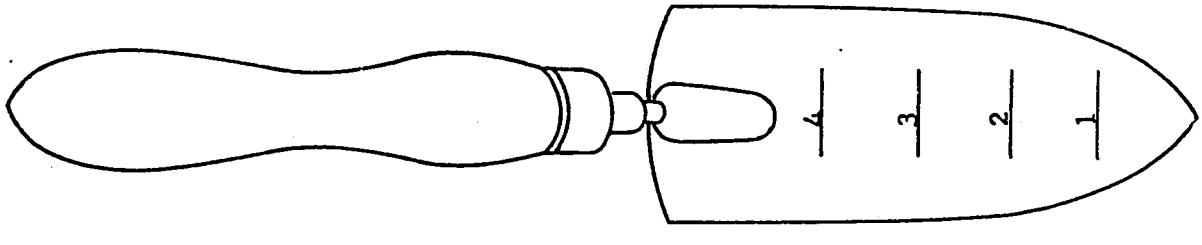

Figure 4. Trowel or scoop with calibrations.

Uses--

The scoop is used to collect soil samples up to 8 cm(3 in.) deep. It is simple to use, but identical mass sample units for a composite sample are difficult to collect with this sampler. The procedure for use of the scoop is outlined in the preceding section on solid waste samplers.

Sampling Trier

See the preceding section on solid waste samplers for the description of a sampling trier (Figure 3).

Uses--

This sampler can be used to collect soil samples at a depth greater than 8 cm(3 in.). The sampling depth is determined by the hardness and types of soil being sampled. This sampler can be difficult to use in stony, dry, very heavy, or sandy soil. The collected sample tends to be slightly compacted, but this method permits observation of the core sample before removal.[6]

Procedure for Use--

Procedure for use of the sampling trier can be found in the section on solid waste samplers.

Soil Auger

This tool consists of a hard metal central shaft and sharpened spiral blades (Figure 5). When the tool is rotated clockwise by its wooden T handle, it cuts the soil as it moves forward and discharges most of the loose soil upward. The cutting diameter is about 5 cm(2 in.). The length is about 1 m(40 in.), with graduations every 15.2 cm(6 in.). The length can be increased up to 2 m(80 in.). This tool can be bought from stores and, in some cases, from laboratory supply houses.

Uses--

The auger is particularly useful in collecting soil samples at depths greater than 8 cm(3 in.). This sampler destroys the structure of cohesive soil and does not distinguish between samples collected near the surface or toward the bottom. It is not recommended, therefore, when an undisturbed soil sample is desired.

Procedure for Use--

1. Select the sampling point (see Section 6) and remove unnecessary rocks, twigs, and other non-soil materials.

2. Install the sampler's wooden T handle in its socket.

3. Bore a hole through the middle of an aluminum pie pan large enough to allow the blades of the auger to pass through. The pan will be used to catch the sample brought to the surface by the auger.

4. Spot the pan against the selected sampling point.

5. Start augering through the hole in the pan until the desired sampling depth is reached.

6. Back off the auger and transfer the sample collected in the catch pan and the sample adhering to the auger to a suitable container (see Section 6). Spoon out the rest of the loosened sample with a sampling trier.

7. Repeat the sampling at different sampling points (see Section 6), and combine the samples in the same container as in step 6.

8. Cap the sample container; attach label and seal; record in field log book; and complete sample analysis request sheet and chain of custody record.

9. Brush off and wipe the sampler clean, or store it in a plastic bag for subsequent cleaning.

10. Deliver the sample to the laboratory for analysis (see Section 6).

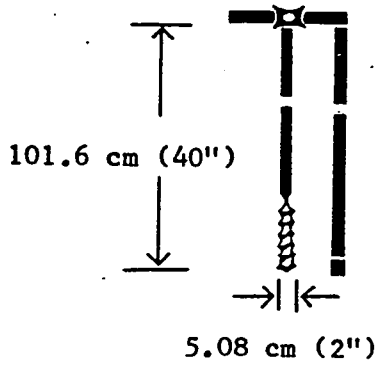

Figure 5. Soil auger.

A. Drive hammer

B. Head

C. Tube

D. Point

Standard point

Constricted point

Bulge point

Special point

Point types

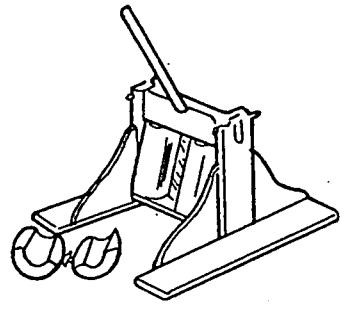

Puller jack and grip

Figure 6. Veihmeyer sampler

Veihmeyer Soil Sampler

This sampler was developed by Professor F.J. Veihmeyer of the University of California in Davis.[7] The parts of a basic sampler and the corresponding costs are given in Table 1, and the basic sampler is shown in Figure 6.

TABLE 1. BASIC PARTS AND COSTS OF A VEIHMEYER SOIL SAMPLER

Part[a]	Cost[b]
Tube, 1.5 m (5 ft.)	$ 50.40
Tube, 3 m (10 ft.)	84.75
Tip, type A, general use	25.80
Drive head	29.05
Drop hammer, 6.8 kg (15 lb.)	71.85
Puller jack and grip[c]	161.90
Total	$ 433.75

[a] Only one of each part is needed. They are manufactured by Hansen Machine Works, 334 N. 12th Street, Sacramento, CA 95815.

[b] Based on August 1, 1977, price list.

[c] Recommended for deep soil sampling.

The tube is chromium-molybdenum steel and comes in various standard lengths from 0.91 to 4.9 m(3 to 16 ft.) and calibrated every 30.48 cm(12 in.). Longer tubes can be obtained on special order. Different points (Figure 6) are also available for different types of soil and sampling. Each point is shaped to penetrate specific types of soil without pushing the soil ahead of it, thus preventing the core from compacting in the tube. The standard point is adequate for most general sampling purposes. The inside taper of each point is designed to keep the sample from being sucked out of the tube as it is pulled from the ground. The drive head protects the top of the tube from deforming when the tube is driven into the ground with the drive hammer. The hammer doubles as a drive weight and handle when pulling the sampler from the ground. When the sampler tube cannot be pulled easily from the ground, a special puller jack and grip

are also available. Specifications for the various parts of the Veihmeyer sampler are given as follows:

Points	Chrome-molly steel, heat-treated. Includes a standard point for general use, a constricted point for deep sampling in heavy clay (keeps core from being sucked out of the tube), a bulge point for shallow sampling in heavy clay, and a special point for dry sand. (See Figure 6D).
Drive hammer . .	Standard weight is 6.8 kg (15 lb.). (See Figure 6A)
Tubes . .	Chrome-molly steel. Maximum length is 4.9 m (16 ft.). (See Figure 6C).
Head . .	Chrome-molly steel, heat-treated. (See Figure 6B).
Puller jack . .	Cast aluminum frame with steel roller assembly and handle.
Grip . .	Chrome-molly steel, heat-treated.

Uses--

The Veihmeyer sampler is recommended for core sampling of most types of soil. It may not be applicable to sampling stony, rocky, or very wet soil.

Procedure for Use--

1. Assemble the sampler by screwing in the tip and the drive head on the sampling tube.

2. Insert the tapered handle (drive guide) of the drive hammer through the drive head.

3. Place the sampler in a perpendicular position on the soil to be sampled.

4. With the left hand holding the tube, drive the sampler into the ground to the desired sampling depth by pounding the drive head with the drive hammer. Do not drive the tube further than the tip of the hammer's drive guide.

5. Record the length of the tube that penetrated the ground.

6. Remove the drive hammer and fit the keyhole-like opening on the flat side of the hammer onto the drive head. In this position, the hammer serves as a handle for the sampler.

7. Rotate the sampler at least two revolutions to shear off the sample at the bottom.

8. Lower the sampler handle (hammer) until it just clears the two ear-like protrusions on the drive head and rotate about 90°.

9. Withdraw the sampler from the ground by pulling the handle (hammer) upwards. When the sampler cannot be withdrawn by hand, as in deep soil sampling, use the puller jack and grip.

10. Dislodge the hammer from the sampler; turn the sampler tube upside down; tap the head gently against the hammer; and carefully recover the sample from the tube. The sample should slip out easily.

11. Store the core sample, preferably, in a rigid, transparent, or translucent plastic tube when observation of soil layers is to be made. The use of the tube will keep the sample relatively undisturbed. In other cases, use a 1000-or 2000-ml (1-qt. or ½-gal) sample container (see Section 6) to store the sample.

12. Collect additional core samples at different points (see Section 6).

13. Label the samples; affix the seals; record in the field log book; complete analysis request sheet and chain of custody record; and deliver the samples to the laboratory for analysis (see Section 6).

Waste Pile Sampler

A waste pile sampler (Figure 7) is essentially a large sampling trier. It is commercially available, but it can be easily fabricated from sheet metal plastic pipe. A polyvinyl chloride plumbing pipe 1.52 m(5 ft) long by 3.2 cm(1¼ in.) I.D. by 0.32 cm(1/8 in.) wall thickness is adequate. The pipe is sawed lengthwise (about 60/40 split) until the last 10 cm(4 in.) The narrower piece is sawn off and hence forms a slot in the pipe. The edges of the slot and the tip of the pipe are sharpened to permit the sampler to cut into the waste material being sampled. The unsplit length of the pipe serves as the handle. The plastic pipe can be purchased from hardware stores.

Uses--

The waste pile sampler is used for sampling wastes in large heaps with cross-sectional diameters greater than 1 m(39.4 in.). It can also be used for sampling granular or powdered wastes or materials in large bins, barges, or silos where the grain sampler or sampling trier is not long enough. This sampler does not collect representative samples when the diameters of the solid particles are greater than half the diameter of the tube.

Procedure for Use--

1. Insert the sampler into the waste material being sampled at 0 to 45° from horizontal.

2. Rotate the sampler two or three times in order to cut a core of the material.

3. Slowly withdraw the sampler, making sure that the slot is facing upward.

4. Transfer the sample into a suitable container (see Section 6) with the aid of a spatula and/or brush.

5. Repeat the sampling at different sampling points (see Section 6) two or more times and combine the samples in the same sample container in step 4.

6. Cap the container; attach label and seal; record in field log book; and complete sample analysis request sheet and chain of custody record.

7. Wipe the sampler clean or store it in a plastic bag for subsequent cleaning.

8. Deliver the sample to the laboratory for analysis (see Section 6).

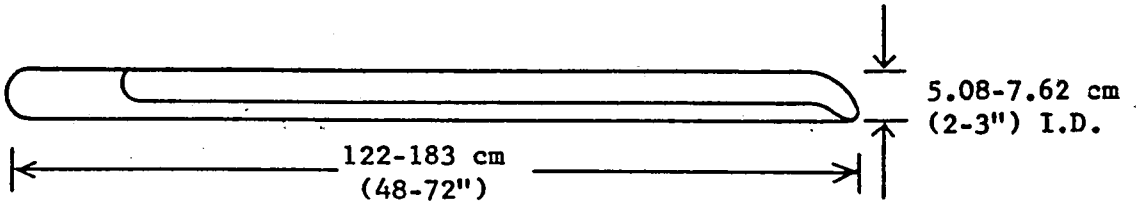

Figure 7. Waste pile sampler.

Pond Sampler

The pond sampler (Figure 8) consists of an adjustable clamp attached to the end of a two or three piece telescoping aluminum tube that serves as the handle. The clamp is used to secure a sampling beaker. The sampler is not commercially available, but it is easily and inexpensively fabri-

cated. The tubes can be readily purchased from most hardware or swimming pool supply stores. The adjustable clamp and sampling beaker can be obtained from most laboratory supply houses. The materials required to fabricate the sampler are given in Table 2.

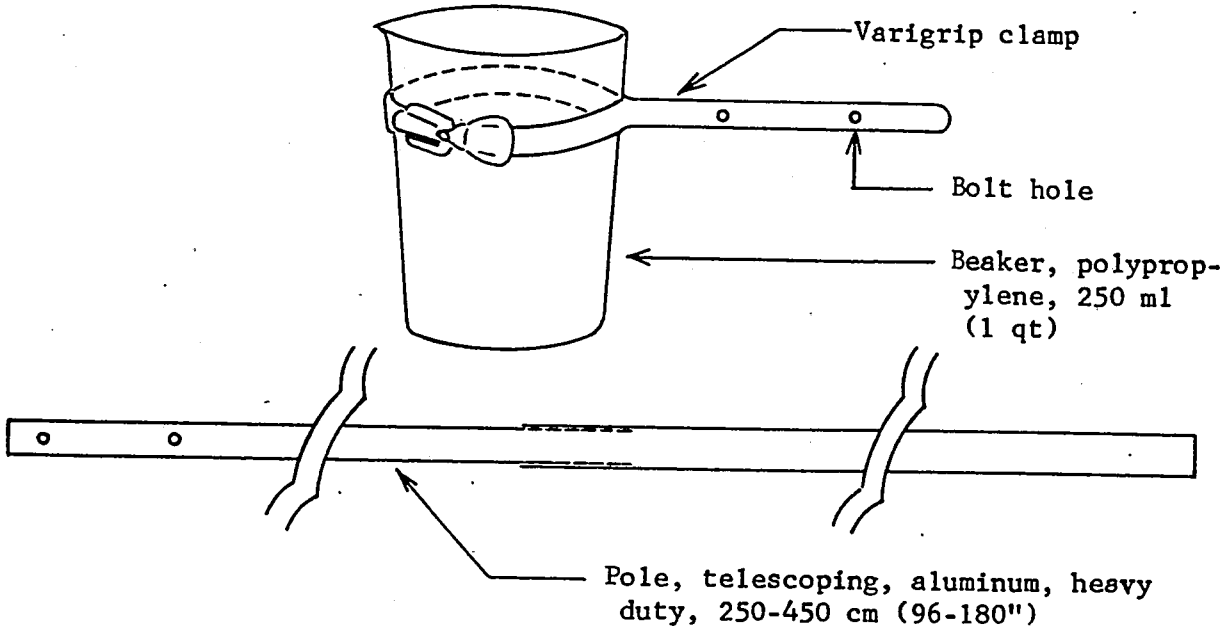

Figure 8. Pond sampler.

TABLE 2. BASIC PARTS AND APPROXIMATE COSTS OF A POND SAMPLER

Quantity	Item	Supplier	Approximate Cost
1	Clamp, adjustable, 6.4 to 8.9 cm(2½ to 3½ in.) for 250-to 600-ml(½ to 1½-pt.) beakers	Laboratory supply houses	$ 7.00
1	Tube, aluminum, heavy duty, telescoping extends 2.5 to 4.5 m(8 to 15 ft.) with joint cam locking mechanism. Pole diameters 2.54 cm(1 in.) I.D. and 3.18 cm(1¼ in.) I.D.	Olympic Swimming Pool Co. 807 Buena Vista Street, Alameda, Calif. 94501 or other general swimming pool supply houses.	16.24
1	Beaker, polypropylene, 250-ml(½ pt.)	Laboratory supply houses.	1.00
4	Bolts, 6.35 by 0.64 cm(2¼ by ¼ in.) NC	Hardware stores	.20
4	Nuts, 0.64 cm(¼ in.) NC	Hardware stores	.20
	Total		$24.64

Uses--

The pond sampler is used to collect liquid waste samples from disposal ponds, pits, lagoons, and similar reservoirs. Grab samples can be obtained at distances as far as 3.5 m(11½ ft) from the edge of the ponds. The tubular aluminum handle may bow when sampling very viscous liquids if sampling is not done slowly.

Procedure for Use--

1. Assemble the pond sampler. Make sure that the sampling beaker and the bolts and nuts that secure the clamp to the pole are tightened properly.

2. With proper protective garment and gear (see Section 6), take grab samples from the pond at different distances and depths (see Section 6).

3. Combine the samples in one suitable container (see Section 6).

4. Cap the container; label and affix the seal; record in field log book; and complete sample analysis request sheet and chain of custody record.

5. Dismantle the sampler; wipe the parts with terry towels or rags and store them in plastic bags for subsequent cleaning. Store used towels or rags in garbage bags for subsequent disposal.

6. Deliver the sample to the laboratory for analysis (see Section 6).

Weighted Bottle Sampler

This sampler (Figure 9) consists of a bottle, usually glass, a weight sinker, a bottle stopper, and a line that is used to open the bottle and to lower and raise the sampler during sampling. There are a few variations of this sampler, as illustrated in the ASTM Methods D 270[8] and E 300[9]. The ASTM sampler, which uses a metallic bottle basket that also serves as weight sinker, is preferred. The weighted bottle sampler can either be fabricated or purchased.

Uses--

The weighted bottle sampler can be used to sample liquids in storage tanks, wells, sumps, or other containers that cannot be adequately sampled with a Coliwasa. The sampler cannot be used to collect liquids that are incompatible or that react chemically with the weight sinker and line.

Procedure for use--

1. Assemble the weighted bottle sampler as shown in Figure 9.

2. Using protective sampling equipment, in turn, lower the sampler to proper depths to collect the following samples:

   a) upper sample - middle of upper third of tank contents.
   b) middle sample - middle of tank contents.
   c) lower sample - near bottom of tank contents.

3. Pull out the bottle stopper with a sharp jerk of the sampler line.

4. Allow the bottle to fill completely, as evidence by the cessation of air bubbles.

5. Raise the sampler and retrieve and cap the bottle. Wipe off the outside of the bottle with a terry towel or rag. The bottle can serve as the sample container.

6. Label each of the three samples collected; affix seal; fill out sample analysis request sheet and chain of custody record; record in the field log book.

7. Clean onsite or store contaminated sampler in a plastic bag for subsequent cleaning.

8. Deliver the sample to the laboratory for analysis (see Section 6). Instruct the laboratory to perform analysis on each sample or a composite of the samples.

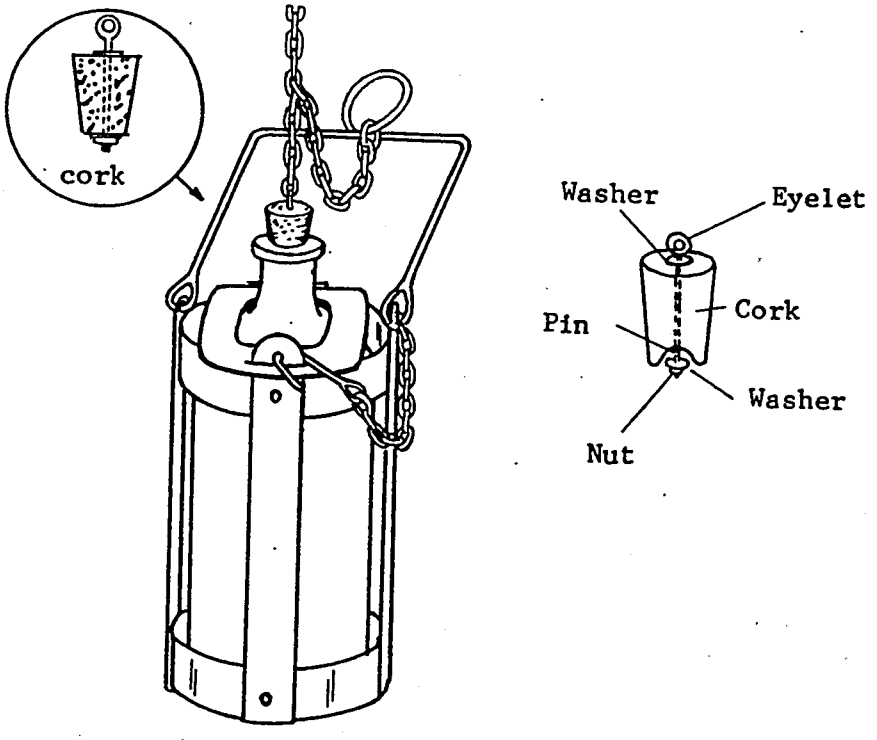

1000-ml (1-quart) weighted bottle catcher

Figure 9. Weighted bottle sampler.