St. Louis (Ex) Ordnance
MO8210022465
Break: 1.3
Other: 5-1-01

FINAL REPORT
LIMITED SUBSURFACE SOIL AND GROUNDWATER PHASE II ENVIRONMENTAL SITE INVESTIGATION PENTAIR, INC./LINCOLN INDUSTRIAL ONE LINCOLN WAY ST. LOUIS, MISSOURI

Prepared for

PENTAIR, INC.
St. Paul, Minnesota

Prepared by

ENVIRON International Corporation
St. Peters, Missouri

May 2001

40248305
SUPERFUND RECORDS

```
##########################################################################################
##########################################################################################
##
##                          DataSite: The Repository Batch Print Job
##
##########################################################################################
##########################################################################################

  Job Name  : Phase II Environmental Site Investigation, Pentair, Inc./Lincoln Industrial, St. L
  User Name : acooper
  Date      : 11/4/2004 11:55:34 AM
```

Document Cover Sheet

Doc_Index_Num : Q.7.
TITLE : Phase II Environmental Site Investigation, Pentair, Inc./Lincoln Industrial, St. Louis, Missouri, May 2001

FINAL REPORT
LIMITED SUBSURFACE SOIL AND GROUNDWATER PHASE II ENVIRONMENTAL SITE INVESTIGATION PENTAIR, INC./LINCOLN INDUSTRIAL ONE LINCOLN WAY ST. LOUIS, MISSOURI

Prepared for

PENTAIR, INC.
St. Paul, Minnesota

Prepared by

ENVIRON International Corporation
St. Peters, Missouri

May 2001

FINAL REPORT
LIMITED SUBSURFACE SOIL AND GROUNDWATER PHASE II ENVIRONMENTAL SITE INVESTIGATION PENTAIR, INC./LINCOLN INDUSTRIAL ONE LINCOLN WAY ST. LOUIS, MISSOURI

Prepared for

PENTAIR, INC.
St. Paul, Minnesota

Prepared by

ENVIRON International Corporation
St. Peters, Missouri

ENVIRON International Corporation Job No. 21-9588A
May 10, 2001

TABLE OF CONTENTS

1.0 INTRODUCTION 1

2.0 SUBSURFACE INVESTIGATION ACTIVITIES 2

2.1 Initial Subsurface Investigation 2
2.2 Supplemental Subsurface Investigation 4
2.2.1 Southwest Corner of the Facility 4
2.2.2 Groundwater Impact in Central Portion of Site 5
2.2.3 Building #13 Wood Block Floor 6
2.2.4 Building #8 Machining Area 6
2.2.5 Building #7 Hazardous Waste Storage Area 7

3.0 FIELD OBSERVATIONS 8

3.1 Geology 8
3.2 Hydrogeology 9

4.0 DISCUSSION OF RESULTS 10

4.1 Groundwater Elevations 10
4.2 Analytical Results 10
4.2.1 Soil Samples 11
4.2.2 Groundwater Samples 13
4.2.3 Wood Block Floor Samples 14

5.0 CONCLUSIONS AND RECOMMENDATIONS 15

TABLES

Table 1A Water Level Record – Monitoring Wells
Table 1B Water Level Record – Temporary Monitoring Wells
Table 2 Soil Sampling Results – Volatile Organic Compounds
Table 3 Soil Sampling Results – Total Petroleum Hydrocarbons (OA2)
Table 4 Soil Sampling Results – Total RCRA Metals and PCBs
Table 5 Groundwater Sampling Results – Volatile Organic Compounds
Table 6 Groundwater Sampling Results – Total Petroleum Hydrocarbons (OA2)
Table 7 Groundwater Sampling Results – Total RCRA Metals

FIGURES

Figure 1 Site Location Map
Figure 2 Site Layout Map
Figure 3A Approximate Monitoring Well and Geoprobe Locations
Figure 3B Surveyed Monitoring Well and Temporary Monitoring Well Locations
Figure 4 Shallow Groundwater Potentiometric Map

APPENDICES

Appendix A Soil Boring Logs
Appendix B Monitoring Well Construction Diagrams
Appendix C Laboratory Analytical Data Sheets

1.0 INTRODUCTION

This report has been prepared by ENVIRON International Corporation (ENVIRON) to summarize the field activities and analytical results from the Phase II limited subsurface soil and groundwater investigation performed by URS/Dames & Moore (D&M) at the Lincoln Industrial facility (site) located in St. Louis, Missouri in November 1999 and February 2000. This report is based upon the draft summary report prepared by D&M and dated February 18, 2000, which was apparently never finalized or issued. This limited investigation was conducted in two mobilizations to evaluate the nature and extent of any impact associated with present or historical on-site activities, as well as any potential impact from off-site sources, as identified in the Phase I Environmental Site Assessment (ESA) previously performed by D&M.

D&M performed the ESA of the subject property in October 1999 and documented the results in a report dated December 3, 1999. Potential areas of impact to soil and/or groundwater from petroleum hydrocarbons, volatile organic compounds, PCBs, or other compounds were noted due to the long time usage of oils, solvents and other hazardous materials in various locations throughout the subject property, and the unknown historic management and housekeeping practices associated with hazardous substances and hazardous wastes. In addition, the site is located within a historically industrial area and the industrial activities of hydraulically upgradient properties could not be discounted.

The following report summarizes D&M's soil and groundwater sampling activities and laboratory analytical results. ENVIRON's evaluation and conclusions are based solely on the D&M data and observations. Figures, boring logs and well construction diagrams as prepared by D&M, are attached to this report.

2.0 SUBSURFACE INVESTIGATION ACTIVITIES

The Phase II Environmental Site Investigation (ESI) was conducted at the site over two mobilizations. The initial phase consisted of installing seven groundwater monitoring wells to assess groundwater conditions across the site. The second phase of the investigation was performed in an attempt to further define the impact identified during the initial mobilization.

2.1 Initial Subsurface Investigation

The initial phase of the investigation began on November 22, 1999, and comprised the installation of seven groundwater monitoring wells, designated MW-1 through MW-7. Two of the monitoring wells were installed in the vicinity of the machining and plating operations (MW-1 and MW-2, respectively) with the remainder of the wells installed around the perimeter of the site. The locations of the monitoring wells are shown on Figures 2 and 3.

Drilling was performed by Roberts Environmental Drilling, Inc. (Roberts), of Milstadt, Illinois. Each monitoring well was advanced using conventional drilling techniques until the first saturated zone was encountered or auger refusal, whichever occurred first. The borings were advanced using 4¼-inch hollow-stem augers and soil samples were continuously collected with a 5-foot long decontaminated split-barrel sampler, until a depth of 10 feet past initial groundwater was reached. Each soil sample was screened using a photoionization detector (PID) and was visually evaluated for evidence of impact. The soil interval from each boring exhibiting the highest PID screening level and/or evidence of staining was submitted to the laboratory for analysis. Each soil boring was logged in accordance with the unified soil classification system (USCS). Soil boring logs are provided in Appendix A.

Following the termination of each soil boring, the borings were converted to groundwater monitoring wells designated MW-1 through MW-7. The total depths of the wells range from 15 to 56.5 feet below ground surface (bgs). The wells were installed using two-inch diameter polyvinyl chloride (PVC) riser pipe and 0.010-inch slotted well screen. The screen lengths were 10-feet in all wells except MW-1 and MW-5; the screens in these wells are 8-feet and 15-feet long, respectively. A silica sand filter pack extends from the base of the well to approximately two feet above the screen. A hydrated bentonite seal was placed in the annulus space above the filter pack and extended to approximately two feet bgs in all wells except MW-5, which was constructed with a three-foot thick seal and was grouted to approximately two feet bgs with a high solids bentonite grout. The surface completions at the monitoring wells included concrete and flush-mount well covers. All wells were completed and registered with the Missouri

Department of Natural Resources Division of Geology and Land Survey in accordance with the Missouri Well Construction Code. Well completion diagrams are provided in Appendix B.

Upon completion, each well was developed using a submersible pump. Development of all seven monitoring wells continued until a minimum of five well volumes of water were removed from the well, the well was purged dry a minimum of three times, or the well was purged until the development water was free of suspended sediment and was essentially non-turbid. This involved the removal of up to 20 gallons of groundwater from each well. Monitoring well development water was containerized in 55-gallon drums for proper future disposal.

After installation and development, all seven monitoring wells were allowed to recharge and come to equilibrium. Groundwater elevations were then measured to the nearest 1/100 foot in the seven monitoring wells using an electronic water level indicator. The groundwater elevations, screened intervals, and total monitoring well depth are summarized in Table 1. The groundwater elevations were used to generate the groundwater elevation contour map (Figure 4).

Each well was then purged with a submersible pump until a minimum of three well volumes of water had been removed or the well was purged dry. After the well had recharged sufficiently, groundwater samples were collected using a dedicated, disposable, polyethylene bailer. The bailer was attached to a new poly-rope and lowered slowly into the well to minimize agitation of the standing water. Samples were transferred from the bailer to the sample containers in a manner as to minimize agitation and aeration. Personnel conducting the groundwater sampling wore clean disposable latex gloves.

All of the soil and groundwater samples were analyzed for total petroleum hydrocarbons (TPH) by USEPA SW-846 Method 8015 (OA1/OA2), volatile organic compounds (VOCs) by USEPA SW-846 Method 8260, and metals by USEPA SW-846 Method 6010/7470. The VOC groundwater samples were placed in clean laboratory supplied 40-milliliter glass volatile organic analyses (VOA) vials with teflon septa. The vials were placed in sealed plastic bags and placed on ice in coolers and securely packed to protect against damage. The coolers were hand delivered to the American Technical and Analytical Services laboratory (ATAS) under proper Chain-of-Custody (COC).

2.2 Supplemental Subsurface Investigation

Based on the results of the initial mobilization, D&M attempted to further evaluate nature and extent of identified impacts by conducting an additional subsurface investigation beginning February 4, 2000. The investigation activities centered around one area of soil impact and two areas of groundwater impact identified during the initial investigation. In addition, three areas that were not addressed in the initial work were included in this supplemental investigation.

2.2.1 Southwest Corner of the Facility

Monitoring well MW-1 was installed southeast of Building #6. During the advancement of the boring for MW-1, stained soil was observed from approximately 3½ feet to 9 feet bgs. The soil sample collected from within this interval contained a TPH concentration of over 39,000 ppm. In addition, low concentrations of benzene and trichloroethene (TCE) were detected in the groundwater obtained from this monitoring well.

D&M advanced 13 GeoProbe® borings to better define the extent of the impact observed during the installation of MW-1. Four borings (GP-1 through GP-4) were advanced inside Building #6, two borings (GP-5 and GP-6) were advanced inside Building #4, six borings (GP-7 through GP-12) were advanced in the alley to the west of Buildings #4 and #6 and one boring (GP-13) was advanced south of the southwest corner of Building #6. The locations of the GeoProbe® borings are shown on Figure 3A.

A decontaminated, acetate lined, stainless steel, macro-core sampling tube (2-inch diameter by 4-foot long) was hydraulically driven into the ground at the sampling locations. The 13 probes were advanced to depths ranging from 16 feet to 24 feet bgs. The tube was retrieved to the surface and the soil samples removed from the disposable acetate liner within the tube. Soil samples were continuously collected during advancement of each probe. Each soil sample was screened using a photoionization detector (PID) and was visually evaluated for evidence of impact. The soil sample from the interval exhibiting the highest PID screening level and/or evidence of staining and a soil sample from a lower depth that did not exhibit PID measurements or staining were submitted to the laboratory for analysis.

All sampling equipment was decontaminated prior to implementation and between boring and/or sampling locations in order to minimize the potential for cross contamination of samples. Decontamination consisted of an Alconox detergent and tap water wash and a tap water rinse. Upon completion of field activities, the soil borings not completed as temporary wells were

backfilled to just below surface grade using bentonite pellets, which were hydrated to ensure a proper seal. The remainder of each boring was filled to surface grade to match the existing surface conditions.

Upon completion of probes GP-2, GP-3, GP 6 and GP-9 through GP-12, a temporary piezometer was installed in each for the collection of a groundwater sample for analysis. The temporary piezometers were constructed in a manner similar to the monitoring wells, and all piezometers were constructed with 10-foot long well screens. However, the filter sand packs in the piezometers extend above the well screen to various distances ranging from 2 to 11 feet. The seven temporary piezometers were developed using a ½ - inch polyethylene single check valve bailer to purge each piezometer until dry. The piezometers were each sampled when they had recharged, following protocol described above for the monitoring wells. Development water was containerized in 55-gallon drums for proper future disposal.

All of the soil and groundwater samples were handled using the same protocol described above. The samples were delivered to ATAS and analyzed for VOCs, TPH and metals.

2.2.2 *Groundwater Impact in Central Portion of Site*

Monitoring wells MW-2 and MW-7 were installed during the initial investigation north and south of building #13, respectively. TCE and cis-1,2-dichlorocthene (cis-DCE) were detected at low concentrations in MW-2 and TCE was detected at a low concentration in MW-7.

As part of the second mobilization, D&M installed three new monitoring wells (MW-8, MW-10 and MW-11) north Building #13 and one new monitoring well (MW-9) south of Building #13 to further evaluate the groundwater impact observed in monitoring wells MW-2 and MW-7. During the advancement of each well boring, soil samples were screened using a PID and visually evaluated for evidence of impact. There was no visual or olfactory evidence of soil impact observed during drilling, and no evidence of impact was indicated by the PID. Therefore, no soil samples were submitted from any of these four new monitoring wells.

The borings were converted to groundwater monitoring wells with total depths of 35, 23, 33, and 36 feet bgs for MW-8, MW-9, MW-10 and MW-11, respectively. Each monitoring well was completed using the same protocol described above for monitoring wells MW-1 through MW-7.

Upon completion, each well was developed using a submersible pump. Development of all four monitoring wells continued until each well was purged dry a minimum of three times.

Monitoring well development water was containerized in 55-gallon drums for proper future disposal.

After installation and development activities were completed, each monitoring well was allowed to recharge and then gauged and sampled following the protocol described above. The groundwater samples were delivered to ATAS and analyzed for VOCs and metals.

2.2.3 Building #13 Wood Block Floor

Building #13 is a former DOD facility that has historically been used for machining operations. The majority of the building is covered with wood block flooring that has been stained with hydraulic and cutting oils. D&M collected three samples of wood shavings from the floor, placed them in laboratory supplied sample jars and hand delivered them to ATAS. The shavings were analyzed for polychlorinated biphenyls (PCBs) by USEPA SW846 Method 8082, since PCBs have historically been used in hydraulic oils.

2.2.4 Building #8 Machining Area

D&M advanced one soil boring along the southeast corner of Building #8 to determine if machine operations from inside the building have impacted the surrounding soil and/or groundwater. The soil boring was advanced using the same protocol as previously described. The soil samples were continuously collected using a split spoon sampler during advancement. Each soil sample was screened using a PID and was visually evaluated for evidence of impact. The soil interval from the boring exhibiting the highest PID screening level and/or evidence of staining and a soil sample from the soil interval beneath the area of impact were submitted to the laboratory for analysis.

Following the termination of the soil boring, the boring was converted to a groundwater monitoring well (MW-12). The total depth of the well is 41.5 feet bgs. The monitoring well was completed using the same protocol described above for monitoring wells MW-1 through MW-7. The monitoring well development and sampling was accomplished using the same protocol describe above for monitoring wells MW-8 through MW-11. Both the soil and groundwater samples were delivered to ATAS and analyzed for VOCs, TPH and metals.

2.2.5 *Building #7 Hazardous Waste Storage Area*

D&M installed two GeoProbe® borings south of Building #7 to determine if the hazardous wastes that were historically stored in this building have impacted the surrounding soil and groundwater. The two borings were advanced using the same protocol as previously described. Soil samples were continuously collected during advancement of each probe. Each soil sample was screened using a PID and was visually evaluated for evidence of impact. The soil sample from the interval exhibiting the highest PID screening level and/or evidence of staining and the soil sample from the next lower interval were submitted to the laboratory for analysis.

Each of these boring was then converted to a temporary piezometer (GP-14 and GP-15). The total depths of the two piezometers were 27 feet and 28 feet bgs, respectively. The temporary piezometers were completed using the same protocol described above for piezometers; however, GP-15 was damaged during installation and neither a groundwater elevation nor a groundwater sample could be obtained. The soil and groundwater samples from GP-14 and GP-15 were delivered to ATAS and analyzed for VOCs, TPH and metals.

3.0 FIELD OBSERVATIONS

3.1 Geology

The topography of the site follows a general slope to the south/southeast. The surface consists of either asphalt or concrete parking lots and walk-ways surrounding the 16 buildings. The north and east perimeter of the site slopes to the south/southeast and consists mainly of grass-covered fields. The south and west perimeters are bordered by industrial properties. Areas of the property north of Lincoln Way not identified as parking areas are grass covered. Areas east of Buildings 13, 14 and 17 are generally grass and gravel covered.

Below the surface cover is a layer of fill material consisting of crushed limestone, sand, silty clay, concrete and bricks. The fill material ranges in thickness from 1.5 feet to 8 feet.

Underlying the fill layer is a layer of mostly brown and gray mottled (natural) silty clay that contains discontinuous silt or gravelly clay lenses or seams. This ranges in thickness from 11 feet to 42 feet. Eight of the twelve monitoring wells (MW-1 through MW-3, MW-5 through MW-8 and MW-10) are screened within the discontinuous silt or gravelly clay seams. Of these, MW-5, MW-7 and MW-10 were drilled to auger refusal and screened at the bottom of the borings.

Underlying the silty clay, either a layer of yellowish brown shaley clay is encountered or there is auger refusal, which is assumed to be bedrock. Rock coring was not performed to confirm the presence of bedrock, but the depth of refusal is consistent with bedrock confirmed at nearby locations. Two monitoring wells (MW-11 and MW-12) are screened at the bottom of borings in which auger refusal was encountered. Silt or gravelly clay seams were not identified in these wells.

Silt or gravelly clay seams were also not identified in borings for MW-4 and MW-9. MW-4 was advanced to auger refusal at 31 feet below surface; however, MW-9 was advanced to 32 feet bgs. The borings for MW-4 and MW-9 were then partially backfilled with bentonite to 22 and 23 feet below surface, respectively, before the monitoring wells were constructed.

Based upon existing data, the subsurface appears to be complicated by the partial erosion of the yellowish brown shaley clay and the deposition of silty clay with the discontinuous silt and clayey gravel seams. Additional investigation would be necessary to fully characterize the site subsurface.

The boring log for each monitoring well and GeoProbe® is provided in Appendix A.

3.2 Hydrogeology

There appear to be two groundwater bearing zones at the site, based on available information. The first groundwater bearing zone is within discontinuous silt or gravelly clay seams that are present across a majority of the site. MW-1 through MW-3, MW-5 through MW-8 and MW-10 are screened within silt or gravelly clay seams that yield water. The water bearing silt or gravely clay seams appear to be perched and are discontinuous as demonstrated by the boring logs for monitoring wells MW-10 and MW-11. MW-2 and MW-6 provide sufficient water such that the wells could not be purged dry when sampled. All other wells screened in the first water bearing zone purged dry after removal of approximately two to three well volumes. With respect to the wells screened within silt or gravelly clay seams, the borings for MW-5, MW-7 and MW-10 were advanced to auger refusal and the base of the well screen is positioned at the presumed surface of rock. Auger refusal was encountered at 56.5, 33 and 33 feet bgs, in MW-5, MW-7 and MW-10, respectively. Water in these three wells is obtained from the discontinuous silt and gravelly clay seams, as well as from water perched at the surface of presumed bedrock.

The GeoProbe® piezometers installed at the southwest corner of the site are screened at depths corresponding to the first water bearing zone; however, only two of the eight piezometers are screened within discontinuous silt or gravelly clay seams (GP-10 and GP-14). The remaining six piezometers are screened within soil described as clay.

The second water bearing zone provides little if any water, and is present at the surface of bedrock, which was assumed to be encountered at the depth of auger refusal. Auger refusal was encountered at 31, 36 and 41.5 feet bgs, in MW-4, MW-11 and MW-12, respectively. MW-11 and MW-12 are constructed to the surface of bedrock. Silt or gravelly clay seams were not identified in either of these continuously sampled borings. Silt or gravelly clay seams were also not identified in the borings for MW-4 and MW-9, but each of these borings were backfilled with bentonite and are screened from 12 to 22 feet and 13 to 23 feet bgs, respectively. The boring for MW-9 was not, however, advanced to auger refusal. MW-4 and MW-11 produced very little water and were purged dry after removal of approximately two well volumes. MW-9 and MW-12 were dry when measured in February 2000.

4.0 DISCUSSION OF RESULTS

4.1 Groundwater Elevations

The piezometric level in the first water bearing zone ranged from approximately 1.2 to 35.5 feet bgs in February 2000; corresponding to a range in elevation of approximately 488.6 to 464.4 (an arbitrary site datum of 500 feet was set at the base of the flagpole in front of the office at One Lincoln Way). The groundwater flow direction in the discontinuous silt and gravelly clay seams is generally southeast. Figure 4 depicts the groundwater flow direction based upon existing data. Further assessment of the location of underground utilities and structures (tunnels and pipe chases between buildings) and additional groundwater level measurements are necessary to further define the groundwater flow direction. For instance, the water levels in some of the monitoring wells and piezometers were measured within four days of installation. These wells and piezometers may have required several weeks to reach a static water level, as was the case with MW-4.

The piezometric level in the second water bearing zone ranged from approximately 6.0 to greater than 41.5 feet bgs in February 2000; corresponding to an elevation of approximately 465.4 to 470.6. MW-12 was dry in February 2000. Again, the water levels may not have reached a static water level when measurements were recorded. Insufficient data is available to assess the groundwater flow direction in wells solely monitoring perched water on the surface of presumed bedrock. Groundwater elevation data are summarized in Table 1.

4.2 Analytical Results

Soil and groundwater analytical results for both phases of the investigation are summarized in Tables 2 through 7. Laboratory analytical results for soil are provided in Tables 2 (volatile organic compounds), 3 (total petroleum hydrocarbons) and 4 (RCRA metals). Laboratory analytical results are for groundwater are provided in Tables 5 (volatile organic compounds), 6 (Total Petroleum Hydrocarbons), and 7 (RCRA metals). Laboratory analytical reports and chain of custody documentation are provided in Appendix B.

4.2.1 Soil Samples

Soil samples collected during both phases of this subsurface investigation exhibited the following constituents above the laboratory reporting limits: total xylenes; ethylbenzene; 1,2,4-trimethylbenzene; isopropylbenzene; n-propylbenzene; p-isopropyltoluene; n-butylbenzene; sec-butylbenzene; 1,3,5-trimethylbenzene; napthalene; benzene; cis-DCE; TCE; methlyene chloride (MeCl); acetone; vinyl chloride; arsenic; barium; cadmium; chromium; lead; mineral spirits and degraded forms of mineral spirits, motor oil and hydraulic fluid.

The analytical results for the soil samples were compared to the Leaching to Groundwater (C_{Leach}) Soil Target Concentrations (STARC) published in the Missouri Department of Natural Resources (MDNR) Cleanup Action Levels for Missouri (CALM) guidance document dated September 1998. CALM does not provide C_{Leach} values for TPH, arsenic or lead. For these constituents, the laboratory analytical results were compared to the Scenario C (industrial facilities) standards in the CALM guidance document

Volatile Organic Compounds

Methylene chloride was detected in all of the soil samples and in some instances exceeded the C_{Leach} value. However, MeCl was also detected in the method blank and it is a common laboratory artifact. Consequently, the presence of McCl in the soil samples is not believed to be a concern.

Several volatile organic compounds were detected at concentrations exceeding C_{Leach} values. These were mainly from four GeoProbe® borings (GP-3, GP-5, GP-11, and GP-12), which are located immediately inside and outside of Buildings #4 and #6 in relative close proximity to one another.

TCE was detected in four soil samples from three GeoProbe® borings at concentrations exceeding the C_{Leach} value: in GP-3(7') inside the northwest corner of Building #6; and, in borings GP-11 (4' and 14') and GP-12 (14'), both on the exterior west side of Building #4.

Cis-DCE was detected in both soil samples collected from GP-11 at concentrations exceeding the C_{Leach} value.

Vinyl chloride was detected in two GeoProbe® borings [GP-3(7') and GP-5(11')] at concentrations slightly exceeding the C_{Leach} value. Those borings are located inside Buildings #4 and #6 near a former sump that has been filled with gravel and capped with concrete.

Napthalene was detected in GeoProbe® boring GP-7 above the C_{Leach}. However, napthalene was also detected in the method blank; and, therefore, may be a laboratory artifact .

Benzene was detected in GeoProbe® boring GP-12 slightly above the C_{Leach} value, but the concentration is only estimated due to high detection limits.

Total Petroleum Hydrocarbons

Various petroleum hydrocarbon constituents (including mineral spirits, and degraded forms of mineral spirits, motor oil and hydraulic fluid) were detected in the soil samples collected during installation of MW-1 and in nine of the 13 additional GeoProbe® borings installed during the second phase of the investigation; all are located in the vicinity of the southwest corner of the facility. The TPH concentration for each sample was compared to the STARC value provided in the CALM document for the ingestion/dermal contact/inhalation pathway for industrial settings (C_{IDI}; 1,000 ppm).

The soil sample collected from MW-1 and soil samples collected from five of the 13 additional GeoProbe® borings exceeded the C_{IDI} value. Mineral spirits were detected in the soil sample collected from MW-1 at a concentration of 3,830 ppm. A combination of mineral spirits and a degraded form of hydraulic fluid was detected in the soil samples collected from GP-7(4'), GP-8(6'), GP-10(4'), and GP-11(4'). Mineral spirits and a degraded form of motor oil were detected in GP-5(3'). It is important to note that the samples which exceeded the C_{IDI} value were always from the shallower depth of the two samples collected from each boring; and, the deeper samples at each location were well below the cleanup standard.

Mineral spirits and a degraded form of hydraulic fluid were also detected above the C_{IDI} value in one of the soil samples collected from one of the two probes installed outside of Building #7 (GP-14(4')). These petroleum constituents were not detected in the sample collected beneath this sample in the same boring or from an adjacent sampling location to the east (GP-15). Other petroleum constituents were detected in GP-15, but at minor concentrations.

Total RCRA Metals

Arsenic was detected in three soil samples slightly exceeding the CALM value of 14 mg/kg: MW-1(5') at 16.1 mg/kg, GP-3(7') at 19.7 mg/kg, and GP-6(14') at 14.9 mg/kg. Arsenic is commonly found in Missouri soils and its presence, while in excess of the C_{mi} value, is not believed to represent a significant concern.

Chromium and lead were detected in excess of CALM values in the soil sample collected from MW-1. The lead concentration was 1,690 mg/kg (vs. 660 mg/kg) and chromium was at 153 mg/kg (vs. 38 mg/kg).

4.2.2 Groundwater Samples

Groundwater samples collected during both phases of this subsurface investigation exhibited the following constituents above the laboratory reporting limits: 1,2-dichloroethane (1,2-DCA); 1,1-dichloroethene (1,1-DCE); TCE; cis-DCE; vinyl chloride; total xylenes; acetone; chloroform; benzene; carbon tetrachloride; isopropylbenzene; 1,2,4-trimethylbenzene; n-propylbenzene; 1,3,5-trimethylbenzene; sec-butylbenzene; MeCl; toluene; 1,1,2-trichloroethane; barium; chromium; mineral spirits and degraded forms of diesel fuel and hydraulic fluid.

The analytical results for the groundwater samples were compared to the Groundwater Target Concentrations (GTARC) published in the MDNR CALM document. Laboratory analytical reports and chain of custody forms are provided in Appendix B.

Volatile Organic Compounds

Volatile organic compounds (VOCs) were detected in groundwater samples collected from monitoring wells and temporary piezometers installed across the site.

VOC constituents which exceeded the respective CALM GTARC values were detected in monitoring well MW-1 and in all of the temporary piezometers installed at the southwest portion of the site; specifically, in the southwest corner (GP-9), inside Building #6 (GP-2 and GP-3), inside Building #4 (GP-6), and on the exterior west side of Building #4 (GP-11 and GP-12). The detected concentrations generally only slightly exceeded the GTARC values, with the exception of constituents detected in groundwater samples collected from GP-3, GP-11 and GP-12. Cis-DCE, TCE, vinyl chloride and benzene significantly exceeded the respective GTARC values at these locations.

TCE was detected in the groundwater samples obtained from monitoring wells MW-2 and MW-7 installed in the central portion of the site. Two additional wells were subsequently installed west of MW-2 in Parking Lots C and D during the second mobilization. MW-10 was installed outside the northwest corner of Building #13, and MW-11 was installed north of Building #10 (to the east of MW-10). TCE was detected in both wells at concentrations of 130 parts per billion (ppb) and 430 ppb, respectively. Since monitoring well MW-8, installed north of Parking Lot D, had no TCE, the impact observed appears to be associated with historical operations within Buildings #10 and/or #13. MW-9 was installed east of MW-7 (southeast of Building #13); but was dry and could not be sampled.

Total Petroleum Hydrocarbons

Various petroleum hydrocarbons (degraded forms of motor oil, mineral spirits and diesel oil) were detected in monitoring well MW-1 during the initial investigation at a total concentration which exceeded the CALM GTARC value for TPH. TPH was subsequently detected in excess of the GTARC value in four of the six temporary piezometers installed at the southwest portion of the site (GP-2, GP-10, GP-11 and GP-12). A sheen was observed in the sample and on the bailer while sampling GP-10, indicating the possible presence of free product.

Total RCRA Metals

No metals were detected in any of the groundwater samples at concentrations which exceeded the respective CALM GTARC values.

4.2.3 Wood Block Floor Samples

No PCBs were detected in any of the three samples of wood shavings which were collected from the wood floor in Building #13.

5.0 CONCLUSIONS AND RECOMMENDATIONS

Based on the subsurface investigation activities conducted by D&M in 1999/2000, ENVIRON presents the following general conclusions:

- Two water-bearing zones appear to be present at the site. The first groundwater bearing zone is encountered within discontinuous silt or gravelly clay seams that are present across a majority of the site. The second zone is encountered at the surface of bedrock, which was assumed to be at the depth of auger refusal. Rock coring was not performed to confirm the presence of bedrock. The latter provides little if any water; both appear to be perched zones.

- Based upon existing data, the subsurface appears to be complicated by the partial erosion of the yellowish brown shaley clay and the deposition of silty clay with the discontinuous silt and clayey gravel seams. Additional investigation would be necessary to fully characterize the subsurface at the site.

- The general groundwater flow direction across the site appears to be southeast. However, the wells and piezometers may not have achieved a static water level when measured in February 2000. Additional groundwater level measurements would need to be performed to define groundwater flow direction.

- PCBs were identified as a constituent of concern for the site in the Phase I Environmental Site Assessment, but only the wood block floor in Building 13 was analyzed for PCBs during the investigation.

- Monitoring wells and piezometers should be resampled and analyzed for VOCs, TPH and PCBs as appropriate to better define the specific impacts discussed below.

Southwest Portion of the Site

- Subsurface soil impact from VOCs is present in a localized area beneath the southern portion of Building #4, the northwest corner of Building #6 and the area immediately outside of these buildings to the west. This area appears to be impacted by vinyl chloride, TCE, and cis-DCE. Vinyl chloride and cis-DCE are degradation products of TCE.

- Subsurface soil impact from TPH is beneath the southern portion of Building #4 and outside of Building #6. Motor oil was detected in GP-5 beneath the Building #4 and mineral spirits and a degraded form of hydraulic fluid were detected in four geoprobe borings outside of Building #6 (GP-7, GP-8, GP-10, and GP-11).

- Subsurface soil impact from metals was detected in MW-1, GP-3 and GP-6.

- The upper perched water-bearing zone present in the southwest portion of the site is impacted with VOCs. VOC constituents which exceeded the respective CALM GTARC values were detected in monitoring well MW-1 and in all of the temporary piezometers installed in the southwest portion of the site.

- The upper perched water-bearing zone in the southwest portion of the site is also impacted with TPH. TPH were detected in monitoring well MW-1 at a total concentration which exceeded the CALM GTARC value. TPH were subsequently detected in four of the six temporary piezometers installed in the southwest portion of the site at concentrations which exceeded the CALM GTARC value (GP-2, GP-10, GP-11 and GP-12). The concentrations detected in GP-10 and GP-11 significantly exceeded the GTARC value.

Central Portion of the Site (Buildings 10 and 13)

- The groundwater contained within the discontinuous silt or gravelly clay seams near the buildings is impacted with VOC constituents. TCE was detected in the groundwater samples collected from monitoring wells MW-2 and MW-7. TCE was also detected in two wells that were installed west of MW-2 (MW-10 and MW-11). Other constituents in the impacted groundwater include degradation products of TCE.

Building #8 – Machining Area

- One monitoring well (MW-12) was installed to investigate the subsurface in the vicinity of Building #8. Soil samples collected from this boring did not indicate impact. Water was not encountered during installation of this well and a groundwater sample was not collected.

Building #7 – Hazardous Waste Storage Area

- Mineral spirits and a degraded form of hydraulic fluid were detected in excess of the CALM value in one of the soil samples collected from one of the two probes installed outside of Building #7 (GP-14(4')). These constituents were not detected in the soil sample collected beneath this sample in the same boring or from an adjacent sampling location to the east. Other petroleum hydrocarbon constituents were detected in the GeoProbe® boring completed immediately east of probe; however, they were detected at very minor concentrations.

Building #13 Wood Block Floor

- The wood chip samples from the floor of Building #13 did not exhibit any PCB impact.

TABLES

Table 1A
Water Level Record – Monitoring Wells
ENVIRON International Corporation Job No. 21-9588 A

Well No.	Ground Elevation (ft.) *	Top of Casing Elevation (ft.)*	Depth to Water from TOC (ft.) (11-30-99)	Water Elevation (ft)* (11-30-99)	Depth to Water from TOC (ft.) (2-11-00)	Water Elevation (ft)* (2-11-00)	Total Depth of Well (ft)**	Screened Interval (ft)**	Notes
MW-1	487.16	486.68	4.08	482.60	2.55	484.13	15	7-15	Purged well dry after removal of 4 gallons on 2-11-00.
MW-2	485.56	485.02	20.02	465.00	19.96	465.06	40	30-40	Purged 11 gallons on 2-11-00.
MW-3	486.37	485.86	11.98	473.88	11.96	473.90	30	20-30	Purged well dry after removal of 6 gallons on 2-11-00.
MW-4	476.65	476.59	20.10	456.49	5.97	470.62	22	12-22	Auger refusal at 445.65 (31 feet bgs). Boring partially backfilled for well construction. Well not purged due to poor recovery of water. No silt or gravelly clay seams were encountered in this boring.
MW-5	500.28	499.85	35.75	464.10	35.50	464.35	56.5	41.5-56.5	Auger refusal at 443.78. Purged well dry after removal of 6 gallons on 2-11-00.
MW-6	490.08	489.58	11.39	478.19	11.06	478.52	30	20-30	Purged 10 gallons on 2-11-00.
MW-7	484.97	484.69	17.05	467.64	16.90	467.79	33	23-33	Auger refusal at 451.97. Purged well dry after removal of 9 gallons on 2-11-00.
MW-8	488.83	488.62	NI	NI	15.73	472.89	35	25-35	Purged well dry after removal of 8 gallons on 2-11-00.
MW-9	482.88	482.57	NI	NI	DRY	DRY (<459.22)	23	13-23	Well is dry and has not been sampled. No silt or gravelly clay seams were encountered in this boring.
MW-10	485.24	484.90	NI	NI	19.86	465.04	33	23-33	Auger refusal at 452.24. Purged well dry after removal of 5 gallons on 2-11-00.
MW-11	485.89	485.60	NI	NI	20.17	465.43	36	26-36	Auger refusal at 449.89. Purged well dry after removal of 7 gallons on 2-11-00. No silt or gravelly clay seams were encountered in this boring.
MW-12	492.81	492.58	NI	NI	DRY	DRY (<451.31)	41.5	31.5-41.5	Auger refusal at 451.31. Well is dry and has not been sampled. No silt or gravelly clay seams were encountered in this boring.

Notes: * - Elevation based upon arbitrary 500' Datum selected at the site.
** - Feet below ground surface.
NI – Not installed at the respective date noted.

Table 1B
Water Level Record – Monitoring Wells
ENVIRON International Corporation Job No. 21-9588A

Well No.	Ground Elevation (ft.) *	Top of Casing Elevation (ft.)*	Depth to Water from TOC (ft.) (2-11-00)	Water Elevation (ft)* (2-11-00)	Total Depth of Well (ft)**	Screened Interval (ft)**	Notes
GP-2	489.31	489.10	7.87	481.23	20	10-20	Temporary well purged dry prior to sampling on 2-10-00.
GP-3	489.39	489.26	3.55	485.71	24	14-24	Temporary well purged dry prior to sampling on 2-10-00.
GP-6	490.10	489.97	9.81	480.16	24	14-24	Temporary well purged dry prior to sampling on 2-10-00.
GP-9	486.31	486.22	4.15	482.07	16	6-16	Temporary well purged dry prior to sampling on 2-10-00.
GP-10	487.80	487.71	2.80	484.91	16	6-16	Temporary well purged dry prior to sampling on 2-10-00. Screened within discontinuous gravelly clay seam.
GP-11	488.86	488.75	2.00	486.75	16	6-16	Temporary well purged dry prior to sampling on 2-10-00.
GP-12	489.88	489.80	1.24	488.56	16	6-16	Temporary well purged dry prior to sampling on 2-10-00.
GP-14	487.69	487.72	7.13	480.59	27	13-23	Temporary well purged dry prior to sampling on 2-10-00. Screened within discontinuous silt seam.

Notes: * - Elevation based upon arbitrary 500' Datum selected at the site.
** - Feet below ground surface.
NI – Not installed at the respective date noted.

TABLE 2
SOIL SAMPLING RESULTS
VOLATILE ORGANIC COMPOUNDS
ENVIRON Project No. 21-9588A

Parameter	MW-1(5')	MW-2(17')	MW-3(8')	MW-4(6')	MW-5(18')	MW-6(25')	STARC Scenario C[4]	STARC C_{LEACH}[5]
Xylene	5.9	ND	ND	ND	ND	ND	1510	55
Methylene Chloride	6.4B	0.006B	0.006B	0.007B	0.011B	0.009B	145	0.021
Ethylbenzene	1.9J	ND	ND	ND	ND	ND	1460	55
1,2,4-Trimethylbenzene	46	ND	ND	ND	ND	ND	NL	NL
Isopropylbenzene	3.7J	ND	ND	ND	ND	ND	NL	NL
n-Propylbenzene	9.6	ND	ND	ND	ND	ND	NL	NL
p-Isopropyltoluene	8.3	ND	ND	ND	ND	ND	NL	NL
n-Butylbenzene	9.3	ND	ND	ND	ND	ND	NL	NL
sec-Butylbenzene	7.6	ND	ND	ND	ND	ND	NL	NL
Acetone	ND	ND	ND	ND	ND	ND	8660	14
Vinyl Chloride	ND	ND	ND	ND	ND	ND	0.54	0.016
cis-1,2-Dichloroethene	ND	ND	ND	ND	ND	ND	910	0.51
Trichloroethene	ND	ND	ND	ND	ND	ND	81	0.091
1,3,5-Trimethylbenzene	ND	ND	ND	ND	ND	ND	NL	NL
Napthalene	ND	ND	ND	ND	ND	ND	3100	5.3
Benzene	ND	ND	ND	ND	ND	ND	16	0.057

Parameter	MW-7(5')	MW-12(10')	MW-12(27')	GP-1(7')	GP-1(10')	GP-2(10')	STARC Scenario C[4]	STARC C_{LEACH}[5]
Xylene	ND	ND	ND	ND	ND	ND	1510	55
Methylene Chloride	0.006B	0.012B	0.010B	0.014B	0.013B	0.013B	145	0.021
Ethylbenzene	ND	ND	ND	ND	ND	ND	1460	55
1,2,4-Trimethylbenzene	ND	ND	ND	ND	ND	ND	NL	NL
Isopropylbenzene	ND	ND	ND	ND	ND	ND	NL	NL
n-Propylbenzene	ND	ND	ND	ND	ND	ND	NL	NL
p-Isopropyltoluene	ND	ND	ND	ND	ND	ND	NL	NL
n-Butylbenzene	ND	ND	ND	ND	ND	ND	NL	NL
sec-Butylbenzene	ND	ND	ND	ND	ND	ND	NL	NL
Acetone	ND	ND	ND	0.0340	0.0470	0.0280	8660	14
Vinyl Chloride	ND	ND	ND	ND	ND	0.01	0.54	0.016
cis-1,2-Dichloroethene	ND	ND	ND	ND	ND	0.01	910	0.51
Trichloroethene	ND	ND	ND	ND	ND	ND	81	0.091
1,3,5-Trimethylbenzene	ND	ND	ND	ND	ND	ND	NL	NL
Napthalene	ND	ND	ND	ND	ND	ND	3100	5.3
Benzene	ND	ND	ND	ND	ND	ND	16	0.057

Parameter	GP-2(13')	GP-3(3')	GP-3(7')	GP-4(3')	GP-4(10')	GP-5(3')	STARC Scenario C[4]	STARC C_{LEACH}[5]
Xylene	ND	ND	ND	ND	ND	ND	1510	55
Methylene Chloride	0.011B	0.013B	0.011B	0.13B	0.011B	0.011B	145	0.021
Ethylbenzene	ND	ND	ND	ND	ND	ND	1460	55
1,2,4-Trimethylbenzene	ND	ND	ND	ND	ND	ND	NL	NL
Isopropylbenzene	ND	ND	ND	ND	ND	ND	NL	NL
n-Propylbenzene	ND	ND	ND	ND	ND	ND	NL	NL
p-Isopropyltoluene	ND	ND	ND	ND	ND	ND	NL	NL
n-Butylbenzene	ND	ND	ND	ND	ND	0.009	NL	NL
sec-Butylbenzene	ND	ND	ND	ND	ND	0.010	NL	NL
Acetone	0.0270	ND	ND	0.0640	ND	0.0270	8660	14
Vinyl Chloride	0.01	ND	0.0450	ND	ND	ND	0.54	0.016
cis-1,2-Dichloroethene	0.01	ND	0.1100	ND	ND	ND	910	0.51
Trichloroethene	ND	ND	0.1200	ND	ND	0.0170	81	0.091
1,3,5-Trimethylbenzene	ND	ND	ND	ND	ND	ND	NL	NL
Napthalene	ND	ND	ND	ND	ND	ND	3100	5.3
Benzene	ND	ND	ND	ND	ND	ND	16	0.057

TABLE 2
SOIL SAMPLING RESULTS
VOLATILE ORGANIC COMPOUNDS
ENVIRON Project No. 21-9588A

Parameter	GP-5(11')	GP-6(6')	GP-6(14')	GP-7(4')	GP-7(8')	GP-8(6')	STARC Scenario C[4]	STARC C_{LEACH}[5]
Xylene	ND	ND	ND	3.0	0.006	ND	1510	55
Methylene Chloride	0.012B	0.012B	0.012B	0.6B	0.014B	0.088B	145	0.021
Ethylbenzene	ND	ND	ND	1.4	ND	ND	1460	55
1,2,4-Trimethylbenzene	ND	ND	ND	22	0.024	ND	NL	NL
Isopropylbenzene	ND	ND	ND	1.6	0.006	0.086	NL	NL
n-Propylbenzene	ND	ND	ND	3.400	ND	0.240	NL	NL
p-Isopropyltoluene	ND	ND	ND	5.00	ND	ND	NL	NL
n-Butylbenzene	ND	ND	ND	4.30	0.012	0.390	NL	NL
sec-Butylbenzene	ND	ND	ND	3.40	0.022	0.290	NL	NL
Acetone	ND	ND	ND	ND	0.074	0.130	8660	14
Vinyl Chloride	0.0190	ND	ND	ND	ND	ND	0.54	0.016
cis-1,2-Dichloroethene	0.10	ND	ND	ND	ND	ND	910	0.51
Trichloroethene	0.037	0.017	ND	ND	ND	ND	81	0.091
1,3,5-Trimethylbenzene	ND	ND	ND	5.00	0.010	ND	NL	NL
Napthalene	ND	ND	ND	12.0B	ND	ND	3100	5.3
Benzene	ND	ND	ND	ND	ND	ND	16	0.057

Parameter	GP-8(10')	GP-9(4')	GP-9(7')	GP-10(4')	GP-10(10')	GP-11(4')	STARC Scenario C[4]	STARC C_{LEACH}[5]
Xylene	ND	ND	ND	ND	ND	ND	1510	55
Methylene Chloride	0.010B	0.010B	0.010B	1.40B	0.008B	2.80JB	145	0.021
Ethylbenzene	ND	ND	ND	ND	ND	ND	1460	55
1,2,4-Trimethylbenzene	ND	ND	ND	ND	ND	3.5	NL	NL
Isopropylbenzene	ND	ND	ND	ND	ND	1.8	NL	NL
n-Propylbenzene	ND	ND	ND	ND	ND	3.0	NL	NL
p-Isopropyltoluene	ND	ND	ND	ND	ND	ND	NL	NL
n-Butylbenzene	ND	ND	ND	0.25	ND	4.7	NL	NL
sec-Butylbenzene	ND	ND	ND	0.20	ND	3.6	NL	NL
Acetone	0.079	0.056	0.019	ND	0.027	ND	8660	14
Vinyl Chloride	ND	ND	ND	ND	ND	ND	0.54	0.016
cis-1,2-Dichloroethene	ND	ND	ND	ND	ND	30.00	910	0.51
Trichloroethene	ND	ND	ND	ND	ND	55.00	81	0.091
1,3,5-Trimethylbenzene	ND	ND	ND	ND	ND	3.8J	NL	NL
Napthalene	ND	ND	ND	ND	ND	ND	3100	5.3
Benzene	ND	ND	ND	ND	ND	ND	16	0.057

Parameter	GP-11(14')	GP-12(4')	GP-12(14')	GP-13(7')	GP-13(11')	GP-14(4')	STARC Scenario C[4]	STARC C_{LEACH}[5]
Xylene	ND	ND	ND	ND	ND	ND	1510	55
Methylene Chloride	0.700B	0.600B	0.530B	0.014B	0.016B	0.940B	145	0.021
Ethylbenzene	ND	ND	ND	ND	ND	ND	1460	55
1,2,4-Trimethylbenzene	0.90	ND	ND	ND	ND	ND	NL	NL
Isopropylbenzene	ND	0.210J	ND	ND	ND	0.200J	NL	NL
n-Propylbenzene	ND	ND	ND	ND	ND	0.450J	NL	NL
p-Isopropyltoluene	ND	ND	ND	ND	ND	ND	NL	NL
n-Butylbenzene	0.250J	0.460J	ND	ND	ND	1.20	NL	NL
sec-Butylbenzene	0.17J	0.450J	ND	ND	ND	0.810	NL	NL
Acetone	ND	ND	ND	0.036	0.047	ND	8660	14
Vinyl Chloride	ND	ND	ND	ND	ND	ND	0.54	0.016
cis-1,2-Dichloroethene	0.77	ND	0.280J	ND	ND	ND	910	0.51
Trichloroethene	19.00	ND	2.60	ND	ND	ND	81	0.091
1,3,5-Trimethylbenzene	0.33J	ND	ND	ND	ND	ND	NL	NL
Napthalene	ND	ND	0.83	ND	ND	0.740	3100	5.3
Benzene	ND	0.160J	ND	ND	ND	ND	16	0.057

TABLE 2
SOIL SAMPLING RESULTS
VOLATILE ORGANIC COMPOUNDS
ENVIRON Project No. 21-9588A

Parameter	GP-14(15')	GP-15(4')	GP-15(19')	STARC Scenario C[4]	STARC C_{LEACH}[5]
Xylene	ND	ND	ND	1510	55
Methylene Chloride	0.014B	0.009B	0.16B	145	0.021
Ethylbenzene	ND	ND	ND	1460	55
1,2,4-Trimethylbenzene	ND	ND	ND	NL	NL
Isopropylbenzene	ND	ND	ND	NL	NL
n-Propylbenzene	ND	ND	ND	NL	NL
p-Isopropyltoluene	ND	ND	ND	NL	NL
n-Butylbenzene	ND	ND	ND	NL	NL
sec-Butylbenzene	ND	ND	ND	NL	NL
Acetone	ND	ND	ND	8660	14
Vinyl Chloride	ND	ND	ND	0.54	0.016
cis-1,2-Dichloroethene	ND	ND	ND	910	0.51
Trichloroethene	ND	ND	ND	81	0.091
1,3,5-Trimethylbenzene	ND	ND	ND	NL	NL
Napthalene	ND	ND	ND	3100	5.3
Benzene	ND	ND	ND	16	0.057

Notes:
1. Analysis performed by ATAS using EPA SW-846 Method 8260
2. Units in mg/kg
3. Soil target concentrations (STARC) Missouri Department of Natural Resources Cleanup Levels for Missouri (CALM) September 1998
4. Ingestion/Dermal Contact/Inhalation Pathway for Scenario C (Industrial)
5. Leaching to Groundwater Pathway
6. NL – Cleanup objective no listed in CALM
7. ND – Not detected
8. J – Estimated value below the reporting limit
9. B – Detected in Method blank, possibly below the reporting limit
10. Only constituents detected are reported on the table
11. MW-1 through MW-7 were collected November, 1999 during the first mobilization. MW-12 through GP-15 were collected February, 2000 during the second mobilization

TABLE 3
SOIL SAMPLING RESULTS
TOTAL PETROLEUM HYDROCARBONS
ENVIRON Project No. 21-9588A

Parameter	MW-1(5')	MW-2(17')	MW-3(8')	MW-4(6')	MW-5(18')	MW-6(25')	STARC Scenario C[4]	STARC C_{LEACH}[5]
Gasoline	ND	ND	ND	ND	ND	ND	NL	NL
Mineral Spirits	3,830.0	ND	ND	ND	ND	ND	NL	NL
Kerosene	ND	ND	ND	ND	ND	ND	1460	55
Diesel	ND	ND	ND	ND	ND	ND	NL	NL
#6 Fuel Oil	ND	ND	ND	ND	ND	ND	NL	NL
Hydraulic Fluid	ND	ND	ND	ND	ND	ND	NL	NL
Motor Oil	ND	ND	ND	ND	ND	ND	NL	NL
Miscellaneous (1) motor oil	35,600	ND	ND	ND	ND	ND	NL	NL
Miscellaneous (2) mineral spirits	ND	ND	ND	ND	ND	ND	NL	NL
Miscellaneous (3) hydraulic fluid	ND	ND	ND	ND	ND	ND	NL	NL
Miscellaneous (4) diesel	ND	ND	ND	ND	ND	ND	NL	NL
TOTAL	**39,430**	**ND**	**ND**	**ND**	**ND**	**ND**	**1000**	**See Note 12**

Parameter	MW-7(5')	MW-12(10')	MW-12(27')	GP-1(7')	GP-1(10')	GP-2(10')	STARC Scenario C[4]	STARC C_{LEACH}[5]
Gasoline	ND	ND	ND	ND	ND	ND	NL	NL
Mineral Spirits	ND	ND	ND	ND	ND	ND	NL	NL
Kerosene	ND	ND	ND	ND	ND	ND	NL	NL
Diesel	ND	ND	ND	ND	ND	ND	NL	NL
#6 Fuel Oil	ND	ND	ND	ND	ND	ND	NL	NL
Hydraulic Fluid	ND	ND	ND	ND	ND	ND	NL	NL
Motor Oil	ND	ND	ND	ND	ND	ND	NL	NL
Miscellaneous (1) motor oil	ND	ND	ND	ND	ND	127.0	NL	NL
Miscellaneous (2) mineral spirits	ND	ND	ND	ND	ND	6.29	NL	NL
Miscellaneous (3) hydraulic fluid	ND	ND	ND	ND	ND	ND	NL	NL
Miscellaneous (4) diesel	ND	ND	ND	ND	ND	ND	NL	NL
TOTAL	**ND**	**ND**	**ND**	**ND**	**ND**	**133.29**	**1000**	**See Note 12**

Parameter	GP-2(13')	GP-3(3')	GP-3(7')	GP-4(3')	GP-4(10')	GP-5(3')	STARC Scenario C[4]	STARC C_{LEACH}[5]
Gasoline	ND	ND	ND	ND	ND	ND	NL	NL
Mineral Spirits	ND	ND	ND	ND	ND	88.6	NL	NL
Kerosene	ND	ND	ND	ND	ND	ND	NL	NL
Diesel	ND	ND	ND	ND	ND	ND	NL	NL
#6 Fuel Oil	ND	ND	ND	ND	ND	ND	NL	NL
Hydraulic Fluid	ND	ND	ND	ND	ND	ND	NL	NL
Motor Oil	ND	ND	ND	ND	ND	ND	NL	NL
Miscellaneous (1) motor oil	ND	26.0	ND	ND	ND	12,100.00	NL	NL
Miscellaneous (2) mineral spirits	ND	ND	ND	ND	ND	ND	NL	NL
Miscellaneous (3) hydraulic fluid	ND	ND	ND	ND	ND	ND	NL	NL
Miscellaneous (4) diesel	ND	ND	ND	ND	ND	ND	NL	NL
TOTAL	**ND**	**26.0**	**ND**	**ND**	**ND**	**12,188.60**	**1000**	**See Note 12**

TABLE 3
SOIL SAMPLING RESULTS
TOTAL PETROLEUM HYDROCARBONS
ENVIRON Project No. 21-9588A

Parameter	GP-5(11')	GP-6(6')	GP-6(14')	GP-7(4')	GP-7(8')	GP-8(6')	STARC Scenario C[4]	STARC C_{LEACH}[5]
Gasoline	ND	ND	ND	ND	ND	ND	NL	NL
Mineral Spirits	ND	ND	ND	2,060.0	15.4	143.0	NL	NL
Kerosene	ND	ND	ND	ND	ND	ND	NL	NL
Diesel	ND	ND	ND	ND	ND	ND	NL	NL
#6 Fuel Oil	ND	ND	ND	ND	ND	ND	NL	NL
Hydraulic Fluid	ND	ND	ND	ND	ND	ND	NL	NL
Motor Oil	ND	ND	ND	ND	ND	ND	NL	NL
Miscellaneous (1) motor oil	ND	ND	ND	ND	ND	ND	NL	NL
Miscellaneous (2) mineral spirits	ND	ND	ND	ND	ND	ND	NL	NL
Miscellaneous (3) hydraulic fluid	235.0	ND	ND	14,300.0	253.0	1,480.0	NL	NL
Miscellaneous (4) diesel	ND	ND	ND	ND	ND	ND	NL	NL
TOTAL	**235.00**	**ND**	**ND**	**16,360.0**	**268.4**	**1,623.0**	**1000**	**See Note 12**

Parameter	GP-8(10')	GP-9(4')	GP-9(7')	GP-10(4')	GP-10(10')	GP-11(4')	STARC Scenario C[4]	STARC C_{LEACH}[5]
Gasoline	ND	ND	ND	ND	ND	ND	NL	NL
Mineral Spirits	ND	ND	ND	113.0	ND	640.0	NL	NL
Kerosene	ND	ND	ND	ND	ND	ND	NL	NL
Diesel	ND	ND	ND	ND	ND	ND	NL	NL
#6 Fuel Oil	ND	ND	ND	ND	ND	ND	NL	NL
Hydraulic Fluid	ND	ND	ND	ND	ND	ND	NL	NL
Motor Oil	ND	ND	ND	ND	ND	ND	NL	NL
Miscellaneous (1) motor oil	ND	ND	ND	ND	ND	ND	NL	NL
Miscellaneous (2) mineral spirits	ND	ND	ND	ND	ND	ND	NL	NL
Miscellaneous (3) hydraulic fluid	95.7	ND	ND	887.0	ND	1,960.0	NL	NL
Miscellaneous (4) diesel	ND	ND	ND	ND	ND	ND	NL	NL
TOTAL	**95.7**	**ND**	**ND**	**1,000.0**	**ND**	**2,600.0**	**1000**	**See Note 12**

Parameter	GP-11(14')	GP-12(4')	GP-12(14')	GP-13(7')	GP-13(11')	GP-14(4')	STARC Scenario C[4]	STARC C_{LEACH}[5]
Gasoline	ND	ND	ND	ND	ND	ND	NL	NL
Mineral Spirits	58.5	65.0	ND	ND	ND	1,200.0	NL	NL
Kerosene	ND	ND	ND	ND	ND	ND	NL	NL
Diesel	ND	ND	ND	ND	ND	ND	NL	NL
#6 Fuel Oil	ND	ND	ND	ND	ND	ND	NL	NL
Hydraulic Fluid	ND	ND	ND	ND	ND	ND	NL	NL
Motor Oil	ND	ND	ND	ND	ND	ND	NL	NL
Miscellaneous (1) motor oil	ND	ND	ND	67.6	ND	ND	NL	NL
Miscellaneous (2) mineral spirits	ND	ND	ND	ND	ND	ND	NL	NL
Miscellaneous (3) hydraulic fluid	340.0	767.0	191.0	0.036	ND	515.0	NL	NL
Miscellaneous (4) diesel	ND	ND	ND	ND	ND	ND	NL	NL
TOTAL	**398.50**	**832.0**	**191.0**	**67.6**	**ND**	**1,715.0**	**1000**	**See Note 12**

TABLE 3
SOIL SAMPLING RESULTS
TOTAL PETROLEUM HYDROCARBONS
ENVIRON Project No. 21-9588A

Parameter	GP-14(15')	GP-15(4')	GP-15(19')	STARC Scenario C[4]	STARC C_{LEACH}[5]
Gasoline	ND	ND	ND	NL	NL
Mineral Spirits	ND	ND	ND	NL	NL
Kerosene	ND	ND	ND	NL	NL
Diesel	ND	ND	ND	NL	NL
#6 Fuel Oil	ND	ND	ND	NL	NL
Hydraulic Fluid	ND	ND	ND	NL	NL
Motor Oil	ND	ND	ND	NL	NL
Miscellaneous (1) motor oil	ND	ND	18.60	NL	NL
Miscellaneous (2) mineral spirits	ND	ND	ND	NL	NL
Miscellaneous (3) hydraulic fluid	ND	ND	ND	NL	NL
Miscellaneous (4) diesel	ND	ND	14.10	NL	NL
TOTAL	**0.00**	**0.00**	**32.70**	**1000**	**See Note 12**

Notes:

1. Analysis performed by ATAS using EPA SW-846 Method 8260
2. Units in mg/kg
3. Soil target concentrations (STARC) Missouri Department of Natural Resources Cleanup Levels for Missouri (CALM) September 1998
4. Ingestion/Dermal Contact/Inhalation Pathway for Scenario C
5. Leaching to Groundwater Pathway
6. NL – Cleanup objective no listed in CALM
7. ND – Not detected
8. J – Estimated value below the reporting limits
9. B – Detected in Method blank, possibly below the reporting limit
10. Only constituents detected are reported on the table
11. MW-1 through MW-7 were collected November, 1999 during the first mobilization. MW-12 through GP-15 were collected February, 2000 during the second mobilization
12. No C_{LEACH} value is calculated for this parameter. The C_{IDI} values are also protective of the leaching to groundwater pathway.
13. Miscellaneous (1) Analysis show peaks which cannot be matched to any hydrocarbon standard listed above. The pattern was most similar to motor oil and was quantified from that standard.
14. Miscellaneous (2) Analysis show peaks which cannot be matched to any hydrocarbon standard listed above. The pattern was most similar to mineral spirits and was quantified for that standard.
15. Miscellaneous (3) Analysis show peaks which cannot be matched to any hydrocarbon standard listed above. The pattern was most similar to hydraulic fluid and was quantified for that standard.
16. Miscellaneous (4) Analysis show peaks which cannot be matched to any hydrocarbon standard listed above. The pattern was most similar to diesel and was quantified for that standard.

TABLE 4
SOIL SAMPLING RESULTS
TOTAL RCRA METALS AND PCBS
ENVIRON Project No. 21-9588A

Parameter	MW-1(5')	MW-2(17')	MW-3(8')	MW-4(6')	MW-5(18')	MW-6(25')	STARC Scenario C[4]	STARC C_{LEACH}[5]
Arsenic	**16.1**	3.86	5.26	2.15	3.75	3.54	14	NL
Barium	249	517	117	83.4	62.5	27.5	9,040	1,650
Cadmium	ND	ND	ND	ND	ND	ND	300	11
Chromium	**153**	15.0	12.1	15.5	15.9	11.9	2,700	38
Lead	**1690**	7.89	17.6	3.92	7.39	6.41	660	See Note 9
Silver	ND	ND	ND	ND	ND	ND	1,160	255
Selenium	ND	ND	ND	ND	ND	ND	970	4.37
Mercury	0.486	ND	ND	ND	ND	ND	250	3.23
PCBs	ND	NA	NA	NA	NA	NA	2.5	See Note 10

Parameter	MW-7(5')	MW-12(10')	MW-12(27')	GP-1(7')	GP-1(10')	GP-2(10')	STARC Scenario C[4]	STARC C_{LEACH}[5]
Arsenic	4.56	3.8	2.6	11.8	5.7	5.7	14	NL
Barium	100	88.7	55.8	184	126	117	9,040	1,650
Cadmium	ND	0.22	ND	ND	ND	ND	300	11
Chromium	14.5	18.8	20.3	12.9	13.6	18.4	2,700	38
Lead	6.59	9.9	ND	16.9	9.8	12.3	660	See Note 9
Silver	ND	ND	ND	ND	ND	ND	1,160	255
Selenium	ND	ND	ND	ND	ND	ND	970	4.37
Mercury	ND	ND	ND	ND	ND	ND	250	3.23
PCBs	NA	NA	NA	NA	NA	NA	2.5	See Note 10

Parameter	GP-2(13')	GP-3(3')	GP-3(7')	GP-4(3')	GP-4(10')	GP-5(3')	STARC Scenario C[4]	STARC C_{LEACH}[5]
Arsenic	2.5	3.7	**19.7**	3.0	6.0	7.8	14	NL
Barium	74.0	29.6	111	102	129	171	9,040	1,650
Cadmium	ND	7.4	ND	ND	ND	ND	300	11
Chromium	19.8	8.6	12.9	6.3	18.5	17.9	2,700	38
Lead	7.5	12.2	10.8	21.8	8.1	7.8	660	See Note 9
Silver	ND	ND	ND	ND	ND	ND	1,160	255
Selenium	ND	ND	ND	ND	ND	ND	970	4.37
Mercury	ND	ND	ND	ND	ND	ND	250	3.23
PCBs	NA	NA	NA	NA	NA	NA	2.5	See Note 10

Parameter	GP-5(11')	GP-6(6')	GP-6(14')	GP-7(4')	GP-7(8')	GP-8(6')	STARC Scenario C[4]	STARC C_{LEACH}[5]
Arsenic	2.1	6.7	**14.9**	4.0	3.6	9.2	14	NL
Barium	67.5	85.6	172	174.0	72.6	105.0	9,040	1,650
Cadmium	ND	ND	ND	0.33	ND	ND	300	11
Chromium	16.1	13.2	22.0	12.9	16.1	13.9	2,700	38
Lead	6.3	11.5	13.1	304.0	16.1	10.4	660	See Note 9
Silver	ND	ND	ND	ND	ND	ND	1,160	255
Selenium	ND	ND	ND	ND	ND	ND	970	4.37
Mercury	ND	ND	ND	0.39	ND	ND	250	3.23
PCBs	NA	NA	NA	NA	NA	NA	2.5	See Note 10

TABLE 4
SOIL SAMPLING RESULTS
TOTAL RCRA METALS AND PCBS
ENVIRON Project No. 21-9588A

Parameter	GP-8(10')	GP-9(4')	GP-9(7')	GP-10(4')	GP-10(10')	GP-11(4')	STARC Scenario C[4]	STARC C_{LEACH}[5]
Arsenic	6.1	5.6	2.3	6.6	2.9	4.3	14	NL
Barium	127.0	122.0	87.1	107.0	76.1	168.0	9,040	1,650
Cadmium	ND	ND	ND	0.22	ND	ND	300	11
Chromium	20.1	13.3	16.2	15.0	14.8	11.1	2,700	38
Lead	18.8	12.3	6.8	39.4	10.1	7.6	660	See Note 9
Silver	ND	ND	ND	ND	ND	ND	1,160	255
Selenium	ND	ND	ND	ND	ND	ND	970	4.37
Mercury	ND	ND	ND	ND	ND	ND	250	3.23
PCBs	NA	NA	NA	NA	NA	NA	2.5	See Note 10

Parameter	GP-11(14')	GP-12(4')	GP-12(14')	GP-13(7')	GP-13(11')	GP-14(4')	STARC Scenario C[4]	STARC C_{LEACH}[5]
Arsenic	3.7	4.5	3.4	5.9	2.3	3.1	14	NL
Barium	77.0	128.0	74.6	83.9	126.0	110	9,040	1,650
Cadmium	0.27	ND	ND	0.53	ND	ND	300	11
Chromium	11.0	14.3	16.1	8.4	16.4	16.8	2,700	38
Lead	8.6	7.6	7.5	388.0	5.5	7.3	660	See Note 9
Silver	ND	ND	ND	ND	ND	ND	1,160	255
Selenium	ND	ND	ND	ND	ND	ND	970	4.37
Mercury	ND	ND	ND	ND	ND	ND	250	3.23
PCBs	NA	NA	NA	NA	NA	NA	2.5	See Note 10

.rameter	GP-14(15')	GP-15(4')	GP-15(19')	STARC Scenario C[4]	STARC C_{LEACH}[5]
Arsenic	5.8	8.23	5.5	14	NL
Barium	94.0	140	86.9	9,040	1,650
Cadmium	ND	ND	ND	300	11
Chromium	14.80	15.3	16.3	27,00	38
Lead	8.5	11.2	6.8	660	See Note 9
Silver	ND	ND	ND	1,160	255
Selenium	ND	ND	ND	970	4.37
Mercury	ND	ND	ND	250	3.23
PCBs	NA	NA	NA	2.5	See Note 10

Notes:

1. Analysis performed by ATAS; RCRA Metals excluding Mercury conducted according to EPA SW-846 Method 6010; Mercury analysis conducted according to EPA SW-846 Method 7471
2. Units in mg/kg
3. Soil target concentrations (STARC) Missouri Department of Natural Resources Cleanup Levels for Missouri (CALM) September 1998
4. Ingestion/Dermal Contact/Inhalation Pathway for Scenario C
5. Leaching to Groundwater Pathway
6. NL – Cleanup objective no listed in CALM
7. ND – Not detected
8. NA – Not analyzed
9. According to CALM, lead exists in the environment at several different valence states each with very different leaching properties. The potential threat to groundwater posed by lead impact in soil is evaluated by MDNR on a case-by-case basis.
10. No C_{LEACH} value is calculated. The C_{IDI} value is also protective of leaching to groundwater pathway
11. MW-1 through MW-7 were collected November, 1999 during the first mobilization. MW-12 through GP-15 were collected February, 2000 during the second mobilization

TABLE 5
GROUNDWATER SAMPLING RESULTS
VOLATILE ORGANIC COMPOUNDS
ENVIRON Project No. 21-9588A

Parameter	MW-1	MW-2	MW-3	MW-4	MW-5	GTARC
Xylene	0.008	ND	ND	ND	ND	0.32
Acetone	0.028	ND	ND	ND	ND	4
cis-1,2-Dichloroethene	0.04	0.008	ND	ND	ND	0.07
Chloroform	ND	ND	ND	0.005	ND	0.1
Benzene	**0.022**	ND	ND	ND	ND	0.005
Carbon Tetrachloride	ND	ND	ND	ND	ND	0.005
Trichlorethene	**0.008**	**0.19**	ND	ND	ND	0.005
Isopropylbenzene	0.008	ND	ND	ND	ND	NL
1,2,4-Trimethylbenzene	0.038	ND	ND	ND	ND	NL
n-Propylbenzene	0.014	ND	ND	ND	ND	NL
1,3,5-Trimethylbenzene	0.02	ND	ND	ND	ND	NL
sec-Butylbenzene	0.006	ND	ND	ND	ND	NL
n-Butylbenzene	0.006	ND	ND	ND	ND	NL
Vinyl Chloride	ND	ND	ND	ND	ND	0.002
Methylene Chloride	ND	ND	ND	ND	ND	0.005
1,1-Dichloroethene	ND	ND	ND	ND	ND	0.007
1,2-Dichloroethane	ND	ND	ND	ND	ND	0.005
Toluene	ND	ND	ND	ND	ND	0.150
1,1,2-Trichloroethane	ND	ND	ND	ND	ND	0.005

Parameter	MW-6	MW-7	MW-8	MW-10	MW-11	GTARC
Xylene	ND	ND	ND	ND	ND	0.32
Acetone	ND	ND	ND	ND	ND	4
cis-1,2-Dichloroethene	ND	ND	ND	ND	ND	0.07
Chloroform	ND	**0.11**	ND	ND	ND	0.1
Benzene	ND	ND	ND	ND	ND	0.005
Carbon Tetrachloride	ND	**0.046**	ND	ND	ND	0.005
Trichlorethene	ND	**0.007**	ND	**0.130**	**0.430**	0.005
Isopropylbenzene	ND	ND	ND	ND	ND	NL
1,2,4-Trimethylbenzene	ND	ND	ND	ND	ND	NL
n-Propylbenzene	ND	ND	ND	ND	ND	NL
1,3,5-Trimethylbenzene	ND	ND	ND	ND	ND	NL
sec-Butylbenzene	ND	ND	ND	ND	ND	NL
n-Butylbenzene	ND	ND	ND	ND	ND	NL
Vinyl Chloride	ND	ND	ND	ND	ND	0.002
Methylene Chloride	ND	ND	**0.008B**	**0.009B**	**0.008B**	0.005
1,1-Dichloroethene	ND	ND	ND	ND	ND	0.007
1,2-Dichloroethane	ND	ND	ND	ND	ND	0.005
Toluene	ND	ND	ND	ND	ND	0.150
1,1,2-Trichloroethane	ND	ND	ND	ND	ND	0.005

TABLE 5
GROUNDWATER SAMPLING RESULTS
VOLATILE ORGANIC COMPOUNDS
ENVIRON Project No. 21-9588A

Parameter	GP-2	GP-3	GP-6	GP-9	GP-10	GTARC
Xylene	ND	ND	ND	ND	ND	0.32
Acetone	ND	ND	ND	ND	ND	4
cis-1,2-Dichloroethene	0.062	**0.410**	ND	**0.091**	ND	0.07
Chloroform	ND	ND	ND	ND	ND	0.1
Benzene	**0.010**	ND	ND	ND	**0.048J**	0.005
Carbon Tetrachloride	ND	ND	ND	ND	ND	0.005
Trichlorethene	ND	**0.580**	**0.006**	**0.005**	ND	0.005
Isopropylbenzene	ND	ND	ND	ND	ND	NL
1,2,4-Trimethylbenzene	ND	ND	ND	ND	ND	NL
n-Propylbenzene	ND	ND	ND	ND	0.038J	NL
1,3,5-Trimethylbenzene	ND	ND	ND	ND	ND	NL
sec-Butylbenzene	ND	ND	ND	ND	0.059J	NL
n-Butylbenzene	ND	ND	ND	ND	0.061J	NL
Vinyl Chloride	**0.038**	**0.120**	ND	**0.120**	ND	0.002
Methylene Chloride	**0.009B**	**0.006**	ND	ND	**0.084JB**	0.005
1,1-Dichloroethene	ND	ND	ND	ND	ND	0.007
1,2-Dichloroethane	ND	ND	ND	ND	ND	0.005
Toluene	ND	ND	ND	ND	ND	0.150
1,1,2-Trichloroethane	ND	ND	ND	ND	ND	0.005

Parameter	GP-11	GP-12	GP-14	GTARC
Xylene	0.190J	0.012	ND	0.32
Acetone	ND	0.019	ND	4
cis-1,2-Dichloroethene	**34.0**	**3.7**	0.005	0.07
Chloroform	ND	ND	ND	0.1
Benzene	**0.540**	**0.260J**	ND	0.005
Carbon Tetrachloride	ND	ND	ND	0.005
Trichlorethene	**22.0**	**6.0**	**0.005**	0.005
Isopropylbenzene	ND	0.006	ND	NL
1,2,4-Trimethylbenzene	ND	0.043	ND	NL
n-Propylbenzene	ND	0.006	0.005	NL
1,3,5-Trimethylbenzene	ND	0.013	ND	NL
sec-Butylbenzene	ND	0.005	ND	NL
n-Butylbenzene	ND	ND	ND	NL
Vinyl Chloride	**2.20**	**0.940**	ND	0.002
Methylene Chloride	**0.230JB**	ND	ND	0.005
1,1-Dichloroethene	0.70	**0.020**	ND	0.007
1,2-Dichloroethane	ND	**0.013**	ND	0.005
Toluene	ND	0.007	ND	0.150
1,1,2-Trichloroethane	ND	**0.011**	ND	0.005

Notes:

1. Analysis performed by ATAS; RCRA Metals excluding Mercury conducted according to EPA SW-846 Method 6010; Mercury analysis conducted according to EPA SW-846 Method 7471
2. Units in mg/kg
3. Groundwater target concentrations (GTARC) Missouri Department of Natural Resources Cleanup Levels for Missouri (CALM)
   ND – Not detected
5. Only constituents detected are listed on the table
6. MW-1 through MW-7 were collected November, 1999 during the first mobilization. MW-12 through GP-15 were collected February, 2000 during the second mobilization

TABLE 6
GROUNDWATER SAMPLING RESULTS
TOTAL PETROLEUM HYDROCARBONS (OA2)
ENVIRON Project No. 21-9588A

Parameter	MW-1	MW-2	MW-3	MW-4	MW-5	MW-6	MW-7	GTARC
Gasoline	ND	ND	ND	ND	ND	ND	ND	NL
Mineral Spirits	ND	ND	ND	ND	ND	ND	ND	NL
Kerosene	ND	ND	ND	ND	ND	ND	ND	NL
Diesel	ND	ND	ND	ND	ND	ND	ND	NL
#6 Fuel Oil	ND	ND	ND	ND	ND	ND	ND	NL
Hydraulic Fluid	ND	ND	ND	ND	ND	ND	ND	NL
Motor Oil	ND	ND	ND	ND	ND	ND	ND	NL
Miscellaneous (1)	1.30	NR	NR	0.168	NR	NR	NR	NL
Miscellaneous (2)	4.47	NR	NR	NR	NR	NR	NR	NL
Miscellaneous (3)	15.5	NR	NR	NR	NR	NR	NR	NL
Miscellaneous (4)	NR	NR	NR	NR	NR	NR	NR	NL
TOTAL	21.27	ND	ND	0.168	ND	ND	ND	10

Parameter	MW-8	MW-10	MW-11	GP-2	GP-3	GP-6	GTARC
Gasoline	ND	ND	ND	ND	ND	ND	NL
Mineral Spirits	ND	ND	ND	1.68	ND	ND	NL
Kerosene	ND	ND	ND	ND	ND	ND	NL
Diesel	ND	ND	ND	ND	ND	ND	NL
#6 Fuel Oil	ND	ND	ND	ND	ND	ND	NL
Hydraulic Fluid	ND	ND	ND	ND	ND	ND	NL
Motor Oil	ND	ND	ND	ND	ND	ND	NL
Miscellaneous (1)	ND	ND	ND	ND	ND	ND	NL
Miscellaneous (2)	ND	ND	ND	ND	0.681	ND	NL
Miscellaneous (3)	ND	ND	ND	ND	ND	ND	NL
Miscellaneous (4)	ND	ND	ND	8.65	1.3	0.836	NL
TOTAL	ND	ND	ND	10.3	1.918	0.836	10

Parameter	GP-9	GP-10	GP-11	GP-12	GP-14	GTARC
Gasoline	ND	ND	ND	ND	ND	NL
Mineral Spirits	ND	201.0	801.0	1.210	ND	NL
Kerosene	ND	ND	ND	ND	ND	NL
Diesel	ND	ND	ND	ND	ND	NL
#6 Fuel Oil	ND	ND	ND	ND	ND	NL
Hydraulic Fluid	ND	ND	ND	ND	ND	NL
Motor Oil	ND	ND	ND	ND	ND	NL
Miscellaneous (1)	ND	ND	ND	ND	ND	NL
Miscellaneous (2)	ND	ND	ND	3.67	2.34	NL
Miscellaneous (3)	ND	ND	ND	ND	ND	NL
Miscellaneous (4)	1.29	641.0	901.0	8.22	4.75	NL
TOTAL	1.29	842.0	1702.0	13.1	7.1	10

Notes:

1. Analysis performed by ATAS using EPA SW-846 Method 8015
2. Units in mg/kg
3. Groundwater target concentrations (GTARC) Missouri Department of Natural Resources Cleanup Levels for Missouri (CALM) September 1998
4. NL – Cleanup objective not listed in CALM
5. ND – Not detected
6. NR – Not reported on Laboratory Data Sheets
7. Miscellaneous (1) Analysis shows peaks which cannot be matched to any hydrocarbon standard listed above. The pattern is most similar to mineral spirits and was quantified from that standard.
8. Miscellaneous (2) Analysis shows peaks which cannot be matched to any hydrocarbon standard listed above. The pattern is most similar to diesel fuel and was quantified from that standard.
9. Miscellaneous (3) Analysis shows peaks which cannot be matched to any hydrocarbon standard listed above. The pattern is most similar to motor oil and was quantified from that standard.
10. Miscellaneous (4) Analysis shows peaks which cannot be matched to any hydrocarbon standard listed above. The pattern is most similar to hydraulic fluid and was quantified from that standard.
11. MW-1 through MW-7 were collected November, 1999 during the first mobilization. MW-8 through GP-14 were collected February, 2000 during the second mobilization.

TABLE 7
GROUNDWATER SAMPLING RESULTS
TOTAL RCRA METALS
ENVIRON Project No. 21-9588A

Parameter	MW-1	MW-2	MW-3	MW-4	MW-5	MW-6	MW-7	GTARC
Arsenic	ND	ND	ND	ND	ND	ND	ND	0.05
Barium	0.223	0.214	0.064	0.047	0.064	0.049	0.162	2.0
Cadmium	ND	ND	ND	ND	ND	ND	ND	0.005
Chromium	ND	ND	ND	ND	ND	ND	ND	0.1
Lead	ND	ND	ND	ND	ND	ND	ND	0.015
Silver	ND	ND	ND	ND	ND	ND	ND	0.1
Selenium	ND	ND	ND	ND	ND	ND	ND	0.05
Mercury	ND	ND	ND	ND	ND	ND	ND	

Parameter	MW-8	MW-10	MW-11	GP-2	GP-3	GP-6	GP-9	GTARC
Arsenic	ND	ND	ND	ND	ND	ND	ND	0.05
Barium	0.087	0.13	0.22	0.48	0.22	0.24	0.10	2.0
Cadmium	ND	ND	ND	ND	ND	ND	ND	0.005
Chromium	ND	0.005	ND	ND	ND	0.012	ND	0.1
Lead	ND	ND	ND	ND	ND	ND	ND	0.015
Silver	ND	ND	ND	ND	ND	ND	ND	0.1
Selenium	ND	ND	ND	ND	ND	ND	ND	0.05
Mercury	ND	ND	ND	ND	ND	ND	ND	

Parameter	GP-10	GP-11	GP-12	GP-14	GTARC
Arsenic	ND	ND	ND	ND	0.05
Barium	0.37	0.24	0.90	0.18	2.0
Cadmium	ND	ND	ND	ND	0.005
Chromium	ND	ND	ND	ND	0.1
Lead	ND	ND	ND	ND	0.015
Silver	ND	ND	ND	ND	0.1
Selenium	ND	ND	ND	ND	0.05
Mercury	ND	ND	ND	ND	

Notes:
1. Analysis performed by ATAS using EPA SW-846 Method 8260
2. Units in mg/kg
3. Groundwater target concentrations (GTARC) Missouri Department of Natural Resources Cleanup Levels for Missouri (CALM) September 1998
4. ND – Not detected
5. MW-1 through MW-7 were collected November, 1999 during the first mobilization. MW-8 through GP-14 were collected February, 2000 during the second mobilization.

FIGURES

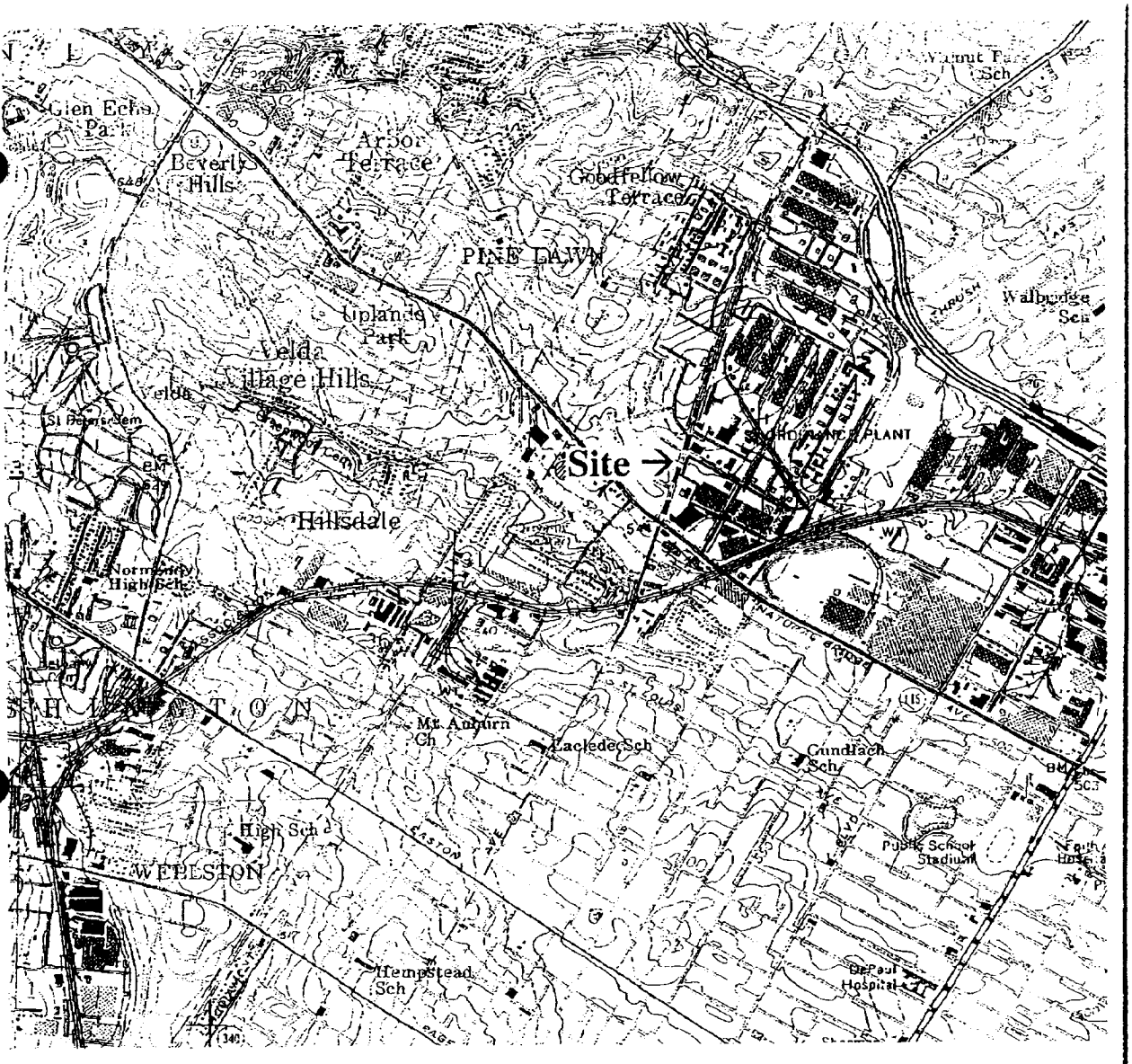

SCALE 1: 24000

1 1/2 0 1 MILE

2000 0 2000 4000 6000 FEET

1 .5 0 1 KILOMETER

CONTOUR INTERVAL 40 FEET
DOTTED LINES REPRESENT 10-FOOT CONTOURS
NATIONAL GEODETIC VERTICAL DATUM OF 1929

SOURCE: U.S.G.S. 7.5 minute series (topographic)
Clayton, Missouri (1979)

ENVIRON 150 St. Peters Center Blvd., Suite B, St. Peters, MO 63376	Site Location Map Lincoln Industrial - Pentair, Inc. St. Louis, Missouri	Figure 1

Drafter: APR Date: 05/10/01 Contract Number: 02-9453 A Approved: Revised:

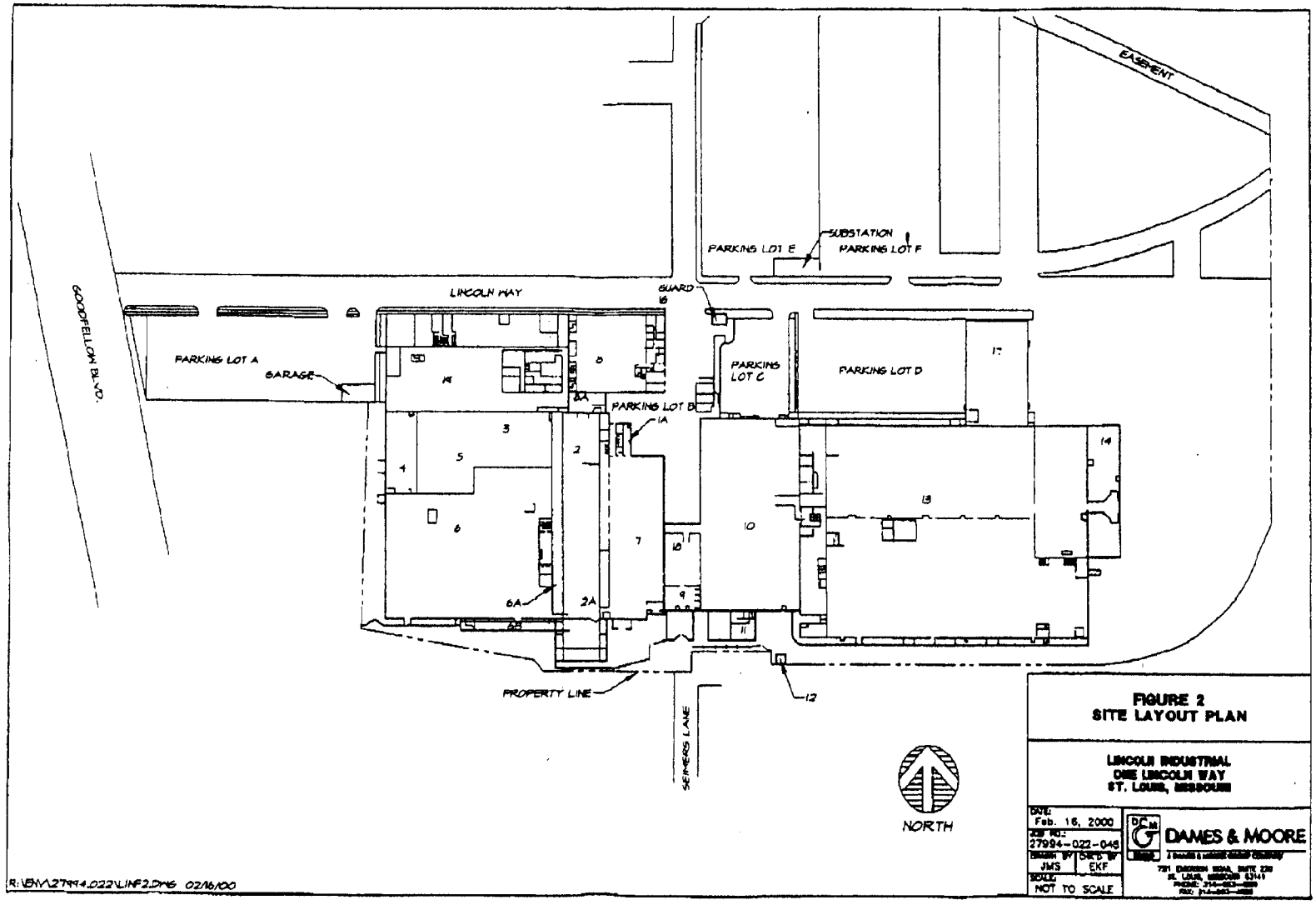

FIGURE 2
SITE LAYOUT PLAN

LINCOLN INDUSTRIAL
ONE LINCOLN WAY
ST. LOUIS, MISSOURI

DATE: Feb. 16, 2000	DAMES & MOORE
JOB NO.: 27994-022-048	
DRAWN BY: JMS / CHK'D BY: EKF	
SCALE: NOT TO SCALE	

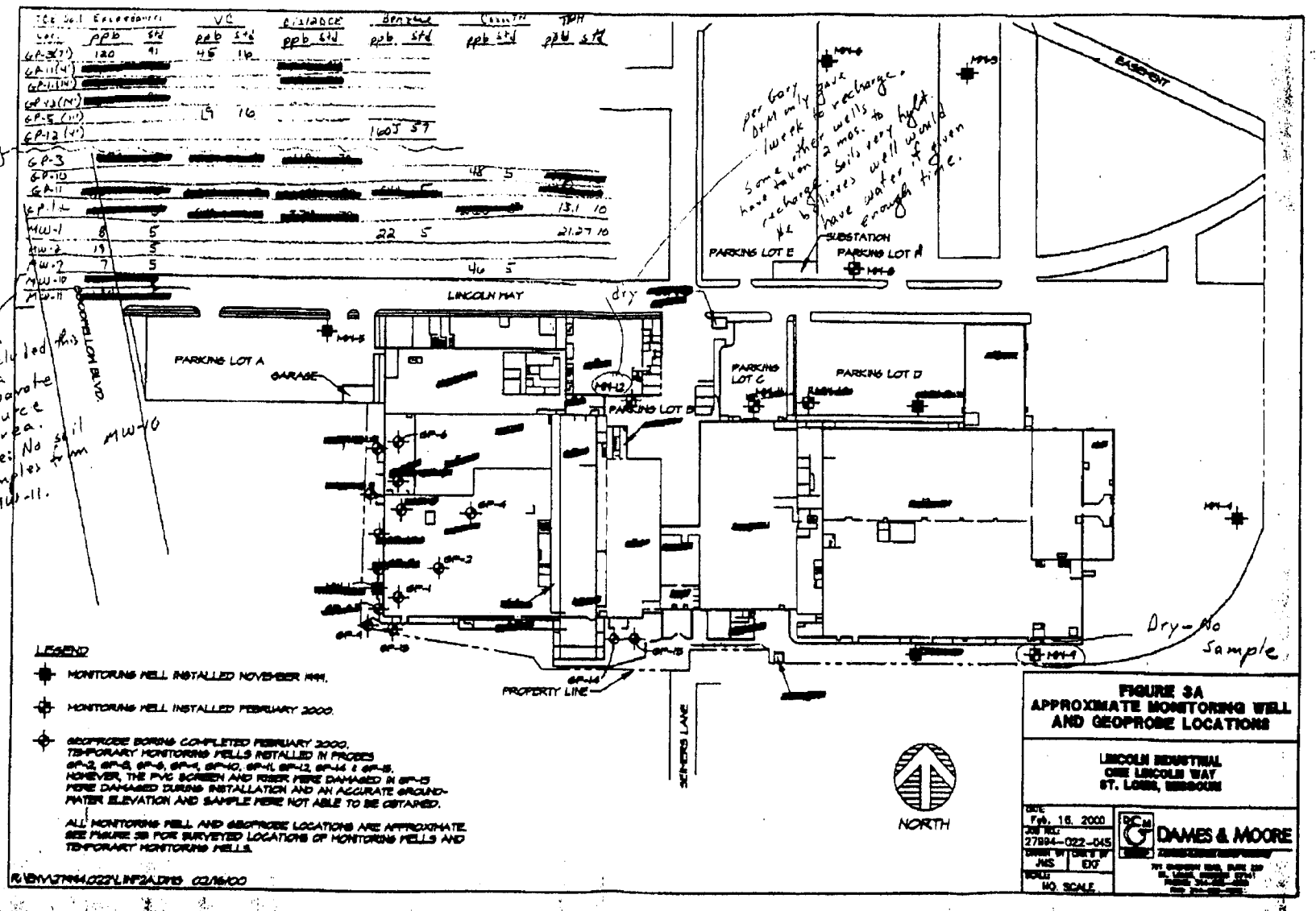

TCE Soil Exceedances
VC
Distance
Benzene
Cosmetic
TPH
ppb std
GP-3(7') 120 41 45 16
GP-11(4')
GP-11(14')
GP-12(14')
GP-5(11') 19 16
GP-12(4') 160J 57
GP-3
GP-10 48 5
GP-11
GP-12 13.1 10
MW-1 8 5 22 5 21.27 10
MW-2 19 5
MW-7 7 5 46 5
MW-10
MW-11
GW
Environ Concluded this is a separate source area. Note: No soil samples from MW-10 + MW-11.
per Gary D+M only gave 1 week to recharge. Some other wells have taken 2 mos. to recharge. Soils very hyl. He believes well would have water if given enough time.
dry
LINCOLN WAY
GOODFELLOW BLVD.
PARKING LOT A
GARAGE
PARKING LOT B
PARKING LOT C
PARKING LOT D
PARKING LOT E
SUBSTATION
PARKING LOT F
BASEMENT
PROPERTY LINE
SEIMERS LANE
Dry - No Sample
NORTH
LEGEND
MONITORING WELL INSTALLED NOVEMBER 1994.
MONITORING WELL INSTALLED FEBRUARY 2000.
GEOPROBE BORING COMPLETED FEBRUARY 2000. TEMPORARY MONITORING WELLS INSTALLED IN PROBES GP-2, GP-8, GP-6, GP-4, GP-10, GP-11, GP-12, GP-14 & GP-15. HOWEVER, THE PVC SCREEN AND RISER WERE DAMAGED IN GP-15 WERE DAMAGED DURING INSTALLATION AND AN ACCURATE GROUND-WATER ELEVATION AND SAMPLE WERE NOT ABLE TO BE OBTAINED.
ALL MONITORING WELL AND GEOPROBE LOCATIONS ARE APPROXIMATE. SEE FIGURE 3B FOR SURVEYED LOCATIONS OF MONITORING WELLS AND TEMPORARY MONITORING WELLS.
R:\ENV\27994.022\LINF2A.DWG 02/16/00
FIGURE 3A
APPROXIMATE MONITORING WELL AND GEOPROBE LOCATIONS
LINCOLN INDUSTRIAL
ONE LINCOLN WAY
ST. LOUIS, MISSOURI
DATE: Feb. 16, 2000
JOB NO.: 27994-022-045
DRAWN BY: JMS
CHK'D BY: EKF
SCALE: NO SCALE
DAMES & MOORE

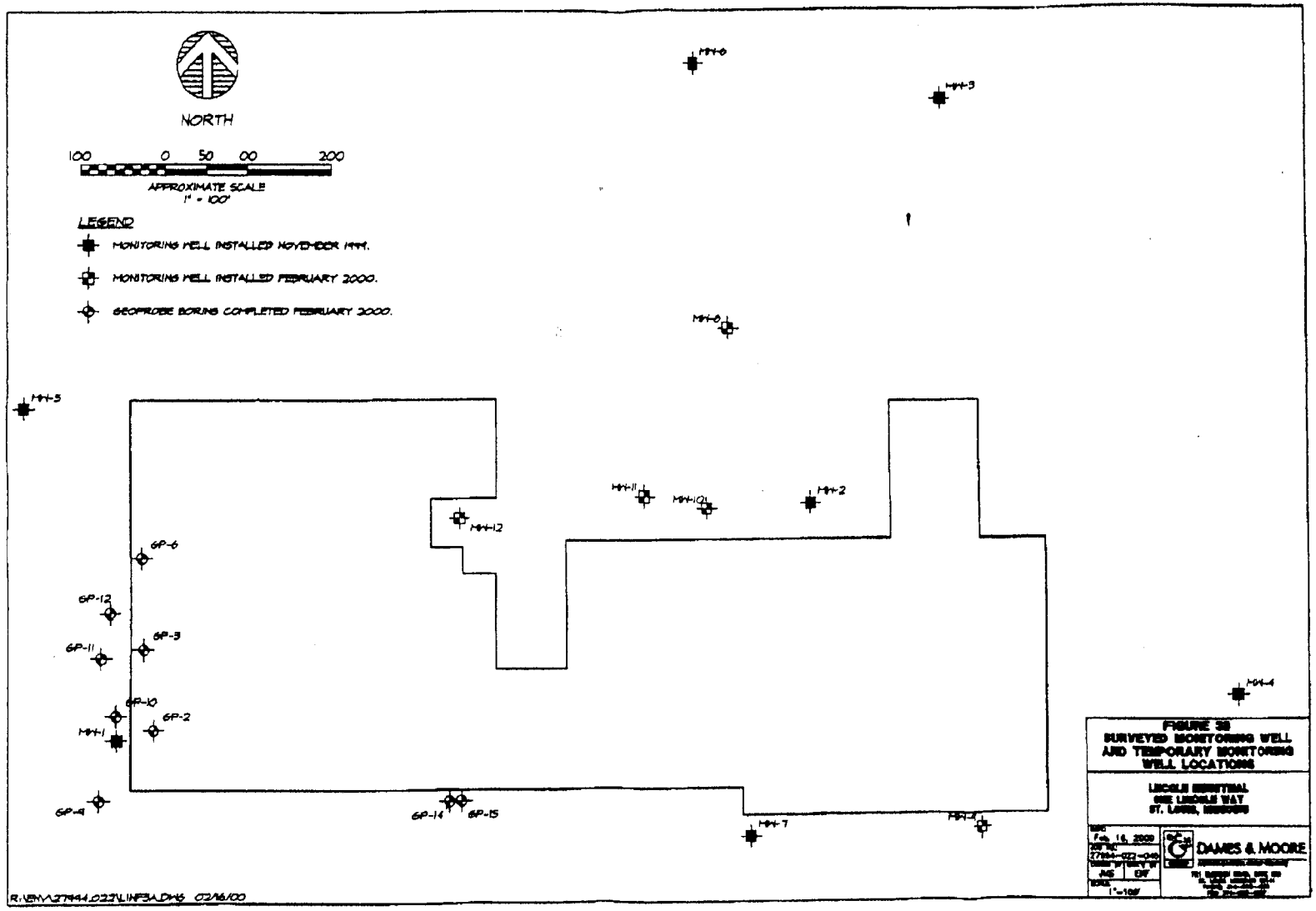
NORTH
100 0 50 00 200
APPROXIMATE SCALE
1" = 100'
LEGEND
MONITORING WELL INSTALLED NOVEMBER 1999.
MONITORING WELL INSTALLED FEBRUARY 2000.
GEOPROBE BORING COMPLETED FEBRUARY 2000.
MW-6
MW-3
MW-8
MW-5
MW-11
MW-10
MW-2
MW-12
GP-6
GP-12
GP-3
GP-11
GP-10
GP-2
MW-1
GP-9
GP-14
GP-15
MW-7
MW-4
FIGURE 38
SURVEYED MONITORING WELL AND TEMPORARY MONITORING WELL LOCATIONS
LINCOLN INDUSTRIAL
ONE LINCOLN WAY
ST. LOUIS, MISSOURI
Feb. 16, 2000
27994-022-040
JMS
EMF
1"=100'
DAMES & MOORE
R:\ENV\27994.022\LINF3A.DWG 02/16/00

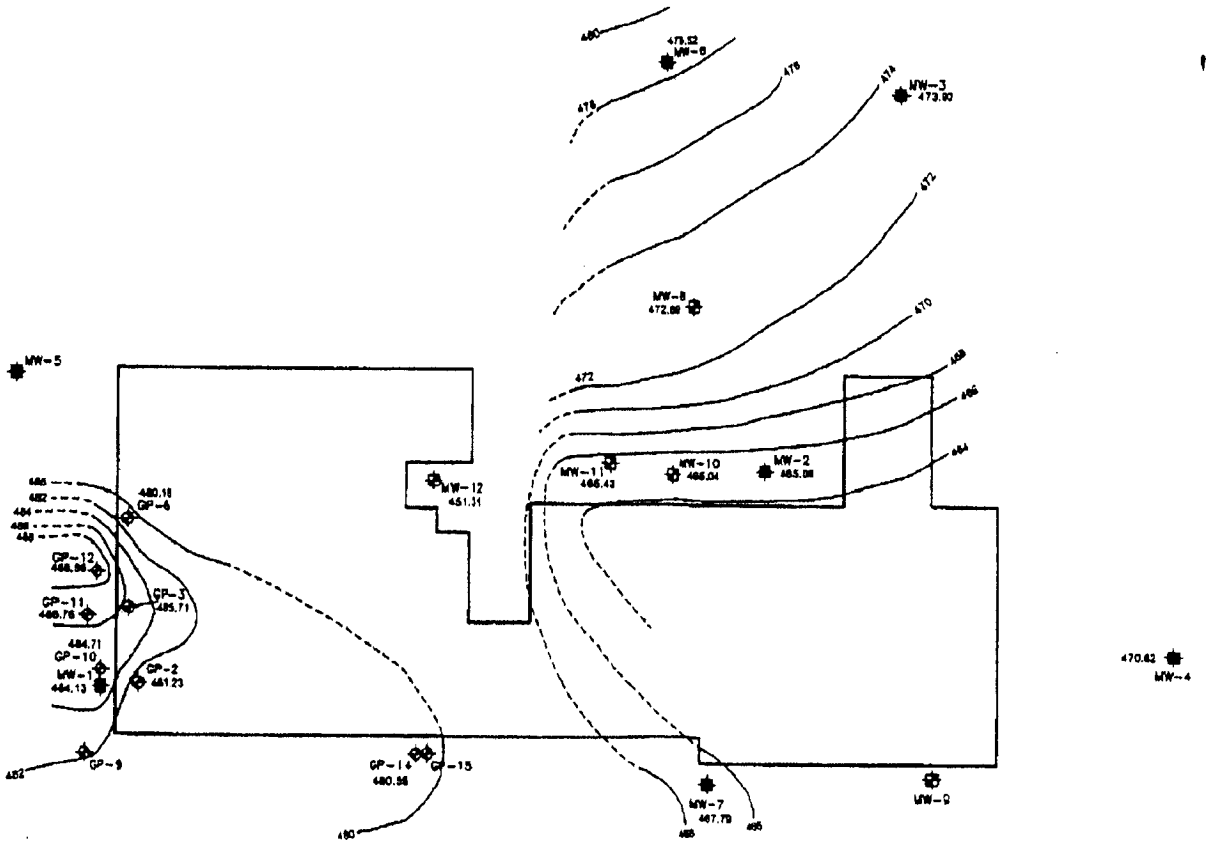

N

LEGEND

- MONITORING WELL LOCATION (INSTALLED NOV. 1999)
- MONITORING WELL LOCATION (INSTALLED FEB. 2000)
- GEOPROBE BORING (COMPLETED FEB. 2000)

APPROX. SCALE (ft.)
0 150

ENVIRON

Shallow Groundwater Potentiometric Map
February 2000
Lincoln Industrial - Pentair, Inc.
St. Louis, Missouri

DATE	DRAWING NUMBER	FIGURE
5/01/01	21-63008	4
DRAWN BY APR	APPROVED / REVISED	

APPENDIX A

SOIL BORING LOGS

BORING MW-1

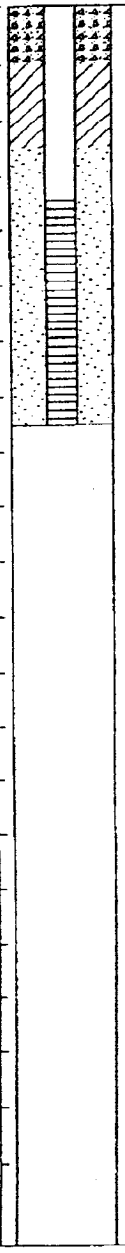

Depth in feet	PID	REC (in)	SAMPLER	SYMBOL	USCS	DESCRIPTION
0		48				Concrete
2					FILL	Gray crushed stone (fill)
					CL	Olive gray to gray silty clay, soft, moist (fill)
4						Dark gray to black silt, very moist (fill)
6	446	60			ML	grading to olive gray, soft, wet
	112					
8						
10	42.5	60			CL	Olive gray silty clay, stiff, moist
						grading to gray
12	4.7					
14						grading with brownish yellow hematite staining
16	18					End of Boring Monitoring well installed at 15 feet bgs on 11-29-99.
18						
20						
22						
24						
26						
28						
30						
32						
34						
36						
38						
40						
42						
44						

MFE Geo 4/26/01
based upon reviewed the field log

Driller: ROBERTS
Sampler: 5-foot CME or 2-foot split-spoon

LOG OF BORING AND WELL CONSTRUCTION DETAIL

Pentair
Lincoln Industrial Facility
27994-022-045

Dames & Moore

BORING MW-2

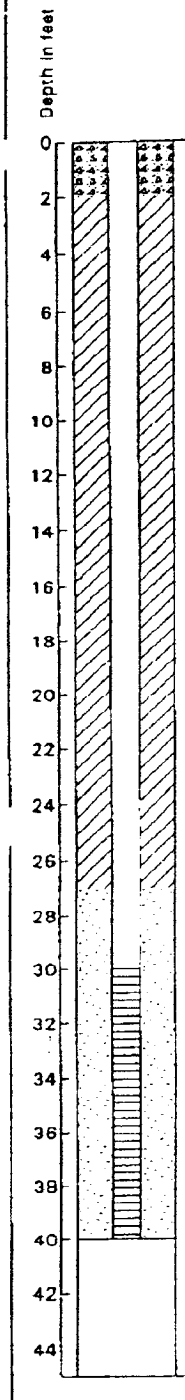

PID	REC (in)	SAMPLER	SYMBOL	USCS	DESCRIPTION
	40				Asphalt
					Gray crushed stone and silt (fill)
				CL	Brown silty clay, soft, moist
0	60				
0.2					grading with light brown mottling
0	60				
					grading to brown/gray mottled, stiff, little moist
0.1					
0.1	60				
0.4					grading very stiff grading with dark gray vertical streaks from 17' to 18'
	60				grading with brownish yellow
0					
0	60				
				ML	Brownish yellow clayey silt, soft, very moist
	60			CL	Brownish yellow/gray/purple silty clay with gravel, hard, little moist grading to brownish yellow
0					
				ML	Brown clayey silt, soft, very moist
0	60			CL	Brown silty clay, stiff, moist
					End of Boring Monitoring well installed at 40 feet bgs on 11-24-99.

Driller: ROBERTS
Sampler: 5-foot CME or 2-foot split-spoon

LOG OF BORING AND WELL CONSTRUCTION DETAIL

Pentair
Lincoln Industrial Facility
27994-022-045

Dames & Moore

#FC
4-26-01
No changes or edits.

BORING MW-3

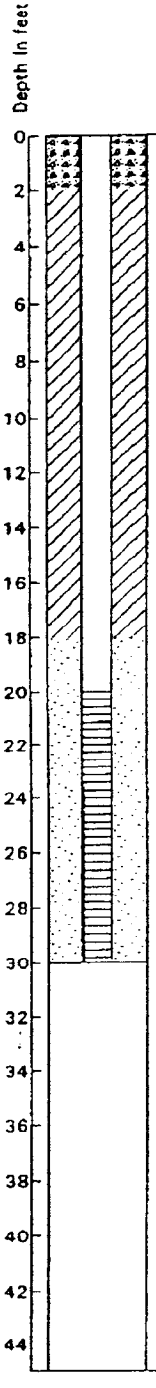

PID	REC (in)	SAMPLER	SYMBOL	USCS	DESCRIPTION
					Brown topsoil, grass roots Gray crushed stone, concrete and silt (fill)
	24			CL	Brown silty clay, stiff, little moist
0	60				
0				ML	Brown silt, soft, moist
				CL	Brown silty clay stiff, little moist
0	60			ML	Gray to dark gray silt, soft, moist
				CL	Brown silty clay, soft, moist
0					grading to gray with dark brown nodules
0	60				grading with light gray mottling, very stiff, little moist
0					
	60				grading with brownish yellow
0					
				ML	Gray clayey silt, soft, moist
				CL	Light gray silty clay with brownish yellow hematite staining
0	60				
				ML	Gray/brownish yellow mottled clayey silt, soft, moist
				CL	Light gray silty clay with brownish yellow hematite staining
0					End of Boring Monitoring well installed at 30 feet bgs on 11-24-99.

Driller: ROBERTS
Sampler: 5-foot CME or 2-foot split-spoon

LOG OF BORING AND WELL CONSTRUCTION DETAIL

Pentair
Lincoln Industrial Facility
27994-022-045

Dames & Moore

APE 4-26-01
Edits based on review of field log

BORING MW-4

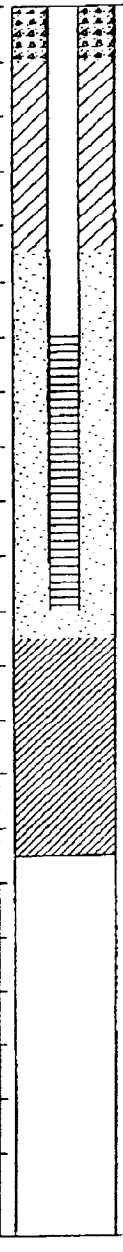

Depth in feet	PID	REC (in)	SAMPLER	SYMBOL	USCS	DESCRIPTION
0		10				Grass and gravel
	0					Brown silty clay with limestone gravel, stiff, little moist (fill)
2		8				
	0					grading without limestone gravel
4		17			ML	Brown/gray mottled clayey silt, stiff, moist
	0					
6					CL	Brown/gray mottled silty clay, stiff, moist
8		20				
	0					
10						
12		16				
	0					
14						
16		24			CH	Brownish yellow shaley clay, stiff, dry
	0					
18						
20		6				grades with light gray, very stiff, dry
	0					
22		12				
	0	12				Brownish yellow siltstone, hard, dry
24	0					
26	0	12				
28						Brownish yellow shale
	0	12				
30						
32						End of Boring Auger refusal at 31 feet bgs. Hole backfilled with hydrated bentonite chips to 23 feet bgs and filter sand from 22 to 23 feet bgs. Monitoring well installed at 22 feet bgs on 11-24-99.
34						
36						
38						
40						
42						
44						

Driller: ROBERTS
Sampler: 5-foot CME or 2-foot split-spoon

LOG OF BORING AND WELL CONSTRUCTION DETAIL

Pentair
Lincoln Industrial Facility
27994-022-045

Dames & Moore

MPF 4-26-01
No exits. Unless regarding CH, siltstone and shale description

BORING MW-5

Depth in feet	PID	REC (in)	SAMPLER	SYMBOL	USCS	DESCRIPTION
0		36				Asphalt Gray crushed stone (fill)
2					CL	Gray silty clay, stiff, little moist
	1.0					
4						
6	0	60				Brown/gray mottled silty clay with dark brown nodules, soft, little moist
8	0.7					grading with no dark brown nodules
10	0	48				Brown silty clay with vertical streaks of brownish yellow hematite staining, stiff, moist
12	0.6					
14	0.9	60				
16						grading with brownish yellow mottling
18	2.8					
20	0.9	60				grading with gray
22	0.4					Light brown clay, very stiff, little moist
24	0.5	60				
26	0					grading with gray mottling
28						
30	0	60				grading with brownish yellow hematite staining
32	0					Brownish yellow/gray mottled silty clay, very stiff, little moist
34	0	60				
36						grading to light gray
38	0					grading with brownish yellow mottling, friable, dry
40	0	60				
	0				ML CH	Brownish yellow clayey, gravelly silt, soft, moist Purplish gray/gray mottled shaley clay, friable, hard, dry
42						
44						

Flush-Mount Surface Casing

Concrete

2" PVC Riser

High-Solids Bentonite Slurry Grout

Hydrated Bentonite Chips

2" #10 Slot PVC Screen

Driller: ROBERTS

Sampler: 5-foot CME or 2-foot split-spoon

LOG OF BORING AND WELL CONSTRUCTION DETAIL

Pentair

Lincoln Industrial Facility

27994-022-045

Dames & Moore

BORING MW-5

Depth in feet		PID	REC (in)	SAMPLER	SYMBOL	USCS	DESCRIPTION
46		0	60				grading to brownish yellow
48		0					
50	20/40 Filter Sand Pack						No Sampling
52							
54							
56							End of Boring at Auger Refusal Monitoring well installed at 56.5 feet bgs on 11-23-99.
58							
60							
62							
64							
66							
68							
70							
72							
74							
76							
78							
80							
82							
84							
86							
88							
90							

Auger Refusal

Driller: ROBERTS
Sampler: 5-foot CME or 2-foot split-spoon

LOG OF BORING AND WELL CONSTRUCTION DETAIL

Pentair
Lincoln Industrial Facility
27994-022-045

Dames & Moore

~~Edit~~ MPE 4-26-01
Edits based upon review of field log. Unclear regarding CH and purple description

BORING MW-6

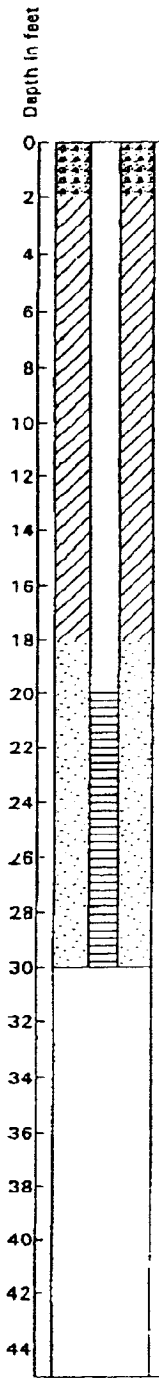

PID	REC (in)	SAMPLER	SYMBOL	USCS	DESCRIPTION
	36				Gravel and grass Gray crushed stone (fill)
					Brown clay, silt, and gravel (fill)
0	24				grading with broken concrete pieces
				CL	Brown silty clay, stiff, little moist
0	60				
					grading to olive gray, soft, moist
0.5				ML	Olive gray clayey silt, soft, very moist
				CL	Olive gray silty clay, soft, moist
1.5	60				grading with brownish yellow hematite staining
0					grading with brown and gray mottling
0.3	60			ML	Olive gray clayey silt, soft, wet
0.2				CL	Brown/brownish yellow/gray mottled silty clay, stiff, little moist
				ML	Gray silt, soft, wet
2.0	60			CL	Brown/brownish yellow/gray mottled silty clay, stiff, little moist
0.1					grading to brownish yellow
0.1				ML	Brownish yellow silt, soft, very moist

End of Boring
Monitoring well installed at 30 feet bgs on 11-23-99.

Driller: ROBERTS
Sampler: 5-foot CME or 2-foot split-spoon

LOG OF BORING AND WELL CONSTRUCTION DETAIL

Pentair
Lincoln Industrial Facility
27994-022-045

Dames & Moore

MK-4-26-01
No elev

BORING MW-7

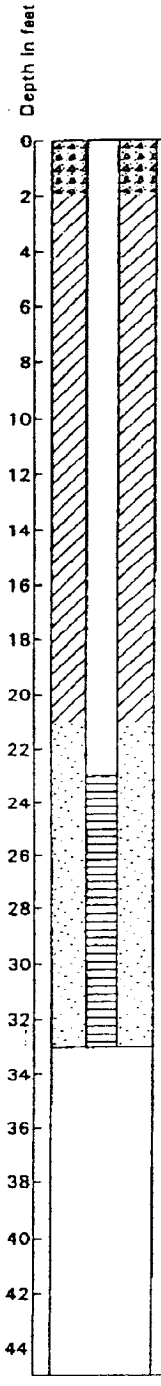

Depth in feet	Description	PID	REC (in)	SAMPLER	SYMBOL	USCS	DESCRIPTION
0	Flush-Mount Surface Casing						Concrete
2	Concrete						Gray crushed stone and silt (fill)
4						CL	Dark gray silty clay, stiff, little moist
6	2" PVC Riser	0	60				grading to gray/brown mottled
8		0					
10	Hydrated Bentonite Chips	0	60				grading to brownish yellow, very stiff, very little moist
12		0					grading with gray mottling
14							
16		0	60				
18							
20			60				
22		0					
24	2" #10 Slot PVC Screen	0	60				
26							
28	20/40 Filter Sand Pack	0					
30		0	24				
32						ML	Brown silt, soft, very moist
						CL	Brown silty clay, stiff, moist
							grading with limestone rock
34							End of Boring Auger Refusal. Monitoring well installed at 33 feet bgs on 11-29-99.
36							
38							
40							
42							
44							

Driller: ROBERTS
Sampler: 5-foot CME or 2-foot split-spoon

LOG OF BORING AND WELL CONSTRUCTION DETAIL

Pentair
Lincoln Industrial Facility
27994-022-045

Dames & Moore

MFC 4-26-01
No edits

PROJECT: 27994.022.046

LOCATION: Pentair-Lincoln Ind.

BORING DATE: 2-4-09 DATUM: GROUND SURFACE DIP: LOGGED: Eric Fritsch

MW-8

DAMES & MOORE

DEPTH SCALE (M / FEET)	BORING METHOD	SOIL PROFILE DESCRIPTION	STRATA PLOT	DEPTH B.G.S. (ft)	Sample Type	Recovery (%)	PID Concentration
		GROUND SURFACE					
		Concrete		0			
		White crushed gravel (fill)		.667	Cont	30	
		Dark brown gravel and cinders (fill)		4.5			
		Dark gray silty clay, stiff, moist (CL)		5.5			
		grading with brownish yellow mottling		7.5	Cont	100	
		grading to gray with hematite staining		9.5			
		grading with dark brown hematite nodules		11	Cont	100	
		grading to brown, soft		13			
		Brown clayey silt, soft, moist (ML)		16			
	HSA	Brown silty clay, stiff, slightly moist (CL)		16.4	Cont	100	
		grading with brownish yellow hematite staining		19			
		grading to very stiff		20	Cont	100	
		Brown clayey gravel with fine sand, very moist (GP)		25			
		Brownish yellow silty clay, stiff, slightly moist (CL)		26	Cont	100	
		grading to gray, very stiff		30	Cont	100	
		grading to brownish yellow, hard		32.5			

Continued on next page

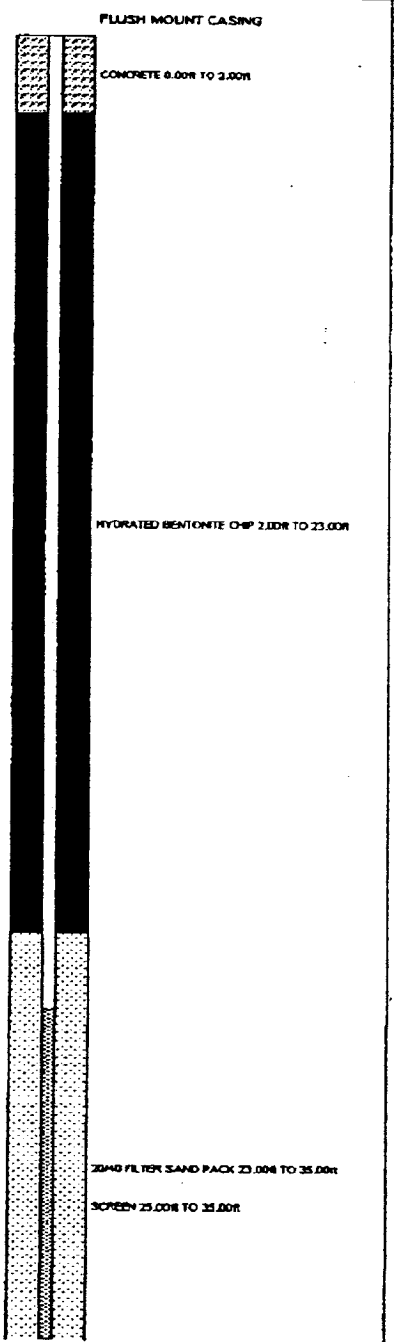

DRAWN: Tiffany Swavelond

Dames & Moore

CHECKED: David Heinze

PROJECT: 27904-022-045

MW-8

LOCATION: Pentair-Lincoln Ind.

BORING DATE: 2-4-08 DATUM: GROUND SURFACE DIP: LOGGED: Eric Fritsch

DEPTH SCALE METERS	DEPTH SCALE FEET	BORING METHOD	SOIL PROFILE DESCRIPTION	STRATA PLOT	DEPTH B.G.S. (ft)	Sample Type	Recovery (%)	Concentration PID 0 2 4 6 8 10	DAMES & MOORE
	34		grading to brownish yellow, hard			Cont	100		
			grading with light gray gravel		34.5				END OF EXPLORATION
			END OF EXPLORATION @ 35.00ft		35.00				
11	36								
	38								
12	40								
	42								
13	44								
14	46								
	48								
15	50	HSA							
	52								
16	54								
17	56								
	58								
18	60								
19	62								
	64								
20	66								

MFE 4-26-01
No edits

DRAWN: Tiffany Sweveland Dames & Moore CHECKED: David Heinze

PROJECT: 27994.022.046

LOCATION: Pentair-Lincoln Ind.

BORING DATE: 2-4-00

DATUM: GROUND SURFACE

DIP:

MW-9

LOGGED: Eric Fritsch

DAMES & MOORE

DEPTH SCALE (METRES)	DEPTH SCALE (FEET)	BORING METHOD	SOIL PROFILE: DESCRIPTION	STRATA PLOT	DEPTH B.G.S. (ft)	Sample Type	Recovery (%)	Concentration (PID)
0	0	HSA	GROUND SURFACE					
			Concrete		0			
1	2, 4		White crushed limestone and silt (fill)		1	Cont	42	
			Brownish yellow and brown mottled silty clay, soft, moist (CL)		4			
2, 3, 4	6, 8, 10, 12, 14		grading to brownish yellow, stiff, slightly moist		8	Cont Cont	100 100	
5, 6	16, 18, 20		grading to gray with hematite staining, very stiff		16	Cont	100	
7	22, 24		grading with brownish yellow and gray mottling, hard, dry		20.5	Cont	100	
			grading to light brown and gray mottled with little purple		24			
8	26, 28		grading to brownish yellow, hard		26	Cont	100	
9	30		grading to brownish yellow shale, hard, dry (SH)		29	Cont	100	
10	32		END OF EXPLORATION @ 32.00ft ~~Auger Refusal~~		32.00			

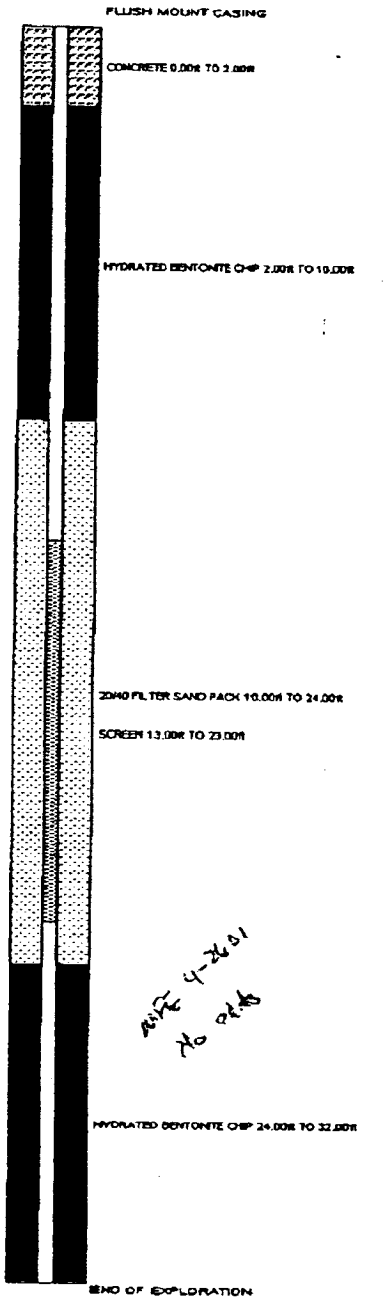

Note 4-26-01
No odds

DRAWN: Tiffany Swoveland

Dames & Moore

CHECKED: David Heinze

PROJECT: 27394-022-046

MW-10

LOCATION: Pentair-Lincoln Ind.

BORING DATE: 2-7-00 DATUM: GROUND SURFACE DIP: LOGGED: Eric Fritsch

DAMES & MOORE

DEPTH SCALE METERS	DEPTH SCALE FEET	BORING METHOD	SOIL PROFILE DESCRIPTION	STRATA PLOT	DEPTH B.G.S. (ft)	Samples Type	Samples Recovery (%)	Concentration PID 0 2 4 6 8 10
			GROUND SURFACE					
0	0		Ashpall		0			
	2		Gray to dark gray silt and crushed gravel (ML)		.5	Cont	40	
1	4		grading to brown medium sand, poorly graded, moist		3			
2	6, 8		Brown silty clay, soft, moist (CL)		5	Cont	83.3	
3	10, 12		grading to stiff		9.5	Cont	100	
4	14, 16, 18	HSA	grading to brownish yellow		13.5	Cont	33.3	
6	20		grading to brown		18.5			
7	22, 24		grading to brownish yellow and brown mottled, very stiff, slightly moist		20	Cont	100	
			grading with hematite nodules		24			
8	26, 28		Brown shaley clay (CH)		28	Cont	100	
			Brown silty gravelly clay (CL)		28			
9	30		grading to brownish yellow, very stiff, slightly moist		29.5			
			Brown silty gravel (GM)		31	Cont	100	
	32		Brown silty clay, moist (CL)		31.5			
10			grading to very soft, wet		32.5			
			END OF EXPLORATION @ 33.00ft Auger Refusal		33.00			

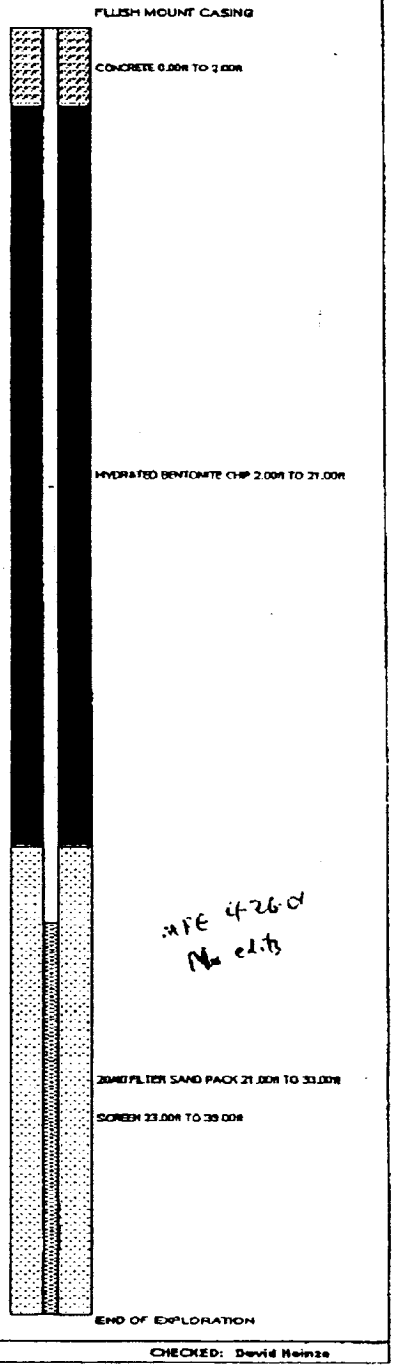

MFE 4-26-01
No edits

DRAWN: Tiffany Sweveland Dames & Moore CHECKED: David Heinze

PROJECT: 27984-022-846

LOCATION: Pentair Lincoln Ind.

BORING DATE: 2-8-99

MW-11

DATUM: GROUND SURFACE

DIP:

LOGGED: Eric Fritsch

DAMES & MOORE

DEPTH SCALE METERS	DEPTH SCALE FEET	BORING METHOD	SOIL PROFILE DESCRIPTION	STRATA PLOT	DEPTH B.G.S. (ft)	Samples Type	Recovery (%)	Concentration PID (0 2 4 6 8 10)
			GROUND SURFACE					
			Concrete		0			
	2		Gray crushed limestone gravel (fill)		1	Cont	100	
1	4		Brown silty clay, soft, moist (CL)		3			
2	6		grading to medium stiff		6	Cont	100	
3	10							
	12					Cont	100	
4	14		grading to brownish yellow and gray mottling, stiff		13			
5	16	HSA						
	18					Cont	100	
6	20		grading very stiff		20			
7	22		grading with brown		22.5	Cont	100	
	24		grading to hard, dry		25			
8	26		grading with gray and brownish yellow mottling		27	Cont	100	
	28		Gray shaley clay, hard, dry (CH)		28			
9	30		grading to purple and gray mottled		30			
	32		grading with brownish yellow		32	Cont	100	
10			Continued on next page					

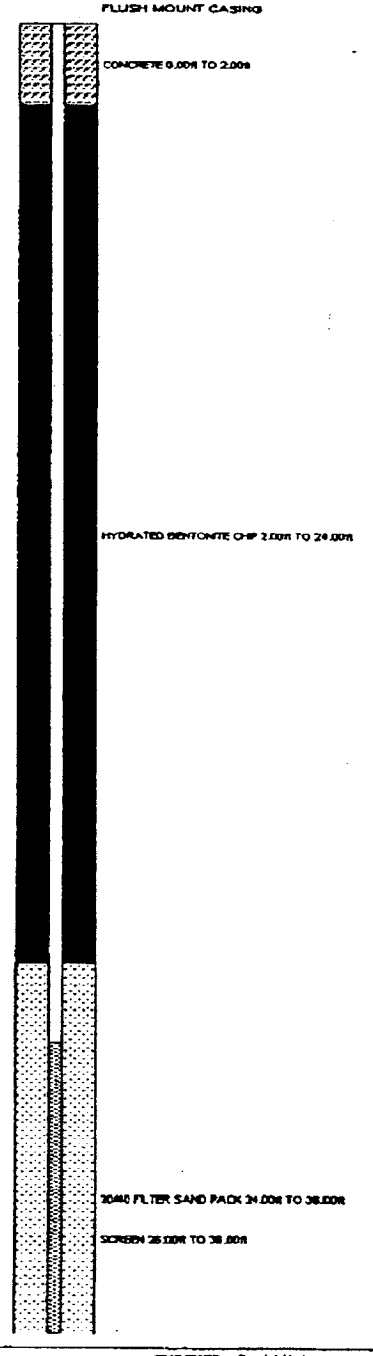

DRAWN: Tiffany Swaveland

Dames & Moore

CHECKED: David Heinz

PROJECT: 27994-022-046

LOCATION: Pentair-Lincoln Ind.

BORING DATE: 2-8-08

MW-11

DATUM: GROUND SURFACE

DIP:

LOGGED: Eric Fritsch

DAMES & MOORE

DEPTH SCALE METERS	DEPTH SCALE FEET	BORING METHOD	SOIL PROFILE DESCRIPTION	STRATA PLOT	DEPTH B.G.S. (ft)	Samples Type	Samples Recovery (%)	Concentration (ppm) 0 2 4 6 8 10
	34		grading with brownish yellow					
			grading to light gray and brownish yellow mottled		34	Cont	100	
			grading with shale and limestone fragments		35	Cont	100	
11	36		END OF EXPLORATION @ 36.00ft Auger refusal		36.00			
	38							
12	40							
	42							
13	44							
14	46							
	48							
15	50	HSA						
	52							
16	54							
17	56							
	58							
18	60							
	62							
19	64							
20	66							

END OF EXPLORATION

MFC 4-26-01
No data

DRAWN: Tiffany Swoveland

Dames & Moore

CHECKED: David Heinze

PROJECT: 27994-022-046

MW-12

LOCATION: Pentair-Lincoln Ind.

BORING DATE: 2-8-00 DATUM: GROUND SURFACE DIP: LOGGED: Eric Fritsch

DAMES & MOORE

DEPTH SCALE (METERS)	DEPTH SCALE (FEET)	BORING METHOD	SOIL PROFILE DESCRIPTION	STRATA PLOT	DEPTH B.G.S. (ft)	Samples Type	Recovery (%)	Concentration PID (0 2 4 6 8 10)
			GROUND SURFACE					
0	0		Asphalt		0			
			White crushed rock (fill)		.5			
	2					Cont	83.3	
1	4		Brown silty clay, soft, moist (CL)		2.5			
2	6		grading to brownish yellow, stiff, slightly moist		5	Cont	100	
	8							
3	10		Brown silt, moist (CL)		9.5			
	12		Brown silty clay, soft, moist (CL)		9.9	Cont	80	
4	14		grading with concrete fragments Brief auger refusal.		13			
5	16	HSA	No sampling *		15	None		
	18							
6	20		Brown silty clay, very stiff, slightly moist (CL)		20	Cont	100	
7	22							
	24		grading to brown and gray mottled		24			
8	26		grading to brown and yellowish brown mottled		26	Cont	100	
9	28							
	30		grading with gray mottling and dark brown nodules		30	Cont	100	
10	32							

Continued on next page

FLUSH MOUNT CASING

CONCRETE 0.00ft TO 2.00ft

HYDRATED BENTONITE CHIP 2.00ft TO 20.00ft

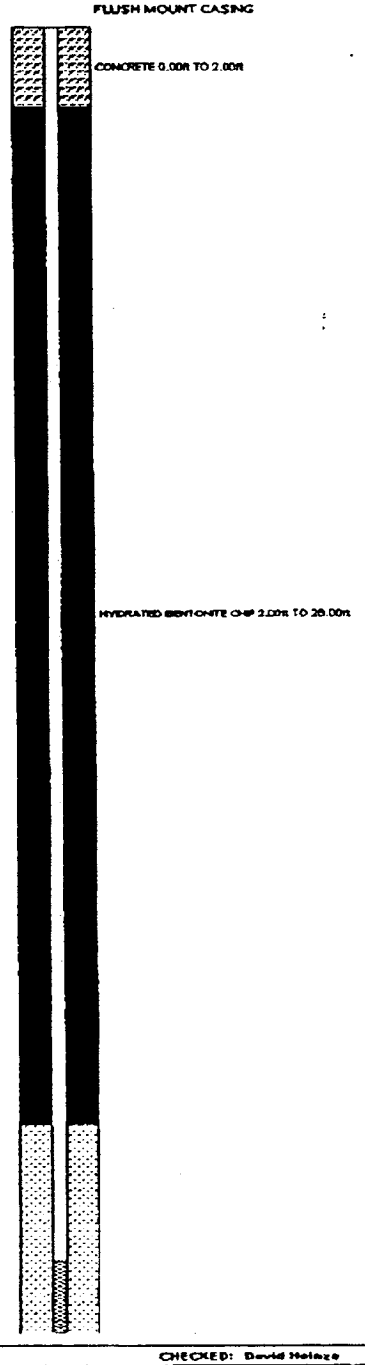

DRAWN: Tiffany Swaveland Dames & Moore CHECKED: David Heinze

PROJECT: 27894-022-046

MW-12

LOCATION: Pontoir-Lincoln Ind.

BORING DATE: 2-8-00 DATUM: GROUND SURFACE DIP: LOGGED: Eric Fritsch

DAMES & MOORE

DEPTH SCALE (METERS)	DEPTH SCALE (FEET)	BORING METHOD	SOIL PROFILE: DESCRIPTION	STRATA PLOT	DEPTH B.G.S. (ft)	Samples: Type	Samples: Recovery (%)	Concentration (PID) 0 2 4 6 8 10
	34		grading with gray mottling and dark brown nodules			Cont	100	
11	36		Brown, gray, and purple mottled shaley clay, very stiff, dry (CH)		35			
	38		grading to brownish yellow, hard		37.5	Cont	100	
12	40		grading to brownish yellow and gray mottled		39.5			
			grading to brown, stiff		40.5	Cont	100	
	42		END OF EXPLORATION @ 41.50ft Auger Refusal		41.50			
13	44							
14	46							
	48							
15	50	HSA						
	52							
16	54							
17	56							
	58							
18	60							
19	62							
	64							
20	66							

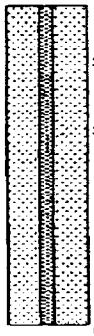

20/40 FILTER SAND PACK 28.00ft TO 41.50ft

SCREEN 31.50ft TO 41.50ft

END OF EXPLORATION

nFE 4-26-4
Est. mud-pen
center of field log

DRAWN: Tiffany Swaveland Dames & Moore CHECKED: David Heinze

PROJECT: 27984-022-046

GP-1

LOCATION: Pontoir-Lincoln Ind.

BORING DATE: 2-7-00 DATUM: GROUND SURFACE DIP: LOGGED: Steven Shroff

DAMES & MOORE

DEPTH SCALE (ME)	DEPTH SCALE (FEET)	BORING METHOD	SOIL PROFILE: DESCRIPTION	STRATA PLOT	DEPTH B.G.S. (ft)	Samples: Lab Sample	Samples: Type	Samples: Recovery (%)	Concentration (PID)
			GROUND SURFACE						
0	0		Concrete		0				
	2		Brown silty clay (fill)		.5		2-in	64.6	
1	4		grading to dark brown and black with brick fragments		3				
	6					7	2-in	66.7	
2	8		Greenish gray silty clay, moist (CL)		6				
3	10		grading to gray, hard, slightly moist		9.5	10	2-in	62.5	
	12		grading with roots		11				
4	14		grading to dry		13		2-in	100	
5	16	GP	END OF EXPLORATION @ 16.00ft		16				
	18								
6	20								
	22								
7	24								
8	26								
	28								
9	30								
	32								
10									

NO INSTALLATION

END OF EXPLORATION

DRAWN: Tiffany Sweveland

Dames & Moore

CHECKED: David Heinze

PROJECT: 27994-022-046

LOCATION: Pentair-Lincoln Ind.

BORING DATE: 2-7-00

DATUM: GROUND SURFACE

GP-2

DIP:

LOGGED: Steven Shroff

DAMES & MOORE

DEPTH SCALE (METRES)	DEPTH SCALE (FEET)	BORING METHOD	SOIL PROFILE: DESCRIPTION	STRATA PLOT	DEPTH B.G.S. (ft)	Lab Sample	Type	Recovery (%)	Concentration (PID)
0	0		GROUND SURFACE						
			Concrete		0				
	2		Dark brown silty clay, medium stiff, moist (CL)		.5		2-in	33.3	◆
1	4								
	6		grading to gray		5		2-in	2	◆
2	8								
	10		grading to dark gray		8.5	10	2-in	62.5	◆
3	12								
4	14		grading to light gray, stiff		12.5	13	2-in	100	◆
5	16								
	18	GP	grading to brown and gray, slightly moist		17.5		2-in	100	
6	20		END OF EXPLORATION @ 20.00ft		20.00				
	22								
7	24								
8	26								
	28								
9	30								
	32								
10									

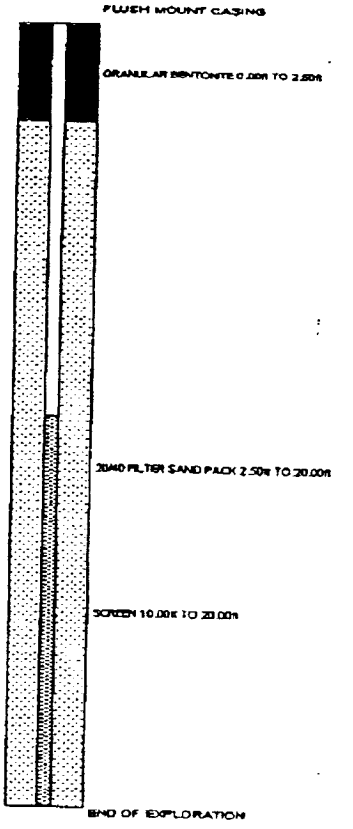

DRAWN: Tiffany Sweveland

Dames & Moore

CHECKED: David Heinze

PROJECT: 27994.022-045

GP-3

LOCATION: Pentair-Lincoln Ind.

BORING DATE: 2-7-08 DATUM: GROUND SURFACE DIP: LOGGED: Steven Shroff

DAMES & MOORE

DEPTH SCALE (MET)	DEPTH SCALE (FEET)	BORING METHOD	SOIL PROFILE: DESCRIPTION	STRATA PLOT	DEPTH B.G.S. (ft)	Lab Sample	Type	Recovery (%)	Concentration PID (0 2 4 6 8 10)
0	0		GROUND SURFACE						
			Concrete		0				
					.5				
	2		Brown silty clay (CL)			3	2-in	75	
1			Fine to medium sand with fine gravel (SP)		3				
	4				4				
	6					7	2-in	100	
2									
	8								
3	10						2-in	62.5	
	12								
4	14		Brown and gray mottled silty clay, medium stiff, moist (CL)				2-in	100	
5	16								
	18	GP					2-in	100	
6	20								
	22						2-in	100	
7									
	24		END OF EXPLORATION @ 24.00ft		24.00				
8	26								
	28								
9	30								
	32								
10									

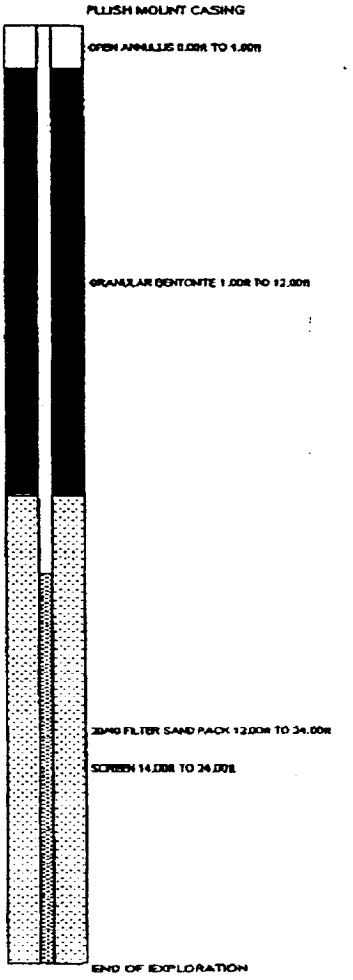

DRAWN: Tiffany Swoveland Dames & Moore CHECKED: David Heinze

PROJECT: 27994.022.046

LOCATION: Pendelr-Lincoln Ind.

BORING DATE: 2-7-00

DATUM: GROUND SURFACE

DIP:

LOGGED: Steven Sheff

GP-4

DAMES & MOORE

DEPTH SCALE METRES	DEPTH SCALE FEET	BORING METHOD	SOIL PROFILE DESCRIPTION	STRATA PLOT	DEPTH B.G.S. (m)	Samples Lab Sample	Type	Recovery (%)	Concentration PID 0 2 4 6 8 10
0	0	GP	GROUND SURFACE		0				
	2		Dark gray silty clay with sand and cinders (fill)			3	2-in	83.3	◆
1	4		grading to gray silty clay		3				
	6		Brownish yellow and gray mottled silty clay, moist (CL)		4.5		2-in	100	◆
2	8		grading to gray		7.5				
3	10				9.5	18	2-in	100	◆
	12								
4	14		grading to light brown with hematite staining				2-in	91.7	◆
5	16								
	18						2-in	100	◆
6	20				19				
	22		grading to brown and gray mottled, moist				2-in	100	◆
7	24		END OF EXPLORATION @ 24.0ft		24				
8	26								
	28								
9	30								
	32								
10									

NO INSTALLATION

END OF EXPLORATION

DRAWN: Tiffany Swaveland

Dames & Moore

CHECKED: David Heinze

PROJECT: 27994.022.046

LOCATION: Pentair-Lincoln Ind.

BORING DATE: 2-7-00

GP-5

DATUM: GROUND SURFACE

DIP:

LOGGED: Steven Shreff

DAMES & MOORE

DEPTH SCALE (M)	FEET	BORING METHOD	SOIL PROFILE: DESCRIPTION	STRATA PLOT	DEPTH (B.G.S. (ft))	Sample: Lab Sample	Type	Recovery (%)	Concentration (PID)
0	0	GP	GROUND SURFACE						
			Concrete		0				
					.5				
	2		Grayish brown silty clay, moist (CL)			3	2-in	81.3	
1	4								
					5				
	6						2-in	75	
2			grading to gray and brown mottled						
	8								
3	10					81	2-in	100	
					10.5				
	12								
4	14		grading to brown with hematite staining				2-in	100	
	16								
5									
	18				17.5		2-in	100	
6	20		grading with increasing moisture						
	22						2-in	100	
7	24		END OF EXPLORATION @ 24.0ft		24				
8	26								
	28								
9	30								
	32								
10									

NO INSTALLATION

END OF EXPLORATION

DRAWN: Tiffany Swaveland

Dames & Moore

CHECKED: David Heinze

PROJECT: [illegible]

LOCATION: Pentair-Lincoln Ind.

BORING DATE: 2-7-00 DATUM: GROUND SURFACE DIP: LOGGED: Steven Sheriff

GP-6

DAMES & MOORE

DEPTH SCALE METERS	DEPTH SCALE FEET	BORING METHOD	SOIL PROFILE DESCRIPTION	STRATA PLOT	DEPTH B.G.S. (ft)	Samples Lab Sample	Type	Recovery (%)	Concentration PID 0 2 4 6 8 10
0	0	GP	GROUND SURFACE						
			Concrete		0				
					.5				
1	2		Light brown silty clay, moist (CL)				2-in	87.5	
	4		grading to yellowish brown with hematite staining, medium stiff		3.5				
					5				
2	6					6	2-in	100	
	8		grading to light brown with brown streaks						
3	10				9.5		2-in	100	
	12								
4	14					14	2-in	100	
5	16		grading to stiff						
	18						2-in	100	
6	20								
	22						2-in	100	
7	24		END OF EXPLORATION @ 24.00ft		24.00				
8	26								
	28								
9	30								
10	32								

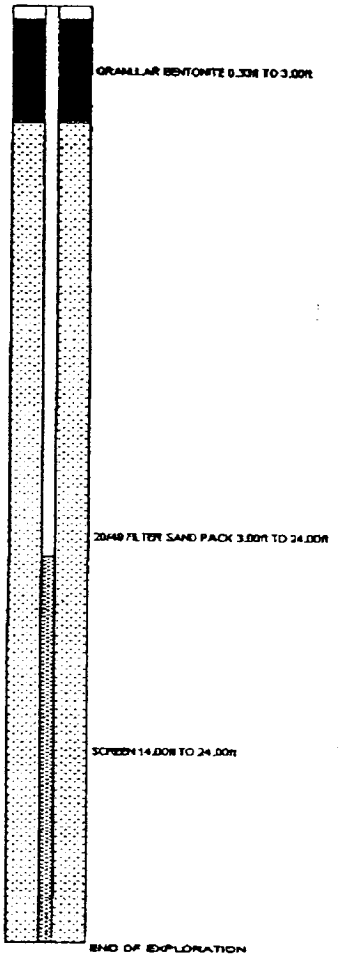

DRAWN: Tiffany Sureveland Dames & Moore CHECKED: David Heinze

PROJECT: 27994.022.045

LOCATION: Pentair-Lincoln Ind.

BORING DATE: 2-8-00 DATUM: GROUND SURFACE DIP: LOGGED: Kevin Barnes

GP-7

DAMES & MOORE

DEPTH SCALE (M)	DEPTH SCALE (FEET)	BORING METHOD	SOIL PROFILE: DESCRIPTION	STRATA PLOT	DEPTH BASE (ft)	Samples: Lab Sample	Type	Recovery (%)	Concentration (ppb)
			GROUND SURFACE						
			Concrete		0				
			Gravel (fill)		.5				
					1				
	2					4	2-in	58	
1			Dark brown to black silty clay, moist (CL)						
	4								
	6				6		2-in	0	
2									
	8								
3	10		grading to greenish gray, wet			10	2-in	87.5	
	12								
4									
	14						2-in	6.25	
			grading to gray gravelly clay, wet		15				
	16		END OF EXPLORATION @ 16.00ft		16				
5		GP							
	18								
6	20								
	22								
7									
	24								
8	26								
	28								
9	30								
	32								
10									

Concentration scale: 0 200 400 600 800 1000

NO INSTALLATION

END OF EXPLORATION

DRAWN: Tiffany Swaveland

Dames & Moore

CHECKED: David Heinze

PROJECT: 27394-022-046

GP-8

LOCATION: Pentair-Lincoln Ind.

BORING DATE: 2-8-00 DATUM: GROUND SURFACE DIP: LOGGED: Kevin Barnes

DAMES & MOORE

DEPTH SCALE METRIC	DEPTH SCALE FEET	BORING METHOD	SOIL PROFILE DESCRIPTION	STRATA PLOT	DEPTH B.G.S. (ft)	Sample Lab Sample	Sample Type	Sample Recovery (%)	Concentration PID (0 200 400 600 800 1000)
			GROUND SURFACE						
0	0		Concrete		0				
			Gravel (till)		.5				
					1				
	2						2-in	64.6	
1			Dark brown to black silty clay, moist (CL)						
	4								
	6				6	6	2-in	75	
2									
	8								
3	10		grading to greenish gray			10	2-in	100	
	12								
4									
	14				14		2-in	100	
			grading to gray, hard, dry						
	16		END OF EXPLORATION @ 16.00ft		16				
5		GP							
	18								
6	20								
	22								
7									
	24								
8	26								
	28								
9	30								
	32								
10									

NO INSTALLATION

END OF EXPLORATION

DRAWN: Tiffany Sweveland Dames & Moore CHECKED: David Heinze

PROJECT: 27994-022-046

LOCATION: Pentair-Lincoln Ind.

BORING DATE: 2-8-00

DATUM: GROUND SURFACE

DIP:

LOGGED: Kevin Barnes

GP-9

DAMES & MOORE

DEPTH SCALE M	DEPTH SCALE FEET	BORING METHOD	SOIL PROFILE DESCRIPTION	STRATA PLOT	DEPTH B.G.S. (ft)	Lab Sample	Samples Type	Recovery (%)	Concentration PID 0 2 4 6 8 10
			GROUND SURFACE						
0	0	GP	Concrete		0				
			Gravel (fill)		.5				
	2		Tan silty clay (CL)		2	4	2-in	62.5	◆
1	4		grading to dark brown to black		3				
	6				6	7	2-in	95.8	◆
2	8		grading to greenish gray, moist						
3	10				10		2-in	100	◆
	12		grading to yellowish brown						
4					12.5				
	14		grading to brownish gray, wet				2-in	100	◆
5	16		END OF EXPLORATION @ 16.00ft		16.00				
	18								
6	20								
	22								
7	24								
8	26								
	28								
9	30								
10	32								

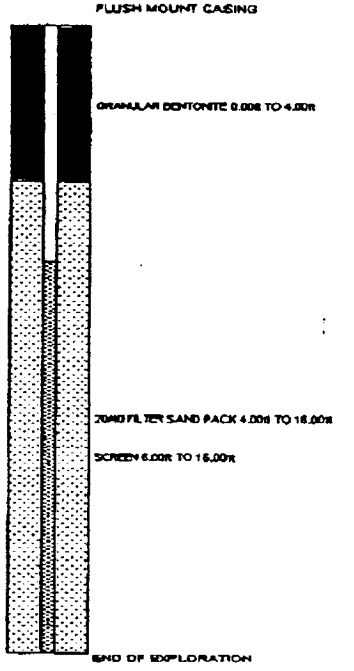

DRAWN: Tiffany Swarvelaind

Dames & Moore

CHECKED: David Heinze

PROJECT: 27994.022.046

GP-10

LOCATION: Pentair-Lincoln Ind.

BORING DATE: 2-8-00 DATUM: GROUND SURFACE DIP: LOGGED: Kevin Barnes

DAMES & MOORE

DEPTH SCALE (METERS)	DEPTH SCALE (FEET)	BORING METHOD	SOIL PROFILE: DESCRIPTION	STRATA PLOT	DEPTH B.G.S. (ft)	Sample: Lab Sample	Sample: Type	Sample: Recovery (%)	Concentration (PID)
			GROUND SURFACE						
0	0		Concrete		0				
			Gravel (fill)		.5				
	2		Brown silty clay (CL)		2	4	2-in	82.5	
1	4		grading to dark brown to black		3				
2	6						2-in	12.5	
	8		grading to gray with gravel, wet		7.5				
3	10		grading with brown mottling		8.5	10	2-in	100	
	12								
4	14		grading to brownish gray		12.5		2-in	100	
5	16	GP	END OF EXPLORATION @ 16.00ft		16.00				
	18								
6	20								
	22								
7	24								
8	26								
	28								
9	30								
	32								
10									

FLUSH MOUNT CASING

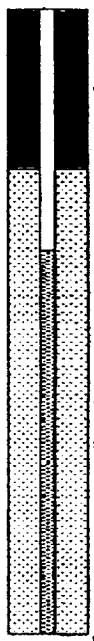

GRANULAR BENTONITE 0.00ft TO 4.00ft

20/40 FILTER SAND PACK 4.00ft TO 16.00ft

SCREEN 6.00ft TO 16.00ft

END OF EXPLORATION

DRAWN: Tiffany Sweveland Dames & Moore CHECKED: David Hulaze

PROJECT: 27994-032-046

LOCATION: Pentair-Lincoln Ind.

BORING DATE: 2-8-00

DATUM: GROUND SURFACE

DIP:

LOGGED: Kevin Barnes

GP-11

DAMES & MOORE

DEPTH SCALE METERS	DEPTH SCALE FEET	BORING METHOD	SOIL PROFILE DESCRIPTION	STRATA PLOT	DEPTH B.G.S. (ft)	Samples Lab Sample	Type	Recovery (%)	Concentration PID 0 200 400 600 800 1000
0	0		GROUND SURFACE						
			Concrete		0				
			Gravel (fill)		.5				
	2		Brownish silty clay (CL)		1.5	4	2-in	93.3	◆
1	4		grading to gray		3.5				
	6				5		2-in	100	◆
2	8		grading to brownish gray, moist						
3	10						2-in	100	◆
	12				12				
4	14		grading to wet				2-in	100	◆
5	16		END OF EXPLORATION @ 16.00ft		16.00				
	18	GP							
6	20								
	22								
7	24								
8	26								
	28								
9	30								
10	32								

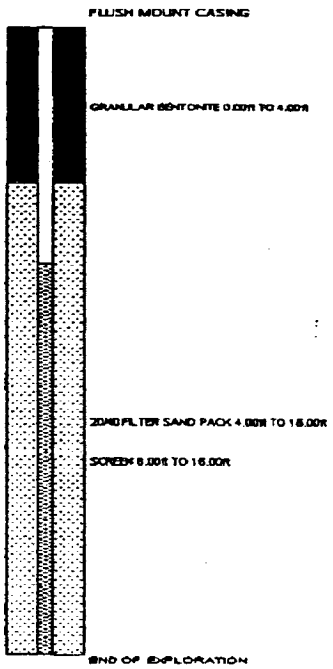

DRAWN: Tiffany Swevelend

Dames & Moore

CHECKED: David Nelson

PROJECT: 27984-022-046

GP-12

LOCATION: Pentair-Lincoln Ind.

BORING DATE: 2-8-08 DATUM: GROUND SURFACE DIP: LOGGED: Kevin Berner

DAMES & MOORE

DEPTH SCALE METRE	DEPTH SCALE FEET	BORING METHOD	SOIL PROFILE DESCRIPTION	STRATA PLOT	DEPTH B.G.S. (ft)	Lab Sample	Type	Recovery (%)	Concentration PID (0 20 40 60 80 100)
0	0	GP	GROUND SURFACE						
			Concrete		0				
			Gravel (fill)		.5				
					1				
	2					4	2-in	87.5	◆
1	4		Greenish gray silty clay, some iron staining (CL)						
	6						2-in	97.5	◆
2	8								
					9.5				
3	10						2-in	100	◆
	12		grading to greenish gray and brown mottled						
	14					14	2-in	100	◆
	16		END OF EXPLORATION @ 16.00ft		16.00				
5	18								
6	20								
	22								
7	24								
8	26								
	28								
9	30								
10	32								

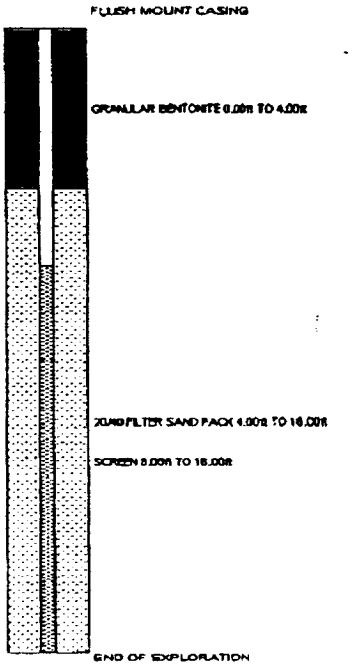

DRAWN: Tiffany Swanstand Dames & Moore CHECKED: David Nelson

PROJECT: 27994.022.846

GP-14

LOCATION: Pentair-Lincoln Ind.

BORING DATE: 2-9-98 DATUM: GROUND SURFACE DIP: LOGGED: Eric Fritsch

DAMES & MOORE

DEPTH SCALE METRE	DEPTH SCALE FEET	BORING METHOD	SOIL PROFILE DESCRIPTION	STRATA PLOT	DEPTH B.G.S. (ft)	Lab Sample	Samples Type	Samples Recovery (%)	Concentration PID (0 200 400 600 800 1000)
			GROUND SURFACE						
0	0		Brown silt and gravel (RI)		0				
	2		Brown silty clay, soft, moist (CL)		1.5		2-in	83.3	
1	4		grading to greenish gray, medium soft		2.5				
2	6		grading to dark gray		5.5		2-in	100	
	8								
3	10		grading to greenish gray		8.5		2-in	100	
	12								
	14		grading with dark gray streaks		14		2-in	100	
5	16	GP	grading to brown, stiff		16				
6	18		grading to greenish gray, soft, moist		17.5		2-in	100	
	20								
	22		Gray clayey silt, very soft, wet (ML)		22		2-in	100	
7	24		Brown silty clay, stiff, moist (CL)		23		2-in	100	
8	26								
			END OF EXPLORATION @ 27.00ft		27.00				
	28								
9	30								
	32								
10									

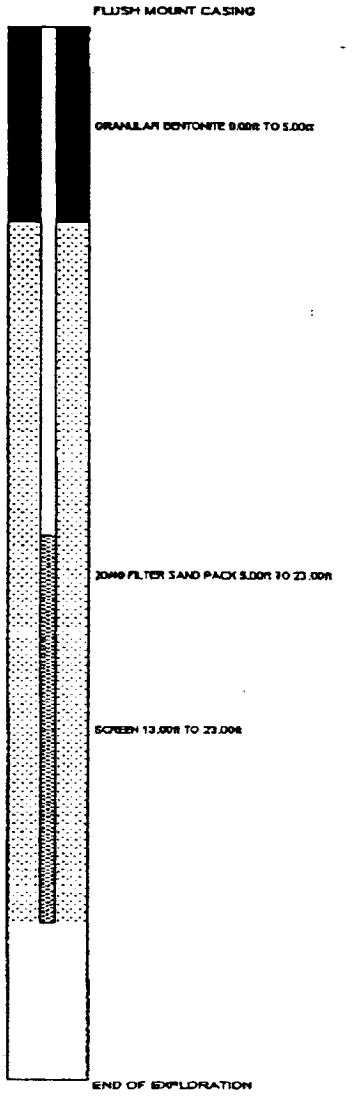

DRAWN: Tiffany Swaveland Dames & Moore CHECKED: David Heinze

PROJECT: 27994-022-045

GP-15

LOCATION: Peatair-Lincoln Ind.

BORING DATE: 2.9.00 DATUM: GROUND SURFACE DIP: LOGGED: Eric Fritsch

DEPTH SCALE METR.	FEET	BORING METHOD	SOIL PROFILE DESCRIPTION	STRATA PLOT	DEPTH B.G.S. (ft)	Sample Lab Sample	Type	Recovery (%)	Concentration PID 0 2 4 6 8 10
			GROUND SURFACE						
0	0		Brown silt and gravel (fill)		0				
	2		Brown silty clay, medium stiff, moist (CL)		1.5		2-in	62.5	
1	4								
	6						2-in	75	
2	8				8				
3	10		grading to brown and gray mottled				2-in	100	
	12				12				
	14		grading with brownish yellow				2-in	83.3	
5	16				16				
	18	GP	grading to brownish yellow				2-in	100	
6			grading to brown		19.5				
	20				20				
	22		grading to brown to brownish yellow, stiff, little moist				2-in	100	
7	24				24.5				
8	26		grading to gray with brownish yellow mottled, very stiff				2-in	100	
	28		END OF EXPLORATION @ 28.00ft		28.00				
9	30								
	32								
10									

DAMES & MOORE

FLUSH MOUNT CASING

GRANULAR BENTONITE 0.00ft TO 5.00ft

20/40 FILTER SAND PACK 5.00ft TO 23.50ft

SCREEN 13.50ft TO 23.50ft

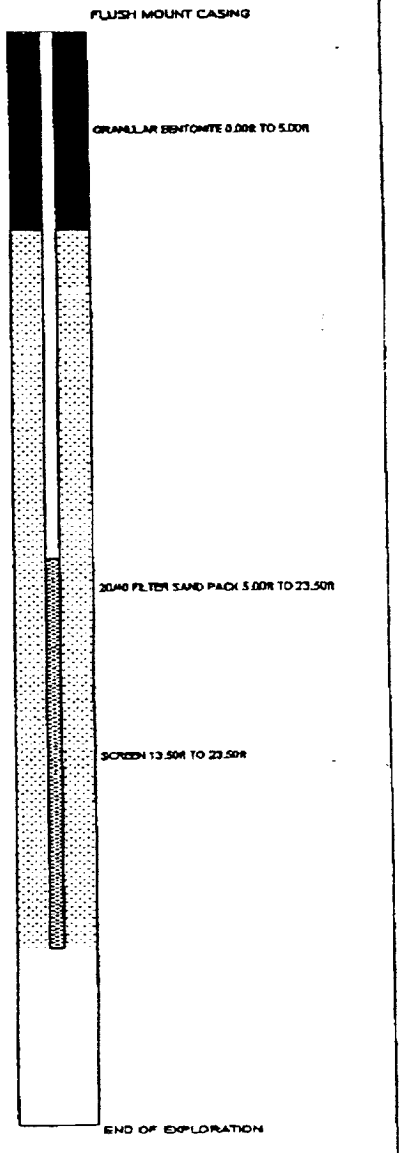

END OF EXPLORATION

DRAWN: Tiffany Sweveland Dames & Moore CHECKED: David Heinze

APPENDIX B

MONITORING WELL CONSTRUCTION DIAGRAMS

MONITORING WELL CONSTRUCTION DIAGRAM

GROUND SURFACE ELEVATION 487.16

TOP OF INNER WELL CASING ELEVATION 486.68

DATUM 500 feet (arbitrarily picked at site)

JOB NUMBER 27994-022-045

BORING NUMBER MW-1

INSTALLATION DATE 11/29/99

LOCATION Lincoln Industrial, STL, MO

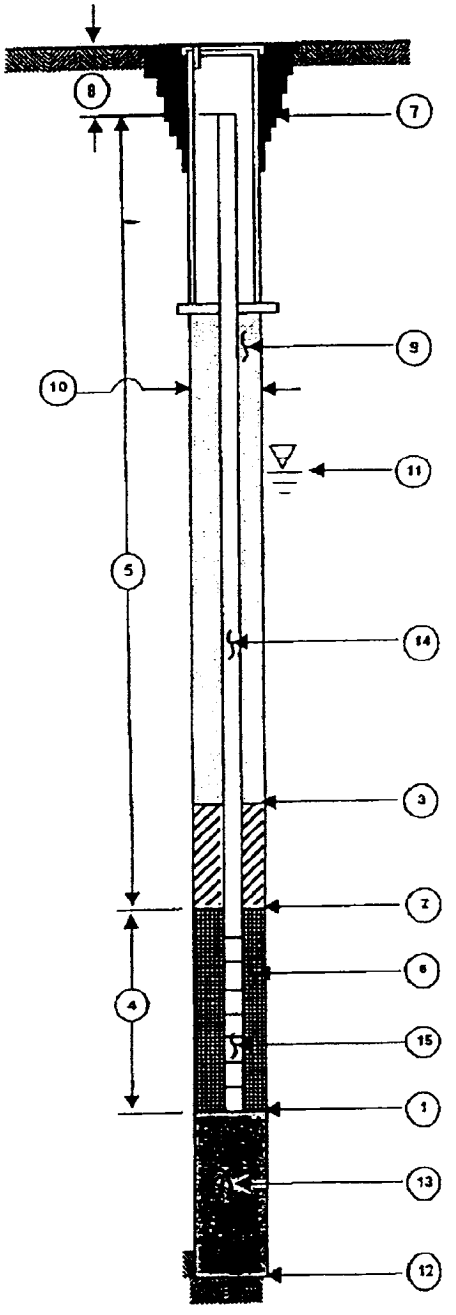

(1) DEPTH TO BOTTOM OF WELL POINT OR SLOTTED PIPE 15 FEET.*

(2) DEPTH TO BOTTOM OF SEAL (IF INSTALLED) 5 FEET.*

(3) DEPTH TO TOP OF SEAL (IF INSTALLED) 2 FEET.*

(4) LENGTH OF WELL SCREEN 8 FEET. SLOT SIZE 0.010 inch

(5) TOTAL LENGTH OF RISER PIPE 6.52 FEET AT 2 INCH DIAMETER.

(6) TYPE OF PACK AROUND WELL POINT OR SLOTTED PIPE 20/40 Sieve Size Filter Sand

(7) CONCRETE CAP? YES NO (CIRCLE ONE)

(8) DEPTH TO TOP OF INNER CASING BELOW GROUND SURFACE 0.48 FEET.

(9) TYPE OF UPPER BACKFILL hydrated bentonite chips

(10) BOREHOLD DIAMETER 8.75 INCHES.

(11) DEPTH TO GROUNDWATER 4.08 FEET BELOW TOP OF INNER CASING 24 HOURS AFTER WELL DEVELOPMENT

(12) TOTAL DEPTH OF BOREHOLE 15 FEET.*

(13) TYPE OF LOWER BACKFILL N/A

(14) PIPE MATERIAL schedule 40 PVC

(15) SCREEN MATERIAL schedule 40 PVC

* (DEPTH FROM GROUND SURFACE)

MONITOR WELL INSTALLATION DETAILS

DAMES & MOORE
A DAMES & MOORE GROUP COMPANY

F:/BOILER/EXCEL/MONITORWELLFLUSH

MONITORING WELL CONSTRUCTION DIAGRAM

GROUND SURFACE ELEVATION 485.56

TOP OF INNER WELL CASING ELEVATION 485.02

DATUM 500 feet (arbitrarily picked at site)

JOB NUMBER 27994-022-045

BORING NUMBER MW-2

INSTALLATION DATE 11/24/99

LOCATION Lincoln Industrial, STL, MO

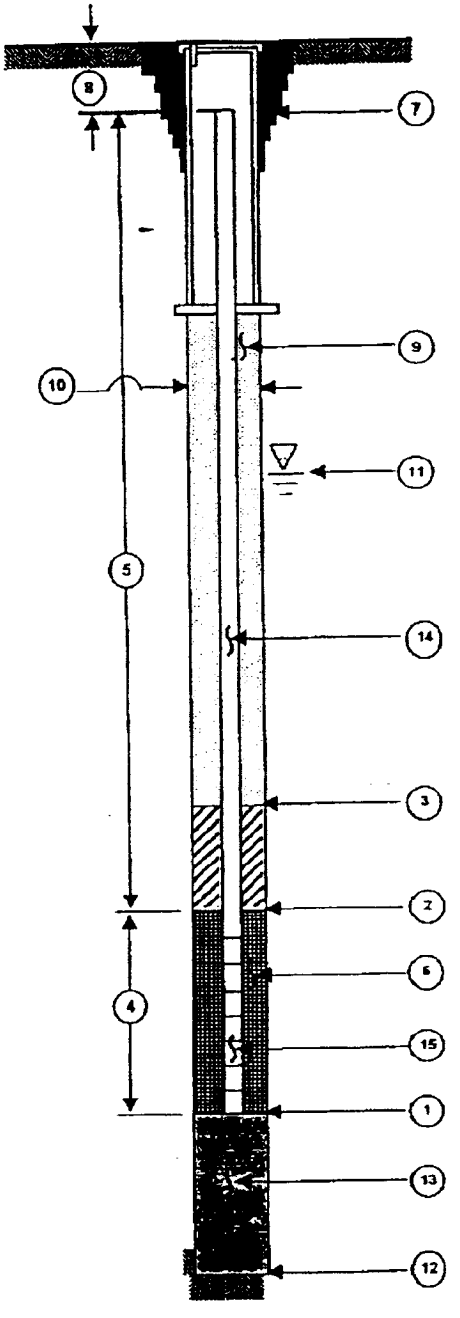

(1) DEPTH TO BOTTOM OF WELL POINT OR SLOTTED PIPE 40 FEET.*

(2) DEPTH TO BOTTOM OF SEAL (IF INSTALLED) 27 FEET.*

(3) DEPTH TO TOP OF SEAL (IF INSTALLED) 2 FEET.*

(4) LENGTH OF WELL SCREEN 10 FEET. SLOT SIZE 0.010 inch.

(5) TOTAL LENGTH OF RISER PIPE 29.46 FEET AT 2 INCH DIAMETER.

(6) TYPE OF PACK AROUND WELL POINT OR SLOTTED PIPE 20/40 Sieve Size Filter Sand.

(7) CONCRETE CAP? YES NO (CIRCLE ONE)

(8) DEPTH TO TOP OF INNER CASING BELOW GROUND SURFACE 0.54 FEET.

(9) TYPE OF UPPER BACKFILL hydrated bentonite chips.

(10) BOREHOLD DIAMETER 8.75 INCHES.

(11) DEPTH TO GROUNDWATER 20.02 FEET BELOW TOP OF INNER CASING 48 HOURS AFTER WELL DEVELOPMENT.

(12) TOTAL DEPTH OF BOREHOLE 40 FEET.*

(13) TYPE OF LOWER BACKFILL N/A

(14) PIPE MATERIAL schedule 40 PVC

(15) SCREEN MATERIAL schedule 40 PVC

*(DEPTH FROM GROUND SURFACE)

MONITOR WELL INSTALLATION DETAILS

DAMES & MOORE
A DAMES & MOORE GROUP COMPANY

P:/BOILER/EXCEL/MONITORWELL.LISH

MONITORING WELL CONSTRUCTION DIAGRAM

GROUND SURFACE ELEVATION 486.37

TOP OF INNER WELL CASING ELEVATION 485.86

DATUM 500 feet (arbitrarily picked at site)

JOB NUMBER 27994-022-045

BORING NUMBER MW-3

INSTALLATION DATE 11/23/99

LOCATION Lincoln Industrial, STL, MO

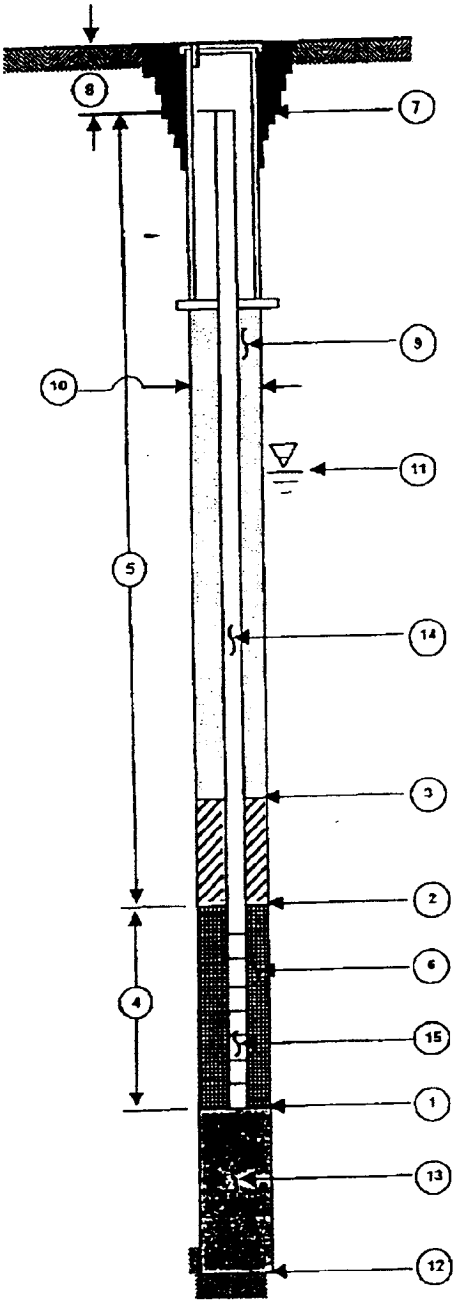

(1) DEPTH TO BOTTOM OF WELL POINT OR SLOTTED PIPE 30 FEET.*

(2) DEPTH TO BOTTOM OF SEAL (IF INSTALLED) 18 FEET.*

(3) DEPTH TO TOP OF SEAL (IF INSTALLED) 2 FEET.*

(4) LENGTH OF WELL SCREEN 10 FEET. SLOT SIZE 0.010 inch

(5) TOTAL LENGTH OF RISER PIPE 19.49 FEET AT 2 INCH DIAMETER.

(6) TYPE OF PACK AROUND WELL POINT OR SLOTTED PIPE 20/40 Sieve Size Filter Sand

(7) CONCRETE CAP? (YES) NO (CIRCLE ONE)

(8) DEPTH TO TOP OF INNER CASING BELOW GROUND SURFACE 0.51 FEET.

(9) TYPE OF UPPER BACKFILL hydrated bentonite chips

(10) BOREHOLD DIAMETER 8.75 INCHES.

(11) DEPTH TO GROUNDWATER 11.98 FEET BELOW TOP OF INNER CASING 48 HOURS AFTER WELL DEVELOPMENT

(12) TOTAL DEPTH OF BOREHOLE 30 FEET.*

(13) TYPE OF LOWER BACKFILL N/A

(14) PIPE MATERIAL schedule 40 PVC

(15) SCREEN MATERIAL schedule 40 PVC

* (DEPTH FROM GROUND SURFACE)

MONITOR WELL INSTALLATION DETAILS

DAMES & MOORE
A DAMES & MOORE GROUP COMPANY

P:/BOILER/EXCEL/MONITORWELL.FLUSH

MONITORING WELL CONSTRUCTION DIAGRAM

GROUND SURFACE ELEVATION 476.65

TOP OF INNER WELL CASING ELEVATION 476.59

DATUM 500 feet (arbitrarily picked at site)

JOB NUMBER 27994-022-045

BORING NUMBER MW-4

INSTALLATION DATE 11/24/99

LOCATION Lincoln Industrial, STL, MO

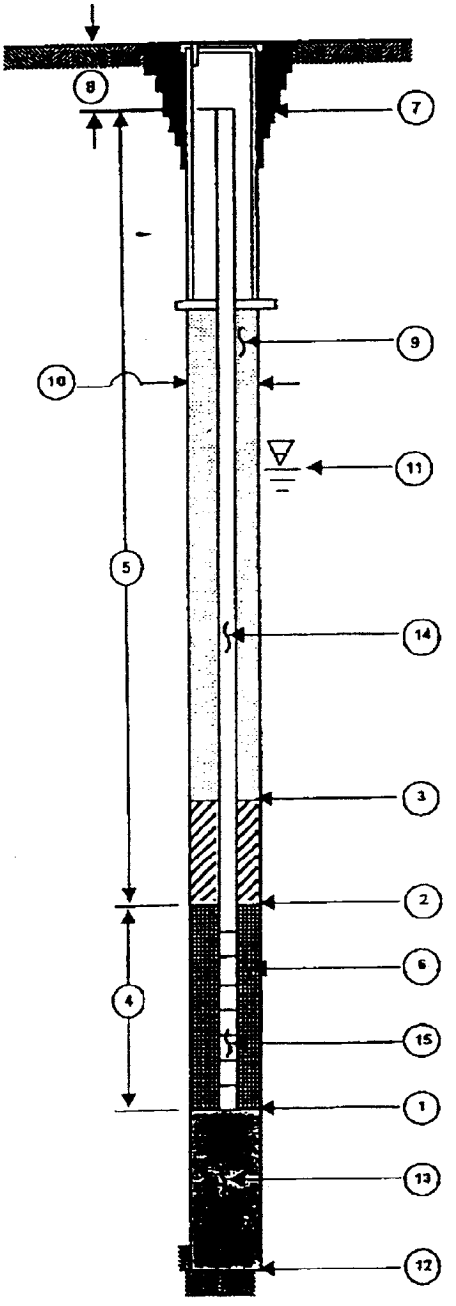

(1) DEPTH TO BOTTOM OF WELL POINT OR SLOTTED PIPE 22 FEET.*

(2) DEPTH TO BOTTOM OF SEAL (IF INSTALLED) 9 FEET.*

(3) DEPTH TO TOP OF SEAL (IF INSTALLED) 2 FEET.*

(4) LENGTH OF WELL SCREEN 10 FEET. SLOT SIZE 0.010 inch

(5) TOTAL LENGTH OF RISER PIPE 11.94 FEET AT 2 INCH DIAMETER.

(6) TYPE OF PACK AROUND WELL POINT OR SLOTTED PIPE 20/40 Filter Sand

(7) CONCRETE CAP? (YES) NO (CIRCLE ONE)

(8) DEPTH TO TOP OF INNER CASING BELOW GROUND SURFACE 0.06 FEET

(9) TYPE OF UPPER BACKFILL hydrated bentonite chips

(10) BOREHOLD DIAMETER 8.75 INCHES.

(11) DEPTH TO GROUNDWATER 20.1 FEET BELOW TOP OF INNER CASING 48 HOURS AFTER WELL DEVELOPMENT

(12) TOTAL DEPTH OF BOREHOLE 31 FEET.*

(13) TYPE OF LOWER BACKFILL hydrated bentonite chips to 23' bgs; filter sand to 22' bgs

(14) PIPE MATERIAL schedule 40 PVC

(15) SCREEN MATERIAL schedule 40 PVC

* (DEPTH FROM GROUND SURFACE)

MONITOR WELL INSTALLATION DETAILS

DAMES & MOORE
A DAMES & MOORE GROUP COMPANY

P:/BOILER/EXCEL/MONITORWELL.FLSH

MONITORING WELL CONSTRUCTION DIAGRAM

GROUND SURFACE ELEVATION 500.28

TOP OF INNER WELL CASING ELEVATION 499.85

DATUM 500 feet (arbitrarily picked at site)

JOB NUMBER 27994-022-045

BORING NUMBER MW-5

INSTALLATION DATE 11/23/99

LOCATION Lincoln Industrial, STL, MO

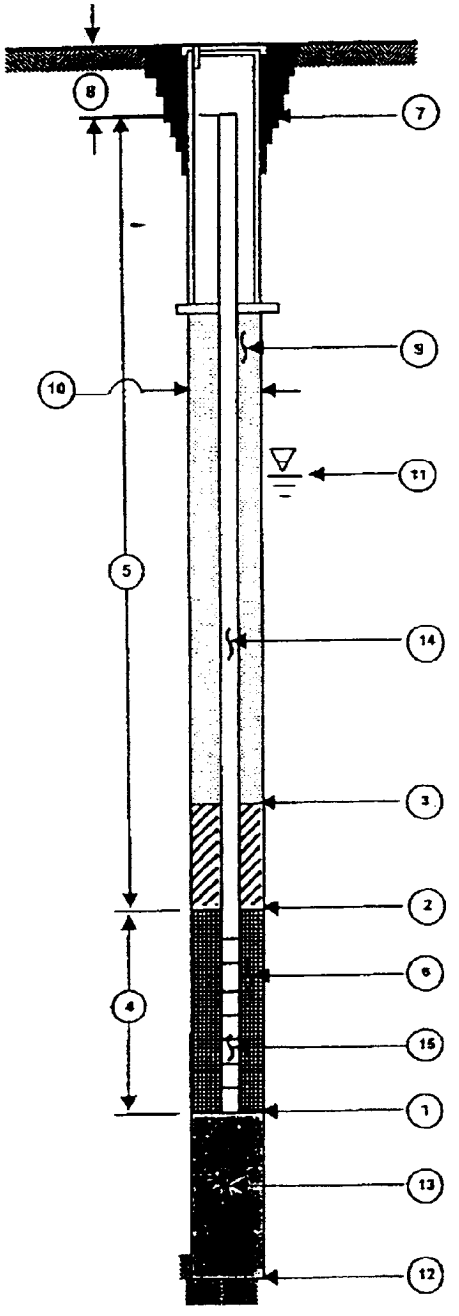

(1) DEPTH TO BOTTOM OF WELL POINT OR SLOTTED PIPE 56.5 FEET.*

(2) DEPTH TO BOTTOM OF SEAL (IF INSTALLED) 39.5 FEET.*

(3) DEPTH TO TOP OF SEAL (IF INSTALLED) 36.5 FEET.*

(4) LENGTH OF WELL SCREEN 15 FEET. SLOT SIZE 0.010 inch

(5) TOTAL LENGTH OF RISER PIPE 41.07 FEET AT 2 INCH DIAMETER.

(6) TYPE OF PACK AROUND WELL POINT OR SLOTTED PIPE 20/40 Sieve Size Filter Sand

(7) CONCRETE CAP? YES NO (CIRCLE ONE)

(8) DEPTH TO TOP OF INNER CASING BELOW GROUND SURFACE 0.43 FEET.

(9) TYPE OF UPPER BACKFILL high solids bentonite slurry grout

(10) BOREHOLD DIAMETER 8.75 INCHES.

(11) DEPTH TO GROUNDWATER 35.75 FEET BELOW TOP OF INNER CASING 48 HOURS AFTER WELL DEVELOPMENT.

(12) TOTAL DEPTH OF BOREHOLE 56.5 FEET.*

(13) TYPE OF LOWER BACKFILL N/A

(14) PIPE MATERIAL schedule 40 PVC

(15) SCREEN MATERIAL schedule 40 PVC

* (DEPTH FROM GROUND SURFACE)

MONITOR WELL INSTALLATION DETAILS

DAMES & MOORE
A DAMES & MOORE GROUP COMPANY

P:/BOILER/EXCEL/MONITORWELL.XLS

MONITORING WELL CONSTRUCTION DIAGRAM

GROUND SURFACE ELEVATION 490.08

TOP OF INNER WELL CASING ELEVATION 489.58

DATUM 500 feet (arbitrarily picked at site)

JOB NUMBER 27994-022-045

BORING NUMBER MW-6

INSTALLATION DATE 11/23/99

LOCATION Lincoln Industrial, STL, MO

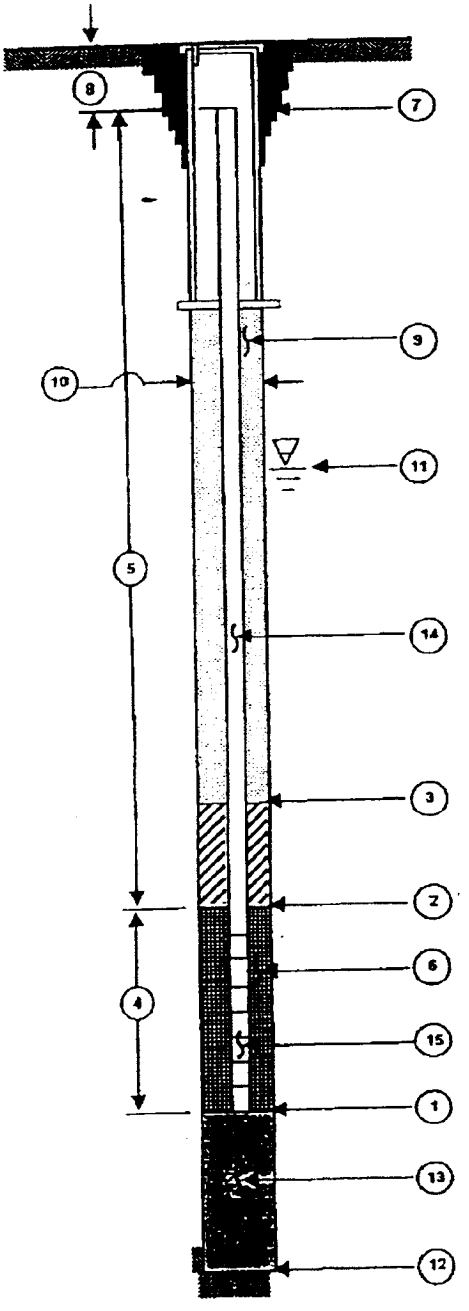

(1) DEPTH TO BOTTOM OF WELL POINT OR SLOTTED PIPE 30 FEET.*

(2) DEPTH TO BOTTOM OF SEAL (IF INSTALLED) 18 FEET.*

(3) DEPTH TO TOP OF SEAL (IF INSTALLED) 2 FEET.*

(4) LENGTH OF WELL SCREEN 10 FEET. SLOT SIZE 0.010 inch

(5) TOTAL LENGTH OF RISER PIPE 19.5 FEET AT 2 INCH DIAMETER

(6) TYPE OF PACK AROUND WELL POINT OR SLOTTED PIPE 20/40 Sieve Size Filter Sand

(7) CONCRETE CAP? YES NO (CIRCLE ONE)

(8) DEPTH TO TOP OF INNER CASING BELOW GROUND SURFACE 0.5 FEET.

(9) TYPE OF UPPER BACKFILL hydrated bentonite chips

(10) BOREHOLD DIAMETER 8.75 INCHES.

(11) DEPTH TO GROUNDWATER 11.39 FEET BELOW TOP OF INNER CASING 48 HOURS AFTER WELL DEVELOPMENT.

(12) TOTAL DEPTH OF BOREHOLE 30 FEET.*

(13) TYPE OF LOWER BACKFILL N/A

(14) PIPE MATERIAL schedule 40 PVC

(15) SCREEN MATERIAL schedule 40 PVC

* (DEPTH FROM GROUND SURFACE)

MONITOR WELL INSTALLATION DETAILS

DAMES & MOORE
A DAMES & MOORE GROUP COMPANY

P:/BOILER/EXCEL/MONITORWELL.LISH

MONITORING WELL CONSTRUCTION DIAGRAM

GROUND SURFACE ELEVATION 484.97

TOP OF INNER WELL CASING ELEVATION 484.69

DATUM 500 feet (arbitrarily picked at site)

JOB NUMBER 27994-022-045

BORING NUMBER MW-7

INSTALLATION DATE 11/29/99

LOCATION Lincoln Industrial, STL, MO

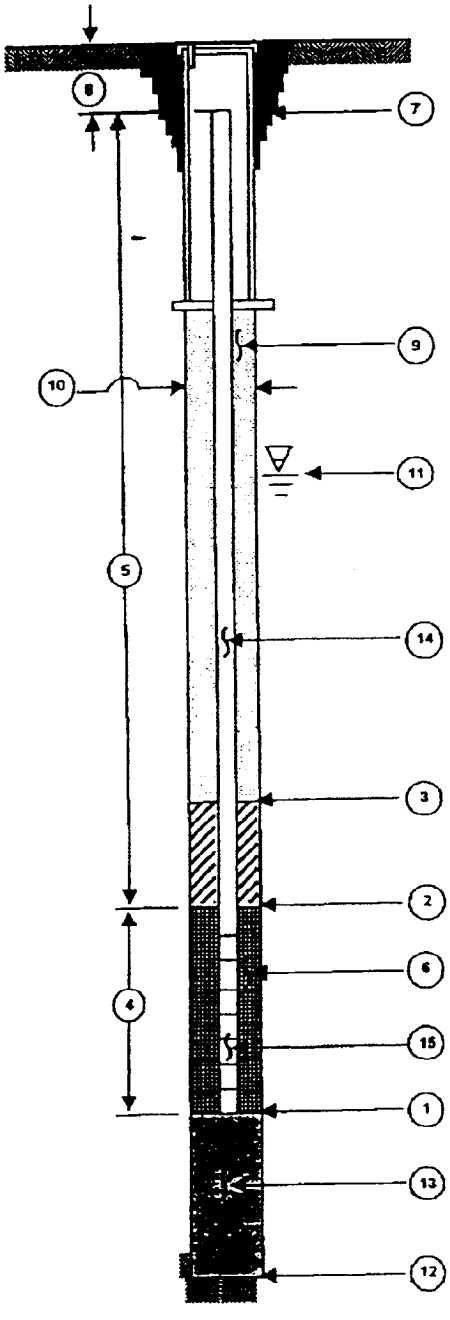

(1) DEPTH TO BOTTOM OF WELL POINT OR SLOTTED PIPE 33 FEET.*

(2) DEPTH TO BOTTOM OF SEAL (IF INSTALLED) 21 FEET.*

(3) DEPTH TO TOP OF SEAL (IF INSTALLED) 2 FEET.*

(4) LENGTH OF WELL SCREEN 10 FEET. SLOT SIZE 0.010 inch.

(5) TOTAL LENGTH OF RISER PIPE 22.72 FEET AT 2 INCH DIAMETER.

(6) TYPE OF PACK AROUND WELL POINT OR SLOTTED PIPE 20/40 Sieve Size Filter Sand

(7) CONCRETE CAP? (YES) NO (CIRCLE ONE)

(8) DEPTH TO TOP OF INNER CASING BELOW GROUND SURFACE 0.28 FEET.

(9) TYPE OF UPPER BACKFILL hydrated bentonite chips.

(10) BOREHOLD DIAMETER 8.75 INCHES.

(11) DEPTH TO GROUNDWATER 17.05 FEET BELOW TOP OF INNER CASING 24 HOURS AFTER WELL DEVELOPMENT.

(12) TOTAL DEPTH OF BOREHOLE 33 FEET.*

(13) TYPE OF LOWER BACKFILL N/A.

(14) PIPE MATERIAL schedule 40 PVC

(15) SCREEN MATERIAL schedule 40 PVC.

* (DEPTH FROM GROUND SURFACE)

MONITOR WELL INSTALLATION DETAILS

DAMES & MOORE
A DAMES & MOORE GROUP COMPANY

P:/BOILER/EXCEL/MONITORWELL.XLS

MONITORING WELL CONSTRUCTION DIAGRAM

GROUND SURFACE ELEVATION 488.83

TOP OF INNER WELL CASING ELEVATION 488.62

DATUM 500 feet (arbitarily picked at site)

JOB NUMBER 27994-022-045

BORING NUMBER MW-8

INSTALLATION DAT 2/4/00

LOCATION Lincoln Industrial, STL, MO.

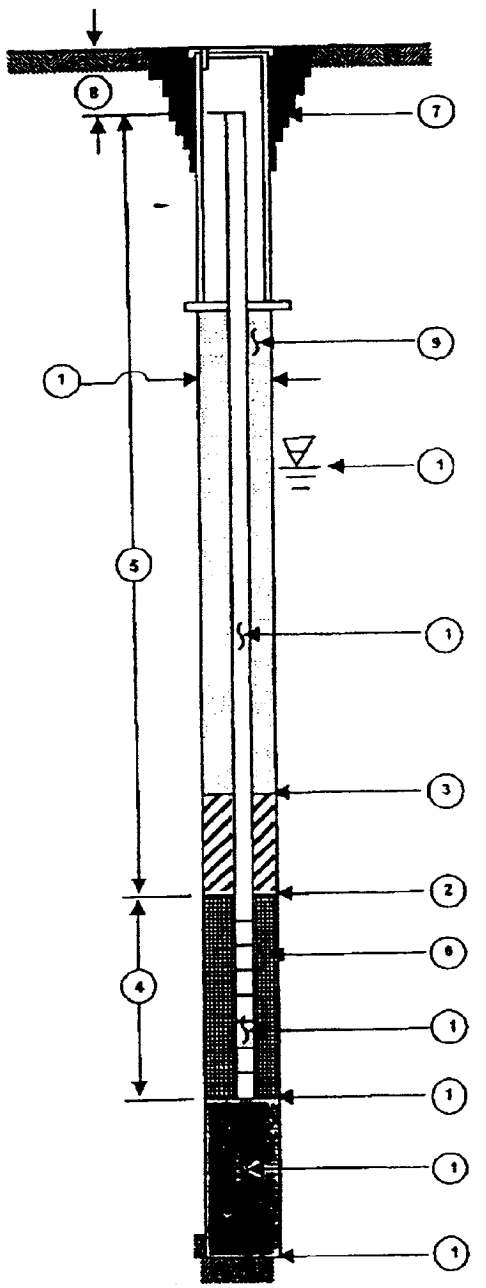

(1) DEPTH TO BOTTOM OF WELL POINT OR SLOTTED PIPE 35 FEET.*

(2) DEPTH TO BOTTOM OF SEAL (IF INSTALLED) 23 FEET.*

(3) DEPTH TO TOP OF SEAL (IF INSTALLED 2 FEET.*

(4) LENGTH OF WELL SCREEN 10 FEET. SLOT SIZE 0.010 inch.

(5) TOTAL LENGTH OF RISER PIPE 24.79 FEET AT 2 INCH DIAMETER.

(6) TYPE OF PACK AROUND WELL POINT OR SLOTTED PIPE 20/40 sieve size filter sand

(7) CONCRETE CAP (YES) NO (CIRCLE ONE)

(8) DEPTH TO TOP OF INNER CASING BELOW GROUND SURFACE 0.21 FEET.

(9) TYPE OF UPPER BACKFILL hydrated bentonite chips

(10) BOREHOLD DIAMETER 8.75 INCHES.

(11) DEPTH TO GROUNDWATER 15.73 FEET BELOW TOP OF INNER CASING 168 HOURS AFTER WELL DEVELOPMENT.

(1) TOTAL DEPTH OF BOREHOLE 35 FEET.*

(1) TYPE OF LOWER BACKFILL N/A

(14) PIPE MATERIAL Schedule 40 PVC

(1) SCREEN MATERIAL Schedule 40 PVC

* (DEPTH FROM GROUND SURFACE)

MONITOR WELL INSTALLATION DETAILS

DAMES & MOORE
A DAMES & MOORE GROUP COMPANY

P:/BOILER/EXCEL/MONITORWELLFLUSH

MONITORING WELL CONSTRUCTION DIAGRAM

GROUND SURFACE ELEVATION 482.88

TOP OF INNER WELL CASING ELEVATION 482.57

DATUM 500 feet (arbitarily picked at site)

JOB NUMBER 27994-022-045

BORING NUMBER MW-9

INSTALLATION DAT 2/7/00

LOCATION Lincoln Industrial, STL, MO.

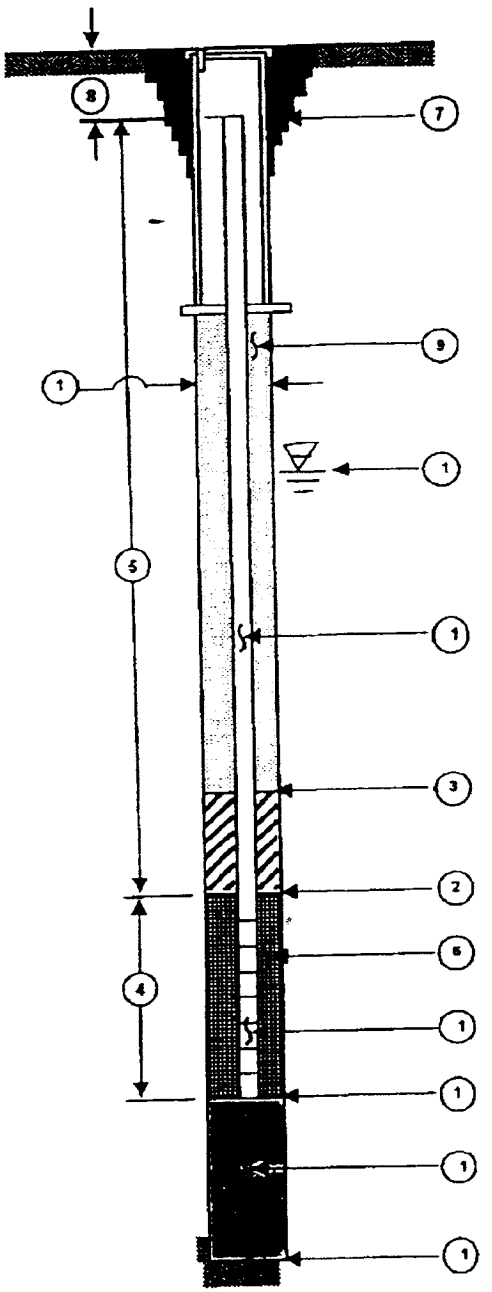

(1) DEPTH TO BOTTOM OF WELL POINT OR SLOTTED PIPE 23 FEET.*

(2) DEPTH TO BOTTOM OF SEAL (IF INSTALLED) 10 FEET.*

(3) DEPTH TO TOP OF SEAL (IF INSTALLED 2 FEET.*

(4) LENGTH OF WELL SCREEN 10 FEET. SLOT SIZE 0.010 inch

(5) TOTAL LENGTH OF RISER PIPE 12.69 FEET AT 2 INCH DIAMETER.

(6) TYPE OF PACK AROUND WELL POINT OR SLOTTED PIPE 20/40 sieve size filter sand.

(7) CONCRETE CAP (YES) NO (CIRCLE ONE)

(8) DEPTH TO TOP OF INNER CASING BELOW GROUND SURFACE 0.31 FEET.

(9) TYPE OF UPPER BACKFILL hydrated bentonite chips.

(10) BOREHOLD DIAMETER 8.75 INCHES.

(11) DEPTH TO GROUNDWATER N/A FEET BELOW TOP OF INNER CASING 96 HOURS AFTER WELL DEVELOPMENT. (Well was dry)

(1) TOTAL DEPTH OF BOREHOLE 32 FEET.*

(1) TYPE OF LOWER BACKFILL hydrated bentonite chips to 24' bgs. Filter sand from 23' to 24' bgs.

(14) PIPE MATERIAL Schedule 40 PVC.

(1) SCREEN MATERIAL Schedule 40 PVC

* (DEPTH FROM GROUND SURFACE)

MONITOR WELL INSTALLATION DETAILS

DAMES & MOORE
A DAMES & MOORE GROUP COMPANY

P:\BOILER\EXCEL\MONITORWELLFLUSH

MONITORING WELL CONSTRUCTION DIAGRAM

GROUND SURFACE ELEVATION 487.80

TOP OF INNER WELL CASING ELEVATION 487.71

DATUM 500 feet (arbitarily picked at site)

JOB NUMBER 27994-022-045

BORING NUMBER MW-10

INSTALLATION DAT 2/7/00

LOCATION Lincoln Industrial, STL, MO.

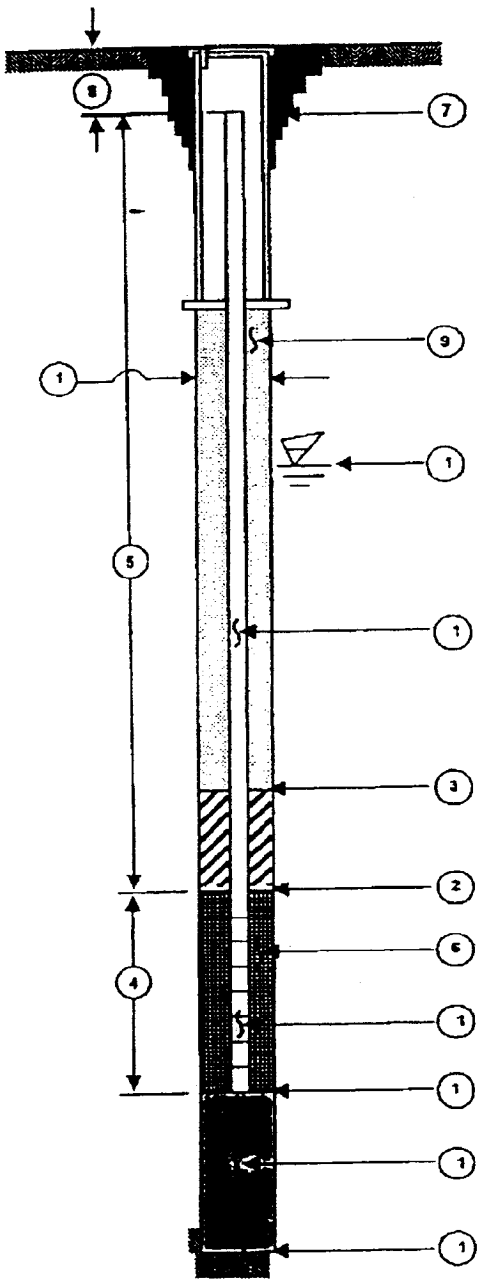

(1) DEPTH TO BOTTOM OF WELL POINT OR SLOTTED PIPE 33 FEET.*

(2) DEPTH TO BOTTOM OF SEAL (IF INSTALLED) 21 FEET.*

(3) DEPTH TO TOP OF SEAL (IF INSTALLED 2 FEET.*

(4) LENGTH OF WELL SCREEN 10 FEET. SLOT SIZE 0.010 inch

(5) TOTAL LENGTH OF RISER PIPE 22.91 FEET AT 2 INCH DIAMETER.

(6) TYPE OF PACK AROUND WELL POINT OR SLOTTED PIPE 20/40 sieve size filter sand.

(7) CONCRETE CAP (YES) NO (CIRCLE ONE)

(8) DEPTH TO TOP OF INNER CASING BELOW GROUND SURFACE 0.09 FEET.

(9) TYPE OF UPPER BACKFILL hydrated bentonite chips

(10) BOREHOLD DIAMETER 8.75 INCHES.

(11) DEPTH TO GROUNDWATER 19.86 FEET BELOW TOP OF INNER CASING 96 HOURS AFTER WELL DEVELOPMENT.

(1) TOTAL DEPTH OF BOREHOLE 33 FEET.*

(1) TYPE OF LOWER BACKFILL N/A

(14) PIPE MATERIAL Schedule 40 PVC

(1) SCREEN MATERIAL Schedule 40 PVC

* (DEPTH FROM GROUND SURFACE)

MONITOR WELL INSTALLATION DETAILS

DAMES & MOORE
A DAMES & MOORE GROUP COMPANY

P:/BOILER/EXCEL/MONITORWELLFLUSH

MONITORING WELL CONSTRUCTION DIAGRAM

GROUND SURFACE ELEVATION 485.89

TOP OF INNER WELL CASING ELEVATION 485.60

DATUM 500 feet (arbitarily picked at site)

JOB NUMBER 27994-022-045

BORING NUMBER MW-11

INSTALLATION DAT 2/8/00

LOCATION Lincoln Industrial, STL, MO.

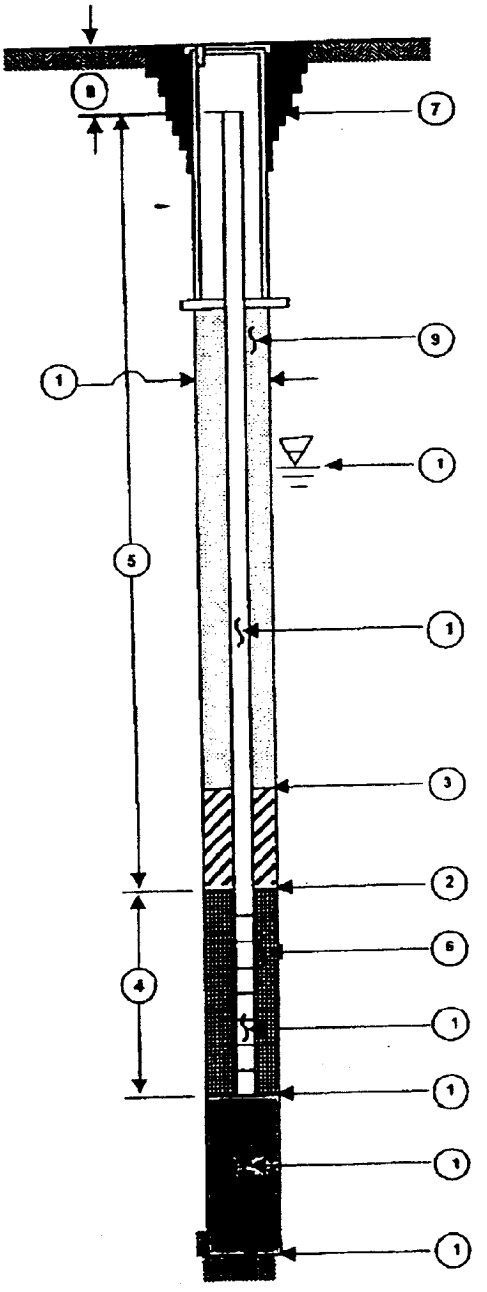

(1) DEPTH TO BOTTOM OF WELL POINT OR SLOTTED PIPE 36 FEET.*

(2) DEPTH TO BOTTOM OF SEAL (IF INSTALLED) 24 FEET.*

(3) DEPTH TO TOP OF SEAL (IF INSTALLED 2 FEET.*

(4) LENGTH OF WELL SCREEN 10 FEET. SLOT SIZE 0.010 inch

(5) TOTAL LENGTH OF RISER PIPE 25.71 FEET AT 2 INCH DIAMETER.

(6) TYPE OF PACK AROUND WELL POINT OR SLOTTED PIPE 20/40 sieve size filter sand.

(7) CONCRETE CAP (YES) NO (CIRCLE ONE)

(8) DEPTH TO TOP OF INNER CASING BELOW GROUND SURFACE 0.29 FEET.

(9) TYPE OF UPPER BACKFILL hydrated bentonite chips.

(10) BOREHOLD DIAMETER 8.75 INCHES.

(11) DEPTH TO GROUNDWATER 20.17 FEET BELOW TOP OF INNER CASING 72 HOURS AFTER WELL DEVELOPMENT.

(1) TOTAL DEPTH OF BOREHOLE 36 FEET.*

(1) TYPE OF LOWER BACKFILL N/A

(14) PIPE MATERIAL Schedule 40 PVC.

(1) SCREEN MATERIAL Schedule 40 PVC.

* (DEPTH FROM GROUND SURFACE)

MONITOR WELL INSTALLATION DETAILS

DAMES & MOORE
A DAMES & MOORE GROUP COMPANY

P:/BOILER/MXCEL/MONITORWELL/FLUSH

MONITORING WELL CONSTRUCTION DIAGRAM

GROUND SURFACE ELEVATION 492.81

TOP OF INNER WELL CASING ELEVATION 492.58

DATUM 500 feet (arbitarily picked at site)

JOB NUMBER 27994-022-045

BORING NUMBER MW-12

INSTALLATION DAT 2/8/00

LOCATION Lincoln Industrial, STL, MO.

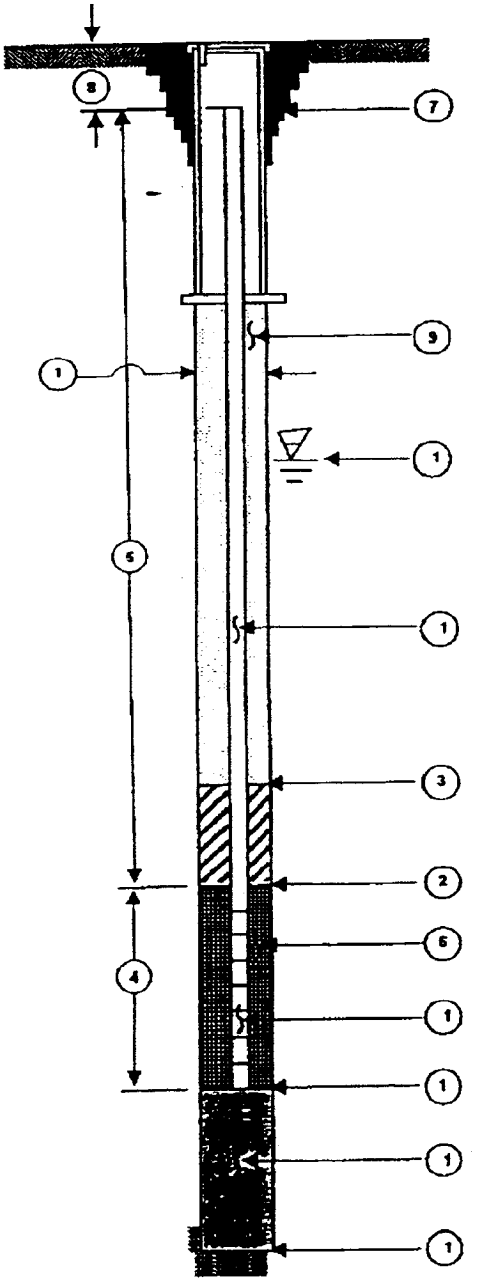

(1) DEPTH TO BOTTOM OF WELL POINT OR SLOTTED PIPE 41.5 FEET.*

(2) DEPTH TO BOTTOM OF SEAL (IF INSTALLED) 28 FEET.*

(3) DEPTH TO TOP OF SEAL (IF INSTALLED 2 FEET.*

(4) LENGTH OF WELL SCREEN 10 FEET. SLOT SIZE 0.010 inch.

(5) TOTAL LENGTH OF RISER PIPE 31.27 FEET AT 2 INCH DIAMETER.

(6) TYPE OF PACK AROUND WELL POINT OR SLOTTED PIPE 20/40 sieve size filter sand

(7) CONCRETE CAP (YES) NO (CIRCLE ONE)

(8) DEPTH TO TOP OF INNER CASING BELOW GROUND SURFACE 0.23 FEET.

(9) TYPE OF UPPER BACKFILL hydrated bentonite chips.

(10) BOREHOLD DIAMETER 8.75 INCHES

(11) DEPTH TO GROUNDWATER N/A FEET BELOW TOP OF INNER CASING 72 HOURS AFTER WELL DEVELOPMENT. (Well was dry)

(1) TOTAL DEPTH OF BOREHOLE 41.5 FEET.*

(1) TYPE OF LOWER BACKFILL N/A

(14) PIPE MATERIAL Schedule 40 PVC

(1) SCREEN MATERIAL Schedule 40 PVC

* (DEPTH FROM GROUND SURFACE)

MONITOR WELL INSTALLATION DETAILS

DAMES & MOORE
A DAMES & MOORE GROUP COMPANY

P:/BOILER/EXCEL/MONITORWELLFLUSH

APPENDIX C

LABORATORY ANALYTICAL DATA SHEETS

ATAS 875 Fee Fee Road • Maryland Heights, MO 63043 • (314) 434-4570 - FAX (314) 434-0080

CLIENT: DAMES & MOORE
721 EMERSON ROAD, SUITE 220
ST. LOUIS, MO 63141
ATTN: DAVID HEINZE

REPORT: 2836601VO(717)
DATE : 12-08-99

SAMPLE MATRIX : SOIL
ATAS # : 28366.02
DATE SUBMITTED: 11-29-99
DATE ANALYZED : 12-03-99

METHOD REF.: SW846-8260B, EPA METHODOLOGY
PROJECT : PENTAIR
SAMPLE ID : MW-1(5')

RESULTS REPORTED IN ug/Kg OR Parts Per Billion (PPB)

VOLATILES	R.L.	RESULTS	VOLATILES	R.L.	RESULTS
XYLENE (TOTAL)	5000	5900	TOLUENE	5000	ND
DICHLORODIFLUOROMETHANE	10000	ND	trans-1,3-DICHLOROPROPENE	5000	ND
CHLOROMETHANE	10000	ND	1,1,2-TRICHLOROETHANE	5000	ND
VINYL CHLORIDE	10000	ND	TETRACHLOROETHENE	5000	ND
BROMOMETHANE	10000	ND	1,3-DICHLOROPROPANE	5000	ND
CHLOROETHANE	10000	ND	2-HEXANONE	10000	ND
TRICHLOROFLUOROMETHANE	10000	ND	DIBROMOCHLOROMETHANE	5000	ND
1,1-DICHLOROETHENE	5000	ND	1,2-DIBROMOETHANE	5000	ND
ACETONE	10000	ND	CHLOROBENZENE	5000	ND
IODOMETHANE	10000	ND	1,1,1,2-TETRACHLOROETHANE	5000	ND
CARBON DISULFIDE	5000	ND	ETHYLBENZENE	5000	1900 J
METHYLENE CHLORIDE	5000	6400 B	STYRENE	5000	ND
trans-1,2-DICHLOROETHENE	5000	ND	BROMOFORM	5000	ND
M 'L TERT-BUTYL ETHER	10000	ND	ISOPROPYLBENZENE	5000	3700 J
1,. JICHLOROETHANE	5000	ND	1,1,2,2-TETRACHLOROETHANE	5000	ND
VINYL ACETATE	10000	ND	BROMOBENZENE	5000	ND
2,2-DICHLOROPROPANE	5000	ND	1,2,3-TRICHLOROPROPANE	5000	ND
cis-1,2-DICHLOROETHENE	5000	ND	n-PROPYLBENZENE	5000	9600
2-BUTANONE	10000	ND	2-CHLOROTOLUENE	5000	ND
BROMOCHLOROMETHANE	5000	ND	1,3,5-TRIMETHYLBENZENE	5000	ND
CHLOROFORM	5000	ND	4-CHLOROTOLUENE	5000	ND
1,1,1-TRICHLOROETHANE	5000	ND	TERT-BUTYLBENZENE	5000	ND
CARBON TETRACHLORIDE	5000	ND	1,2,4-TRIMETHYLBENZENE	5000	46000
1,1-DICHLOROPROPENE	5000	ND	sec-BUTYLBENZENE	5000	7600
BENZENE	5000	ND	1,3-DICHLOROBENZENE	5000	ND
1,2-DICHLOROETHANE	5000	ND	p-ISOPROPYLTOLUENE	5000	8300
TRICHLOROETHENE	5000	ND	1,4-DICHLOROBENZENE	5000	ND
1,2-DICHLOROPROPANE	5000	ND	n-BUTYLBENZENE	5000	9300
DIBROMOMETHANE	5000	ND	1,2-DICHLOROBENZENE	5000	ND
BROMODICHLOROMETHANE	5000	ND	1,2-DIBROMO-3-CHLOROPROPANE	5000	ND
cis-1,3-DICHLOROPROPENE	5000	ND	1,2,4-TRICHLOROBENZENE	5000	ND
4-METHYL-2-PENTANONE	10000	ND	HEXACHLOROBUTADIENE	5000	ND
1,2,3-TRICHLOROBENZENE	5000	ND	NAPHTHALENE	5000	ND

QA/QC SURROGATE RECOVERIES

TOLUENE-d8 (81-117) 104% BROMOFLUOROBENZENE (74-121) 96%
1,2-DICHLOROETHANE-D4 (70-121) 85%

B = ANALYTE DETECTED IN METHOD BLANK, POSSIBLY BELOW THE REPORTING LIMIT.
J = ESTIMATED VALUE; BELOW REPORTING LIMIT
ND = NOT DETECTED ABOVE REPORTING LIMIT
RL = REPORTING LIMIT; DEFINED AS THE PRACTICAL QUANTITATION LIMIT PLUS ANY DILUTION

ATAS 875 Fee Fee Road • Maryland Heights, MO 63043 • (314) 434-4570 - FAX (314) 434-0080

CLIENT: DAMES & MOORE
721 EMERSON ROAD, SUITE 220
ST. LOUIS, MO 63141
ATTN: DAVID HEINZE

REPORT: 2835601VO(717)

DATE : 12-08-99

SAMPLE MATRIX : SOIL
ATAS # : 28356.03
DATE SUBMITTED: 11-24-99
DATE ANALYZED : 11-30-99

METHOD REF.: SW846-8260B, EPA METHODOLOGY
PROJECT : PENTAIR
SAMPLE ID : MW-2(17')

RESULTS REPORTED IN ug/Kg OR Parts Per Billion (PPB)

VOLATILES	R.L.	RESULTS	VOLATILES	R.L.	RESULTS
XYLENE (TOTAL)	5	ND	TOLUENE	5	ND
DICHLORODIFLUOROMETHANE	10	ND	trans-1,3-DICHLOROPROPENE	5	ND
CHLOROMETHANE	10	ND	1,1,2-TRICHLOROETHANE	5	ND
VINYL CHLORIDE	10	ND	TETRACHLOROETHENE	5	ND
BROMOMETHANE	10	ND	1,3-DICHLOROPROPANE	5	ND
CHLOROETHANE	10	ND	2-HEXANONE	10	ND
TRICHLOROFLUOROMETHANE	10	ND	DIBROMOCHLOROMETHANE	5	ND
1,1-DICHLOROETHENE	5	ND	1,2-DIBROMOETHANE	5	ND
ACETONE	10	ND	CHLOROBENZENE	5	ND
IODOMETHANE	10	ND	1,1,1,2-TETRACHLOROETHANE	5	ND
CARBON DISULFIDE	5	ND	ETHYLBENZENE	5	ND
METHYLENE CHLORIDE	5	6 B	STYRENE	5	ND
trans-1,2-DICHLOROETHENE	5	ND	BROMOFORM	5	ND
[illegible]YL TERT-BUTYL ETHER	10	ND	ISOPROPYLBENZENE	5	ND
1,[illegible]-DICHLOROETHANE	5	ND	1,1,2,2-TETRACHLOROETHANE	5	ND
VINYL ACETATE	10	ND	BROMOBENZENE	5	ND
2,2-DICHLOROPROPANE	5	ND	1,2,3-TRICHLOROPROPANE	5	ND
cis-1,2-DICHLOROETHENE	5	ND	n-PROPYLBENZENE	5	ND
2-BUTANONE	10	ND	2-CHLOROTOLUENE	5	ND
BROMOCHLOROMETHANE	5	ND	1,3,5-TRIMETHYLBENZENE	5	ND
CHLOROFORM	5	ND	4-CHLOROTOLUENE	5	ND
1,1,1-TRICHLOROETHANE	5	ND	TERT-BUTYLBENZENE	5	ND
CARBON TETRACHLORIDE	5	ND	1,2,4-TRIMETHYLBENZENE	5	ND
1,1-DICHLOROPROPENE	5	ND	sec-BUTYLBENZENE	5	ND
BENZENE	5	ND	1,3-DICHLOROBENZENE	5	ND
1,2-DICHLOROETHANE	5	ND	p-ISOPROPYLTOLUENE	5	ND
TRICHLOROETHENE	5	ND	1,4-DICHLOROBENZENE	5	ND
1,2-DICHLOROPROPANE	5	ND	n-BUTYLBENZENE	5	ND
DIBROMOMETHANE	5	ND	1,2-DICHLOROBENZENE	5	ND
BROMODICHLOROMETHANE	5	ND	1,2-DIBROMO-3-CHLOROPROPANE	5	ND
cis-1,3-DICHLOROPROPENE	5	ND	1,2,4-TRICHLOROBENZENE	5	ND
4-METHYL-2-PENTANONE	10	ND	HEXACHLOROBUTADIENE	5	ND
1,2,3-TRICHLOROBENZENE	5	ND	NAPHTHALENE	5	ND

QA/QC SURROGATE RECOVERIES

TOLUENE-d8(81-117) 100% BROMOFLUOROBENZENE(74-121) 102%
1,2-DICHLOROETHANE-D4(70-121) 88%

B = ANALYTE DETECTED IN METHOD BLANK, POSSIBLY BELOW THE REPORTING LIMIT.
ND = NOT DETECTED ABOVE REPORTING LIMIT
RL = REPORTING LIMIT; DEFINED AS THE PRACTICAL QUANTITATION LIMIT PLUS ANY DILUTION. POSITIVE VALUES BELOW THIS LIMIT WERE NOT REPORTED.

ATAS 875 Fee Fee Road • Maryland Heights, MO 63043 • (314) 434-4570 - FAX (314) 434-0080

CLIENT: DAMES & MOORE
721 EMERSON ROAD, SUITE 220
ST. LOUIS, MO 63141
ATTN: DAVID HEINZE

REPORT: 2835601VO(717)

DATE : 12-08-99

SAMPLE MATRIX : SOIL
ATAS # : 28356.01
DATE SUBMITTED: 11-24-99
DATE ANALYZED : 11-30-99

METHOD REF.: SW846-8260B, EPA METHODOLOGY
PROJECT : PENTAIR
SAMPLE ID : MW-3(8')

RESULTS REPORTED IN ug/Kg OR Parts Per Billion (PPB)

VOLATILES	R.L.	RESULTS	VOLATILES	R.L.	RESULTS
XYLENE (TOTAL)	5	ND	TOLUENE	5	ND
DICHLORODIFLUOROMETHANE	10	ND	trans-1,3-DICHLOROPROPENE	5	ND
CHLOROMETHANE	10	ND	1,1,2-TRICHLOROETHANE	5	ND
VINYL CHLORIDE	10	ND	TETRACHLOROETHENE	5	ND
BROMOMETHANE	10	ND	1,3-DICHLOROPROPANE	5	ND
CHLOROETHANE	10	ND	2-HEXANONE	10	ND
TRICHLOROFLUOROMETHANE	10	ND	DIBROMOCHLOROMETHANE	5	ND
1,1-DICHLOROETHENE	5	ND	1,2-DIBROMOETHANE	5	ND
ACETONE	10	ND	CHLOROBENZENE	5	ND
IODOMETHANE	10	ND	1,1,1,2-TETRACHLOROETHANE	5	ND
CARBON DISULFIDE	5	ND	ETHYLBENZENE	5	ND
METHYLENE CHLORIDE	5	6 B	STYRENE	5	ND
trans-1,2-DICHLOROETHENE	5	ND	BROMOFORM	5	ND
[illegible]YL TERT-BUTYL ETHER	10	ND	ISOPROPYLBENZENE	5	ND
1,1-DICHLOROETHANE	5	ND	1,1,2,2-TETRACHLOROETHANE	5	ND
VINYL ACETATE	10	ND	BROMOBENZENE	5	ND
2,2-DICHLOROPROPANE	5	ND	1,2,3-TRICHLOROPROPANE	5	ND
cis-1,2-DICHLOROETHENE	5	ND	n-PROPYLBENZENE	5	ND
2-BUTANONE	10	ND	2-CHLOROTOLUENE	5	ND
BROMOCHLOROMETHANE	5	ND	1,3,5-TRIMETHYLBENZENE	5	ND
CHLOROFORM	5	ND	4-CHLOROTOLUENE	5	ND
1,1,1-TRICHLOROETHANE	5	ND	TERT-BUTYLBENZENE	5	ND
CARBON TETRACHLORIDE	5	ND	1,2,4-TRIMETHYLBENZENE	5	ND
1,1-DICHLOROPROPENE	5	ND	sec-BUTYLBENZENE	5	ND
BENZENE	5	ND	1,3-DICHLOROBENZENE	5	ND
1,2-DICHLOROETHANE	5	ND	p-ISOPROPYLTOLUENE	5	ND
TRICHLOROETHENE	5	ND	1,4-DICHLOROBENZENE	5	ND
1,2-DICHLOROPROPANE	5	ND	n-BUTYLBENZENE	5	ND
DIBROMOMETHANE	5	ND	1,2-DICHLOROBENZENE	5	ND
BROMODICHLOROMETHANE	5	ND	1,2-DIBROMO-3-CHLOROPROPANE	5	ND
cis-1,3-DICHLOROPROPENE	5	ND	1,2,4-TRICHLOROBENZENE	5	ND
4-METHYL-2-PENTANONE	10	ND	HEXACHLOROBUTADIENE	5	ND
1,2,3-TRICHLOROBENZENE	5	ND	NAPHTHALENE	5	ND

QA/QC SURROGATE RECOVERIES

TOLUENE-d8(81-117) 100% BROMOFLUOROBENZENE(74-121) 92%
1,2-DICHLOROETHANE-D4(70-121) 88%

B = ANALYTE DETECTED IN METHOD BLANK, POSSIBLY BELOW THE REPORTING LIMIT.
ND = NOT DETECTED ABOVE REPORTING LIMIT
RL = REPORTING LIMIT; DEFINED AS THE PRACTICAL QUANTITATION LIMIT PLUS ANY DILUTION, POSITIVE VALUES BELOW THIS LIMIT WERE NOT REPORTED.

ATAS 875 Fee Fee Road • Maryland Heights, MO 63043 • (314) 434-4570 - FAX (314) 434-0080

CLIENT: DAMES & MOORE
721 EMERSON ROAD, SUITE 220
ST. LOUIS, MO 63141
ATTN: DAVID HEINZE

REPORT: 2835601VO(717)

DATE : 12-08-99

SAMPLE MATRIX : SOIL
ATAS # : 28356.02
DATE SUBMITTED: 11-24-99
DATE ANALYZED : 11-30-99

METHOD REF.: SW846-8260B, EPA METHODOLOGY
PROJECT : PENTAIR
SAMPLE ID : MW-4(6')

RESULTS REPORTED IN ug/Kg OR Parts Per Billion (PPB)

VOLATILES	R.L.	RESULTS	VOLATILES	R.L.	RESULTS
XYLENE (TOTAL)	5	ND	TOLUENE	5	ND
DICHLORODIFLUOROMETHANE	10	ND	trans-1,3-DICHLOROPROPENE	5	ND
CHLOROMETHANE	10	ND	1,1,2-TRICHLOROETHANE	5	ND
VINYL CHLORIDE	10	ND	TETRACHLOROETHENE	5	ND
BROMOMETHANE	10	ND	1,3-DICHLOROPROPANE	5	ND
CHLOROETHANE	10	ND	2-HEXANONE	10	ND
TRICHLOROFLUOROMETHANE	10	ND	DIBROMOCHLOROMETHANE	5	ND
1,1-DICHLOROETHENE	5	ND	1,2-DIBROMOETHANE	5	ND
ACETONE	10	ND	CHLOROBENZENE	5	ND
IODOMETHANE	10	ND	1,1,1,2-TETRACHLOROETHANE	5	ND
CARBON DISULFIDE	5	ND	ETHYLBENZENE	5	ND
METHYLENE CHLORIDE	5	7 B	STYRENE	5	ND
t ns-1,2-DICHLOROETHENE	5	ND	BROMOFORM	5	ND
. IYL TERT-BUTYL ETHER	10	ND	ISOPROPYLBENZENE	5	ND
1,1-DICHLOROETHANE	5	ND	1,1,2,2-TETRACHLOROETHANE	5	ND
VINYL ACETATE	10	ND	BROMOBENZENE	5	ND
2,2-DICHLOROPROPANE	5	ND	1,2,3-TRICHLOROPROPANE	5	ND
cis-1,2-DICHLOROETHENE	5	ND	n-PROPYLBENZENE	5	ND
2-BUTANONE	10	ND	2-CHLOROTOLUENE	5	ND
BROMOCHLOROMETHANE	5	ND	1,3,5-TRIMETHYLBENZENE	5	ND
CHLOROFORM	5	ND	4-CHLOROTOLUENE	5	ND
1,1,1-TRICHLOROETHANE	5	ND	TERT-BUTYLBENZENE	5	ND
CARBON TETRACHLORIDE	5	ND	1,2,4-TRIMETHYLBENZENE	5	ND
1,1-DICHLOROPROPENE	5	ND	sec-BUTYLBENZENE	5	ND
BENZENE	5	ND	1,3-DICHLOROBENZENE	5	ND
1,2-DICHLOROETHANE	5	ND	p-ISOPROPYLTOLUENE	5	ND
TRICHLOROETHENE	5	ND	1,4-DICHLOROBENZENE	5	ND
1,2-DICHLOROPROPANE	5	ND	n-BUTYLBENZENE	5	ND
DIBROMOMETHANE	5	ND	1,2-DICHLOROBENZENE	5	ND
BROMODICHLOROMETHANE	5	ND	1,2-DIBROMO-3-CHLOROPROPANE	5	ND
cis-1,3-DICHLOROPROPENE	5	ND	1,2,4-TRICHLOROBENZENE	5	ND
4-METHYL-2-PENTANONE	10	ND	HEXACHLOROBUTADIENE	5	ND
1,2,3-TRICHLOROBENZENE	5	ND	NAPHTHALENE	5	ND

QA/QC SURROGATE RECOVERIES

TOLUENE-d8(81-117) 100% BROMOFLUOROBENZENE(74-121) 98%
1,2-DICHLOROETHANE-D4(70-121) 88%

B = ANALYTE DETECTED IN METHOD BLANK, POSSIBLY BELOW THE REPORTING LIMIT.
ND = NOT DETECTED ABOVE REPORTING LIMIT
RL = REPORTING LIMIT; DEFINED AS THE PRACTICAL QUANTITATION LIMIT PLUS ANY DILUTION, POSITIVE VALUES BELOW THIS LIMIT WERE NOT REPORTED.

ATAS 875 Fee Fee Road • Maryland Heights, MO 63043 • (314) 434-4570 - FAX (314) 434-0080

CLIENT: DAMES & MOORE
721 EMERSON ROAD, SUITE 220
ST. LOUIS, MO 63141
ATTN: DAVID HEINZE

REPORT: 2834701VO(717)
DATE : 12-09-99

SAMPLE MATRIX : SOIL
ATAS # : 28347.01
DATE SUBMITTED: 11-23-99
DATE ANALYZED : 11-29-99

METHOD REF.: SW846-8260B, EPA METHODOLOGY
PROJECT : PENTAIR
SAMPLE ID : MW-5(18')

RESULTS REPORTED IN ug/Kg OR Parts Per Billion (PPB)

VOLATILES	R.L.	RESULTS	VOLATILES	R.L.	RESULTS
XYLENE (TOTAL)	5	ND	TOLUENE	5	ND
DICHLORODIFLUOROMETHANE	10	ND	trans-1,3-DICHLOROPROPENE	5	ND
CHLOROMETHANE	10	ND	1,1,2-TRICHLOROETHANE	5	ND
VINYL CHLORIDE	10	ND	TETRACHLOROETHENE	5	ND
BROMOMETHANE	10	ND	1,3-DICHLOROPROPANE	5	ND
CHLOROETHANE	10	ND	2-HEXANONE	10	ND
TRICHLOROFLUOROMETHANE	10	ND	DIBROMOCHLOROMETHANE	5	ND
1,1-DICHLOROETHENE	5	ND	1,2-DIBROMOETHANE	5	ND
ACETONE	10	ND	CHLOROBENZENE	5	ND
IODOMETHANE	10	ND	1,1,1,2-TETRACHLOROETHANE	5	ND
CARBON DISULFIDE	5	ND	ETHYLBENZENE	5	ND
METHYLENE CHLORIDE	5	11 B	STYRENE	5	ND
trans-1,2-DICHLOROETHENE	5	ND	BROMOFORM	5	ND
[illegible]TYL TERT-BUTYL ETHER	10	ND	ISOPROPYLBENZENE	5	ND
1,[illegible]-DICHLOROETHANE	5	ND	1,1,2,2-TETRACHLOROETHANE	5	ND
VINYL ACETATE	10	ND	BROMOBENZENE	5	ND
2,2-DICHLOROPROPANE	5	ND	1,2,3-TRICHLOROPROPANE	5	ND
cis-1,2-DICHLOROETHENE	5	ND	n-PROPYLBENZENE	5	ND
2-BUTANONE	10	ND	2-CHLOROTOLUENE	5	ND
BROMOCHLOROMETHANE	5	ND	1,3,5-TRIMETHYLBENZENE	5	ND
CHLOROFORM	5	ND	4-CHLOROTOLUENE	5	ND
1,1,1-TRICHLOROETHANE	5	ND	TERT-BUTYLBENZENE	5	ND
CARBON TETRACHLORIDE	5	ND	1,2,4-TRIMETHYLBENZENE	5	ND
1,1-DICHLOROPROPENE	5	ND	sec-BUTYLBENZENE	5	ND
BENZENE	5	ND	1,3-DICHLOROBENZENE	5	ND
1,2-DICHLOROETHANE	5	ND	p-ISOPROPYLTOLUENE	5	ND
TRICHLOROETHENE	5	ND	1,4-DICHLOROBENZENE	5	ND
1,2-DICHLOROPROPANE	5	ND	n-BUTYLBENZENE	5	ND
DIBROMOMETHANE	5	ND	1,2-DICHLOROBENZENE	5	ND
BROMODICHLOROMETHANE	5	ND	1,2-DIBROMO-3-CHLOROPROPANE	5	ND
cis-1,3-DICHLOROPROPENE	5	ND	1,2,4-TRICHLOROBENZENE	5	ND
4-METHYL-2-PENTANONE	10	ND	HEXACHLOROBUTADIENE	5	ND
1,2,3-TRICHLOROBENZENE	5	ND	NAPHTHALENE	5	ND

QA/QC SURROGATE RECOVERIES

TOLUENE-d8(81-117) 97% BROMOFLUOROBENZENE(74-121) 101%
1,2-DICHLOROETHANE-D4(70-121) 99%

B = ANALYTE DETECTED IN METHOD BLANK, POSSIBLY BELOW THE REPORTING LIMIT.
ND = NOT DETECTED ABOVE REPORTING LIMIT
RL = REPORTING LIMIT; DEFINED AS THE PRACTICAL QUANTITATION LIMIT PLUS ANY DILUTION, POSITIVE VALUES BELOW THIS LIMIT WERE NOT REPORTED.

ATAS 875 Fee Fee Road • Maryland Heights, MO 63043 • (314) 434-4570 - FAX (314) 434-0080

CLIENT: DAMES & MOORE
721 EMERSON ROAD, SUITE 220
ST. LOUIS, MO 63141
ATTN: DAVID HEINZE

REPORT: 2834701VO(717)

DATE : 12-09-99

SAMPLE MATRIX : SOIL
ATAS # : 28347.02
DATE SUBMITTED: 11-23-99
DATE ANALYZED : 11-29-99

METHOD REF.: SW846-8260B, EPA METHODOLOGY
PROJECT : PENTAIR
SAMPLE ID : MW-6(25')

RESULTS REPORTED IN ug/Kg OR Parts Per Billion (PPB)

VOLATILES	R.L.	RESULTS
XYLENE (TOTAL)	5	ND
DICHLORODIFLUOROMETHANE	10	ND
CHLOROMETHANE	10	ND
VINYL CHLORIDE	10	ND
BROMOMETHANE	10	ND
CHLOROETHANE	10	ND
TRICHLOROFLUOROMETHANE	10	ND
1,1-DICHLOROETHENE	5	ND
ACETONE	10	ND
IODOMETHANE	10	ND
CARBON DISULFIDE	5	ND
METHYLENE CHLORIDE	5	9 B
trans-1,2-DICHLOROETHENE	5	ND
[illegible]YL TERT-BUTYL ETHER	10	ND
1,1-DICHLOROETHANE	5	ND
VINYL ACETATE	10	ND
2,2-DICHLOROPROPANE	5	ND
cis-1,2-DICHLOROETHENE	5	ND
2-BUTANONE	10	ND
BROMOCHLOROMETHANE	5	ND
CHLOROFORM	5	ND
1,1,1-TRICHLOROETHANE	5	ND
CARBON TETRACHLORIDE	5	ND
1,1-DICHLOROPROPENE	5	ND
BENZENE	5	ND
1,2-DICHLOROETHANE	5	ND
TRICHLOROETHENE	5	ND
1,2-DICHLOROPROPANE	5	ND
DIBROMOMETHANE	5	ND
BROMODICHLOROMETHANE	5	ND
cis-1,3-DICHLOROPROPENE	5	ND
4-METHYL-2-PENTANONE	10	ND
1,2,3-TRICHLOROBENZENE	5	ND

VOLATILES	R.L.	RESULTS
TOLUENE	5	ND
trans-1,3-DICHLOROPROPENE	5	ND
1,1,2-TRICHLOROETHANE	5	ND
TETRACHLOROETHENE	5	ND
1,3-DICHLOROPROPANE	5	ND
2-HEXANONE	10	ND
DIBROMOCHLOROMETHANE	5	ND
1,2-DIBROMOETHANE	5	ND
CHLOROBENZENE	5	ND
1,1,1,2-TETRACHLOROETHANE	5	ND
ETHYLBENZENE	5	ND
STYRENE	5	ND
BROMOFORM	5	ND
ISOPROPYLBENZENE	5	ND
1,1,2,2-TETRACHLOROETHANE	5	ND
BROMOBENZENE	5	ND
1,2,3-TRICHLOROPROPANE	5	ND
n-PROPYLBENZENE	5	ND
2-CHLOROTOLUENE	5	ND
1,3,5-TRIMETHYLBENZENE	5	ND
4-CHLOROTOLUENE	5	ND
TERT-BUTYLBENZENE	5	ND
1,2,4-TRIMETHYLBENZENE	5	ND
sec-BUTYLBENZENE	5	ND
1,3-DICHLOROBENZENE	5	ND
p-ISOPROPYLTOLUENE	5	ND
1,4-DICHLOROBENZENE	5	ND
n-BUTYLBENZENE	5	ND
1,2-DICHLOROBENZENE	5	ND
1,2-DIBROMO-3-CHLOROPROPANE	5	ND
1,2,4-TRICHLOROBENZENE	5	ND
HEXACHLOROBUTADIENE	5	ND
NAPHTHALENE	5	ND

QA/QC SURROGATE RECOVERIES

TOLUENE-d8(81-117) 98% BROMOFLUOROBENZENE(74-121) 98%
1,2-DICHLOROETHANE-D4(70-121) 103%

B = ANALYTE DETECTED IN METHOD BLANK, POSSIBLY BELOW THE REPORTING LIMIT.
ND = NOT DETECTED ABOVE REPORTING LIMIT
RL = REPORTING LIMIT; DEFINED AS THE PRACTICAL QUANTITATION LIMIT PLUS ANY DILUTION, POSITIVE VALUES BELOW THIS LIMIT WERE NOT REPORTED.

ATAS 875 Fee Fee Road • Maryland Heights, MO 63043 • (314) 434-4570 - FAX (314) 434-0080

CLIENT: DAMES & MOORE
721 EMERSON ROAD, SUITE 220
ST. LOUIS, MO 63141
ATTN: DAVID HEINZE

REPORT: 2836601VO(717)

DATE : 12-08-99

SAMPLE MATRIX : SOIL
ATAS # : 28366.01
DATE SUBMITTED: 11-29-99
DATE ANALYZED : 12-01-99

METHOD REF.: SW846-8260B, EPA METHODOLOGY
PROJECT : PENTAIR
SAMPLE ID : MW-7(5')

RESULTS REPORTED IN ug/Kg OR Parts Per Billion (PPB)

VOLATILES	R.L.	RESULTS	VOLATILES	R.L.	RESULTS
XYLENE (TOTAL)	5	ND	TOLUENE	5	ND
DICHLORODIFLUOROMETHANE	10	ND	trans-1,3-DICHLOROPROPENE	5	ND
CHLOROMETHANE	10	ND	1,1,2-TRICHLOROETHANE	5	ND
VINYL CHLORIDE	10	ND	TETRACHLOROETHENE	5	ND
BROMOMETHANE	10	ND	1,3-DICHLOROPROPANE	5	ND
CHLOROETHANE	10	ND	2-HEXANONE	10	ND
TRICHLOROFLUOROMETHANE	10	ND	DIBROMOCHLOROMETHANE	5	ND
1,1-DICHLOROETHENE	5	ND	1,2-DIBROMOETHANE	5	ND
ACETONE	10	ND	CHLOROBENZENE	5	ND
IODOMETHANE	10	ND	1,1,1,2-TETRACHLOROETHANE	5	ND
CARBON DISULFIDE	5	ND	ETHYLBENZENE	5	ND
METHYLENE CHLORIDE	5	6 B	STYRENE	5	ND
trans-1,2-DICHLOROETHENE	5	ND	BROMOFORM	5	ND
M YL TERT-BUTYL ETHER	10	ND	ISOPROPYLBENZENE	5	ND
1. DICHLOROETHANE	5	ND	1,1,2,2-TETRACHLOROETHANE	5	ND
VINYL ACETATE	10	ND	BROMOBENZENE	5	ND
2,2-DICHLOROPROPANE	5	ND	1,2,3-TRICHLOROPROPANE	5	ND
cis-1,2-DICHLOROETHENE	5	ND	n-PROPYLBENZENE	5	ND
2-BUTANONE	10	ND	2-CHLOROTOLUENE	5	ND
BROMOCHLOROMETHANE	5	ND	1,3,5-TRIMETHYLBENZENE	5	ND
CHLOROFORM	5	ND	4-CHLOROTOLUENE	5	ND
1,1,1-TRICHLOROETHANE	5	ND	TERT-BUTYLBENZENE	5	ND
CARBON TETRACHLORIDE	5	ND	1,2,4-TRIMETHYLBENZENE	5	ND
1,1-DICHLOROPROPENE	5	ND	sec-BUTYLBENZENE	5	ND
BENZENE	5	ND	1,3-DICHLOROBENZENE	5	ND
1,2-DICHLOROETHANE	5	ND	p-ISOPROPYLTOLUENE	5	ND
TRICHLOROETHENE	5	ND	1,4-DICHLOROBENZENE	5	ND
1,2-DICHLOROPROPANE	5	ND	n-BUTYLBENZENE	5	ND
DIBROMOMETHANE	5	ND	1,2-DICHLOROBENZENE	5	ND
BROMODICHLOROMETHANE	5	ND	1,2-DIBROMO-3-CHLOROPROPANE	5	ND
cis-1,3-DICHLOROPROPENE	5	ND	1,2,4-TRICHLOROBENZENE	5	ND
4-METHYL-2-PENTANONE	10	ND	HEXACHLOROBUTADIENE	5	ND
1,2,3-TRICHLOROBENZENE	5	ND	NAPHTHALENE	5	ND

QA/QC SURROGATE RECOVERIES

TOLUENE-d8(81-117) 102% BROMOFLUOROBENZENE(74-121) 96%
1,2-DICHLOROETHANE-D4(70-121) 84%

B = ANALYTE DETECTED IN METHOD BLANK, POSSIBLY BELOW THE REPORTING LIMIT.
ND = NOT DETECTED ABOVE REPORTING LIMIT
RL = REPORTING LIMIT; DEFINED AS THE PRACTICAL QUANTITATION LIMIT PLUS ANY DILUTION. POSITIVE VALUES BELOW THIS LIMIT WERE NOT REPORTED.

ATAS 875 Fee Fee Road • Maryland Heights, MO 63043 • (314) 434-4570 - FAX (314) 434-0080

CLIENT: DAMES & MOORE
721 EMERSON ROAD, SUITE 220
ST. LOUIS, MO 63141
ATTN: GEORGE JONES

REPORT: 2891201VO(720)
DATE : 02-14-00

SAMPLE MATRIX : SOIL
ATAS # : 28912.01
DATE SUBMITTED: 02-09-00
DATE ANALYZED : 02-09-00

METHOD REF.: SW846-8260B, EPA METHODOLOGY
PROJECT # : 27994-022-045 - PENTAIR
SAMPLE ID : MW-12-10'

RESULTS REPORTED IN ug/Kg OR Parts Per Billion (PPB)

VOLATILES	R.L.	RESULTS	VOLATILES	R.L.	RESULTS
XYLENE (TOTAL)	5	ND	TOLUENE	5	ND
DICHLORODIFLUOROMETHANE	10	ND	trans-1,3-DICHLOROPROPENE	5	ND
CHLOROMETHANE	10	ND	1,1,2-TRICHLOROETHANE	5	ND
VINYL CHLORIDE	10	ND	TETRACHLOROETHENE	5	ND
BROMOMETHANE	10	ND	1,3-DICHLOROPROPANE	5	ND
CHLOROETHANE	10	ND	2-HEXANONE	10	ND
TRICHLOROFLUOROMETHANE	10	ND	DIBROMOCHLOROMETHANE	5	ND
1,1-DICHLOROETHENE	5	ND	1,2-DIBROMOETHANE	5	ND
ACETONE	10	ND	CHLOROBENZENE	5	ND
IODOMETHANE	10	ND	1,1,1,2-TETRACHLOROETHANE	5	ND
CARBON DISULFIDE	5	ND	ETHYLBENZENE	5	ND
METHYLENE CHLORIDE	5	12 B	STYRENE	5	ND
trans-1,2-DICHLOROETHENE	5	ND	BROMOFORM	5	ND
N YL TERT-BUTYL ETHER	10	ND	ISOPROPYLBENZENE	5	ND
1, DICHLOROETHANE	5	ND	1,1,2,2-TETRACHLOROETHANE	5	ND
VINYL ACETATE	10	ND	BROMOBENZENE	5	ND
2,2-DICHLOROPROPANE	5	ND	1,2,3-TRICHLOROPROPANE	5	ND
cis-1,2-DICHLOROETHENE	5	ND	n-PROPYLBENZENE	5	ND
2-BUTANONE	10	ND	2-CHLOROTOLUENE	5	ND
BROMOCHLOROMETHANE	5	ND	1,3,5-TRIMETHYLBENZENE	5	ND
CHLOROFORM	5	ND	4-CHLOROTOLUENE	5	ND
1,1,1-TRICHLOROETHANE	5	ND	TERT-BUTYLBENZENE	5	ND
CARBON TETRACHLORIDE	5	ND	1,2,4-TRIMETHYLBENZENE	5	ND
1,1-DICHLOROPROPENE	5	ND	sec-BUTYLBENZENE	5	ND
BENZENE	5	ND	1,3-DICHLOROBENZENE	5	ND
1,2-DICHLOROETHANE	5	ND	p-ISOPROPYLTOLUENE	5	ND
TRICHLOROETHENE	5	ND	1,4-DICHLOROBENZENE	5	ND
1,2-DICHLOROPROPANE	5	ND	n-BUTYLBENZENE	5	ND
DIBROMOMETHANE	5	ND	1,2-DICHLOROBENZENE	5	ND
BROMODICHLOROMETHANE	5	ND	1,2-DIBROMO-3-CHLOROPROPANE	5	ND
cis-1,3-DICHLOROPROPENE	5	ND	1,2,4-TRICHLOROBENZENE	5	ND
4-METHYL-2-PENTANONE	10	ND	HEXACHLOROBUTADIENE	5	ND
1,2,3-TRICHLOROBENZENE	5	ND	NAPHTHALENE	5	ND

QA/QC SURROGATE RECOVERIES

TOLUENE-d8(81-117) 104% BROMOFLUOROBENZENE(74-121) 106%
1,2-DICHLOROETHANE-D4(70-121) 100%

B = ANALYTE DETECTED IN METHOD BLANK, POSSIBLY BELOW THE REPORTING LIMIT.
ND = NOT DETECTED ABOVE REPORTING LIMIT
RL = REPORTING LIMIT; DEFINED AS THE PRACTICAL QUANTITATION LIMIT PLUS ANY DILUTION, POSITIVE VALUES BELOW THIS LIMIT WERE NOT REPORTED.

ATAS 875 Fee Fee Road • Maryland Heights, MO 63043 • (314) 434-4570 - FAX (314) 434-0080

CLIENT: DAMES & MOORE
721 EMERSON ROAD, SUITE 220
ST. LOUIS, MO 63141
ATTN: GEORGE JONES

REPORT: 2891201VO(720)

DATE : 02-14-00

SAMPLE MATRIX : SOIL
ATAS # : 28912.02
DATE SUBMITTED: 02-09-00
DATE ANALYZED : 02-09-00

METHOD REF.: SW846-8260B, EPA METHODOLOGY
PROJECT # : 27994-022-045 - PENTAIR
SAMPLE ID : MW-12-10'

RESULTS REPORTED IN ug/Kg OR Parts Per Billion (PPB)

VOLATILES	R.L.	RESULTS	VOLATILES	R.L.	RESULTS
XYLENE (TOTAL)	5	ND	TOLUENE	5	ND
DICHLORODIFLUOROMETHANE	10	ND	trans-1,3-DICHLOROPROPENE	5	ND
CHLOROMETHANE	10	ND	1,1,2-TRICHLOROETHANE	5	ND
VINYL CHLORIDE	10	ND	TETRACHLOROETHENE	5	ND
BROMOMETHANE	10	ND	1,3-DICHLOROPROPANE	5	ND
CHLOROETHANE	10	ND	2-HEXANONE	10	ND
TRICHLOROFLUOROMETHANE	10	ND	DIBROMOCHLOROMETHANE	5	ND
1,1-DICHLOROETHENE	5	ND	1,2-DIBROMOETHANE	5	ND
ACETONE	10	ND	CHLOROBENZENE	5	ND
IODOMETHANE	10	ND	1,1,1,2-TETRACHLOROETHANE	5	ND
CARBON DISULFIDE	5	ND	ETHYLBENZENE	5	ND
METHYLENE CHLORIDE	5	10 B	STYRENE	5	ND
trans-1,2-DICHLOROETHENE	5	ND	BROMOFORM	5	ND
M YL TERT-BUTYL ETHER	10	ND	ISOPROPYLBENZENE	5	ND
1, DICHLOROETHANE	5	ND	1,1,2,2-TETRACHLOROETHANE	5	ND
VINYL ACETATE	10	ND	BROMOBENZENE	5	ND
2,2-DICHLOROPROPANE	5	ND	1,2,3-TRICHLOROPROPANE	5	ND
cis-1,2-DICHLOROETHENE	5	ND	n-PROPYLBENZENE	5	ND
2-BUTANONE	10	ND	2-CHLOROTOLUENE	5	ND
BROMOCHLOROMETHANE	5	ND	1,3,5-TRIMETHYLBENZENE	5	ND
CHLOROFORM	5	ND	4-CHLOROTOLUENE	5	ND
1,1,1-TRICHLOROETHANE	5	ND	TERT-BUTYLBENZENE	5	ND
CARBON TETRACHLORIDE	5	ND	1,2,4-TRIMETHYLBENZENE	5	ND
1,1-DICHLOROPROPENE	5	ND	sec-BUTYLBENZENE	5	ND
BENZENE	5	ND	1,3-DICHLOROBENZENE	5	ND
1,2-DICHLOROETHANE	5	ND	p-ISOPROPYLTOLUENE	5	ND
TRICHLOROETHENE	5	ND	1,4-DICHLOROBENZENE	5	ND
1,2-DICHLOROPROPANE	5	ND	n-BUTYLBENZENE	5	ND
DIBROMOMETHANE	5	ND	1,2-DICHLOROBENZENE	5	ND
BROMODICHLOROMETHANE	5	ND	1,2-DIBROMO-3-CHLOROPROPANE	5	ND
cis-1,3-DICHLOROPROPENE	5	ND	1,2,4-TRICHLOROBENZENE	5	ND
4-METHYL-2-PENTANONE	10	ND	HEXACHLOROBUTADIENE	5	ND
1,2,3-TRICHLOROBENZENE	5	ND	NAPHTHALENE	5	ND

QA/QC SURROGATE RECOVERIES

TOLUENE-d8(81-117) 103% BROMOFLUOROBENZENE(74-121) 107%
1,2-DICHLOROETHANE-D4(70-121) 98%

B = ANALYTE DETECTED IN METHOD BLANK, POSSIBLY BELOW THE REPORTING LIMIT.
ND = NOT DETECTED ABOVE REPORTING LIMIT
RL = REPORTING LIMIT; DEFINED AS THE PRACTICAL QUANTITATION LIMIT PLUS ANY DILUTION, POSITIVE VALUES BELOW THIS LIMIT WERE NOT REPORTED.

ATAS 875 Fee Fee Road • Maryland Heights, MO 63043 • (314) 434-4570 - FAX (314) 434-0080

CLIENT: DAMES & MOORE
721 EMERSON ROAD, SUITE 220
ST. LOUIS, MO 63141
ATTN: GEORGE JONES

REPORT: 2889901VO(720)

DATE : 02-14-00

SAMPLE MATRIX : SOIL
ATAS # : 28899.01
DATE SUBMITTED: 02-08-00
DATE ANALYZED : 02-08-00

METHOD REF.: SW846-8260B, EPA METHODOLOGY
PROJECT : PENTAIR
SAMPLE ID : GP-1-7'

RESULTS REPORTED IN ug/Kg OR Parts Per Billion (PPB)

VOLATILES	R.L.	RESULTS	VOLATILES	R.L.	RESULTS
XYLENE (TOTAL)	5	ND	TOLUENE	5	ND
DICHLORODIFLUOROMETHANE	10	ND	trans-1,3-DICHLOROPROPENE	5	ND
CHLOROMETHANE	10	ND	1,1,2-TRICHLOROETHANE	5	ND
VINYL CHLORIDE	10	ND	TETRACHLOROETHENE	5	ND
BROMOMETHANE	10	ND	1,3-DICHLOROPROPANE	5	ND
CHLOROETHANE	10	ND	2-HEXANONE	10	ND
TRICHLOROFLUOROMETHANE	10	ND	DIBROMOCHLOROMETHANE	5	ND
1,1-DICHLOROETHENE	5	ND	1,2-DIBROMOETHANE	5	ND
ACETONE	10	34	CHLOROBENZENE	5	ND
IODOMETHANE	10	ND	1,1,1,2-TETRACHLOROETHANE	5	ND
CARBON DISULFIDE	5	ND	ETHYLBENZENE	5	ND
METHYLENE CHLORIDE	5	14 B	STYRENE	5	ND
trans-1,2-DICHLOROETHENE	5	ND	BROMOFORM	5	ND
M YL TERT-BUTYL ETHER	10	ND	ISOPROPYLBENZENE	5	ND
1, DICHLOROETHANE	5	ND	1,1,2,2-TETRACHLOROETHANE	5	ND
VINYL ACETATE	10	ND	BROMOBENZENE	5	ND
2,2-DICHLOROPROPANE	5	ND	1,2,3-TRICHLOROPROPANE	5	ND
cis-1,2-DICHLOROETHENE	5	ND	n-PROPYLBENZENE	5	ND
2-BUTANONE	10	ND	2-CHLOROTOLUENE	5	ND
BROMOCHLOROMETHANE	5	ND	1,3,5-TRIMETHYLBENZENE	5	ND
CHLOROFORM	5	ND	4-CHLOROTOLUENE	5	ND
1,1,1-TRICHLOROETHANE	5	ND	TERT-BUTYLBENZENE	5	ND
CARBON TETRACHLORIDE	5	ND	1,2,4-TRIMETHYLBENZENE	5	ND
1,1-DICHLOROPROPENE	5	ND	sec-BUTYLBENZENE	5	ND
BENZENE	5	ND	1,3-DICHLOROBENZENE	5	ND
1,2-DICHLOROETHANE	5	ND	p-ISOPROPYLTOLUENE	5	ND
TRICHLOROETHENE	5	ND	1,4-DICHLOROBENZENE	5	ND
1,2-DICHLOROPROPANE	5	ND	n-BUTYLBENZENE	5	ND
DIBROMOMETHANE	5	ND	1,2-DICHLOROBENZENE	5	ND
BROMODICHLOROMETHANE	5	ND	1,2-DIBROMO-3-CHLOROPROPANE	5	ND
cis-1,3-DICHLOROPROPENE	5	ND	1,2,4-TRICHLOROBENZENE	5	ND
4-METHYL-2-PENTANONE	10	ND	HEXACHLOROBUTADIENE	5	ND
1,2,3-TRICHLOROBENZENE	5	ND	NAPHTHALENE	5	ND

QA/QC SURROGATE RECOVERIES

TOLUENE-d8(81-117) 105% BROMOFLUOROBENZENE(74-121) 107%
1,2-DICHLOROETHANE-D4(70-121) 102%

B = ANALYTE DETECTED IN METHOD BLANK, POSSIBLY BELOW THE REPORTING LIMIT.
ND = NOT DETECTED ABOVE REPORTING LIMIT
RL = REPORTING LIMIT; DEFINED AS THE PRACTICAL QUANTITATION LIMIT PLUS ANY DILUTION, POSITIVE VALUES BELOW THIS LIMIT WERE NOT REPORTED.

ATAS 875 Fee Fee Road • Maryland Heights, MO 63043 • (314) 434-4570 - FAX (314) 434-0080

REPORT: 2889901VO(720)

CLIENT: DAMES & MOORE
721 EMERSON ROAD, SUITE 220
ST. LOUIS, MO 63141
ATTN: GEORGE JONES

DATE : 02-14-00

SAMPLE MATRIX : SOIL
ATAS # : 28899.02
DATE SUBMITTED: 02-08-00
DATE ANALYZED : 02-08-00

METHOD REF.: SW846-8260B, EPA METHODOLOGY
PROJECT : PENTAIR
SAMPLE ID : GP-1-10'

RESULTS REPORTED IN ug/Kg OR Parts Per Billion (PPB)

VOLATILES	R.L.	RESULTS	VOLATILES	R.L.	RESULTS
XYLENE (TOTAL)	5	ND	TOLUENE	5	ND
DICHLORODIFLUOROMETHANE	10	ND	trans-1,3-DICHLOROPROPENE	5	ND
CHLOROMETHANE	10	ND	1,1,2-TRICHLOROETHANE	5	ND
VINYL CHLORIDE	10	ND	TETRACHLOROETHENE	5	ND
BROMOMETHANE	10	ND	1,3-DICHLOROPROPANE	5	ND
CHLOROETHANE	10	ND	2-HEXANONE	10	ND
TRICHLOROFLUOROMETHANE	10	ND	DIBROMOCHLOROMETHANE	5	ND
1,1-DICHLOROETHENE	5	ND	1,2-DIBROMOETHANE	5	ND
ACETONE	10	47	CHLOROBENZENE	5	ND
IODOMETHANE	10	ND	1,1,1,2-TETRACHLOROETHANE	5	ND
CARBON DISULFIDE	5	ND	ETHYLBENZENE	5	ND
METHYLENE CHLORIDE	5	13 B	STYRENE	5	ND
t ns-1,2-DICHLOROETHENE	5	ND	BROMOFORM	5	ND
l YL TERT-BUTYL ETHER	10	ND	ISOPROPYLBENZENE	5	ND
1,1-DICHLOROETHANE	5	ND	1,1,2,2-TETRACHLOROETHANE	5	ND
VINYL ACETATE	10	ND	BROMOBENZENE	5	ND
2,2-DICHLOROPROPANE	5	ND	1,2,3-TRICHLOROPROPANE	5	ND
cis-1,2-DICHLOROETHENE	5	ND	n-PROPYLBENZENE	5	ND
2-BUTANONE	10	ND	2-CHLOROTOLUENE	5	ND
BROMOCHLOROMETHANE	5	ND	1,3,5-TRIMETHYLBENZENE	5	ND
CHLOROFORM	5	ND	4-CHLOROTOLUENE	5	ND
1,1,1-TRICHLOROETHANE	5	ND	TERT-BUTYLBENZENE	5	ND
CARBON TETRACHLORIDE	5	ND	1,2,4-TRIMETHYLBENZENE	5	ND
1,1-DICHLOROPROPENE	5	ND	sec-BUTYLBENZENE	5	ND
BENZENE	5	ND	1,3-DICHLOROBENZENE	5	ND
1,2-DICHLOROETHANE	5	ND	p-ISOPROPYLTOLUENE	5	ND
TRICHLOROETHENE	5	ND	1,4-DICHLOROBENZENE	5	ND
1,2-DICHLOROPROPANE	5	ND	n-BUTYLBENZENE	5	ND
DIBROMOMETHANE	5	ND	1,2-DICHLOROBENZENE	5	ND
BROMODICHLOROMETHANE	5	ND	1,2-DIBROMO-3-CHLOROPROPANE	5	ND
cis-1,3-DICHLOROPROPENE	5	ND	1,2,4-TRICHLOROBENZENE	5	ND
4-METHYL-2-PENTANONE	10	ND	HEXACHLOROBUTADIENE	5	ND
1,2,3-TRICHLOROBENZENE	5	ND	NAPHTHALENE	5	ND

QA/QC SURROGATE RECOVERIES

TOLUENE-d8(81-117) 102% BROMOFLUOROBENZENE(74-121) 106%
1,2-DICHLOROETHANE-D4(70-121) 99%

B = ANALYTE DETECTED IN METHOD BLANK, POSSIBLY BELOW THE REPORTING LIMIT.
ND = NOT DETECTED ABOVE REPORTING LIMIT
RL = REPORTING LIMIT; DEFINED AS THE PRACTICAL QUANTITATION LIMIT PLUS ANY DILUTION, POSITIVE VALUES BELOW THIS LIMIT WERE NOT REPORTED.

ATAS 875 Fee Fee Road • Maryland Heights, MO 63043 • (314) 434-4570 - FAX (314) 434-0080

CLIENT: DAMES & MOORE
721 EMERSON ROAD, SUITE 220
ST. LOUIS, MO 63141
ATTN: GEORGE JONES

REPORT: 2889901VO(720)

DATE : 02-14-00

SAMPLE MATRIX : SOIL
ATAS # : 28899.03
DATE SUBMITTED: 02-08-00
DATE ANALYZED : 02-08-00

METHOD REF.: SW846-8260B, EPA METHODOLOGY
PROJECT : PENTAIR
SAMPLE ID : GP-2-10'

RESULTS REPORTED IN ug/Kg OR Parts Per Billion (PPB)

VOLATILES	R.L.	RESULTS	VOLATILES	R.L.	RESULTS
XYLENE (TOTAL)	5	ND	TOLUENE	5	ND
DICHLORODIFLUOROMETHANE	10	ND	trans-1,3-DICHLOROPROPENE	5	ND
CHLOROMETHANE	10	ND	1,1,2-TRICHLOROETHANE	5	ND
VINYL CHLORIDE	10	13	TETRACHLOROETHENE	5	ND
BROMOMETHANE	10	ND	1,3-DICHLOROPROPANE	5	ND
CHLOROETHANE	10	ND	2-HEXANONE	10	ND
TRICHLOROFLUOROMETHANE	10	ND	DIBROMOCHLOROMETHANE	5	ND
1,1-DICHLOROETHENE	5	ND	1,2-DIBROMOETHANE	5	ND
ACETONE	10	28	CHLOROBENZENE	5	ND
IODOMETHANE	10	ND	1,1,1,2-TETRACHLOROETHANE	5	ND
CARBON DISULFIDE	5	ND	ETHYLBENZENE	5	ND
METHYLENE CHLORIDE	5	13 B	STYRENE	5	ND
trans-1,2-DICHLOROETHENE	5	ND	BROMOFORM	5	ND
[illegible]YL TERT-BUTYL ETHER	10	ND	ISOPROPYLBENZENE	5	ND
1,[illegible]-DICHLOROETHANE	5	ND	1,1,2,2-TETRACHLOROETHANE	5	ND
VINYL ACETATE	10	ND	BROMOBENZENE	5	ND
2,2-DICHLOROPROPANE	5	ND	1,2,3-TRICHLOROPROPANE	5	ND
cis-1,2-DICHLOROETHENE	5	9	n-PROPYLBENZENE	5	ND
2-BUTANONE	10	ND	2-CHLOROTOLUENE	5	ND
BROMOCHLOROMETHANE	5	ND	1,3,5-TRIMETHYLBENZENE	5	ND
CHLOROFORM	5	ND	4-CHLOROTOLUENE	5	ND
1,1,1-TRICHLOROETHANE	5	ND	TERT-BUTYLBENZENE	5	ND
CARBON TETRACHLORIDE	5	ND	1,2,4-TRIMETHYLBENZENE	5	ND
1,1-DICHLOROPROPENE	5	ND	sec-BUTYLBENZENE	5	ND
BENZENE	5	ND	1,3-DICHLOROBENZENE	5	ND
1,2-DICHLOROETHANE	5	ND	p-ISOPROPYLTOLUENE	5	ND
TRICHLOROETHENE	5	ND	1,4-DICHLOROBENZENE	5	ND
1,2-DICHLOROPROPANE	5	ND	n-BUTYLBENZENE	5	ND
DIBROMOMETHANE	5	ND	1,2-DICHLOROBENZENE	5	ND
BROMODICHLOROMETHANE	5	ND	1,2-DIBROMO-3-CHLOROPROPANE	5	ND
cis-1,3-DICHLOROPROPENE	5	ND	1,2,4-TRICHLOROBENZENE	5	ND
4-METHYL-2-PENTANONE	10	ND	HEXACHLOROBUTADIENE	5	ND
1,2,3-TRICHLOROBENZENE	5	ND	NAPHTHALENE	5	ND

QA/QC SURROGATE RECOVERIES

TOLUENE-d8(81-117) 102% BROMOFLUOROBENZENE(74-121) 106%
1,2-DICHLOROETHANE-D4(70-121) 98%

B = ANALYTE DETECTED IN METHOD BLANK, POSSIBLY BELOW THE REPORTING LIMIT.
ND = NOT DETECTED ABOVE REPORTING LIMIT
RL = REPORTING LIMIT; DEFINED AS THE PRACTICAL QUANTITATION LIMIT PLUS ANY DILUTION, POSITIVE VALUES BELOW THIS LIMIT WERE NOT REPORTED.

ATAS 875 Fee Fee Road • Maryland Heights, MO 63043 • (314) 434-4570 - FAX (314) 434-0080

CLIENT: DAMES & MOORE
721 EMERSON ROAD, SUITE 220
ST. LOUIS, MO 63141
ATTN: GEORGE JONES

REPORT: 2889901VO(720)

DATE : 02-14-00

SAMPLE MATRIX : SOIL
ATAS # : 28899..04
DATE SUBMITTED: 02-08-00
DATE ANALYZED : 02-08-00

METHOD REF.: SW846-8260B, EPA METHODOLOGY
PROJECT : PENTAIR
SAMPLE ID : GP-2-13'

RESULTS REPORTED IN ug/Kg OR Parts Per Billion (PPB)

VOLATILES	R.L.	RESULTS	VOLATILES	R.L.	RESULTS
XYLENE (TOTAL)	5	ND	TOLUENE	5	ND
DICHLORODIFLUOROMETHANE	10	ND	trans-1,3-DICHLOROPROPENE	5	ND
CHLOROMETHANE	10	ND	1,1,2-TRICHLOROETHANE	5	ND
VINYL CHLORIDE	10	13	TETRACHLOROETHENE	5	ND
BROMOMETHANE	10	ND	1,3-DICHLOROPROPANE	5	ND
CHLOROETHANE	10	ND	2-HEXANONE	10	ND
TRICHLOROFLUOROMETHANE	10	ND	DIBROMOCHLOROMETHANE	5	ND
1,1-DICHLOROETHENE	5	ND	1,2-DIBROMOETHANE	5	ND
ACETONE	10	27	CHLOROBENZENE	5	ND
IODOMETHANE	10	ND	1,1,1,2-TETRACHLOROETHANE	5	ND
CARBON DISULFIDE	5	ND	ETHYLBENZENE	5	ND
METHYLENE CHLORIDE	5	11 B	STYRENE	5	ND
trans-1,2-DICHLOROETHENE	5	ND	BROMOFORM	5	ND
[illegible]YL TERT-BUTYL ETHER	10	ND	ISOPROPYLBENZENE	5	ND
[illegible]-DICHLOROETHANE	5	ND	1,1,2,2-TETRACHLOROETHANE	5	ND
VINYL ACETATE	10	ND	BROMOBENZENE	5	ND
2,2-DICHLOROPROPANE	5	ND	1,2,3-TRICHLOROPROPANE	5	ND
cis-1,2-DICHLOROETHENE	5	13	n-PROPYLBENZENE	5	ND
2-BUTANONE	10	ND	2-CHLOROTOLUENE	5	ND
BROMOCHLOROMETHANE	5	ND	1,3,5-TRIMETHYLBENZENE	5	ND
CHLOROFORM	5	ND	4-CHLOROTOLUENE	5	ND
1,1,1-TRICHLOROETHANE	5	ND	TERT-BUTYLBENZENE	5	ND
CARBON TETRACHLORIDE	5	ND	1,2,4-TRIMETHYLBENZENE	5	ND
1,1-DICHLOROPROPENE	5	ND	sec-BUTYLBENZENE	5	ND
BENZENE	5	ND	1,3-DICHLOROBENZENE	5	ND
1,2-DICHLOROETHANE	5	ND	p-ISOPROPYLTOLUENE	5	ND
TRICHLOROETHENE	5	ND	1,4-DICHLOROBENZENE	5	ND
1,2-DICHLOROPROPANE	5	ND	n-BUTYLBENZENE	5	ND
DIBROMOMETHANE	5	ND	1,2-DICHLOROBENZENE	5	ND
BROMODICHLOROMETHANE	5	ND	1,2-DIBROMO-3-CHLOROPROPANE	5	ND
cis-1,3-DICHLOROPROPENE	5	ND	1,2,4-TRICHLOROBENZENE	5	ND
4-METHYL-2-PENTANONE	10	ND	HEXACHLOROBUTADIENE	5	ND
1,2,3-TRICHLOROBENZENE	5	ND	NAPHTHALENE	5	ND

QA/QC SURROGATE RECOVERIES

TOLUENE-d8(81-117) 104% BROMOFLUOROBENZENE(74-121) 106%
1,2-DICHLOROETHANE-D4(70-121) 99%

B = ANALYTE DETECTED IN METHOD BLANK, POSSIBLY BELOW THE REPORTING LIMIT.
ND = NOT DETECTED ABOVE REPORTING LIMIT
RL = REPORTING LIMIT; DEFINED AS THE PRACTICAL QUANTITATION LIMIT PLUS ANY DILUTION, POSITIVE VALUES BELOW THIS LIMIT WERE NOT REPORTED.

ATAS 875 Fee Fee Road • Maryland Heights, MO 63043 • (314) 434-4570 - FAX (314) 434-0080

CLIENT: DAMES & MOORE
721 EMERSON ROAD, SUITE 220
ST. LOUIS, MO 63141
ATTN: GEORGE JONES

REPORT: 2889901VO(720)

DATE : 02-14-00

SAMPLE MATRIX : SOIL
ATAS # : 28899.08
DATE SUBMITTED: 02-08-00
DATE ANALYZED : 02-08-00

METHOD REF.: SW846-8260B, EPA METHODOLOGY
PROJECT : PENTAIR
SAMPLE ID : GP-3-3'

RESULTS REPORTED IN ug/Kg OR Parts Per Billion (PPB)

VOLATILES	R.L.	RESULTS	VOLATILES	R.L.	RESULTS
XYLENE (TOTAL)	5	ND	TOLUENE	5	ND
DICHLORODIFLUOROMETHANE	10	ND	trans-1,3-DICHLOROPROPENE	5	ND
CHLOROMETHANE	10	ND	1,1,2-TRICHLOROETHANE	5	ND
VINYL CHLORIDE	10	ND	TETRACHLOROETHENE	5	ND
BROMOMETHANE	10	ND	1,3-DICHLOROPROPANE	5	ND
CHLOROETHANE	10	ND	2-HEXANONE	10	ND
TRICHLOROFLUOROMETHANE	10	ND	DIBROMOCHLOROMETHANE	5	ND
1,1-DICHLOROETHENE	5	ND	1,2-DIBROMOETHANE	5	ND
ACETONE	10	ND	CHLOROBENZENE	5	ND
IODOMETHANE	10	ND	1,1,1,2-TETRACHLOROETHANE	5	ND
CARBON DISULFIDE	5	ND	ETHYLBENZENE	5	ND
METHYLENE CHLORIDE	5	13 B	STYRENE	5	ND
trans-1,2-DICHLOROETHENE	5	ND	BROMOFORM	5	ND
[illegible]YL TERT-BUTYL ETHER	10	ND	ISOPROPYLBENZENE	5	ND
1,[illegible]-DICHLOROETHANE	5	ND	1,1,2,2-TETRACHLOROETHANE	5	ND
VINYL ACETATE	10	ND	BROMOBENZENE	5	ND
2,2-DICHLOROPROPANE	5	ND	1,2,3-TRICHLOROPROPANE	5	ND
cis-1,2-DICHLOROETHENE	5	ND	n-PROPYLBENZENE	5	ND
2-BUTANONE	10	ND	2-CHLOROTOLUENE	5	ND
BROMOCHLOROMETHANE	5	ND	1,3,5-TRIMETHYLBENZENE	5	ND
CHLOROFORM	5	ND	4-CHLOROTOLUENE	5	ND
1,1,1-TRICHLOROETHANE	5	ND	TERT-BUTYLBENZENE	5	ND
CARBON TETRACHLORIDE	5	ND	1,2,4-TRIMETHYLBENZENE	5	ND
1,1-DICHLOROPROPENE	5	ND	sec-BUTYLBENZENE	5	ND
BENZENE	5	ND	1,3-DICHLOROBENZENE	5	ND
1,2-DICHLOROETHANE	5	ND	p-ISOPROPYLTOLUENE	5	ND
TRICHLOROETHENE	5	ND	1,4-DICHLOROBENZENE	5	ND
1,2-DICHLOROPROPANE	5	ND	n-BUTYLBENZENE	5	ND
DIBROMOMETHANE	5	ND	1,2-DICHLOROBENZENE	5	ND
BROMODICHLOROMETHANE	5	ND	1,2-DIBROMO-3-CHLOROPROPANE	5	ND
cis-1,3-DICHLOROPROPENE	5	ND	1,2,4-TRICHLOROBENZENE	5	ND
4-METHYL-2-PENTANONE	10	ND	HEXACHLOROBUTADIENE	5	ND
1,2,3-TRICHLOROBENZENE	5	ND	NAPHTHALENE	5	ND

QA/QC SURROGATE RECOVERIES

TOLUENE-d8(81-117) 102% BROMOFLUOROBENZENE(74-121) 105%
1,2-DICHLOROETHANE-D4(70-121) 102%

B = ANALYTE DETECTED IN METHOD BLANK, POSSIBLY BELOW THE REPORTING LIMIT.
ND = NOT DETECTED ABOVE REPORTING LIMIT
RL = REPORTING LIMIT; DEFINED AS THE PRACTICAL QUANTITATION LIMIT PLUS ANY DILUTION, POSITIVE VALUES BELOW THIS LIMIT WERE NOT REPORTED.

ATAS 875 Fee Fee Road • Maryland Heights, MO 63043 • (314) 434-4570 - FAX (314) 434-0080

CLIENT: DAMES & MOORE
721 EMERSON ROAD, SUITE 220
ST. LOUIS, MO 63141
ATTN: GEORGE JONES

REPORT: 2889901VO(720)

DATE : 02-14-00

SAMPLE MATRIX : SOIL
ATAS # : 28899.09
DATE SUBMITTED: 02-08-00
DATE ANALYZED : 02-08-00

METHOD REF.: SW846-8260B, EPA METHODOLOGY
PROJECT : PENTAIR
SAMPLE ID : GP-3-7'

RESULTS REPORTED IN ug/Kg OR Parts Per Billion (PPB)

VOLATILES	R.L.	RESULTS	VOLATILES	R.L.	RESULTS
XYLENE (TOTAL)	5	ND	TOLUENE	5	ND
DICHLORODIFLUOROMETHANE	10	ND	trans-1,3-DICHLOROPROPENE	5	ND
CHLOROMETHANE	10	ND	1,1,2-TRICHLOROETHANE	5	ND
VINYL CHLORIDE	10	45	TETRACHLOROETHENE	5	ND
BROMOMETHANE	10	ND	1,3-DICHLOROPROPANE	5	ND
CHLOROETHANE	10	ND	2-HEXANONE	10	ND
TRICHLOROFLUOROMETHANE	10	ND	DIBROMOCHLOROMETHANE	5	ND
1,1-DICHLOROETHENE	5	ND	1,2-DIBROMOETHANE	5	ND
ACETONE	10	ND	CHLOROBENZENE	5	ND
IODOMETHANE	10	ND	1,1,1,2-TETRACHLOROETHANE	5	ND
CARBON DISULFIDE	5	ND	ETHYLBENZENE	5	ND
METHYLENE CHLORIDE	5	11 B	STYRENE	5	ND
trans-1,2-DICHLOROETHENE	5	ND	BROMOFORM	5	ND
METHYL TERT-BUTYL ETHER	10	ND	ISOPROPYLBENZENE	5	ND
DICHLOROETHANE	5	ND	1,1,2,2-TETRACHLOROETHANE	5	ND
VINYL ACETATE	10	ND	BROMOBENZENE	5	ND
2,2-DICHLOROPROPANE	5	ND	1,2,3-TRICHLOROPROPANE	5	ND
cis-1,2-DICHLOROETHENE	5	110	n-PROPYLBENZENE	5	ND
2-BUTANONE	10	ND	2-CHLOROTOLUENE	5	ND
BROMOCHLOROMETHANE	5	ND	1,3,5-TRIMETHYLBENZENE	5	ND
CHLOROFORM	5	ND	4-CHLOROTOLUENE	5	ND
1,1,1-TRICHLOROETHANE	5	ND	TERT-BUTYLBENZENE	5	ND
CARBON TETRACHLORIDE	5	ND	1,2,4-TRIMETHYLBENZENE	5	ND
1,1-DICHLOROPROPENE	5	ND	sec-BUTYLBENZENE	5	ND
BENZENE	5	ND	1,3-DICHLOROBENZENE	5	ND
1,2-DICHLOROETHANE	5	ND	p-ISOPROPYLTOLUENE	5	ND
TRICHLOROETHENE	5	120	1,4-DICHLOROBENZENE	5	ND
1,2-DICHLOROPROPANE	5	ND	n-BUTYLBENZENE	5	ND
DIBROMOMETHANE	5	ND	1,2-DICHLOROBENZENE	5	ND
BROMODICHLOROMETHANE	5	ND	1,2-DIBROMO-3-CHLOROPROPANE	5	ND
cis-1,3-DICHLOROPROPENE	5	ND	1,2,4-TRICHLOROBENZENE	5	ND
4-METHYL-2-PENTANONE	10	ND	HEXACHLOROBUTADIENE	5	ND
1,2,3-TRICHLOROBENZENE	5	ND	NAPHTHALENE	5	ND

QA/QC SURROGATE RECOVERIES

TOLUENE-d8(81-117) 102% BROMOFLUOROBENZENE(74-121) 107%
1,2-DICHLOROETHANE-D4(70-121) 96%

B ANALYTE DETECTED IN METHOD BLANK, POSSIBLY BELOW THE REPORTING LIMIT.
ND = NOT DETECTED ABOVE REPORTING LIMIT
RL = REPORTING LIMIT; DEFINED AS THE PRACTICAL QUANTITATION LIMIT PLUS ANY DILUTION. POSITIVE VALUES BELOW THIS LIMIT WERE NOT REPORTED.

ATAS 875 Fee Fee Road • Maryland Heights, MO 63043 • (314) 434-4570 - FAX (314) 434-0080

CLIENT: DAMES & MOORE
721 EMERSON ROAD, SUITE 220
ST. LOUIS, MO 63141
ATTN: GEORGE JONES

REPORT: 2889901VO(720)

DATE : 02-14-00

SAMPLE MATRIX : SOIL
ATAS # : 28899.10
DATE SUBMITTED: 02-08-00
DATE ANALYZED : 02-09-00

METHOD REF.: SW846-8260B, EPA METHODOLOGY
PROJECT : PENTAIR
SAMPLE ID : GP-4-3'

RESULTS REPORTED IN ug/Kg OR Parts Per Billion (PPB)

VOLATILES	R.L.	RESULTS	VOLATILES	R.L.	RESULTS
XYLENE (TOTAL)	5	ND	TOLUENE	5	ND
DICHLORODIFLUOROMETHANE	10	ND	trans-1,3-DICHLOROPROPENE	5	ND
CHLOROMETHANE	10	ND	1,1,2-TRICHLOROETHANE	5	ND
VINYL CHLORIDE	10	ND	TETRACHLOROETHENE	5	ND
BROMOMETHANE	10	ND	1,3-DICHLOROPROPANE	5	ND
CHLOROETHANE	10	ND	2-HEXANONE	10	ND
TRICHLOROFLUOROMETHANE	10	ND	DIBROMOCHLOROMETHANE	5	ND
1,1-DICHLOROETHENE	5	ND	1,2-DIBROMOETHANE	5	ND
ACETONE	10	64	CHLOROBENZENE	5	ND
IODOMETHANE	10	ND	1,1,1,2-TETRACHLOROETHANE	5	ND
CARBON DISULFIDE	5	ND	ETHYLBENZENE	5	ND
METHYLENE CHLORIDE	5	13 B	STYRENE	5	ND
trans-1,2-DICHLOROETHENE	5	ND	BROMOFORM	5	ND
M[illegible]YL TERT-BUTYL ETHER	10	ND	ISOPROPYLBENZENE	5	ND
1,1-DICHLOROETHANE	5	ND	1,1,2,2-TETRACHLOROETHANE	5	ND
VINYL ACETATE	10	ND	BROMOBENZENE	5	ND
2,2-DICHLOROPROPANE	5	ND	1,2,3-TRICHLOROPROPANE	5	ND
cis-1,2-DICHLOROETHENE	5	ND	n-PROPYLBENZENE	5	ND
2-BUTANONE	10	ND	2-CHLOROTOLUENE	5	ND
BROMOCHLOROMETHANE	5	ND	1,3,5-TRIMETHYLBENZENE	5	ND
CHLOROFORM	5	ND	4-CHLOROTOLUENE	5	ND
1,1,1-TRICHLOROETHANE	5	ND	TERT-BUTYLBENZENE	5	ND
CARBON TETRACHLORIDE	5	ND	1,2,4-TRIMETHYLBENZENE	5	ND
1,1-DICHLOROPROPENE	5	ND	sec-BUTYLBENZENE	5	ND
BENZENE	5	ND	1,3-DICHLOROBENZENE	5	ND
1,2-DICHLOROETHANE	5	ND	p-ISOPROPYLTOLUENE	5	ND
TRICHLOROETHENE	5	ND	1,4-DICHLOROBENZENE	5	ND
1,2-DICHLOROPROPANE	5	ND	n-BUTYLBENZENE	5	ND
DIBROMOMETHANE	5	ND	1,2-DICHLOROBENZENE	5	ND
BROMODICHLOROMETHANE	5	ND	1,2-DIBROMO-3-CHLOROPROPANE	5	ND
cis-1,3-DICHLOROPROPENE	5	ND	1,2,4-TRICHLOROBENZENE	5	ND
4-METHYL-2-PENTANONE	10	ND	HEXACHLOROBUTADIENE	5	ND
1,2,3-TRICHLOROBENZENE	5	ND	NAPHTHALENE	5	ND

QA/QC SURROGATE RECOVERIES

TOLUENE-d8(81-117) 102% BROMOFLUOROBENZENE(74-121) 104%
1,2-DICHLOROETHANE-D4(70-121) 101%

B = ANALYTE DETECTED IN METHOD BLANK, POSSIBLY BELOW THE REPORTING LIMIT.
ND = NOT DETECTED ABOVE REPORTING LIMIT
RL = REPORTING LIMIT; DEFINED AS THE PRACTICAL QUANTITATION LIMIT PLUS ANY DILUTION, POSITIVE VALUES BELOW THIS LIMIT WERE NOT REPORTED.

ATAS 875 Fee Fee Road • Maryland Heights, MO 63043 • (314) 434-4570 - FAX (314) 434-0080

CLIENT: DAMES & MOORE
721 EMERSON ROAD, SUITE 220
ST. LOUIS, MO 63141
ATTN: GEORGE JONES

REPORT: 2889901VO(720)

DATE : 02-14-00

SAMPLE MATRIX : SOIL
ATAS # : 28899.11
DATE SUBMITTED: 02-08-00
DATE ANALYZED : 02-09-00

METHOD REF.: SW846-8260B, EPA METHODOLOGY
PROJECT : PENTAIR
SAMPLE ID : GP-4-10'

RESULTS REPORTED IN ug/Kg OR Parts Per Billion (PPB)

VOLATILES	R.L.	RESULTS	VOLATILES	R.L.	RESULTS
XYLENE (TOTAL)	5	ND	TOLUENE	5	ND
DICHLORODIFLUOROMETHANE	10	ND	trans-1,3-DICHLOROPROPENE	5	ND
CHLOROMETHANE	10	ND	1,1,2-TRICHLOROETHANE	5	ND
VINYL CHLORIDE	10	ND	TETRACHLOROETHENE	5	ND
BROMOMETHANE	10	ND	1,3-DICHLOROPROPANE	5	ND
CHLOROETHANE	10	ND	2-HEXANONE	10	ND
TRICHLOROFLUOROMETHANE	10	ND	DIBROMOCHLOROMETHANE	5	ND
1,1-DICHLOROETHENE	5	ND	1,2-DIBROMOETHANE	5	ND
ACETONE	10	ND	CHLOROBENZENE	5	ND
IODOMETHANE	10	ND	1,1,1,2-TETRACHLOROETHANE	5	ND
CARBON DISULFIDE	5	ND	ETHYLBENZENE	5	ND
METHYLENE CHLORIDE	5	11 B	STYRENE	5	ND
trans-1,2-DICHLOROETHENE	5	ND	BROMOFORM	5	ND
) YL TERT-BUTYL ETHER	10	ND	ISOPROPYLBENZENE	5	ND
1 DICHLOROETHANE	5	ND	1,1,2,2-TETRACHLOROETHANE	5	ND
VINYL ACETATE	10	ND	BROMOBENZENE	5	ND
2,2-DICHLOROPROPANE	5	ND	1,2,3-TRICHLOROPROPANE	5	ND
cis-1,2-DICHLOROETHENE	5	ND	n-PROPYLBENZENE	5	ND
2-BUTANONE	10	ND	2-CHLOROTOLUENE	5	ND
BROMOCHLOROMETHANE	5	ND	1,3,5-TRIMETHYLBENZENE	5	ND
CHLOROFORM	5	ND	4-CHLOROTOLUENE	5	ND
1,1,1-TRICHLOROETHANE	5	ND	TERT-BUTYLBENZENE	5	ND
CARBON TETRACHLORIDE	5	ND	1,2,4-TRIMETHYLBENZENE	5	ND
1,1-DICHLOROPROPENE	5	ND	sec-BUTYLBENZENE	5	ND
BENZENE	5	ND	1,3-DICHLOROBENZENE	5	ND
1,2-DICHLOROETHANE	5	ND	p-ISOPROPYLTOLUENE	5	ND
TRICHLOROETHENE	5	ND	1,4-DICHLOROBENZENE	5	ND
1,2-DICHLOROPROPANE	5	ND	n-BUTYLBENZENE	5	ND
DIBROMOMETHANE	5	ND	1,2-DICHLOROBENZENE	5	ND
BROMODICHLOROMETHANE	5	ND	1,2-DIBROMO-3-CHLOROPROPANE	5	ND
cis-1,3-DICHLOROPROPENE	5	ND	1,2,4-TRICHLOROBENZENE	5	ND
4-METHYL-2-PENTANONE	10	ND	HEXACHLOROBUTADIENE	5	ND
1,2,3-TRICHLOROBENZENE	5	ND	NAPHTHALENE	5	ND

QA/QC SURROGATE RECOVERIES

TOLUENE-d8(81-117) 101% BROMOFLUOROBENZENE(74-121) 103%
1,2-DICHLOROETHANE-D4(70-121) 100%

B = ANALYTE DETECTED IN METHOD BLANK, POSSIBLY BELOW THE REPORTING LIMIT.
ND = NOT DETECTED ABOVE REPORTING LIMIT
RL = REPORTING LIMIT; DEFINED AS THE PRACTICAL QUANTITATION LIMIT PLUS ANY DILUTION, POSITIVE VALUES BELOW THIS LIMIT WERE NOT REPORTED.

ATAS 875 Fee Fee Road • Maryland Heights, MO 63043 • (314) 434-4570 - FAX (314) 434-0080

CLIENT: DAMES & MOORE
721 EMERSON ROAD, SUITE 220
ST. LOUIS, MO 63141
ATTN: GEORGE JONES

REPORT: 2889901VO(720)

DATE : 02-14-00

SAMPLE MATRIX : SOIL
ATAS # : 28899.12
DATE SUBMITTED: 02-08-00
DATE ANALYZED : 02-09-00

METHOD REF.: SW846-8260B, EPA METHODOLOGY
PROJECT : PENTAIR
SAMPLE ID : GP-5-3'

RESULTS REPORTED IN ug/Kg OR Parts Per Billion (PPB)

VOLATILES	R.L.	RESULTS	VOLATILES	R.L.	RESULTS
XYLENE (TOTAL)	5	ND	TOLUENE	5	ND
DICHLORODIFLUOROMETHANE	10	ND	trans-1,3-DICHLOROPROPENE	5	ND
CHLOROMETHANE	10	ND	1,1,2-TRICHLOROETHANE	5	ND
VINYL CHLORIDE	10	ND	TETRACHLOROETHENE	5	ND
BROMOMETHANE	10	ND	1,3-DICHLOROPROPANE	5	ND
CHLOROETHANE	10	ND	2-HEXANONE	10	ND
TRICHLOROFLUOROMETHANE	10	ND	DIBROMOCHLOROMETHANE	5	ND
1,1-DICHLOROETHENE	5	ND	1,2-DIBROMOETHANE	5	ND
ACETONE	10	27	CHLOROBENZENE	5	ND
IODOMETHANE	10	ND	1,1,1,2-TETRACHLOROETHANE	5	ND
CARBON DISULFIDE	5	ND	ETHYLBENZENE	5	ND
METHYLENE CHLORIDE	5	11 B	STYRENE	5	ND
trans-1,2-DICHLOROETHENE	5	ND	BROMOFORM	5	ND
[illegible]YL TERT-BUTYL ETHER	10	ND	ISOPROPYLBENZENE	5	ND
1,[illegible]-DICHLOROETHANE	5	ND	1,1,2,2-TETRACHLOROETHANE	5	ND
VINYL ACETATE	10	ND	BROMOBENZENE	5	ND
2,2-DICHLOROPROPANE	5	ND	1,2,3-TRICHLOROPROPANE	5	ND
cis-1,2-DICHLOROETHENE	5	ND	n-PROPYLBENZENE	5	ND
2-BUTANONE	10	ND	2-CHLOROTOLUENE	5	ND
BROMOCHLOROMETHANE	5	ND	1,3,5-TRIMETHYLBENZENE	5	ND
CHLOROFORM	5	ND	4-CHLOROTOLUENE	5	ND
1,1,1-TRICHLOROETHANE	5	ND	TERT-BUTYLBENZENE	5	ND
CARBON TETRACHLORIDE	5	ND	1,2,4-TRIMETHYLBENZENE	5	ND
1,1-DICHLOROPROPENE	5	ND	sec-BUTYLBENZENE	5	10
BENZENE	5	ND	1,3-DICHLOROBENZENE	5	ND
1,2-DICHLOROETHANE	5	ND	p-ISOPROPYLTOLUENE	5	ND
TRICHLOROETHENE	5	17	1,4-DICHLOROBENZENE	5	ND
1,2-DICHLOROPROPANE	5	ND	n-BUTYLBENZENE	5	9
DIBROMOMETHANE	5	ND	1,2-DICHLOROBENZENE	5	ND
BROMODICHLOROMETHANE	5	ND	1,2-DIBROMO-3-CHLOROPROPANE	5	ND
cis-1,3-DICHLOROPROPENE	5	ND	1,2,4-TRICHLOROBENZENE	5	ND
4-METHYL-2-PENTANONE	10	ND	HEXACHLOROBUTADIENE	5	ND
1,2,3-TRICHLOROBENZENE	5	ND	NAPHTHALENE	5	ND

QA/QC SURROGATE RECOVERIES

TOLUENE-d8(81-117) 99% BROMOFLUOROBENZENE(74-121) 86%
1,2-DICHLOROETHANE-D4(70-121) 103%

B = ANALYTE DETECTED IN METHOD BLANK, POSSIBLY BELOW THE REPORTING LIMIT.
ND = NOT DETECTED ABOVE REPORTING LIMIT
RL = REPORTING LIMIT; DEFINED AS THE PRACTICAL QUANTITATION LIMIT PLUS ANY DILUTION, POSITIVE VALUES BELOW THIS LIMIT WERE NOT REPORTED.

ATAS 875 Fee Fee Road • Maryland Heights, MO 63043 • (314) 434-4570 - FAX (314) 434-0080

CLIENT: DAMES & MOORE
721 EMERSON ROAD, SUITE 220
ST. LOUIS, MO 63141
ATTN: GEORGE JONES

REPORT: 2889901VO(720)

DATE : 02-14-00

SAMPLE MATRIX : SOIL
ATAS # : 28899.13
DATE SUBMITTED: 02-08-00
DATE ANALYZED : 02-09-00

METHOD REF.: SW846-8260B, EPA METHODOLOGY
PROJECT : PENTAIR
SAMPLE ID : GP-5-11'

RESULTS REPORTED IN ug/Kg OR Parts Per Billion (PPB)

VOLATILES	R.L.	RESULTS	VOLATILES	R.L.	RESULTS
XYLENE (TOTAL)	5	ND	TOLUENE	5	ND
DICHLORODIFLUOROMETHANE	10	ND	trans-1,3-DICHLOROPROPENE	5	ND
CHLOROMETHANE	10	ND	1,1,2-TRICHLOROETHANE	5	ND
VINYL CHLORIDE	10	19	TETRACHLOROETHENE	5	ND
BROMOMETHANE	10	ND	1,3-DICHLOROPROPANE	5	ND
CHLOROETHANE	10	ND	2-HEXANONE	10	ND
TRICHLOROFLUOROMETHANE	10	ND	DIBROMOCHLOROMETHANE	5	ND
1,1-DICHLOROETHENE	5	ND	1,2-DIBROMOETHANE	5	ND
ACETONE	10	ND	CHLOROBENZENE	5	ND
IODOMETHANE	10	ND	1,1,1,2-TETRACHLOROETHANE	5	ND
CARBON DISULFIDE	5	ND	ETHYLBENZENE	5	ND
METHYLENE CHLORIDE	5	12 B	STYRENE	5	ND
trans-1,2-DICHLOROETHENE	5	ND	BROMOFORM	5	ND
[illegible]YL TERT-BUTYL ETHER	10	ND	ISOPROPYLBENZENE	5	ND
1,1-DICHLOROETHANE	5	ND	1,1,2,2-TETRACHLOROETHANE	5	ND
VINYL ACETATE	10	ND	BROMOBENZENE	5	ND
2,2-DICHLOROPROPANE	5	ND	1,2,3-TRICHLOROPROPANE	5	ND
cis-1,2-DICHLOROETHENE	5	100	n-PROPYLBENZENE	5	ND
2-BUTANONE	10	ND	2-CHLOROTOLUENE	5	ND
BROMOCHLOROMETHANE	5	ND	1,3,5-TRIMETHYLBENZENE	5	ND
CHLOROFORM	5	ND	4-CHLOROTOLUENE	5	ND
1,1,1-TRICHLOROETHANE	5	ND	TERT-BUTYLBENZENE	5	ND
CARBON TETRACHLORIDE	5	ND	1,2,4-TRIMETHYLBENZENE	5	ND
1,1-DICHLOROPROPENE	5	ND	sec-BUTYLBENZENE	5	ND
BENZENE	5	ND	1,3-DICHLOROBENZENE	5	ND
1,2-DICHLOROETHANE	5	ND	p-ISOPROPYLTOLUENE	5	ND
TRICHLOROETHENE	5	37	1,4-DICHLOROBENZENE	5	ND
1,2-DICHLOROPROPANE	5	ND	n-BUTYLBENZENE	5	ND
DIBROMOMETHANE	5	ND	1,2-DICHLOROBENZENE	5	ND
BROMODICHLOROMETHANE	5	ND	1,2-DIBROMO-3-CHLOROPROPANE	5	ND
cis-1,3-DICHLOROPROPENE	5	ND	1,2,4-TRICHLOROBENZENE	5	ND
4-METHYL-2-PENTANONE	10	ND	HEXACHLOROBUTADIENE	5	ND
1,2,3-TRICHLOROBENZENE	5	ND	NAPHTHALENE	5	ND

QA/QC SURROGATE RECOVERIES

TOLUENE-d8(81-117) 102% BROMOFLUOROBENZENE(74-121) 106%
1,2-DICHLOROETHANE-D4(70-121) 100%

B = ANALYTE DETECTED IN METHOD BLANK, POSSIBLY BELOW THE REPORTING LIMIT.
ND = NOT DETECTED ABOVE REPORTING LIMIT
RL = REPORTING LIMIT; DEFINED AS THE PRACTICAL QUANTITATION LIMIT PLUS ANY DILUTION, POSITIVE VALUES BELOW THIS LIMIT WERE NOT REPORTED.

ATAS 875 Fee Fee Road • Maryland Heights, MO 63043 • (314) 434-4570 - FAX (314) 434-0080

CLIENT: DAMES & MOORE
721 EMERSON ROAD, SUITE 220
ST. LOUIS, MO 63141
ATTN: GEORGE JONES

REPORT: 2889901VO(720)

DATE : 02-14-00

SAMPLE MATRIX : SOIL
ATAS # : 28899.14
DATE SUBMITTED: 02-08-00
DATE ANALYZED : 02-09-00

METHOD REF.: SW846-8260B, EPA METHODOLOGY
PROJECT : PENTAIR
SAMPLE ID : GP-6-6'

RESULTS REPORTED IN ug/Kg OR Parts Per Billion (PPB)

VOLATILES	R.L.	RESULTS	VOLATILES	R.L.	RESULTS
XYLENE (TOTAL)	5	ND	TOLUENE	5	ND
DICHLORODIFLUOROMETHANE	10	ND	trans-1,3-DICHLOROPROPENE	5	ND
CHLOROMETHANE	10	ND	1,1,2-TRICHLOROETHANE	5	ND
VINYL CHLORIDE	10	ND	TETRACHLOROETHENE	5	ND
BROMOMETHANE	10	ND	1,3-DICHLOROPROPANE	5	ND
CHLOROETHANE	10	ND	2-HEXANONE	10	ND
TRICHLOROFLUOROMETHANE	10	ND	DIBROMOCHLOROMETHANE	5	ND
1,1-DICHLOROETHENE	5	ND	1,2-DIBROMOETHANE	5	ND
ACETONE	10	ND	CHLOROBENZENE	5	ND
IODOMETHANE	10	ND	1,1,1,2-TETRACHLOROETHANE	5	ND
CARBON DISULFIDE	5	ND	ETHYLBENZENE	5	ND
METHYLENE CHLORIDE	5	12 B	STYRENE	5	ND
trans-1,2-DICHLOROETHENE	5	ND	BROMOFORM	5	ND
M TYL TERT-BUTYL ETHER	10	ND	ISOPROPYLBENZENE	5	ND
1 DICHLOROETHANE	5	ND	1,1,2,2-TETRACHLOROETHANE	5	ND
VINYL ACETATE	10	ND	BROMOBENZENE	5	ND
2,2-DICHLOROPROPANE	5	ND	1,2,3-TRICHLOROPROPANE	5	ND
cis-1,2-DICHLOROETHENE	5	ND	n-PROPYLBENZENE	5	ND
2-BUTANONE	10	ND	2-CHLOROTOLUENE	5	ND
BROMOCHLOROMETHANE	5	ND	1,3,5-TRIMETHYLBENZENE	5	ND
CHLOROFORM	5	ND	4-CHLOROTOLUENE	5	ND
1,1,1-TRICHLOROETHANE	5	ND	TERT-BUTYLBENZENE	5	ND
CARBON TETRACHLORIDE	5	ND	1,2,4-TRIMETHYLBENZENE	5	ND
1,1-DICHLOROPROPENE	5	ND	sec-BUTYLBENZENE	5	ND
BENZENE	5	ND	1,3-DICHLOROBENZENE	5	ND
1,2-DICHLOROETHANE	5	ND	p-ISOPROPYLTOLUENE	5	ND
TRICHLOROETHENE	5	17	1,4-DICHLOROBENZENE	5	ND
1,2-DICHLOROPROPANE	5	ND	n-BUTYLBENZENE	5	ND
DIBROMOMETHANE	5	ND	1,2-DICHLOROBENZENE	5	ND
BROMODICHLOROMETHANE	5	ND	1,2-DIBROMO-3-CHLOROPROPANE	5	ND
cis-1,3-DICHLOROPROPENE	5	ND	1,2,4-TRICHLOROBENZENE	5	ND
4-METHYL-2-PENTANONE	10	ND	HEXACHLOROBUTADIENE	5	ND
1,2,3-TRICHLOROBENZENE	5	ND	NAPHTHALENE	5	ND

QA/QC SURROGATE RECOVERIES

TOLUENE-d8(81-117) 99% BROMOFLUOROBENZENE(74-121) 103%
1,2-DICHLOROETHANE-D4(70-121) 98%

B = ANALYTE DETECTED IN METHOD BLANK, POSSIBLY BELOW THE REPORTING LIMIT.
ND = NOT DETECTED ABOVE REPORTING LIMIT
RL = REPORTING LIMIT; DEFINED AS THE PRACTICAL QUANTITATION LIMIT PLUS ANY DILUTION, POSITIVE VALUES BELOW THIS LIMIT WERE NOT REPORTED.

ATAS 875 Fee Fee Road • Maryland Heights, MO 63043 • (314) 434-4570 - FAX (314) 434-0080

CLIENT: DAMES & MOORE
721 EMERSON ROAD, SUITE 220
ST. LOUIS, MO 63141
ATTN: GEORGE JONES

REPORT: 2889901VO(720)

DATE : 02-14-00

SAMPLE MATRIX : SOIL
ATAS # : 28899.15
DATE SUBMITTED: 02-08-00
DATE ANALYZED : 02-09-00

METHOD REF.: SW846-8260B, EPA METHODOLOGY
PROJECT : PENTAIR
SAMPLE ID : GP-6-14'

RESULTS REPORTED IN ug/Kg OR Parts Per Billion (PPB)

VOLATILES	R.L.	RESULTS	VOLATILES	R.L.	RESULTS
XYLENE (TOTAL)	5	ND	TOLUENE	5	ND
DICHLORODIFLUOROMETHANE	10	ND	trans-1,3-DICHLOROPROPENE	5	ND
CHLOROMETHANE	10	ND	1,1,2-TRICHLOROETHANE	5	ND
VINYL CHLORIDE	10	ND	TETRACHLOROETHENE	5	ND
BROMOMETHANE	10	ND	1,3-DICHLOROPROPANE	5	ND
CHLOROETHANE	10	ND	2-HEXANONE	10	ND
TRICHLOROFLUOROMETHANE	10	ND	DIBROMOCHLOROMETHANE	5	ND
1,1-DICHLOROETHENE	5	ND	1,2-DIBROMOETHANE	5	ND
ACETONE	10	ND	CHLOROBENZENE	5	ND
IODOMETHANE	10	ND	1,1,1,2-TETRACHLOROETHANE	5	ND
CARBON DISULFIDE	5	ND	ETHYLBENZENE	5	ND
METHYLENE CHLORIDE	5	12 B	STYRENE	5	ND
trans-1,2-DICHLOROETHENE	5	ND	BROMOFORM	5	ND
[illegible]YL TERT-BUTYL ETHER	10	ND	ISOPROPYLBENZENE	5	ND
1,1-DICHLOROETHANE	5	ND	1,1,2,2-TETRACHLOROETHANE	5	ND
VINYL ACETATE	10	ND	BROMOBENZENE	5	ND
2,2-DICHLOROPROPANE	5	ND	1,2,3-TRICHLOROPROPANE	5	ND
cis-1,2-DICHLOROETHENE	5	ND	n-PROPYLBENZENE	5	ND
2-BUTANONE	10	ND	2-CHLOROTOLUENE	5	ND
BROMOCHLOROMETHANE	5	ND	1,3,5-TRIMETHYLBENZENE	5	ND
CHLOROFORM	5	ND	4-CHLOROTOLUENE	5	ND
1,1,1-TRICHLOROETHANE	5	ND	TERT-BUTYLBENZENE	5	ND
CARBON TETRACHLORIDE	5	ND	1,2,4-TRIMETHYLBENZENE	5	ND
1,1-DICHLOROPROPENE	5	ND	sec-BUTYLBENZENE	5	ND
BENZENE	5	ND	1,3-DICHLOROBENZENE	5	ND
1,2-DICHLOROETHANE	5	ND	p-ISOPROPYLTOLUENE	5	ND
TRICHLOROETHENE	5	ND	1,4-DICHLOROBENZENE	5	ND
1,2-DICHLOROPROPANE	5	ND	n-BUTYLBENZENE	5	ND
DIBROMOMETHANE	5	ND	1,2-DICHLOROBENZENE	5	ND
BROMODICHLOROMETHANE	5	ND	1,2-DIBROMO-3-CHLOROPROPANE	5	ND
cis-1,3-DICHLOROPROPENE	5	ND	1,2,4-TRICHLOROBENZENE	5	ND
4-METHYL-2-PENTANONE	10	ND	HEXACHLOROBUTADIENE	5	ND
1,2,3-TRICHLOROBENZENE	5	ND	NAPHTHALENE	5	ND

QA/QC SURROGATE RECOVERIES

TOLUENE-d8(81-117) 100% BROMOFLUOROBENZENE(74-121) 104%
1,2-DICHLOROETHANE-D4(70-121) 98%

B = ANALYTE DETECTED IN METHOD BLANK, POSSIBLY BELOW THE REPORTING LIMIT.
ND = NOT DETECTED ABOVE REPORTING LIMIT
RL = REPORTING LIMIT; DEFINED AS THE PRACTICAL QUANTITATION LIMIT PLUS ANY DILUTION, POSITIVE VALUES BELOW THIS LIMIT WERE NOT REPORTED.

ATAS 875 Fee Fee Road • Maryland Heights, MO 63043 • (314) 434-4570 - FAX (314) 434-0080

CLIENT: DAMES & MOORE
721 EMERSON ROAD, SUITE 220
ST. LOUIS, MO 63141
ATTN: GEORGE JONES

REPORT: 2891301VO(720)

DATE : 02-15-00

SAMPLE MATRIX : SOIL
ATAS # : 28913.01
DATE SUBMITTED: 02-09-00
DATE ANALYZED : 02-10-00

METHOD REF.: SW846-8260B, EPA METHODOLOGY
PROJECT # : 27994-022-045 - PENTAIR
SAMPLE ID : GP-7-4'

RESULTS REPORTED IN ug/Kg OR Parts Per Billion (PPB)

VOLATILES	R.L.	RESULTS	VOLATILES	R.L.	RESULTS
XYLENE (TOTAL)	500	3000	TOLUENE	500	ND
DICHLORODIFLUOROMETHANE	1000	ND	trans-1,3-DICHLOROPROPENE	500	ND
CHLOROMETHANE	1000	ND	1,1,2-TRICHLOROETHANE	500	ND
VINYL CHLORIDE	1000	ND	TETRACHLOROETHENE	500	ND
BROMOMETHANE	1000	ND	1,3-DICHLOROPROPANE	500	ND
CHLOROETHANE	1000	ND	2-HEXANONE	1000	ND
TRICHLOROFLUOROMETHANE	1000	ND	DIBROMOCHLOROMETHANE	500	ND
1,1-DICHLOROETHENE	500	ND	1,2-DIBROMOETHANE	500	ND
ACETONE	1000	ND	CHLOROBENZENE	500	ND
IODOMETHANE	1000	ND	1,1,1,2-TETRACHLOROETHANE	500	ND
CARBON DISULFIDE	500	ND	ETHYLBENZENE	500	1400
METHYLENE CHLORIDE	500	600 B	STYRENE	500	ND
trans-1,2-DICHLOROETHENE	500	ND	BROMOFORM	500	ND
M YYL TERT-BUTYL ETHER	1000	ND	ISOPROPYLBENZENE	500	1600
. DICHLOROETHANE	500	ND	1,1,2,2-TETRACHLOROETHANE	500	ND
VINYL ACETATE	1000	ND	BROMOBENZENE	500	ND
2,2-DICHLOROPROPANE	500	ND	1,2,3-TRICHLOROPROPANE	500	ND
cis-1,2-DICHLOROETHENE	500	ND	n-PROPYLBENZENE	500	3400
2-BUTANONE	1000	ND	2-CHLOROTOLUENE	500	ND
BROMOCHLOROMETHANE	500	ND	1,3,5-TRIMETHYLBENZENE	500	5000
CHLOROFORM	500	ND	4-CHLOROTOLUENE	500	ND
1,1,1-TRICHLOROETHANE	500	ND	TERT-BUTYLBENZENE	500	ND
CARBON TETRACHLORIDE	500	ND	1,2,4-TRIMETHYLBENZENE	500	22000
1,1-DICHLOROPROPENE	500	ND	sec-BUTYLBENZENE	500	3400
BENZENE	500	ND	1,3-DICHLOROBENZENE	500	ND
1,2-DICHLOROETHANE	500	ND	p-ISOPROPYLTOLUENE	500	5000
TRICHLOROETHENE	500	ND	1,4-DICHLOROBENZENE	500	ND
1,2-DICHLOROPROPANE	500	ND	n-BUTYLBENZENE	500	4300
DIBROMOMETHANE	500	ND	1,2-DICHLOROBENZENE	500	ND
BROMODICHLOROMETHANE	500	ND	1,2-DIBROMO-3-CHLOROPROPANE	500	ND
cis-1,3-DICHLOROPROPENE	500	ND	1,2,4-TRICHLOROBENZENE	500	ND
4-METHYL-2-PENTANONE	1000	ND	HEXACHLOROBUTADIENE	500	ND
1,2,3-TRICHLOROBENZENE	500	ND	NAPHTHALENE	500	1200 B

QA/QC SURROGATE RECOVERIES

TOLUENE-d8(81-117) 107% BROMOFLUOROBENZENE(74-121) 96%
1,2-DICHLOROETHANE-D4(70-121) 90%

B = ANALYTE DETECTED IN METHOD BLANK, POSSIBLY BELOW THE REPORTING LIMIT.
J = ESTIMATED VALUE; BELOW REPORTING LIMIT
ND = NOT DETECTED ABOVE REPORTING LIMIT
RL = REPORTING LIMIT; DEFINED AS THE PRACTICAL QUANTITATION LIMIT PLUS ANY DILUTION

ATAS 875 Fee Fee Road • Maryland Heights, MO 63043 • (314) 434-4570 - FAX (314) 434-0080

CLIENT: DAMES & MOORE
721 EMERSON ROAD, SUITE 220
ST. LOUIS, MO 63141
ATTN: GEORGE JONES

REPORT: 2891301VO(720)

DATE : 02-15-00

SAMPLE MATRIX : SOIL
ATAS # : 28913.02
DATE SUBMITTED: 02-09-00
DATE ANALYZED : 02-10-00

METHOD REF.: SW846-8260B, EPA METHODOLOGY
PROJECT # : 27994-022-045 - PENTAIR
SAMPLE ID : GP-7-8'

RESULTS REPORTED IN ug/Kg OR Parts Per Billion (PPB)

VOLATILES	R.L.	RESULTS	VOLATILES	R.L.	RESULTS
XYLENE (TOTAL)	5	6	TOLUENE	5	ND
DICHLORODIFLUOROMETHANE	10	ND	trans-1,3-DICHLOROPROPENE	5	ND
CHLOROMETHANE	10	ND	1,1,2-TRICHLOROETHANE	5	ND
VINYL CHLORIDE	10	ND	TETRACHLOROETHENE	5	ND
BROMOMETHANE	10	ND	1,3-DICHLOROPROPANE	5	ND
CHLOROETHANE	10	ND	2-HEXANONE	10	ND
TRICHLOROFLUOROMETHANE	10	ND	DIBROMOCHLOROMETHANE	5	ND
1,1-DICHLOROETHENE	5	ND	1,2-DIBROMOETHANE	5	ND
ACETONE	10	74	CHLOROBENZENE	5	ND
IODOMETHANE	10	ND	1,1,1,2-TETRACHLOROETHANE	5	ND
CARBON DISULFIDE	5	ND	ETHYLBENZENE	5	ND
METHYLENE CHLORIDE	5	14 B	STYRENE	5	ND
t- s-1,2-DICHLOROETHENE	5	ND	BROMOFORM	5	ND
M ΛL TERT-BUTYL ETHER	10	ND	ISOPROPYLBENZENE	5	6
1,1-DICHLOROETHANE	5	ND	1,1,2,2-TETRACHLOROETHANE	5	ND
VINYL ACETATE	10	ND	BROMOBENZENE	5	ND
2,2-DICHLOROPROPANE	5	ND	1,2,3-TRICHLOROPROPANE	5	ND
cis-1,2-DICHLOROETHENE	5	ND	n-PROPYLBENZENE	5	ND
2-BUTANONE	10	ND	2-CHLOROTOLUENE	5	ND
BROMOCHLOROMETHANE	5	ND	1,3,5-TRIMETHYLBENZENE	5	10
CHLOROFORM	5	ND	4-CHLOROTOLUENE	5	ND
1,1,1-TRICHLOROETHANE	5	ND	TERT-BUTYLBENZENE	5	ND
CARBON TETRACHLORIDE	5	ND	1,2,4-TRIMETHYLBENZENE	5	24
1,1-DICHLOROPROPENE	5	ND	sec-BUTYLBENZENE	5	22
BENZENE	5	ND	1,3-DICHLOROBENZENE	5	ND
1,2-DICHLOROETHANE	5	ND	p-ISOPROPYLTOLUENE	5	ND
TRICHLOROETHENE	5	ND	1,4-DICHLOROBENZENE	5	ND
1,2-DICHLOROPROPANE	5	ND	n-BUTYLBENZENE	5	12
DIBROMOMETHANE	5	ND	1,2-DICHLOROBENZENE	5	ND
BROMODICHLOROMETHANE	5	ND	1,2-DIBROMO-3-CHLOROPROPANE	5	ND
cis-1,3-DICHLOROPROPENE	5	ND	1,2,4-TRICHLOROBENZENE	5	ND
4-METHYL-2-PENTANONE	10	ND	HEXACHLOROBUTADIENE	5	ND
1,2,3-TRICHLOROBENZENE	5	ND	NAPHTHALENE	5	ND

QA/QC SURROGATE RECOVERIES

TOLUENE-d8(81-117) 99% BROMOFLUOROBENZENE(74-121) 103%
1,2-DICHLOROETHANE-D4(70-121) 105%

B = ANALYTE DETECTED IN METHOD BLANK, POSSIBLY BELOW THE REPORTING LIMIT.
ND = NOT DETECTED ABOVE REPORTING LIMIT
RL = REPORTING LIMIT; DEFINED AS THE PRACTICAL QUANTITATION LIMIT PLUS ANY DILUTION, POSITIVE VALUES BELOW THIS LIMIT WERE NOT REPORTED.

ATAS 875 Fee Fee Road • Maryland Heights, MO 63043 • (314) 434-4570 - FAX (314) 434-0080

CLIENT: DAMES & MOORE
721 EMERSON ROAD, SUITE 220
ST. LOUIS, MO 63141
ATTN: GEORGE JONES

REPORT: 2891301VO(720)

DATE : 02-15-00

SAMPLE MATRIX : SOIL
ATAS # : 28913.03
DATE SUBMITTED: 02-09-00
DATE ANALYZED : 02-10-00

METHOD REF.: SW846-8260B, EPA METHODOLOGY
PROJECT # : 27994-022-045 - PENTAIR
SAMPLE ID : GP-8-6'

RESULTS REPORTED IN ug/Kg OR Parts Per Billion (PPB)

VOLATILES	R.L.	RESULTS
XYLENE (TOTAL)	25	ND
DICHLORODIFLUOROMETHANE	50	ND
CHLOROMETHANE	50	ND
VINYL CHLORIDE	50	ND
BROMOMETHANE	50	ND
CHLOROETHANE	50	ND
TRICHLOROFLUOROMETHANE	50	ND
1,1-DICHLOROETHENE	25	ND
ACETONE	50	130
IODOMETHANE	50	ND
CARBON DISULFIDE	25	ND
METHYLENE CHLORIDE	25	88 B
t- 9-1,2-DICHLOROETHENE	25	ND
M. /L TERT-BUTYL ETHER	50	ND
1,1-DICHLOROETHANE	25	ND
VINYL ACETATE	50	ND
2,2-DICHLOROPROPANE	25	ND
cis-1,2-DICHLOROETHENE	25	ND
2-BUTANONE	50	ND
BROMOCHLOROMETHANE	25	ND
CHLOROFORM	25	ND
1,1,1-TRICHLOROETHANE	25	ND
CARBON TETRACHLORIDE	25	ND
1,1-DICHLOROPROPENE	25	ND
BENZENE	25	ND
1,2-DICHLOROETHANE	25	ND
TRICHLOROETHENE	25	ND
1,2-DICHLOROPROPANE	25	ND
DIBROMOMETHANE	25	ND
BROMODICHLOROMETHANE	25	ND
cis-1,3-DICHLOROPROPENE	25	ND
4-METHYL-2-PENTANONE	50	ND
1,2,3-TRICHLOROBENZENE	25	ND

VOLATILES	R.L.	RESULTS
TOLUENE	25	ND
trans-1,3-DICHLOROPROPENE	25	ND
1,1,2-TRICHLOROETHANE	25	ND
TETRACHLOROETHENE	25	ND
1,3-DICHLOROPROPANE	25	ND
2-HEXANONE	50	ND
DIBROMOCHLOROMETHANE	25	ND
1,2-DIBROMOETHANE	25	ND
CHLOROBENZENE	25	ND
1,1,1,2-TETRACHLOROETHANE	25	ND
ETHYLBENZENE	25	ND
STYRENE	25	ND
BROMOFORM	25	ND
ISOPROPYLBENZENE	25	86
1,1,2,2-TETRACHLOROETHANE	25	ND
BROMOBENZENE	25	ND
1,2,3-TRICHLOROPROPANE	25	ND
n-PROPYLBENZENE	25	240
2-CHLOROTOLUENE	25	ND
1,3,5-TRIMETHYLBENZENE	25	ND
4-CHLOROTOLUENE	25	ND
TERT-BUTYLBENZENE	25	ND
1,2,4-TRIMETHYLBENZENE	25	ND
sec-BUTYLBENZENE	25	290
1,3-DICHLOROBENZENE	25	ND
p-ISOPROPYLTOLUENE	25	ND
1,4-DICHLOROBENZENE	25	ND
n-BUTYLBENZENE	25	390
1,2-DICHLOROBENZENE	25	ND
1,2-DIBROMO-3-CHLOROPROPANE	25	ND
1,2,4-TRICHLOROBENZENE	25	ND
HEXACHLOROBUTADIENE	25	ND
NAPHTHALENE	25	ND

QA/QC SURROGATE RECOVERIES

TOLUENE-d8(81-117) 116% BROMOFLUOROBENZENE(74-121) 106%
1,2-DICHLOROETHANE-D4(70-121) 99%

B = ANALYTE DETECTED IN METHOD BLANK, POSSIBLY BELOW THE REPORTING LIMIT.
J = ESTIMATED VALUE; BELOW REPORTING LIMIT
ND = NOT DETECTED ABOVE REPORTING LIMIT
RL = REPORTING LIMIT; DEFINED AS THE PRACTICAL QUANTITATION LIMIT PLUS ANY DILUTION

ATAS 875 Fee Fee Road • Maryland Heights, MO 63043 • (314) 434-4570 - FAX (314) 434-0080

CLIENT: DAMES & MOORE
721 EMERSON ROAD, SUITE 220
ST. LOUIS, MO 63141
ATTN: GEORGE JONES

REPORT: 2891301VO(720)

DATE : 02-15-00

SAMPLE MATRIX : SOIL
ATAS # : 28913.04
DATE SUBMITTED: 02-09-00
DATE ANALYZED : 02-09-00

METHOD REF.: SW846-8260B, EPA METHODOLOGY
PROJECT # : 27994-022 045 - PENTAIR
SAMPLE ID : GP-8-10'

RESULTS REPORTED IN ug/Kg OR Parts Per Billion (PPB)

VOLATILES	R.L.	RESULTS	VOLATILES	R.L.	RESULTS
XYLENE (TOTAL)	5	ND	TOLUENE	5	ND
DICHLORODIFLUOROMETHANE	10	ND	trans-1,3-DICHLOROPROPENE	5	ND
CHLOROMETHANE	10	ND	1,1,2-TRICHLOROETHANE	5	ND
VINYL CHLORIDE	10	ND	TETRACHLOROETHENE	5	ND
BROMOMETHANE	10	ND	1,3-DICHLOROPROPANE	5	ND
CHLOROETHANE	10	ND	2-HEXANONE	10	ND
TRICHLOROFLUOROMETHANE	10	ND	DIBROMOCHLOROMETHANE	5	ND
1,1-DICHLOROETHENE	5	ND	1,2-DIBROMOETHANE	5	ND
ACETONE	10	79	CHLOROBENZENE	5	ND
IODOMETHANE	10	ND	1,1,1,2-TETRACHLOROETHANE	5	ND
CARBON DISULFIDE	5	ND	ETHYLBENZENE	5	ND
METHYLENE CHLORIDE	5	10 B	STYRENE	5	ND
trans-1,2-DICHLOROETHENE	5	ND	BROMOFORM	5	ND
MTBE	10	ND	ISOPROPYLBENZENE	5	ND
1,1-DICHLOROETHANE	5	ND	1,1,2,2-TETRACHLOROETHANE	5	ND
VINYL ACETATE	10	ND	BROMOBENZENE	5	ND
2,2-DICHLOROPROPANE	5	ND	1,2,3-TRICHLOROPROPANE	5	ND
cis-1,2-DICHLOROETHENE	5	ND	n-PROPYLBENZENE	5	ND
2-BUTANONE	10	ND	2-CHLOROTOLUENE	5	ND
BROMOCHLOROMETHANE	5	ND	1,3,5-TRIMETHYLBENZENE	5	ND
CHLOROFORM	5	ND	4-CHLOROTOLUENE	5	ND
1,1,1-TRICHLOROETHANE	5	ND	TERT-BUTYLBENZENE	5	ND
CARBON TETRACHLORIDE	5	ND	1,2,4-TRIMETHYLBENZENE	5	ND
1,1-DICHLOROPROPENE	5	ND	sec-BUTYLBENZENE	5	ND
BENZENE	5	ND	1,3-DICHLOROBENZENE	5	ND
1,2-DICHLOROETHANE	5	ND	p-ISOPROPYLTOLUENE	5	ND
TRICHLOROETHENE	5	ND	1,4-DICHLOROBENZENE	5	ND
1,2-DICHLOROPROPANE	5	ND	n-BUTYLBENZENE	5	ND
DIBROMOMETHANE	5	ND	1,2-DICHLOROBENZENE	5	ND
BROMODICHLOROMETHANE	5	ND	1,2-DIBROMO-3-CHLOROPROPANE	5	ND
cis-1,3-DICHLOROPROPENE	5	ND	1,2,4-TRICHLOROBENZENE	5	ND
4-METHYL-2-PENTANONE	10	ND	HEXACHLOROBUTADIENE	5	ND
1,2,3-TRICHLOROBENZENE	5	ND	NAPHTHALENE	5	ND

QA/QC SURROGATE RECOVERIES

TOLUENE-d8(81-117) 109% BROMOFLUOROBENZENE(74-121) 105%
1,2-DICHLOROETHANE-D4(70-121) 101%

B = ANALYTE DETECTED IN METHOD BLANK, POSSIBLY BELOW THE REPORTING LIMIT.
ND = NOT DETECTED ABOVE REPORTING LIMIT
RL = REPORTING LIMIT; DEFINED AS THE PRACTICAL QUANTITATION LIMIT PLUS ANY DILUTION, POSITIVE VALUES BELOW THIS LIMIT WERE NOT REPORTED.

ATAS 875 Fee Fee Road • Maryland Heights, MO 63043 • (314) 434-4570 - FAX (314) 434-0080

CLIENT: DAMES & MOORE
721 EMERSON ROAD, SUITE 220
ST. LOUIS, MO 63141
ATTN: GEORGE JONES

REPORT: 2891301VO(720)

DATE : 02-15-00

SAMPLE MATRIX : SOIL
ATAS # : 28913.05
DATE SUBMITTED: 02-09-00
DATE ANALYZED : 02-09-00

METHOD REF.: SW846-8260B, EPA METHODOLOGY
PROJECT # : 27994-022-045 - PENTAIR
SAMPLE ID : GP-9-4'

RESULTS REPORTED IN ug/Kg OR Parts Per Billion (PPB)

VOLATILES	R.L.	RESULTS	VOLATILES	R.L.	RESULTS
XYLENE (TOTAL)	5	ND	TOLUENE	5	ND
DICHLORODIFLUOROMETHANE	10	ND	trans-1,3-DICHLOROPROPENE	5	ND
CHLOROMETHANE	10	ND	1,1,2-TRICHLOROETHANE	5	ND
VINYL CHLORIDE	10	ND	TETRACHLOROETHENE	5	ND
BROMOMETHANE	10	ND	1,3-DICHLOROPROPANE	5	ND
CHLOROETHANE	10	ND	2-HEXANONE	10	ND
TRICHLOROFLUOROMETHANE	10	ND	DIBROMOCHLOROMETHANE	5	ND
1,1-DICHLOROETHENE	5	ND	1,2-DIBROMOETHANE	5	ND
ACETONE	10	56	CHLOROBENZENE	5	ND
IODOMETHANE	10	ND	1,1,1,2-TETRACHLOROETHANE	5	ND
CARBON DISULFIDE	5	ND	ETHYLBENZENE	5	ND
METHYLENE CHLORIDE	5	10 B	STYRENE	5	ND
trans-1,2-DICHLOROETHENE	5	ND	BROMOFORM	5	ND
[illegible]YL TERT-BUTYL ETHER	10	ND	ISOPROPYLBENZENE	5	ND
1,1-DICHLOROETHANE	5	ND	1,1,2,2-TETRACHLOROETHANE	5	ND
VINYL ACETATE	10	ND	BROMOBENZENE	5	ND
2,2-DICHLOROPROPANE	5	ND	1,2,3-TRICHLOROPROPANE	5	ND
cis-1,2-DICHLOROETHENE	5	ND	n-PROPYLBENZENE	5	ND
2-BUTANONE	10	ND	2-CHLOROTOLUENE	5	ND
BROMOCHLOROMETHANE	5	ND	1,3,5-TRIMETHYLBENZENE	5	ND
CHLOROFORM	5	ND	4-CHLOROTOLUENE	5	ND
1,1,1-TRICHLOROETHANE	5	ND	TERT-BUTYLBENZENE	5	ND
CARBON TETRACHLORIDE	5	ND	1,2,4-TRIMETHYLBENZENE	5	ND
1,1-DICHLOROPROPENE	5	ND	sec-BUTYLBENZENE	5	ND
BENZENE	5	ND	1,3-DICHLOROBENZENE	5	ND
1,2-DICHLOROETHANE	5	ND	p-ISOPROPYLTOLUENE	5	ND
TRICHLOROETHENE	5	ND	1,4-DICHLOROBENZENE	5	ND
1,2-DICHLOROPROPANE	5	ND	n-BUTYLBENZENE	5	ND
DIBROMOMETHANE	5	ND	1,2-DICHLOROBENZENE	5	ND
BROMODICHLOROMETHANE	5	ND	1,2-DIBROMO-3-CHLOROPROPANE	5	ND
cis-1,3-DICHLOROPROPENE	5	ND	1,2,4-TRICHLOROBENZENE	5	ND
4-METHYL-2-PENTANONE	10	ND	HEXACHLOROBUTADIENE	5	ND
1,2,3-TRICHLOROBENZENE	5	ND	NAPHTHALENE	5	ND

QA/QC SURROGATE RECOVERIES

TOLUENE-d8(81-117) 103% BROMOFLUOROBENZENE(74-121) 103%
1,2-DICHLOROETHANE-D4(70-121) 100%

B = ANALYTE DETECTED IN METHOD BLANK, POSSIBLY BELOW THE REPORTING LIMIT.
ND = NOT DETECTED ABOVE REPORTING LIMIT
RL = REPORTING LIMIT; DEFINED AS THE PRACTICAL QUANTITATION LIMIT PLUS ANY DILUTION, POSITIVE VALUES BELOW THIS LIMIT WERE NOT REPORTED.

ATAS 875 Fee Fee Road • Maryland Heights, MO 63043 • (314) 434-4570 - FAX (314) 434-0080

REPORT: 2891301VO(720)

CLIENT: DAMES & MOORE
721 EMERSON ROAD, SUITE 220
ST. LOUIS, MO 63141
ATTN: GEORGE JONES

DATE : 02-15-00

SAMPLE MATRIX : SOIL
ATAS # : 28913.06
DATE SUBMITTED: 02-09-00
DATE ANALYZED : 02-09-00

METHOD REF.: SW846-8260B, EPA METHODOLOGY
PROJECT # : 27994-022-045 - PENTAIR
SAMPLE ID : GP-9-7'

RESULTS REPORTED IN ug/Kg OR Parts Per Billion (PPB)

VOLATILES	R.L.	RESULTS
XYLENE (TOTAL)	5	ND
DICHLORODIFLUOROMETHANE	10	ND
CHLOROMETHANE	10	ND
VINYL CHLORIDE	10	ND
BROMOMETHANE	10	ND
CHLOROETHANE	10	ND
TRICHLOROFLUOROMETHANE	10	ND
1,1-DICHLOROETHENE	5	ND
ACETONE	10	19
IODOMETHANE	10	ND
CARBON DISULFIDE	5	ND
METHYLENE CHLORIDE	5	10 B
trans-1,2-DICHLOROETHENE	5	ND
ETHYL TERT-BUTYL ETHER	10	ND
1,1-DICHLOROETHANE	5	ND
VINYL ACETATE	10	ND
2,2-DICHLOROPROPANE	5	ND
cis-1,2-DICHLOROETHENE	5	ND
2-BUTANONE	10	ND
BROMOCHLOROMETHANE	5	ND
CHLOROFORM	5	ND
1,1,1-TRICHLOROETHANE	5	ND
CARBON TETRACHLORIDE	5	ND
1,1-DICHLOROPROPENE	5	ND
BENZENE	5	ND
1,2-DICHLOROETHANE	5	ND
TRICHLOROETHENE	5	ND
1,2-DICHLOROPROPANE	5	ND
DIBROMOMETHANE	5	ND
BROMODICHLOROMETHANE	5	ND
cis-1,3-DICHLOROPROPENE	5	ND
4-METHYL-2-PENTANONE	10	ND
1,2,3-TRICHLOROBENZENE	5	ND

VOLATILES	R.L.	RESULTS
TOLUENE	5	ND
trans-1,3-DICHLOROPROPENE	5	ND
1,1,2-TRICHLOROETHANE	5	ND
TETRACHLOROETHENE	5	ND
1,3-DICHLOROPROPANE	5	ND
2-HEXANONE	10	ND
DIBROMOCHLOROMETHANE	5	ND
1,2-DIBROMOETHANE	5	ND
CHLOROBENZENE	5	ND
1,1,1,2-TETRACHLOROETHANE	5	ND
ETHYLBENZENE	5	ND
STYRENE	5	ND
BROMOFORM	5	ND
ISOPROPYLBENZENE	5	ND
1,1,2,2-TETRACHLOROETHANE	5	ND
BROMOBENZENE	5	ND
1,2,3-TRICHLOROPROPANE	5	ND
n-PROPYLBENZENE	5	ND
2-CHLOROTOLUENE	5	ND
1,3,5-TRIMETHYLBENZENE	5	ND
4-CHLOROTOLUENE	5	ND
TERT-BUTYLBENZENE	5	ND
1,2,4-TRIMETHYLBENZENE	5	ND
sec-BUTYLBENZENE	5	ND
1,3-DICHLOROBENZENE	5	ND
p-ISOPROPYLTOLUENE	5	ND
1,4-DICHLOROBENZENE	5	ND
n-BUTYLBENZENE	5	ND
1,2-DICHLOROBENZENE	5	ND
1,2-DIBROMO-3-CHLOROPROPANE	5	ND
1,2,4-TRICHLOROBENZENE	5	ND
HEXACHLOROBUTADIENE	5	ND
NAPHTHALENE	5	ND

QA/QC SURROGATE RECOVERIES

TOLUENE-d8(81-117) 104% BROMOFLUOROBENZENE(74-121) 108%
1,2-DICHLOROETHANE-D4(70-121) 102%

B = ANALYTE DETECTED IN METHOD BLANK, POSSIBLY BELOW THE REPORTING LIMIT.
ND = NOT DETECTED ABOVE REPORTING LIMIT
RL = REPORTING LIMIT; DEFINED AS THE PRACTICAL QUANTITATION LIMIT PLUS ANY DILUTION, POSITIVE VALUES BELOW THIS LIMIT WERE NOT REPORTED.

ATAS 875 Fee Fee Road • Maryland Heights, MO 63043 • (314) 434-4570 - FAX (314) 434-0080

REPORT: 2891301VO(720)

DATE : 02-15-00

CLIENT: DAMES & MOORE
721 EMERSON ROAD, SUITE 220
ST. LOUIS, MO 63141
ATTN: GEORGE JONES

SAMPLE MATRIX : SOIL
ATAS # : 28913.07
DATE SUBMITTED: 02-09-00
DATE ANALYZED : 02-10-00

METHOD REF.: SW846-8260B, EPA METHODOLOGY
PROJECT # : 27994-022-045 - PENTAIR
SAMPLE ID : GP-10-4'

RESULTS REPORTED IN ug/Kg OR Parts Per Billion (PPB)

VOLATILES	R.L.	RESULTS
XYLENE (TOTAL)	500	ND
DICHLORODIFLUOROMETHANE	1000	ND
CHLOROMETHANE	1000	ND
VINYL CHLORIDE	1000	ND
BROMOMETHANE	1000	ND
CHLOROETHANE	1000	ND
TRICHLOROFLUOROMETHANE	1000	ND
1,1-DICHLOROETHENE	500	ND
ACETONE	1000	ND
IODOMETHANE	1000	ND
CARBON DISULFIDE	500	ND
METHYLENE CHLORIDE	500	1400 B
t: -1,2-DICHLOROETHENE	500	ND
ME L TERT-BUTYL ETHER	1000	ND
1,1-DICHLOROETHANE	500	ND
VINYL ACETATE	1000	ND
2,2-DICHLOROPROPANE	500	ND
cis-1,2-DICHLOROETHENE	500	ND
2-BUTANONE	1000	ND
BROMOCHLOROMETHANE	500	ND
CHLOROFORM	500	ND
1,1,1-TRICHLOROETHANE	500	ND
CARBON TETRACHLORIDE	500	ND
1,1-DICHLOROPROPENE	500	ND
BENZENE	500	ND
1,2-DICHLOROETHANE	500	ND
TRICHLOROETHENE	500	ND
1,2-DICHLOROPROPANE	500	ND
DIBROMOMETHANE	500	ND
BROMODICHLOROMETHANE	500	ND
cis-1,3-DICHLOROPROPENE	500	ND
4-METHYL-2-PENTANONE	1000	ND
1,2,3-TRICHLOROBENZENE	500	ND

VOLATILES	R.L.	RESULTS
TOLUENE	500	ND
trans-1,3-DICHLOROPROPENE	500	ND
1,1,2-TRICHLOROETHANE	500	ND
TETRACHLOROETHENE	500	ND
1,3-DICHLOROPROPANE	500	ND
2-HEXANONE	1000	ND
DIBROMOCHLOROMETHANE	500	ND
1,2-DIBROMOETHANE	500	ND
CHLOROBENZENE	500	ND
1,1,1,2-TETRACHLOROETHANE	500	ND
ETHYLBENZENE	500	ND
STYRENE	500	ND
BROMOFORM	500	ND
ISOPROPYLBENZENE	500	ND
1,1,2,2-TETRACHLOROETHANE	500	ND
BROMOBENZENE	500	ND
1,2,3-TRICHLOROPROPANE	500	ND
n-PROPYLBENZENE	500	ND
2-CHLOROTOLUENE	500	ND
1,3,5-TRIMETHYLBENZENE	500	ND
4-CHLOROTOLUENE	500	ND
TERT-BUTYLBENZENE	500	ND
1,2,4-TRIMETHYLBENZENE	500	ND
sec-BUTYLBENZENE	500	200 J
1,3-DICHLOROBENZENE	500	ND
p-ISOPROPYLTOLUENE	500	ND
1,4-DICHLOROBENZENE	500	ND
n-BUTYLBENZENE	500	250 J
1,2-DICHLOROBENZENE	500	ND
1,2-DIBROMO-3-CHLOROPROPANE	500	ND
1,2,4-TRICHLOROBENZENE	500	ND
HEXACHLOROBUTADIENE	500	ND
NAPHTHALENE	500	ND

QA/QC SURROGATE RECOVERIES

TOLUENE-d8(81-117) 99% BROMOFLUOROBENZENE(74-121) 103%
1,2-DICHLOROETHANE-D4(70-121) 99%

B = ANALYTE DETECTED IN METHOD BLANK, POSSIBLY BELOW THE REPORTING LIMIT.
J = ESTIMATED VALUE; BELOW REPORTING LIMIT
ND = NOT DETECTED ABOVE REPORTING LIMIT
RL = REPORTING LIMIT; DEFINED AS THE PRACTICAL QUANTITATION LIMIT PLUS ANY DILUTION

ATAS 875 Fee Fee Road • Maryland Heights, MO 63043 • (314) 434-4570 - FAX (314) 434-0080

CLIENT: DAMES & MOORE
721 EMERSON ROAD, SUITE 220
ST. LOUIS, MO 63141
ATTN: GEORGE JONES

REPORT: 2891301VO(720)

DATE : 02-15-00

SAMPLE MATRIX : SOIL
ATAS # : 28913.08
DATE SUBMITTED: 02-09-00
DATE ANALYZED : 02-10-00

METHOD REF.: SW846-8260B, EPA METHODOLOGY
PROJECT # : 27994-022-045 - PENTAIR
SAMPLE ID : GP-10-10'

RESULTS REPORTED IN ug/Kg OR Parts Per Billion (PPB)

VOLATILES	R.L.	RESULTS	VOLATILES	R.L.	RESULTS
XYLENE (TOTAL)	5	ND	TOLUENE	5	ND
DICHLORODIFLUOROMETHANE	10	ND	trans-1,3-DICHLOROPROPENE	5	ND
CHLOROMETHANE	10	ND	1,1,2-TRICHLOROETHANE	5	ND
VINYL CHLORIDE	10	ND	TETRACHLOROETHENE	5	ND
BROMOMETHANE	10	ND	1,3-DICHLOROPROPANE	5	ND
CHLOROETHANE	10	ND	2-HEXANONE	10	ND
TRICHLOROFLUOROMETHANE	10	ND	DIBROMOCHLOROMETHANE	5	ND
1,1-DICHLOROETHENE	5	ND	1,2-DIBROMOETHANE	5	ND
ACETONE	10	27	CHLOROBENZENE	5	ND
IODOMETHANE	10	ND	1,1,1,2-TETRACHLOROETHANE	5	ND
CARBON DISULFIDE	5	ND	ETHYLBENZENE	5	ND
METHYLENE CHLORIDE	5	8 B	STYRENE	5	ND
t s-1,2-DICHLOROETHENE	5	ND	BROMOFORM	5	ND
M. .YL TERT-BUTYL ETHER	10	ND	ISOPROPYLBENZENE	5	ND
1,1-DICHLOROETHANE	5	ND	1,1,2,2-TETRACHLOROETHANE	5	ND
VINYL ACETATE	10	ND	BROMOBENZENE	5	ND
2,2-DICHLOROPROPANE	5	ND	1,2,3-TRICHLOROPROPANE	5	ND
cis-1,2-DICHLOROETHENE	5	ND	n-PROPYLBENZENE	5	ND
2-BUTANONE	10	ND	2-CHLOROTOLUENE	5	ND
BROMOCHLOROMETHANE	5	ND	1,3,5-TRIMETHYLBENZENE	5	ND
CHLOROFORM	5	ND	4-CHLOROTOLUENE	5	ND
1,1,1-TRICHLOROETHANE	5	ND	TERT-BUTYLBENZENE	5	ND
CARBON TETRACHLORIDE	5	ND	1,2,4-TRIMETHYLBENZENE	5	ND
1,1-DICHLOROPROPENE	5	ND	sec-BUTYLBENZENE	5	ND
BENZENE	5	ND	1,3-DICHLOROBENZENE	5	ND
1,2-DICHLOROETHANE	5	ND	p-ISOPROPYLTOLUENE	5	ND
TRICHLOROETHENE	5	ND	1,4-DICHLOROBENZENE	5	ND
1,2-DICHLOROPROPANE	5	ND	n-BUTYLBENZENE	5	ND
DIBROMOMETHANE	5	ND	1,2-DICHLOROBENZENE	5	ND
BROMODICHLOROMETHANE	5	ND	1,2-DIBROMO-3-CHLOROPROPANE	5	ND
cis-1,3-DICHLOROPROPENE	5	ND	1,2,4-TRICHLOROBENZENE	5	ND
4-METHYL-2-PENTANONE	10	ND	HEXACHLOROBUTADIENE	5	ND
1,2,3-TRICHLOROBENZENE	5	ND	NAPHTHALENE	5	ND

QA/QC SURROGATE RECOVERIES

TOLUENE-d8(81-117) 104% BROMOFLUOROBENZENE(74-121) 111%
1,2-DICHLOROETHANE-D4(70-121) 100%

B = ANALYTE DETECTED IN METHOD BLANK, POSSIBLY BELOW THE REPORTING LIMIT.
ND = NOT DETECTED ABOVE REPORTING LIMIT
RL = REPORTING LIMIT; DEFINED AS THE PRACTICAL QUANTITATION LIMIT PLUS ANY DILUTION, POSITIVE VALUES BELOW THIS LIMIT WERE NOT REPORTED.

ATAS 875 Fee Fee Road • Maryland Heights, MO 63043 • (314) 434-4570 - FAX (314) 434-0080

CLIENT: DAMES & MOORE
721 EMERSON ROAD, SUITE 220
ST. LOUIS, MO 63141
ATTN: GEORGE JONES

REPORT: 2891301VO(720)

DATE : 02-15-00

SAMPLE MATRIX : SOIL
ATAS # : 28913.09
DATE SUBMITTED: 02-09-00
DATE ANALYZED : 02-11-00

METHOD REF.: SW846-8260B, EPA METHODOLOGY
PROJECT # : 27994-022-045 - PENTAIR
SAMPLE ID : GP-11-4'

RESULTS REPORTED IN ug/Kg OR Parts Per Billion (PPB)

VOLATILES	R.L.	RESULTS	VOLATILES	R.L.	RESULTS
XYLENE (TOTAL)	5000	ND	TOLUENE	5000	ND
DICHLORODIFLUOROMETHANE	10000	ND	trans-1,3-DICHLOROPROPENE	5000	ND
CHLOROMETHANE	10000	ND	1,1,2-TRICHLOROETHANE	5000	ND
VINYL CHLORIDE	10000	ND	TETRACHLOROETHENE	5000	ND
BROMOMETHANE	10000	ND	1,3-DICHLOROPROPANE	5000	ND
CHLOROETHANE	10000	ND	2-HEXANONE	10000	ND
TRICHLOROFLUOROMETHANE	10000	ND	DIBROMOCHLOROMETHANE	5000	ND
1,1-DICHLOROETHENE	5000	ND	1,2-DIBROMOETHANE	5000	ND
ACETONE	10000	ND	CHLOROBENZENE	5000	ND
IODOMETHANE	10000	ND	1,1,1,2-TETRACHLOROETHANE	5000	ND
CARBON DISULFIDE	5000	ND	ETHYLBENZENE	5000	ND
METHYLENE CHLORIDE	5000	2800 J B	STYRENE	5000	ND
trans-1,2-DICHLOROETHENE	5000	ND	BROMOFORM	5000	ND
M YL TERT-BUTYL ETHER	10000	ND	ISOPROPYLBENZENE	5000	1800 J
1 DICHLOROETHANE	5000	ND	1,1,2,2-TETRACHLOROETHANE	5000	ND
VINYL ACETATE	10000	ND	BROMOBENZENE	5000	ND
2,2-DICHLOROPROPANE	5000	ND	1,2,3-TRICHLOROPROPANE	5000	ND
cis-1,2-DICHLOROETHENE	5000	30000	n-PROPYLBENZENE	5000	3000 J
2-BUTANONE	10000	ND	2-CHLOROTOLUENE	5000	ND
BROMOCHLOROMETHANE	5000	ND	1,3,5-TRIMETHYLBENZENE	5000	3800 J
CHLOROFORM	5000	ND	4-CHLOROTOLUENE	5000	ND
1,1,1-TRICHLOROETHANE	5000	ND	TERT-BUTYLBENZENE	5000	ND
CARBON TETRACHLORIDE	5000	ND	1,2,4-TRIMETHYLBENZENE	5000	3500 J
1,1-DICHLOROPROPENE	5000	ND	sec-BUTYLBENZENE	5000	3600 J
BENZENE	5000	ND	1,3-DICHLOROBENZENE	5000	ND
1,2-DICHLOROETHANE	5000	ND	p-ISOPROPYLTOLUENE	5000	ND
TRICHLOROETHENE	5000	55000	1,4-DICHLOROBENZENE	5000	ND
1,2-DICHLOROPROPANE	5000	ND	n-BUTYLBENZENE	5000	4700 J
DIBROMOMETHANE	5000	ND	1,2-DICHLOROBENZENE	5000	ND
BROMODICHLOROMETHANE	5000	ND	1,2-DIBROMO-3-CHLOROPROPANE	5000	ND
cis-1,3-DICHLOROPROPENE	5000	ND	1,2,4-TRICHLOROBENZENE	5000	ND
4-METHYL-2-PENTANONE	10000	ND	HEXACHLOROBUTADIENE	5000	ND
1,2,3-TRICHLOROBENZENE	5000	ND	NAPHTHALENE	5000	ND

QA/QC SURROGATE RECOVERIES

TOLUENE-d8(81-117) 106% BROMOFLUOROBENZENE(74-121) 114%
1,2-DICHLOROETHANE-D4(70-121) 90%

B = ANALYTE DETECTED IN METHOD BLANK, POSSIBLY BELOW THE REPORTING LIMIT.
J = ESTIMATED VALUE; BELOW REPORTING LIMIT
ND = NOT DETECTED ABOVE REPORTING LIMIT
RL = REPORTING LIMIT; DEFINED AS THE PRACTICAL QUANTITATION LIMIT PLUS ANY DILUTION

ATAS 875 Fee Fee Road • Maryland Heights, MO 63043 • (314) 434-4570 - FAX (314) 434-0080

CLIENT: DAMES & MOORE
721 EMERSON ROAD, SUITE 220
ST. LOUIS, MO 63141
ATTN: GEORGE JONES

REPORT: 2891301VO(720)

DATE : 02-15-00

SAMPLE MATRIX : SOIL
ATAS # : 28913.10
DATE SUBMITTED: 02-09-00
DATE ANALYZED : 02-11-00

METHOD REF.: SW846-8260B, EPA METHODOLOGY
PROJECT # : 27994-022-045 - PENTAIR
SAMPLE ID : GP-11-14'

RESULTS REPORTED IN ug/Kg OR Parts Per Billion (PPB)

VOLATILES	R.L.	RESULTS	VOLATILES	R.L.	RESULTS
XYLENE (TOTAL)	500	ND	TOLUENE	500	ND
DICHLORODIFLUOROMETHANE	1000	ND	trans-1,3-DICHLOROPROPENE	500	ND
CHLOROMETHANE	1000	ND	1,1,2-TRICHLOROETHANE	500	ND
VINYL CHLORIDE	1000	ND	TETRACHLOROETHENE	500	ND
BROMOMETHANE	1000	ND	1,3-DICHLOROPROPANE	500	ND
CHLOROETHANE	1000	ND	2-HEXANONE	1000	ND
TRICHLOROFLUOROMETHANE	1000	ND	DIBROMOCHLOROMETHANE	500	ND
1,1-DICHLOROETHENE	500	ND	1,2-DIBROMOETHANE	500	ND
ACETONE	1000	ND	CHLOROBENZENE	500	ND
IODOMETHANE	1000	ND	1,1,1,2-TETRACHLOROETHANE	500	ND
CARBON DISULFIDE	500	ND	ETHYLBENZENE	500	ND
METHYLENE CHLORIDE	500	700 B	STYRENE	500	ND
trans-1,2-DICHLOROETHENE	500	ND	BROMOFORM	500	ND
TYL TERT-BUTYL ETHER	1000	ND	ISOPROPYLBENZENE	500	ND
1,1-DICHLOROETHANE	500	ND	1,1,2,2-TETRACHLOROETHANE	500	ND
VINYL ACETATE	1000	ND	BROMOBENZENE	500	ND
2,2-DICHLOROPROPANE	500	ND	1,2,3-TRICHLOROPROPANE	500	ND
cis-1,2-DICHLOROETHENE	500	770	n-PROPYLBENZENE	500	ND
2-BUTANONE	1000	ND	2-CHLOROTOLUENE	500	ND
BROMOCHLOROMETHANE	500	ND	1,3,5-TRIMETHYLBENZENE	500	330 J
CHLOROFORM	500	ND	4-CHLOROTOLUENE	500	ND
1,1,1-TRICHLOROETHANE	500	ND	TERT-BUTYLBENZENE	500	ND
CARBON TETRACHLORIDE	500	ND	1,2,4-TRIMETHYLBENZENE	500	900
1,1-DICHLOROPROPENE	500	ND	sec-BUTYLBENZENE	500	170 J
BENZENE	500	ND	1,3-DICHLOROBENZENE	500	ND
1,2-DICHLOROETHANE	500	ND	p-ISOPROPYLTOLUENE	500	ND
TRICHLOROETHENE	500	19000	1,4-DICHLOROBENZENE	500	ND
1,2-DICHLOROPROPANE	500	ND	n-BUTYLBENZENE	500	250 J
DIBROMOMETHANE	500	ND	1,2-DICHLOROBENZENE	500	ND
BROMODICHLOROMETHANE	500	ND	1,2-DIBROMO-3-CHLOROPROPANE	500	ND
cis-1,3-DICHLOROPROPENE	500	ND	1,2,4-TRICHLOROBENZENE	500	ND
4-METHYL-2-PENTANONE	1000	ND	HEXACHLOROBUTADIENE	500	ND
1,2,3-TRICHLOROBENZENE	500	ND	NAPHTHALENE	500	ND

QA/QC SURROGATE RECOVERIES

TOLUENE-d8(81-117) 99% BROMOFLUOROBENZENE(74-121) 105%
1,2-DICHLOROETHANE-D4(70-121) 94%

B = ANALYTE DETECTED IN METHOD BLANK, POSSIBLY BELOW THE REPORTING LIMIT.
J = ESTIMATED VALUE; BELOW REPORTING LIMIT
ND = NOT DETECTED ABOVE REPORTING LIMIT
RL = REPORTING LIMIT; DEFINED AS THE PRACTICAL QUANTITATION LIMIT PLUS ANY DILUTION

ATAS 875 Fee Fee Road • Maryland Heights, MO 63043 • (314) 434-4570 - FAX (314) 434-0080

REPORT: 2891301VO(720)

DATE : 02-15-00

CLIENT: DAMES & MOORE
721 EMERSON ROAD, SUITE 220
ST. LOUIS, MO 63141
ATTN: GEORGE JONES

SAMPLE MATRIX : SOIL
ATAS # : 28913.11
DATE SUBMITTED: 02-09-00
DATE ANALYZED : 02-11-00

METHOD REF.: SW846-8260B, EPA METHODOLOGY
PROJECT # : 27994-022-045 - PENTAIR
SAMPLE ID : GP-12-4'

RESULTS REPORTED IN ug/Kg OR Parts Per Billion (PPB)

VOLATILES	R.L.	RESULTS
XYLENE (TOTAL)	500	ND
DICHLORODIFLUOROMETHANE	1000	ND
CHLOROMETHANE	1000	ND
VINYL CHLORIDE	1000	ND
BROMOMETHANE	1000	ND
CHLOROETHANE	1000	ND
TRICHLOROFLUOROMETHANE	1000	ND
1,1-DICHLOROETHENE	500	ND
ACETONE	1000	ND
IODOMETHANE	1000	ND
CARBON DISULFIDE	500	ND
METHYLENE CHLORIDE	500	600 B
t s-1,2-DICHLOROETHENE	500	ND
M..YL TERT-BUTYL ETHER	1000	ND
1,1-DICHLOROETHANE	500	ND
VINYL ACETATE	1000	ND
2,2-DICHLOROPROPANE	500	ND
cis-1,2-DICHLOROETHENE	500	ND
2-BUTANONE	1000	ND
BROMOCHLOROMETHANE	500	ND
CHLOROFORM	500	ND
1,1,1-TRICHLOROETHANE	500	ND
CARBON TETRACHLORIDE	500	ND
1,1-DICHLOROPROPENE	500	ND
BENZENE	500	160 J
1,2-DICHLOROETHANE	500	ND
TRICHLOROETHENE	500	ND
1,2-DICHLOROPROPANE	500	ND
DIBROMOMETHANE	500	ND
BROMODICHLOROMETHANE	500	ND
cis-1,3-DICHLOROPROPENE	500	ND
4-METHYL-2-PENTANONE	1000	ND
1,2,3-TRICHLOROBENZENE	500	ND

VOLATILES	R.L.	RESULTS
TOLUENE	500	ND
trans-1,3-DICHLOROPROPENE	500	ND
1,1,2-TRICHLOROETHANE	500	ND
TETRACHLOROETHENE	500	ND
1,3-DICHLOROPROPANE	500	ND
2-HEXANONE	1000	ND
DIBROMOCHLOROMETHANE	500	ND
1,2-DIBROMOETHANE	500	ND
CHLOROBENZENE	500	ND
1,1,1,2-TETRACHLOROETHANE	500	ND
ETHYLBENZENE	500	ND
STYRENE	500	ND
BROMOFORM	500	ND
ISOPROPYLBENZENE	500	210 J
1,1,2,2-TETRACHLOROETHANE	500	ND
BROMOBENZENE	500	ND
1,2,3-TRICHLOROPROPANE	500	ND
n-PROPYLBENZENE	500	ND
2-CHLOROTOLUENE	500	ND
1,3,5-TRIMETHYLBENZENE	500	ND
4-CHLOROTOLUENE	500	ND
TERT-BUTYLBENZENE	500	ND
1,2,4-TRIMETHYLBENZENE	500	ND
sec-BUTYLBENZENE	500	450 J
1,3-DICHLOROBENZENE	500	ND
p-ISOPROPYLTOLUENE	500	ND
1,4-DICHLOROBENZENE	500	ND
n-BUTYLBENZENE	500	460 J
1,2-DICHLOROBENZENE	500	ND
1,2-DIBROMO-3-CHLOROPROPANE	500	ND
1,2,4-TRICHLOROBENZENE	500	ND
HEXACHLOROBUTADIENE	500	ND
NAPHTHALENE	500	ND

QA/QC SURROGATE RECOVERIES

TOLUENE-d8(81-117) 106% BROMOFLUOROBENZENE(74-121) 108%
1,2-DICHLOROETHANE-D4(70-121) 97%

B = ANALYTE DETECTED IN METHOD BLANK, POSSIBLY BELOW THE REPORTING LIMIT.
J = ESTIMATED VALUE; BELOW REPORTING LIMIT
ND = NOT DETECTED ABOVE REPORTING LIMIT
RL = REPORTING LIMIT; DEFINED AS THE PRACTICAL QUANTITATION LIMIT PLUS ANY DILUTION

ATAS 875 Fee Fee Road • Maryland Heights, MO 63043 • (314) 434-4570 - FAX (314) 434-0080

REPORT: 2891301VO(720)

CLIENT: DAMES & MOORE
721 EMERSON ROAD, SUITE 220
ST. LOUIS, MO 63141
ATTN: GEORGE JONES

DATE : 02-15-00

SAMPLE MATRIX : SOIL
ATAS # : 28913.12
DATE SUBMITTED: 02-09-00
DATE ANALYZED : 02-11-00

METHOD REF.: SW846-8260B, EPA METHODOLOGY
PROJECT # : 27994-022-045 - PENTAIR
SAMPLE ID : GP-12-14'

RESULTS REPORTED IN ug/Kg OR Parts Per Billion (PPB)

VOLATILES	R.L.	RESULTS
XYLENE (TOTAL)	500	ND
DICHLORODIFLUOROMETHANE	1000	ND
CHLOROMETHANE	1000	ND
VINYL CHLORIDE	1000	ND
BROMOMETHANE	1000	ND
CHLOROETHANE	1000	ND
TRICHLOROFLUOROMETHANE	1000	ND
1,1-DICHLOROETHENE	500	ND
ACETONE	1000	ND
IODOMETHANE	1000	ND
CARBON DISULFIDE	500	ND
METHYLENE CHLORIDE	500	530 B
t[illegible]s-1,2-DICHLOROETHENE	500	ND
[illegible]YL TERT-BUTYL ETHER	1000	ND
1,1-DICHLOROETHANE	500	ND
VINYL ACETATE	1000	ND
2,2-DICHLOROPROPANE	500	ND
cis-1,2-DICHLOROETHENE	500	280 J
2-BUTANONE	1000	ND
BROMOCHLOROMETHANE	500	ND
CHLOROFORM	500	ND
1,1,1-TRICHLOROETHANE	500	ND
CARBON TETRACHLORIDE	500	ND
1,1-DICHLOROPROPENE	500	ND
BENZENE	500	ND
1,2-DICHLOROETHANE	500	ND
TRICHLOROETHENE	500	2600
1,2-DICHLOROPROPANE	500	ND
DIBROMOMETHANE	500	ND
BROMODICHLOROMETHANE	500	ND
cis-1,3-DICHLOROPROPENE	500	ND
4-METHYL-2-PENTANONE	1000	ND
1,2,3-TRICHLOROBENZENE	500	ND

VOLATILES	R.L.	RESULTS
TOLUENE	500	ND
trans-1,3-DICHLOROPROPENE	500	ND
1,1,2-TRICHLOROETHANE	500	ND
TETRACHLOROETHENE	500	ND
1,3-DICHLOROPROPANE	500	ND
2-HEXANONE	1000	ND
DIBROMOCHLOROMETHANE	500	ND
1,2-DIBROMOETHANE	500	ND
CHLOROBENZENE	500	ND
1,1,1,2-TETRACHLOROETHANE	500	ND
ETHYLBENZENE	500	ND
STYRENE	500	ND
BROMOFORM	500	ND
ISOPROPYLBENZENE	500	ND
1,1,2,2-TETRACHLOROETHANE	500	ND
BROMOBENZENE	500	ND
1,2,3-TRICHLOROPROPANE	500	ND
n-PROPYLBENZENE	500	ND
2-CHLOROTOLUENE	500	ND
1,3,5-TRIMETHYLBENZENE	500	ND
4-CHLOROTOLUENE	500	ND
TERT-BUTYLBENZENE	500	ND
1,2,4-TRIMETHYLBENZENE	500	ND
sec-BUTYLBENZENE	500	ND
1,3-DICHLOROBENZENE	500	ND
p-ISOPROPYLTOLUENE	500	ND
1,4-DICHLOROBENZENE	500	ND
n-BUTYLBENZENE	500	ND
1,2-DICHLOROBENZENE	500	ND
1,2-DIBROMO-3-CHLOROPROPANE	500	ND
1,2,4-TRICHLOROBENZENE	500	ND
HEXACHLOROBUTADIENE	500	ND
NAPHTHALENE	500	830

QA/QC SURROGATE RECOVERIES

TOLUENE-d8(81-117) 101% BROMOFLUOROBENZENE(74-121) 109%
1,2-DICHLOROETHANE-D4(70-121) 98%

B = ANALYTE DETECTED IN METHOD BLANK, POSSIBLY BELOW THE REPORTING LIMIT.
J = ESTIMATED VALUE; BELOW REPORTING LIMIT
ND = NOT DETECTED ABOVE REPORTING LIMIT
RL = REPORTING LIMIT; DEFINED AS THE PRACTICAL QUANTITATION LIMIT PLUS ANY DILUTION

ATAS 875 Fee Fee Road • Maryland Heights, MO 63043 • (314) 434-4570 - FAX (314) 434-0080

CLIENT: DAMES & MOORE
721 EMERSON ROAD, SUITE 220
ST. LOUIS, MO 63141
ATTN: GEORGE JONES

REPORT: 2891301VO(720)

DATE : 02-15-00

SAMPLE MATRIX : SOIL
ATAS # : 28913.13
DATE SUBMITTED: 02-09-00
DATE ANALYZED : 02-10-00

METHOD REF.: SW846-8260B, EPA METHODOLOGY
PROJECT # : 27994-022-045 - PENTAIR
SAMPLE ID : GP-13-7'

RESULTS REPORTED IN ug/Kg OR Parts Per Billion (PPB)

VOLATILES	R.L.	RESULTS
XYLENE (TOTAL)	5	ND
DICHLORODIFLUOROMETHANE	10	ND
CHLOROMETHANE	10	ND
VINYL CHLORIDE	10	ND
BROMOMETHANE	10	ND
CHLOROETHANE	10	ND
TRICHLOROFLUOROMETHANE	10	ND
1,1-DICHLOROETHENE	5	ND
ACETONE	10	36
IODOMETHANE	10	ND
CARBON DISULFIDE	5	ND
METHYLENE CHLORIDE	5	14 B
trans-1,2-DICHLOROETHENE	5	ND
METHYL TERT-BUTYL ETHER	10	ND
1,1-DICHLOROETHANE	5	ND
VINYL ACETATE	10	ND
2,2-DICHLOROPROPANE	5	ND
cis-1,2-DICHLOROETHENE	5	ND
2-BUTANONE	10	ND
BROMOCHLOROMETHANE	5	ND
CHLOROFORM	5	ND
1,1,1-TRICHLOROETHANE	5	ND
CARBON TETRACHLORIDE	5	ND
1,1-DICHLOROPROPENE	5	ND
BENZENE	5	ND
1,2-DICHLOROETHANE	5	ND
TRICHLOROETHENE	5	ND
1,2-DICHLOROPROPANE	5	ND
DIBROMOMETHANE	5	ND
BROMODICHLOROMETHANE	5	ND
cis-1,3-DICHLOROPROPENE	5	ND
4-METHYL-2-PENTANONE	10	ND
1,2,3-TRICHLOROBENZENE	5	ND

VOLATILES	R.L.	RESULTS
TOLUENE	5	ND
trans-1,3-DICHLOROPROPENE	5	ND
1,1,2-TRICHLOROETHANE	5	ND
TETRACHLOROETHENE	5	ND
1,3-DICHLOROPROPANE	5	ND
2-HEXANONE	10	ND
DIBROMOCHLOROMETHANE	5	ND
1,2-DIBROMOETHANE	5	ND
CHLOROBENZENE	5	ND
1,1,1,2-TETRACHLOROETHANE	5	ND
ETHYLBENZENE	5	ND
STYRENE	5	ND
BROMOFORM	5	ND
ISOPROPYLBENZENE	5	ND
1,1,2,2-TETRACHLOROETHANE	5	ND
BROMOBENZENE	5	ND
1,2,3-TRICHLOROPROPANE	5	ND
n-PROPYLBENZENE	5	ND
2-CHLOROTOLUENE	5	ND
1,3,5-TRIMETHYLBENZENE	5	ND
4-CHLOROTOLUENE	5	ND
TERT-BUTYLBENZENE	5	ND
1,2,4-TRIMETHYLBENZENE	5	ND
sec-BUTYLBENZENE	5	ND
1,3-DICHLOROBENZENE	5	ND
p-ISOPROPYLTOLUENE	5	ND
1,4-DICHLOROBENZENE	5	ND
n-BUTYLBENZENE	5	ND
1,2-DICHLOROBENZENE	5	ND
1,2-DIBROMO-3-CHLOROPROPANE	5	ND
1,2,4-TRICHLOROBENZENE	5	ND
HEXACHLOROBUTADIENE	5	ND
NAPHTHALENE	5	ND

QA/QC SURROGATE RECOVERIES

TOLUENE-d8(81-117) 98% BROMOFLUOROBENZENE(74-121) 94%
1,2-DICHLOROETHANE-D4(70-121) 96%

B = ANALYTE DETECTED IN METHOD BLANK, POSSIBLY BELOW THE REPORTING LIMIT.
ND = NOT DETECTED ABOVE REPORTING LIMIT
RL = REPORTING LIMIT; DEFINED AS THE PRACTICAL QUANTITATION LIMIT PLUS ANY DILUTION, POSITIVE VALUES BELOW THIS LIMIT WERE NOT REPORTED.

ATAS 875 Fee Fee Road • Maryland Heights, MO 63043 • (314) 434-4570 - FAX (314) 434-0080

REPORT: 2891301VO(720)

DATE : 02-15-00

CLIENT: DAMES & MOORE
721 EMERSON ROAD, SUITE 220
ST. LOUIS, MO 63141
ATTN: GEORGE JONES

SAMPLE MATRIX : SOIL
ATAS # : 28913.14
DATE SUBMITTED: 02-09-00
DATE ANALYZED : 02-10-00

METHOD REF.: SW846-8260B, EPA METHODOLOGY
PROJECT # : 27994-022-045 - PENTAIR
SAMPLE ID : GP-13-11'

RESULTS REPORTED IN ug/Kg OR Parts Per Billion (PPB)

VOLATILES	R.L.	RESULTS
XYLENE (TOTAL)	5	ND
DICHLORODIFLUOROMETHANE	10	ND
CHLOROMETHANE	10	ND
VINYL CHLORIDE	10	ND
BROMOMETHANE	10	ND
CHLOROETHANE	10	ND
TRICHLOROFLUOROMETHANE	10	ND
1,1-DICHLOROETHENE	5	ND
ACETONE	10	47
IODOMETHANE	10	ND
CARBON DISULFIDE	5	ND
METHYLENE CHLORIDE	5	16 B
t- s-1,2-DICHLOROETHENE	5	ND
M fL TERT-BUTYL ETHER	10	ND
1,1-DICHLOROETHANE	5	ND
VINYL ACETATE	10	ND
2,2-DICHLOROPROPANE	5	ND
cis-1,2-DICHLOROETHENE	5	ND
2-BUTANONE	10	ND
BROMOCHLOROMETHANE	5	ND
CHLOROFORM	5	ND
1,1,1-TRICHLOROETHANE	5	ND
CARBON TETRACHLORIDE	5	ND
1,1-DICHLOROPROPENE	5	ND
BENZENE	5	ND
1,2-DICHLOROETHANE	5	ND
TRICHLOROETHENE	5	ND
1,2-DICHLOROPROPANE	5	ND
DIBROMOMETHANE	5	ND
BROMODICHLOROMETHANE	5	ND
cis-1,3-DICHLOROPROPENE	5	ND
4-METHYL-2-PENTANONE	10	ND
1,2,3-TRICHLOROBENZENE	5	ND

VOLATILES	R.L.	RESULTS
TOLUENE	5	ND
trans-1,3-DICHLOROPROPENE	5	ND
1,1,2-TRICHLOROETHANE	5	ND
TETRACHLOROETHENE	5	ND
1,3-DICHLOROPROPANE	5	ND
2-HEXANONE	10	ND
DIBROMOCHLOROMETHANE	5	ND
1,2-DIBROMOETHANE	5	ND
CHLOROBENZENE	5	ND
1,1,1,2-TETRACHLOROETHANE	5	ND
ETHYLBENZENE	5	ND
STYRENE	5	ND
BROMOFORM	5	ND
ISOPROPYLBENZENE	5	ND
1,1,2,2-TETRACHLOROETHANE	5	ND
BROMOBENZENE	5	ND
1,2,3-TRICHLOROPROPANE	5	ND
n-PROPYLBENZENE	5	ND
2-CHLOROTOLUENE	5	ND
1,3,5-TRIMETHYLBENZENE	5	ND
4-CHLOROTOLUENE	5	ND
TERT-BUTYLBENZENE	5	ND
1,2,4-TRIMETHYLBENZENE	5	ND
sec-BUTYLBENZENE	5	ND
1,3-DICHLOROBENZENE	5	ND
p-ISOPROPYLTOLUENE	5	ND
1,4-DICHLOROBENZENE	5	ND
n-BUTYLBENZENE	5	ND
1,2-DICHLOROBENZENE	5	ND
1,2-DIBROMO-3-CHLOROPROPANE	5	ND
1,2,4-TRICHLOROBENZENE	5	ND
HEXACHLOROBUTADIENE	5	ND
NAPHTHALENE	5	ND

QA/QC SURROGATE RECOVERIES

TOLUENE-d8(81-117) 98% BROMOFLUOROBENZENE(74-121) 96%
1,2-DICHLOROETHANE-D4(70-121) 97%

B = ANALYTE DETECTED IN METHOD BLANK, POSSIBLY BELOW THE REPORTING LIMIT.
ND = NOT DETECTED ABOVE REPORTING LIMIT
RL = REPORTING LIMIT; DEFINED AS THE PRACTICAL QUANTITATION LIMIT PLUS ANY DILUTION, POSITIVE VALUES BELOW THIS LIMIT WERE NOT REPORTED.

ATAS 875 Fee Fee Road • Maryland Heights, MO 63043 • (314) 434-4570 - FAX (314) 434-0080

CLIENT: DAMES & MOORE
721 EMERSON ROAD, SUITE 220
ST. LOUIS, MO 63141
ATTN: GEORGE JONES

REPORT: 2891901VO(720)

DATE : 02-16-00

SAMPLE MATRIX : SOIL
ATAS # : 28919.01
DATE SUBMITTED: 02-09-00
DATE ANALYZED : 02-14-00

METHOD REF.: SW846-8260B, EPA METHODOLOGY
PROJECT # : 27994-022-045 - PENTAIR
SAMPLE ID : GP-14-4'

RESULTS REPORTED IN ug/Kg OR Parts Per Billion (PPB)

VOLATILES	R.L.	RESULTS
XYLENE (TOTAL)	500	ND
DICHLORODIFLUOROMETHANE	1000	ND
CHLOROMETHANE	1000	ND
VINYL CHLORIDE	1000	ND
BROMOMETHANE	1000	ND
CHLOROETHANE	1000	ND
TRICHLOROFLUOROMETHANE	1000	ND
1,1-DICHLOROETHENE	500	ND
ACETONE	1000	ND
IODOMETHANE	1000	ND
CARBON DISULFIDE	500	ND
METHYLENE CHLORIDE	500	940 B
trans-1,2-DICHLOROETHENE	500	ND
M[illegible]L TERT-BUTYL ETHER	1000	ND
1,1-DICHLOROETHANE	500	ND
VINYL ACETATE	1000	ND
2,2-DICHLOROPROPANE	500	ND
cis-1,2-DICHLOROETHENE	500	ND
2-BUTANONE	1000	ND
BROMOCHLOROMETHANE	500	ND
CHLOROFORM	500	ND
1,1,1-TRICHLOROETHANE	500	ND
CARBON TETRACHLORIDE	500	ND
1,1-DICHLOROPROPENE	500	ND
BENZENE	500	ND
1,2-DICHLOROETHANE	500	ND
TRICHLOROETHENE	500	ND
1,2-DICHLOROPROPANE	500	ND
DIBROMOMETHANE	500	ND
BROMODICHLOROMETHANE	500	ND
cis-1,3-DICHLOROPROPENE	500	ND
4-METHYL-2-PENTANONE	1000	ND
1,2,3-TRICHLOROBENZENE	500	ND

VOLATILES	R.L.	RESULTS
TOLUENE	500	ND
trans-1,3-DICHLOROPROPENE	500	ND
1,1,2-TRICHLOROETHANE	500	ND
TETRACHLOROETHENE	500	ND
1,3-DICHLOROPROPANE	500	ND
2-HEXANONE	1000	ND
DIBROMOCHLOROMETHANE	500	ND
1,2-DIBROMOETHANE	500	ND
CHLOROBENZENE	500	ND
1,1,1,2-TETRACHLOROETHANE	500	ND
ETHYLBENZENE	500	ND
STYRENE	500	ND
BROMOFORM	500	ND
ISOPROPYLBENZENE	500	200 J
1,1,2,2-TETRACHLOROETHANE	500	ND
BROMOBENZENE	500	ND
1,2,3-TRICHLOROPROPANE	500	ND
n-PROPYLBENZENE	500	450 J
2-CHLOROTOLUENE	500	ND
1,3,5-TRIMETHYLBENZENE	500	ND
4-CHLOROTOLUENE	500	ND
TERT-BUTYLBENZENE	500	ND
1,2,4-TRIMETHYLBENZENE	500	ND
sec-BUTYLBENZENE	500	810
1,3-DICHLOROBENZENE	500	ND
p-ISOPROPYLTOLUENE	500	ND
1,4-DICHLOROBENZENE	500	ND
n-BUTYLBENZENE	500	1200
1,2-DICHLOROBENZENE	500	ND
1,2-DIBROMO-3-CHLOROPROPANE	500	ND
1,2,4-TRICHLOROBENZENE	500	ND
HEXACHLOROBUTADIENE	500	ND
NAPHTHALENE	500	740

QA/QC SURROGATE RECOVERIES

TOLUENE-d8(81-117) 104% BROMOFLUOROBENZENE(74-121) 99%
1,2-DICHLOROETHANE-D4(70-121) 91%

B = ANALYTE DETECTED IN METHOD BLANK, POSSIBLY BELOW THE REPORTING LIMIT.
J = ESTIMATED VALUE BELOW REPORTING LIMIT
ND = NOT DETECTED ABOVE REPORTING LIMIT
RL = REPORTING LIMIT; DEFINED AS THE PRACTICAL QUANTITATION LIMIT PLUS ANY DILUTION

ATAS 875 Fee Fee Road • Maryland Heights, MO 63043 • (314) 434-4570 - FAX (314) 434-0080

REPORT: 2891901VO(720)

DATE : 02-16-00

CLIENT: DAMES & MOORE
721 EMERSON ROAD, SUITE 220
ST. LOUIS, MO 63141
ATTN: GEORGE JONES

SAMPLE MATRIX : SOIL
ATAS # : 28919.02
DATE SUBMITTED: 02-09-00
DATE ANALYZED : 02-10-00

METHOD REF.: SW846-8260B, EPA METHODOLOGY
PROJECT # : 27994-022-045 - PENTAIR
SAMPLE ID : GP-14-15'

RESULTS REPORTED IN ug/Kg OR Parts Per Billion (PPB)

VOLATILES	R.L.	RESULTS
XYLENE (TOTAL)	5	ND
DICHLORODIFLUOROMETHANE	10	ND
CHLOROMETHANE	10	ND
VINYL CHLORIDE	10	ND
BROMOMETHANE	10	ND
CHLOROETHANE	10	ND
TRICHLOROFLUOROMETHANE	10	ND
1,1-DICHLOROETHENE	5	ND
ACETONE	10	ND
IODOMETHANE	10	ND
CARBON DISULFIDE	5	ND
METHYLENE CHLORIDE	5	14 B
t[illegible]-1,2-DICHLOROETHENE	5	ND
M[illegible]L TERT-BUTYL ETHER	10	ND
1,1-DICHLOROETHANE	5	ND
VINYL ACETATE	10	ND
2,2-DICHLOROPROPANE	5	ND
cis-1,2-DICHLOROETHENE	5	ND
2-BUTANONE	10	ND
BROMOCHLOROMETHANE	5	ND
CHLOROFORM	5	ND
1,1,1-TRICHLOROETHANE	5	ND
CARBON TETRACHLORIDE	5	ND
1,1-DICHLOROPROPENE	5	ND
BENZENE	5	ND
1,2-DICHLOROETHANE	5	ND
TRICHLOROETHENE	5	ND
1,2-DICHLOROPROPANE	5	ND
DIBROMOMETHANE	5	ND
BROMODICHLOROMETHANE	5	ND
cis-1,3-DICHLOROPROPENE	5	ND
4-METHYL-2-PENTANONE	10	ND
1,2,3-TRICHLOROBENZENE	5	ND

VOLATILES	R.L.	RESULTS
TOLUENE	5	ND
trans-1,3-DICHLOROPROPENE	5	ND
1,1,2-TRICHLOROETHANE	5	ND
TETRACHLOROETHENE	5	ND
1,3-DICHLOROPROPANE	5	ND
2-HEXANONE	10	ND
DIBROMOCHLOROMETHANE	5	ND
1,2-DIBROMOETHANE	5	ND
CHLOROBENZENE	5	ND
1,1,1,2-TETRACHLOROETHANE	5	ND
ETHYLBENZENE	5	ND
STYRENE	5	ND
BROMOFORM	5	ND
ISOPROPYLBENZENE	5	ND
1,1,2,2-TETRACHLOROETHANE	5	ND
BROMOBENZENE	5	ND
1,2,3-TRICHLOROPROPANE	5	ND
n-PROPYLBENZENE	5	ND
2-CHLOROTOLUENE	5	ND
1,3,5-TRIMETHYLBENZENE	5	ND
4-CHLOROTOLUENE	5	ND
TERT-BUTYLBENZENE	5	ND
1,2,4-TRIMETHYLBENZENE	5	ND
sec-BUTYLBENZENE	5	ND
1,3-DICHLOROBENZENE	5	ND
p-ISOPROPYLTOLUENE	5	ND
1,4-DICHLOROBENZENE	5	ND
n-BUTYLBENZENE	5	ND
1,2-DICHLOROBENZENE	5	ND
1,2-DIBROMO-3-CHLOROPROPANE	5	ND
1,2,4-TRICHLOROBENZENE	5	ND
HEXACHLOROBUTADIENE	5	ND
NAPHTHALENE	5	ND

QA/QC SURROGATE RECOVERIES

TOLUENE-d8(81-117) 97% BROMOFLUOROBENZENE(74-121) 99%
1,2-DICHLOROETHANE-D4(70-121) 102%

B = ANALYTE DETECTED IN METHOD BLANK, POSSIBLY BELOW THE REPORTING LIMIT.
ND = NOT DETECTED ABOVE REPORTING LIMIT
RL = REPORTING LIMIT; DEFINED AS THE PRACTICAL QUANTITATION LIMIT PLUS ANY DILUTION, POSITIVE VALUES BELOW THIS LIMIT WERE NOT REPORTED.

ATAS 875 Fee Fee Road • Maryland Heights, MO 63043 • (314) 434-4570 - FAX (314) 434-0080

CLIENT: DAMES & MOORE
721 EMERSON ROAD, SUITE 220
ST. LOUIS, MO 63141
ATTN: GEORGE JONES

REPORT: 2891901VO(720)

DATE : 02-16-00

SAMPLE MATRIX : SOIL
ATAS # : 28919.04
DATE SUBMITTED: 02-09-00
DATE ANALYZED : 02-14-00

METHOD REF.: SW846-8260B, EPA METHODOLOGY
PROJECT # : 27994-022-045 - PENTAIR
SAMPLE ID : GP-15-4'

RESULTS REPORTED IN ug/Kg OR Parts Per Billion (PPB)

VOLATILES	R.L.	RESULTS	VOLATILES	R.L.	RESULTS
XYLENE (TOTAL)	5	ND	TOLUENE	5	ND
DICHLORODIFLUOROMETHANE	10	ND	trans-1,3-DICHLOROPROPENE	5	ND
CHLOROMETHANE	10	ND	1,1,2-TRICHLOROETHANE	5	ND
VINYL CHLORIDE	10	ND	TETRACHLOROETHENE	5	ND
BROMOMETHANE	10	ND	1,3-DICHLOROPROPANE	5	ND
CHLOROETHANE	10	ND	2-HEXANONE	10	ND
TRICHLOROFLUOROMETHANE	10	ND	DIBROMOCHLOROMETHANE	5	ND
1,1-DICHLOROETHENE	5	ND	1,2-DIBROMOETHANE	5	ND
ACETONE	10	ND	CHLOROBENZENE	5	ND
IODOMETHANE	10	ND	1,1,1,2-TETRACHLOROETHANE	5	ND
CARBON DISULFIDE	5	ND	ETHYLBENZENE	5	ND
METHYLENE CHLORIDE	5	9 B	STYRENE	5	ND
t- [illegible]-1,2-DICHLOROETHENE	5	ND	BROMOFORM	5	ND
M[illegible]L TERT-BUTYL ETHER	10	ND	ISOPROPYLBENZENE	5	ND
1,1-DICHLOROETHANE	5	ND	1,1,2,2-TETRACHLOROETHANE	5	ND
VINYL ACETATE	10	ND	BROMOBENZENE	5	ND
2,2-DICHLOROPROPANE	5	ND	1,2,3-TRICHLOROPROPANE	5	ND
cis-1,2-DICHLOROETHENE	5	ND	n-PROPYLBENZENE	5	ND
2-BUTANONE	10	ND	2-CHLOROTOLUENE	5	ND
BROMOCHLOROMETHANE	5	ND	1,3,5-TRIMETHYLBENZENE	5	ND
CHLOROFORM	5	ND	4-CHLOROTOLUENE	5	ND
1,1,1-TRICHLOROETHANE	5	ND	TERT-BUTYLBENZENE	5	ND
CARBON TETRACHLORIDE	5	ND	1,2,4-TRIMETHYLBENZENE	5	ND
1,1-DICHLOROPROPENE	5	ND	sec-BUTYLBENZENE	5	ND
BENZENE	5	ND	1,3-DICHLOROBENZENE	5	ND
1,2-DICHLOROETHANE	5	ND	p-ISOPROPYLTOLUENE	5	ND
TRICHLOROETHENE	5	ND	1,4-DICHLOROBENZENE	5	ND
1,2-DICHLOROPROPANE	5	ND	n-BUTYLBENZENE	5	ND
DIBROMOMETHANE	5	ND	1,2-DICHLOROBENZENE	5	ND
BROMODICHLOROMETHANE	5	ND	1,2-DIBROMO-3-CHLOROPROPANE	5	ND
cis-1,3-DICHLOROPROPENE	5	ND	1,2,4-TRICHLOROBENZENE	5	ND
4-METHYL-2-PENTANONE	10	ND	HEXACHLOROBUTADIENE	5	ND
1,2,3-TRICHLOROBENZENE	5	ND	NAPHTHALENE	5	ND

QA/QC SURROGATE RECOVERIES

TOLUENE-d8(81-117) 97% BROMOFLUOROBENZENE(74-121) 100%
1,2-DICHLOROETHANE-D4(70-121) 98%

B = ANALYTE DETECTED IN METHOD BLANK, POSSIBLY BELOW THE REPORTING LIMIT.
ND = NOT DETECTED ABOVE REPORTING LIMIT
RL = REPORTING LIMIT; DEFINED AS THE PRACTICAL QUANTITATION LIMIT PLUS ANY DILUTION, POSITIVE VALUES BELOW THIS LIMIT WERE NOT REPORTED.

ATAS 875 Fee Fee Road • Maryland Heights, MO 63043 • (314) 434-4570 - FAX (314) 434-0080

CLIENT: DAMES & MOORE
721 EMERSON ROAD, SUITE 220
ST. LOUIS, MO 63141
ATTN: GEORGE JONES

REPORT: 2891901VO(720)

DATE : 02-16-00

SAMPLE MATRIX : SOIL
ATAS # : 28919.05
DATE SUBMITTED: 02-09-00
DATE ANALYZED : 02-10-00

METHOD REF.: SW846-8260B, EPA METHODOLOGY
PROJECT # : 27994-022-045 - PENTAIR
SAMPLE ID : GP-15-19'

RESULTS REPORTED IN ug/Kg OR Parts Per Billion (PPB)

VOLATILES	R.L.	RESULTS	VOLATILES	R.L.	RESULTS
XYLENE (TOTAL)	5	ND	TOLUENE	5	ND
DICHLORODIFLUOROMETHANE	10	ND	trans-1,3-DICHLOROPROPENE	5	ND
CHLOROMETHANE	10	ND	1,1,2-TRICHLOROETHANE	5	ND
VINYL CHLORIDE	10	ND	TETRACHLOROETHENE	5	ND
BROMOMETHANE	10	ND	1,3-DICHLOROPROPANE	5	ND
CHLOROETHANE	10	ND	2-HEXANONE	10	ND
TRICHLOROFLUOROMETHANE	10	ND	DIBROMOCHLOROMETHANE	5	ND
1,1-DICHLOROETHENE	5	ND	1,2-DIBROMOETHANE	5	ND
ACETONE	10	ND	CHLOROBENZENE	5	ND
IODOMETHANE	10	ND	1,1,1,2-TETRACHLOROETHANE	5	ND
CARBON DISULFIDE	5	ND	ETHYLBENZENE	5	ND
METHYLENE CHLORIDE	5	16 B	STYRENE	5	ND
trans-1,2-DICHLOROETHENE	5	ND	BROMOFORM	5	ND
N YL TERT-BUTYL ETHER	10	ND	ISOPROPYLBENZENE	5	ND
1,_-DICHLOROETHANE	5	ND	1,1,2,2-TETRACHLOROETHANE	5	ND
VINYL ACETATE	10	ND	BROMOBENZENE	5	ND
2,2-DICHLOROPROPANE	5	ND	1,2,3-TRICHLOROPROPANE	5	ND
cis-1,2-DICHLOROETHENE	5	ND	n-PROPYLBENZENE	5	ND
2-BUTANONE	10	ND	2-CHLOROTOLUENE	5	ND
BROMOCHLOROMETHANE	5	ND	1,3,5-TRIMETHYLBENZENE	5	ND
CHLOROFORM	5	ND	4-CHLOROTOLUENE	5	ND
1,1,1-TRICHLOROETHANE	5	ND	TERT-BUTYLBENZENE	5	ND
CARBON TETRACHLORIDE	5	ND	1,2,4-TRIMETHYLBENZENE	5	ND
1,1-DICHLOROPROPENE	5	ND	sec-BUTYLBENZENE	5	ND
BENZENE	5	ND	1,3-DICHLOROBENZENE	5	ND
1,2-DICHLOROETHANE	5	ND	p-ISOPROPYLTOLUENE	5	ND
TRICHLOROETHENE	5	ND	1,4-DICHLOROBENZENE	5	ND
1,2-DICHLOROPROPANE	5	ND	n-BUTYLBENZENE	5	ND
DIBROMOMETHANE	5	ND	1,2-DICHLOROBENZENE	5	ND
BROMODICHLOROMETHANE	5	ND	1,2-DIBROMO-3-CHLOROPROPANE	5	ND
cis-1,3-DICHLOROPROPENE	5	ND	1,2,4-TRICHLOROBENZENE	5	ND
4-METHYL-2-PENTANONE	10	ND	HEXACHLOROBUTADIENE	5	ND
1,2,3-TRICHLOROBENZENE	5	ND	NAPHTHALENE	5	ND

QA/QC SURROGATE RECOVERIES

TOLUENE-d8(81-117) 95% BROMOFLUOROBENZENE(74-121) 96%
1,2-DICHLOROETHANE-D4(70-121) 95%

B = ANALYTE DETECTED IN METHOD BLANK, POSSIBLY BELOW THE REPORTING LIMIT.
ND = NOT DETECTED ABOVE REPORTING LIMIT
RL = REPORTING LIMIT; DEFINED AS THE PRACTICAL QUANTITATION LIMIT PLUS ANY DILUTION, POSITIVE VALUES BELOW THIS LIMIT WERE NOT REPORTED.

ATAS 875 Fee Fee Road • Maryland Heights, MO 63043 • (314) 434-4570 - FAX (314) 434-0080

CLIENT: DAMES & MOORE
721 EMERSON ROAD, SUITE 220
ST. LOUIS, MO 63141
ATTN: GEORGE JONES

REPORT: 2889901PC(720)
DATE : 02-14-00

SAMPLE MATRIX : WOOD SHAVINGS
ATAS # : 28899.07
DATE SUBMITTED: 02-08-00
DATE EXTRACTED: 02-08-00
DATE ANALYZED : 02-11-00
METHOD REF. : SW846-8082, EPA METHODOLOGY
PROJECT : PENTAIR
SAMPLE ID : WBF-3

RESULTS REPORTED IN ug/Kg OR Parts Per Billion (PPB)

PCB'S	REPORTING LIMIT	RESULTS
AROCLOR 1016	150	ND
AROCLOR 1221	150	ND
AROCLOR 1232	150	ND
AROCLOR 1242	150	ND
AROCLOR 1248	150	ND
AROCLOR 1254	150	ND
AROCLOR 1260	150	ND
TOTAL PCBs		ND

QA/QC SURROGATE RECOVERY

DECACHLOROBIPHENYL(30-150)	77 %
TETRACHLORO-M-XYLENE(30-150)	70 %

ND NOT DETECTED ABOVE REPORTING LIMIT
B ANALYTE DETECTED IN METHOD BLANK POSSIBLY BELOW THE REPORTING LIMIT.

ATAS 875 Fee Fee Road • Maryland Heights, MO 63043 • (314) 434-4570 - FAX (314) 434-0080

C. NT: DAMES & MOORE
721 EMERSON ROAD, SUITE 220
ST. LOUIS, MO 63141
ATTN: GEORGE JONES

REPORT: 2889901PC(720)

DATE : 02-14-00

SAMPLE MATRIX : WOOD SHAVINGS
ATAS # : 28899.06
DATE SUBMITTED: 02-08-00
DATE EXTRACTED: 02-08-00
DATE ANALYZED : 02-11-00
METHOD REF. : SW846-8082, EPA METHODOLOGY
PROJECT : PENTAIR
SAMPLE ID : WBF-2

RESULTS REPORTED IN ug/Kg OR Parts Per Billion (PPB)

PCB'S	REPORTING LIMIT	RESULTS
AROCLOR 1016	150	ND
AROCLOR 1221	150	ND
AROCLOR 1232	150	ND
AROCLOR 1242	150	ND
AROCLOR 1248	150	ND
AROCLOR 1254	150	ND
AROCLOR 1260	150	ND
TOTAL PCBs		ND

QA/QC SURROGATE RECOVERY

DECACHLOROBIPHENYL(30-150)	56 %
TETRACHLORO-M-XYLENE(30-150)	72 %

ND NOT DETECTED ABOVE REPORTING LIMIT
b ANALYTE DETECTED IN METHOD BLANK POSSIBLY BELOW THE REPORTING LIMIT.

ATAS 875 Fee Fee Road • Maryland Heights, MO 63043 • (314) 434-4570 - FAX (314) 434-0080

C NT: DAMES & MOORE
721 EMERSON ROAD, SUITE 220
ST. LOUIS, MO 63141
ATTN: GEORGE JONES

REPORT: 2889901PC(720)
DATE : 02-14-00

SAMPLE MATRIX : WOOD SHAVINGS
ATAS # : 28899.05
DATE SUBMITTED: 02-08-00
DATE EXTRACTED: 02-08-00
DATE ANALYZED : 02-11-00
METHOD REF. : SW846-8082, EPA METHODOLOGY
PROJECT - : PENTAIR
SAMPLE ID : WBF-1

RESULTS REPORTED IN ug/Kg OR Parts Per Billion (PPB)

PCB'S	REPORTING LIMIT	RESULTS
AROCLOR 1016	150	ND
AROCLOR 1221	150	ND
AROCLOR 1232	150	ND
AROCLOR 1242	150	ND
AROCLOR 1248	150	ND
AROCLOR 1254	150	ND
AROCLOR 1260	150	ND
TOTAL PCBs		ND

QA/QC SURROGATE RECOVERY

DECACHLOROBIPHENYL(30-150)	61 %
TETRACHLORO-M-XYLENE(30-150)	78 %

NT NOT DETECTED ABOVE REPORTING LIMIT
1 ANALYTE DETECTED IN METHOD BLANK POSSIBLY BELOW THE REPORTING LIMIT.

ATAS 875 Fee Fee Road • Maryland Heights, MO 63043 • (314) 434-4570 - FAX (314) 434-0080

CLIENT: DAMES & MOORE
721 EMERSON ROAD, SUITE 220
ST. LOUIS, MO 63141
ATTN: GEORGE JONES

REPORT: 2893601MT(720)
DATE : 02-16-00

SAMPLE MATRIX : WATER
ATAS # : 28936.08
DATE SUBMITTED: 02-10-00
PROJECT : #27994-022-045 - PENTAIR
SAMPLE ID : GP-14

PARAMETER	REPORTING LIMIT	UNITS	RESULTS	DATE ANALYZED	METHOD REFERENCE
			DISSOLVED METALS		
ARSENIC	0.050	mg/L	ND	02-12-00	SW 6010
BARIUM	0.020	mg/L	0.18	02-14-00	SW 6010
CADMIUM	0.005	mg/L	ND	02-14-00	SW 6010
CHROMIUM	0.005	mg/L	ND	02-14-00	SW 6010
LEAD	0.050	mg/L	ND	02-14-00	SW 6010
SILVER	0.010	mg/L	ND	02-14-00	SW 6010
SELENIUM	0.100	mg/L	ND	02-14-00	SW 6010
MERCURY	0.002	mg/L	ND	02-15-00	SW 7470

mg/L = PARTS PER MILLION(PPM)
ND = NOT DETECTED ABOVE REPORTING LIMIT

ATAS 875 Fee Fee Road • Maryland Heights, MO 63043 • (314) 434-4570 - FAX (314) 434-0080

LIENT: DAMES & MOORE
721 EMERSON ROAD, SUITE 220
ST. LOUIS, MO 63141
ATTN: GEORGE JONES

REPORT: 2893601MT(720)

DATE : 02-16-00

SAMPLE MATRIX : WATER
ATAS # : 28936.05
DATE SUBMITTED: 02-10-00
PROJECT : #27994-022-045 - PENTAIR
SAMPLE ID : GP-12

PARAMETER	REPORTING LIMIT	UNITS	RESULTS	DATE ANALYZED	METHOD REFERENCE
			DISSOLVED METALS		
ARSENIC	0.050	mg/L	ND	02-12-00	SW 6010
BARIUM	0.020	mg/L	0.90	02-14-00	SW 6010
CADMIUM	0.005	mg/L	ND	02-14-00	SW 6010
HROMIUM	0.005	mg/L	ND	02-14-00	SW 6010
LEAD	0.050	mg/L	ND	02-14-00	SW 6010
SILVER	0.010	mg/L	ND	02-14-00	SW 6010
SELENIUM	0.100	mg/L	ND	02-14-00	SW 6010
MERCURY	0.002	mg/L	ND	02-15-00	SW 7470

mg/L = PARTS PER MILLION(PPM)
) = NOT DETECTED ABOVE REPORTING LIMIT

ATAS 875 Fee Fee Road • Maryland Heights, MO 63043 • (314) 434-4570 - FAX (314) 434-0080

CLIENT: DAMES & MOORE
721 EMERSON ROAD, SUITE 220
ST. LOUIS, MO 63141
ATTN: GEORGE JONES

REPORT: 2893601MT(720)

DATE : 02-16-00

SAMPLE MATRIX : WATER
ATAS # : 28936.03
DATE SUBMITTED: 02-10-00
PROJECT : #27994-022-045 - PENTAIR
SAMPLE ID : GP-11

PARAMETER	REPORTING LIMIT	UNITS	RESULTS	DATE ANALYZED	METHOD REFERENCE
			DISSOLVED METALS		
ARSENIC	0.050	mg/L	ND	02-12-00	SW 6010
BARIUM	0.020	mg/L	0.24	02-14-00	SW 6010
CADMIUM	0.005	mg/L	ND	02-14-00	SW 6010
CHROMIUM	0.005	mg/L	ND	02-14-00	SW 6010
LEAD	0.050	mg/L	ND	02-14-00	SW 6010
SILVER	0.010	mg/L	ND	02-14-00	SW 6010
SELENIUM	0.100	mg/L	ND	02-14-00	SW 6010
MERCURY	0.002	mg/L	ND	02-15-00	SW 7470

mg/L = PARTS PER MILLION(PPM)
ND = NOT DETECTED ABOVE REPORTING LIMIT

ATAS 875 Fee Fee Road • Maryland Heights, MO 63043 • (314) 434-4570 - FAX (314) 434-0080

CLIENT: DAMES & MOORE
721 EMERSON ROAD, SUITE 220
ST. LOUIS, MO 63141
ATTN: GEORGE JONES

REPORT: 2893601MT(720)
DATE : 02-16-00

SAMPLE MATRIX : WATER
ATAS # : 28936.02
DATE SUBMITTED: 02-10-00
PROJECT : #27994-022-045 - PENTAIR
SAMPLE ID : GP-10

PARAMETER	REPORTING LIMIT	UNITS	RESULTS	DATE ANALYZED	METHOD REFERENCE
			DISSOLVED METALS		
ARSENIC	0.050	mg/L	ND	02-12-00	SW 6010
BARIUM	0.020	mg/L	0.37	02-14-00	SW 6010
CADMIUM	0.005	mg/L	ND	02-14-00	SW 6010
CHROMIUM	0.005	mg/L	ND	02-14-00	SW 6010
LEAD	0.050	mg/L	ND	02-14-00	SW 6010
SILVER	0.010	mg/L	ND	02-14-00	SW 6010
SELENIUM	0.100	mg/L	ND	02-14-00	SW 6010
MERCURY	0.002	mg/L	ND	02-15-00	SW 7470

mg/L = PARTS PER MILLION(PPM)
ND = NOT DETECTED ABOVE REPORTING LIMIT

ATAS 875 Fee Fee Road • Maryland Heights, MO 63043 • (314) 434-4570 - FAX (314) 434-0080

:LIENT: DAMES & MOORE
721 EMERSON ROAD, SUITE 220
ST. LOUIS, MO 63141
ATTN: GEORGE JONES

REPORT: 2893601MT(720)

DATE : 02-16-00

SAMPLE MATRIX : WATER
ATAS # : 28936.04
DATE SUBMITTED: 02-10-00
PROJECT : #27994-022-045 - PENTAIR
SAMPLE ID : GP-9

PARAMETER	REPORTING LIMIT	UNITS	RESULTS	DATE ANALYZED	METHOD REFERENCE
			DISSOLVED METALS		
ARSENIC	0.050	mg/L	ND	02-12-00	SW 6010
BARIUM	0.020	mg/L	0.10	02-14-00	SW 6010
CADMIUM	0.005	mg/L	ND	02-14-00	SW 6010
HROMIUM	0.005	mg/L	ND	02-14-00	SW 6010
LEAD	0.050	mg/L	ND	02-14-00	SW 6010
SILVER	0.010	mg/L	ND	02-14-00	SW 6010
SELENIUM	0.100	mg/L	ND	02-14-00	SW 6010
MERCURY	0.002	mg/L	ND	02-15-00	SW 7470

mg/L = PARTS PER MILLION(PPM)
D = NOT DETECTED ABOVE REPORTING LIMIT

ATAS 875 Fee Fee Road • Maryland Heights, MO 63043 • (314) 434-4570 - FAX (314) 434-0080

CLIENT: DAMES & MOORE
721 EMERSON ROAD, SUITE 220
ST. LOUIS, MO 63141
ATTN: GEORGE JONES

REPORT: 2893601MT(720)

DATE : 02-16-00

SAMPLE MATRIX : WATER
ATAS # : 28936.07
DATE SUBMITTED: 02-10-00
PROJECT : #27994-022-045 - PENTAIR
SAMPLE ID : GP-6

PARAMETER	REPORTING LIMIT	UNITS	RESULTS	DATE ANALYZED	METHOD REFERENCE
			DISSOLVED METALS		
ARSENIC	0.050	mg/L	ND	02-12-00	SW 6010
BARIUM	0.020	mg/L	0.24	02-14-00	SW 6010
CADMIUM	0.005	mg/L	ND	02-14-00	SW 6010
CHROMIUM	0.005	mg/L	0.012	02-14-00	SW 6010
LEAD	0.050	mg/L	ND	02-14-00	SW 6010
SILVER	0.010	mg/L	ND	02-14-00	SW 6010
SELENIUM	0.100	mg/L	ND	02-14-00	SW 6010
MERCURY	0.002	mg/L	ND	02-15-00	SW 7470

mg/L = PARTS PER MILLION(PPM)
D = NOT DETECTED ABOVE REPORTING LIMIT

ATAS 875 Fee Fee Road • Maryland Heights, MO 63043 • (314) 434-4570 - FAX (314) 434-0080

CLIENT: DAMES & MOORE
721 EMERSON ROAD, SUITE 220
ST. LOUIS, MO 63141
ATTN: GEORGE JONES

REPORT: 2893601MT(720)

DATE : 02-16-00

SAMPLE MATRIX : WATER
ATAS # : 28936.01
DATE SUBMITTED: 02-10-00
PROJECT : #27994-022-045 - PENTAIR
SAMPLE ID : GP-3

PARAMETER	REPORTING LIMIT	UNITS	RESULTS	DATE ANALYZED	METHOD REFERENCE
			DISSOLVED METALS		
ARSENIC	0.050	mg/L	ND	02-12-00	SW 6010
BARIUM	0.020	mg/L	0.22	02-14-00	SW 6010
CADMIUM	0.005	mg/L	ND	02-14-00	SW 6010
CHROMIUM	0.005	mg/L	ND	02-14-00	SW 6010
LEAD	0.050	mg/L	ND	02-14-00	SW 6010
SILVER	0.010	mg/L	ND	02-14-00	SW 6010
SELENIUM	0.100	mg/L	ND	02-14-00	SW 6010
MERCURY	0.002	mg/L	ND	02-15-00	SW 7470

mg/L = PARTS PER MILLION(PPM)
ND = NOT DETECTED ABOVE REPORTING LIMIT

ATAS 875 Fee Fee Road • Maryland Heights, MO 63043 • (314) 434-4570 - FAX (314) 434-0080

REPORT: 2893601MT(720)

DATE : 02-16-00

CLIENT: DAMES & MOORE
721 EMERSON ROAD, SUITE 220
ST. LOUIS, MO 63141
ATTN: GEORGE JONES

SAMPLE MATRIX : WATER
ATAS # : 28936.06
DATE SUBMITTED: 02-10-00
PROJECT : #27994-022-045 - PENTAIR
SAMPLE ID : GP-2

PARAMETER	REPORTING LIMIT	UNITS	RESULTS	DATE ANALYZED	METHOD REFERENCE
			DISSOLVED METALS		
ARSENIC	0.050	mg/L	ND	02-12-00	SW 6010
BARIUM	0.020	mg/L	0.48	02-14-00	SW 6010
ADMIUM	0.005	mg/L	ND	02-14-00	SW 6010
CHROMIUM	0.005	mg/L	ND	02-14-00	SW 6010
LEAD	0.050	mg/L	ND	02-14-00	SW 6010
SILVER	0.010	mg/L	ND	02-14-00	SW 6010
SELENIUM	0.100	mg/L	ND	02-14-00	SW 6010
MERCURY	0.002	mg/L	ND	02-15-00	SW 7470

mg/L = PARTS PER MILLION(PPM)
ND = NOT DETECTED ABOVE REPORTING LIMIT

ATAS 875 Fee Fee Road • Maryland Heights, MO 63043 • (314) 434-4570 - FAX (314) 434-0080

CLIENT: DAMES & MOORE
721 EMERSON ROAD, SUITE 220
ST. LOUIS, MO 63141
ATTN: GEORGE JONES

REPORT: 2891901MT(720)
DATE : 02-17-00

SAMPLE MATRIX : WATER
ATAS # : 28919.09
DATE SUBMITTED: 02-09-00
PROJECT : #27994-022-045 - PENTAIR
SAMPLE ID : MW-11

PARAMETER	REPORTING LIMIT	UNITS	RESULTS	DATE ANALYZED	METHOD REFERENCE
			DISSOLVED METALS		
ARSENIC	0.050	mg/L	ND	02-12-00	SW 6010
BARIUM	0.020	mg/L	0.22	02-14-00	SW 6010
CADMIUM	0.005	mg/L	ND	02-14-00	SW 6010
CHROMIUM	0.005	mg/L	ND	02-14-00	SW 6010
LEAD	0.050	mg/L	ND	02-14-00	SW 6010
SILVER	0.010	mg/L	ND	02-14-00	SW 6010
SELENIUM	0.100	mg/L	ND	02-14-00	SW 6010
MERCURY	0.002	mg/L	ND	02-15-00	SW 7470

mg/L = PARTS PER MILLION(PPM)
ND = NOT DETECTED ABOVE REPORTING LIMIT

ATAS 875 Fee Fee Road • Maryland Heights, MO 63043 • (314) 434-4570 - FAX (314) 434-0080

LIENT: DAMES & MOORE
721 EMERSON ROAD, SUITE 220
ST. LOUIS, MO 63141
ATTN: GEORGE JONES

REPORT: 2891901MT(720)
DATE : 02-17-00

SAMPLE MATRIX : WATER
ATAS # : 28919.08
DATE SUBMITTED: 02-09-00
PROJECT : #27994-022-045 - PENTAIR
SAMPLE ID : MW-10

PARAMETER	REPORTING LIMIT	UNITS	RESULTS	DATE ANALYZED	METHOD REFERENCE
			DISSOLVED METALS		
ARSENIC	0.050	mg/L	ND	02-12-00	SW 6010
BARIUM	0.020	mg/L	0.13	02-14-00	SW 6010
CADMIUM	0.005	mg/L	ND	02-14-00	SW 6010
CHROMIUM	0.005	mg/L	0.005	02-14-00	SW 6010
LEAD	0.050	mg/L	ND	02-14-00	SW 6010
SILVER	0.010	mg/L	ND	02-14-00	SW 6010
SELENIUM	0.100	mg/L	ND	02-14-00	SW 6010
MERCURY	0.002	mg/L	ND	02-15-00	SW 7470

mg/L = PARTS PER MILLION(PPM)
ND = NOT DETECTED ABOVE REPORTING LIMIT

ATAS 875 Fee Fee Road • Maryland Heights, MO 63043 • (314) 434-4570 - FAX (314) 434-0080

REPORT: 2891901MT(720)

DATE : 02-17-00

CLIENT: DAMES & MOORE
721 EMERSON ROAD, SUITE 220
ST. LOUIS, MO 63141
ATTN: GEORGE JONES

SAMPLE MATRIX : WATER
ATAS # : 28919.07
DATE SUBMITTED: 02-09-00
PROJECT : #27994-022-045 - PENTAIR
SAMPLE ID : MW-8

PARAMETER	REPORTING LIMIT	UNITS	RESULTS	DATE ANALYZED	METHOD REFERENCE
			DISSOLVED METALS		
ARSENIC	0.050	mg/L	ND	02-12-00	SW 6010
BARIUM	0.020	mg/L	0.087	02-14-00	SW 6010
ADMIUM	0.005	mg/L	ND	02-14-00	SW 6010
CHROMIUM	0.005	mg/L	ND	02-14-00	SW 6010
LEAD	0.050	mg/L	ND	02-14-00	SW 6010
SILVER	0.010	mg/L	ND	02-14-00	SW 6010
SELENIUM	0.100	mg/L	ND	02-14-00	SW 6010
MERCURY	0.002	mg/L	ND	02-15-00	SW 7470

mg/L = PARTS PER MILLION(PPM)
ND = NOT DETECTED ABOVE REPORTING LIMIT

ATAS 875 Fee Fee Road • Maryland Heights, MO 63043 • (314) 434-4570 - FAX (314) 434-0080

CLIENT: DAMES & MOORE
721 EMERSON ROAD, SUITE 220
ST. LOUIS, MO 63141
ATTN: DAVID HEINZE

REPORT: 28381MT(522)

DATE : 12-10-99

SAMPLE MATRIX : WATER
ATAS # : 28381.07
DATE SUBMITTED: 11-30-99
PROJECT : PENTAIR
SAMPLE ID : MW-7

PARAMETER	REPORTING LIMIT	UNITS	RESULTS	DATE ANALYZED	METHOD REFERENCE
			METALS		
ARSENIC	0.050	mg/L	ND	12-08-99	SW 6010
BARIUM	0.020	mg/L	0.162	12-08-99	SW 6010
CADMIUM	0.010	mg/L	ND	12-08-99	SW 6010
CHROMIUM	0.010	mg/L	ND	12-08-99	SW 6010
LEAD	0.050	mg/L	ND	12-08-99	SW 6010
SILVER	0.020	mg/L	ND	12-08-99	SW 6010
SELENIUM	0.100	mg/L	ND	12-08-99	SW 6010
MERCURY	0.0002	mg/L	ND	12-06-99	SW 7470

mg/L = PARTS PER MILLION(PPM)
ND = NOT DETECTED ABOVE REPORTING LIMIT

ATAS 875 Fee Fee Road • Maryland Heights, MO 63043 • (314) 434-4570 - FAX (314) 434-0080

CLIENT: DAMES & MOORE
721 EMERSON ROAD, SUITE 220
ST. LOUIS, MO 63141
ATTN: DAVID HEINZE

REPORT: 28381MT(522)

DATE : 12-10-99

SAMPLE MATRIX : WATER
ATAS # : 28381.06
DATE SUBMITTED: 11-30-99
PROJECT : PENTAIR
SAMPLE ID : MW-6

PARAMETER	REPORTING LIMIT	UNITS	RESULTS	DATE ANALYZED	METHOD REFERENCE
			METALS		
ARSENIC	0.050	mg/L	ND	12-08-99	SW 6010
BARIUM	0.020	mg/L	0.049	12-08-99	SW 6010
CADMIUM	0.010	mg/L	ND	12-08-99	SW 6010
CHROMIUM	0.010	mg/L	ND	12-08-99	SW 6010
LEAD	0.050	mg/L	ND	12-08-99	SW 6010
SILVER	0.020	mg/L	ND	12-08-99	SW 6010
SELENIUM	0.100	mg/L	ND	12-08-99	SW 6010
MERCURY	0.0002	mg/L	ND	12-06-99	SW 7470

mg/L = PARTS PER MILLION (PPM)
- NOT DETECTED ABOVE REPORTING LIMIT

ATAS 875 Fee Fee Road • Maryland Heights, MO 63043 • (314) 434-4570 - FAX (314) 434-0080

LIENT: DAMES & MOORE
721 EMERSON ROAD, SUITE 220
ST. LOUIS, MO 63141
ATTN: DAVID HEINZE

REPORT: 28381MT(522)

DATE : 12-10-99

SAMPLE MATRIX : WATER
ATAS # : 28381.05
DATE SUBMITTED: 11-30-99
PROJECT : PENTAIR
SAMPLE ID : MW-5

PARAMETER	REPORTING LIMIT	UNITS	RESULTS	DATE ANALYZED	METHOD REFERENCE
			METALS		
ARSENIC	0.050	mg/L	ND	12-08-99	SW 6010
BARIUM	0.020	mg/L	0.064	12-08-99	SW 6010
CADMIUM	0.010	mg/L	ND	12-08-99	SW 6010
ROMIUM	0.010	mg/L	ND	12-08-99	SW 6010
EAD	0.050	mg/L	ND	12-08-99	SW 6010
SILVER	0.020	mg/L	ND	12-08-99	SW 6010
SELENIUM	0.100	mg/L	ND	12-08-99	SW 6010
MERCURY	0.0002	mg/L	ND	12-06-99	SW 7470

mg/L = PARTS PER MILLION(PPM)
— = NOT DETECTED ABOVE REPORTING LIMIT

ATAS 875 Fee Fee Road • Maryland Heights, MO 63043 • (314) 434-4570 - FAX (314) 434-0080

.IENT: DAMES & MOORE
721 EMERSON ROAD, SUITE 220
ST. LOUIS, MO 63141
ATTN: DAVID HEINZE

REPORT: 28381MT(522)

DATE : 12-10-99

SAMPLE MATRIX : WATER
ATAS # : 28381.04
DATE SUBMITTED: 11-30-99
PROJECT : PENTAIR
SAMPLE ID : MW-4

PARAMETER	REPORTING LIMIT	UNITS	RESULTS	DATE ANALYZED	METHOD REFERENCE
			METALS		
ARSENIC	0.050	mg/L	ND	12-08-99	SW 6010
BARIUM	0.020	mg/L	0.047	12-08-99	SW 6010
CADMIUM	0.010	mg/L	ND	12-08-99	SW 6010
'ROMIUM	0.010	mg/L	ND	12-08-99	SW 6010
.AD	0.050	mg/L	ND	12-08-99	SW 6010
SILVER	0.020	mg/L	ND	12-08-99	SW 6010
SELENIUM	0.100	mg/L	ND	12-08-99	SW 6010
MERCURY	0.0002	mg/L	ND	12-06-99	SW 7470

mg/L = PARTS PER MILLION(PPM)
ND = NOT DETECTED ABOVE REPORTING LIMIT

ATAS 875 Fee Fee Road • Maryland Heights, MO 63043 • (314) 434-4570 - FAX (314) 434-0080

.IENT: DAMES & MOORE
721 EMERSON ROAD, SUITE 220
ST. LOUIS, MO 63141
ATTN: DAVID HEINZE

REPORT: 28381MT(522)

DATE : 12-10-99

SAMPLE MATRIX : WATER
ATAS # : 28381.03
DATE SUBMITTED: 11-30-99
PROJECT : PENTAIR
SAMPLE ID : MW-3

PARAMETER	REPORTING LIMIT	UNITS	RESULTS	DATE ANALYZED	METHOD REFERENCE
			METALS		
ARSENIC	0.050	mg/L	ND	12-08-99	SW 6010
BARIUM	0.020	mg/L	0.064	12-08-99	SW 6010
CADMIUM	0.010	mg/L	ND	12-08-99	SW 6010
ROMIUM	0.010	mg/L	ND	12-08-99	SW 6010
LEAD	0.050	mg/L	ND	12-08-99	SW 6010
SILVER	0.020	mg/L	ND	12-08-99	SW 6010
SELENIUM	0.100	mg/L	ND	12-08-99	SW 6010
MERCURY	0.0002	mg/L	ND	12-06-99	SW 7470

mg/L = PARTS PER MILLION(PPM)
= NOT DETECTED ABOVE REPORTING LIMIT

ATAS 875 Fee Fee Road • Maryland Heights, MO 63043 • (314) 434-4570 - FAX (314) 434-0080

CLIENT: DAMES & MOORE
721 EMERSON ROAD, SUITE 220
ST. LOUIS, MO 63141
ATTN: DAVID HEINZE

REPORT: 28381MT(522)
DATE : 12-10-99

SAMPLE MATRIX : WATER
ATAS # : 28381.02
DATE SUBMITTED: 11-30-99
PROJECT : PENTAIR
SAMPLE_ID : MW-2

PARAMETER	REPORTING LIMIT	UNITS	RESULTS	DATE ANALYZED	METHOD REFERENCE
			METALS		
ARSENIC	0.050	mg/L	ND	12-08-99	SW 6010
BARIUM	0.020	mg/L	0.214	12-08-99	SW 6010
CADMIUM	0.010	mg/L	ND	12-08-99	SW 6010
CHROMIUM	0.010	mg/L	ND	12-08-99	SW 6010
LEAD	0.050	mg/L	ND	12-08-99	SW 6010
SILVER	0.020	mg/L	ND	12-08-99	SW 6010
SELENIUM	0.100	mg/L	ND	12-08-99	SW 6010
MERCURY	0.0002	mg/L	ND	12-06-99	SW 7470

mg/L = PARTS PER MILLION(PPM)
ND = NOT DETECTED ABOVE REPORTING LIMIT

ATAS 875 Fee Fee Road • Maryland Heights, MO 63043 • (314) 434-4570 - FAX (314) 434-0080

CLIENT: DAMES & MOORE
721 EMERSON ROAD, SUITE 220
ST. LOUIS, MO 63141
ATTN: DAVID HEINZE

REPORT: 28381MT(522)

DATE : 12-10-99

SAMPLE MATRIX : WATER
ATAS # : 28381.01
DATE SUBMITTED: 11-30-99
PROJECT : PENTAIR
SAMPLE ID : MW-1

PARAMETER	REPORTING LIMIT	UNITS	RESULTS	DATE ANALYZED	METHOD REFERENCE
			METALS		
ARSENIC	0.050	mg/L	ND	12-08-99	SW 6010
BARIUM	0.020	mg/L	0.223	12-08-99	SW 6010
CADMIUM	0.010	mg/L	ND	12-08-99	SW 6010
CHROMIUM	0.010	mg/L	ND	12-08-99	SW 6010
LEAD	0.050	mg/L	ND	12-08-99	SW 6010
SILVER	0.020	mg/L	ND	12-08-99	SW 6010
SELENIUM	0.100	mg/L	ND	12-08-99	SW 6010
MERCURY	0.0002	mg/L	ND	12-06-99	SW 7470

mg/L = PARTS PER MILLION(PPM)
) = NOT DETECTED ABOVE REPORTING LIMIT

ATAS 875 Fee Fee Road • Maryland Heights, MO 63043 • (314) 434-4570 - FAX (314) 434-0080

C"ENT: DAMES & MOORE
721 EMERSON ROAD, SUITE 220
ST. LOUIS, MO 63141
ATTN: GEORGE JONES

REPORT: 2893601TP(720)

DATE : 02-16-00

SAMPLE MATRIX : WATER
ATAS # : 28936.08
DATE SUBMITTED: 02-10-00
PROJECT : #27994-022-045 - PENTAIR
SAMPLE ID : GP-14

PARAMETER	REPORTING LIMIT	RESULTS	DATE EXTRACTED	DATE ANALYZED
TOTAL EXTRACTABLE HYDROCARBONS (OA-2/8015)				
RESULTS REPORTED IN mg/L OR PARTS PER MILLION(PPM)				
GASOLINE C6-C14	0.118	ND	02-11-00	02-15-00
MINERAL SPIRITS C7-C14	0.118	ND	02-11-00	02-15-00
KEROSENE C9-C16	0.118	ND	02-11-00	02-15-00
DIESEL C7-C26	0.118	ND	02-11-00	02-15-00
#6 FUEL OIL C10-C32	0.118	ND	02-11-00	02-15-00
HYDRAULIC FLUID C12-C33	0.118	ND	02-11-00	02-15-00
OR OIL C16-C33	0.118	ND	02-11-00	02-15-00
MISCELLANEOUS (1)	0.118	2.34	02-11-00	02-15-00
MISCELLANEOUS (2)	0.118	4.75	02-11-00	02-15-00

QA/QC SURROGATE RECOVERY

P-TERPHENYL D14 I %

(1) = ANALYSIS SHOWS PEAKS WHICH CANNOT BE MATCHED TO ANY HYDROCARBON STANDARD LISTED ABOVE. THE PATTERN IS MOST SIMILAR TO THE DIESEL FUEL AND WAS QUANTITATED FROM THAT STANDARD.
= ANALYSIS SHOWS PEAKS WHICH CANNOT BE MATCHED TO ANY HYDROCARBON STANDARD LISTED ABOVE. THE PATTERN IS MOST SIMILAR TO HYDRAULIC FLUID AND WAS QUANTITATED FROM THAT STANDARD.
ND = NOT DETECTED ABOVE REPORTING LIMIT
* = OUTSIDE QC LIMIT
I = NOT QUANTIFIABLE DUE TO MATRIX INTERFERENCE

ATAS 875 Fee Fee Road • Maryland Heights, MO 63043 • (314) 434-4570 - FAX (314) 434-0080

REPORT: 2893601TP(720)

C NT: DAMES & MOORE
721 EMERSON ROAD, SUITE 220
ST. LOUIS, MO 63141
ATTN: GEORGE JONES

DATE : 02-16-00

SAMPLE MATRIX : WATER
ATAS # : 28936.05
DATE SUBMITTED: 02-10-00
PROJECT : #27994-022-045 - PENTAIR
SAMPLE ID : GP-12

PARAMETER	REPORTING LIMIT	RESULTS	DATE EXTRACTED	DATE ANALYZED
TOTAL EXTRACTABLE HYDROCARBONS (QA-2/8015)				
RESULTS REPORTED IN mg/L OR PARTS PER MILLION(PPM)				
GASOLINE C6-C14	0.100	ND	02-11-00	02-15-00
MINERAL SPIRITS C7-C14	0.100	1.21	02-11-00	02-15-00
KEROSENE C9-C16	0.100	ND	02-11-00	02-15-00
DIESEL C7-C26	0.100	ND	02-11-00	02-15-00
#6 FUEL OIL C10-C32	0.100	ND	02-11-00	02-15-00
HYDRAULIC FLUID C12-C33	0.100	ND	02-11-00	02-15-00
MOTOR OIL C16-C33	0.100	ND	02-11-00	02-15-00
MISCELLANEOUS (1)	0.100	3.67	02-11-00	02-15-00
MISCELLANEOUS (2)	0.100	8.22	02-11-00	02-15-00

QA/QC SURROGATE RECOVERY

P-TERPHENYL D14 I %

* = ANALYSIS SHOWS PEAKS WHICH CANNOT BE MATCHED TO ANY HYDROCARBON STANDARD LISTED ABOVE. THE PATTERN IS MOST SIMILAR TO THE DIESEL FUEL AND WAS QUANTITATED FROM THAT STANDARD.

(2) = ANALYSIS SHOWS PEAKS WHICH CANNOT BE MATCHED TO ANY HYDROCARBON STANDARD LISTED ABOVE. THE PATTERN IS MOST SIMILAR TO HYDRAULIC FLUID AND WAS QUANTITATED FROM THAT STANDARD.

ND = NOT DETECTED ABOVE REPORTING LIMIT

* = OUTSIDE QC LIMIT

I = NOT QUANTIFIABLE DUE TO MATRIX INTERFERENCE

ATAS 875 Fee Fee Road • Maryland Heights, MO 63043 • (314) 434-4570 - FAX (314) 434-0080

C NT: DAMES & MOORE
721 EMERSON ROAD, SUITE 220
ST. LOUIS, MO 63141
ATTN: GEORGE JONES

REPORT: 2893601TP(720)
DATE : 02-16-00

SAMPLE MATRIX : WATER
ATAS # : 28936.03
DATE SUBMITTED: 02-10-00
PROJECT : #27994-022-045 - PENTAIR
SAMPLE ID : GP-11

PARAMETER	REPORTING LIMIT	RESULTS	DATE EXTRACTED	DATE ANALYZED
TOTAL EXTRACTABLE HYDROCARBONS (OA-2/8015)				
RESULTS REPORTED IN mg/L OR PARTS PER MILLION(PPM)				
GASOLINE C6-C14	50.0	ND	02-11-00	02-15-00
MINERAL SPIRITS C7-C14	50.0	801	02-11-00	02-15-00
KEROSENE C9-C16	50.0	ND	02-11-00	02-15-00
DIESEL C7-C26	50.0	ND	02-11-00	02-15-00
#6 FUEL OIL C10-C32	50.0	ND	02-11-00	02-15-00
HYDRAULIC FLUID C12-C33	50.0	ND	02-11-00	02-15-00
MOTOR OIL C16-C33	50.0	ND	02-11-00	02-15-00
MISCELLANEOUS (1)	50.0	1900	02-11-00	02-15-00

QA/QC SURROGATE RECOVERY

P-TERPHENYL D14 D %

(1) = ANALYSIS SHOWS PEAKS WHICH CANNOT BE MATCHED TO ANY HYDROCARBON STANDARD LISTED ABOVE. THE PATTERN IS MOST SIMILAR TO HYDRAULIC FLUID AND WAS QUANTITATED FROM THAT STANDARD.
ND = NOT DETECTED ABOVE REPORTING LIMIT
* = OUTSIDE QC LIMIT
D = DILUTED OUT

ATAS 875 Fee Fee Road • Maryland Heights, MO 63043 • (314) 434-4570 - FAX (314) 434-0080

REPORT: 2893601TP(720)

DATE : 02-16-00

C NT: DAMES & MOORE
721 EMERSON ROAD, SUITE 220
ST. LOUIS, MO 63141
ATTN: GEORGE JONES

SAMPLE MATRIX : WATER
ATAS # : 28936.02
DATE SUBMITTED: 02-10-00
PROJECT : #27994-022-045 - PENTAIR
SAMPLE ID : GP-10

PARAMETER	REPORTING LIMIT	RESULTS	DATE EXTRACTED	DATE ANALYZED
TOTAL EXTRACTABLE HYDROCARBONS (OA-2/8015)				
RESULTS REPORTED IN mg/L OR PARTS PER MILLION(PPM)				
GASOLINE C6-C14	20.0	ND	02-11-00	02-15-00
MINERAL SPIRITS C7-C14	20.0	201	02-11-00	02-15-00
KEROSENE C9-C16	20.0	ND	02-11-00	02-15-00
DIESEL C7-C26	20.0	ND	02-11-00	02-15-00
#6 FUEL OIL C10-C32	20.0	ND	02-11-00	02-15-00
HYDRAULIC FLUID C12-C33	20.0	ND	02-11-00	02-15-00
LUBOR OIL C16-C33	20.0	ND	02-11-00	02-15-00
MISCELLANEOUS (1)	20.0	641	02-11-00	02-15-00

QA/QC SURROGATE RECOVERY

P-TERPHENYL D14 D %

(1) = ANALYSIS SHOWS PEAKS WHICH CANNOT BE MATCHED TO ANY HYDROCARBON STANDARD LISTED ABOVE. THE PATTERN IS MOST SIMILAR TO HYDRAULIC FLUID AND WAS QUANTITATED FROM THAT STANDARD.
ND = NOT DETECTED ABOVE REPORTING LIMIT
* = OUTSIDE QC LIMIT
D = DILUTED OUT

ATAS 875 Fee Fee Road • Maryland Heights, MO 63043 • (314) 434-4570 - FAX (314) 434-0080

TENT: DAMES & MOORE
721 EMERSON ROAD, SUITE 220
ST. LOUIS, MO 63141
ATTN: GEORGE JONES

REPORT: 2893601TP(720)
DATE : 02-16-00

SAMPLE MATRIX : WATER
ATAS # : 28936.04
DATE SUBMITTED: 02-10-00
PROJECT : #27994-022-045 - PENTAIR
SAMPLE ID : GP-9

PARAMETER	REPORTING LIMIT	RESULTS	DATE EXTRACTED	DATE ANALYZED
TOTAL EXTRACTABLE HYDROCARBONS (OA-2/8015)				
RESULTS REPORTED IN mg/L OR PARTS PER MILLION (PPM)				
GASOLINE C6-C14	0.100	ND	02-11-00	02-15-00
MINERAL SPIRITS C7-C14	0.100	ND	02-11-00	02-15-00
KEROSENE C9-C16	0.100	ND	02-11-00	02-15-00
DIESEL C7-C26	0.100	ND	02-11-00	02-15-00
#6 FUEL OIL C10-C32	0.100	ND	02-11-00	02-15-00
HYDRAULIC FLUID C12-C33	0.100	ND	02-11-00	02-15-00
MOTOR OIL C16-C33	0.100	ND	02-11-00	02-15-00
MISCELLANEOUS (1)	0.100	1.29	02-11-00	02-15-00

QA/QC SURROGATE RECOVERY

P-TERPHENYL D14 I %

(1) = ANALYSIS SHOWS PEAKS WHICH CANNOT BE MATCHED TO ANY HYDROCARBON STANDARD LISTED ABOVE. THE PATTERN IS MOST SIMILAR TO HYDRAULIC FLUID AND WAS QUANTITATED FROM THAT STANDARD.
ND = NOT DETECTED ABOVE REPORTING LIMIT
* = OUTSIDE QC LIMIT
I = NOT QUANTIFIABLE DUE TO MATRIX INTERFERENCE

ATAS 875 Fee Fee Road • Maryland Heights, MO 63043 • (314) 434-4570 - FAX (314) 434-0080

REPORT: 2893601TP(720)

DATE : 02-16-00

ENT: DAMES & MOORE
721 EMERSON ROAD, SUITE 220
ST. LOUIS, MO 63141
ATTN: GEORGE JONES

SAMPLE MATRIX : WATER
ATAS # : 28936.07
DATE SUBMITTED: 02-10-00
PROJECT : #27994-022-045 - PENTAIR
SAMPLE ID : GP-6

PARAMETER	REPORTING LIMIT	RESULTS	DATE EXTRACTED	DATE ANALYZED
TOTAL EXTRACTABLE HYDROCARBONS (OA-2/8015)				
RESULTS REPORTED IN mg/L OR PARTS PER MILLION(PPM)				
GASOLINE C6-C14	0.133	ND	02-11-00	02-15-00
MINERAL SPIRITS C7-C14	0.133	ND	02-11-00	02-15-00
KEROSENE C9-C16	0.133	ND	02-11-00	02-15-00
DIESEL C7-C26	0.133	ND	02-11-00	02-15-00
#6 FUEL OIL C10-C32	0.133	ND	02-11-00	02-15-00
DRAULIC FLUID C12-C33	0.133	ND	02-11-00	02-15-00
TOR OIL C16-C33	0.133	ND	02-11-00	02-15-00
MISCELLANEOUS (1)	0.133	0.836	02-11-00	02-15-00

QA/QC SURROGATE RECOVERY

P-TERPHENYL D14 I %

(1) = ANALYSIS SHOWS PEAKS WHICH CANNOT BE MATCHED TO ANY HYDROCARBON STANDARD LISTED ABOVE. THE PATTERN IS MOST SIMILAR TO HYDRAULIC FLUID AND WAS QUANTITATED FROM THAT STANDARD.
ND = NOT DETECTED ABOVE REPORTING LIMIT
* = OUTSIDE QC LIMIT
I = NOT QUANTIFIABLE DUE TO MATRIX INTERFERENCE

ATAS 875 Fee Fee Road • Maryland Heights, MO 63043 • (314) 434-4570 - FAX (314) 434-0080

TENT: DAMES & MOORE
721 EMERSON ROAD, SUITE 220
ST. LOUIS, MO 63141
ATTN: GEORGE JONES

REPORT: 2893601TP(720)
DATE : 02-16-00

SAMPLE MATRIX : WATER
ATAS # : 28936.01
DATE SUBMITTED: 02-10-00
PROJECT : #27994-022-045 - PENTAIR
SAMPLE ID : GP-3

PARAMETER	REPORTING LIMIT	RESULTS	DATE EXTRACTED	DATE ANALYZED
TOTAL EXTRACTABLE HYDROCARBONS (OA-2/8015)				
RESULTS REPORTED IN mg/L OR PARTS PER MILLION(PPM)				
GASOLINE C6-C14	0.100	ND	02-11-00	02-15-00
MINERAL SPIRITS C7-C14	0.100	ND	02-11-00	02-15-00
KEROSENE C9-C16	0.100	ND	02-11-00	02-15-00
DIESEL C7-C26	0.100	ND	02-11-00	02-15-00
#6 FUEL OIL C10-C32	0.100	ND	02-11-00	02-15-00
HYDRAULIC FLUID C12-C33	0.100	ND	02-11-00	02-15-00
MOTOR OIL C16-C33	0.100	ND	02-11-00	02-15-00
MISCELLANEOUS (1)	0.100	0.618	02-11-00	02-15-00
MISCELLANEOUS (2)	0.100	1.30	02-11-00	02-15-00

QA/QC SURROGATE RECOVERY

P-TERPHENYL D14 I %

(1) = ANALYSIS SHOWS PEAKS WHICH CANNOT BE MATCHED TO ANY HYDROCARBON STANDARD LISTED ABOVE. THE PATTERN IS MOST SIMILAR TO THE DIESEL FUEL AND WAS QUANTITATED FROM THAT STANDARD.
(2) = ANALYSIS SHOWS PEAKS WHICH CANNOT BE MATCHED TO ANY HYDROCARBON STANDARD LISTED ABOVE. THE PATTERN IS MOST SIMILAR TO HYDRAULIC FLUID AND WAS QUANTITATED FROM THAT STANDARD.
ND = NOT DETECTED ABOVE REPORTING LIMIT
* = OUTSIDE QC LIMIT
I = NOT QUANTIFIABLE DUE TO MATRIX INTERFERENCE

ATAS 875 Fee Fee Road • Maryland Heights, MO 63043 • (314) 434-4570 - FAX (314) 434-0080

REPORT: 2893601TP(720)

DATE : 02-16-00

ENT: DAMES & MOORE
721 EMERSON ROAD, SUITE 220
ST. LOUIS, MO 63141
ATTN: GEORGE JONES

SAMPLE MATRIX : WATER
ATAS # : 28936.06
DATE SUBMITTED: 02-10-00
PROJECT : #27994-022-045 - PENTAIR
SAMPLE ID : GP-2

PARAMETER	REPORTING LIMIT	RESULTS	DATE EXTRACTED	DATE ANALYZED
TOTAL EXTRACTABLE HYDROCARBONS (OA-2/8015)				
RESULTS REPORTED IN mg/L OR PARTS PER MILLION(PPM)				
GASOLINE C6-C14	0.100	ND	02-11-00	02-15-00
MINERAL SPIRITS C7-C14	0.100	1.68	02-11-00	02-15-00
KEROSENE C9-C16	0.100	ND	02-11-00	02-15-00
DIESEL C7-C26	0.100	ND	02-11-00	02-15-00
#6 FUEL OIL C10-C32	0.100	ND	02-11-00	02-15-00
HYDRAULIC FLUID C12-C33	0.100	ND	02-11-00	02-15-00
MOTOR OIL C16-C33	0.100	ND	02-11-00	02-15-00
MISCELLANEOUS (1)	0.100	8.65	02-11-00	02-15-00

QA/QC SURROGATE RECOVERY

P-TERPHENYL D14 I %

(1) = ANALYSIS SHOWS PEAKS WHICH CANNOT BE MATCHED TO ANY HYDROCARBON STANDARD LISTED ABOVE. THE PATTERN IS MOST SIMILAR TO HYDRAULIC FLUID AND WAS QUANTITATED FROM THAT STANDARD.
ND = NOT DETECTED ABOVE REPORTING LIMIT
* = OUTSIDE QC LIMIT
I = NOT QUANTIFIABLE DUE TO MATRIX INTERFERENCE

ATAS 875 Fee Fee Road • Maryland Heights, MO 63043 • (314) 434-4570 - FAX (314) 434-0080

CLIENT: DAMES & MOORE
721 EMERSON ROAD, SUITE 220
ST. LOUIS, MO 63141
ATTN: GEORGE JONES

REPORT: 2891901TP(720)

DATE : 02-17-00

SAMPLE MATRIX : WATER
ATAS # : 28919.09
DATE SUBMITTED: 02-09-00
PROJECT : #27994-022-045 - PENTAIR
SAMPLE ID : MW-11

PARAMETER	REPORTING LIMIT	RESULTS	DATE EXTRACTED	DATE ANALYZED
TOTAL EXTRACTABLE HYDROCARBONS (OA-2/8015)				
RESULTS REPORTED IN mg/L OR PARTS PER MILLION(PPM)				
GASOLINE C6-C14	0.100	ND	02-10-00	02-10-00
MINERAL SPIRITS C7-C14	0.100	ND	02-10-00	02-10-00
KEROSENE C9-C16	0.100	ND	02-10-00	02-10-00
DIESEL C7-C26	0.100	ND	02-10-00	02-10-00
#6 FUEL OIL C10-C32	0.100	ND	02-10-00	02-10-00
HYDRAULIC FLUID C12-C33	0.100	ND	02-10-00	02-10-00
TOR OIL C16-C33	0.100	ND	02-10-00	02-10-00

QA/QC SURROGATE RECOVERY

P-TERPHENYL D14 56 %

ND = NOT DETECTED ABOVE REPORTING LIMIT
* = OUTSIDE QC LIMIT
I = NOT QUANTIFIABLE DUE TO MATRIX INTERFERENCE

ATAS 875 Fee Fee Road • Maryland Heights, MO 63043 • (314) 434-4570 - FAX (314) 434-0080

CLIENT: DAMES & MOORE
721 EMERSON ROAD, SUITE 220
ST. LOUIS, MO 63141
ATTN: GEORGE JONES

REPORT: 2891901TP(720)
DATE : 02-17-00

SAMPLE MATRIX : WATER
ATAS # : 28919.08
DATE SUBMITTED: 02-09-00
PROJECT : #27994-022-045 - PENTAIR
SAMPLE ID : MW-10

PARAMETER	REPORTING LIMIT	RESULTS	DATE EXTRACTED	DATE ANALYZED
TOTAL EXTRACTABLE HYDROCARBONS (OA-2/8015)				
RESULTS REPORTED IN mg/L OR PARTS PER MILLION(PPM)				
GASOLINE C6-C14	0.100	ND	02-10-00	02-10-00
MINERAL SPIRITS C7-C14	0.100	ND	02-10-00	02-10-00
KEROSENE C9-C16	0.100	ND	02-10-00	02-10-00
DIESEL C7-C26	0.100	ND	02-10-00	02-10-00
#6 FUEL OIL C10-C32	0.100	ND	02-10-00	02-10-00
HYDRAULIC FLUID C12-C33	0.100	ND	02-10-00	02-10-00
OR OIL C16-C33	0.100	ND	02-10-00	02-10-00

QA/QC SURROGATE RECOVERY

P-TERPHENYL D14 44 %

ND = NOT DETECTED ABOVE REPORTING LIMIT
* = OUTSIDE QC LIMIT
I = NOT QUANTIFIABLE DUE TO MATRIX INTERFERENCE

ATAS 875 Fee Fee Road • Maryland Heights, MO 63043 • (314) 434-4570 - FAX (314) 434-0080

C NT: DAMES & MOORE
721 EMERSON ROAD, SUITE 220
ST. LOUIS, MO 63141
ATTN: GEORGE JONES

REPORT: 2891901TP(720)

DATE : 02-17-00

SAMPLE MATRIX : WATER
ATAS # : 28919.07
DATE SUBMITTED: 02-09-00
PROJECT : #27994-022-045 - PENTAIR
SAMPLE ID : MW-8

PARAMETER	REPORTING LIMIT	RESULTS	DATE EXTRACTED	DATE ANALYZED
TOTAL EXTRACTABLE HYDROCARBONS (OA-2/8015)				
RESULTS REPORTED IN mg/L OR PARTS PER MILLION(PPM)				
GASOLINE C6-C14	0.100	ND	02-10-00	02-10-00
MINERAL SPIRITS C7-C14	0.100	ND	02-10-00	02-10-00
KEROSENE C9-C16	0.100	ND	02-10-00	02-10-00
DIESEL C7-C26	0.100	ND	02-10-00	02-10-00
#6 FUEL OIL C10-C32	0.100	ND	02-10-00	02-10-00
I RAULIC FLUID C12-C33	0.100	ND	02-10-00	02-10-00
MOTOR OIL C16-C33	0.100	ND	02-10-00	02-10-00

QA/QC SURROGATE RECOVERY

P-TERPHENYL D14 80 %

ND = NOT DETECTED ABOVE REPORTING LIMIT
* = OUTSIDE QC LIMIT
I = NOT QUANTIFIABLE DUE TO MATRIX INTERFERENCE

ATAS 875 Fee Fee Road • Maryland Heights, MO 63043 • (314) 434-4570 - FAX (314) 434-0080

:LIENT: DAMES & MOORE
721 EMERSON ROAD, SUITE 220
ST. LOUIS, MO 63141
ATTN: DAVID HEINZE

REPORT: 283810A2(522)
DATE : 12-10-99

SAMPLE MATRIX : WATER
ATAS # : 28381.07
DATE RECEIVED : 11-30-99
DATE EXTRACTED : 12-01-99
DATE ANALYZED : 12-02-99
METHOD REFERENCE: OA-2
PROJECT : PENTAIR
SAMPLE ID : MW-7

RESULTS REPORTED IN mg/L OR PARTS PER MILLION(PPM)

PARAMETER	REPORTING LIMIT	UNIT	RESULTS
TOTAL EXTRACTABLE HYDROCARBONS			
GASOLINE C6-C14	0.100	mg/L	ND
MINERAL SPIRITS C7-C14	0.100	mg/L	ND
CF GENE C9-C16	0.100	mg/L	ND
DI SL C7-C26	0.100	mg/L	ND
#6 FUEL OIL C10-C32	0.100	mg/L	ND
HYDRAULIC FLUID C12-C33	0.100	mg/L	ND
MOTOR OIL C16-C33	0.100	mg/L	ND

QA/QC SURROGATE RECOVERY

P-TERPHENYL D14(33-121) 53 %

ND = NOT DETECTED ABOVE REPORTING LIMIT
I NOT QUANTIFIABLE DUE TO MATRIX INTERFERENCE

ATAS 875 Fee Fee Road • Maryland Heights, MO 63043 • (314) 434-4570 - FAX (314) 434-0080

CLIENT: DAMES & MOORE
721 EMERSON ROAD, SUITE 220
ST. LOUIS, MO 63141
ATTN: DAVID HEINZE

REPORT: 28381OA2(522)

DATE : 12-10-99

SAMPLE MATRIX : WATER
ATAS # : 28381.06
DATE RECEIVED : 11-30-99
DATE EXTRACTED : 12-01-99
DATE ANALYZED : 12-02-99
METHOD REFERENCE: OA-2
PROJECT - : PENTAIR
SAMPLE ID : MW-6

RESULTS REPORTED IN mg/L OR PARTS PER MILLION(PPM)

PARAMETER	REPORTING LIMIT	UNIT	RESULTS
TOTAL EXTRACTABLE HYDROCARBONS			
GASOLINE C6-C14	0.100	mg/L	ND
MINERAL SPIRITS C7-C14	0.100	mg/L	ND
KEROSENE C9-C16	0.100	mg/L	ND
DIESEL C7-C26	0.100	mg/L	ND
#6 FUEL OIL C10-C32	0.100	mg/L	ND
HYDRAULIC FLUID C12-C33	0.100	mg/L	ND
MOTOR OIL C16-C33	0.100	mg/L	ND

QA/QC SURROGATE RECOVERY

P-TERPHENYL D14(33-121) 43 %

ND NOT DETECTED ABOVE REPORTING LIMIT
1 = NOT QUANTIFIABLE DUE TO MATRIX INTERFERENCE

ATAS 875 Fee Fee Road • Maryland Heights, MO 63043 • (314) 434-4570 - FAX (314) 434-0080

CLIENT: DAMES & MOORE
721 EMERSON ROAD, SUITE 220
ST. LOUIS, MO 63141
ATTN: DAVID HEINZE

REPORT: 28381OA2(522)

DATE : 12-10-99

SAMPLE MATRIX : WATER
ATAS # : 28381.05
DATE RECEIVED : 11-30-99
DATE EXTRACTED : 12-01-99
DATE ANALYZED : 12-02-99
METHOD REFERENCE: OA-2
PROJECT : PENTAIR
SAMPLE ID : MW-5

RESULTS REPORTED IN mg/L OR PARTS PER MILLION(PPM)

PARAMETER	REPORTING LIMIT	UNIT	RESULTS
TOTAL EXTRACTABLE HYDROCARBONS			
GASOLINE C6-C14	0.200	mg/L	ND
MINERAL SPIRITS C7-C14	0.200	mg/L	ND
K SENE C9-C16	0.200	mg/L	ND
D SEL C7-C26	0.200	mg/L	ND
#6 FUEL OIL C10-C32	0.200	mg/L	ND
HYDRAULIC FLUID C12-C33	0.200	mg/L	ND
MOTOR OIL C16-C33	0.200	mg/L	ND

QA/QC SURROGATE RECOVERY

P-TERPHENYL D14(33-121) 23 %

ND = NOT DETECTED ABOVE REPORTING LIMIT
= NOT QUANTIFIABLE DUE TO MATRIX INTERFERENCE

ATAS 875 Fee Fee Road • Maryland Heights, MO 63043 • (314) 434-4570 - FAX (314) 434-0080

CLIENT: DAMES & MOORE
721 EMERSON ROAD, SUITE 220
ST. LOUIS, MO 63141
ATTN: DAVID HEINZE

REPORT: 28381OA2(522)

DATE : 12-10-99

SAMPLE MATRIX : WATER
ATAS # : 28381.04
DATE RECEIVED : 11-30-99
DATE EXTRACTED : 12-01-99
DATE ANALYZED : 12-01-99
METHOD REFERENCE: OA-2
PROJECT : PENTAIR
SAMPLE ID : MW-4

RESULTS REPORTED IN mg/L OR PARTS PER MILLION(PPM)

PARAMETER	REPORTING LIMIT	UNIT	RESULTS
TOTAL EXTRACTABLE HYDROCARBONS			
GASOLINE C6-C14	0.100	mg/L	ND
MINERAL SPIRITS C7-C14	0.100	mg/L	ND
K OSENE C9-C16	0.100	mg/L	ND
L SEL C7-C26	0.100	mg/L	ND
#6 FUEL OIL C10-C32	0.100	mg/L	ND
HYDRAULIC FLUID C12-C33	0.100	mg/L	ND
MOTOR OIL C16-C33	0.100	mg/L	ND
MISCELLANEOUS (1)	0.100	mg/L	0.168

QA/QC SURROGATE RECOVERY

P-TERPHENYL D14(33-121) 29 %

(1) = ANALYSIS SHOWS PEAKS WHICH CANNOT BE MATCHED TO ANY HYDROCARBON STANDARD LISTED ABOVE. THE PATTERN IS MOST SIMILAR TO DIESEL FUEL AND WAS QUANTITATED FROM THAT STANDARD.
ND = NOT DETECTED ABOVE REPORTING LIMIT
= NOT QUANTIFIABLE DUE TO MATRIX INTERFERENCE

ATAS 875 Fee Fee Road • Maryland Heights, MO 63043 • (314) 434-4570 - FAX (314) 434-0080

CLIENT: DAMES & MOORE
721 EMERSON ROAD, SUITE 220
ST. LOUIS, MO 63141
ATTN: DAVID HEINZE

REPORT: 28381OA2(522)

DATE : 12-10-99

SAMPLE MATRIX : WATER
ATAS # : 28381.03
DATE RECEIVED : 11-30-99
DATE EXTRACTED : 12-01-99
DATE ANALYZED : 12-01-99
METHOD REFERENCE: OA-2
PROJECT - : PENTAIR
SAMPLE ID : MW-3

RESULTS REPORTED IN mg/L OR PARTS PER MILLION(PPM)

PARAMETER	REPORTING LIMIT	UNIT	RESULTS
TOTAL EXTRACTABLE HYDROCARBONS			
GASOLINE C6-C14	0.100	mg/L	ND
MINERAL SPIRITS C7-C14	0.100	mg/L	ND
KEROSENE C9-C16	0.100	mg/L	ND
DIESEL C7-C26	0.100	mg/L	ND
#6 FUEL OIL C10-C32	0.100	mg/L	ND
HYDRAULIC FLUID C12-C33	0.100	mg/L	ND
MOTOR OIL C16-C33	0.100	mg/L	ND

QA/QC SURROGATE RECOVERY

P-TERPHENYL D14(33-121) 41 %

ND = NOT DETECTED ABOVE REPORTING LIMIT
* NOT QUANTIFIABLE DUE TO MATRIX INTERFERENCE

ATAS 875 Fee Fee Road • Maryland Heights, MO 63043 • (314) 434-4570 - FAX (314) 434-0080

CLIENT: DAMES & MOORE
721 EMERSON ROAD, SUITE 220
ST. LOUIS, MO 63141
ATTN: DAVID HEINZE

REPORT: 283810A2(522)

DATE : 12-10-99

SAMPLE MATRIX : WATER
ATAS # : 28381.02
DATE RECEIVED : 11-30-99
DATE EXTRACTED : 12-01-99
DATE ANALYZED : 12-01-99
METHOD REFERENCE: OA-2
PROJECT : PENTAIR
SAMPLE ID : MW-2

RESULTS REPORTED IN mg/L OR PARTS PER MILLION(PPM)

PARAMETER	REPORTING LIMIT	UNIT	RESULTS
TOTAL EXTRACTABLE HYDROCARBONS			
GASOLINE C6-C14	0.100	mg/L	ND
MINERAL SPIRITS C7-C14	0.100	mg/L	ND
KEROSENE C9-C16	0.100	mg/L	ND
DIESEL C7-C26	0.100	mg/L	ND
#6 FUEL OIL C10-C32	0.100	mg/L	ND
HYDRAULIC FLUID C12-C33	0.100	mg/L	ND
MOTOR OIL C16-C33	0.100	mg/L	ND

QA/QC SURROGATE RECOVERY

P-TERPHENYL D14(33-121) 46 %

ND - NOT DETECTED ABOVE REPORTING LIMIT
: NOT QUANTIFIABLE DUE TO MATRIX INTERFERENCE

ATAS 875 Fee Fee Road • Maryland Heights, MO 63043 • (314) 434-4570 - FAX (314) 434-0080

CLIENT: DAMES & MOORE
721 EMERSON ROAD, SUITE 220
ST. LOUIS, MO 63141
ATTN: DAVID HEINZE

REPORT: 28381OA2(522)
DATE : 12-10-99

SAMPLE MATRIX : WATER
ATAS # : 28381.01
DATE RECEIVED : 11-30-99
DATE EXTRACTED : 12-01-99
DATE ANALYZED : 12-02-99
METHOD REFERENCE: OA-2
PROJECT : PENTAIR
SAMPLE ID : MW-1

RESULTS REPORTED IN mg/L OR PARTS PER MILLION(PPM)

PARAMETER	REPORTING LIMIT	UNIT	RESULTS
TOTAL EXTRACTABLE HYDROCARBONS			
GASOLINE C6-C14	0.100	mg/L	ND
MINERAL SPIRITS C7-C14	0.100	mg/L	ND
KEROSENE C9-C16	0.100	mg/L	ND
DIESEL C7-C26	0.100	mg/L	ND
#6 FUEL OIL C10-C32	0.100	mg/L	ND
HYDRAULIC FLUID C12-C33	0.100	mg/L	ND
MOTOR OIL C16-C33	0.100	mg/L	ND
MISCELLANEOUS (1)	0.100	mg/L	1.30
MISCELLANEOUS (2)	0.100	mg/L	4.47
MISCELLANEOUS (3)	0.100	mg/L	15.5

QA/QC SURROGATE RECOVERY

P-TERPHENYL D14(33-121) I %

(1) = ANALYSIS SHOWS PEAKS WHICH CANNOT BE MATCHED TO ANY HYDROCARBON STANDARD LISTED ABOVE. THE PATTERN IS MOST SIMILAR TO MINERAL SPIRITS AND WAS QUANTITATED FROM THAT STANDARD.
(2) = ANALYSIS SHOWS PEAKS WHICH CANNOT BE MATCHED TO ANY HYDROCARBON STANDARD LISTED ABOVE. THE PATTERN IS MOST SIMILAR TO DIESEL FUEL AND WAS QUANTITATED FROM THAT STANDARD.
(3) = ANALYSIS SHOWS PEAKS WHICH CANNOT BE MATCHED TO ANY HYDROCARBON STANDARD LISTED ABOVE. THE PATTERN IS MOST SIMILAR TO MOTOR OIL AND WAS QUANTITATED FROM THAT STANDARD.
N = NOT DETECTED ABOVE REPORTING LIMIT
\- = NOT QUANTIFIABLE DUE TO MATRIX INTERFERENCE

ATAS 875 Fee Fee Road • Maryland Heights, MO 63043 • (314) 434-4570 - FAX (314) 434-0080

CLIENT: DAMES & MOORE
721 EMERSON ROAD, SUITE 220
ST. LOUIS, MO 63141
ATTN: GEORGE JONES

REPORT: 2893601VO(720)

DATE : 02-16-00

SAMPLE MATRIX : WATER
ATAS # : 28936.08
DATE SUBMITTED: 02-10-00
DATE ANALYZED : 02-11-00

METHOD REF.: SW846-8260B, EPA METHODOLOGY
PROJECT # : 27994-022-045 - PENTAIR
SAMPLE ID : GP-14

RESULTS REPORTED IN ug/L OR Parts Per Billion (PPB)

VOLATILES	R.L.	RESULTS	VOLATILES	R.L.	RESULTS
XYLENE (TOTAL)	5	ND	TOLUENE	5	ND
DICHLORODIFLUOROMETHANE	10	ND	trans-1,3-DICHLOROPROPENE	5	ND
CHLOROMETHANE	10	ND	1,1,2-TRICHLOROETHANE	5	ND
VINYL CHLORIDE	10	ND	TETRACHLOROETHENE	5	ND
BROMOMETHANE	10	ND	1,3-DICHLOROPROPANE	5	ND
CHLOROETHANE	10	ND	2-HEXANONE	10	ND
TRICHLOROFLUOROMETHANE	10	ND	DIBROMOCHLOROMETHANE	5	ND
1,1-DICHLOROETHENE	5	ND	1,2-DIBROMOETHANE	5	ND
ACETONE	10	ND	CHLOROBENZENE	5	ND
IODOMETHANE	10	ND	1,1,1,2-TETRACHLOROETHANE	5	ND
CARBON DISULFIDE	5	ND	ETHYLBENZENE	5	ND
METHYLENE CHLORIDE	5	ND	STYRENE	5	ND
t e-1,2-DICHLOROETHENE	5	ND	BROMOFORM	5	ND
M..dYL TERT-BUTYL ETHER	10	ND	ISOPROPYLBENZENE	5	ND
1,1-DICHLOROETHANE	5	ND	1,1,2,2-TETRACHLOROETHANE	5	ND
VINYL ACETATE	10	ND	BROMOBENZENE	5	ND
2,2-DICHLOROPROPANE	5	ND	1,2,3-TRICHLOROPROPANE	5	ND
cis-1,2-DICHLOROETHENE	5	5	n-PROPYLBENZENE	5	5
2-BUTANONE	10	ND	2-CHLOROTOLUENE	5	ND
BROMOCHLOROMETHANE	5	ND	1,3,5-TRIMETHYLBENZENE	5	ND
CHLOROFORM	5	ND	4-CHLOROTOLUENE	5	ND
1,1,1-TRICHLOROETHANE	5	ND	TERT-BUTYLBENZENE	5	ND
CARBON TETRACHLORIDE	5	ND	1,2,4-TRIMETHYLBENZENE	5	ND
1,1-DICHLOROPROPENE	5	ND	sec-BUTYLBENZENE	5	ND
BENZENE	5	ND	1,3-DICHLOROBENZENE	5	ND
1,2-DICHLOROETHANE	5	ND	p-ISOPROPYLTOLUENE	5	ND
TRICHLOROETHENE	5	5	1,4-DICHLOROBENZENE	5	ND
1,2-DICHLOROPROPANE	5	ND	n-BUTYLBENZENE	5	ND
DIBROMOMETHANE	5	ND	1,2-DICHLOROBENZENE	5	ND
BROMODICHLOROMETHANE	5	ND	1,2-DIBROMO-3-CHLOROPROPANE	5	ND
cis-1,3-DICHLOROPROPENE	5	ND	1,2,4-TRICHLOROBENZENE	5	ND
4-METHYL-2-PENTANONE	10	ND	HEXACHLOROBUTADIENE	5	ND
1,2,3-TRICHLOROBENZENE	5	ND	NAPHTHALENE	5	ND

QA/QC SURROGATE RECOVERIES

TOLUENE-d8(80-116) 104% BROMOFLUOROBENZENE(86-115) 112%
1,2-DICHLOROETHANE-D4(76-114) 87%

B = ANALYTE DETECTED IN METHOD BLANK, POSSIBLY BELOW THE REPORTING LIMIT.
ND = NOT DETECTED ABOVE REPORTING LIMIT
RL = REPORTING LIMIT; DEFINED AS THE PRACTICAL QUANTITATION LIMIT PLUS ANY DILUTION, POSITIVE VALUES BELOW THIS LIMIT WERE NOT REPORTED.

ATAS 875 Fee Fee Road • Maryland Heights, MO 63043 • (314) 434-4570 - FAX (314) 434-0080

CLIENT: DAMES & MOORE
721 EMERSON ROAD, SUITE 220
ST. LOUIS, MO 63141
ATTN: GEORGE JONES

REPORT: 2893601VO(720)
DATE : 02-16-00

SAMPLE MATRIX : WATER
ATAS # : 28936.05
DATE SUBMITTED: 02-10-00
DATE ANALYZED : 02-11-00

METHOD REF.: SW846-8260B, EPA METHODOLOGY
PROJECT # : 27994-022-045 - PENTAIR
SAMPLE ID : GP-12

RESULTS REPORTED IN ug/L OR Parts Per Billion (PPB)

VOLATILES	R.L.	RESULTS	VOLATILES	R.L.	RESULTS
XYLENE (TOTAL)	5	12	TOLUENE	5	7
DICHLORODIFLUOROMETHANE	10	ND	trans-1,3-DICHLOROPROPENE	5	ND
CHLOROMETHANE	10	ND	1,1,2-TRICHLOROETHANE	5	11
VINYL CHLORIDE	1000	940	TETRACHLOROETHENE	5	ND
BROMOMETHANE	10	ND	1,3-DICHLOROPROPANE	5	ND
CHLOROETHANE	10	ND	2-HEXANONE	10	ND
TRICHLOROFLUOROMETHANE	10	ND	DIBROMOCHLOROMETHANE	5	ND
1,1-DICHLOROETHENE	5	20	1,2-DIBROMOETHANE	5	ND
ACETONE	10	19	CHLOROBENZENE	5	ND
IODOMETHANE	10	ND	1,1,1,2-TETRACHLOROETHANE	5	ND
CARBON DISULFIDE	5	ND	ETHYLBENZENE	5	ND
METHYLENE CHLORIDE	5	ND	STYRENE	5	ND
t s-1,2-DICHLOROETHENE	500	ND	BROMOFORM	5	ND
M YL TERT-BUTYL ETHER	10	ND	ISOPROPYLBENZENE	5	6
1,1-DICHLOROETHANE	5	ND	1,1,2,2-TETRACHLOROETHANE	5	ND
VINYL ACETATE	10	ND	BROMOBENZENE	5	ND
2,2-DICHLOROPROPANE	5	ND	1,2,3-TRICHLOROPROPANE	5	ND
cis-1,2-DICHLOROETHENE	500	3700	n-PROPYLBENZENE	5	6
2-BUTANONE	10	ND	2-CHLOROTOLUENE	5	ND
BROMOCHLOROMETHANE	5	ND	1,3,5-TRIMETHYLBENZENE	5	13
CHLOROFORM	5	ND	4-CHLOROTOLUENE	5	ND
1,1,1-TRICHLOROETHANE	5	ND	TERT-BUTYLBENZENE	5	ND
CARBON TETRACHLORIDE	5	ND	1,2,4-TRIMETHYLBENZENE	5	43
1,1-DICHLOROPROPENE	5	ND	sec-BUTYLBENZENE	5	5
BENZENE	500	260 J	1,3-DICHLOROBENZENE	5	ND
1,2-DICHLOROETHANE	5	13	p-ISOPROPYLTOLUENE	5	ND
TRICHLOROETHENE	500	6000	1,4-DICHLOROBENZENE	5	ND
1,2-DICHLOROPROPANE	5	ND	n-BUTYLBENZENE	5	ND
DIBROMOMETHANE	5	ND	1,2-DICHLOROBENZENE	5	ND
BROMODICHLOROMETHANE	5	ND	1,2-DIBROMO-3-CHLOROPROPANE	5	ND
cis-1,3-DICHLOROPROPENE	5	ND	1,2,4-TRICHLOROBENZENE	5	ND
4-METHYL-2-PENTANONE	10	ND	HEXACHLOROBUTADIENE	5	ND
1,2,3-TRICHLOROBENZENE	5	ND	NAPHTHALENE	5	ND

QA/QC SURROGATE RECOVERIES

TOLUENE-d8(80-116) 104% BROMOFLUOROBENZENE(86-115) 105%
1,2-DICHLOROETHANE-D4(76-114) 97%

J = ESTIMATED VALUE; BELOW REPORTING LIMIT
ND = NOT DETECTED ABOVE REPORTING LIMIT
RL = REPORTING LIMIT; DEFINED AS THE PRACTICAL QUANTITATION LIMIT PLUS ANY DILUTION.

ATAS 875 Fee Fee Road • Maryland Heights, MO 63043 • (314) 434-4570 - FAX (314) 434-0080

CLIENT: DAMES & MOORE
721 EMERSON ROAD, SUITE 220
ST. LOUIS, MO 63141
ATTN: GEORGE JONES

REPORT: 2893601VO(720)

DATE : 02-16-00

SAMPLE MATRIX : WATER
ATAS # : 28936.03
DATE SUBMITTED: 02-10-00
DATE ANALYZED : 02-12-00

METHOD REF.: SW846-8260B, EPA METHODOLOGY
PROJECT # : 27994-022-045 - PENTAIR
SAMPLE ID : GP-11

RESULTS REPORTED IN ug/L OR Parts Per Billion (PPB)

VOLATILES	R.L.	RESULTS	VOLATILES	R.L.	RESULTS
XYLENE (TOTAL)	500	190 J	TOLUENE	500	ND
DICHLORODIFLUOROMETHANE	1000	ND	trans-1,3-DICHLOROPROPENE	500	ND
CHLOROMETHANE	1000	ND	1,1,2-TRICHLOROETHANE	500	ND
VINYL CHLORIDE	1000	2200	TETRACHLOROETHENE	500	ND
BROMOMETHANE	1000	ND	1,3-DICHLOROPROPANE	500	ND
CHLOROETHANE	1000	ND	2-HEXANONE	1000	ND
TRICHLOROFLUOROMETHANE	1000	ND	DIBROMOCHLOROMETHANE	500	ND
1,1-DICHLOROETHENE	500	700	1,2-DIBROMOETHANE	500	ND
ACETONE	1000	ND	CHLOROBENZENE	500	ND
IODOMETHANE	1000	ND	1,1,1,2 TETRACHLOROETHANE	500	ND
CARBON DISULFIDE	500	ND	ETHYLBENZENE	500	ND
METHYLENE CHLORIDE	500	230 J B	STYRENE	500	ND
E: -1,2-DICHLOROETHENE	1200	ND	BROMOFORM	500	ND
ME. AL TERT-BUTYL ETHER	1000	ND	ISOPROPYLBENZENE	500	ND
1,1-DICHLOROETHANE	500	ND	1,1,2,2-TETRACHLOROETHANE	500	ND
VINYL ACETATE	1000	ND	BROMOBENZENE	500	ND
2,2-DICHLOROPROPANE	500	ND	1,2,3-TRICHLOROPROPANE	500	ND
cis-1,2-DICHLOROETHENE	1200	34000	n-PROPYLBENZENE	500	ND
2-BUTANONE	1000	ND	2-CHLOROTOLUENE	500	ND
BROMOCHLOROMETHANE	500	ND	1,3,5-TRIMETHYLBENZENE	500	ND
CHLOROFORM	500	ND	4-CHLOROTOLUENE	500	ND
1,1,1-TRICHLOROETHANE	500	ND	TERT-BUTYLBENZENE	500	ND
CARBON TETRACHLORIDE	500	ND	1,2,4-TRIMETHYLBENZENE	500	ND
1,1-DICHLOROPROPENE	500	ND	sec-BUTYLBENZENE	500	ND
BENZENE	500	540	1,3-DICHLOROBENZENE	500	ND
1,2-DICHLOROETHANE	500	ND	p-ISOPROPYLTOLUENE	500	ND
TRICHLOROETHENE	1200	22000	1,4-DICHLOROBENZENE	500	ND
1,2-DICHLOROPROPANE	500	ND	n-BUTYLBENZENE	500	ND
DIBROMOMETHANE	500	ND	1,2-DICHLOROBENZENE	500	ND
BROMODICHLOROMETHANE	500	ND	1,2-DIBROMO-3-CHLOROPROPANE	500	ND
cis-1,3-DICHLOROPROPENE	500	ND	1,2,4-TRICHLOROBENZENE	500	ND
4-METHYL-2-PENTANONE	1000	ND	HEXACHLOROBUTADIENE	500	ND
1,2,3-TRICHLOROBENZENE	500	ND	NAPHTHALENE	500	ND

QA/QC SURROGATE RECOVERIES

TOLUENE-d8(80-116) 104% BROMOFLUOROBENZENE(86-115) 105%
1,2-DICHLOROETHANE-D4(76-114) 91%

B = ANALYTE DETECTED IN METHOD BLANK, POSSIBLY BELOW THE REPORTING LIMIT.
J = ESTIMATED VALUE; BELOW REPORTING LIMIT
ND = NOT DETECTED ABOVE REPORTING LIMIT
RL = REPORTING LIMIT; DEFINED AS THE PRACTICAL QUANTITATION LIMIT PLUS ANY DILUTION

ATAS 875 Fee Fee Road • Maryland Heights, MO 63043 • (314) 434-4570 - FAX (314) 434-0080

LIENT: DAMES & MOORE
721 EMERSON ROAD, SUITE 220
ST. LOUIS, MO 63141
ATTN: GEORGE JONES

REPORT: 2893601VO(720)

DATE : 02-16-00

SAMPLE MATRIX : WATER
ATAS # : 28936.02
DATE SUBMITTED: 02-10-00
DATE ANALYZED : 02-12-00

METHOD REF.: SW846-8260B, EPA METHODOLOGY
PROJECT # : 27994-022-045 - PENTAIR
SAMPLE ID : GP-10

RESULTS REPORTED IN ug/L OR Parts Per Billion (PPB)

)LATILES	R.L.	RESULTS	VOLATILES	R.L.	RESULTS
ZLENE (TOTAL)	100	ND	TOLUENE	100	ND
ICHLORODIFLUOROMETHANE	200	ND	trans-1,3-DICHLOROPROPENE	100	ND
HLOROMETHANE	200	ND	1,1,2-TRICHLOROETHANE	100	ND
INYL CHLORIDE	200	ND	TETRACHLOROETHENE	100	ND
ROMOMETHANE	200	ND	1,3-DICHLOROPROPANE	100	ND
HLOROETHANE	200	ND	2-HEXANONE	200	ND
RICHLOROFLUOROMETHANE	200	ND	DIBROMOCHLOROMETHANE	100	ND
,1-DICHLOROETHENE	100	ND	1,2-DIBROMOETHANE	100	ND
ETONE	200	ND	CHLOROBENZENE	100	ND
)DOMETHANE	200	ND	1,1,1,2-TETRACHLOROETHANE	100	ND
ARBON DISULFIDE	100	ND	ETHYLBENZENE	100	ND
ETHYLENE CHLORIDE	100	84 J B	STYRENE	100	ND
ar-1,2-DICHLOROETHENE	100	ND	BROMOFORM	100	ND
ET TERT-BUTYL ETHER	200	ND	ISOPROPYLBENZENE	100	ND
,1-DICHLOROETHANE	100	ND	1,1,2,2-TETRACHLOROETHANE	100	ND
INYL ACETATE	200	ND	BROMOBENZENE	100	ND
,2-DICHLOROPROPANE	100	ND	1,2,3-TRICHLOROPROPANE	100	ND
is-1,2-DICHLOROETHENE	100	ND	n-PROPYLBENZENE	100	38 J
-BUTANONE	200	ND	2-CHLOROTOLUENE	100	ND
ROMOCHLOROMETHANE	100	ND	1,3,5-TRIMETHYLBENZENE	100	ND
HLOROFORM	100	ND	4-CHLOROTOLUENE	100	ND
,1,1-TRICHLOROETHANE	100	ND	TERT-BUTYLBENZENE	100	ND
ARBON TETRACHLORIDE	100	ND	1,2,4-TRIMETHYLBENZENE	100	ND
,1-DICHLOROPROPENE	100	ND	sec-BUTYLBENZENE	100	59 J
ENZENE	100	48 J	1,3-DICHLOROBENZENE	100	ND
,2-DICHLOROETHANE	100	ND	p-ISOPROPYLTOLUENE	100	ND
RICHLOROETHENE	100	ND	1,4-DICHLOROBENZENE	100	ND
,2-DICHLOROPROPANE	100	ND	n-BUTYLBENZENE	100	61 J
IBROMOMETHANE	100	ND	1,2-DICHLOROBENZENE	100	ND
ROMODICHLOROMETHANE	100	ND	1,2-DIBROMO-3-CHLOROPROPANE	100	ND
is-1,3-DICHLOROPROPENE	100	ND	1,2,4-TRICHLOROBENZENE	100	ND
-METHYL-2-PENTANONE	200	ND	HEXACHLOROBUTADIENE	100	ND
,2,3-TRICHLOROBENZENE	100	ND	NAPHTHALENE	100	ND

QA/QC SURROGATE RECOVERIES

TOLUENE-d8 (80-116) 103% BROMOFLUOROBENZENE (86-115) 99%
1,2-DICHLOROETHANE-D4 (76-114) 89%

= ANALYTE DETECTED IN METHOD BLANK, POSSIBLY BELOW THE REPORTING LIMIT.
= ESTIMATED VALUE; BELOW REPORTING LIMIT
) = NOT DETECTED ABOVE REPORTING LIMIT
L = REPORTING LIMIT; DEFINED AS THE PRACTICAL QUANTITATION LIMIT PLUS ANY DILUTION

ATAS 875 Fee Fee Road • Maryland Heights, MO 63043 • (314) 434-4570 - FAX (314) 434-0080

LIENT: DAMES & MOORE
721 EMERSON ROAD, SUITE 220
ST. LOUIS, MO 63141
ATTN: GEORGE JONES

REPORT: 2893601VO(720)
DATE : 02-16-00

SAMPLE MATRIX : WATER
ATAS # : 28936.04
DATE SUBMITTED: 02-10-00
DATE ANALYZED : 02-11-00

METHOD REF.: SW846-8260B, EPA METHODOLOGY
PROJECT # : 27994-022-045 - PENTAIR
SAMPLE ID : GP-9

RESULTS REPORTED IN ug/L OR Parts Per Billion (PPB)

OLATILES	R.L.	RESULTS	VOLATILES	R.L.	RESULTS
YLENE (TOTAL)	5	ND	TOLUENE	5	ND
ICHLORODIFLUOROMETHANE	10	ND	trans-1,3-DICHLOROPROPENE	5	ND
HLOROMETHANE	10	ND	1,1,2-TRICHLOROETHANE	5	ND
INYL CHLORIDE	10	120	TETRACHLOROETHENE	5	ND
ROMOMETHANE	10	ND	1,3-DICHLOROPROPANE	5	ND
HLOROETHANE	10	ND	2-HEXANONE	10	ND
RICHLOROFLUOROMETHANE	10	ND	DIBROMOCHLOROMETHANE	5	ND
,1-DICHLOROETHENE	5	ND	1,2-DIBROMOETHANE	5	ND
CETONE	10	ND	CHLOROBENZENE	5	ND
ODOMETHANE	10	ND	1,1,1,2-TETRACHLOROETHANE	5	ND
ARBON DISULFIDE	5	ND	ETHYLBENZENE	5	ND
ETHYLENE CHLORIDE	5	ND	STYRENE	5	ND
r -1,2-DICHLOROETHENE	5	ND	BROMOFORM	5	ND
E L TERT-BUTYL ETHER	10	ND	ISOPROPYLBENZENE	5	ND
,1-DICHLOROETHANE	5	ND	1,1,2,2-TETRACHLOROETHANE	5	ND
INYL ACETATE	10	ND	BROMOBENZENE	5	ND
2,2-DICHLOROPROPANE	5	ND	1,2,3-TRICHLOROPROPANE	5	ND
is-1,2-DICHLOROETHENE	5	91	n-PROPYLBENZENE	5	ND
2-BUTANONE	10	ND	2-CHLOROTOLUENE	5	ND
BROMOCHLOROMETHANE	5	ND	1,3,5-TRIMETHYLBENZENE	5	ND
CHLOROFORM	5	ND	4-CHLOROTOLUENE	5	ND
1,1,1-TRICHLOROETHANE	5	ND	TERT-BUTYLBENZENE	5	ND
CARBON TETRACHLORIDE	5	ND	1,2,4-TRIMETHYLBENZENE	5	ND
1,1-DICHLOROPROPENE	5	ND	sec-BUTYLBENZENE	5	ND
BENZENE	5	ND	1,3-DICHLOROBENZENE	5	ND
1,2-DICHLOROETHANE	5	ND	p-ISOPROPYLTOLUENE	5	ND
TRICHLOROETHENE	5	5	1,4-DICHLOROBENZENE	5	ND
1,2-DICHLOROPROPANE	5	ND	n-BUTYLBENZENE	5	ND
DIBROMOMETHANE	5	ND	1,2-DICHLOROBENZENE	5	ND
BROMODICHLOROMETHANE	5	ND	1,2-DIBROMO-3-CHLOROPROPANE	5	ND
cis-1,3-DICHLOROPROPENE	5	ND	1,2,4-TRICHLOROBENZENE	5	ND
4-METHYL-2-PENTANONE	10	ND	HEXACHLOROBUTADIENE	5	ND
1,2,3-TRICHLOROBENZENE	5	ND	NAPHTHALENE	5	ND

QA/QC SURROGATE RECOVERIES

TOLUENE-d8(80-116) 104% BROMOFLUOROBENZENE(86-115) 108%
1,2-DICHLOROETHANE-D4(76-114) 92%

B = ANALYTE DETECTED IN METHOD BLANK, POSSIBLY BELOW THE REPORTING LIMIT.
ND = NOT DETECTED ABOVE REPORTING LIMIT
RL = REPORTING LIMIT; DEFINED AS THE PRACTICAL QUANTITATION LIMIT PLUS ANY DILUTION, POSITIVE VALUES BELOW THIS LIMIT WERE NOT REPORTED.

ATAS 875 Fee Fee Road • Maryland Heights, MO 63043 • (314) 434-4570 - FAX (314) 434-0080

REPORT: 2893601VO(720)

DATE : 02-16-00

LIENT: DAMES & MOORE
721 EMERSON ROAD, SUITE 220
ST. LOUIS, MO 63141
ATTN: GEORGE JONES

SAMPLE MATRIX : WATER
ATAS # : 28936.07
DATE SUBMITTED: 02-10-00
DATE ANALYZED : 02-11-00

METHOD REF.: SW846-8260B, EPA METHODOLOGY
PROJECT # : 27994-022-045 - PENTAIR
SAMPLE ID : GP-6

RESULTS REPORTED IN ug/L OR Parts Per Billion (PPB)

OLATILES	R.L.	RESULTS
YLENE (TOTAL)	5	ND
ICHLORODIFLUOROMETHANE	10	ND
HLOROMETHANE	10	ND
INYL CHLORIDE	10	ND
ROMOMETHANE	10	ND
HLOROETHANE	10	ND
RICHLOROFLUOROMETHANE	10	ND
,1-DICHLOROETHENE	5	ND
CETONE	10	ND
ODOMETHANE	10	ND
ARBON DISULFIDE	5	ND
ETHYLENE CHLORIDE	5	ND
tr -1,2-DICHLOROETHENE	5	ND
E_ .L TERT-BUTYL ETHER	10	ND
1,1-DICHLOROETHANE	5	ND
INYL ACETATE	10	ND
,2-DICHLOROPROPANE	5	ND
is-1,2-DICHLOROETHENE	5	ND
2-BUTANONE	10	ND
ROMOCHLOROMETHANE	5	ND
HLOROFORM	5	ND
1,1,1-TRICHLOROETHANE	5	ND
ARBON TETRACHLORIDE	5	ND
1,1-DICHLOROPROPENE	5	ND
ENZENE	5	ND
1,2-DICHLOROETHANE	5	ND
RICHLOROETHENE	5	6
1,2-DICHLOROPROPANE	5	ND
IBROMOMETHANE	5	ND
ROMODICHLOROMETHANE	5	ND
is-1,3-DICHLOROPROPENE	5	ND
4-METHYL-2-PENTANONE	10	ND
1,2,3-TRICHLOROBENZENE	5	ND

VOLATILES	R.L.	RESULTS
TOLUENE	5	ND
trans-1,3-DICHLOROPROPENE	5	ND
1,1,2-TRICHLOROETHANE	5	ND
TETRACHLOROETHENE	5	ND
1,3-DICHLOROPROPANE	5	ND
2-HEXANONE	10	ND
DIBROMOCHLOROMETHANE	5	ND
1,2-DIBROMOETHANE	5	ND
CHLOROBENZENE	5	ND
1,1,1,2-TETRACHLOROETHANE	5	ND
ETHYLBENZENE	5	ND
STYRENE	5	ND
BROMOFORM	5	ND
ISOPROPYLBENZENE	5	ND
1,1,2,2-TETRACHLOROETHANE	5	ND
BROMOBENZENE	5	ND
1,2,3-TRICHLOROPROPANE	5	ND
n-PROPYLBENZENE	5	ND
2-CHLOROTOLUENE	5	ND
1,3,5-TRIMETHYLBENZENE	5	ND
4-CHLOROTOLUENE	5	ND
TERT-BUTYLBENZENE	5	ND
1,2,4-TRIMETHYLBENZENE	5	ND
sec-BUTYLBENZENE	5	ND
1,3-DICHLOROBENZENE	5	ND
p-ISOPROPYLTOLUENE	5	ND
1,4-DICHLOROBENZENE	5	ND
n-BUTYLBENZENE	5	ND
1,2-DICHLOROBENZENE	5	ND
1,2-DIBROMO-3-CHLOROPROPANE	5	ND
1,2,4-TRICHLOROBENZENE	5	ND
HEXACHLOROBUTADIENE	5	ND
NAPHTHALENE	5	ND

QA/QC SURROGATE RECOVERIES

TOLUENE-d8 (80-116) 101% BROMOFLUOROBENZENE (86-115) 104%
1,2-DICHLOROETHANE-D4 (76-114) 87%

B = ANALYTE DETECTED IN METHOD BLANK, POSSIBLY BELOW THE REPORTING LIMIT.
ND = NOT DETECTED ABOVE REPORTING LIMIT
RL = REPORTING LIMIT; DEFINED AS THE PRACTICAL QUANTITATION LIMIT PLUS ANY DILUTION, POSITIVE VALUES BELOW THIS LIMIT WERE NOT REPORTED.

ATAS 875 Fee Fee Road • Maryland Heights, MO 63043 • (314) 434-4570 - FAX (314) 434-0080

IENT: DAMES & MOORE
721 EMERSON ROAD, SUITE 220
ST. LOUIS, MO 63141
ATTN: GEORGE JONES

REPORT: 2893601VO(720)
DATE : 02-16-00

SAMPLE MATRIX : WATER
ATAS # : 28936.01
DATE SUBMITTED: 02-10-00
DATE ANALYZED : 02-11-00

METHOD REF.: SW846-8260B, EPA METHODOLOGY
PROJECT # : 27994-022-045 - PENTAIR
SAMPLE ID : GP-3

RESULTS REPORTED IN ug/L OR Parts Per Billion (PPB)

LATILES	R.L.	RESULTS	VOLATILES	R.L.	RESULTS
LENE (TOTAL)	5	ND	TOLUENE	5	ND
CHLORODIFLUOROMETHANE	10	ND	trans-1,3-DICHLOROPROPENE	5	ND
LOROMETHANE	10	ND	1,1,2-TRICHLOROETHANE	5	ND
NYL CHLORIDE	10	120	TETRACHLOROETHENE	5	ND
OMOMETHANE	10	ND	1,3-DICHLOROPROPANE	5	ND
LOROETHANE	10	ND	2-HEXANONE	10	ND
ICHLOROFLUOROMETHANE	10	ND	DIBROMOCHLOROMETHANE	5	ND
1-DICHLOROETHENE	5	ND	1,2-DIBROMOETHANE	5	ND
ETONE	10	ND	CHLOROBENZENE	5	ND
DOMETHANE	10	ND	1,1,1,2-TETRACHLOROETHANE	5	ND
RBON DISULFIDE	5	ND	ETHYLBENZENE	5	ND
THYLENE CHLORIDE	5	6	STYRENE	5	ND
ans-1,2-DICHLOROETHENE	25	ND	BROMOFORM	5	ND
TT TERT-BUTYL ETHER	10	ND	ISOPROPYLBENZENE	5	ND
1- CHLOROETHANE	5	ND	1,1,2,2-TETRACHLOROETHANE	5	ND
NYL ACETATE	10	ND	BROMOBENZENE	5	ND
2-DICHLOROPROPANE	5	ND	1,2,3-TRICHLOROPROPANE	5	ND
s-1,2-DICHLOROETHENE	25	410	n-PROPYLBENZENE	5	ND
BUTANONE	10	ND	2-CHLOROTOLUENE	5	ND
OMOCHLOROMETHANE	5	ND	1,3,5-TRIMETHYLBENZENE	5	ND
LOROFORM	5	ND	4-CHLOROTOLUENE	5	ND
1,1-TRICHLOROETHANE	5	ND	TERT-BUTYLBENZENE	5	ND
RBON TETRACHLORIDE	5	ND	1,2,4-TRIMETHYLBENZENE	5	ND
1-DICHLOROPROPENE	5	ND	sec-BUTYLBENZENE	5	ND
NZENE	5	ND	1,3-DICHLOROBENZENE	5	ND
2-DICHLOROETHANE	5	ND	p-ISOPROPYLTOLUENE	5	ND
ICHLOROETHENE	25	580	1,4-DICHLOROBENZENE	5	ND
2-DICHLOROPROPANE	5	ND	n-BUTYLBENZENE	5	ND
BROMOMETHANE	5	ND	1,2-DICHLOROBENZENE	5	ND
OMODICHLOROMETHANE	5	ND	1,2-DIBROMO-3-CHLOROPROPANE	5	ND
s-1,3-DICHLOROPROPENE	5	ND	1,2,4-TRICHLOROBENZENE	5	ND
METHYL-2-PENTANONE	10	ND	HEXACHLOROBUTADIENE	5	ND
2,3-TRICHLOROBENZENE	5	ND	NAPHTHALENE	5	ND

QA/QC SURROGATE RECOVERIES

TOLUENE-d8(80-116) 102% BROMOFLUOROBENZENE(86-115) 106%
1,2-DICHLOROETHANE-D4(76-114) 91%

= ANALYTE DETECTED IN METHOD BLANK, POSSIBLY BELOW THE REPORTING LIMIT.
= NOT DETECTED ABOVE REPORTING LIMIT
= REPORTING LIMIT; DEFINED AS THE PRACTICAL QUANTITATION LIMIT PLUS ANY DILUTION, POSITIVE VALUES BELOW THIS LIMIT WERE NOT REPORTED.

ATAS 875 Fee Fee Road • Maryland Heights, MO 63043 • (314) 434-4570 - FAX (314) 434-0080

LIENT: DAMES & MOORE
721 EMERSON ROAD, SUITE 220
ST. LOUIS, MO 63141
ATTN: GEORGE JONES

REPORT: 2893601VO(720)

DATE : 02-16-00

SAMPLE MATRIX : WATER
ATAS # : 28936.06
DATE SUBMITTED: 02-10-00
DATE ANALYZED : 02-12-00

METHOD REF.: SW846-8260B, EPA METHODOLOGY
PROJECT # : 27994-022-045 - PENTAIR
SAMPLE ID : GP-2

RESULTS REPORTED IN ug/L OR Parts Per Billion (PPB)

OLATILES	R.L.	RESULTS	VOLATILES	R.L.	RESULTS
ILENE (TOTAL)	5	ND	TOLUENE	5	ND
ICHLORODIFLUOROMETHANE	10	ND	trans-1,3-DICHLOROPROPENE	5	ND
ILOROMETHANE	10	ND	1,1,2-TRICHLOROETHANE	5	ND
INYL CHLORIDE	10	38	TETRACHLOROETHENE	5	ND
ROMOMETHANE	10	ND	1,3-DICHLOROPROPANE	5	ND
ILOROETHANE	10	ND	2-HEXANONE	10	ND
RICHLOROFLUOROMETHANE	10	ND	DIBROMOCHLOROMETHANE	5	ND
,1-DICHLOROETHENE	5	ND	1,2-DIBROMOETHANE	5	ND
ETONE	10	ND	CHLOROBENZENE	5	ND
DOMETHANE	10	ND	1,1,1,2-TETRACHLOROETHANE	5	ND
ARBON DISULFIDE	5	ND	ETHYLBENZENE	5	ND
ETHYLENE CHLORIDE	5	9 B	STYRENE	5	ND
ar--1,2-DICHLOROETHENE	5	ND	BROMOFORM	5	ND
ET TERT-BUTYL ETHER	10	ND	ISOPROPYLBENZENE	5	ND
,1-DICHLOROETHANE	5	ND	1,1,2,2-TETRACHLOROETHANE	5	ND
INYL ACETATE	10	ND	BROMOBENZENE	5	ND
,2-DICHLOROPROPANE	5	ND	1,2,3-TRICHLOROPROPANE	5	ND
is-1,2-DICHLOROETHENE	5	62	n-PROPYLBENZENE	5	ND
-BUTANONE	10	ND	2-CHLOROTOLUENE	5	ND
ROMOCHLOROMETHANE	5	ND	1,3,5-TRIMETHYLBENZENE	5	ND
ILOROFORM	5	ND	4-CHLOROTOLUENE	5	ND
,1,1-TRICHLOROETHANE	5	ND	TERT-BUTYLBENZENE	5	ND
ARBON TETRACHLORIDE	5	ND	1,2,4-TRIMETHYLBENZENE	5	ND
,1-DICHLOROPROPENE	5	ND	sec-BUTYLBENZENE	5	ND
ENZENE	5	10	1,3-DICHLOROBENZENE	5	ND
,2-DICHLOROETHANE	5	ND	p-ISOPROPYLTOLUENE	5	ND
RICHLOROETHENE	5	ND	1,4-DICHLOROBENZENE	5	ND
,2-DICHLOROPROPANE	5	ND	n-BUTYLBENZENE	5	ND
IBROMOMETHANE	5	ND	1,2-DICHLOROBENZENE	5	ND
ROMODICHLOROMETHANE	5	ND	1,2-DIBROMO-3-CHLOROPROPANE	5	ND
is-1,3-DICHLOROPROPENE	5	ND	1,2,4-TRICHLOROBENZENE	5	ND
-METHYL-2-PENTANONE	10	ND	HEXACHLOROBUTADIENE	5	ND
,2,3-TRICHLOROBENZENE	5	ND	NAPHTHALENE	5	ND

QA/QC SURROGATE RECOVERIES

TOLUENE-d8(80-116) 107% BROMOFLUOROBENZENE(86-115) 95%
1,2-DICHLOROETHANE-D4(76-114) 92%

= ANALYTE DETECTED IN METHOD BLANK, POSSIBLY BELOW THE REPORTING LIMIT.
) = NOT DETECTED ABOVE REPORTING LIMIT
; = REPORTING LIMIT; DEFINED AS THE PRACTICAL QUANTITATION LIMIT PLUS ANY DILUTION, POSITIVE VALUES BELOW THIS LIMIT WERE NOT REPORTED.

ATAS 875 Fee Fee Road • Maryland Heights, MO 63043 • (314) 434-4570 - FAX (314) 434-0080

CLIENT: DAMES & MOORE
721 EMERSON ROAD, SUITE 220
ST. LOUIS, MO 63141
ATTN: GEORGE JONES

REPORT: 2891901VO(720)

DATE : 02-16-00

SAMPLE MATRIX : WATER
ATAS # : 28919.09
DATE SUBMITTED: 02-09-00
DATE ANALYZED : 02-10-00

METHOD REF.: SW846-8260B, EPA METHODOLOGY
PROJECT # : 27994-022-045 - PENTAIR
SAMPLE ID : MW-11

RESULTS REPORTED IN ug/L OR Parts Per Billion (PPB)

VOLATILES	R.L.	RESULTS	VOLATILES	R.L.	RESULTS
XYLENE (TOTAL)	5	ND	TOLUENE	5	ND
DICHLORODIFLUOROMETHANE	10	ND	trans-1,3-DICHLOROPROPENE	5	ND
CHLOROMETHANE	10	ND	1,1,2-TRICHLOROETHANE	5	ND
VINYL CHLORIDE	10	ND	TETRACHLOROETHENE	5	ND
BROMOMETHANE	10	ND	1,3-DICHLOROPROPANE	5	ND
CHLOROETHANE	10	ND	2-HEXANONE	10	ND
TRICHLOROFLUOROMETHANE	10	ND	DIBROMOCHLOROMETHANE	5	ND
1,1-DICHLOROETHENE	5	ND	1,2-DIBROMOETHANE	5	ND
ACETONE	10	ND	CHLOROBENZENE	5	ND
IODOMETHANE	10	ND	1,1,1,2-TETRACHLOROETHANE	5	ND
CARBON DISULFIDE	5	ND	ETHYLBENZENE	5	ND
METHYLENE CHLORIDE	5	8 B	STYRENE	5	ND
trans-1,2-DICHLOROETHENE	5	ND	BROMOFORM	5	ND
M TL TERT-BUTYL ETHER	10	ND	ISOPROPYLBENZENE	5	ND
1, DICHLOROETHANE	5	ND	1,1,2,2-TETRACHLOROETHANE	5	ND
VINYL ACETATE	10	ND	BROMOBENZENE	5	ND
2,2-DICHLOROPROPANE	5	ND	1,2,3-TRICHLOROPROPANE	5	ND
cis-1,2-DICHLOROETHENE	5	ND	n-PROPYLBENZENE	5	ND
2-BUTANONE	10	ND	2-CHLOROTOLUENE	5	ND
BROMOCHLOROMETHANE	5	ND	1,3,5-TRIMETHYLBENZENE	5	ND
CHLOROFORM	5	ND	4-CHLOROTOLUENE	5	ND
1,1,1-TRICHLOROETHANE	5	ND	TERT-BUTYLBENZENE	5	ND
CARBON TETRACHLORIDE	5	ND	1,2,4-TRIMETHYLBENZENE	5	ND
1,1-DICHLOROPROPENE	5	ND	sec-BUTYLBENZENE	5	ND
BENZENE	5	ND	1,3-DICHLOROBENZENE	5	ND
1,2-DICHLOROETHANE	5	ND	p-ISOPROPYLTOLUENE	5	ND
TRICHLOROETHENE	25	430	1,4-DICHLOROBENZENE	5	ND
1,2-DICHLOROPROPANE	5	ND	n-BUTYLBENZENE	5	ND
DIBROMOMETHANE	5	ND	1,2-DICHLOROBENZENE	5	ND
BROMODICHLOROMETHANE	5	ND	1,2-DIBROMO-3-CHLOROPROPANE	5	ND
cis-1,3-DICHLOROPROPENE	5	ND	1,2,4-TRICHLOROBENZENE	5	ND
4-METHYL-2-PENTANONE	10	ND	HEXACHLOROBUTADIENE	5	ND
1,2,3-TRICHLOROBENZENE	5	ND	NAPHTHALENE	5	ND

QA/QC SURROGATE RECOVERIES

TOLUENE-d8(80-116) 103% BROMOFLUOROBENZENE(86-115) 99%
1,2-DICHLOROETHANE-D4(76-114) 88%

B = ANALYTE DETECTED IN METHOD BLANK, POSSIBLY BELOW THE REPORTING LIMIT.
ND = NOT DETECTED ABOVE REPORTING LIMIT
RL = REPORTING LIMIT; DEFINED AS THE PRACTICAL QUANTITATION LIMIT PLUS ANY DILUTION, POSITIVE VALUES BELOW THIS LIMIT WERE NOT REPORTED.

ATAS 875 Fee Fee Road • Maryland Heights, MO 63043 • (314) 434-4570 - FAX (314) 434-0080

LIENT: DAMES & MOORE
721 EMERSON ROAD, SUITE 220
ST. LOUIS, MO 63141
ATTN: GEORGE JONES

REPORT: 2891901VO(720)

DATE : 02-16-00

SAMPLE MATRIX : WATER
ATAS # : 28919.08
DATE SUBMITTED: 02-09-00
DATE ANALYZED : 02-10-00

METHOD REF.: SW846-8260B, EPA METHODOLOGY
PROJECT # : 27994-022-045 - PENTAIR
SAMPLE ID : MW-10

RESULTS REPORTED IN ug/L OR Parts Per Billion (PPB)

OLATILES	R.L.	RESULTS	VOLATILES	R.L.	RESULTS
YLENE (TOTAL)	5	ND	TOLUENE	5	ND
ICHLORODIFLUOROMETHANE	10	ND	trans-1,3-DICHLOROPROPENE	5	ND
HLOROMETHANE	10	ND	1,1,2-TRICHLOROETHANE	5	ND
INYL CHLORIDE	10	ND	TETRACHLOROETHENE	5	ND
ROMOMETHANE	10	ND	1,3-DICHLOROPROPANE	5	ND
HLOROETHANE	10	ND	2-HEXANONE	10	ND
RICHLOROFLUOROMETHANE	10	ND	DIBROMOCHLOROMETHANE	5	ND
,1-DICHLOROETHENE	5	ND	1,2-DIBROMOETHANE	5	ND
CETONE	10	ND	CHLOROBENZENE	5	ND
ODOMETHANE	10	ND	1,1,1,2-TETRACHLOROETHANE	5	ND
ARBON DISULFIDE	5	ND	ETHYLBENZENE	5	ND
ETHYLENE CHLORIDE	5	9 B	STYRENE	5	ND
rans-1,2-DICHLOROETHENE	5	ND	BROMOFORM	5	ND
E TERT-BUTYL ETHER	10	ND	ISOPROPYLBENZENE	5	ND
,1 CHLOROETHANE	5	ND	1,1,2,2-TETRACHLOROETHANE	5	ND
INYL ACETATE	10	ND	BROMOBENZENE	5	ND
,2-DICHLOROPROPANE	5	ND	1,2,3-TRICHLOROPROPANE	5	ND
is-1,2-DICHLOROETHENE	5	ND	n-PROPYLBENZENE	5	ND
-BUTANONE	10	ND	2-CHLOROTOLUENE	5	ND
ROMOCHLOROMETHANE	5	ND	1,3,5-TRIMETHYLBENZENE	5	ND
HLOROFORM	5	ND	4-CHLOROTOLUENE	5	ND
,1,1-TRICHLOROETHANE	5	ND	TERT-BUTYLBENZENE	5	ND
ARBON TETRACHLORIDE	5	ND	1,2,4-TRIMETHYLBENZENE	5	ND
,1-DICHLOROPROPENE	5	ND	sec-BUTYLBENZENE	5	ND
ENZENE	5	ND	1,3-DICHLOROBENZENE	5	ND
,2-DICHLOROETHANE	5	ND	p-ISOPROPYLTOLUENE	5	ND
RICHLOROETHENE	5	130	1,4-DICHLOROBENZENE	5	ND
,2-DICHLOROPROPANE	5	ND	n-BUTYLBENZENE	5	ND
IBROMOMETHANE	5	ND	1,2-DICHLOROBENZENE	5	ND
ROMODICHLOROMETHANE	5	ND	1,2-DIBROMO-3-CHLOROPROPANE	5	ND
is-1,3-DICHLOROPROPENE	5	ND	1,2,4-TRICHLOROBENZENE	5	ND
-METHYL-2-PENTANONE	10	ND	HEXACHLOROBUTADIENE	5	ND
,2,3-TRICHLOROBENZENE	5	ND	NAPHTHALENE	5	ND

QA/QC SURROGATE RECOVERIES

TOLUENE-d8(80-116) 106% BROMOFLUOROBENZENE(86-115) 101%
1,2-DICHLOROETHANE-D4(76-114) 87%

= ANALYTE DETECTED IN METHOD BLANK, POSSIBLY BELOW THE REPORTING LIMIT.
) = NOT DETECTED ABOVE REPORTING LIMIT
. = REPORTING LIMIT; DEFINED AS THE PRACTICAL QUANTITATION LIMIT PLUS ANY DILUTION, POSITIVE VALUES BELOW THIS LIMIT WERE NOT REPORTED.

ATAS 875 Fee Fee Road • Maryland Heights, MO 63043 • (314) 434-4570 - FAX (314) 434-0080

LIENT: DAMES & MOORE
721 EMERSON ROAD, SUITE 220
ST. LOUIS, MO 63141
ATTN: GEORGE JONES

REPORT: 2891901VO(720)
DATE : 02-16-00

SAMPLE MATRIX : WATER
ATAS # : 28919.07
DATE SUBMITTED: 02-09-00
DATE ANALYZED : 02-10-00

METHOD REF.: SW846-8260B, EPA METHODOLOGY
PROJECT # : 27994-022-045 - PENTAIR
SAMPLE ID : MW-8

RESULTS REPORTED IN ug/L OR Parts Per Billion (PPB)

OLATILES	R.L.	RESULTS	VOLATILES	R.L.	RESULTS
YLENE (TOTAL)	5	ND	TOLUENE	5	ND
ICHLORODIFLUOROMETHANE	10	ND	trans-1,3-DICHLOROPROPENE	5	ND
HLOROMETHANE	10	ND	1,1,2-TRICHLOROETHANE	5	ND
INYL CHLORIDE	10	ND	TETRACHLOROETHENE	5	ND
ROMOMETHANE	10	ND	1,3-DICHLOROPROPANE	5	ND
HLOROETHANE	10	ND	2-HEXANONE	10	ND
RICHLOROFLUOROMETHANE	10	ND	DIBROMOCHLOROMETHANE	5	ND
,1-DICHLOROETHENE	5	ND	1,2-DIBROMOETHANE	5	ND
CETONE	10	ND	CHLOROBENZENE	5	ND
ODOMETHANE	10	ND	1,1,1,2-TETRACHLOROETHANE	5	ND
ARBON DISULFIDE	5	ND	ETHYLBENZENE	5	ND
ETHYLENE CHLORIDE	5	8 B	STYRENE	5	ND
rans-1,2-DICHLOROETHENE	5	ND	BROMOFORM	5	ND
E , TERT-BUTYL ETHER	10	ND	ISOPROPYLBENZENE	5	ND
,1-DICHLOROETHANE	5	ND	1,1,2,2-TETRACHLOROETHANE	5	ND
INYL ACETATE	10	ND	BROMOBENZENE	5	ND
,2-DICHLOROPROPANE	5	ND	1,2,3-TRICHLOROPROPANE	5	ND
is-1,2-DICHLOROETHENE	5	ND	n-PROPYLBENZENE	5	ND
-BUTANONE	10	ND	2-CHLOROTOLUENE	5	ND
ROMOCHLOROMETHANE	5	ND	1,3,5-TRIMETHYLBENZENE	5	ND
HLOROFORM	5	ND	4-CHLOROTOLUENE	5	ND
,1,1-TRICHLOROETHANE	5	ND	TERT-BUTYLBENZENE	5	ND
ARBON TETRACHLORIDE	5	ND	1,2,4-TRIMETHYLBENZENE	5	ND
,1-DICHLOROPROPENE	5	ND	sec-BUTYLBENZENE	5	ND
ENZENE	5	ND	1,3-DICHLOROBENZENE	5	ND
,2-DICHLOROETHANE	5	ND	p-ISOPROPYLTOLUENE	5	ND
RICHLOROETHENE	5	ND	1,4-DICHLOROBENZENE	5	ND
,2-DICHLOROPROPANE	5	ND	n-BUTYLBENZENE	5	ND
IBROMOMETHANE	5	ND	1,2-DICHLOROBENZENE	5	ND
ROMODICHLOROMETHANE	5	ND	1,2-DIBROMO-3-CHLOROPROPANE	5	ND
is-1,3-DICHLOROPROPENE	5	ND	1,2,4-TRICHLOROBENZENE	5	ND
-METHYL-2-PENTANONE	10	ND	HEXACHLOROBUTADIENE	5	ND
,2,3-TRICHLOROBENZENE	5	ND	NAPHTHALENE	5	ND

QA/QC SURROGATE RECOVERIES

TOLUENE-d8(80-116) 104% BROMOFLUOROBENZENE(86-115) 100%
1,2-DICHLOROETHANE-D4(76-114) 86%

= ANALYTE DETECTED IN METHOD BLANK, POSSIBLY BELOW THE REPORTING LIMIT.
D = NOT DETECTED ABOVE REPORTING LIMIT
L = REPORTING LIMIT; DEFINED AS THE PRACTICAL QUANTITATION LIMIT PLUS ANY DILUTION, POSITIVE VALUES BELOW THIS LIMIT WERE NOT REPORTED.

ATAS 875 Fee Fee Road • Maryland Heights, MO 63043 • (314) 434-4570 - FAX (314) 434-0080

LIENT: DAMES & MOORE
721 EMERSON ROAD, SUITE 220
ST. LOUIS, MO 63141
ATTN: DAVID HEINZE

REPORT: 28381VOA(522)
DATE : 12-10-99

SAMPLE MATRIX : WATER
ATAS # : 28381.07
DATE SUBMITTED: 11-30-99
DATE ANALYZED : 12-03-99

METHOD REF.: SW846-8260B/OA1, EPA METHODOLOGY
PROJECT # : PENTAIR
SAMPLE ID : MW-7

RESULTS REPORTED IN ug/L OR Parts Per Billion (PPB)

OLATILES	R.L.	RESULTS	VOLATILES	R.L.	RESULTS
YLENE (TOTAL)	5	ND	TOLUENE	5	ND
ICHLORODIFLUOROMETHANE	10	ND	trans-1,3-DICHLOROPROPENE	5	ND
HLOROMETHANE	10	ND	1,1,2-TRICHLOROETHANE	5	ND
INYL CHLORIDE	10	ND	TETRACHLOROETHENE	5	ND
ROMOMETHANE	10	ND	1,3-DICHLOROPROPANE	5	ND
HLOROETHANE	10	ND	2-HEXANONE	10	ND
RICHLOROFLUOROMETHANE	10	ND	DIBROMOCHLOROMETHANE	5	ND
,1-DICHLOROETHENE	5	ND	1,2-DIBROMOETHANE	5	ND
CETONE	10	ND	CHLOROBENZENE	5	ND
DDOMETHANE	10	ND	1,1,1,2-TETRACHLOROETHANE	5	ND
ARBON DISULFIDE	5	ND	ETHYLBENZENE	5	ND
ETHYLENE CHLORIDE	5	ND	STYRENE	5	ND
rans-1,2-DICHLOROETHENE	5	ND	BROMOFORM	5	ND
ET[illegible] TERT-BUTYL ETHER	10	ND	ISOPROPYLBENZENE	5	ND
[illegible] CHLOROETHANE	5	ND	1,1,2,2-TETRACHLOROETHANE	5	ND
INYL ACETATE	10	ND	BROMOBENZENE	5	ND
,2-DICHLOROPROPANE	5	ND	1,2,3-TRICHLOROPROPANE	5	ND
is-1,2-DICHLOROETHENE	5	ND	n-PROPYLBENZENE	5	ND
-BUTANONE	10	ND	2-CHLOROTOLUENE	5	ND
ROMOCHLOROMETHANE	5	ND	1,3,5-TRIMETHYLBENZENE	5	ND
HLOROFORM	5	110	4-CHLOROTOLUENE	5	ND
,1,1-TRICHLOROETHANE	5	ND	TERT-BUTYLBENZENE	5	ND
ARBON TETRACHLORIDE	5	46	1,2,4-TRIMETHYLBENZENE	5	ND
,1-DICHLOROPROPENE	5	ND	sec-BUTYLBENZENE	5	ND
ENZENE	5	ND	1,3-DICHLOROBENZENE	5	ND
,2-DICHLOROETHANE	5	ND	p-ISOPROPYLTOLUENE	5	ND
RICHLOROETHENE	5	7	1,4-DICHLOROBENZENE	5	ND
,2-DICHLOROPROPANE	5	ND	n-BUTYLBENZENE	5	ND
IBROMOMETHANE	5	ND	1,2-DICHLOROBENZENE	5	ND
ROMODICHLOROMETHANE	5	ND	1,2-DIBROMO-3-CHLOROPROPANE	5	ND
is-1,3-DICHLOROPROPENE	5	ND	1,2,4-TRICHLOROBENZENE	5	ND
-METHYL-2-PENTANONE	10	ND	HEXACHLOROBUTADIENE	5	ND
,2,3-TRICHLOROBENZENE	5	ND	NAPHTHALENE	5	ND

QA/QC SURROGATE RECOVERIES

TOLUENE-d8(80-116) 100% BROMOFLUOROBENZENE(86-115) 107%
1,2-DICHLOROETHANE-D4(76-114) 95%

- ANALYTE DETECTED IN METHOD BLANK, POSSIBLY BELOW THE REPORTING LIMIT.
) = NOT DETECTED ABOVE REPORTING LIMIT
L = REPORTING LIMIT; DEFINED AS THE PRACTICAL QUANTITATION LIMIT PLUS ANY DILUTION, POSITIVE VALUES BELOW THIS LIMIT WERE NOT REPORTED.

ATAS 875 Fee Fee Road • Maryland Heights, MO 63043 • (314) 434-4570 - FAX (314) 434-0080

LIENT: DAMES & MOORE
721 EMERSON ROAD, SUITE 220
ST. LOUIS, MO 63141
ATTN: DAVID HEINZE

REPORT: 28381VOA(522)

DATE : 12-10-99

SAMPLE MATRIX : WATER
ATAS # : 28381.06
DATE SUBMITTED: 11-30-99
DATE ANALYZED : 12-03-99

METHOD REF.: SW846-8260B/OA1, EPA METHODOLOGY
PROJECT # : PENTAIR
SAMPLE ID : MW-6

RESULTS REPORTED IN ug/L OR Parts Per Billion (PPB)

VOLATILES	R.L.	RESULTS	VOLATILES	R.L.	RESULTS
YLENE (TOTAL)	5	ND	TOLUENE	5	ND
DICHLORODIFLUOROMETHANE	10	ND	trans-1,3-DICHLOROPROPENE	5	ND
HLOROMETHANE	10	ND	1,1,2-TRICHLOROETHANE	5	ND
INYL CHLORIDE	10	ND	TETRACHLOROETHENE	5	ND
BROMOMETHANE	10	ND	1,3-DICHLOROPROPANE	5	ND
HLOROETHANE	10	ND	2-HEXANONE	10	ND
RICHLOROFLUOROMETHANE	10	ND	DIBROMOCHLOROMETHANE	5	ND
,1-DICHLOROETHENE	5	ND	1,2-DIBROMOETHANE	5	ND
ACETONE	10	ND	CHLOROBENZENE	5	ND
ODOMETHANE	10	ND	1,1,1,2-TETRACHLOROETHANE	5	ND
ARBON DISULFIDE	5	ND	ETHYLBENZENE	5	ND
ETHYLENE CHLORIDE	5	ND	STYRENE	5	ND
rans-1,2-DICHLOROETHENE	5	ND	BROMOFORM	5	ND
F L TERT-BUTYL ETHER	10	ND	ISOPROPYLBENZENE	5	ND
, ICHLOROETHANE	5	ND	1,1,2,2-TETRACHLOROETHANE	5	ND
INYL ACETATE	10	ND	BROMOBENZENE	5	ND
,2-DICHLOROPROPANE	5	ND	1,2,3-TRICHLOROPROPANE	5	ND
is-1,2-DICHLOROETHENE	5	ND	n-PROPYLBENZENE	5	ND
-BUTANONE	10	ND	2-CHLOROTOLUENE	5	ND
BROMOCHLOROMETHANE	5	ND	1,3,5-TRIMETHYLBENZENE	5	ND
HLOROFORM	5	ND	4-CHLOROTOLUENE	5	ND
,1,1-TRICHLOROETHANE	5	ND	TERT-BUTYLBENZENE	5	ND
ARBON TETRACHLORIDE	5	ND	1,2,4-TRIMETHYLBENZENE	5	ND
,1-DICHLOROPROPENE	5	ND	sec-BUTYLBENZENE	5	ND
ENZENE	5	ND	1,3-DICHLOROBENZENE	5	ND
,2-DICHLOROETHANE	5	ND	p-ISOPROPYLTOLUENE	5	ND
RICHLOROETHENE	5	ND	1,4-DICHLOROBENZENE	5	ND
,2-DICHLOROPROPANE	5	ND	n-BUTYLBENZENE	5	ND
IBROMOMETHANE	5	ND	1,2-DICHLOROBENZENE	5	ND
BROMODICHLOROMETHANE	5	ND	1,2-DIBROMO-3-CHLOROPROPANE	5	ND
is-1,3-DICHLOROPROPENE	5	ND	1,2,4-TRICHLOROBENZENE	5	ND
-METHYL-2-PENTANONE	10	ND	HEXACHLOROBUTADIENE	5	ND
,2,3-TRICHLOROBENZENE	5	ND	NAPHTHALENE	5	ND

QA/QC SURROGATE RECOVERIES

TOLUENE-d8(80-116) 103% BROMOFLUOROBENZENE(86-115) 108%
1,2-DICHLOROETHANE-D4(76-114) 96%

B = ANALYTE DETECTED IN METHOD BLANK, POSSIBLY BELOW THE REPORTING LIMIT.
ND = NOT DETECTED ABOVE REPORTING LIMIT
RL = REPORTING LIMIT; DEFINED AS THE PRACTICAL QUANTITATION LIMIT PLUS ANY DILUTION, POSITIVE VALUES BELOW THIS LIMIT WERE NOT REPORTED.

ATAS 875 Fee Fee Road • Maryland Heights, MO 63043 • (314) 434-4570 - FAX (314) 434-0080

LIENT: DAMES & MOORE
721 EMERSON ROAD, SUITE 220
ST. LOUIS, MO 63141
ATTN: DAVID HEINZE

REPORT: 28381VOA(522)
DATE : 12-10-99

SAMPLE MATRIX : WATER
ATAS # : 28381.05
DATE SUBMITTED: 11-30-99
DATE ANALYZED : 12-03-99

METHOD REF.: SW846-8260B/OA1, EPA METHODOLOGY
PROJECT # : PENTAIR
SAMPLE ID : MW-5

RESULTS REPORTED IN ug/L OR Parts Per Billion (PPB)

OLATILES	R.L.	RESULTS	VOLATILES	R.L.	RESULTS
LENE (TOTAL)	5	ND	TOLUENE	5	ND
CHLORODIFLUOROMETHANE	10	ND	trans-1,3-DICHLOROPROPENE	5	ND
LOROMETHANE	10	ND	1,1,2-TRICHLOROETHANE	5	ND
NYL CHLORIDE	10	ND	TETRACHLOROETHENE	5	ND
OMOMETHANE	10	ND	1,3-DICHLOROPROPANE	5	ND
LOROETHANE	10	ND	2-HEXANONE	10	ND
ICHLOROFLUOROMETHANE	10	ND	DIBROMOCHLOROMETHANE	5	ND
1-DICHLOROETHENE	5	ND	1,2-DIBROMOETHANE	5	ND
ETONE	10	ND	CHLOROBENZENE	5	ND
DOMETHANE	10	ND	1,1,1,2-TETRACHLOROETHANE	5	ND
RBON DISULFIDE	5	ND	ETHYLBENZENE	5	ND
THYLENE CHLORIDE	5	ND	STYRENE	5	ND
ans-1,2-DICHLOROETHENE	5	ND	BROMOFORM	5	ND
TF TERT-BUTYL ETHER	10	ND	ISOPROPYLBENZENE	5	ND
1 HLOROETHANE	5	ND	1,1,2,2-TETRACHLOROETHANE	5	ND
NYL ACETATE	10	ND	BROMOBENZENE	5	ND
2-DICHLOROPROPANE	5	ND	1,2,3-TRICHLOROPROPANE	5	ND
s-1,2-DICHLOROETHENE	5	ND	n-PROPYLBENZENE	5	ND
BUTANONE	10	ND	2-CHLOROTOLUENE	5	ND
OMOCHLOROMETHANE	5	ND	1,3,5-TRIMETHYLBENZENE	5	ND
LOROFORM	5	ND	4-CHLOROTOLUENE	5	ND
1,1-TRICHLOROETHANE	5	ND	TERT-BUTYLBENZENE	5	ND
RBON TETRACHLORIDE	5	ND	1,2,4-TRIMETHYLBENZENE	5	ND
1-DICHLOROPROPENE	5	ND	sec-BUTYLBENZENE	5	ND
NZENE	5	ND	1,3-DICHLOROBENZENE	5	ND
2-DICHLOROETHANE	5	ND	p-ISOPROPYLTOLUENE	5	ND
ICHLOROETHENE	5	ND	1,4-DICHLOROBENZENE	5	ND
2-DICHLOROPROPANE	5	ND	n-BUTYLBENZENE	5	ND
BROMOMETHANE	5	ND	1,2-DICHLOROBENZENE	5	ND
OMODICHLOROMETHANE	5	ND	1,2-DIBROMO-3-CHLOROPROPANE	5	ND
s-1,3-DICHLOROPROPENE	5	ND	1,2,4-TRICHLOROBENZENE	5	ND
METHYL-2-PENTANONE	10	ND	HEXACHLOROBUTADIENE	5	ND
2,3-TRICHLOROBENZENE	5	ND	NAPHTHALENE	5	ND

QA/QC SURROGATE RECOVERIES

TOLUENE-d8(80-116) 101% BROMOFLUOROBENZENE(86-115) 102%
1,2-DICHLOROETHANE-D4(76-114) 93%

- NALYTE DETECTED IN METHOD BLANK, POSSIBLY BELOW THE REPORTING LIMIT.
- NOT DETECTED ABOVE REPORTING LIMIT
- REPORTING LIMIT; DEFINED AS THE PRACTICAL QUANTITATION LIMIT PLUS ANY DILUTION, POSITIVE VALUES BELOW THIS LIMIT WERE NOT REPORTED.

ATAS 875 Fee Fee Road • Maryland Heights, MO 63043 • (314) 434-4570 - FAX (314) 434-0080

LIENT: DAMES & MOORE
721 EMERSON ROAD, SUITE 220
ST. LOUIS, MO 63141
ATTN: DAVID HEINZE

REPORT: 28381VOA(522)

DATE : 12-10-99

SAMPLE MATRIX : WATER
ATAS # : 28381.04
DATE SUBMITTED: 11-30-99
DATE ANALYZED : 12-03-99

METHOD REF.: SW846-8260B/OA1, EPA METHODOLOGY
PROJECT # : PENTAIR
SAMPLE ID : MW-4

RESULTS REPORTED IN ug/L OR Parts Per Billion (PPB)

OLATILES	R.L.	RESULTS
YLENE (TOTAL)	5	ND
ICHLORODIFLUOROMETHANE	10	ND
HLOROMETHANE	10	ND
INYL CHLORIDE	10	ND
ROMOMETHANE	10	ND
HLOROETHANE	10	ND
RICHLOROFLUOROMETHANE	10	ND
,1-DICHLOROETHENE	5	ND
CETONE	10	ND
ODOMETHANE	10	ND
ARBON DISULFIDE	5	ND
ETHYLENE CHLORIDE	5	ND
rans-1,2-DICHLOROETHENE	5	ND
E , TERT-BUTYL ETHER	10	ND
,1 ICHLOROETHANE	5	ND
INYL ACETATE	10	ND
,2-DICHLOROPROPANE	5	ND
is-1,2-DICHLOROETHENE	5	ND
-BUTANONE	10	ND
ROMOCHLOROMETHANE	5	ND
HLOROFORM	5	5
,1,1-TRICHLOROETHANE	5	ND
ARBON TETRACHLORIDE	5	ND
,1-DICHLOROPROPENE	5	ND
ENZENE	5	ND
,2-DICHLOROETHANE	5	ND
RICHLOROETHENE	5	ND
,2-DICHLOROPROPANE	5	ND
IBROMOMETHANE	5	ND
ROMODICHLOROMETHANE	5	ND
is-1,3-DICHLOROPROPENE	5	ND
-METHYL-2-PENTANONE	10	ND
,2,3-TRICHLOROBENZENE	5	ND

VOLATILES	R.L.	RESULTS
TOLUENE	5	ND
trans-1,3-DICHLOROPROPENE	5	ND
1,1,2-TRICHLOROETHANE	5	ND
TETRACHLOROETHENE	5	ND
1,3-DICHLOROPROPANE	5	ND
2-HEXANONE	10	ND
DIBROMOCHLOROMETHANE	5	ND
1,2-DIBROMOETHANE	5	ND
CHLOROBENZENE	5	ND
1,1,1,2-TETRACHLOROETHANE	5	ND
ETHYLBENZENE	5	ND
STYRENE	5	ND
BROMOFORM	5	ND
ISOPROPYLBENZENE	5	ND
1,1,2,2-TETRACHLOROETHANE	5	ND
BROMOBENZENE	5	ND
1,2,3-TRICHLOROPROPANE	5	ND
n-PROPYLBENZENE	5	ND
2-CHLOROTOLUENE	5	ND
1,3,5-TRIMETHYLBENZENE	5	ND
4-CHLOROTOLUENE	5	ND
TERT-BUTYLBENZENE	5	ND
1,2,4-TRIMETHYLBENZENE	5	ND
sec-BUTYLBENZENE	5	ND
1,3-DICHLOROBENZENE	5	ND
p-ISOPROPYLTOLUENE	5	ND
1,4-DICHLOROBENZENE	5	ND
n-BUTYLBENZENE	5	ND
1,2-DICHLOROBENZENE	5	ND
1,2-DIBROMO-3-CHLOROPROPANE	5	ND
1,2,4-TRICHLOROBENZENE	5	ND
HEXACHLOROBUTADIENE	5	ND
NAPHTHALENE	5	ND

QA/QC SURROGATE RECOVERIES

TOLUENE-d8(80-116) 102% BROMOFLUOROBENZENE(86-115) 105%
1,2-DICHLOROETHANE-D4(76-114) 94%

: = ANALYTE DETECTED IN METHOD BLANK, POSSIBLY BELOW THE REPORTING LIMIT.
D = NOT DETECTED ABOVE REPORTING LIMIT
L = REPORTING LIMIT; DEFINED AS THE PRACTICAL QUANTITATION LIMIT PLUS ANY DILUTION, POSITIVE VALUES BELOW THIS LIMIT WERE NOT REPORTED.

ATAS 875 Fee Fee Road • Maryland Heights, MO 63043 • (314) 434-4570 - FAX (314) 434-0080

CLIENT: DAMES & MOORE
721 EMERSON ROAD, SUITE 220
ST. LOUIS, MO 63141
ATTN: DAVID HEINZE

REPORT: 28381VOA(522)
DATE : 12-10-99

SAMPLE MATRIX : WATER
ATAS # : 28381.03
DATE SUBMITTED: 11-30-99
DATE ANALYZED : 12-03-99

METHOD REF.: SW846-8260B/OA1, EPA METHODOLOGY
PROJECT # : PENTAIR
SAMPLE ID : MW-3

RESULTS REPORTED IN ug/L OR Parts Per Billion (PPB)

VOLATILES	R.L.	RESULTS	VOLATILES	R.L.	RESULTS
XYLENE (TOTAL)	5	ND	TOLUENE	5	ND
DICHLORODIFLUOROMETHANE	10	ND	trans-1,3-DICHLOROPROPENE	5	ND
CHLOROMETHANE	10	ND	1,1,2-TRICHLOROETHANE	5	ND
VINYL CHLORIDE	10	ND	TETRACHLOROETHENE	5	ND
BROMOMETHANE	10	ND	1,3-DICHLOROPROPANE	5	ND
CHLOROETHANE	10	ND	2-HEXANONE	10	ND
TRICHLOROFLUOROMETHANE	10	ND	DIBROMOCHLOROMETHANE	5	ND
1,1-DICHLOROETHENE	5	ND	1,2-DIBROMOETHANE	5	ND
ACETONE	10	ND	CHLOROBENZENE	5	ND
IODOMETHANE	10	ND	1,1,1,2-TETRACHLOROETHANE	5	ND
CARBON DISULFIDE	5	ND	ETHYLBENZENE	5	ND
METHYLENE CHLORIDE	5	ND	STYRENE	5	ND
trans-1,2-DICHLOROETHENE	5	ND	BROMOFORM	5	ND
M YL TERT-BUTYL ETHER	10	ND	ISOPROPYLBENZENE	5	ND
1. DICHLOROETHANE	5	ND	1,1,2,2-TETRACHLOROETHANE	5	ND
VINYL ACETATE	10	ND	BROMOBENZENE	5	ND
2,2-DICHLOROPROPANE	5	ND	1,2,3-TRICHLOROPROPANE	5	ND
cis-1,2-DICHLOROETHENE	5	ND	n-PROPYLBENZENE	5	ND
2-BUTANONE	10	ND	2-CHLOROTOLUENE	5	ND
BROMOCHLOROMETHANE	5	ND	1,3,5-TRIMETHYLBENZENE	5	ND
CHLOROFORM	5	ND	4-CHLOROTOLUENE	5	ND
1,1,1-TRICHLOROETHANE	5	ND	TERT-BUTYLBENZENE	5	ND
CARBON TETRACHLORIDE	5	ND	1,2,4-TRIMETHYLBENZENE	5	ND
1,1-DICHLOROPROPENE	5	ND	sec-BUTYLBENZENE	5	ND
BENZENE	5	ND	1,3-DICHLOROBENZENE	5	ND
1,2-DICHLOROETHANE	5	ND	p-ISOPROPYLTOLUENE	5	ND
TRICHLOROETHENE	5	ND	1,4-DICHLOROBENZENE	5	ND
1,2-DICHLOROPROPANE	5	ND	n-BUTYLBENZENE	5	ND
DIBROMOMETHANE	5	ND	1,2-DICHLOROBENZENE	5	ND
BROMODICHLOROMETHANE	5	ND	1,2-DIBROMO-3-CHLOROPROPANE	5	ND
cis-1,3-DICHLOROPROPENE	5	ND	1,2,4-TRICHLOROBENZENE	5	ND
4-METHYL-2-PENTANONE	10	ND	HEXACHLOROBUTADIENE	5	ND
1,2,3-TRICHLOROBENZENE	5	ND	NAPHTHALENE	5	ND

QA/QC SURROGATE RECOVERIES

TOLUENE-d8(80-116) 102% BROMOFLUOROBENZENE(86-115) 109%
1,2-DICHLOROETHANE-D4(76-114) 94%

B = ANALYTE DETECTED IN METHOD BLANK, POSSIBLY BELOW THE REPORTING LIMIT.
ND = NOT DETECTED ABOVE REPORTING LIMIT
RL = REPORTING LIMIT; DEFINED AS THE PRACTICAL QUANTITATION LIMIT PLUS ANY DILUTION, POSITIVE VALUES BELOW THIS LIMIT WERE NOT REPORTED.

ATAS 875 Fee Fee Road • Maryland Heights, MO 63043 • (314) 434-4570 - FAX (314) 434-0080

LIENT: DAMES & MOORE
721 EMERSON ROAD, SUITE 220
ST. LOUIS, MO 63141
ATTN: DAVID HEINZE

REPORT: 28381VOA(522)

DATE : 12-10-99

SAMPLE MATRIX : WATER
ATAS # : 28381.02
DATE SUBMITTED: 11-30-99
DATE ANALYZED : 12-03-99

METHOD REF.: SW846-8260B/OA1, EPA METHODOLOGY
PROJECT # : PENTAIR
SAMPLE ID : MW-2

RESULTS REPORTED IN ug/L OR Parts Per Billion (PPB)

OLATILES	R.L.	RESULTS	VOLATILES	R.L.	RESULTS
YLENE (TOTAL)	5	ND	TOLUENE	5	ND
ICHLORODIFLUOROMETHANE	10	ND	trans-1,3-DICHLOROPROPENE	5	ND
HLOROMETHANE	10	ND	1,1,2-TRICHLOROETHANE	5	ND
INYL CHLORIDE	10	ND	TETRACHLOROETHENE	5	ND
ROMOMETHANE	10	ND	1,3-DICHLOROPROPANE	5	ND
HLOROETHANE	10	ND	2-HEXANONE	10	ND
RICHLOROFLUOROMETHANE	10	ND	DIBROMOCHLOROMETHANE	5	ND
,1-DICHLOROETHENE	5	ND	1,2-DIBROMOETHANE	5	ND
CETONE	10	ND	CHLOROBENZENE	5	ND
DDOMETHANE	10	ND	1,1,1,2-TETRACHLOROETHANE	5	ND
ARBON DISULFIDE	5	ND	ETHYLBENZENE	5	ND
ETHYLENE CHLORIDE	5	ND	STYRENE	5	ND
rans-1,2-DICHLOROETHENE	5	ND	BROMOFORM	5	ND
BT TERT-BUTYL ETHER	10	ND	ISOPROPYLBENZENE	5	ND
,1 CHLOROETHANE	5	ND	1,1,2,2-TETRACHLOROETHANE	5	ND
INYL ACETATE	10	ND	BROMOBENZENE	5	ND
,2-DICHLOROPROPANE	5	ND	1,2,3-TRICHLOROPROPANE	5	ND
is-1,2-DICHLOROETHENE	5	8	n-PROPYLBENZENE	5	ND
-BUTANONE	10	ND	2-CHLOROTOLUENE	5	ND
ROMOCHLOROMETHANE	5	ND	1,3,5-TRIMETHYLBENZENE	5	ND
HLOROFORM	5	ND	4-CHLOROTOLUENE	5	ND
,1,1-TRICHLOROETHANE	5	ND	TERT-BUTYLBENZENE	5	ND
ARBON TETRACHLORIDE	5	ND	1,2,4-TRIMETHYLBENZENE	5	ND
,1-DICHLOROPROPENE	5	ND	sec-BUTYLBENZENE	5	ND
ENZENE	5	ND	1,3-DICHLOROBENZENE	5	ND
,2-DICHLOROETHANE	5	ND	p-ISOPROPYLTOLUENE	5	ND
RICHLOROETHENE	5	190	1,4-DICHLOROBENZENE	5	ND
,2-DICHLOROPROPANE	5	ND	n-BUTYLBENZENE	5	ND
IBROMOMETHANE	5	ND	1,2-DICHLOROBENZENE	5	ND
ROMODICHLOROMETHANE	5	ND	1,2-DIBROMO-3-CHLOROPROPANE	5	ND
is-1,3-DICHLOROPROPENE	5	ND	1,2,4-TRICHLOROBENZENE	5	ND
-METHYL-2-PENTANONE	10	ND	HEXACHLOROBUTADIENE	5	ND
,2,3-TRICHLOROBENZENE	5	ND	NAPHTHALENE	5	ND

QA/QC SURROGATE RECOVERIES

TOLUENE-d8(80-116) 100% BROMOFLUOROBENZENE(86-115) 105%
1,2-DICHLOROETHANE-D4(76-114) 93%

= ANALYTE DETECTED IN METHOD BLANK, POSSIBLY BELOW THE REPORTING LIMIT.
D = NOT DETECTED ABOVE REPORTING LIMIT
L = REPORTING LIMIT; DEFINED AS THE PRACTICAL QUANTITATION LIMIT PLUS ANY DILUTION, POSITIVE VALUES BELOW THIS LIMIT WERE NOT REPORTED.

ATAS 875 Fee Fee Road • Maryland Heights, MO 63043 • (314) 434-4570 - FAX (314) 434-0080

LIENT: DAMES & MOORE
721 EMERSON ROAD, SUITE 220
ST. LOUIS, MO 63141
ATTN: DAVID HEINZE

REPORT: 28381VOA(522)

DATE : 12-10-99

SAMPLE MATRIX : WATER
ATAS # : 28381.01
DATE SUBMITTED: 11-30-99
DATE ANALYZED : 12-03-99

METHOD REF.: SW846-8260B/OA1, EPA METHODOLOGY
PROJECT # : PENTAIR
SAMPLE ID : MW-1

RESULTS REPORTED IN ug/L OR Parts Per Billion (PPB)

OLATILES	R.L.	RESULTS	VOLATILES	R.L.	RESULTS
LENE (TOTAL)	5	8	TOLUENE	5	ND
ICHLORODIFLUOROMETHANE	10	ND	trans-1,3-DICHLOROPROPENE	5	ND
LOROMETHANE	10	ND	1,1,2-TRICHLOROETHANE	5	ND
NYL CHLORIDE	10	ND	TETRACHLOROETHENE	5	ND
ROMOMETHANE	10	ND	1,3-DICHLOROPROPANE	5	ND
HLOROETHANE	10	ND	2-HEXANONE	10	ND
RICHLOROFLUOROMETHANE	10	ND	DIBROMOCHLOROMETHANE	5	ND
,1-DICHLOROETHENE	5	ND	1,2-DIBROMOETHANE	5	ND
CETONE	10	28	CHLOROBENZENE	5	ND
DDOMETHANE	10	ND	1,1,1,2-TETRACHLOROETHANE	5	ND
ARBON DISULFIDE	5	ND	ETHYLBENZENE	5	ND
ETHYLENE CHLORIDE	5	ND	STYRENE	5	ND
rans-1,2-DICHLOROETHENE	5	ND	BROMOFORM	5	ND
E TERT-BUTYL ETHER	10	ND	ISOPROPYLBENZENE	5	8
,1 CHLOROETHANE	5	ND	1,1,2,2-TETRACHLOROETHANE	5	ND
INYL ACETATE	10	ND	BROMOBENZENE	5	ND
,2-DICHLOROPROPANE	5	ND	1,2,3-TRICHLOROPROPANE	5	ND
is-1,2-DICHLOROETHENE	5	40	n-PROPYLBENZENE	5	14
-BUTANONE	10	ND	2-CHLOROTOLUENE	5	ND
ROMOCHLOROMETHANE	5	ND	1,3,5-TRIMETHYLBENZENE	5	20
HLOROFORM	5	ND	4-CHLOROTOLUENE	5	ND
,1,1-TRICHLOROETHANE	5	ND	TERT-BUTYLBENZENE	5	ND
ARBON TETRACHLORIDE	5	ND	1,2,4-TRIMETHYLBENZENE	5	38
,1-DICHLOROPROPENE	5	ND	sec-BUTYLBENZENE	5	6
ENZENE	5	22	1,3-DICHLOROBENZENE	5	ND
,2-DICHLOROETHANE	5	ND	p-ISOPROPYLTOLUENE	5	ND
RICHLOROETHENE	5	8	1,4-DICHLOROBENZENE	5	ND
,2-DICHLOROPROPANE	5	ND	n-BUTYLBENZENE	5	6
IBROMOMETHANE	5	ND	1,2-DICHLOROBENZENE	5	ND
ROMODICHLOROMETHANE	5	ND	1,2-DIBROMO-3-CHLOROPROPANE	5	ND
is-1,3-DICHLOROPROPENE	5	ND	1,2,4-TRICHLOROBENZENE	5	ND
-METHYL-2-PENTANONE	10	ND	HEXACHLOROBUTADIENE	5	ND
,2,3-TRICHLOROBENZENE	5	ND	NAPHTHALENE	5	ND

QA/QC SURROGATE RECOVERIES

TOLUENE-d8(80-116) 103% BROMOFLUOROBENZENE(86-115) 112%
1,2-DICHLOROETHANE-D4(76-114) 92%

: = ANALYTE DETECTED IN METHOD BLANK, POSSIBLY BELOW THE REPORTING LIMIT.
D = NOT DETECTED ABOVE REPORTING LIMIT
L = REPORTING LIMIT; DEFINED AS THE PRACTICAL QUANTITATION LIMIT PLUS ANY DILUTION, POSITIVE VALUES BELOW THIS LIMIT WERE NOT REPORTED.

ATAS 875 Fee Fee Road • Maryland Heights, MO 63043 • (314) 434-4570 - FAX (314) 434-0080

T :T: DAMES & MOORE
721 EMERSON ROAD, SUITE 220
ST. LOUIS, MO 63141
ATTN: DAVID HEINZE

REPORT: 2836601PC(717)

DATE : 12-08-99

SAMPLE MATRIX : SOIL
ATAS # : 28366.02
DATE SUBMITTED: 11-29-99
DATE EXTRACTED: 11-30-99
DATE ANALYZED : 11-30-99 and 12-01-99
METHOD REF. : SW846-8082, EPA METHODOLOGY
PROJECT : PENTAIR
SAMPLE ID : MW-1(5')

RESULTS REPORTED IN ug/Kg OR Parts Per Billion (PPB)

PCB'S	REPORTING LIMIT	RESULTS
AROCLOR 1016	50.0	ND
AROCLOR 1221	50.0	ND
AROCLOR 1232	50.0	ND
AROCLOR 1242	50.0	ND
AROCLOR 1248	50.0	ND
AROCLOR 1254	50.0	ND
AROCLOR 1260	50.0	ND
TOTAL PCBs		ND

QA/QC SURROGATE RECOVERY

DECACHLOROBIPHENYL(30-150)	21 %
TETRACHLORO-M-XYLENE(30-150)	97 %

) OT DETECTED ABOVE REPORTING LIMIT
) NALYTE DETECTED IN METHOD BLANK POSSIBLY BELOW THE REPORTING LIMIT.

ATAS 875 Fee Fee Road • Maryland Heights, MO 63043 • (314) 434-4570 - FAX (314) 434-0080

IENT: DAMES & MOORE
721 EMERSON ROAD, SUITE 220
ST. LOUIS, MO 63141
ATTN: GEORGE JONES

REPORT: 2891901MT(720)

DATE : 02-17-00

SAMPLE MATRIX : SOIL
ATAS # : 28919.05
DATE SUBMITTED: 02-09-00
PROJECT : #27994-022-045 - PENTAIR
SAMPLE ID : GP-15-19'

PARAMETER	REPORTING LIMIT	UNITS	RESULTS	DATE ANALYZED	METHOD REFERENCE
			METALS		
ARSENIC	1.0	mg/Kg	5.5	02-14-00	SW 6010
BARIUM	0.40	mg/Kg	86.9	02-14-00	SW 6010
CADMIUM	0.20	mg/Kg	ND	02-14-00	SW 6010
IROMIUM	0.20	mg/Kg	16.3	02-14-00	SW 6010
EAD	1.0	mg/Kg	6.8	02-14-00	SW 6010
SILVER	0.40	mg/Kg	ND	02-14-00	SW 6010
SELENIUM	2.0	mg/Kg	ND	02-14-00	SW 6010
MERCURY	0.20	mg/Kg	ND	02-15-00	SW 7471

mg/Kg = PARTS PER MILLION(PPM)
ND = NOT DETECTED ABOVE REPORTING LIMIT

ATAS 875 Fee Fee Road • Maryland Heights, MO 63043 • (314) 434-4570 - FAX (314) 434-0080

IENT: DAMES & MOORE
721 EMERSON ROAD, SUITE 220
ST. LOUIS, MO 63141
ATTN: GEORGE JONES

REPORT: 2891901MT(720)

DATE : 02-17-00

SAMPLE MATRIX : SOIL
ATAS # : 28919.04
DATE SUBMITTED: 02-09-00
PROJECT : #27994-022-045 - PENTAIR
SAMPLE ID : GP-15-4'

PARAMETER	REPORTING LIMIT	UNITS	RESULTS	DATE ANALYZED	METHOD REFERENCE
			METALS		
ARSENIC	1.0	mg/Kg	8.23	02-17-00	SW 6010
BARIUM	0.40	mg/Kg	140	02-16-00	SW 6010
CADMIUM	0.20	mg/Kg	ND	02-16-00	SW 6010
CHROMIUM	0.20	mg/Kg	15.3	02-16-00	SW 6010
LEAD	1.0	mg/Kg	11.2	02-16-00	SW 6010
SILVER	0.40	mg/Kg	ND	02-16-00	SW 6010
SELENIUM	2.0	mg/Kg	ND	02-16-00	SW 6010
MERCURY	0.20	mg/Kg	ND	02-16-00	SW 7471

mg/Kg = PARTS PER MILLION(PPM)
ND = NOT DETECTED ABOVE REPORTING LIMIT

ATAS 875 Fee Fee Road • Maryland Heights, MO 63043 • (314) 434-4570 - FAX (314) 434-0080

CLIENT: DAMES & MOORE
721 EMERSON ROAD, SUITE 220
ST. LOUIS, MO 63141
ATTN: GEORGE JONES

REPORT: 2891901MT(720)

DATE : 02-17-00

SAMPLE MATRIX : SOIL
ATAS # : 28919.02
DATE SUBMITTED: 02-09-00
PROJECT : #27994-022-045 - PENTAIR
SAMPLE ID : GP-14-15'

PARAMETER	REPORTING LIMIT	UNITS	RESULTS	DATE ANALYZED	METHOD REFERENCE
			METALS		
ARSENIC	1.0	mg/Kg	5.8	02-11-00	SW 6010
BARIUM	0.40	mg/Kg	94.0	02-11-00	SW 6010
CADMIUM	0.20	mg/Kg	ND	02-11-00	SW 6010
CHROMIUM	0.20	mg/Kg	14.8	02-11-00	SW 6010
LEAD	1.0	mg/Kg	8.5	02-11-00	SW 6010
SILVER	0.40	mg/Kg	ND	02-11-00	SW 6010
SELENIUM	2.0	mg/Kg	ND	02-11-00	SW 6010
MERCURY	0.20	mg/Kg	ND	02-15-00	SW 7471

mg/Kg = PARTS PER MILLION(PPM)
ND = NOT DETECTED ABOVE REPORTING LIMIT

ATAS 875 Fee Fee Road • Maryland Heights, MO 63043 • (314) 434-4570 - FAX (314) 434-0080

CLIENT: DAMES & MOORE
721 EMERSON ROAD, SUITE 220
ST. LOUIS, MO 63141
ATTN: GEORGE JONES

REPORT: 2891901MT(720)
DATE : 02-17-00

SAMPLE MATRIX : SOIL
ATAS # : 28919.01
DATE SUBMITTED: 02-09-00
PROJECT : #27994-022-045 - PENTAIR
SAMPLE ID : GP-14-4'

PARAMETER	REPORTING LIMIT	UNITS	RESULTS	DATE ANALYZED	METHOD REFERENCE
			METALS		
ARSENIC	1.0	mg/Kg	3.1	02-11-00	SW 6010
BARIUM	0.40	mg/Kg	110	02-11-00	SW 6010
CADMIUM	0.20	mg/Kg	ND	02-11-00	SW 6010
CHROMIUM	0.20	mg/Kg	16.8	02-11-00	SW 6010
LEAD	1.0	mg/Kg	7.3	02-11-00	SW 6010
SILVER	0.40	mg/Kg	ND	02-11-00	SW 6010
SELENIUM	2.0	mg/Kg	ND	02-11-00	SW 6010
MERCURY	0.20	mg/Kg	ND	02-15-00	SW 7471

mg/Kg = PARTS PER MILLION(PPM)
ND = NOT DETECTED ABOVE REPORTING LIMIT

ATAS 875 Fee Fee Road • Maryland Heights, MO 63043 • (314) 434-4570 - FAX (314) 434-0080

CLIENT: DAMES & MOORE
721 EMERSON ROAD, SUITE 220
ST. LOUIS, MO 63141
ATTN: GEORGE JONES

REPORT: 2891301MT(720)

DATE : 02-16-00

SAMPLE MATRIX : SOIL
ATAS # : 28913.14
DATE SUBMITTED: 02-09-00
PROJECT : #27994-022-045 - PENTAIR
SAMPLE ID : GP-13-11'

PARAMETER	REPORTING LIMIT	UNITS	RESULTS	DATE ANALYZED	METHOD REFERENCE
			METALS		
ARSENIC	1.0	mg/Kg	2.3	02-11-00	SW 6010
BARIUM	0.40	mg/Kg	126	02-11-00	SW 6010
CADMIUM	0.20	mg/Kg	ND	02-11-00	SW 6010
CHROMIUM	0.20	mg/Kg	16.4	02-11-00	SW 6010
LEAD	1.0	mg/Kg	5.5	02-11-00	SW 6010
SILVER	0.40	mg/Kg	ND	02-11-00	SW 6010
SELENIUM	2.0	mg/Kg	ND	02-11-00	SW 6010
MERCURY	0.20	mg/Kg	ND	02-15-00	SW 7471

mg/Kg = PARTS PER MILLION(PPM)
ND = NOT DETECTED ABOVE REPORTING LIMIT

ATAS 875 Fee Fee Road • Maryland Heights, MO 63043 • (314) 434-4570 - FAX (314) 434-0080

REPORT: 2891301MT(720)

DATE : 02-16-00

IENT: DAMES & MOORE
721 EMERSON ROAD, SUITE 220
ST. LOUIS, MO 63141
ATTN: GEORGE JONES

SAMPLE MATRIX : SOIL
ATAS # : 28913.13
DATE SUBMITTED: 02-09-00
PROJECT : #27994-022-045 - PENTAIR
SAMPLE ID : GP-13-7'

PARAMETER	REPORTING LIMIT	UNITS	RESULTS	DATE ANALYZED	METHOD REFERENCE
			METALS		
ARSENIC	1.0	mg/Kg	5.9	02-11-00	SW 6010
BARIUM	0.40	mg/Kg	83.9	02-11-00	SW 6010
CADMIUM	0.20	mg/Kg	0.53	02-11-00	SW 6010
IROMIUM	0.20	mg/Kg	8.4	02-11-00	SW 6010
LEAD	1.0	mg/Kg	388	02-11-00	SW 6010
SILVER	0.40	mg/Kg	ND	02-11-00	SW 6010
SELENIUM	2.0	mg/Kg	ND	02-11-00	SW 6010
MERCURY	0.20	mg/Kg	ND	02-15-00	SW 7471

mg/Kg = PARTS PER MILLION(PPM)
) = NOT DETECTED ABOVE REPORTING LIMIT

ATAS 875 Fee Fee Road • Maryland Heights, MO 63043 • (314) 434-4570 - FAX (314) 434-0080

CLIENT: DAMES & MOORE
721 EMERSON ROAD, SUITE 220
ST. LOUIS, MO 63141
ATTN: GEORGE JONES

REPORT: 2891301MT(720)

DATE : 02-16-00

SAMPLE MATRIX : SOIL
ATAS # : 28913.12
DATE SUBMITTED: 02-09-00
PROJECT : #27994-022-045 - PENTAIR
SAMPLE ID : GP-12-14'

PARAMETER	REPORTING LIMIT	UNITS	RESULTS	DATE ANALYZED	METHOD REFERENCE
			METALS		
ARSENIC	1.0	mg/Kg	3.4	02-11-00	SW 6010
BARIUM	0.40	mg/Kg	74.6	02-11-00	SW 6010
CADMIUM	0.20	mg/Kg	ND	02-11-00	SW 6010
CHROMIUM	0.20	mg/Kg	16.1	02-11-00	SW 6010
LEAD	1.0	mg/Kg	7.5	02-11-00	SW 6010
SILVER	0.40	mg/Kg	ND	02-11-00	SW 6010
SELENIUM	2.0	mg/Kg	ND	02-11-00	SW 6010
MERCURY	0.20	mg/Kg	ND	02-15-00	SW 7471

mg/Kg = PARTS PER MILLION(PPM)
ND = NOT DETECTED ABOVE REPORTING LIMIT

ATAS 875 Fee Fee Road • Maryland Heights, MO 63043 • (314) 434-4570 - FAX (314) 434-0080

CLIENT: DAMES & MOORE
721 EMERSON ROAD, SUITE 220
ST. LOUIS, MO 63141
ATTN: GEORGE JONES

REPORT: 2891301MT(720)
DATE : 02-16-00

SAMPLE MATRIX : SOIL
ATAS # : 28913.11
DATE SUBMITTED: 02-09-00
PROJECT : #27994-022-045 - PENTAIR
SAMPLE ID : GP-12-4'

PARAMETER	REPORTING LIMIT	UNITS	RESULTS	DATE ANALYZED	METHOD REFERENCE
			METALS		
ARSENIC	1.0	mg/Kg	4.5	02-11-00	SW 6010
BARIUM	0.40	mg/Kg	128	02-11-00	SW 6010
CADMIUM	0.20	mg/Kg	ND	02-11-00	SW 6010
CHROMIUM	0.20	mg/Kg	14.3	02-11-00	SW 6010
LEAD	1.0	mg/Kg	7.6	02-11-00	SW 6010
SILVER	0.40	mg/Kg	ND	02-11-00	SW 6010
SELENIUM	2.0	mg/Kg	ND	02-11-00	SW 6010
MERCURY	0.20	mg/Kg	ND	02-15-00	SW 7471

mg/Kg = PARTS PER MILLION(PPM)
ND = NOT DETECTED ABOVE REPORTING LIMIT

ATAS 875 Fee Fee Road • Maryland Heights, MO 63043 • (314) 434-4570 - FAX (314) 434-0080

CLIENT: DAMES & MOORE
721 EMERSON ROAD, SUITE 220
ST. LOUIS, MO 63141
ATTN: GEORGE JONES

REPORT: 2891301MT(720)

DATE : 02-16-00

SAMPLE MATRIX : SOIL
ATAS # : 28913.10
DATE SUBMITTED: 02-09-00
PROJECT : #27994-022-045 - PENTAIR
SAMPLE ID : GP-11-14'

PARAMETER	REPORTING LIMIT	UNITS	RESULTS	DATE ANALYZED	METHOD REFERENCE
			METALS		
ARSENIC	1.0	mg/Kg	3.7	02-11-00	SW 6010
BARIUM	0.40	mg/Kg	77.0	02-11-00	SW 6010
CADMIUM	0.20	mg/Kg	0.27	02-11-00	SW 6010
CHROMIUM	0.20	mg/Kg	11.0	02-11-00	SW 6010
LEAD	1.0	mg/Kg	8.6	02-11-00	SW 6010
SILVER	0.40	mg/Kg	ND	02-11-00	SW 6010
SELENIUM	2.0	mg/Kg	ND	02-11-00	SW 6010
MERCURY	0.20	mg/Kg	ND	02-15-00	SW 7471

mg/Kg = PARTS PER MILLION(PPM)
ND = NOT DETECTED ABOVE REPORTING LIMIT

ATAS 875 Fee Fee Road • Maryland Heights, MO 63043 • (314) 434-4570 - FAX (314) 434-0080

CLIENT: DAMES & MOORE
721 EMERSON ROAD, SUITE 220
ST. LOUIS, MO 63141
ATTN: GEORGE JONES

REPORT: 2891301MT(720)
DATE : 02-16-00

SAMPLE MATRIX : SOIL
ATAS # : 28913.09
DATE SUBMITTED: 02-09-00
PROJECT : #27994-022-045 - PENTAIR
SAMPLE ID : GP-11-4'

PARAMETER	REPORTING LIMIT	UNITS	RESULTS	DATE ANALYZED	METHOD REFERENCE
			METALS		
ARSENIC	1.0	mg/Kg	4.3	02-11-00	SW 6010
BARIUM	0.40	mg/Kg	168	02-11-00	SW 6010
CADMIUM	0.20	mg/Kg	ND	02-11-00	SW 6010
CHROMIUM	0.20	mg/Kg	11.1	02-11-00	SW 6010
LEAD	1.0	mg/Kg	7.6	02-11-00	SW 6010
SILVER	0.40	mg/Kg	ND	02-11-00	SW 6010
SELENIUM	2.0	mg/Kg	ND	02-11-00	SW 6010
MERCURY	0.20	mg/Kg	ND	02-15-00	SW 7471

mg/Kg = PARTS PER MILLION(PPM)
ND = NOT DETECTED ABOVE REPORTING LIMIT

ATAS 875 Fee Fee Road • Maryland Heights, MO 63043 • (314) 434-4570 - FAX (314) 434-0080

LIENT: DAMES & MOORE
721 EMERSON ROAD, SUITE 220
ST. LOUIS, MO 63141
ATTN: GEORGE JONES

REPORT: 2891301MT(720)

DATE : 02-16-00

SAMPLE MATRIX : SOIL
ATAS # : 28913.08
DATE SUBMITTED: 02-09-00
PROJECT : #27994-022-045 - PENTAIR
SAMPLE ID : GP-10-10'

PARAMETER	REPORTING LIMIT	UNITS	RESULTS	DATE ANALYZED	METHOD REFERENCE
			METALS		
ARSENIC	1.0	mg/Kg	2.9	02-11-00	SW 6010
BARIUM	0.40	mg/Kg	76.1	02-11-00	SW 6010
CADMIUM	0.20	mg/Kg	ND	02-11-00	SW 6010
CHROMIUM	0.20	mg/Kg	14.8	02-11-00	SW 6010
LEAD	1.0	mg/Kg	10.1	02-11-00	SW 6010
SILVER	0.40	mg/Kg	ND	02-11-00	SW 6010
SELENIUM	2.0	mg/Kg	ND	02-11-00	SW 6010
MERCURY	0.20	mg/Kg	ND	02-15-00	SW 7471

mg/Kg = PARTS PER MILLION(PPM)
ND = NOT DETECTED ABOVE REPORTING LIMIT

ATAS 875 Fee Fee Road • Maryland Heights, MO 63043 • (314) 434-4570 - FAX (314) 434-0080

REPORT: 2891301MT(720)

DATE : 02-16-00

CLIENT: DAMES & MOORE
721 EMERSON ROAD, SUITE 220
ST. LOUIS, MO 63141
ATTN: GEORGE JONES

SAMPLE MATRIX : SOIL
ATAS # : 28913.07
DATE SUBMITTED: 02-09-00
PROJECT : #27994-022-045 - PENTAIR
SAMPLE ID : GP-10-4'

PARAMETER	REPORTING LIMIT	UNITS	RESULTS	DATE ANALYZED	METHOD REFERENCE
			METALS		
ARSENIC	1.0	mg/Kg	6.6	02-11-00	SW 6010
BARIUM	0.40	mg/Kg	107	02-11-00	SW 6010
CADMIUM	0.20	mg/Kg	0.22	02-11-00	SW 6010
CHROMIUM	0.20	mg/Kg	15.0	02-11-00	SW 6010
LEAD	10.0	mg/Kg	39.4	02-11-00	SW 6010
SILVER	0.40	mg/Kg	ND	02-11-00	SW 6010
SELENIUM	20.0	mg/Kg	ND	02-11-00	SW 6010
MERCURY	0.20	mg/Kg	ND	02-15-00	SW 7471

mg/Kg = PARTS PER MILLION(PPM)
ND = NOT DETECTED ABOVE REPORTING LIMIT

ATAS 875 Fee Fee Road • Maryland Heights, MO 63043 • (314) 434-4570 - FAX (314) 434-0080

REPORT: 2891301MT(720)

DATE : 02-16-00

CLIENT: DAMES & MOORE
721 EMERSON ROAD, SUITE 220
ST. LOUIS, MO 63141
ATTN: GEORGE JONES

SAMPLE MATRIX : SOIL
ATAS # : 28913.06
DATE SUBMITTED: 02-09-00
PROJECT : #27994-022-045 - PENTAIR
SAMPLE ID : GP-9-7'

PARAMETER	REPORTING LIMIT	UNITS	RESULTS	DATE ANALYZED	METHOD REFERENCE
			METALS		
ARSENIC	1.0	mg/Kg	2.3	02-11-00	SW 6010
BARIUM	0.40	mg/Kg	87.1	02-11-00	SW 6010
CADMIUM	0.20	mg/Kg	ND	02-11-00	SW 6010
CHROMIUM	0.20	mg/Kg	16.2	02-11-00	SW 6010
LEAD	1.0	mg/Kg	6.8	02-11-00	SW 6010
SILVER	0.40	mg/Kg	ND	02-11-00	SW 6010
SELENIUM	2.0	mg/Kg	ND	02-11-00	SW 6010
MERCURY	0.20	mg/Kg	ND	02-15-00	SW 7471

mg/Kg = PARTS PER MILLION(PPM)
= NOT DETECTED ABOVE REPORTING LIMIT

ATAS 875 Fee Fee Road • Maryland Heights, MO 63043 • (314) 434-4570 - FAX (314) 434-0080

CLIENT: DAMES & MOORE
721 EMERSON ROAD, SUITE 220
ST. LOUIS, MO 63141
ATTN: GEORGE JONES

REPORT: 2891301MT(720)
DATE : 02-16-00

SAMPLE MATRIX : SOIL
ATAS # : 28913.05
DATE SUBMITTED: 02-09-00
PROJECT : #27994-022-045 - PENTAIR
SAMPLE ID : GP-9-4'

PARAMETER	REPORTING LIMIT	UNITS	RESULTS	DATE ANALYZED	METHOD REFERENCE
			METALS		
ARSENIC	1.0	mg/Kg	5.6	02-11-00	SW 6010
BARIUM	0.40	mg/Kg	122	02-11-00	SW 6010
CADMIUM	0.20	mg/Kg	ND	02-11-00	SW 6010
CHROMIUM	0.20	mg/Kg	13.3	02-11-00	SW 6010
LEAD	1.0	mg/Kg	12.3	02-11-00	SW 6010
SILVER	0.40	mg/Kg	ND	02-11-00	SW 6010
SELENIUM	2.0	mg/Kg	ND	02-11-00	SW 6010
MERCURY	0.20	mg/Kg	ND	02-15-00	SW 7471

mg/Kg = PARTS PER MILLION (PPM)
D = NOT DETECTED ABOVE REPORTING LIMIT

ATAS 875 Fee Fee Road • Maryland Heights, MO 63043 • (314) 434-4570 · FAX (314) 434-0080

.ENT: DAMES & MOORE
721 EMERSON ROAD, SUITE 220
ST. LOUIS, MO 63141
ATTN: GEORGE JONES

REPORT: 2891301MT(720)

DATE : 02-16-00

SAMPLE MATRIX : SOIL
ATAS # : 28913.04
DATE SUBMITTED: 02-09-00
PROJECT : #27994-022-045 - PENTAIR
SAMPLE ID : GP-8-10'

PARAMETER	REPORTING LIMIT	UNITS	RESULTS	DATE ANALYZED	METHOD REFERENCE
			METALS		
ARSENIC	1.0	mg/Kg	6.1	02-11-00	SW 6010
BARIUM	0.40	mg/Kg	127	02-11-00	SW 6010
CADMIUM	0.20	mg/Kg	ND	02-11-00	SW 6010
CHROMIUM	2.0	mg/Kg	20.1	02-11-00	SW 6010
LEAD	10.0	mg/Kg	18.8	02-11-00	SW 6010
SILVER	0.40	mg/Kg	ND	02-11-00	SW 6010
SELENIUM	20.0	mg/Kg	ND	02-11-00	SW 6010
MERCURY	0.20	mg/Kg	ND	02-15-00	SW 7471

mg/Kg = PARTS PER MILLION(PPM)
= NOT DETECTED ABOVE REPORTING LIMIT

ATAS 875 Fee Fee Road • Maryland Heights, MO 63043 • (314) 434-4570 - FAX (314) 434-0080

CLIENT: DAMES & MOORE
721 EMERSON ROAD, SUITE 220
ST. LOUIS, MO 63141
ATTN: GEORGE JONES

REPORT: 2891301MT(720).

DATE : 02-16-00

SAMPLE MATRIX : SOIL
ATAS # : 28913.03
DATE SUBMITTED: 02-09-00
PROJECT : #27994-022-045 - PENTAIR
SAMPLE ID : GP-8-6'

PARAMETER	REPORTING LIMIT	UNITS	RESULTS	DATE ANALYZED	METHOD REFERENCE
			METALS		
ARSENIC	1.0	mg/Kg	9.2	02-11-00	SW 6010
BARIUM	0.40	mg/Kg	105	02-11-00	SW 6010
CADMIUM	0.20	mg/Kg	ND	02-11-00	SW 6010
CHROMIUM	0.20	mg/Kg	13.9	02-11-00	SW 6010
LEAD	1.0	mg/Kg	10.4	02-11-00	SW 6010
SILVER	0.40	mg/Kg	ND	02-11-00	SW 6010
SELENIUM	2.0	mg/Kg	ND	02-11-00	SW 6010
MERCURY	0.20	mg/Kg	ND	02-15-00	SW 7471

mg/Kg = PARTS PER MILLION(PPM)
ND = NOT DETECTED ABOVE REPORTING LIMIT

ATAS 875 Fee Fee Road • Maryland Heights, MO 63043 • (314) 434-4570 - FAX (314) 434-0080

CLIENT: DAMES & MOORE
721 EMERSON ROAD, SUITE 220
ST. LOUIS, MO 63141
ATTN: GEORGE JONES

REPORT: 2891301MT(720)

DATE : 02-16-00

SAMPLE MATRIX : SOIL
ATAS # : 28913.02
DATE SUBMITTED: 02-09-00
PROJECT : #27994-022-045 - PENTAIR
SAMPLE ID : GP-7-8'

PARAMETER	REPORTING LIMIT	UNITS	RESULTS	DATE ANALYZED	METHOD REFERENCE
			METALS		
ARSENIC	1.0	mg/Kg	3.6	02-11-00	SW 6010
BARIUM	0.40	mg/Kg	72.6	02-11-00	SW 6010
CADMIUM	0.20	mg/Kg	ND	02-11-00	SW 6010
CHROMIUM	0.20	mg/Kg	16.1	02-11-00	SW 6010
LEAD	1.0	mg/Kg	16.3	02-11-00	SW 6010
SILVER	0.40	mg/Kg	ND	02-11-00	SW 6010
SELENIUM	2.0	mg/Kg	ND	02-11-00	SW 6010
MERCURY	0.20	mg/Kg	ND	02-15-00	SW 7471

mg/Kg = PARTS PER MILLION (PPM)
ND = NOT DETECTED ABOVE REPORTING LIMIT

ATAS 875 Fee Fee Road • Maryland Heights, MO 63043 • (314) 434-4570 - FAX (314) 434-0080

CLIENT: DAMES & MOORE
721 EMERSON ROAD, SUITE 220
ST. LOUIS, MO 63141
ATTN: GEORGE JONES

REPORT: 2891301MT(720)
DATE : 02-16-00

SAMPLE MATRIX : SOIL
ATAS # : 28913.01
DATE SUBMITTED: 02-09-00
PROJECT : #27994-022-045 - PENTAIR
SAMPLE ID : GP-7-4'

PARAMETER	REPORTING LIMIT	UNITS	RESULTS	DATE ANALYZED	METHOD REFERENCE
			METALS		
ARSENIC	1.0	mg/Kg	4.0	02-11-00	SW 6010
BARIUM	0.40	mg/Kg	174	02-11-00	SW 6010
CADMIUM	0.20	mg/Kg	0.33	02-11-00	SW 6010
CHROMIUM	0.20	mg/Kg	12.9	02-11-00	SW 6010
LEAD	1.0	mg/Kg	304	02-11-00	SW 6010
SILVER	0.40	mg/Kg	ND	02-11-00	SW 6010
SELENIUM	2.0	mg/Kg	ND	02-11-00	SW 6010
MERCURY	0.20	mg/Kg	0.39	02-15-00	SW 7471

mg/Kg = PARTS PER MILLION(PPM)
ND = NOT DETECTED ABOVE REPORTING LIMIT

ATAS 875 Fee Fee Road • Maryland Heights, MO 63043 • (314) 434-4570 - FAX (314) 434-0080

CLIENT: DAMES & MOORE
721 EMERSON ROAD, SUITE 220
ST. LOUIS, MO 63141
ATTN: GEORGE JONES

REPORT: 2889901MT(720)

DATE : 02-15-00

SAMPLE MATRIX : SOIL
ATAS # : 28899.15
DATE SUBMITTED: 02-08-00
PROJECT : PENTAIR
SAMPLE ID : GP-6-14'

PARAMETER	REPORTING LIMIT	UNITS	RESULTS	DATE ANALYZED	METHOD REFERENCE
			METALS		
ARSENIC	1.0	mg/Kg	14.9	02-14-00	SW 6010
BARIUM	0.40	mg/Kg	172	02-14-00	SW 6010
CADMIUM	2.0	mg/Kg	ND	02-14-00	SW 6010
CHROMIUM	2.0	mg/Kg	22.0	02-14-00	SW 6010
LEAD	10.0	mg/Kg	13.1	02-14-00	SW 6010
SILVER	0.40	mg/Kg	ND	02-14-00	SW 6010
SELENIUM	2.0	mg/Kg	ND	02-14-00	SW 6010
MERCURY	0.20	mg/Kg	ND	02-10-00	SW 7471

mg/Kg = PARTS PER MILLION(PPM)
ND = NOT DETECTED ABOVE REPORTING LIMIT

ATAS 875 Fee Fee Road • Maryland Heights, MO 63043 • (314) 434-4570 - FAX (314) 434-0080

REPORT: 2889901MT(720)

DATE : 02-15-00

CLIENT: DAMES & MOORE
721 EMERSON ROAD, SUITE 220
ST. LOUIS, MO 63141
ATTN: GEORGE JONES

SAMPLE MATRIX : SOIL
ATAS # : 28899.14
DATE SUBMITTED: 02-08-00
PROJECT : PENTAIR
SAMPLE ID : GP-6-6'

PARAMETER	REPORTING LIMIT	UNITS	RESULTS	DATE ANALYZED	METHOD REFERENCE
			METALS		
ARSENIC	1.0	mg/Kg	6.7	02-14-00	SW 6010
BARIUM	0.40	mg/Kg	85.6	02-14-00	SW 6010
CADMIUM	0.20	mg/Kg	ND	02-14-00	SW 6010
CHROMIUM	0.20	mg/Kg	13.2	02-14-00	SW 6010
LEAD	1.0	mg/Kg	11.5	02-14-00	SW 6010
SILVER	0.40	mg/Kg	ND	02-14-00	SW 6010
SELENIUM	2.0	mg/Kg	ND	02-14-00	SW 6010
MERCURY	0.20	mg/Kg	ND	02-10-00	SW 7471

mg/Kg = PARTS PER MILLION(PPM)
ND = NOT DETECTED ABOVE REPORTING LIMIT

ATAS 875 Fee Fee Road • Maryland Heights, MO 63043 • (314) 434-4570 - FAX (314) 434-0080

CLIENT: DAMES & MOORE
721 EMERSON ROAD, SUITE 220
ST. LOUIS, MO 63141
ATTN: GEORGE JONES

REPORT: 2889901MT(720)

DATE : 02-15-00

SAMPLE MATRIX : SOIL
ATAS # : 28899.13
DATE SUBMITTED: 02-08-00
PROJECT : PENTAIR
SAMPLE ID : GP-5-11'

PARAMETER	REPORTING LIMIT	UNITS	RESULTS	DATE ANALYZED	METHOD REFERENCE
			METALS		
ARSENIC	1.0	mg/Kg	2.1	02-14-00	SW 6010
BARIUM	0.40	mg/Kg	67.5	02-14-00	SW 6010
CADMIUM	0.20	mg/Kg	ND	02-14-00	SW 6010
CHROMIUM	0.20	mg/Kg	16.1	02-14-00	SW 6010
LEAD	1.0	mg/Kg	6.3	02-14-00	SW 6010
SILVER	0.40	mg/Kg	ND	02-14-00	SW 6010
SELENIUM	20.0	mg/Kg	ND	02-14-00	SW 6010
MERCURY	0.20	mg/Kg	ND	02-10-00	SW 7471

mg/Kg = PARTS PER MILLION(PPM)
ND = NOT DETECTED ABOVE REPORTING LIMIT

ATAS 875 Fee Fee Road • Maryland Heights, MO 63043 • (314) 434-4570 - FAX (314) 434-0080

CLIENT: DAMES & MOORE
721 EMERSON ROAD, SUITE 220
ST. LOUIS, MO 63141
ATTN: GEORGE JONES

REPORT: 2889901MT(720)

DATE : 02-15-00

SAMPLE MATRIX : SOIL
ATAS # : 28899.12
DATE SUBMITTED: 02-08-00
PROJECT : PENTAIR
SAMPLE ID : GP-5-3'

PARAMETER	REPORTING LIMIT	UNITS	RESULTS	DATE ANALYZED	METHOD REFERENCE
			METALS		
ARSENIC	1.0	mg/Kg	7.8	02-14-00	SW 6010
BARIUM	0.40	mg/Kg	171	02-14-00	SW 6010
CADMIUM	0.20	mg/Kg	ND	02-14-00	SW 6010
CHROMIUM	0.20	mg/Kg	17.9	02-14-00	SW 6010
LEAD	10.0	mg/Kg	7.8	02-14-00	SW 6010
SILVER	0.40	mg/Kg	ND	02-14-00	SW 6010
SELENIUM	20.0	mg/Kg	ND	02-14-00	SW 6010
MERCURY	0.20	mg/Kg	ND	02-10-00	SW 7471

mg/Kg = PARTS PER MILLION(PPM)
ND = NOT DETECTED ABOVE REPORTING LIMIT

ATAS 875 Fee Fee Road • Maryland Heights, MO 63043 • (314) 434-4570 - FAX (314) 434-0080

CLIENT: DAMES & MOORE
721 EMERSON ROAD, SUITE 220
ST. LOUIS, MO 63141
ATTN: GEORGE JONES

REPORT: 2889901MT(720)

DATE : 02-15-00

SAMPLE MATRIX : SOIL
ATAS # : 28899.11
DATE SUBMITTED: 02-08-00
PROJECT : PENTAIR
SAMPLE ID : GP-4-10'

PARAMETER	REPORTING LIMIT	UNITS	RESULTS	DATE ANALYZED	METHOD REFERENCE
			METALS		
ARSENIC	1.0	mg/Kg	6.0	02-14-00	SW 6010
BARIUM	0.40	mg/Kg	129	02-14-00	SW 6010
CADMIUM	0.20	mg/Kg	ND	02-14-00	SW 6010
CHROMIUM	0.20	mg/Kg	18.5	02-14-00	SW 6010
LEAD	1.0	mg/Kg	8.1	02-14-00	SW 6010
SILVER	0.40	mg/Kg	ND	02-14-00	SW 6010
SELENIUM	20.0	mg/Kg	ND	02-14-00	SW 6010
MERCURY	0.20	mg/Kg	ND	02-10-00	SW 7471

mg/Kg = PARTS PER MILLION (PPM)
D = NOT DETECTED ABOVE REPORTING LIMIT

ATAS 875 Fee Fee Road • Maryland Heights, MO 63043 • (314) 434-4570 - FAX (314) 434-0080

CLIENT: DAMES & MOORE
721 EMERSON ROAD, SUITE 220
ST. LOUIS, MO 63141
ATTN: GEORGE JONES

REPORT: 2889901MT(720)

DATE : 02-15-00

SAMPLE MATRIX : SOIL
ATAS # : 28899.10
DATE SUBMITTED: 02-08-00
PROJECT : PENTAIR
SAMPLE ID : GP-4-3'

PARAMETER	REPORTING LIMIT	UNITS	RESULTS	DATE ANALYZED	METHOD REFERENCE
			METALS		
ARSENIC	1.0	mg/Kg	3.0	02-14-00	SW 6010
BARIUM	0.40	mg/Kg	102	02-14-00	SW 6010
CADMIUM	0.20	mg/Kg	ND	02-14-00	SW 6010
CHROMIUM	0.20	mg/Kg	6.3	02-14-00	SW 6010
LEAD	1.0	mg/Kg	21.8	02-14-00	SW 6010
SILVER	0.40	mg/Kg	ND	02-14-00	SW 6010
SELENIUM	2.0	mg/Kg	ND	02-14-00	SW 6010
MERCURY	0.20	mg/Kg	ND	02-10-00	SW 7471

mg/Kg = PARTS PER MILLION(PPM)
ND = NOT DETECTED ABOVE REPORTING LIMIT

ATAS 875 Fee Fee Road • Maryland Heights, MO 63043 • (314) 434-4570 - FAX (314) 434-0080

CLIENT: DAMES & MOORE
721 EMERSON ROAD, SUITE 220
ST. LOUIS, MO 63141
ATTN: GEORGE JONES

REPORT: 2889901MT(720)

DATE : 02-15-00

SAMPLE MATRIX : SOIL
ATAS # : 28899.09
DATE SUBMITTED: 02-08-00
PROJECT : PENTAIR
SAMPLE ID : GP-3-7'

PARAMETER	REPORTING LIMIT	UNITS	RESULTS	DATE ANALYZED	METHOD REFERENCE
			METALS		
ARSENIC	1.0	mg/Kg	19.7	02-14-00	SW 6010
BARIUM	0.40	mg/Kg	111	02-14-00	SW 6010
CADMIUM	0.20	mg/Kg	ND	02-14-00	SW 6010
CHROMIUM	0.20	mg/Kg	12.9	02-14-00	SW 6010
LEAD	1.0	mg/Kg	10.8	02-14-00	SW 6010
SILVER	0.40	mg/Kg	ND	02-14-00	SW 6010
SELENIUM	20.0	mg/Kg	ND	02-14-00	SW 6010
MERCURY	0.20	mg/Kg	ND	02-10-00	SW 7471

mg/Kg = PARTS PER MILLION(PPM)
ND = NOT DETECTED ABOVE REPORTING LIMIT

ATAS 875 Fee Fee Road • Maryland Heights, MO 63043 • (314) 434-4570 - FAX (314) 434-0080

CLIENT: DAMES & MOORE
721 EMERSON ROAD, SUITE 220
ST. LOUIS, MO 63141
ATTN: GEORGE JONES

REPORT: 2889901MT(720)

DATE : 02-15-00

SAMPLE MATRIX : SOIL
ATAS # : 28899.08
DATE SUBMITTED: 02-08-00
PROJECT : PENTAIR
SAMPLE ID : GP-3-3'

PARAMETER	REPORTING LIMIT	UNITS	RESULTS	DATE ANALYZED	METHOD REFERENCE
			METALS		
ARSENIC	1.0	mg/Kg	3.7	02-14-00	SW 6010
BARIUM	0.40	mg/Kg	29.6	02-14-00	SW 6010
CADMIUM	0.20	mg/Kg	7.4	02-14-00	SW 6010
CHROMIUM	0.20	mg/Kg	8.6	02-14-00	SW 6010
LEAD	1.0	mg/Kg	12.2	02-14-00	SW 6010
SILVER	0.40	mg/Kg	ND	02-14-00	SW 6010
SELENIUM	2.0	mg/Kg	ND	02-14-00	SW 6010
MERCURY	0.20	mg/Kg	ND	02-10-00	SW 7471

mg/Kg = PARTS PER MILLION(PPM)
ND = NOT DETECTED ABOVE REPORTING LIMIT

ATAS 875 Fee Fee Road • Maryland Heights, MO 63043 • (314) 434-4570 - FAX (314) 434-0080

CLIENT: DAMES & MOORE
721 EMERSON ROAD, SUITE 220
ST. LOUIS, MO 63141
ATTN: GEORGE JONES

REPORT: 2889901MT(720)
DATE : 02-15-00

SAMPLE MATRIX : SOIL
ATAS # : 28899.04
DATE SUBMITTED: 02-08-00
PROJECT : PENTAIR
SAMPLE ID : GP-2-13'

PARAMETER	REPORTING LIMIT	UNITS	RESULTS	DATE ANALYZED	METHOD REFERENCE
			METALS		
ARSENIC	1.0	mg/Kg	2.5	02-14-00	SW 6010
BARIUM	0.40	mg/Kg	74.0	02-14-00	SW 6010
CADMIUM	0.20	mg/Kg	ND	02-14-00	SW 6010
CHROMIUM	0.20	mg/Kg	19.8	02-14-00	SW 6010
LEAD	1.0	mg/Kg	7.5	02-14-00	SW 6010
SILVER	0.40	mg/Kg	ND	02-14-00	SW 6010
SELENIUM	20.0	mg/Kg	ND	02-14-00	SW 6010
MERCURY	0.20	mg/Kg	ND	02-10-00	SW 7471

mg/Kg = PARTS PER MILLION(PPM)
ND = NOT DETECTED ABOVE REPORTING LIMIT

ATAS 875 Fee Fee Road • Maryland Heights, MO 63043 • (314) 434-4570 - FAX (314) 434-0080

CLIENT: DAMES & MOORE
721 EMERSON ROAD, SUITE 220
ST. LOUIS, MO 63141
ATTN: GEORGE JONES

REPORT: 2889901MT(720)

DATE : 02-15-00

SAMPLE MATRIX : SOIL
ATAS # : 28899.03
DATE SUBMITTED: 02-08-00
PROJECT : PENTAIR
SAMPLE ID : GP-2-10'

PARAMETER	REPORTING LIMIT	UNITS	RESULTS	DATE ANALYZED	METHOD REFERENCE
			METALS		
ARSENIC	1.0	mg/Kg	5.7	02-14-00	SW 6010
BARIUM	0.40	mg/Kg	117	02-14-00	SW 6010
CADMIUM	0.20	mg/Kg	ND	02-14-00	SW 6010
CHROMIUM	0.20	mg/Kg	18.4	02-14-00	SW 6010
LEAD	1.0	mg/Kg	12.3	02-14-00	SW 6010
SILVER	0.40	mg/Kg	ND	02-14-00	SW 6010
SELENIUM	20.0	mg/Kg	ND	02-14-00	SW 6010
MERCURY	0.20	mg/Kg	ND	02-10-00	SW 7471

mg/Kg = PARTS PER MILLION (PPM)
ND = NOT DETECTED ABOVE REPORTING LIMIT

ATAS 875 Fee Fee Road • Maryland Heights, MO 63043 • (314) 434-4570 - FAX (314) 434-0080

REPORT: 2889901MT(720)

DATE : 02-15-00

CLIENT: DAMES & MOORE
721 EMERSON ROAD, SUITE 220
ST. LOUIS, MO 63141
ATTN: GEORGE JONES

SAMPLE MATRIX : SOIL
ATAS # : 28899.02
DATE SUBMITTED: 02-08-00
PROJECT : PENTAIR
SAMPLE ID : GP-1-10'

PARAMETER	REPORTING LIMIT	UNITS	RESULTS	DATE ANALYZED	METHOD REFERENCE
			METALS		
ARSENIC	1.0	mg/Kg	5.7	02-14-00	SW 6010
BARIUM	0.40	mg/Kg	126	02-14-00	SW 6010
CADMIUM	0.20	mg/Kg	ND	02-14-00	SW 6010
CHROMIUM	0.20	mg/Kg	13.6	02-14-00	SW 6010
LEAD	1.0	mg/Kg	9.8	02-14-00	SW 6010
SILVER	0.40	mg/Kg	ND	02-14-00	SW 6010
SELENIUM	20.0	mg/Kg	ND	02-14-00	SW 6010
MERCURY	0.20	mg/Kg	ND	02-10-00	SW 7471

mg/Kg = PARTS PER MILLION(PPM)
ND = NOT DETECTED ABOVE REPORTING LIMIT

ATAS 875 Fee Fee Road • Maryland Heights, MO 63043 • (314) 434-4570 - FAX (314) 434-0080

REPORT: 2889901MT(720)

DATE : 02-15-00

CLIENT: DAMES & MOORE
721 EMERSON ROAD, SUITE 220
ST. LOUIS, MO 63141
ATTN: GEORGE JONES

SAMPLE MATRIX : SOIL
ATAS # : 28899.01
DATE SUBMITTED: 02-08-00
PROJECT : PENTAIR
SAMPLE ID : GP-1-7'

PARAMETER	REPORTING LIMIT	UNITS	RESULTS	DATE ANALYZED	METHOD REFERENCE
			METALS		
ARSENIC	1.0	mg/Kg	11.8	02-14-00	SW 6010
BARIUM	0.40	mg/Kg	184	02-14-00	SW 6010
CADMIUM	0.20	mg/Kg	ND	02-14-00	SW 6010
CHROMIUM	0.20	mg/Kg	12.9	02-14-00	SW 6010
LEAD	10.0	mg/Kg	16.9	02-14-00	SW 6010
SILVER	0.40	mg/Kg	ND	02-14-00	SW 6010
SELENIUM	20.0	mg/Kg	ND	02-14-00	SW 6010
MERCURY	0.20	mg/Kg	ND	02-10-00	SW 7471

mg/Kg = PARTS PER MILLION(PPM)
ND = NOT DETECTED ABOVE REPORTING LIMIT

ATAS 875 Fee Fee Road • Maryland Heights, MO 63043 • (314) 434-4570 - FAX (314) 434-0080

REPORT: 2891201MT(720)

DATE : 02-16-00

CLIENT: DAMES & MOORE
721 EMERSON ROAD, SUITE 220
ST. LOUIS, MO 63141
ATTN: GEORGE JONES

SAMPLE MATRIX : SOIL
ATAS # : 28912.02
DATE SUBMITTED: 02-09-00
PROJECT : #27994-022-045 - PENTAIR
SAMPLE ID : MW-12-27'

PARAMETER	REPORTING LIMIT	UNITS	RESULTS	DATE ANALYZED	METHOD REFERENCE
			METALS		
ARSENIC	1.00	mg/Kg	2.6	02-11-00	SW 6010
BARIUM	0.40	mg/Kg	55.8	02-11-00	SW 6010
CADMIUM	0.20	mg/Kg	ND	02-11-00	SW 6010
CHROMIUM	0.20	mg/Kg	20.3	02-11-00	SW 6010
LEAD	10.0	mg/Kg	ND	02-11-00	SW 6010
SILVER	0.40	mg/Kg	ND	02-11-00	SW 6010
SELENIUM	20.0	mg/Kg	ND	02-11-00	SW 6010
MERCURY	0.20	mg/Kg	ND	02-15-00	SW 7471

mg/Kg = PARTS PER MILLION(PPM)
ND = NOT DETECTED ABOVE REPORTING LIMIT

ATAS 875 Fee Fee Road • Maryland Heights, MO 63043 • (314) 434-4570 - FAX (314) 434-0080

REPORT: 2891201MT(720)

DATE : 02-16-00

CLIENT: DAMES & MOORE
721 EMERSON ROAD, SUITE 220
ST. LOUIS, MO 63141
ATTN: GEORGE JONES

SAMPLE MATRIX : SOIL
ATAS # : 28912.01
DATE SUBMITTED: 02-09-00
PROJECT : #27994-022-045 - PENTAIR
SAMPLE ID : MW-12-10'

PARAMETER	REPORTING LIMIT	UNITS	RESULTS	DATE ANALYZED	METHOD REFERENCE
			METALS		
ARSENIC	1.00	mg/Kg	3.8	02-11-00	SW 6010
BARIUM	0.40	mg/Kg	88.7	02-11-00	SW 6010
CADMIUM	0.20	mg/Kg	0.22	02-11-00	SW 6010
CHROMIUM	0.20	mg/Kg	18.8	02-11-00	SW 6010
LEAD	5.00	mg/Kg	9.9	02-11-00	SW 6010
SILVER	0.40	mg/Kg	ND	02-11-00	SW 6010
SELENIUM	10.0	mg/Kg	ND	02-11-00	SW 6010
MERCURY	0.20	mg/Kg	ND	02-15-00	SW 7471

mg/Kg = PARTS PER MILLION(PPM)
ND = NOT DETECTED ABOVE REPORTING LIMIT

ATAS 875 Fee Fee Road • Maryland Heights, MO 63043 • (314) 434-4570 - FAX (314) 434-0080

CLIENT: DAMES & MOORE
721 EMERSON ROAD, SUITE 220
ST. LOUIS, MO 63141
ATTN: DAVID HEINZE

REPORT: 2836601MT(717)

DATE : 12-08-99

SAMPLE MATRIX : SOIL
ATAS # : 28366.01
DATE SUBMITTED: 11-29-99
PROJECT : PENTAIR
SAMPLE ID : MW-7(5')

PARAMETER	REPORTING LIMIT	UNITS	RESULTS	DATE ANALYZED	METHOD REFERENCE
			METALS		
ARSENIC	1.0	mg/Kg	4.56	12-03-99	SW 6010
BARIUM	0.4	mg/Kg	100	12-03-99	SW 6010
CADMIUM	0.2	mg/Kg	ND	12-03-99	SW 6010
CHROMIUM	0.2	mg/Kg	14.5	12-03-99	SW 6010
LEAD	1.0	mg/Kg	6.59	12-03-99	SW 6010
SILVER	0.4	mg/Kg	ND	12-03-99	SW 6010
SELENIUM	2.0	mg/Kg	ND	12-03-99	SW 6010
MERCURY	0.2	mg/Kg	ND	12-02-99	SW 7471

mg/Kg = PARTS PER MILLION(PPM)
ND = NOT DETECTED ABOVE REPORTING LIMIT

ATAS 875 Fee Fee Road • Maryland Heights, MO 63043 • (314) 434-4570 - FAX (314) 434-0080

REPORT: 2834701MT(717)

DATE : 12-09-99

CLIENT: DAMES & MOORE
721 EMERSON ROAD, SUITE 220
ST. LOUIS, MO 63141
ATTN: DAVID HEINZE

SAMPLE MATRIX : SOIL
ATAS # : 28347.02
DATE SUBMITTED: 11-23-99
PROJECT : PENTAIR
SAMPLE ID : MW-6(25')

PARAMETER	REPORTING LIMIT	UNITS	RESULTS	DATE ANALYZED	METHOD REFERENCE
			METALS		
ARSENIC	1.0	mg/Kg	3.54	12-03-99	SW 6010
BARIUM	0.4	mg/Kg	27.5	12-03-99	SW 6010
CADMIUM	0.2	mg/Kg	ND	12-03-99	SW 6010
CHROMIUM	0.2	mg/Kg	11.9	12-03-99	SW 6010
LEAD	1.0	mg/Kg	6.41	12-03-99	SW 6010
SILVER	0.4	mg/Kg	ND	12-03-99	SW 6010
SELENIUM	2.0	mg/Kg	ND	12-03-99	SW 6010
MERCURY	0.2	mg/Kg	ND	11-29-99	SW 7471

mg/Kg = PARTS PER MILLION(PPM)
ND = NOT DETECTED ABOVE REPORTING LIMIT

ATAS 875 Fee Fee Road • Maryland Heights, MO 63043 • (314) 434-4570 - FAX (314) 434-0080

CLIENT: DAMES & MOORE
721 EMERSON ROAD, SUITE 220
ST. LOUIS, MO 63141
ATTN: DAVID HEINZE

REPORT: 2834701MT(717)
DATE : 12-09-99

SAMPLE MATRIX : SOIL
ATAS # : 28347.01
DATE SUBMITTED: 11-23-99
PROJECT : PENTAIR
SAMPLE ID : MW-5(18')

PARAMETER	REPORTING LIMIT	UNITS	RESULTS	DATE ANALYZED	METHOD REFERENCE
			METALS		
ARSENIC	1.0	mg/Kg	3.75	12-03-99	SW 6010
BARIUM	0.4	mg/Kg	62.5	12-03-99	SW 6010
CADMIUM	0.2	mg/Kg	ND	12-03-99	SW 6010
CHROMIUM	0.2	mg/Kg	15.9	12-03-99	SW 6010
LEAD	1.0	mg/Kg	7.39	12-03-99	SW 6010
SILVER	0.4	mg/Kg	ND	12-03-99	SW 6010
SELENIUM	2.0	mg/Kg	ND	12-03-99	SW 6010
MERCURY	0.2	mg/Kg	ND	11-29-99	SW 7471

mg/Kg = PARTS PER MILLION(PPM)
ND = NOT DETECTED ABOVE REPORTING LIMIT

ATAS 875 Fee Fee Road • Maryland Heights, MO 63043 • (314) 434-4570 - FAX (314) 434-0080

CLIENT: DAMES & MOORE
721 EMERSON ROAD, SUITE 220
ST. LOUIS, MO 63141
ATTN: DAVID HEINZE

REPORT: 2835601MT(717)

DATE : 12-08-99

SAMPLE MATRIX : SOIL
ATAS # : 28356.02
DATE SUBMITTED: 11-24-99
PROJECT : PENTAIR
SAMPLE ID : MW-4(6')

PARAMETER	REPORTING LIMIT	UNITS	RESULTS	DATE ANALYZED	METHOD REFERENCE
			METALS		
ARSENIC	1.0	mg/Kg	2.15	12-03-99	SW 6010
BARIUM	0.4	mg/Kg	83.4	12-03-99	SW 6010
CADMIUM	0.2	mg/Kg	ND	12-03-99	SW 6010
CHROMIUM	0.2	mg/Kg	15.5	12-03-99	SW 6010
LEAD	1.0	mg/Kg	3.92	12-03-99	SW 6010
SILVER	0.4	mg/Kg	ND	12-03-99	SW 6010
SELENIUM	2.0	mg/Kg	ND	12-03-99	SW 6010
MERCURY	0.2	mg/Kg	ND	12-02-99	SW 7471

mg/Kg = PARTS PER MILLION(PPM)
ND = NOT DETECTED ABOVE REPORTING LIMIT

ATAS 875 Fee Fee Road • Maryland Heights, MO 63043 • (314) 434-4570 - FAX (314) 434-0080

CLIENT: DAMES & MOORE
721 EMERSON ROAD, SUITE 220
ST. LOUIS, MO 63141
ATTN: DAVID HEINZE

REPORT: 2835601MT(717)
DATE : 12-08-99

SAMPLE MATRIX : SOIL
ATAS # : 28356.01
DATE SUBMITTED: 11-24-99
PROJECT : PENTAIR
SAMPLE ID : MW-3(8')

PARAMETER	REPORTING LIMIT	UNITS	RESULTS	DATE ANALYZED	METHOD REFERENCE
			METALS		
ARSENIC	1.0	mg/Kg	5.26	12-03-99	SW 6010
BARIUM	0.4	mg/Kg	117	12-03-99	SW 6010
CADMIUM	0.2	mg/Kg	ND	12-03-99	SW 6010
CHROMIUM	0.2	mg/Kg	12.1	12-03-99	SW 6010
LEAD	1.0	mg/Kg	17.6	12-03-99	SW 6010
SILVER	0.4	mg/Kg	ND	12-03-99	SW 6010
SELENIUM	10	mg/Kg	ND	12-03-99	SW 6010
MERCURY	0.2	mg/Kg	ND	12-02-99	SW 7471

mg/Kg = PARTS PER MILLION (PPM)
ND = NOT DETECTED ABOVE REPORTING LIMIT

ATAS 875 Fee Fee Road • Maryland Heights, MO 63043 • (314) 434-4570 - FAX (314) 434-0080

CLIENT: DAMES & MOORE
721 EMERSON ROAD, SUITE 220
ST. LOUIS, MO 63141
ATTN: DAVID HEINZE

REPORT: 2835601MT(717)
DATE : 12-08-99

SAMPLE MATRIX : SOIL
ATAS # : 28356.03
DATE SUBMITTED: 11-24-99
PROJECT : PENTAIR
SAMPLE ID : MW-2(17')

PARAMETER	REPORTING LIMIT	UNITS	RESULTS	DATE ANALYZED	METHOD REFERENCE
			METALS		
ARSENIC	1.0	mg/Kg	3.86	12-03-99	SW 6010
BARIUM	4.0	mg/Kg	517	12-03-99	SW 6010
CADMIUM	0.2	mg/Kg	ND	12-03-99	SW 6010
CHROMIUM	2.0	mg/Kg	15.0	12-03-99	SW 6010
LEAD	1.0	mg/Kg	7.89	12-03-99	SW 6010
SILVER	0.4	mg/Kg	ND	12-03-99	SW 6010
SELENIUM	5.0	mg/Kg	ND	12-03-99	SW 6010
MERCURY	0.2	mg/Kg	ND	12-02-99	SW 7471

mg/Kg = PARTS PER MILLION(PPM)
ND = NOT DETECTED ABOVE REPORTING LIMIT

ATAS 875 Fee Fee Road • Maryland Heights, MO 63043 • (314) 434-4570 - FAX (314) 434-0080

CLIENT: DAMES & MOORE
721 EMERSON ROAD, SUITE 220
ST. LOUIS, MO 63141
ATTN: DAVID HEINZE

REPORT: 2836601MT(717)
DATE : 12-08-99

SAMPLE MATRIX : SOIL
ATAS # : 28366.02
DATE SUBMITTED: 11-29-99
PROJECT : PENTAIR
SAMPLE ID : MW-1(5')

PARAMETER	REPORTING LIMIT	UNITS	RESULTS	DATE ANALYZED	METHOD REFERENCE
			METALS		
ARSENIC	1.0	mg/Kg	16.1	12-03-99	SW 6010
BARIUM	0.4	mg/Kg	249	12-03-99	SW 6010
CADMIUM	2.0	mg/Kg	ND	12-03-99	SW 6010
CHROMIUM	2.0	mg/Kg	153	12-03-99	SW 6010
LEAD	10.0	mg/Kg	1690	12-03-99	SW 6010
SILVER	4.0	mg/Kg	ND	12-03-99	SW 6010
SELENIUM	5.0	mg/Kg	ND	12-03-99	SW 6010
MERCURY	0.2	mg/Kg	0.486	12-02-99	SW 7471

mg/Kg = PARTS PER MILLION(PPM)
D = NOT DETECTED ABOVE REPORTING LIMIT

ATAS 875 Fee Fee Road • Maryland Heights, MO 63043 • (314) 434-4570 - FAX (314) 434-0080

REPORT: 2891901TP(720)

DATE : 02-17-00

CLIENT: DAMES & MOORE
721 EMERSON ROAD, SUITE 220
ST. LOUIS, MO 63141
ATTN: GEORGE JONES

SAMPLE MATRIX : SOIL
ATAS # : 28919.05
DATE SUBMITTED: 02-09-00
PROJECT : #27994-022-045 - PENTAIR
SAMPLE ID : GP-15-19'

PARAMETER	REPORTING LIMIT	RESULTS	DATE EXTRACTED	DATE ANALYZED
TOTAL EXTRACTABLE HYDROCARBONS (OA-2/8015)				
RESULTS REPORTED IN mg/Kg OR PARTS PER MILLION(PPM)				
GASOLINE C6-C14	3.0	ND	02-11-00	02-12-00
MINERAL SPIRITS C7-C14	3.0	ND	02-11-00	02-12-00
KEROSENE C9-C16	3.0	ND	02-11-00	02-12-00
DIESEL C7-C26	3.0	ND	02-11-00	02-12-00
#6 FUEL OIL C10-C32	3.0	ND	02-11-00	02-12-00
HYDRAULIC FLUID C12-C33	3.0	ND	02-11-00	02-12-00
MOTOR OIL C16-C33	3.0	ND	02-11-00	02-12-00
MISCELLANEOUS (1)	3.0	14.1	02-11-00	02-12-00
MISCELLANEOUS (2)	3.0	18.6	02-11-00	02-12-00

QA/QC SURROGATE RECOVERY

P-TERPHENYL D14 I %

(1) = ANALYSIS SHOWS PEAKS WHICH CANNOT BE MATCHED TO ANY HYDROCARBON STANDARD LISTED ABOVE. THE PATTERN IS MOST SIMILAR TO THE DIESEL FUEL AND WAS QUANTITATED FROM THAT STANDARD.

(2) = ANALYSIS SHOWS PEAKS WHICH CANNOT BE MATCHED TO ANY HYDROCARBON STANDARD LISTED ABOVE. THE PATTERN IS MOST SIMILAR TO THE MOTOR OIL AND WAS QUANTITATED FROM THAT STANDARD.

ND = NOT DETECTED ABOVE REPORTING LIMIT

* = OUTSIDE QC LIMIT

I = NOT QUANTIFIABLE DUE TO MATRIX INTERFERENCE

ATAS 875 Fee Fee Road • Maryland Heights, MO 63043 • (314) 434-4570 - FAX (314) 434-0080

CLIENT: DAMES & MOORE
721 EMERSON ROAD, SUITE 220
ST. LOUIS, MO 63141
ATTN: GEORGE JONES

REPORT: 2891901TP(720)
DATE : 02-17-00

SAMPLE MATRIX : SOIL
ATAS # : 28919.04
DATE SUBMITTED: 02-09-00
PROJECT : #27994-022-045 - PENTAIR
SAMPLE ID : GP-15-4'

PARAMETER	REPORTING LIMIT	RESULTS	DATE EXTRACTED	DATE ANALYZED
TOTAL EXTRACTABLE HYDROCARBONS (OA-2/8015)				
RESULTS REPORTED IN mg/Kg OR PARTS PER MILLION(PPM)				
GASOLINE C6-C14	3.0	ND	02-15-00	02-15-00
MINERAL SPIRITS C7-C14	3.0	ND	02-15-00	02-15-00
KEROSENE C9-C16	3.0	ND	02-15-00	02-15-00
DIESEL C7-C26	3.0	ND	02-15-00	02-15-00
#6 FUEL OIL C10-C32	3.0	ND	02-15-00	02-15-00
HYDRAULIC FLUID C12-C33	3.0	ND	02-15-00	02-15-00
MOTOR OIL C16-C33	3.0	ND	02-15-00	02-15-00

QA/QC SURROGATE RECOVERY

P-TERPHENYL D14 83 %

ND = NOT DETECTED ABOVE REPORTING LIMIT
* = OUTSIDE QC LIMIT
I = NOT QUANTIFIABLE DUE TO MATRIX INTERFERENCE

ATAS 875 Fee Fee Road • Maryland Heights, MO 63043 • (314) 434-4570 - FAX (314) 434-0080

REPORT: 2891901TP(720)

DATE : 02-17-00

CLIENT: DAMES & MOORE
721 EMERSON ROAD, SUITE 220
ST. LOUIS, MO 63141
ATTN: GEORGE JONES

SAMPLE MATRIX : SOIL
ATAS # : 28919.02
DATE SUBMITTED: 02-09-00
PROJECT : #27994-022-045 - PENTAIR
SAMPLE ID : GP-14-15'

PARAMETER	REPORTING LIMIT	RESULTS	DATE EXTRACTED	DATE ANALYZED
TOTAL EXTRACTABLE HYDROCARBONS (OA-2/8015)				
RESULTS REPORTED IN mg/Kg OR PARTS PER MILLION(PPM)				
GASOLINE C6-C14	3.0	ND	02-11-00	02-14-00
MINERAL SPIRITS C7-C14	3.0	ND	02-11-00	02-14-00
KEROSENE C9-C16	3.0	ND	02-11-00	02-14-00
DIESEL C7-C26	3.0	ND	02-11-00	02-14-00
#6 FUEL OIL C10-C32	3.0	ND	02-11-00	02-14-00
HYDRAULIC FLUID C12-C33	3.0	ND	02-11-00	02-14-00
OR OIL C16-C33	3.0	ND	02-11-00	02-14-00

QA/QC SURROGATE RECOVERY

P-TERPHENYL D14 77 %

ND = NOT DETECTED ABOVE REPORTING LIMIT
* = OUTSIDE QC LIMIT
I = NOT QUANTIFIABLE DUE TO MATRIX INTERFERENCE

ATAS 875 Fee Fee Road • Maryland Heights, MO 63043 • (314) 434-4570 - FAX (314) 434-0080

REPORT: 2891901TP(720)

DATE : 02-17-00

ENT: DAMES & MOORE
721 EMERSON ROAD, SUITE 220
ST. LOUIS, MO 63141
ATTN: GEORGE JONES

SAMPLE MATRIX : SOIL
ATAS # : 28919.01
DATE SUBMITTED: 02-09-00
PROJECT : #27994-022-045 - PENTAIR
SAMPLE ID : GP-14-4'

PARAMETER	REPORTING LIMIT	RESULTS	DATE EXTRACTED	DATE ANALYZED
TOTAL EXTRACTABLE HYDROCARBONS (OA-2/8015)				
RESULTS REPORTED IN mg/Kg OR PARTS PER MILLION(PPM)				
GASOLINE C6-C14	60.0	ND	02-11-00	02-15-00
MINERAL SPIRITS C7-C14	60.0	1200	02-11-00	02-15-00
KEROSENE C9-C16	60.0	ND	02-11-00	02-15-00
DIESEL C7-C26	60.0	ND	02-11-00	02-15-00
#6 FUEL OIL C10-C32	15.0	ND	02-11-00	02-14-00
HYDRAULIC FLUID C12-C33	15.0	ND	02-11-00	02-14-00
MOTOR OIL C16-C33	15.0	ND	02-11-00	02-14-00
MISCELLANEOUS (1)	15.0	515	02-11-00	02-14-00

QA/QC SURROGATE RECOVERY

P-TERPHENYL D14 D %

(1) = ANALYSIS SHOWS PEAKS WHICH CANNOT BE MATCHED TO ANY HYDROCARBON STANDARD LISTED ABOVE. THE PATTERN IS MOST SIMILAR TO HYDRAULIC FLUID AND WAS QUANTITATED FROM THAT STANDARD.
ND = NOT DETECTED ABOVE REPORTING LIMIT
* = OUTSIDE QC LIMIT
D = DILUTED OUT

ATAS 875 Fee Fee Road • Maryland Heights, MO 63043 • (314) 434-4570 - FAX (314) 434-0080

ENT: DAMES & MOORE
721 EMERSON ROAD, SUITE 220
ST. LOUIS, MO 63141
ATTN: GEORGE JONES

REPORT: 2891301TP(720)

DATE : 02-15-00

SAMPLE MATRIX : SOIL
ATAS # : 28913.14
DATE SUBMITTED: 02-09-00
PROJECT : #27994-022-045 - PENTAIR
SAMPLE ID : GP-13-11'

PARAMETER	REPORTING LIMIT	RESULTS	DATE EXTRACTED	DATE ANALYZED
TOTAL EXTRACTABLE HYDROCARBONS (OA-2/8015)				
RESULTS REPORTED IN mg/Kg OR PARTS PER MILLION(PPM)				
GASOLINE C6-C14	3.0	ND	02-11-00	02-12-00
MINERAL SPIRITS C7-C14	3.0	ND	02-11-00	02-12-00
KEROSENE C9-C16	3.0	ND	02-11-00	02-12-00
DIESEL C7-C26	3.0	ND	02-11-00	02-12-00
#6 FUEL OIL C10-C32	3.0	ND	02-11-00	02-12-00
HYDRAULIC FLUID C12-C33	3.0	ND	02-11-00	02-12-00
MOTOR OIL C16-C33	3.0	ND	02-11-00	02-12-00

QA/QC SURROGATE RECOVERY

P-TERPHENYL D14 90 %

ND = NOT DETECTED ABOVE REPORTING LIMIT
* = OUTSIDE QC LIMIT ON BOTH ORIGINAL AND RERUN
I = NOT QUANTIFIABLE DUE TO MATRIX INTERFERENCE

ATAS 875 Fee Fee Road • Maryland Heights, MO 63043 • (314) 434-4570 - FAX (314) 434-0080

CLIENT: DAMES & MOORE
721 EMERSON ROAD, SUITE 220
ST. LOUIS, MO 63141
ATTN: GEORGE JONES

REPORT: 2891301TP(720)
DATE : 02-15-00

SAMPLE MATRIX : SOIL
ATAS # : 28913.13
DATE SUBMITTED: 02-09-00
PROJECT : #27994-022-045 - PENTAIR
SAMPLE ID : GP-13-7'

PARAMETER	REPORTING LIMIT	RESULTS	DATE EXTRACTED	DATE ANALYZED
TOTAL EXTRACTABLE HYDROCARBONS (OA-2/8015)				
RESULTS REPORTED IN mg/Kg OR PARTS PER MILLION(PPM)				
GASOLINE C6-C14	3.0	ND	02-11-00	02-12-00
MINERAL SPIRITS C7-C14	3.0	ND	02-11-00	02-12-00
KEROSENE C9-C16	3.0	ND	02-11-00	02-12-00
DIESEL C7-C26	3.0	ND	02-11-00	02-12-00
#6 FUEL OIL C10-C32	3.0	ND	02-11-00	02-12-00
HYDRAULIC FLUID C12-C33	3.0	ND	02-11-00	02-12-00
MOTOR OIL C16-C33	3.0	ND	02-11-00	02-12-00
MISCELLANEOUS (1)	3.0	67.6	02-11-00	02-12-00

QA/QC SURROGATE RECOVERY

P-TERPHENYL D14 I %

(1) = ANALYSIS SHOWS PEAKS WHICH CANNOT BE MATCHED TO ANY HYDROCARBON STANDARD LISTED ABOVE. THE PATTERN IS MOST SIMILAR TO THE MOTOR OIL AND WAS QUANTITATED FROM THAT STANDARD.
ND = NOT DETECTED ABOVE REPORTING LIMIT
* = OUTSIDE QC LIMIT ON BOTH ORIGINAL AND RERUN
I = NOT QUANTIFIABLE DUE TO MATRIX INTERFERENCE

ATAS 875 Fee Fee Road • Maryland Heights, MO 63043 • (314) 434-4570 - FAX (314) 434-0080

CLIENT: DAMES & MOORE
721 EMERSON ROAD, SUITE 220
ST. LOUIS, MO 63141
ATTN: GEORGE JONES

REPORT: 2891301TP(720)
DATE : 02-15-00

SAMPLE MATRIX : SOIL
ATAS # : 28913.12
DATE SUBMITTED: 02-09-00
PROJECT : #27994-022-045 - PENTAIR
SAMPLE ID : GP-12-14'

PARAMETER	REPORTING LIMIT	RESULTS	DATE EXTRACTED	DATE ANALYZED
TOTAL EXTRACTABLE HYDROCARBONS (OA-2/8015)				
RESULTS REPORTED IN mg/Kg OR PARTS PER MILLION(PPM)				
GASOLINE C6-C14	3.0	ND	02-11-00	02-14-00
MINERAL SPIRITS C7-C14	3.0	ND	02-11-00	02-14-00
KEROSENE C9-C16	3.0	ND	02-11-00	02-14-00
DIESEL C7-C26	3.0	ND	02-11-00	02-14-00
#6 FUEL OIL C10-C32	3.0	ND	02-11-00	02-14-00
HYDRAULIC FLUID C12-C33	3.0	ND	02-11-00	02-14-00
MOTOR OIL C16-C33	3.0	ND	02-11-00	02-14-00
MISCELLANEOUS (1)	3.0	191	02-11-00	02-14-00

QA/QC SURROGATE RECOVERY

P-TERPHENYL D14 I %

(1) = ANALYSIS SHOWS PEAKS WHICH CANNOT BE MATCHED TO ANY HYDROCARBON STANDARD LISTED ABOVE. THE PATTERN IS MOST SIMILAR TO HYDRAULIC FLUID AND WAS QUANTITATED FROM THAT STANDARD.
ND = NOT DETECTED ABOVE REPORTING LIMIT
* = OUTSIDE QC LIMIT ON BOTH ORIGINAL AND RERUN
I = NOT QUANTIFIABLE DUE TO MATRIX INTERFERENCE

ATAS 875 Fee Fee Road • Maryland Heights, MO 63043 • (314) 434-4570 - FAX (314) 434-0080

CLIENT: DAMES & MOORE
721 EMERSON ROAD, SUITE 220
ST. LOUIS, MO 63141
ATTN: GEORGE JONES

REPORT: 2891301TP(720)

DATE : 02-15-00

SAMPLE MATRIX : SOIL
ATAS # : 28913.11
DATE SUBMITTED: 02-09-00
PROJECT : #27994-022-045 - PENTAIR
SAMPLE ID : GP-12-4'

PARAMETER	REPORTING LIMIT	RESULTS	DATE EXTRACTED	DATE ANALYZED
TOTAL EXTRACTABLE HYDROCARBONS (OA-2/8015)				
RESULTS REPORTED IN mg/Kg OR PARTS PER MILLION(PPM)				
GASOLINE C6-C14	9.00	ND	02-11-00	02-14-00
MINERAL SPIRITS C7-C14	9.00	65.0	02-11-00	02-14-00
KEROSENE C9-C16	9.00	ND	02-11-00	02-14-00
DIESEL C7-C26	9.00	ND	02-11-00	02-14-00
#6 FUEL OIL C10-C32	9.00	ND	02-11-00	02-14-00
HYDRAULIC FLUID C12-C33	9.00	ND	02-11-00	02-14-00
MOTOR OIL C16-C33	9.00	ND	02-11-00	02-14-00
MISCELLANEOUS (1)	9.00	767	02-11-00	02-14-00

QA/QC SURROGATE RECOVERY

P-TERPHENYL D14 D %

(1) = ANALYSIS SHOWS PEAKS WHICH CANNOT BE MATCHED TO ANY HYDROCARBON STANDARD LISTED ABOVE. THE PATTERN IS MOST SIMILAR TO HYDRAULIC FLUID AND WAS QUANTITATED FROM THAT STANDARD.
ND = NOT DETECTED ABOVE REPORTING LIMIT
* = OUTSIDE QC LIMIT ON BOTH ORIGINAL AND RERUN
D = DILUTED OUT

ATAS 875 Fee Fee Road • Maryland Heights, MO 63043 • (314) 434-4570 - FAX (314) 434-0080

CLIENT: DAMES & MOORE
721 EMERSON ROAD, SUITE 220
ST. LOUIS, MO 63141
ATTN: GEORGE JONES

REPORT: 2891301TP(720)
DATE : 02-15-00

SAMPLE MATRIX : SOIL
ATAS # : 28913.10
DATE SUBMITTED: 02-09-00
PROJECT : #27994-022-045 - PENTAIR
SAMPLE ID : GP-11-14'

PARAMETER	REPORTING LIMIT	RESULTS	DATE EXTRACTED	DATE ANALYZED
TOTAL EXTRACTABLE HYDROCARBONS (OA-2/8015)				
RESULTS REPORTED IN mg/Kg OR PARTS PER MILLION(PPM)				
GASOLINE C6-C14	9.00	ND	02-11-00	02-14-00
MINERAL SPIRITS C7-C14	9.00	58.5	02-11-00	02-14-00
KEROSENE C9-C16	9.00	ND	02-11-00	02-14-00
DIESEL C7-C26	9.00	ND	02-11-00	02-14-00
#6 FUEL OIL C10-C32	9.00	ND	02-11-00	02-14-00
HYDRAULIC FLUID C12-C33	9.00	ND	02-11-00	02-14-00
MOTOR OIL C16-C33	9.00	ND	02-11-00	02-14-00
MISCELLANEOUS (1)	9.00	340	02-11-00	02-14-00

QA/QC SURROGATE RECOVERY

P-TERPHENYL D14 D %

(1) = ANALYSIS SHOWS PEAKS WHICH CANNOT BE MATCHED TO ANY HYDROCARBON STANDARD LISTED ABOVE. THE PATTERN IS MOST SIMILAR TO HYDRAULIC FLUID AND WAS QUANTITATED FROM THAT STANDARD.
ND = NOT DETECTED ABOVE REPORTING LIMIT
* = OUTSIDE QC LIMIT ON BOTH ORIGINAL AND RERUN
D = DILUTED OUT

ATAS 875 Fee Fee Road • Maryland Heights, MO 63043 • (314) 434-4570 - FAX (314) 434-0080

REPORT: 2891301TP(720)

DATE : 02-15-00

TENT: DAMES & MOORE
721 EMERSON ROAD, SUITE 220
ST. LOUIS, MO 63141
ATTN: GEORGE JONES

SAMPLE MATRIX : SOIL
ATAS # : 28913.09
DATE SUBMITTED: 02-09-00
PROJECT : #27994-022-045 - PENTAIR
SAMPLE ID : GP-11-4'

PARAMETER	REPORTING LIMIT	RESULTS	DATE EXTRACTED	DATE ANALYZED
TOTAL EXTRACTABLE HYDROCARBONS (OA-2/8015)				
RESULTS REPORTED IN mg/Kg OR PARTS PER MILLION(PPM)				
GASOLINE C6-C14	30.0	ND	02-11-00	02-14-00
MINERAL SPIRITS C7-C14	30.0	640	02-11-00	02-14-00
KEROSENE C9-C16	30.0	ND	02-11-00	02-14-00
DIESEL C7-C26	30.0	ND	02-11-00	02-14-00
#6 FUEL OIL C10-C32	30.0	ND	02-11-00	02-14-00
HYDRAULIC FLUID C12-C33	30.0	ND	02-11-00	02-14-00
MOTOR OIL C16-C33	30.0	ND	02-11-00	02-14-00
MISCELLANEOUS (1)	30.0	1960	02-11-00	02-14-00

QA/QC SURROGATE RECOVERY

P-TERPHENYL D14 D %

(1) = ANALYSIS SHOWS PEAKS WHICH CANNOT BE MATCHED TO ANY HYDROCARBON STANDARD LISTED ABOVE. THE PATTERN IS MOST SIMILAR TO HYDRAULIC FLUID AND WAS QUANTITATED FROM THAT STANDARD.
ND = NOT DETECTED ABOVE REPORTING LIMIT
* = OUTSIDE QC LIMIT ON BOTH ORIGINAL AND RERUN
D = DILUTED OUT

ATAS 875 Fee Fee Road • Maryland Heights, MO 63043 • (314) 434-4570 - FAX (314) 434-0080

TENT: DAMES & MOORE
721 EMERSON ROAD, SUITE 220
ST. LOUIS, MO 63141
ATTN: GEORGE JONES

REPORT: 2891301TP(720)
DATE : 02-15-00

SAMPLE MATRIX : SOIL
ATAS # : 28913.08
DATE SUBMITTED: 02-09-00
PROJECT : #27994-022-045 - PENTAIR
SAMPLE ID : GP-10-10'

PARAMETER	REPORTING LIMIT	RESULTS	DATE EXTRACTED	DATE ANALYZED
TOTAL EXTRACTABLE HYDROCARBONS (OA-2/8015)				
RESULTS REPORTED IN mg/Kg OR PARTS PER MILLION(PPM)				
GASOLINE C6-C14	3.0	ND	02-11-00	02-14-00
MINERAL SPIRITS C7-C14	3.0	ND	02-11-00	02-14-00
KEROSENE C9-C16	3.0	ND	02-11-00	02-14-00
DIESEL C7-C26	3.0	ND	02-11-00	02-14-00
#6 FUEL OIL C10-C32	3.0	ND	02-11-00	02-14-00
HYDRAULIC FLUID C12-C33	3.0	ND	02-11-00	02-14-00
MOTOR OIL C16-C33	3.0	ND	02-11-00	02-14-00

QA/QC SURROGATE RECOVERY

P-TERPHENYL D14 86 %

ND = NOT DETECTED ABOVE REPORTING LIMIT
* = OUTSIDE QC LIMIT ON BOTH ORIGINAL AND RERUN
I = NOT QUANTIFIABLE DUE TO MATRIX INTERFERENCE

ATAS 875 Fee Fee Road • Maryland Heights, MO 63043 • (314) 434-4570 - FAX (314) 434-0080

ENT: DAMES & MOORE
721 EMERSON ROAD, SUITE 220
ST. LOUIS, MO 63141
ATTN: GEORGE JONES

REPORT: 2891301TP(720)
DATE : 02-15-00

SAMPLE MATRIX : SOIL
ATAS # : 28913.07
DATE SUBMITTED: 02-09-00
PROJECT : #27994-022-045 - PENTAIR
SAMPLE ID : GP-10-4'

PARAMETER	REPORTING LIMIT	RESULTS	DATE EXTRACTED	DATE ANALYZED
TOTAL EXTRACTABLE HYDROCARBONS (OA-2/8015)				
RESULTS REPORTED IN mg/Kg OR PARTS PER MILLION(PPM)				
GASOLINE C6-C14	12.0	ND	02-11-00	02-14-00
MINERAL SPIRITS C7-C14	12.0	113	02-11-00	02-14-00
KEROSENE C9-C16	12.0	ND	02-11-00	02-14-00
DIESEL C7-C26	12.0	ND	02-11-00	02-14-00
#6 FUEL OIL C10-C32	12.0	ND	02-11-00	02-14-00
HYDRAULIC FLUID C12-C33	12.0	ND	02-11-00	02-14-00
MOTOR OIL C16-C33	12.0	ND	02-11-00	02-14-00
MISCELLANEOUS (1)	12.0	887	02-11-00	02-14-00

QA/QC SURROGATE RECOVERY

P-TERPHENYL D14 D %

(1) = ANALYSIS SHOWS PEAKS WHICH CANNOT BE MATCHED TO ANY HYDROCARBON STANDARD LISTED ABOVE. THE PATTERN IS MOST SIMILAR TO HYDRAULIC FLUID AND WAS QUANTITATED FROM THAT STANDARD.
ND = NOT DETECTED ABOVE REPORTING LIMIT
* = OUTSIDE QC LIMIT ON BOTH ORIGINAL AND RERUN
D = DILUTED OUT

ATAS 875 Fee Fee Road • Maryland Heights, MO 63043 • (314) 434-4570 - FAX (314) 434-0080

CLIENT: DAMES & MOORE
721 EMERSON ROAD, SUITE 220
ST. LOUIS, MO 63141
ATTN: GEORGE JONES

REPORT: 2891301TP(720)
DATE : 02-15-00

SAMPLE MATRIX : SOIL
ATAS # : 28913.06
DATE SUBMITTED: 02-09-00
PROJECT : #27994-022-045 - PENTAIR
SAMPLE ID : GP-9-7'

PARAMETER	REPORTING LIMIT	RESULTS	DATE EXTRACTED	DATE ANALYZED
TOTAL EXTRACTABLE HYDROCARBONS (OA-2/8015)				
RESULTS REPORTED IN mg/Kg OR PARTS PER MILLION(PPM)				
GASOLINE C6-C14	3.0	ND	02-11-00	02-12-00
MINERAL SPIRITS C7-C14	3.0	ND	02-11-00	02-12-00
KEROSENE C9-C16	3.0	ND	02-11-00	02-12-00
DIESEL C7-C26	3.0	ND	02-11-00	02-12-00
#6 FUEL OIL C10-C32	3.0	ND	02-11-00	02-12-00
HYDRAULIC FLUID C12-C33	3.0	ND	02-11-00	02-12-00
TOR OIL C16-C33	3.0	ND	02-11-00	02-12-00

QA/QC SURROGATE RECOVERY

P-TERPHENYL D14 75 %

ND = NOT DETECTED ABOVE REPORTING LIMIT
* = OUTSIDE QC LIMIT ON BOTH ORIGINAL AND RERUN
I = NOT QUANTIFIABLE DUE TO MATRIX INTERFERENCE

ATAS 875 Fee Fee Road • Maryland Heights, MO 63043 • (314) 434-4570 - FAX (314) 434-0080

'ENT: DAMES & MOORE
721 EMERSON ROAD, SUITE 220
ST. LOUIS, MO 63141
ATTN: GEORGE JONES

REPORT: 2891301TP(720)

DATE : 02-15-00

SAMPLE MATRIX : SOIL
ATAS # : 28913.05
DATE SUBMITTED: 02-09-00
PROJECT : #27994-022-045 - PENTAIR
SAMPLE ID : GP-9-4'

PARAMETER	REPORTING LIMIT	RESULTS	DATE EXTRACTED	DATE ANALYZED
TOTAL EXTRACTABLE HYDROCARBONS (OA-2/8015)				
RESULTS REPORTED IN mg/Kg OR PARTS PER MILLION(PPM)				
GASOLINE C6-C14	3.0	ND	02-11-00	02-12-00
MINERAL SPIRITS C7-C14	3.0	ND	02-11-00	02-12-00
KEROSENE C9-C16	3.0	ND	02-11-00	02-12-00
DIESEL C7-C26	3.0	ND	02-11-00	02-12-00
#6 FUEL OIL C10-C32	3.0	ND	02-11-00	02-12-00
'DRAULIC FLUID C12-C33	3.0	ND	02-11-00	02-12-00
:OR OIL C16-C33	3.0	ND	02-11-00	02-12-00

QA/QC SURROGATE RECOVERY

P-TERPHENYL D14 88 %

ND = NOT DETECTED ABOVE REPORTING LIMIT
* = OUTSIDE QC LIMIT ON BOTH ORIGINAL AND RERUN
I = NOT QUANTIFIABLE DUE TO MATRIX INTERFERENCE

ATAS 875 Fee Fee Road • Maryland Heights, MO 63043 • (314) 434-4570 - FAX (314) 434-0080

CLIENT: DAMES & MOORE
721 EMERSON ROAD, SUITE 220
ST. LOUIS, MO 63141
ATTN: GEORGE JONES

REPORT: 2891301TP(720)
DATE : 02-15-00

SAMPLE MATRIX : SOIL
ATAS # : 28913.04
DATE SUBMITTED: 02-09-00
PROJECT : #27994-022-045 - PENTAIR
SAMPLE ID : GP-8-10'

PARAMETER	REPORTING LIMIT	RESULTS	DATE EXTRACTED	DATE ANALYZED
TOTAL EXTRACTABLE HYDROCARBONS (QA-2/8015)				
RESULTS REPORTED IN mg/Kg OR PARTS PER MILLION(PPM)				
GASOLINE C6-C14	3.0	ND	02-11-00	02-14-00
MINERAL SPIRITS C7-C14	3.0	ND	02-11-00	02-14-00
KEROSENE C9-C16	3.0	ND	02-11-00	02-14-00
DIESEL C7-C26	3.0	ND	02-11-00	02-14-00
#6 FUEL OIL C10-C32	3.0	ND	02-11-00	02-14-00
HYDRAULIC FLUID C12-C33	3.0	ND	02-11-00	02-14-00
TOR OIL C16-C33	3.0	ND	02-11-00	02-14-00
...SCELLANEOUS (1)	3.0	95.7	02-11-00	02-14-00

QA/QC SURROGATE RECOVERY

P-TERPHENYL D14 I %

= ANALYSIS SHOWS PEAKS WHICH CANNOT BE MATCHED TO ANY HYDROCARBON STANDARD LISTED ABOVE. THE PATTERN IS MOST SIMILAR TO HYDRAULIC FLUID AND WAS QUANTITATED FROM THAT STANDARD.
ND = NOT DETECTED ABOVE REPORTING LIMIT
* = OUTSIDE QC LIMIT ON BOTH ORIGINAL AND RERUN
I = NOT QUANTIFIABLE DUE TO MATRIX INTERFERENCE

ATAS 875 Fee Fee Road • Maryland Heights, MO 63043 • (314) 434-4570 - FAX (314) 434-0080

CLIENT: DAMES & MOORE
721 EMERSON ROAD, SUITE 220
ST. LOUIS, MO 63141
ATTN: GEORGE JONES

REPORT: 2891301TP(720)
DATE : 02-15-00

SAMPLE MATRIX : SOIL
ATAS # : 28913.03
DATE SUBMITTED: 02-09-00
PROJECT : #27994-022-045 - PENTAIR
SAMPLE ID : GP-8-6'

PARAMETER	REPORTING LIMIT	RESULTS	DATE EXTRACTED	DATE ANALYZED
TOTAL EXTRACTABLE HYDROCARBONS (OA-2/8015)				
RESULTS REPORTED IN mg/Kg OR PARTS PER MILLION(PPM)				
GASOLINE C6-C14	3.0	ND	02-11-00	02-14-00
MINERAL SPIRITS C7-C14	3.0	143	02-11-00	02-14-00
KEROSENE C9-C16	3.0	ND	02-11-00	02-14-00
DIESEL C7-C26	15.0	ND	02-11-00	02-14-00
#6 FUEL OIL C10-C32	15.0	ND	02-11-00	02-14-00
HYDRAULIC FLUID C12-C33	15.0	ND	02-11-00	02-14-00
MOTOR OIL C16-C33	15.0	ND	02-11-00	02-14-00
MISCELLANEOUS (1)	15.0	1480	02-11-00	02-14-00

QA/QC SURROGATE RECOVERY

P-TERPHENYL D14 I %

= ANALYSIS SHOWS PEAKS WHICH CANNOT BE MATCHED TO ANY HYDROCARBON STANDARD LISTED ABOVE. THE PATTERN IS MOST SIMILAR TO HYDRAULIC FLUID AND WAS QUANTITATED FROM THAT STANDARD.
ND = NOT DETECTED ABOVE REPORTING LIMIT
* = OUTSIDE QC LIMIT ON BOTH ORIGINAL AND RERUN
I = NOT QUANTIFIABLE DUE TO MATRIX INTERFERENCE

ATAS 875 Fee Fee Road • Maryland Heights, MO 63043 • (314) 434-4570 - FAX (314) 434-0080

REPORT: 2891301TP(720)

DATE : 02-15-00

ENT: DAMES & MOORE
721 EMERSON ROAD, SUITE 220
ST. LOUIS, MO 63141
ATTN: GEORGE JONES

SAMPLE MATRIX : SOIL
ATAS # : 28913.02
DATE SUBMITTED: 02-09-00
PROJECT : #27994-022-045 - PENTAIR
SAMPLE ID : GP-7-8'

PARAMETER	REPORTING LIMIT	RESULTS	DATE EXTRACTED	DATE ANALYZED
TOTAL EXTRACTABLE HYDROCARBONS (OA-2/8015)				
RESULTS REPORTED IN mg/Kg OR PARTS PER MILLION(PPM)				
GASOLINE C6-C14	3.0	ND	02-11-00	02-14-00
MINERAL SPIRITS C7-C14	3.0	15.4	02-11-00	02-14-00
KEROSENE C9-C16	3.0	ND	02-11-00	02-14-00
DIESEL C7-C26	3.0	ND	02-11-00	02-14-00
#6 FUEL OIL C10-C32	3.0	ND	02-11-00	02-14-00
HYDRAULIC FLUID C12-C33	3.0	ND	02-11-00	02-14-00
MOTOR OIL C16-C33	3.0	ND	02-11-00	02-14-00
MISCELLANEOUS (1)	3.0	253	02-11-00	02-14-00

QA/QC SURROGATE RECOVERY

P-TERPHENYL D14 I %

(1) = ANALYSIS SHOWS PEAKS WHICH CANNOT BE MATCHED TO ANY HYDROCARBON STANDARD LISTED ABOVE. THE PATTERN IS MOST SIMILAR TO HYDRAULIC FLUID AND WAS QUANTITATED FROM THAT STANDARD.
ND = NOT DETECTED ABOVE REPORTING LIMIT
* = OUTSIDE QC LIMIT ON BOTH ORIGINAL AND RERUN
I = NOT QUANTIFIABLE DUE TO MATRIX INTERFERENCE

ATAS 875 Fee Fee Road • Maryland Heights, MO 63043 • (314) 434-4570 - FAX (314) 434-0080

REPORT: 2891301TP(720)

DATE : 02-15-00

ENT: DAMES & MOORE
721 EMERSON ROAD, SUITE 220
ST. LOUIS, MO 63141
ATTN: GEORGE JONES

SAMPLE MATRIX : SOIL
ATAS # : 28913.01
DATE SUBMITTED: 02-09-00
PROJECT : #27994-022-045 - PENTAIR
SAMPLE ID : GP-7-4'

PARAMETER	REPORTING LIMIT	RESULTS	DATE EXTRACTED	DATE ANALYZED
TOTAL EXTRACTABLE HYDROCARBONS (OA-2/8015)				
RESULTS REPORTED IN mg/Kg OR PARTS PER MILLION (PPM)				
GASOLINE C6-C14	30.0	ND	02-11-00	02-15-00
MINERAL SPIRITS C7-C14	30.0	2060	02-11-00	02-15-00
KEROSENE C9-C16	30.0	ND	02-11-00	02-15-00
DIESEL C7-C26	30.0	ND	02-11-00	02-15-00
#6 FUEL OIL C10-C32	30.0	ND	02-11-00	02-15-00
HYDRAULIC FLUID C12-C33	30.0	ND	02-11-00	02-15-00
MOTOR OIL C16-C33	30.0	ND	02-11-00	02-15-00
MISCELLANEOUS (1)	30.0	14300	02-11-00	02-15-00

QA/QC SURROGATE RECOVERY

P-TERPHENYL D14 D %

(1) = ANALYSIS SHOWS PEAKS WHICH CANNOT BE MATCHED TO ANY HYDROCARBON STANDARD LISTED ABOVE. THE PATTERN IS MOST SIMILAR TO HYDRAULIC FLUID AND WAS QUANTITATED FROM THAT STANDARD.
ND = NOT DETECTED ABOVE REPORTING LIMIT
* = OUTSIDE QC LIMIT ON BOTH ORIGINAL AND RERUN
D = DILUTED OUT

ATAS 875 Fee Fee Road • Maryland Heights, MO 63043 • (314) 434-4570 - FAX (314) 434-0080

REPORT: 2889901TP(720)

DATE : 02-14-00

ENT: DAMES & MOORE
721 EMERSON ROAD, SUITE 220
ST. LOUIS, MO 63141
ATTN: GEORGE JONES

SAMPLE MATRIX : SOIL
ATAS # : 28899.15
DATE SUBMITTED: 02-08-00
PROJECT : PENTAIR
SAMPLE ID : GP-6-14'

PARAMETER	REPORTING LIMIT	RESULTS	DATE EXTRACTED	DATE ANALYZED
TOTAL EXTRACTABLE HYDROCARBONS (QA-2/8015)				
RESULTS REPORTED IN mg/Kg OR PARTS PER MILLION(PPM)				
GASOLINE C6-C14	3.0	ND	02-10-00	02-11-00
MINERAL SPIRITS C7-C14	3.0	ND	02-10-00	02-11-00
KEROSENE C9-C16	3.0	ND	02-10-00	02-11-00
DIESEL C7-C26	3.0	ND	02-10-00	02-11-00
#6 FUEL OIL C10-C32	3.0	ND	02-10-00	02-11-00
DRAULIC FLUID C12-C33	3.0	ND	02-10-00	02-11-00
FOR OIL C16-C33	3.0	ND	02-10-00	02-11-00

QA/QC SURROGATE RECOVERY

P-TERPHENYL D14 81 %

ND = NOT DETECTED ABOVE REPORTING LIMIT
* = OUTSIDE QC LIMIT
I = NOT QUANTIFIABLE DUE TO MATRIX INTERFERENCE

ATAS 875 Fee Fee Road • Maryland Heights, MO 63043 • (314) 434-4570 - FAX (314) 434-0080

CLIENT: DAMES & MOORE
721 EMERSON ROAD, SUITE 220
ST. LOUIS, MO 63141
ATTN: GEORGE JONES

REPORT: 2889901TP(720)

DATE : 02-14-00

SAMPLE MATRIX : SOIL
ATAS # : 28899.14
DATE SUBMITTED: 02-08-00
PROJECT : PENTAIR
SAMPLE ID : GP-6-6'

PARAMETER	REPORTING LIMIT	RESULTS	DATE EXTRACTED	DATE ANALYZED
TOTAL EXTRACTABLE HYDROCARBONS (OA-2/8015)				
RESULTS REPORTED IN mg/Kg OR PARTS PER MILLION(PPM)				
GASOLINE C6-C14	3.0	ND	02-10-00	02-11-00
MINERAL SPIRITS C7-C14	3.0	ND	02-10-00	02-11-00
KEROSENE C9-C16	3.0	ND	02-10-00	02-11-00
DIESEL C7-C26	3.0	ND	02-10-00	02-11-00
#6 FUEL OIL C10-C32	3.0	ND	02-10-00	02-11-00
HYDRAULIC FLUID C12-C33	3.0	ND	02-10-00	02-11-00
MOTOR OIL C16-C33	3.0	ND	02-10-00	02-11-00

QA/QC SURROGATE RECOVERY

P-TERPHENYL D14 86 %

ND = NOT DETECTED ABOVE REPORTING LIMIT
* = OUTSIDE QC LIMIT
I = NOT QUANTIFIABLE DUE TO MATRIX INTERFERENCE

ATAS 875 Fee Fee Road • Maryland Heights, MO 63043 • (314) 434-4570 - FAX (314) 434-0080

REPORT: 2889901TP(720)

DATE : 02-14-00

CLIENT: DAMES & MOORE
721 EMERSON ROAD, SUITE 220
ST. LOUIS, MO 63141
ATTN: GEORGE JONES

SAMPLE MATRIX : SOIL
ATAS # : 28899.13
DATE SUBMITTED: 02-08-00
PROJECT : PENTAIR
SAMPLE ID : GP-5-11'

PARAMETER	REPORTING LIMIT	RESULTS	DATE EXTRACTED	DATE ANALYZED
TOTAL EXTRACTABLE HYDROCARBONS (OA-2/8015)				
RESULTS REPORTED IN mg/Kg OR PARTS PER MILLION(PPM)				
GASOLINE C6-C14	3.0	ND	02-10-00	02-11-00
MINERAL SPIRITS C7-C14	3.0	ND	02-10-00	02-11-00
KEROSENE C9-C16	3.0	ND	02-10-00	02-11-00
DIESEL C7-C26	3.0	ND	02-10-00	02-11-00
#6 FUEL OIL C10-C32	3.0	ND	02-10-00	02-11-00
HYDRAULIC FLUID C12-C33	3.0	ND	02-10-00	02-11-00
MOTOR OIL C16-C33	3.0	ND	02-10-00	02-11-00
MISCELLANEOUS (1)	3.0	235	02-10-00	02-11-00

QA/QC SURROGATE RECOVERY

P-TERPHENYL D14 I %

(1) = ANALYSIS SHOWS PEAKS WHICH CANNOT BE MATCHED TO ANY HYDROCARBON STANDARD LISTED ABOVE. THE PATTERN IS MOST SIMILAR TO HYDRAULIC FLUID AND WAS QUANTITATED FROM THAT STANDARD.
ND = NOT DETECTED ABOVE REPORTING LIMIT
* = OUTSIDE QC LIMIT
I = NOT QUANTIFIABLE DUE TO MATRIX INTERFERENCE

ATAS 875 Fee Fee Road • Maryland Heights, MO 63043 • (314) 434-4570 - FAX (314) 434-0080

CLIENT: DAMES & MOORE
721 EMERSON ROAD, SUITE 220
ST. LOUIS, MO 63141
ATTN: GEORGE JONES

REPORT: 2889901TP(720)

DATE : 02-14-00

SAMPLE MATRIX : SOIL
ATAS # : 28899.12
DATE SUBMITTED: 02-08-00
PROJECT : PENTAIR
SAMPLE ID : GP-5-3'

PARAMETER	REPORTING LIMIT	RESULTS	DATE EXTRACTED	DATE ANALYZED
TOTAL EXTRACTABLE HYDROCARBONS (OA-2/8015)				
RESULTS REPORTED IN mg/Kg OR PARTS PER MILLION(PPM)				
GASOLINE C6-C14	9.00	ND	02-10-00	02-11-00
MINERAL SPIRITS C7-C14	9.00	88.6	02-10-00	02-11-00
KEROSENE C9-C16	9.00	ND	02-10-00	02-11-00
DIESEL C7-C26	9.00	ND	02-10-00	02-11-00
#6 FUEL OIL C10-C32	60.0	ND	02-10-00	02-11-00
HYDRAULIC FLUID C12-C33	60.0	ND	02-10-00	02-11-00
MOTOR OIL C16-C33	60.0	ND	02-10-00	02-11-00
MISCELLANEOUS (1)	60.0	12100	02-10-00	02-11-00

QA/QC SURROGATE RECOVERY

P-TERPHENYL D14 D %

(1) = ANALYSIS SHOWS PEAKS WHICH CANNOT BE MATCHED TO ANY HYDROCARBON STANDARD LISTED ABOVE. THE PATTERN IS MOST SIMILAR TO THE MOTOR OIL AND WAS QUANTITATED FROM THAT STANDARD.
ND = NOT DETECTED ABOVE REPORTING LIMIT
* = OUTSIDE QC LIMIT
D = DILUTED OUT

ATAS 875 Fee Fee Road • Maryland Heights, MO 63043 • (314) 434-4570 - FAX (314) 434-0080

'ENT: DAMES & MOORE
721 EMERSON ROAD, SUITE 220
ST. LOUIS, MO 63141
ATTN: GEORGE JONES

REPORT: 2889901TP(720)

DATE : 02-14-00

SAMPLE MATRIX : SOIL
ATAS # : 28899.11
DATE SUBMITTED: 02-08-00
PROJECT : PENTAIR
SAMPLE ID : GP-4-10'

PARAMETER	REPORTING LIMIT	RESULTS	DATE EXTRACTED	DATE ANALYZED
TOTAL EXTRACTABLE HYDROCARBONS (OA-2/8015)				
RESULTS REPORTED IN mg/Kg OR PARTS PER MILLION(PPM)				
GASOLINE C6-C14	3.0	ND	02-10-00	02-11-00
MINERAL SPIRITS C7-C14	3.0	ND	02-10-00	02-11-00
KEROSENE C9-C16	3.0	ND	02-10-00	02-11-00
DIESEL C7-C26	3.0	ND	02-10-00	02-11-00
#6 FUEL OIL C10-C32	3.0	ND	02-10-00	02-11-00
'DRAULIC FLUID C12-C33	3.0	ND	02-10-00	02-11-00
FOR OIL C16-C33	3.0	ND	02-10-00	02-11-00

QA/QC SURROGATE RECOVERY

P-TERPHENYL D14 101 %

ND = NOT DETECTED ABOVE REPORTING LIMIT
* = OUTSIDE QC LIMIT
I = NOT QUANTIFIABLE DUE TO MATRIX INTERFERENCE

ATAS 875 Fee Fee Road • Maryland Heights, MO 63043 • (314) 434-4570 - FAX (314) 434-0080

C"ENT: DAMES & MOORE
721 EMERSON ROAD, SUITE 220
ST. LOUIS, MO 63141
ATTN: GEORGE JONES

REPORT: 2889901TP(720)

DATE : 02-14-00

SAMPLE MATRIX : SOIL
ATAS # : 28899.10
DATE SUBMITTED: 02-08-00
PROJECT : PENTAIR
SAMPLE ID : GP-4-3'

PARAMETER	REPORTING LIMIT	RESULTS	DATE EXTRACTED	DATE ANALYZED
TOTAL EXTRACTABLE HYDROCARBONS (OA-2/8015)				
RESULTS REPORTED IN mg/Kg OR PARTS PER MILLION (PPM)				
GASOLINE C6-C14	3.0	ND	02-10-00	02-11-00
MINERAL SPIRITS C7-C14	3.0	ND	02-10-00	02-11-00
KEROSENE C9-C16	3.0	ND	02-10-00	02-11-00
DIESEL C7-C26	3.0	ND	02-10-00	02-11-00
#6 FUEL OIL C10-C32	3.0	ND	02-10-00	02-11-00
HYDRAULIC FLUID C12-C33	3.0	ND	02-10-00	02-11-00
OR OIL C16-C33	3.0	ND	02-10-00	02-11-00

QA/QC SURROGATE RECOVERY

P-TERPHENYL D14 82 %

ND = NOT DETECTED ABOVE REPORTING LIMIT
* = OUTSIDE QC LIMIT
I = NOT QUANTIFIABLE DUE TO MATRIX INTERFERENCE

ATAS 875 Fee Fee Road • Maryland Heights, MO 63043 • (314) 434-4570 - FAX (314) 434-0080

CLIENT: DAMES & MOORE
721 EMERSON ROAD, SUITE 220
ST. LOUIS, MO 63141
ATTN: GEORGE JONES

REPORT: 2889901TP(720)

DATE : 02-14-00

SAMPLE MATRIX : SOIL
ATAS # : 28899.09
DATE SUBMITTED: 02-08-00
PROJECT : PENTAIR
SAMPLE ID : GP-3-7'

PARAMETER	REPORTING LIMIT	RESULTS	DATE EXTRACTED	DATE ANALYZED
TOTAL EXTRACTABLE HYDROCARBONS (OA-2/8015)				
RESULTS REPORTED IN mg/Kg OR PARTS PER MILLION(PPM)				
GASOLINE C6-C14	3.0	ND	02-10-00	02-10-00
MINERAL SPIRITS C7-C14	3.0	ND	02-10-00	02-10-00
KEROSENE C9-C16	3.0	ND	02-10-00	02-10-00
DIESEL C7-C26	3.0	ND	02-10-00	02-10-00
#6 FUEL OIL C10-C32	3.0	ND	02-10-00	02-10-00
HYDRAULIC FLUID C12-C33	3.0	ND	02-10-00	02-10-00
TOR OIL C16-C33	3.0	ND	02-10-00	02-10-00

QA/QC SURROGATE RECOVERY

P-TERPHENYL D14 100 %

ND = NOT DETECTED ABOVE REPORTING LIMIT
* = OUTSIDE QC LIMIT
I = NOT QUANTIFIABLE DUE TO MATRIX INTERFERENCE

ATAS 875 Fee Fee Road • Maryland Heights, MO 63043 • (314) 434-4570 - FAX (314) 434-0080

CLIENT: DAMES & MOORE
721 EMERSON ROAD, SUITE 220
ST. LOUIS, MO 63141
ATTN: GEORGE JONES

REPORT: 2889901TP(720)

DATE : 02-14-00

SAMPLE MATRIX : SOIL
ATAS # : 28899.08
DATE SUBMITTED: 02-08-00
PROJECT : PENTAIR
SAMPLE ID : GP-3-3'

PARAMETER	REPORTING LIMIT	RESULTS	DATE EXTRACTED	DATE ANALYZED
TOTAL EXTRACTABLE HYDROCARBONS (OA-2/8015)				
RESULTS REPORTED IN mg/Kg OR PARTS PER MILLION(PPM)				
GASOLINE C6-C14	3.0	ND	02-10-00	02-10-00
MINERAL SPIRITS C7-C14	3.0	ND	02-10-00	02-10-00
KEROSENE C9-C16	3.0	ND	02-10-00	02-10-00
DIESEL C7-C26	3.0	ND	02-10-00	02-10-00
#6 FUEL OIL C10-C32	3.0	ND	02-10-00	02-10-00
HYDRAULIC FLUID C12-C33	3.0	ND	02-10-00	02-10-00
MOTOR OIL C16-C33	3.0	ND	02-10-00	02-10-00
MISCELLANEOUS (1)	3.0	26.0	02-10-00	02-10-00

QA/QC SURROGATE RECOVERY

P-TERPHENYL D14 107 %

1 = ANALYSIS SHOWS PEAKS WHICH CANNOT BE MATCHED TO ANY HYDROCARBON STANDARD LISTED ABOVE. THE PATTERN IS MOST SIMILAR TO THE MOTOR OIL AND WAS QUANTITATED FROM THAT STANDARD.
ND = NOT DETECTED ABOVE REPORTING LIMIT
* = OUTSIDE QC LIMIT
I = NOT QUANTIFIABLE DUE TO MATRIX INTERFERENCE

ATAS 875 Fee Fee Road • Maryland Heights, MO 63043 • (314) 434-4570 - FAX (314) 434-0080

REPORT: 2889901TP(720)

DATE : 02-14-00

CLIENT: DAMES & MOORE
721 EMERSON ROAD, SUITE 220
ST. LOUIS, MO 63141
ATTN: GEORGE JONES

SAMPLE MATRIX : SOIL
ATAS # : 28899.04
DATE SUBMITTED: 02-08-00
PROJECT : PENTAIR
SAMPLE ID : GP-2-13'

PARAMETER	REPORTING LIMIT	RESULTS	DATE EXTRACTED	DATE ANALYZED
TOTAL EXTRACTABLE HYDROCARBONS (OA-2/8015)				
RESULTS REPORTED IN mg/Kg OR PARTS PER MILLION(PPM)				
GASOLINE C6-C14	3.0	ND	02-10-00	02-11-00
MINERAL SPIRITS C7-C14	3.0	ND	02-10-00	02-11-00
KEROSENE C9-C16	3.0	ND	02-10-00	02-11-00
DIESEL C7-C26	3.0	ND	02-10-00	02-11-00
#6 FUEL OIL C10-C32	3.0	ND	02-10-00	02-11-00
HYDRAULIC FLUID C12-C33	3.0	ND	02-10-00	02-11-00
MOTOR OIL C16-C33	3.0	ND	02-10-00	02-11-00

QA/QC SURROGATE RECOVERY

P-TERPHENYL D14 86 %

ND = NOT DETECTED ABOVE REPORTING LIMIT
* = OUTSIDE QC LIMIT
I = NOT QUANTIFIABLE DUE TO MATRIX INTERFERENCE

ATAS 875 Fee Fee Road • Maryland Heights, MO 63043 • (314) 434-4570 - FAX (314) 434-0080

CLIENT: DAMES & MOORE
721 EMERSON ROAD, SUITE 220
ST. LOUIS, MO 63141
ATTN: GEORGE JONES

REPORT: 2889901TP(720)
DATE : 02-14-00

SAMPLE MATRIX : SOIL
ATAS # : 28899.03
DATE SUBMITTED: 02-08-00
PROJECT : PENTAIR
SAMPLE ID : GP-2-10'

TOTAL EXTRACTABLE HYDROCARBONS (OA-2/8015)

RESULTS REPORTED IN mg/Kg OR PARTS PER MILLION(PPM)

PARAMETER	REPORTING LIMIT	RESULTS	DATE EXTRACTED	DATE ANALYZED
GASOLINE C6-C14	3.0	ND	02-10-00	02-11-00
MINERAL SPIRITS C7-C14	3.0	ND	02-10-00	02-11-00
KEROSENE C9-C16	3.0	ND	02-10-00	02-11-00
DIESEL C7-C26	3.0	ND	02-10-00	02-11-00
#6 FUEL OIL C10-C32	3.0	ND	02-10-00	02-11-00
HYDRAULIC FLUID C12-C33	3.0	ND	02-10-00	02-11-00
MOTOR OIL C16-C33	3.0	ND	02-10-00	02-11-00
MISCELLANEOUS (1)	3.0	6.29	02-10-00	02-11-00
MISCELLANEOUS (2)	3.0	127	02-10-00	02-11-00

QA/QC SURROGATE RECOVERY

P-TERPHENYL D14 I %

(1) = ANALYSIS SHOWS PEAKS WHICH CANNOT BE MATCHED TO ANY HYDROCARBON STANDARD LISTED ABOVE. THE PATTERN IS MOST SIMILAR TO MINERAL SPIRITS AND WAS QUANTITATED FROM THAT STANDARD.
= ANALYSIS SHOWS PEAKS WHICH CANNOT BE MATCHED TO ANY HYDROCARBON STANDARD LISTED ABOVE. THE PATTERN IS MOST SIMILAR TO THE MOTOR OIL AND WAS QUANTITATED FROM THAT STANDARD.
ND = NOT DETECTED ABOVE REPORTING LIMIT
* = OUTSIDE QC LIMIT
I = NOT QUANTIFIABLE DUE TO MATRIX INTERFERENCE

ATAS 875 Fee Fee Road • Maryland Heights, MO 63043 • (314) 434-4570 - FAX (314) 434-0080

C ENT: DAMES & MOORE
721 EMERSON ROAD, SUITE 220
ST. LOUIS, MO 63141
ATTN: GEORGE JONES

REPORT: 2889901TP(720)

DATE : 02-14-00

SAMPLE MATRIX : SOIL
ATAS # : 28899.02
DATE SUBMITTED: 02-08-00
PROJECT : PENTAIR
SAMPLE ID : GP-1-10'

PARAMETER	REPORTING LIMIT	RESULTS	DATE EXTRACTED	DATE ANALYZED
TOTAL EXTRACTABLE HYDROCARBONS (OA-2/8015)				
RESULTS REPORTED IN mg/Kg OR PARTS PER MILLION (PPM)				
GASOLINE C6-C14	3.0	ND	02-10-00	02-10-00
MINERAL SPIRITS C7-C14	3.0	ND	02-10-00	02-10-00
KEROSENE C9-C16	3.0	ND	02-10-00	02-10-00
DIESEL C7-C26	3.0	ND	02-10-00	02-10-00
#6 FUEL OIL C10-C32	3.0	ND	02-10-00	02-10-00
HYDRAULIC FLUID C12-C33	3.0	ND	02-10-00	02-10-00
LUBE OIL C16-C33	3.0	ND	02-10-00	02-10-00

QA/QC SURROGATE RECOVERY

P-TERPHENYL D14 71 %

ND = NOT DETECTED ABOVE REPORTING LIMIT
* = OUTSIDE QC LIMIT
I = NOT QUANTIFIABLE DUE TO MATRIX INTERFERENCE

ATAS 875 Fee Fee Road • Maryland Heights, MO 63043 • (314) 434-4570 - FAX (314) 434-0080

TENT: DAMES & MOORE
721 EMERSON ROAD, SUITE 220
ST. LOUIS, MO 63141
ATTN: GEORGE JONES

REPORT: 2889901TP(720)

DATE : 02-14-00

SAMPLE MATRIX : SOIL
ATAS # : 28899.01
DATE SUBMITTED: 02-08-00
PROJECT : PENTAIR
SAMPLE ID : GP-1-7'

PARAMETER	REPORTING LIMIT	RESULTS	DATE EXTRACTED	DATE ANALYZED
TOTAL EXTRACTABLE HYDROCARBONS (OA-2/8015)				
RESULTS REPORTED IN mg/Kg OR PARTS PER MILLION(PPM)				
GASOLINE C6-C14	3.0	ND	02-10-00	02-10-00
MINERAL SPIRITS C7-C14	3.0	ND	02-10-00	02-10-00
KEROSENE C9-C16	3.0	ND	02-10-00	02-10-00
DIESEL C7-C26	3.0	ND	02-10-00	02-10-00
#6 FUEL OIL C10-C32	3.0	ND	02-10-00	02-10-00
HYDRAULIC FLUID C12-C33	3.0	ND	02-10-00	02-10-00
FOR OIL C16-C33	3.0	ND	02-10-00	02-10-00

QA/QC SURROGATE RECOVERY

P-TERPHENYL D14 83 %

ND = NOT DETECTED ABOVE REPORTING LIMIT
* = OUTSIDE QC LIMIT
I = NOT QUANTIFIABLE DUE TO MATRIX INTERFERENCE

ATAS 875 Fee Fee Road • Maryland Heights, MO 63043 • (314) 434-4570 - FAX (314) 434-0080

REPORT: 2891201TP(720)

DATE : 02-15-00

CLIENT: DAMES & MOORE
721 EMERSON ROAD, SUITE 220
ST. LOUIS, MO 63141
ATTN: GEORGE JONES

SAMPLE MATRIX : SOIL
ATAS # : 28912.02
DATE SUBMITTED: 02-09-00
PROJECT : #27994-022-045 - PENTAIR
SAMPLE ID : MW-12-27'

PARAMETER	REPORTING LIMIT	RESULTS	DATE EXTRACTED	DATE ANALYZED
TOTAL EXTRACTABLE HYDROCARBONS (OA-2/8015)				
RESULTS REPORTED IN mg/Kg OR PARTS PER MILLION(PPM)				
GASOLINE C6-C14	3.0	ND	02-10-00	02-11-00
MINERAL SPIRITS C7-C14	3.0	ND	02-10-00	02-11-00
KEROSENE C9-C16	3.0	ND	02-10-00	02-11-00
DIESEL C7-C26	3.0	ND	02-10-00	02-11-00
#6 FUEL OIL C10-C32	3.0	ND	02-10-00	02-11-00
HYDRAULIC FLUID C12-C33	3.0	ND	02-10-00	02-11-00
MOTOR OIL C16-C33	3.0	ND	02-10-00	02-11-00

QA/QC SURROGATE RECOVERY

P-TERPHENYL D14 55 %

ND = NOT DETECTED ABOVE REPORTING LIMIT
* = OUTSIDE QC LIMIT
I = NOT QUANTIFIABLE DUE TO MATRIX INTERFERENCE

ATAS 875 Fee Fee Road • Maryland Heights, MO 63043 • (314) 434-4570 - FAX (314) 434-0080

IENT: DAMES & MOORE
721 EMERSON ROAD, SUITE 220
ST. LOUIS, MO 63141
ATTN: GEORGE JONES

REPORT: 2891201TP(720)
DATE : 02-15-00

SAMPLE MATRIX : SOIL
ATAS # : 28912.01
DATE SUBMITTED: 02-09-00
PROJECT : #27994-022-045 - PENTAIR
SAMPLE ID : MW-12-10'

PARAMETER	REPORTING LIMIT	RESULTS	DATE EXTRACTED	DATE ANALYZED
TOTAL EXTRACTABLE HYDROCARBONS (OA-2/8015)				
RESULTS REPORTED IN mg/Kg OR PARTS PER MILLION(PPM)				
GASOLINE C6-C14	3.0	ND	02-10-00	02-11-00
MINERAL SPIRITS C7-C14	3.0	ND	02-10-00	02-11-00
KEROSENE C9-C16	3.0	ND	02-10-00	02-11-00
DIESEL C7-C26	3.0	ND	02-10-00	02-11-00
#6 FUEL OIL C10-C32	3.0	ND	02-10-00	02-11-00
HYDRAULIC FLUID C12-C33	3.0	ND	02-10-00	02-11-00
MOTOR OIL C16-C33	3.0	ND	02-10-00	02-11-00

QA/QC SURROGATE RECOVERY

P-TERPHENYL D14 77 %

ND = NOT DETECTED ABOVE REPORTING LIMIT
* = OUTSIDE QC LIMIT
I = NOT QUANTIFIABLE DUE TO MATRIX INTERFERENCE

ATAS 875 Fee Fee Road • Maryland Heights, MO 63043 • (314) 434-4570 - FAX (314) 434-0080

IENT: DAMES & MOORE
721 EMERSON ROAD, SUITE 220
ST. LOUIS, MO 63141
ATTN: DAVID HEINZE

REPORT: 2836601TP(717)

DATE : 12-08-99

SAMPLE MATRIX : SOIL
ATAS # : 28366.01
DATE SUBMITTED: 11-29-99
PROJECT : PENTAIR
SAMPLE ID : MW-7(5')

PARAMETER	REPORTING LIMIT	RESULTS	DATE EXTRACTED	DATE ANALYZED
TOTAL EXTRACTABLE HYDROCARBONS (OA-2/8015)				
RESULTS REPORTED IN mg/Kg OR PARTS PER MILLION (PPM)				
GASOLINE C6-C14	3.0	ND	12-01-99	12-01-99
MINERAL SPIRITS C7-C14	3.0	ND	12-01-99	12-01-99
KEROSENE C9-C16	3.0	ND	12-01-99	12-01-99
DIESEL C7-C26	3.0	ND	12-01-99	12-01-99
#6 FUEL OIL C10-C32	3.0	ND	12-01-99	12-01-99
HYDRAULIC FLUID C12-C33	3.0	ND	12-01-99	12-01-99
MOTOR OIL C16-C33	3.0	ND	12-01-99	12-01-99

QA/QC SURROGATE RECOVERY

P-TERPHENYL D14 80 %

ND = NOT DETECTED ABOVE REPORTING LIMIT
* = OUTSIDE QC LIMIT
I = NOT QUANTIFIABLE DUE TO MATRIX INTERFERENCE

ATAS 875 Fee Fee Road • Maryland Heights, MO 63043 • (314) 434-4570 - FAX (314) 434-0080

CLIENT: DAMES & MOORE
721 EMERSON ROAD, SUITE 220
ST. LOUIS, MO 63141
ATTN: DAVID HEINZE

REPORT: 2834701TP(717)
DATE : 12-09-99

SAMPLE MATRIX : SOIL
ATAS # : 28347.02
DATE SUBMITTED: 11-23-99
PROJECT : PENTAIR
SAMPLE ID : MW-6(25')

PARAMETER	REPORTING LIMIT	RESULTS	DATE EXTRACTED	DATE ANALYZED
TOTAL EXTRACTABLE HYDROCARBONS (OA-2/8015)				
RESULTS REPORTED IN mg/Kg OR PARTS PER MILLION(PPM)				
GASOLINE C6-C14	3.0	ND	11-27-99	11-29-99
MINERAL SPIRITS C7-C14	3.0	ND	11-27-99	11-29-99
KEROSENE C9-C16	3.0	ND	11-27-99	11-29-99
DIESEL C7-C26	3.0	ND	11-27-99	11-29-99
#6 FUEL OIL C10-C32	3.0	ND	11-27-99	11-29-99
HYDRAULIC FLUID C12-C33	3.0	ND	11-27-99	11-29-99
MOTOR OIL C16-C33	3.0	ND	11-27-99	11-29-99

QA/QC SURROGATE RECOVERY

P-TERPHENYL D14 92 %

ND = NOT DETECTED ABOVE REPORTING LIMIT
* = OUTSIDE QC LIMIT
I = NOT QUANTIFIABLE DUE TO MATRIX INTERFERENCE

ATAS 875 Fee Fee Road • Maryland Heights, MO 63043 • (314) 434-4570 - FAX (314) 434-0080

CLIENT: DAMES & MOORE
721 EMERSON ROAD, SUITE 220
ST. LOUIS, MO 63141
ATTN: DAVID HEINZE

REPORT: 2834701TP(717)

DATE : 12-09-99

SAMPLE MATRIX : SOIL
ATAS # : 28347.01
DATE SUBMITTED: 11-23-99
PROJECT : PENTAIR
SAMPLE ID : MW-5(18')

PARAMETER	REPORTING LIMIT	RESULTS	DATE EXTRACTED	DATE ANALYZED
TOTAL EXTRACTABLE HYDROCARBONS (OA-2/8015)				
RESULTS REPORTED IN mg/Kg OR PARTS PER MILLION(PPM)				
GASOLINE C6-C14	3.0	ND	11-27-99	11-29-99
MINERAL SPIRITS C7-C14	3.0	ND	11-27-99	11-29-99
KEROSENE C9-C16	3.0	ND	11-27-99	11-29-99
DIESEL C7-C26	3.0	ND	11-27-99	11-29-99
#6 FUEL OIL C10-C32	3.0	ND	11-27-99	11-29-99
HYDRAULIC FLUID C12-C33	3.0	ND	11-27-99	11-29-99
MOTOR OIL C16-C33	3.0	ND	11-27-99	11-29-99

QA/QC SURROGATE RECOVERY

P-TERPHENYL D14 97 %

ND = NOT DETECTED ABOVE REPORTING LIMIT
* = OUTSIDE QC LIMIT
I = NOT QUANTIFIABLE DUE TO MATRIX INTERFERENCE

ATAS 875 Fee Fee Road • Maryland Heights, MO 63043 • (314) 434-4570 - FAX (314) 434-0080

C ENT: DAMES & MOORE
721 EMERSON ROAD, SUITE 220
ST. LOUIS, MO 63141
ATTN: DAVID HEINZE

REPORT: 2835601TP(717)

DATE : 12-08-99

SAMPLE MATRIX : SOIL
ATAS # : 28356.02
DATE SUBMITTED: 11-24-99
PROJECT : PENTAIR
SAMPLE ID : MW-4(6')

PARAMETER	REPORTING LIMIT	RESULTS	DATE EXTRACTED	DATE ANALYZED
TOTAL EXTRACTABLE HYDROCARBONS (OA-2/8015)				
RESULTS REPORTED IN mg/Kg OR PARTS PER MILLION(PPM)				
GASOLINE C6-C14	3.0	ND	12-01-99	12-01-99
MINERAL SPIRITS C7-C14	3.0	ND	12-01-99	12-01-99
KEROSENE C9-C16	3.0	ND	12-01-99	12-01-99
DIESEL C7-C26	3.0	ND	12-01-99	12-01-99
#6 FUEL OIL C10-C32	3.0	ND	12-01-99	12-01-99
HYDRAULIC FLUID C12-C33	3.0	ND	12-01-99	12-01-99
LUBRICATING OIL C16-C33	3.0	ND	12-01-99	12-01-99

QA/QC SURROGATE RECOVERY

P-TERPHENYL D14 86 %

ND = NOT DETECTED ABOVE REPORTING LIMIT
* = OUTSIDE QC LIMIT
I = NOT QUANTIFIABLE DUE TO MATRIX INTERFERENCE

ATAS 875 Fee Fee Road • Maryland Heights, MO 63043 • (314) 434-4570 - FAX (314) 434-0080

IENT: DAMES & MOORE
721 EMERSON ROAD, SUITE 220
ST. LOUIS, MO 63141
ATTN: DAVID HEINZE

REPORT: 2835601TP(717)

DATE : 12-08-99

SAMPLE MATRIX : SOIL
ATAS # : 28356.01
DATE SUBMITTED: 11-24-99
PROJECT : PENTAIR
SAMPLE ID : MW-3(8')

PARAMETER	REPORTING LIMIT	RESULTS	DATE EXTRACTED	DATE ANALYZED
TOTAL EXTRACTABLE HYDROCARBONS (QA-2/8015)				
RESULTS REPORTED IN mg/Kg OR PARTS PER MILLION(PPM)				
GASOLINE C6-C14	3.0	ND	12-01-99	12-01-99
MINERAL SPIRITS C7-C14	3.0	ND	12-01-99	12-01-99
KEROSENE C9-C16	3.0	ND	12-01-99	12-01-99
DIESEL C7-C26	3.0	ND	12-01-99	12-01-99
#6 FUEL OIL C10-C32	3.0	ND	12-01-99	12-01-99
HYDRAULIC FLUID C12-C33	3.0	ND	12-01-99	12-01-99
MOTOR OIL C16-C33	3.0	ND	12-01-99	12-01-99

QA/QC SURROGATE RECOVERY

P-TERPHENYL D14 92 %

ND = NOT DETECTED ABOVE REPORTING LIMIT
* = OUTSIDE QC LIMIT
I = NOT QUANTIFIABLE DUE TO MATRIX INTERFERENCE

ATAS 875 Fee Fee Road • Maryland Heights, MO 63043 • (314) 434-4570 - FAX (314) 434-0080

ENT: DAMES & MOORE
721 EMERSON ROAD, SUITE 220
ST. LOUIS, MO 63141
ATTN: DAVID HEINZE

REPORT: 2835601TP(717)
DATE : 12-08-99

SAMPLE MATRIX : SOIL
ATAS # : 28356.03
DATE SUBMITTED: 11-24-99
PROJECT : PENTAIR
SAMPLE ID : MW-2(17')

PARAMETER	REPORTING LIMIT	RESULTS	DATE EXTRACTED	DATE ANALYZED
TOTAL EXTRACTABLE HYDROCARBONS (OA-2/8015)				
RESULTS REPORTED IN mg/Kg OR PARTS PER MILLION (PPM)				
GASOLINE C6-C14	3.0	ND	12-01-99	12-01-99
MINERAL SPIRITS C7-C14	3.0	ND	12-01-99	12-01-99
KEROSENE C9-C16	3.0	ND	12-01-99	12-01-99
DIESEL C7-C26	3.0	ND	12-01-99	12-01-99
#6 FUEL OIL C10-C32	3.0	ND	12-01-99	12-01-99
DRAULIC FLUID C12-C33	3.0	ND	12-01-99	12-01-99
FOR OIL C16-C33	3.0	ND	12-01-99	12-01-99

QA/QC SURROGATE RECOVERY

P-TERPHENYL D14 89 %

ND = NOT DETECTED ABOVE REPORTING LIMIT
* = OUTSIDE QC LIMIT
I = NOT QUANTIFIABLE DUE TO MATRIX INTERFERENCE

ATAS 875 Fee Fee Road • Maryland Heights, MO 63043 • (314) 434-4570 - FAX (314) 434-0080

CLIENT: DAMES & MOORE
721 EMERSON ROAD, SUITE 220
ST. LOUIS, MO 63141
ATTN: DAVID HEINZE

REPORT: 2836601TP(717)

DATE : 12-08-99

SAMPLE MATRIX : SOIL
ATAS # : 28366.02
DATE SUBMITTED: 11-29-99
PROJECT : PENTAIR
SAMPLE ID : MW-1(5')

PARAMETER	REPORTING LIMIT	RESULTS	DATE EXTRACTED	DATE ANALYZED
TOTAL EXTRACTABLE HYDROCARBONS (OA-2/8015)				
RESULTS REPORTED IN mg/Kg OR PARTS PER MILLION(PPM)				
GASOLINE C6-C14	300	ND	12-01-99	12-02-99
MINERAL SPIRITS C7-C14	300	3830	12-01-99	12-02-99
KEROSENE C9-C16	300	ND	12-01-99	12-02-99
DIESEL C7-C26	300	ND	12-01-99	12-02-99
#6 FUEL OIL C10-C32	300	ND	12-01-99	12-02-99
HYDRAULIC FLUID C12-C33	300	ND	12-01-99	12-02-99
MOTOR OIL C16-C33	300	ND	12-01-99	12-02-99
MISCELLANEOUS (1)	300	35600	12-01-99	12-02-99

QA/QC SURROGATE RECOVERY

P-TERPHENYL D14 D %

(1) = ANALYSIS SHOWS PEAKS WHICH CANNOT BE MATCHED TO ANY HYDROCARBON STANDARD LISTED ABOVE. THE PATTERN IS MOST SIMILAR TO THE MOTOR OIL AND WAS QUANTITATED FROM THAT STANDARD.
ND = NOT DETECTED ABOVE REPORTING LIMIT
* = OUTSIDE QC LIMIT
D = DILUTED OUT

ATAS 875 Fee Fee Road • Maryland Heights, MO 63043 • (314) 434-4570 - FAX (314) 434-0080

CLIENT: DAMES & MOORE
721 EMERSON ROAD, SUITE 220
ST. LOUIS, MO 63141
ATTN: DAVID HEINZE

REPORT: 2835601VO(717)

DATE : 12-08-99

SAMPLE MATRIX : SOIL
ATAS # : METHOD BLANK
DATE SUBMITTED: 11-24-99
DATE ANALYZED : 11-30-99

METHOD REF.: SW846-8260B, EPA METHODOLOGY
PROJECT : PENTAIR
SAMPLE ID : METHOD BLANK

RESULTS REPORTED IN ug/Kg OR Parts Per Billion (PPB)

VOLATILES	R.L.	RESULTS	VOLATILES	R.L.	RESULTS
XYLENE (TOTAL)	5	ND	TOLUENE	5	ND
DICHLORODIFLUOROMETHANE	10	ND	trans-1,3-DICHLOROPROPENE	5	ND
CHLOROMETHANE	10	ND	1,1,2-TRICHLOROETHANE	5	ND
VINYL CHLORIDE	10	ND	TETRACHLOROETHENE	5	ND
BROMOMETHANE	10	ND	1,3-DICHLOROPROPANE	5	ND
CHLOROETHANE	10	ND	2-HEXANONE	10	ND
TRICHLOROFLUOROMETHANE	10	ND	DIBROMOCHLOROMETHANE	5	ND
1,1-DICHLOROETHENE	5	ND	1,2-DIBROMOETHANE	5	ND
ACETONE	10	ND	CHLOROBENZENE	5	ND
IODOMETHANE	10	ND	1,1,1,2-TETRACHLOROETHANE	5	ND
CARBON DISULFIDE	5	ND	ETHYLBENZENE	5	ND
METHYLENE CHLORIDE	5	6	STYRENE	5	ND
trans-1,2-DICHLOROETHENE	5	ND	BROMOFORM	5	ND
M TL TERT-BUTYL ETHER	10	ND	ISOPROPYLBENZENE	5	ND
1, DICHLOROETHANE	5	ND	1,1,2,2-TETRACHLOROETHANE	5	ND
VINYL ACETATE	10	ND	BROMOBENZENE	5	ND
2,2-DICHLOROPROPANE	5	ND	1,2,3-TRICHLOROPROPANE	5	ND
cis-1,2-DICHLOROETHENE	5	ND	n-PROPYLBENZENE	5	ND
2-BUTANONE	10	ND	2-CHLOROTOLUENE	5	ND
BROMOCHLOROMETHANE	5	ND	1,3,5-TRIMETHYLBENZENE	5	ND
CHLOROFORM	5	ND	4-CHLOROTOLUENE	5	ND
1,1,1-TRICHLOROETHANE	5	ND	TERT-BUTYLBENZENE	5	ND
CARBON TETRACHLORIDE	5	ND	1,2,4-TRIMETHYLBENZENE	5	ND
1,1-DICHLOROPROPENE	5	ND	sec-BUTYLBENZENE	5	ND
BENZENE	5	ND	1,3-DICHLOROBENZENE	5	ND
1,2-DICHLOROETHANE	5	ND	p-ISOPROPYLTOLUENE	5	ND
TRICHLOROETHENE	5	ND	1,4-DICHLOROBENZENE	5	ND
1,2-DICHLOROPROPANE	5	ND	n-BUTYLBENZENE	5	ND
DIBROMOMETHANE	5	ND	1,2-DICHLOROBENZENE	5	ND
BROMODICHLOROMETHANE	5	ND	1,2-DIBROMO-3-CHLOROPROPANE	5	ND
cis-1,3-DICHLOROPROPENE	5	ND	1,2,4-TRICHLOROBENZENE	5	ND
4-METHYL-2-PENTANONE	10	ND	HEXACHLOROBUTADIENE	5	ND
1,2,3-TRICHLOROBENZENE	5	ND	NAPHTHALENE	5	ND

QA/QC SURROGATE RECOVERIES

TOLUENE-d8(81-117) 101% BROMOFLUOROBENZENE(74-121) 102%
1,2-DICHLOROETHANE-D4(70-121) 84%

B = ANALYTE DETECTED IN METHOD BLANK, POSSIBLY BELOW THE REPORTING LIMIT.
ND = NOT DETECTED ABOVE REPORTING LIMIT
RL = REPORTING LIMIT; DEFINED AS THE PRACTICAL QUANTITATION LIMIT PLUS ANY DILUTION, POSITIVE VALUES BELOW THIS LIMIT WERE NOT REPORTED.

ATAS 875 Fee Fee Road • Maryland Heights, MO 63043 • (314) 434-4570 - FAX (314) 434-0080

I ORATORY QUALITY CONTROL SEQUENCE

SAMPLE MATRIX: SOIL
DATE ANALYZED: 11-30-99 and 12-01-99
METHOD REF. : SW846-8260B, EPA METHODOLOGY

REPORT DATE: 12-08-99

MATRIX SPIKE / MATRIX SPIKE DUPLICATE RECOVERY

COMPOUND	28356.01 MS % REC.	28356.01 MSD % REC.	RPD	QC RPD	ADVISORY LIMITS
1,1-DICHLOROETHENE	102	110	8	28	43-151
TRICHLOROETHENE	92	96	4	7	45-137
B. ZENE	104	104	0	12	57-143
TOLUENE	107	105	2	16	42-147
CHLOROBENZENE	99	99	0	7	58-133

* = VALUES OUTSIDE OF ADVISORY LIMITS

ATAS 875 Fee Fee Road • Maryland Heights, MO 63043 • (314) 434-4570 - FAX (314) 434-0080

L. RATORY QUALITY CONTROL SEQUENCE

METHOD: OA-2

LABORATORY BLANK

MATRIX : SOIL
EXTRACTION DATE: 12-01-99
ANALYSIS DATE : 12-01-99

DILUTION FACTOR: 1.0

COMPOUND	REPORTING LIMIT	UNIT	RESULTS
TOTAL EXTRACTABLE HYDROCARBONS			
GASOLINE	3.0	mg/Kg	ND
MINERAL SPIRITS	3.0	mg/Kg	ND
KEROSENE	3.0	mg/Kg	ND
DIESEL FUEL	3.0	mg/Kg	ND
#6 FUEL OIL	3.0	mg/Kg	ND
HYDRAULIC FLUID	3.0	mg/Kg	ND
MOTOR OIL	3.0	mg/Kg	ND

SURROGATE RECOVERY (P-TERPHENYL D14): 85 %

LABORATORY CONTROL SAMPLE / LABORATORY CONTROL SAMPLE DUPLICATE RESULTS

	LCS PERCENT RECOVERY	LCSD PERCENT RECOVERY	RELATIVE PERCENT DIFFERENCE
KEROSENE	75	73	3

ND = NOT DETECTED ABOVE REPORTING LIMIT

ATAS 875 Fee Fee Road • Maryland Heights, MO 63043 • (314) 434-4570 - FAX (314) 434-0080

CLIENT: DAMES & MOORE
721 EMERSON ROAD, SUITE 220
ST. LOUIS, MO 63141
ATTN: DAVID HEINZE

REPORT: 2836601MT(717)

DATE : 12-08-99

QA/QC

DESCRIPTION		PARAMETER	RESULTS	
METHOD BLANK	12-03-99	ARSENIC	<1.0	mg/Kg
METHOD BLANK	12-03-99	BARIUM	<0.4	mg/Kg
METHOD BLANK	12-03-99	CADMIUM	<0.2	mg/Kg
METHOD BLANK	12-03-99	CHROMIUM	<0.2	mg/Kg
METHOD BLANK	12-03-99	LEAD	<1.0	mg/Kg
METHOD BLANK	12-03-99	SILVER	<0.4	mg/Kg
METHOD BLANK	12-03-99	SELENIUM	<2.0	mg/Kg
METHOD BLANK	12-02-99	MERCURY	<0.2	mg/Kg
CONTROL SPIKE	12-03-99	ARSENIC	101 %	RECOVERY
CONTROL SPIKE	12-03-99	BARIUM	100 %	RECOVERY
CONTROL SPIKE	12-03-99	CADMIUM	95 %	RECOVERY
CONTROL SPIKE	12-03-99	CHROMIUM	97 %	RECOVERY
CONTROL SPIKE	12-03-99	LEAD	95 %	RECOVERY
CONTROL SPIKE	12-03-99	SILVER	94 %	RECOVERY
CONTROL SPIKE	12-03-99	SELENIUM	104 %	RECOVERY
CONTROL SPIKE	12-02-99	MERCURY	110 %	RECOVERY

ATAS 875 Fee Fee Road • Maryland Heights, MO 63043 • (314) 434-4570 - FAX (314) 434-0080

CLIENT: DAMES & MOORE
721 EMERSON ROAD, SUITE 220
ST. LOUIS, MO 63141
ATTN: DAVID HEINZE

REPORT: 2836601PC(717)
DATE : 12-08-99

SAMPLE MATRIX : SOIL
ATAS # : METHOD BLANK
DATE SUBMITTED: 11-29-99
DATE EXTRACTED: 11-30-99
DATE ANALYZED : 11-30-99
METHOD REF. : SW846-8082, EPA METHODOLOGY
PROJECT : PENTAIR
SAMPLE ID : METHOD BLANK

RESULTS REPORTED IN ug/Kg OR Parts Per Billion (PPB)

PCB'S	REPORTING LIMIT	RESULTS
AROCLOR 1016	10.0	ND
AROCLOR 1221	10.0	ND
AROCLOR 1232	10.0	ND
AROCLOR 1242	10.0	ND
AROCLOR 1248	10.0	ND
AROCLOR 1254	10.0	ND
AROCLOR 1260	10.0	ND
TOTAL PCBs		ND

QA/QC SURROGATE RECOVERY

DECACHLOROBIPHENYL(30-150)	108 %
TETRACHLORO-M-XYLENE(30-150)	88 %

ND = NOT DETECTED ABOVE REPORTING LIMIT

ATAS 875 Fee Fee Road • Maryland Heights, MO 63043 • (314) 434-4570 - FAX (314) 434-0080

LABORATORY QUALITY CONTROL SEQUENCE

SAMPLE MATRIX : SOIL
DATE EXTRACTED: 11-30-99
DATE ANALYZED : 11-30-99
METHOD REF. : SW846-8082, EPA METHODOLOGY

REPORT DATE: 12-08-99

LABORATORY CONTROL SAMPLE RECOVERY

COMPOUND	LCS PERCENT RECOVERY
AR1260	114 %

ATAS 875 Fee Fee Road • Maryland Heights, MO 63043 • (314) 434-4570 - FAX (314) 434-0080

CLIENT: DAMES & MOORE
721 EMERSON ROAD, SUITE 220
ST. LOUIS, MO 63141
ATTN: DAVID HEINZE

REPORT: 2836601VO(717)

DATE : 12-08-99

SAMPLE MATRIX : SOIL
ATAS # : METHOD BLANK
DATE SUBMITTED: 11-29-99
DATE ANALYZED : 11-30-99

METHOD REF.: SW846-8260B, EPA METHODOLOGY
PROJECT : PENTAIR
SAMPLE ID : METHOD BLANK

RESULTS REPORTED IN ug/Kg OR Parts Per Billion (PPB)

VOLATILES	R.L.	RESULTS	VOLATILES	R.L.	RESULTS
XYLENE (TOTAL)	5	ND	TOLUENE	5	ND
DICHLORODIFLUOROMETHANE	10	ND	trans-1,3-DICHLOROPROPENE	5	ND
CHLOROMETHANE	10	ND	1,1,2-TRICHLOROETHANE	5	ND
VINYL CHLORIDE	10	ND	TETRACHLOROETHENE	5	ND
BROMOMETHANE	10	ND	1,3-DICHLOROPROPANE	5	ND
CHLOROETHANE	10	ND	2-HEXANONE	10	ND
TRICHLOROFLUOROMETHANE	10	ND	DIBROMOCHLOROMETHANE	5	ND
1,1-DICHLOROETHENE	5	ND	1,2-DIBROMOETHANE	5	ND
ACETONE	10	ND	CHLOROBENZENE	5	ND
IODOMETHANE	10	ND	1,1,1,2-TETRACHLOROETHANE	5	ND
CARBON DISULFIDE	5	ND	ETHYLBENZENE	5	ND
METHYLENE CHLORIDE	5	6	STYRENE	5	ND
trans-1,2-DICHLOROETHENE	5	ND	BROMOFORM	5	ND
[illegible]YL TERT-BUTYL ETHER	10	ND	ISOPROPYLBENZENE	5	ND
1,[illegible]-DICHLOROETHANE	5	ND	1,1,2,2-TETRACHLOROETHANE	5	ND
VINYL ACETATE	10	ND	BROMOBENZENE	5	ND
2,2-DICHLOROPROPANE	5	ND	1,2,3-TRICHLOROPROPANE	5	ND
cis-1,2-DICHLOROETHENE	5	ND	n-PROPYLBENZENE	5	ND
2-BUTANONE	10	ND	2-CHLOROTOLUENE	5	ND
BROMOCHLOROMETHANE	5	ND	1,3,5-TRIMETHYLBENZENE	5	ND
CHLOROFORM	5	ND	4-CHLOROTOLUENE	5	ND
1,1,1-TRICHLOROETHANE	5	ND	TERT-BUTYLBENZENE	5	ND
CARBON TETRACHLORIDE	5	ND	1,2,4-TRIMETHYLBENZENE	5	ND
1,1-DICHLOROPROPENE	5	ND	sec-BUTYLBENZENE	5	ND
BENZENE	5	ND	1,3-DICHLOROBENZENE	5	ND
1,2-DICHLOROETHANE	5	ND	p-ISOPROPYLTOLUENE	5	ND
TRICHLOROETHENE	5	ND	1,4-DICHLOROBENZENE	5	ND
1,2-DICHLOROPROPANE	5	ND	n-BUTYLBENZENE	5	ND
DIBROMOMETHANE	5	ND	1,2-DICHLOROBENZENE	5	ND
BROMODICHLOROMETHANE	5	ND	1,2-DIBROMO-3-CHLOROPROPANE	5	ND
cis-1,3-DICHLOROPROPENE	5	ND	1,2,4-TRICHLOROBENZENE	5	ND
4-METHYL-2-PENTANONE	10	ND	HEXACHLOROBUTADIENE	5	ND
1,2,3-TRICHLOROBENZENE	5	ND	NAPHTHALENE	5	ND

QA/QC SURROGATE RECOVERIES

TOLUENE-d8(81-117) 101% BROMOFLUOROBENZENE(74-121) 102%
1,2-DICHLOROETHANE-D4(70-121) 84%

ND = NOT DETECTED ABOVE REPORTING LIMIT
RL = REPORTING LIMIT; DEFINED AS THE PRACTICAL QUANTITATION LIMIT PLUS ANY DILUTION, POSITIVE VALUES BELOW THIS LIMIT WERE NOT REPORTED.

ATAS 875 Fee Fee Road • Maryland Heights, MO 63043 • (314) 434-4570 - FAX (314) 434-0080

LABORATORY QUALITY CONTROL SEQUENCE

REPORT DATE: 12-08-99

SAMPLE MATRIX: SOIL
DATE ANALYZED: 11-30-99
METHOD REF. : SW846-8260B, EPA METHODOLOGY

LABORATORY CONTROL SAMPLE RECOVERY

COMPOUND	LCS % REC.
1,1-DICHLOROETHENE	98
TRICHLOROETHENE	90
BENZENE	98
TOLUENE	104
CHLOROBENZENE	100

* = VALUES OUTSIDE OF ADVISORY LIMITS

ATAS 875 Fee Fee Road • Maryland Heights, MO 63043 • (314) 434-4570 - FAX (314) 434-0080

CLIENT: DAMES & MOORE
721 EMERSON ROAD, SUITE 220
ST. LOUIS, MO 63141
ATTN: DAVID HEINZE

REPORT: 2836601VO(717)
DATE : 12-08-99

SAMPLE MATRIX : SOIL
ATAS # : METHOD BLANK
DATE SUBMITTED: 11-29-99
DATE ANALYZED : 12-02-99

METHOD REF.: SW846-8260B, EPA METHODOLOGY
PROJECT : PENTAIR
SAMPLE ID : METHOD BLANK

RESULTS REPORTED IN ug/Kg OR Parts Per Billion (PPB)

VOLATILES	R.L.	RESULTS	VOLATILES	R.L.	RESULTS
XYLENE (TOTAL)	500	ND	TOLUENE	500	ND
DICHLORODIFLUOROMETHANE	1000	ND	trans-1,3-DICHLOROPROPENE	500	ND
CHLOROMETHANE	1000	ND	1,1,2-TRICHLOROETHANE	500	ND
VINYL CHLORIDE	1000	ND	TETRACHLOROETHENE	500	ND
BROMOMETHANE	1000	ND	1,3-DICHLOROPROPANE	500	ND
CHLOROETHANE	1000	ND	2-HEXANONE	1000	ND
TRICHLOROFLUOROMETHANE	1000	ND	DIBROMOCHLOROMETHANE	500	ND
1,1-DICHLOROETHENE	500	ND	1,2-DIBROMOETHANE	500	ND
ACETONE	1000	ND	CHLOROBENZENE	500	ND
IODOMETHANE	1000	ND	1,1,1,2-TETRACHLOROETHANE	500	ND
CARBON DISULFIDE	500	ND	ETHYLBENZENE	500	ND
METHYLENE CHLORIDE	500	390 J	STYRENE	500	ND
trans-1,2-DICHLOROETHENE	500	ND	BROMOFORM	500	ND
M L TERT-BUTYL ETHER	1000	ND	ISOPROPYLBENZENE	500	ND
1,1 DICHLOROETHANE	500	ND	1,1,2,2-TETRACHLOROETHANE	500	ND
VINYL ACETATE	1000	ND	BROMOBENZENE	500	ND
2,2-DICHLOROPROPANE	500	ND	1,2,3-TRICHLOROPROPANE	500	ND
cis-1,2-DICHLOROETHENE	500	ND	n-PROPYLBENZENE	500	ND
2-BUTANONE	1000	ND	2-CHLOROTOLUENE	500	ND
BROMOCHLOROMETHANE	500	ND	1,3,5-TRIMETHYLBENZENE	500	ND
CHLOROFORM	500	ND	4-CHLOROTOLUENE	500	ND
1,1,1-TRICHLOROETHANE	500	ND	TERT-BUTYLBENZENE	500	ND
CARBON TETRACHLORIDE	500	ND	1,2,4-TRIMETHYLBENZENE	500	ND
1,1-DICHLOROPROPENE	500	ND	sec-BUTYLBENZENE	500	ND
BENZENE	500	ND	1,3-DICHLOROBENZENE	500	ND
1,2-DICHLOROETHANE	500	ND	p-ISOPROPYLTOLUENE	500	ND
TRICHLOROETHENE	500	ND	1,4-DICHLOROBENZENE	500	ND
1,2-DICHLOROPROPANE	500	ND	n-BUTYLBENZENE	500	ND
DIBROMOMETHANE	500	ND	1,2-DICHLOROBENZENE	500	ND
BROMODICHLOROMETHANE	500	ND	1,2-DIBROMO-3-CHLOROPROPANE	500	ND
cis-1,3-DICHLOROPROPENE	500	ND	1,2,4-TRICHLOROBENZENE	500	ND
4-METHYL-2-PENTANONE	1000	ND	HEXACHLOROBUTADIENE	500	ND
1,2,3-TRICHLOROBENZENE	500	ND	NAPHTHALENE	500	ND

QA/QC SURROGATE RECOVERIES

TOLUENE-d8(81-117) 103% BROMOFLUOROBENZENE(74-121) 112%
1,2-DICHLOROETHANE-D4(70-121) 77%

J = ESTIMATED VALUE; BELOW REPORTING LIMIT
ND = NOT DETECTED ABOVE REPORTING LIMIT
RL = REPORTING LIMIT; DEFINED AS THE PRACTICAL QUANTITATION LIMIT PLUS ANY DILUTION

ATAS 875 Fee Fee Road • Maryland Heights, MO 63043 • (314) 434-4570 - FAX (314) 434-0080

LABORATORY QUALITY CONTROL SEQUENCE

SAMPLE MATRIX: WATER
DATE ANALYZED: 12-02-99
METHOD REF. : SW846-8260B, EPA METHODOLOGY

REPORT DATE: 12-08-99

LABORATORY CONTROL SAMPLE / LABORATORY CONTROL SAMPLE DUPLICATE RECOVERY

COMPOUND	LCS % REC.	LCSD % REC.	RPD	QC RPD	ADVISORY LIMITS
1,1-DICHLOROETHENE	100	96	4	14	61-126
TRICHLOROETHENE	98	94	4	14	80-112
BI ENE	102	102	0	11	86-112
TOLUENE	108	106	2	13	90-116
CHLOROBENZENE	106	104	2	13	81-117

= VALUES OUTSIDE OF ADVISORY LIMITS

ATAS 875 Fee Fee Road • Maryland Heights, MO 63043 • (314) 434-4570 - FAX (314) 434-0080

LABORATORY QUALITY CONTROL SEQUENCE

METHOD: OA-2

LABORATORY BLANK

MATRIX : SOIL
EXTRACTION DATE: 12-01-99
ANALYSIS DATE : 12-01-99

DILUTION FACTOR: 1.0

COMPOUND	REPORTING LIMIT	UNIT	RESULTS
TOTAL EXTRACTABLE HYDROCARBONS			
GASOLINE	3.0	mg/Kg	ND
MINERAL SPIRITS	3.0	mg/Kg	ND
KEROSENE	3.0	mg/Kg	ND
DIESEL FUEL	3.0	mg/Kg	ND
#6 FUEL OIL	3.0	mg/Kg	ND
HYDRAULIC FLUID	3.0	mg/Kg	ND
MOTOR OIL	3.0	mg/Kg	ND

SURROGATE RECOVERY (P-TERPHENYL D14): 85 %

LABORATORY CONTROL SAMPLE / LABORATORY CONTROL SAMPLE DUPLICATE RESULTS

	LCS PERCENT RECOVERY	LCSD PERCENT RECOVERY	RELATIVE PERCENT DIFFERENCE
KEROSENE	75	73	3

ND = NOT DETECTED ABOVE REPORTING LIMIT

ATAS 875 Fee Fee Road • Maryland Heights, MO 63043 • (314) 434-4570 - FAX (314) 434-0080

CLIENT: DAMES & MOORE
721 EMERSON ROAD, SUITE 220
ST. LOUIS, MO 63141
ATTN: DAVID HEINZE

REPORT: 2835601MT(717)

DATE : 12-08-99

QA/QC

DESCRIPTION		PARAMETER	RESULTS	
METHOD BLANK	12-03-99	ARSENIC	<1.0	mg/Kg
METHOD BLANK	12-03-99	BARIUM	<0.4	mg/Kg
METHOD BLANK	12-03-99	CADMIUM	<0.2	mg/Kg
METHOD BLANK	12-03-99	CHROMIUM	<0.2	mg/Kg
METHOD BLANK	12-03-99	LEAD	<1.0	mg/Kg
METHOD BLANK	12-03-99	SILVER	<0.4	mg/Kg
METHOD BLANK	12-03-99	SELENIUM	<2.0	mg/Kg
METHOD BLANK	12-02-99	MERCURY	<0.2	mg/Kg
CONTROL SPIKE	12-03-99	ARSENIC	101 %	RECOVERY
CONTROL SPIKE	12-03-99	BARIUM	100 %	RECOVERY
CONTROL SPIKE	12-03-99	CADMIUM	95 %	RECOVERY
CONTROL SPIKE	12-03-99	CHROMIUM	97 %	RECOVERY
CONTROL SPIKE	12-03-99	LEAD	95 %	RECOVERY
CONTROL SPIKE	12-03-99	SILVER	94 %	RECOVERY
CONTROL SPIKE	12-03-99	SELENIUM	104 %	RECOVERY
CONTROL SPIKE	12-02-99	MERCURY	110 %	RECOVERY

ATAS 875 Fee Fee Road • Maryland Heights, MO 63043 • (314) 434-4570 - FAX (314) 434-0080

LABORATORY QUALITY CONTROL SEQUENCE

METHOD: OA-2

LABORATORY BLANK

MATRIX : SOIL
EXTRACTION DATE: 11-27-99
ANALYSIS DATE : 11-29-99

DILUTION FACTOR: 1.0

COMPOUND	REPORTING LIMIT	UNIT	RESULTS
TOTAL EXTRACTABLE HYDROCARBONS			
GASOLINE	3.0	mg/Kg	ND
MINERAL SPIRITS	3.0	mg/Kg	ND
KEROSENE	3.0	mg/Kg	ND
DIESEL FUEL	3.0	mg/Kg	ND
#6 FUEL OIL	3.0	mg/Kg	ND
HYDRAULIC FLUID	3.0	mg/Kg	ND
MOTOR OIL	3.0	mg/Kg	ND

SURROGATE RECOVERY (P-TERPHENYL D14): 94 %

LABORATORY CONTROL SAMPLE RESULTS

	LCS PERCENT RECOVERY
KEROSENE	73

ND = NOT DETECTED ABOVE REPORTING LIMIT

ATAS 875 Fee Fee Road • Maryland Heights, MO 63043 • (314) 434-4570 - FAX (314) 434-0080

CLIENT: DAMES & MOORE
721 EMERSON ROAD, SUITE 220
ST. LOUIS, MO 63141
ATTN: DAVID HEINZE

REPORT: 2834701VO(717)

DATE : 12-09-99

SAMPLE MATRIX : SOIL
ATAS # : METHOD BLANK
DATE SUBMITTED: 11-23-99
DATE ANALYZED : 11-29-99

METHOD REF.: SW846-8260B, EPA METHODOLOGY
PROJECT : PENTAIR
SAMPLE ID : METHOD BLANK

RESULTS REPORTED IN ug/Kg OR Parts Per Billion (PPB)

VOLATILES	R.L.	RESULTS	VOLATILES	R.L.	RESULTS
XYLENE (TOTAL)	5	ND	TOLUENE	5	ND
DICHLORODIFLUOROMETHANE	10	ND	trans-1,3-DICHLOROPROPENE	5	ND
CHLOROMETHANE	10	ND	1,1,2-TRICHLOROETHANE	5	ND
VINYL CHLORIDE	10	ND	TETRACHLOROETHENE	5	ND
BROMOMETHANE	10	ND	1,3-DICHLOROPROPANE	5	ND
CHLOROETHANE	10	ND	2-HEXANONE	10	ND
TRICHLOROFLUOROMETHANE	10	ND	DIBROMOCHLOROMETHANE	5	ND
1,1-DICHLOROETHENE	5	ND	1,2-DIBROMOETHANE	5	ND
ACETONE	10	ND	CHLOROBENZENE	5	ND
IODOMETHANE	10	ND	1,1,1,2-TETRACHLOROETHANE	5	ND
CARBON DISULFIDE	5	ND	ETHYLBENZENE	5	ND
METHYLENE CHLORIDE	5	12	STYRENE	5	ND
trans-1,2-DICHLOROETHENE	5	ND	BROMOFORM	5	ND
M[illegible]YL TERT-BUTYL ETHER	10	ND	ISOPROPYLBENZENE	5	ND
1[illegible]DICHLOROETHANE	5	ND	1,1,2,2-TETRACHLOROETHANE	5	ND
VINYL ACETATE	10	ND	BROMOBENZENE	5	ND
2,2-DICHLOROPROPANE	5	ND	1,2,3-TRICHLOROPROPANE	5	ND
cis-1,2-DICHLOROETHENE	5	ND	n-PROPYLBENZENE	5	ND
2-BUTANONE	10	ND	2-CHLOROTOLUENE	5	ND
BROMOCHLOROMETHANE	5	ND	1,3,5-TRIMETHYLBENZENE	5	ND
CHLOROFORM	5	ND	4-CHLOROTOLUENE	5	ND
1,1,1-TRICHLOROETHANE	5	ND	TERT-BUTYLBENZENE	5	ND
CARBON TETRACHLORIDE	5	ND	1,2,4-TRIMETHYLBENZENE	5	ND
1,1-DICHLOROPROPENE	5	ND	sec-BUTYLBENZENE	5	ND
BENZENE	5	ND	1,3-DICHLOROBENZENE	5	ND
1,2-DICHLOROETHANE	5	ND	p-ISOPROPYLTOLUENE	5	ND
TRICHLOROETHENE	5	ND	1,4-DICHLOROBENZENE	5	ND
1,2-DICHLOROPROPANE	5	ND	n-BUTYLBENZENE	5	ND
DIBROMOMETHANE	5	ND	1,2-DICHLOROBENZENE	5	ND
BROMODICHLOROMETHANE	5	ND	1,2-DIBROMO-3-CHLOROPROPANE	5	ND
cis-1,3-DICHLOROPROPENE	5	ND	1,2,4-TRICHLOROBENZENE	5	ND
4-METHYL-2-PENTANONE	10	ND	HEXACHLOROBUTADIENE	5	ND
1,2,3-TRICHLOROBENZENE	5	ND	NAPHTHALENE	5	ND

QA/QC SURROGATE RECOVERIES

TOLUENE-d8(81-117) 100% BROMOFLUOROBENZENE(74-121) 106%
1,2-DICHLOROETHANE-D4(70-121) 90%

ND = NOT DETECTED ABOVE REPORTING LIMIT
RL = REPORTING LIMIT; DEFINED AS THE PRACTICAL QUANTITATION LIMIT PLUS ANY DILUTION, POSITIVE VALUES BELOW THIS LIMIT WERE NOT REPORTED.

ATAS 875 Fee Fee Road • Maryland Heights, MO 63043 • (314) 434-4570 - FAX (314) 434-0080

ORATORY QUALITY CONTROL SEQUENCE

SAMPLE MATRIX: SOIL
DATE ANALYZED: 11-29-99
METHOD REF. : SW846-8260B, EPA METHODOLOGY

REPORT DATE: 12-09-99

MATRIX SPIKE / MATRIX SPIKE DUPLICATE RECOVERY

COMPOUND	28347.01 MS % REC.	28347.01 MSD % REC.	RPD	QC RPD	ADVISORY LIMITS
1,1-DICHLOROETHENE	68	65	5	28	43-151
TRICHLOROETHENE	87	84	4	7	45-137
BENZENE	91	86	6	12	57-143
TOLUENE	92	91	1	16	42-147
CHLOROBENZENE	94	92	2	7	58-133

* = VALUES OUTSIDE OF ADVISORY LIMITS

ATAS 875 Fee Fee Road • Maryland Heights, MO 63043 • (314) 434-4570 - FAX (314) 434-0080

CLIENT: DAMES & MOORE
721 EMERSON ROAD, SUITE 220
ST. LOUIS, MO 63141
ATTN: DAVID HEINZE

REPORT: 2834701MT(717)

DATE : 12-09-99

QA/QC

DESCRIPTION		PARAMETER	RESULTS	
METHOD BLANK	12-03-99	ARSENIC	<1.0	mg/Kg
METHOD BLANK	12-03-99	BARIUM	<0.4	mg/Kg
METHOD BLANK	12-03-99	CADMIUM	<0.2	mg/Kg
METHOD BLANK	12-03-99	CHROMIUM	<0.2	mg/Kg
METHOD BLANK	12-03-99	LEAD	<1.0	mg/Kg
METHOD BLANK	12-03-99	SILVER	<0.4	mg/Kg
METHOD BLANK	12-03-99	SELENIUM	<2.0	mg/Kg
METHOD BLANK	11-29-99	MERCURY	<0.2	mg/Kg
CONTROL SPIKE	12-03-99	ARSENIC	101 %	RECOVERY
CONTROL SPIKE	12-03-99	BARIUM	100 %	RECOVERY
CONTROL SPIKE	12-03-99	CADMIUM	95 %	RECOVERY
CONTROL SPIKE	12-03-99	CHROMIUM	97 %	RECOVERY
CONTROL SPIKE	12-03-99	LEAD	95 %	RECOVERY
CONTROL SPIKE	12-03-99	SILVER	94 %	RECOVERY
CONTROL SPIKE	12-03-99	SELENIUM	104 %	RECOVERY
CONTROL SPIKE	11-29-99	MERCURY	99 %	RECOVERY

ATAS 875 Fee Fee Road • Maryland Heights, MO 63043 • (314) 434-4570 - FAX (314) 434-0080

CLIENT: DAMES & MOORE
721 EMERSON ROAD, SUITE 220
ST. LOUIS, MO 63141
ATTN: DAVID HEINZE

REPORT: 28381MT(522)

DATE : 12-10-99

QA/QC

DESCRIPTION		PARAMETER	RESULTS	
METHOD BLANK	12-08-99	ARSENIC	<0.05	mg/L
METHOD BLANK	12-08-99	BARIUM	<0.02	mg/L
METHOD BLANK	12-08-99	CADMIUM	<0.01	mg/L
METHOD BLANK	12-08-99	CHROMIUM	<0.01	mg/L
METHOD BLANK	12-08-99	LEAD	<0.05	mg/L
METHOD BLANK	12-08-99	SILVER	<0.02	mg/L
METHOD BLANK	12-08-99	SELENIUM	<0.10	mg/L
METHOD BLANK	12-06-99	MERCURY	<0.0002	mg/L
CONTROL SPIKE	12-08-99	ARSENIC	94 %	RECOVERY
CONTROL SPIKE	12-08-99	BARIUM	98 %	RECOVERY
CONTROL SPIKE	12-08-99	CADMIUM	91 %	RECOVERY
CONTROL SPIKE	12-08-99	CHROMIUM	94 %	RECOVERY
CONTROL SPIKE	12-08-99	LEAD	92 %	RECOVERY
CONTROL SPIKE	12-08-99	SILVER	95 %	RECOVERY
CONTROL SPIKE	12-08-99	SELENIUM	99 %	RECOVERY
CONTROL SPIKE	12-06-99	MERCURY	113 %	RECOVERY

ATAS 875 Fee Fee Road • Maryland Heights, MO 63043 • (314) 434-4570 - FAX (314) 434-0080

LABORATORY QUALITY CONTROL SEQUENCE

M. .OD : OA-2

LABORATORY BLANK

MATRIX : WATER
EXTRACTION DATE : 12-01-99
ANALYSIS DATE : 12-01-99

DILUTION FACTOR: 1.0

COMPOUND	REPORTING LIMIT	UNIT	RESULTS
TOTAL EXTRACTABLE HYDROCARBONS			
MINERAL SPIRITS	0.100	mg/L	ND
KEROSENE	0.100	mg/L	ND
DIESEL FUEL	0.100	mg/L	ND
#6 FUEL OIL	0.100	mg/L	ND
HYDRAULIC FLUID	0.100	mg/L	ND
MOTOR OIL	0.100	mg/L	ND

SURROGATE RECOVERY (P-TERPHENYL D14): 47 %

L RATORY CONTROL SAMPLE / LABORATORY CONTROL SAMPLE BLANK DUPLICATE RESULTS

	LCS PERCENT RECOVERY	LCSD PERCENT RECOVERY	RELATIVE PERCENT DIFFERENCE
KEROSENE	54	49	10

N. . NOT DETECTED ABOVE REPORTING LIMIT

ATAS 875 Fee Fee Road • Maryland Heights, MO 63043 • (314) 434-4570 - FAX (314) 434-0080

CLIENT: DAMES & MOORE
721 EMERSON ROAD, SUITE 220
ST. LOUIS, MO 63141
ATTN: DAVID HEINZE

REPORT: 28381VOA(522)

DATE : 12-10-99

SAMPLE MATRIX : WATER
ATAS # : METHOD BLANK
DATE SUBMITTED: 11-30-99
DATE ANALYZED : 12-03-99

METHOD REF.: SW846-8260B/OA1, EPA METHODOLOGY
PROJECT # : PENTAIR
SAMPLE ID : METHOD BLANK

RESULTS REPORTED IN ug/L OR Parts Per Billion (PPB)

VOLATILES	R.L.	RESULTS	VOLATILES	R.L.	RESULTS
XYLENE (TOTAL)	5	ND	TOLUENE	5	ND
DICHLORODIFLUOROMETHANE	10	ND	trans-1,3-DICHLOROPROPENE	5	ND
CHLOROMETHANE	10	ND	1,1,2-TRICHLOROETHANE	5	ND
VINYL CHLORIDE	10	ND	TETRACHLOROETHENE	5	ND
BROMOMETHANE	10	ND	1,3-DICHLOROPROPANE	5	ND
CHLOROETHANE	10	ND	2-HEXANONE	10	ND
TRICHLOROFLUOROMETHANE	10	ND	DIBROMOCHLOROMETHANE	5	ND
1,1-DICHLOROETHENE	5	ND	1,2-DIBROMOETHANE	5	ND
ACETONE	10	ND	CHLOROBENZENE	5	ND
IODOMETHANE	10	ND	1,1,1,2-TETRACHLOROETHANE	5	ND
CARBON DISULFIDE	5	ND	ETHYLBENZENE	5	ND
METHYLENE CHLORIDE	5	ND	STYRENE	5	ND
t- 1-1,2-DICHLOROETHENE	5	ND	BROMOFORM	5	ND
M. /L TERT-BUTYL ETHER	10	ND	ISOPROPYLBENZENE	5	ND
1,1-DICHLOROETHANE	5	ND	1,1,2,2-TETRACHLOROETHANE	5	ND
VINYL ACETATE	10	ND	BROMOBENZENE	5	ND
2,2-DICHLOROPROPANE	5	ND	1,2,3-TRICHLOROPROPANE	5	ND
cis-1,2-DICHLOROETHENE	5	ND	n-PROPYLBENZENE	5	ND
2-BUTANONE	10	ND	2-CHLOROTOLUENE	5	ND
BROMOCHLOROMETHANE	5	ND	1,3,5-TRIMETHYLBENZENE	5	ND
CHLOROFORM	5	ND	4-CHLOROTOLUENE	5	ND
1,1,1-TRICHLOROETHANE	5	ND	TERT-BUTYLBENZENE	5	ND
CARBON TETRACHLORIDE	5	ND	1,2,4-TRIMETHYLBENZENE	5	ND
1,1-DICHLOROPROPENE	5	ND	sec-BUTYLBENZENE	5	ND
BENZENE	5	ND	1,3-DICHLOROBENZENE	5	ND
1,2-DICHLOROETHANE	5	ND	p-ISOPROPYLTOLUENE	5	ND
TRICHLOROETHENE	5	ND	1,4-DICHLOROBENZENE	5	ND
1,2-DICHLOROPROPANE	5	ND	n-BUTYLBENZENE	5	ND
DIBROMOMETHANE	5	ND	1,2-DICHLOROBENZENE	5	ND
BROMODICHLOROMETHANE	5	ND	1,2-DIBROMO-3-CHLOROPROPANE	5	ND
cis-1,3-DICHLOROPROPENE	5	ND	1,2,4-TRICHLOROBENZENE	5	ND
4-METHYL-2-PENTANONE	10	ND	HEXACHLOROBUTADIENE	5	ND
1,2,3-TRICHLOROBENZENE	5	ND	NAPHTHALENE	5	ND

QA/QC SURROGATE RECOVERIES

TOLUENE-d8(80-116) 100% BROMOFLUOROBENZENE(86-115) 103%
1,2-DICHLOROETHANE-D4(76-114) 91%

B = ANALYTE DETECTED IN METHOD BLANK, POSSIBLY BELOW THE REPORTING LIMIT.
ND = NOT DETECTED ABOVE REPORTING LIMIT
RL = REPORTING LIMIT; DEFINED AS THE PRACTICAL QUANTITATION LIMIT PLUS ANY DILUTION, POSITIVE VALUES BELOW THIS LIMIT WERE NOT REPORTED.

ATAS 875 Fee Fee Road • Maryland Heights, MO 63043 • (314) 434-4570 - FAX (314) 434-0080

L'ORATORY QUALITY CONTROL SEQUENCE

SAMPLE MATRIX: WATER
DATE ANALYZED: 12-03-99
METHOD REF. : SW846-8260B/OA1, EPA METHODOLOGY

REPORT DATE: 12-10-99

MATRIX SPIKE / MATRIX SPIKE DUPLICATE RECOVERY

COMPOUND	28381.03 MS % REC.	28381.03 MSD % REC.	RPD	QC RPD	ADVISORY LIMITS
1,1-DICHLOROETHENE	90	92	2	16	47-137
TRICHLOROETHENE	104	104	0	11	81-117
F ENE	102	102	0	12	81-118
TOLUENE	104	102	2	10	75-128
CHLOROBENZENE	106	104	2	8	85-115

* = VALUES OUTSIDE OF ADVISORY LIMITS

ATAS 875 Fee Fee Road • Maryland Heights, MO 63043 • (314) 434-4570 - FAX (314) 434-0080

CLIENT: DAMES & MOORE
721 EMERSON ROAD, SUITE 220
ST. LOUIS, MO 63141
ATTN: GEORGE JONES

REPORT: 2889901VO(720)

DATE : 02-14-00

SAMPLE MATRIX : SOIL
ATAS # : METHOD BLANK
DATE SUBMITTED: 02-08-00
DATE ANALYZED : 02-08-00

METHOD REF.: SW846-8260B, EPA METHODOLOGY
PROJECT : PENTAIR
SAMPLE ID : METHOD BLANK

RESULTS REPORTED IN ug/Kg OR Parts Per Billion (PPB)

VOLATILES	R.L.	RESULTS	VOLATILES	R.L.	RESULTS
XYLENE (TOTAL)	5	ND	TOLUENE	5	ND
DICHLORODIFLUOROMETHANE	10	ND	trans-1,3-DICHLOROPROPENE	5	ND
CHLOROMETHANE	10	ND	1,1,2-TRICHLOROETHANE	5	ND
VINYL CHLORIDE	10	ND	TETRACHLOROETHENE	5	ND
BROMOMETHANE	10	ND	1,3-DICHLOROPROPANE	5	ND
CHLOROETHANE	10	ND	2-HEXANONE	10	ND
TRICHLOROFLUOROMETHANE	10	ND	DIBROMOCHLOROMETHANE	5	ND
1,1-DICHLOROETHENE	5	ND	1,2-DIBROMOETHANE	5	ND
ACETONE	10	ND	CHLOROBENZENE	5	ND
IODOMETHANE	10	ND	1,1,1,2-TETRACHLOROETHANE	5	ND
CARBON DISULFIDE	5	ND	ETHYLBENZENE	5	ND
METHYLENE CHLORIDE	5	12	STYRENE	5	ND
trans-1,2-DICHLOROETHENE	5	ND	BROMOFORM	5	ND
[illegible]YL TERT-BUTYL ETHER	10	ND	ISOPROPYLBENZENE	5	ND
1,1-DICHLOROETHANE	5	ND	1,1,2,2-TETRACHLOROETHANE	5	ND
VINYL ACETATE	10	ND	BROMOBENZENE	5	ND
2,2-DICHLOROPROPANE	5	ND	1,2,3-TRICHLOROPROPANE	5	ND
cis-1,2-DICHLOROETHENE	5	ND	n-PROPYLBENZENE	5	ND
2-BUTANONE	10	ND	2-CHLOROTOLUENE	5	ND
BROMOCHLOROMETHANE	5	ND	1,3,5-TRIMETHYLBENZENE	5	ND
CHLOROFORM	5	ND	4-CHLOROTOLUENE	5	ND
1,1,1-TRICHLOROETHANE	5	ND	TERT-BUTYLBENZENE	5	ND
CARBON TETRACHLORIDE	5	ND	1,2,4-TRIMETHYLBENZENE	5	ND
1,1-DICHLOROPROPENE	5	ND	sec-BUTYLBENZENE	5	ND
BENZENE	5	ND	1,3-DICHLOROBENZENE	5	ND
1,2-DICHLOROETHANE	5	ND	p-ISOPROPYLTOLUENE	5	ND
TRICHLOROETHENE	5	ND	1,4-DICHLOROBENZENE	5	ND
1,2-DICHLOROPROPANE	5	ND	n-BUTYLBENZENE	5	ND
DIBROMOMETHANE	5	ND	1,2-DICHLOROBENZENE	5	ND
BROMODICHLOROMETHANE	5	ND	1,2-DIBROMO-3-CHLOROPROPANE	5	ND
cis-1,3-DICHLOROPROPENE	5	ND	1,2,4-TRICHLOROBENZENE	5	ND
4-METHYL-2-PENTANONE	10	ND	HEXACHLOROBUTADIENE	5	ND
1,2,3-TRICHLOROBENZENE	5	ND	NAPHTHALENE	5	ND

QA/QC SURROGATE RECOVERIES

TOLUENE-d8(81-117) 103% BROMOFLUOROBENZENE(74-121) 105%
1,2-DICHLOROETHANE-D4(70-121) 90%

ND = NOT DETECTED ABOVE REPORTING LIMIT
RL = REPORTING LIMIT; DEFINED AS THE PRACTICAL QUANTITATION LIMIT PLUS ANY DILUTION, POSITIVE VALUES BELOW THIS LIMIT WERE NOT REPORTED.

ATAS 875 Fee Fee Road • Maryland Heights, MO 63043 • (314) 434-4570 - FAX (314) 434-0080

L ORATORY QUALITY CONTROL SEQUENCE

REPORT DATE: 02-14-00

SAMPLE MATRIX: SOIL
DATE ANALYZED: 02-08-00
METHOD REF. : SW846-8260B, EPA METHODOLOGY

MATRIX SPIKE / MATRIX SPIKE DUPLICATE RECOVERY

COMPOUND	28899.01 MS % REC.	28899.01 MSD % REC.	RPD	QC RPD	ADVISORY LIMITS
1,1-DICHLOROETHENE	83	80	4	28	43-151
T CHLOROETHENE	98	95	3	7	45-137
BENZENE	98	95	3	12	57-143
TOLUENE	97	97	0	16	42-147
CHLOROBENZENE	95	92	3	7	58-133

* = VALUES OUTSIDE OF ADVISORY LIMITS

ATAS 875 Fee Fee Road • Maryland Heights, MO 63043 • (314) 434-4570 - FAX (314) 434-0080

I ORATORY QUALITY CONTROL SEQUENCE

SAMPLE MATRIX : SOLID
DATE EXTRACTED: 02-08-00
DATE ANALYZED : 02-10-00
METHOD REF. : SW846-8082, EPA METHODOLOGY

REPORT DATE: 02-14-00

LABORATORY CONTROL SAMPLE RECOVERY

COMPOUND	LCS PERCENT RECOVERY
AR1260	103 %

ATAS 875 Fee Fee Road • Maryland Heights, MO 63043 • (314) 434-4570 - FAX (314) 434-0080

C ENT: DAMES & MOORE
721 EMERSON ROAD, SUITE 220
ST. LOUIS, MO 63141
ATTN: GEORGE JONES

REPORT: 2889901PC(720)

DATE : 02-14-00

SAMPLE MATRIX : SOLID
ATAS # : METHOD BLANK
DATE SUBMITTED: 02-08-00
DATE EXTRACTED: 02-08-00
DATE ANALYZED : 02-10-00
METHOD REF. : SW846-8082, EPA METHODOLOGY
PROJECT : PENTAIR
SAMPLE ID : METHOD BLANK

RESULTS REPORTED IN ug/Kg OR Parts Per Billion (PPB)

PCB'S	REPORTING LIMIT	RESULTS
AROCLOR 1016	10.0	ND
AROCLOR 1221	10.0	ND
AROCLOR 1232	10.0	ND
AROCLOR 1242	10.0	ND
AROCLOR 1248	10.0	ND
AROCLOR 1254	10.0	ND
AROCLOR 1260	10.0	ND
TOTAL PCBs		ND

QA/QC SURROGATE RECOVERY

DECACHLOROBIPHENYL(30-150)	90 %
TETRACHLORO-M-XYLENE(30-150)	76 %

ND NOT DETECTED ABOVE REPORTING LIMIT

ATAS 875 Fee Fee Road • Maryland Heights, MO 63043 • (314) 434-4570 - FAX (314) 434-0080

LABORATORY QUALITY CONTROL SEQUENCE

METHOD: OA-2

LABORATORY BLANK

MATRIX : SOIL DILUTION FACTOR: 1.0
EXTRACTION DATE: 02-10-00
ANALYSIS DATE : 02-10-00

COMPOUND	REPORTING LIMIT	UNIT	RESULTS
TOTAL EXTRACTABLE HYDROCARBONS			
GASOLINE	3.0	mg/Kg	ND
MINERAL SPIRITS	3.0	mg/Kg	ND
KEROSENE	3.0	mg/Kg	ND
DIESEL FUEL	3.0	mg/Kg	ND
#6 FUEL OIL	3.0	mg/Kg	ND
HYDRAULIC FLUID	3.0	mg/Kg	ND
MOTOR OIL	3.0	mg/Kg	ND

SURROGATE RECOVERY (P-TERPHENYL D14): 81 %

MATRIX SPIKE / MATRIX SPIKE DUPLICATE RESULTS

EXTRACTION DATE: 02-10-00
ANALYSIS DATE : 02-10-00 and 02-11-00

	28899.09 MS PERCENT RECOVERY	28899.09 MSD PERCENT RECOVERY	RELATIVE PERCENT DIFFERENCE
KEROSENE	87	77	12

ND = NOT DETECTED ABOVE REPORTING LIMIT

ATAS 875 Fee Fee Road • Maryland Heights, MO 63043 • (314) 434-4570 - FAX (314) 434-0080

CLIENT: DAMES & MOORE
721 EMERSON ROAD, SUITE 220
ST. LOUIS, MO 63141
ATTN: GEORGE JONES

REPORT: 2889901MT(720)

DATE : 02-15-00

QA/QC

DESCRIPTION		PARAMETER	RESULTS	
METHOD BLANK	02-09-00	ARSENIC	<1.0	mg/Kg
METHOD BLANK	02-09-00	BARIUM	<0.40	mg/Kg
METHOD BLANK	02-09-00	CADMIUM	<0.20	mg/Kg
METHOD BLANK	02-09-00	CHROMIUM	<0.20	mg/Kg
METHOD BLANK	02-09-00	LEAD	<1.0	mg/Kg
METHOD BLANK	02-09-00	SILVER	<0.40	mg/Kg
METHOD BLANK	02-09-00	SELENIUM	<2.0	mg/Kg
METHOD BLANK	02-10-00	MERCURY	<0.20	mg/Kg
CONTROL SPIKE	02-09-00	ARSENIC	95 %	RECOVERY
CONTROL SPIKE	02-09-00	BARIUM	100 %	RECOVERY
CONTROL SPIKE	02-09-00	CADMIUM	92 %	RECOVERY
CONTROL SPIKE	02-09-00	CHROMIUM	102 %	RECOVERY
CONTROL SPIKE	02-09-00	LEAD	90 %	RECOVERY
CONTROL SPIKE	02-09-00	SILVER	96 %	RECOVERY
CONTROL SPIKE	02-09-00	SELENIUM	96 %	RECOVERY
CONTROL SPIKE	02-10-00	MERCURY	116 %	RECOVERY

ATAS 875 Fee Fee Road • Maryland Heights, MO 63043 • (314) 434-4570 - FAX (314) 434-0080

CLIENT: DAMES & MOORE
721 EMERSON ROAD, SUITE 220
ST. LOUIS, MO 63141
ATTN: GEORGE JONES

REPORT: 2891201VO(720)

DATE : 02-14-00

SAMPLE MATRIX : SOIL
ATAS # : METHOD BLANK
DATE SUBMITTED: 02-09-00
DATE ANALYZED : 02-09-00

METHOD REF.: SW846-8260B, EPA METHODOLOGY
PROJECT # : 27994-022-045 - PENTAIR
SAMPLE ID : METHOD BLANK

RESULTS REPORTED IN ug/Kg OR Parts Per Billion (PPB)

VOLATILES	R.L.	RESULTS	VOLATILES	R.L.	RESULTS
XYLENE (TOTAL)	5	ND	TOLUENE	5	ND
DICHLORODIFLUOROMETHANE	10	ND	trans-1,3-DICHLOROPROPENE	5	ND
CHLOROMETHANE	10	ND	1,1,2-TRICHLOROETHANE	5	ND
VINYL CHLORIDE	10	ND	TETRACHLOROETHENE	5	ND
BROMOMETHANE	10	ND	1,3-DICHLOROPROPANE	5	ND
CHLOROETHANE	10	ND	2-HEXANONE	10	ND
TRICHLOROFLUOROMETHANE	10	ND	DIBROMOCHLOROMETHANE	5	ND
1,1-DICHLOROETHENE	5	ND	1,2-DIBROMOETHANE	5	ND
ACETONE	10	ND	CHLOROBENZENE	5	ND
IODOMETHANE	10	ND	1,1,1,2-TETRACHLOROETHANE	5	ND
CARBON DISULFIDE	5	ND	ETHYLBENZENE	5	ND
METHYLENE CHLORIDE	5	7	STYRENE	5	ND
trans-1,2-DICHLOROETHENE	5	ND	BROMOFORM	5	ND
M YL TERT-BUTYL ETHER	10	ND	ISOPROPYLBENZENE	5	ND
1, DICHLOROETHANE	5	ND	1,1,2,2-TETRACHLOROETHANE	5	ND
VINYL ACETATE	10	ND	BROMOBENZENE	5	ND
2,2-DICHLOROPROPANE	5	ND	1,2,3-TRICHLOROPROPANE	5	ND
cis-1,2-DICHLOROETHENE	5	ND	n-PROPYLBENZENE	5	ND
2-BUTANONE	10	ND	2-CHLOROTOLUENE	5	ND
BROMOCHLOROMETHANE	5	ND	1,3,5-TRIMETHYLBENZENE	5	ND
CHLOROFORM	5	ND	4-CHLOROTOLUENE	5	ND
1,1,1-TRICHLOROETHANE	5	ND	TERT-BUTYLBENZENE	5	ND
CARBON TETRACHLORIDE	5	ND	1,2,4-TRIMETHYLBENZENE	5	ND
1,1-DICHLOROPROPENE	5	ND	sec-BUTYLBENZENE	5	ND
BENZENE	5	ND	1,3-DICHLOROBENZENE	5	ND
1,2-DICHLOROETHANE	5	ND	p-ISOPROPYLTOLUENE	5	ND
TRICHLOROETHENE	5	ND	1,4-DICHLOROBENZENE	5	ND
1,2-DICHLOROPROPANE	5	ND	n-BUTYLBENZENE	5	ND
DIBROMOMETHANE	5	ND	1,2-DICHLOROBENZENE	5	ND
BROMODICHLOROMETHANE	5	ND	1,2-DIBROMO-3-CHLOROPROPANE	5	ND
cis-1,3-DICHLOROPROPENE	5	ND	1,2,4-TRICHLOROBENZENE	5	ND
4-METHYL-2-PENTANONE	10	ND	HEXACHLOROBUTADIENE	5	ND
1,2,3-TRICHLOROBENZENE	5	ND	NAPHTHALENE	5	ND

QA/QC SURROGATE RECOVERIES

TOLUENE-d8(81-117) 106% BROMOFLUOROBENZENE(74-121) 107%
1,2-DICHLOROETHANE-D4(70-121) 92%

ND = NOT DETECTED ABOVE REPORTING LIMIT
RL = REPORTING LIMIT; DEFINED AS THE PRACTICAL QUANTITATION LIMIT PLUS ANY DILUTION, POSITIVE VALUES BELOW THIS LIMIT WERE NOT REPORTED.

ATAS 875 Fee Fee Road • Maryland Heights, MO 63043 • (314) 434-4570 - FAX (314) 434-0080

L ORATORY QUALITY CONTROL SEQUENCE

REPORT DATE: 02-14-00

SAMPLE MATRIX: SOIL
DATE ANALYZED: 02-09-00
METHOD REF. : SW846-8260B, EPA METHODOLOGY

MATRIX SPIKE / MATRIX SPIKE DUPLICATE RECOVERY

COMPOUND	28912.02 MS % REC.	28912.02 MSD % REC.	RPD	QC RPD	ADVISORY LIMITS
1,1-DICHLOROETHENE	77	77	0	28	43-151
T CHLOROETHENE	99	97	2	7	45-137
BENZENE	99	96	3	12	57-143
TOLUENE	102	99	3	16	42-147
CHLOROBENZENE	97	94	3	7	58-133

* = VALUES OUTSIDE OF ADVISORY LIMITS

ATAS 875 Fee Fee Road • Maryland Heights, MO 63043 • (314) 434-4570 - FAX (314) 434-0080

CLIENT: DAMES & MOORE
721 EMERSON ROAD, SUITE 220
ST. LOUIS, MO 63141
ATTN: GEORGE JONES

REPORT: 2891301VO(720)

DATE : 02-15-00

SAMPLE MATRIX : SOIL
ATAS # : METHOD BLANK
DATE SUBMITTED: 02-09-00
DATE ANALYZED : 02-10-00

METHOD REF.: SW846-8260B, EPA METHODOLOGY
PROJECT # : 27994-022-045 - PENTAIR
SAMPLE ID : METHOD BLANK

RESULTS REPORTED IN ug/Kg OR Parts Per Billion (PPB)

VOLATILES	R.L.	RESULTS	VOLATILES	R.L.	RESULTS
XYLENE (TOTAL)	500	ND	TOLUENE	500	ND
DICHLORODIFLUOROMETHANE	1000	ND	trans-1,3-DICHLOROPROPENE	500	ND
CHLOROMETHANE	1000	ND	1,1,2-TRICHLOROETHANE	500	ND
VINYL CHLORIDE	1000	ND	TETRACHLOROETHENE	500	ND
BROMOMETHANE	1000	ND	1,3-DICHLOROPROPANE	500	ND
CHLOROETHANE	1000	ND	2-HEXANONE	1000	ND
TRICHLOROFLUOROMETHANE	1000	ND	DIBROMOCHLOROMETHANE	500	ND
1,1-DICHLOROETHENE	500	ND	1,2-DIBROMOETHANE	500	ND
ACETONE	1000	ND	CHLOROBENZENE	500	ND
IODOMETHANE	1000	ND	1,1,1,2-TETRACHLOROETHANE	500	ND
CARBON DISULFIDE	500	ND	ETHYLBENZENE	500	ND
METHYLENE CHLORIDE	500	500	STYRENE	500	ND
tr s-1,2-DICHLOROETHENE	500	ND	BROMOFORM	500	ND
M L TERT-BUTYL ETHER	1000	ND	ISOPROPYLBENZENE	500	ND
1,1-DICHLOROETHANE	500	ND	1,1,2,2-TETRACHLOROETHANE	500	ND
VINYL ACETATE	1000	ND	BROMOBENZENE	500	ND
2,2-DICHLOROPROPANE	500	ND	1,2,3-TRICHLOROPROPANE	500	ND
cis-1,2-DICHLOROETHENE	500	ND	n-PROPYLBENZENE	500	ND
2-BUTANONE	1000	ND	2-CHLOROTOLUENE	500	ND
BROMOCHLOROMETHANE	500	ND	1,3,5-TRIMETHYLBENZENE	500	ND
CHLOROFORM	500	ND	4-CHLOROTOLUENE	500	ND
1,1,1-TRICHLOROETHANE	500	ND	TERT-BUTYLBENZENE	500	ND
CARBON TETRACHLORIDE	500	ND	1,2,4-TRIMETHYLBENZENE	500	ND
1,1-DICHLOROPROPENE	500	ND	sec-BUTYLBENZENE	500	ND
BENZENE	500	ND	1,3-DICHLOROBENZENE	500	ND
1,2-DICHLOROETHANE	500	ND	p-ISOPROPYLTOLUENE	500	ND
TRICHLOROETHENE	500	ND	1,4-DICHLOROBENZENE	500	ND
1,2-DICHLOROPROPANE	500	ND	n-BUTYLBENZENE	500	ND
DIBROMOMETHANE	500	ND	1,2-DICHLOROBENZENE	500	ND
BROMODICHLOROMETHANE	500	ND	1,2-DIBROMO-3-CHLOROPROPANE	500	ND
cis-1,3-DICHLOROPROPENE	500	ND	1,2,4-TRICHLOROBENZENE	500	ND
4-METHYL-2-PENTANONE	1000	ND	HEXACHLOROBUTADIENE	500	ND
1,2,3-TRICHLOROBENZENE	500	ND	NAPHTHALENE	500	220 J

QA/QC SURROGATE RECOVERIES

TOLUENE-d8 (81-117) 102% BROMOFLUOROBENZENE (74-121) 107%
1,2-DICHLOROETHANE-D4 (70-121) 85%

J = ESTIMATED VALUE; BELOW REPORTING LIMIT
ND = NOT DETECTED ABOVE REPORTING LIMIT
RL = REPORTING LIMIT; DEFINED AS THE PRACTICAL QUANTITATION LIMIT PLUS ANY DILUTION

ATAS 875 Fee Fee Road • Maryland Heights, MO 63043 • (314) 434-4570 - FAX (314) 434-0080

LABORATORY QUALITY CONTROL SEQUENCE

SAMPLE MATRIX: WATER
DATE ANALYZED: 02-09-00
METHOD REF. : SW846-8260B, EPA METHODOLOGY

REPORT DATE: 02-15-00

LABORATORY CONTROL SAMPLE / LABORATORY CONTROL SAMPLE DUPLICATE RECOVERY

COMPOUND	LCS % REC.	LCSD % REC.	RPD	QC RPD	ADVISORY LIMITS
1,1-DICHLOROETHENE	92	98	6	14	61-126
TRICHLOROETHENE	96	98	2	14	80-112
BE ENE	98	102	4	11	86-112
TOLUENE	102	108	6	13	90-116
CHLOROBENZENE	92	96	4	13	81-117

= VALUES OUTSIDE OF ADVISORY LIMITS

ATAS 875 Fee Fee Road • Maryland Heights, MO 63043 • (314) 434-4570 - FAX (314) 434-0080

CLIENT: DAMES & MOORE
721 EMERSON ROAD, SUITE 220
ST. LOUIS, MO 63141
ATTN: GEORGE JONES

REPORT: 2891301VO(720)

DATE : 02-15-00

SAMPLE MATRIX : SOIL
ATAS # : METHOD BLANK
DATE SUBMITTED: 02-09-00
DATE ANALYZED : 02-10-00

METHOD REF.: SW846-8260B, EPA METHODOLOGY
PROJECT # : 27994-022-045 - PENTAIR
SAMPLE ID : METHOD BLANK

RESULTS REPORTED IN ug/Kg OR Parts Per Billion (PPB)

VOLATILES	R.L.	RESULTS	VOLATILES	R.L.	RESULTS
XYLENE (TOTAL)	5	ND	TOLUENE	5	ND
DICHLORODIFLUOROMETHANE	10	ND	trans-1,3-DICHLOROPROPENE	5	ND
CHLOROMETHANE	10	ND	1,1,2-TRICHLOROETHANE	5	ND
VINYL CHLORIDE	10	ND	TETRACHLOROETHENE	5	ND
BROMOMETHANE	10	ND	1,3-DICHLOROPROPANE	5	ND
CHLOROETHANE	10	ND	2-HEXANONE	10	ND
TRICHLOROFLUOROMETHANE	10	ND	DIBROMOCHLOROMETHANE	5	ND
1,1-DICHLOROETHENE	5	ND	1,2-DIBROMOETHANE	5	ND
ACETONE	10	ND	CHLOROBENZENE	5	ND
IODOMETHANE	10	ND	1,1,1,2-TETRACHLOROETHANE	5	ND
CARBON DISULFIDE	5	ND	ETHYLBENZENE	5	ND
METHYLENE CHLORIDE	5	10	STYRENE	5	ND
trans-1,2-DICHLOROETHENE	5	ND	BROMOFORM	5	ND
MI L TERT-BUTYL ETHER	10	ND	ISOPROPYLBENZENE	5	ND
1, DICHLOROETHANE	5	ND	1,1,2,2-TETRACHLOROETHANE	5	ND
VINYL ACETATE	10	ND	BROMOBENZENE	5	ND
2,2-DICHLOROPROPANE	5	ND	1,2,3-TRICHLOROPROPANE	5	ND
cis-1,2-DICHLOROETHENE	5	ND	n-PROPYLBENZENE	5	ND
2-BUTANONE	10	ND	2-CHLOROTOLUENE	5	ND
BROMOCHLOROMETHANE	5	ND	1,3,5-TRIMETHYLBENZENE	5	ND
CHLOROFORM	5	ND	4-CHLOROTOLUENE	5	ND
1,1,1-TRICHLOROETHANE	5	ND	TERT-BUTYLBENZENE	5	ND
CARBON TETRACHLORIDE	5	ND	1,2,4-TRIMETHYLBENZENE	5	ND
1,1-DICHLOROPROPENE	5	ND	sec-BUTYLBENZENE	5	ND
BENZENE	5	ND	1,3-DICHLOROBENZENE	5	ND
1,2-DICHLOROETHANE	5	ND	p-ISOPROPYLTOLUENE	5	ND
TRICHLOROETHENE	5	ND	1,4-DICHLOROBENZENE	5	ND
1,2-DICHLOROPROPANE	5	ND	n-BUTYLBENZENE	5	ND
DIBROMOMETHANE	5	ND	1,2-DICHLOROBENZENE	5	ND
BROMODICHLOROMETHANE	5	ND	1,2-DIBROMO-3-CHLOROPROPANE	5	ND
cis-1,3-DICHLOROPROPENE	5	ND	1,2,4-TRICHLOROBENZENE	5	ND
4-METHYL-2-PENTANONE	10	ND	HEXACHLOROBUTADIENE	5	ND
1,2,3-TRICHLOROBENZENE	5	ND	NAPHTHALENE	5	ND

QA/QC SURROGATE RECOVERIES

TOLUENE-d8(81-117) 98% BROMOFLUOROBENZENE(74-121) 95%
1,2-DICHLOROETHANE-D4(70-121) 87%

ND = NOT DETECTED ABOVE REPORTING LIMIT
RL = REPORTING LIMIT; DEFINED AS THE PRACTICAL QUANTITATION LIMIT PLUS ANY DILUTION. POSITIVE VALUES BELOW THIS LIMIT WERE NOT REPORTED.

ATAS 875 Fee Fee Road • Maryland Heights, MO 63043 • (314) 434-4570 - FAX (314) 434-0080

LA_ ORATORY QUALITY CONTROL SEQUENCE

REPORT DATE: 02-15-00

SAMPLE MATRIX: SOIL
DATE ANALYZED: 02-10-00
METHOD REF. : SW846-8260B, EPA METHODOLOGY

LABORATORY CONTROL SAMPLE RECOVERY

COMPOUND	LCS % REC.
1,1-DICHLOROETHENE	108
T' HLOROETHENE	104
BENZENE	102
TOLUENE	106
CHLOROBENZENE	102

* = VALUES OUTSIDE OF ADVISORY LIMITS

ATAS 875 Fee Fee Road • Maryland Heights, MO 63043 • (314) 434-4570 - FAX (314) 434-0080

REPORT: 2891301VO(720)

CLIENT: DAMES & MOORE
721 EMERSON ROAD, SUITE 220
ST. LOUIS, MO 63141
ATTN: GEORGE JONES

DATE : 02-15-00

SAMPLE MATRIX : SOIL
ATAS # : METHOD BLANK
DATE SUBMITTED: 02-09-00
DATE ANALYZED : 02-09-00

METHOD REF.: SW846-8260B, EPA METHODOLOGY
PROJECT # : 27994-022-045 - PENTAIR
SAMPLE ID : METHOD BLANK

RESULTS REPORTED IN ug/Kg OR Parts Per Billion (PPB)

VOLATILES	R.L.	RESULTS
XYLENE (TOTAL)	5	ND
DICHLORODIFLUOROMETHANE	10	ND
CHLOROMETHANE	10	ND
VINYL CHLORIDE	10	ND
BROMOMETHANE	10	ND
CHLOROETHANE	10	ND
TRICHLOROFLUOROMETHANE	10	ND
1,1-DICHLOROETHENE	5	ND
ACETONE	10	ND
IODOMETHANE	10	ND
CARBON DISULFIDE	5	ND
METHYLENE CHLORIDE	5	7
tr ns-1,2-DICHLOROETHENE	5	ND
M ZL TERT-BUTYL ETHER	10	ND
1,1-DICHLOROETHANE	5	ND
VINYL ACETATE	10	ND
2,2-DICHLOROPROPANE	5	ND
cis-1,2-DICHLOROETHENE	5	ND
2-BUTANONE	10	ND
BROMOCHLOROMETHANE	5	ND
CHLOROFORM	5	ND
1,1,1-TRICHLOROETHANE	5	ND
CARBON TETRACHLORIDE	5	ND
1,1-DICHLOROPROPENE	5	ND
BENZENE	5	ND
1,2-DICHLOROETHANE	5	ND
TRICHLOROETHENE	5	ND
1,2-DICHLOROPROPANE	5	ND
DIBROMOMETHANE	5	ND
BROMODICHLOROMETHANE	5	ND
cis-1,3-DICHLOROPROPENE	5	ND
4-METHYL-2-PENTANONE	10	ND
1,2,3-TRICHLOROBENZENE	5	ND

VOLATILES	R.L.	RESULTS
TOLUENE	5	ND
trans-1,3-DICHLOROPROPENE	5	ND
1,1,2-TRICHLOROETHANE	5	ND
TETRACHLOROETHENE	5	ND
1,3-DICHLOROPROPANE	5	ND
2-HEXANONE	10	ND
DIBROMOCHLOROMETHANE	5	ND
1,2-DIBROMOETHANE	5	ND
CHLOROBENZENE	5	ND
1,1,1,2-TETRACHLOROETHANE	5	ND
ETHYLBENZENE	5	ND
STYRENE	5	ND
BROMOFORM	5	ND
ISOPROPYLBENZENE	5	ND
1,1,2,2-TETRACHLOROETHANE	5	ND
BROMOBENZENE	5	ND
1,2,3-TRICHLOROPROPANE	5	ND
n-PROPYLBENZENE	5	ND
2-CHLOROTOLUENE	5	ND
1,3,5-TRIMETHYLBENZENE	5	ND
4-CHLOROTOLUENE	5	ND
TERT-BUTYLBENZENE	5	ND
1,2,4-TRIMETHYLBENZENE	5	ND
sec-BUTYLBENZENE	5	ND
1,3-DICHLOROBENZENE	5	ND
p-ISOPROPYLTOLUENE	5	ND
1,4-DICHLOROBENZENE	5	ND
n-BUTYLBENZENE	5	ND
1,2-DICHLOROBENZENE	5	ND
1,2-DIBROMO-3-CHLOROPROPANE	5	ND
1,2,4-TRICHLOROBENZENE	5	ND
HEXACHLOROBUTADIENE	5	ND
NAPHTHALENE	5	ND

QA/QC SURROGATE RECOVERIES

TOLUENE-d8(81-117) 106% BROMOFLUOROBENZENE(74-121) 107%
1,2-DICHLOROETHANE-D4(70-121) 92%

ND = NOT DETECTED ABOVE REPORTING LIMIT
RL = REPORTING LIMIT; DEFINED AS THE PRACTICAL QUANTITATION LIMIT PLUS ANY DILUTION, POSITIVE VALUES BELOW THIS LIMIT WERE NOT REPORTED.

ATAS 875 Fee Fee Road • Maryland Heights, MO 63043 • (314) 434-4570 - FAX (314) 434-0080

ABORATORY QUALITY CONTROL SEQUENCE

REPORT DATE: 02-15-00

AMPLE MATRIX: SOIL
ATE ANALYZED: 02-09-00
ETHOD REF. : SW846-8260B, EPA METHODOLOGY

ABORATORY CONTROL SAMPLE RECOVERY

COMPOUND	LCS % REC.
1,1-DICHLOROETHENE	80
T HLOROETHENE	108
BENZENE	86
TOLUENE	108
CHLOROBENZENE	102

* = VALUES OUTSIDE OF ADVISORY LIMITS

ATAS 875 Fee Fee Road • Maryland Heights, MO 63043 • (314) 434-4570 - FAX (314) 434-0080

CLIENT: DAMES & MOORE
721 EMERSON ROAD, SUITE 220
ST. LOUIS, MO 63141
ATTN: GEORGE JONES

REPORT: 2891301VO(720)

DATE : 02-15-00

SAMPLE MATRIX : SOIL
ATAS # : METHOD BLANK
DATE SUBMITTED: 02-09-00
DATE ANALYZED : 02-10-00

METHOD REF.: SW846-8260B, EPA METHODOLOGY
PROJECT # : 27994-022-045 - PENTAIR
SAMPLE ID : METHOD BLANK

RESULTS REPORTED IN ug/Kg OR Parts Per Billion (PPB)

VOLATILES	R.L.	RESULTS	VOLATILES	R.L.	RESULTS
XYLENE (TOTAL)	500	ND	TOLUENE	500	ND
DICHLORODIFLUOROMETHANE	1000	ND	trans-1,3-DICHLOROPROPENE	500	ND
CHLOROMETHANE	1000	ND	1,1,2-TRICHLOROETHANE	500	ND
VINYL CHLORIDE	1000	ND	TETRACHLOROETHENE	500	ND
BROMOMETHANE	1000	ND	1,3-DICHLOROPROPANE	500	ND
CHLOROETHANE	1000	ND	2-HEXANONE	1000	ND
TRICHLOROFLUOROMETHANE	1000	ND	DIBROMOCHLOROMETHANE	500	ND
1,1-DICHLOROETHENE	500	ND	1,2-DIBROMOETHANE	500	ND
ACETONE	1000	ND	CHLOROBENZENE	500	ND
IODOMETHANE	1000	ND	1,1,1,2-TETRACHLOROETHANE	500	ND
CARBON DISULFIDE	500	ND	ETHYLBENZENE	500	ND
METHYLENE CHLORIDE	500	220 J	STYRENE	500	ND
trans-1,2-DICHLOROETHENE	500	ND	BROMOFORM	500	ND
M TL TERT-BUTYL ETHER	1000	ND	ISOPROPYLBENZENE	500	ND
1,1-DICHLOROETHANE	500	ND	1,1,2,2-TETRACHLOROETHANE	500	ND
VINYL ACETATE	1000	ND	BROMOBENZENE	500	ND
2,2-DICHLOROPROPANE	500	ND	1,2,3-TRICHLOROPROPANE	500	ND
cis-1,2-DICHLOROETHENE	500	ND	n-PROPYLBENZENE	500	ND
2-BUTANONE	1000	ND	2-CHLOROTOLUENE	500	ND
BROMOCHLOROMETHANE	500	ND	1,3,5-TRIMETHYLBENZENE	500	ND
CHLOROFORM	500	ND	4-CHLOROTOLUENE	500	ND
1,1,1-TRICHLOROETHANE	500	ND	TERT-BUTYLBENZENE	500	ND
CARBON TETRACHLORIDE	500	ND	1,2,4-TRIMETHYLBENZENE	500	ND
1,1-DICHLOROPROPENE	500	ND	sec-BUTYLBENZENE	500	ND
BENZENE	500	ND	1,3-DICHLOROBENZENE	500	ND
1,2-DICHLOROETHANE	500	ND	p-ISOPROPYLTOLUENE	500	ND
TRICHLOROETHENE	500	ND	1,4-DICHLOROBENZENE	500	ND
1,2-DICHLOROPROPANE	500	ND	n-BUTYLBENZENE	500	ND
DIBROMOMETHANE	500	ND	1,2-DICHLOROBENZENE	500	ND
BROMODICHLOROMETHANE	500	ND	1,2-DIBROMO-3-CHLOROPROPANE	500	ND
cis-1,3-DICHLOROPROPENE	500	ND	1,2,4-TRICHLOROBENZENE	500	ND
4-METHYL-2-PENTANONE	1000	ND	HEXACHLOROBUTADIENE	500	ND
1,2,3-TRICHLOROBENZENE	500	ND	NAPHTHALENE	500	ND

QA/QC SURROGATE RECOVERIES

TOLUENE-d8(81-117) 105% BROMOFLUOROBENZENE(74-121) 108%
1,2-DICHLOROETHANE-D4(70-121) 90%

J = ESTIMATED VALUE; BELOW REPORTING LIMIT
ND = NOT DETECTED ABOVE REPORTING LIMIT
RL = REPORTING LIMIT; DEFINED AS THE PRACTICAL QUANTITATION LIMIT PLUS ANY DILUTION

ATAS 875 Fee Fee Road • Maryland Heights, MO 63043 • (314) 434-4570 - FAX (314) 434-0080

LABORATORY QUALITY CONTROL SEQUENCE

SAMPLE MATRIX: WATER
DATE ANALYZED: 02-10-00
METHOD REF. : SW846-8260B, EPA METHODOLOGY

REPORT DATE: 02-15-00

LABORATORY CONTROL SAMPLE RECOVERY

COMPOUND	LCS % REC.
1,1-DICHLOROETHENE	90
TRICHLOROETHENE	94
[illegible]ZENE	104
TOLUENE	108
CHLOROBENZENE	94

* = VALUES OUTSIDE OF ADVISORY LIMITS

ATAS 875 Fee Fee Road • Maryland Heights, MO 63043 • (314) 434-4570 - FAX (314) 434-0080

CLIENT: DAMES & MOORE
721 EMERSON ROAD, SUITE 220
ST. LOUIS, MO 63141
ATTN: GEORGE JONES

REPORT: 2891301VO(720)

DATE : 02-15-00

SAMPLE MATRIX : SOIL
ATAS # : METHOD BLANK
DATE SUBMITTED: 02-09-00
DATE ANALYZED : 02-11-00

METHOD REF.: SW846-8260B, EPA METHODOLOGY
PROJECT # : 27994-022-045 - PENTAIR
SAMPLE ID : METHOD BLANK

RESULTS REPORTED IN ug/Kg OR Parts Per Billion (PPB)

VOLATILES	R.L.	RESULTS	VOLATILES	R.L.	RESULTS
XYLENE (TOTAL)	500	ND	TOLUENE	500	ND
DICHLORODIFLUOROMETHANE	1000	ND	trans-1,3-DICHLOROPROPENE	500	ND
CHLOROMETHANE	1000	ND	1,1,2-TRICHLOROETHANE	500	ND
VINYL CHLORIDE	1000	ND	TETRACHLOROETHENE	500	ND
BROMOMETHANE	1000	ND	1,3-DICHLOROPROPANE	500	ND
CHLOROETHANE	1000	ND	2-HEXANONE	1000	ND
TRICHLOROFLUOROMETHANE	1000	ND	DIBROMOCHLOROMETHANE	500	ND
1,1-DICHLOROETHENE	500	ND	1,2-DIBROMOETHANE	500	ND
ACETONE	1000	ND	CHLOROBENZENE	500	ND
IODOMETHANE	1000	ND	1,1,1,2-TETRACHLOROETHANE	500	ND
CARBON DISULFIDE	500	ND	ETHYLBENZENE	500	ND
METHYLENE CHLORIDE	500	130 J	STYRENE	500	ND
trans-1,2-DICHLOROETHENE	500	ND	BROMOFORM	500	ND
[illegible]YL TERT-BUTYL ETHER	1000	ND	ISOPROPYLBENZENE	500	ND
1,[illegible]-DICHLOROETHANE	500	ND	1,1,2,2-TETRACHLOROETHANE	500	ND
VINYL ACETATE	1000	ND	BROMOBENZENE	500	ND
2,2-DICHLOROPROPANE	500	ND	1,2,3-TRICHLOROPROPANE	500	ND
cis-1,2-DICHLOROETHENE	500	ND	n-PROPYLBENZENE	500	ND
2-BUTANONE	1000	ND	2-CHLOROTOLUENE	500	ND
BROMOCHLOROMETHANE	500	ND	1,3,5-TRIMETHYLBENZENE	500	ND
CHLOROFORM	500	ND	4-CHLOROTOLUENE	500	ND
1,1,1-TRICHLOROETHANE	500	ND	TERT-BUTYLBENZENE	500	ND
CARBON TETRACHLORIDE	500	ND	1,2,4-TRIMETHYLBENZENE	500	ND
1,1-DICHLOROPROPENE	500	ND	sec-BUTYLBENZENE	500	ND
BENZENE	500	ND	1,3-DICHLOROBENZENE	500	ND
1,2-DICHLOROETHANE	500	ND	p-ISOPROPYLTOLUENE	500	ND
TRICHLOROETHENE	500	ND	1,4-DICHLOROBENZENE	500	ND
1,2-DICHLOROPROPANE	500	ND	n-BUTYLBENZENE	500	ND
DIBROMOMETHANE	500	ND	1,2-DICHLOROBENZENE	500	ND
BROMODICHLOROMETHANE	500	ND	1,2-DIBROMO-3-CHLOROPROPANE	500	ND
cis-1,3-DICHLOROPROPENE	500	ND	1,2,4-TRICHLOROBENZENE	500	ND
4-METHYL-2-PENTANONE	1000	ND	HEXACHLOROBUTADIENE	500	ND
1,2,3-TRICHLOROBENZENE	500	ND	NAPHTHALENE	500	ND

QA/QC SURROGATE RECOVERIES

TOLUENE-d8(81-117) 100% BROMOFLUOROBENZENE(74-121) 109%
1,2-DICHLOROETHANE-D4(70-121) 92%

J = ESTIMATED VALUE; BELOW REPORTING LIMIT
ND = NOT DETECTED ABOVE REPORTING LIMIT
RL = REPORTING LIMIT; DEFINED AS THE PRACTICAL QUANTITATION LIMIT PLUS ANY DILUTION

ATAS 875 Fee Fee Road • Maryland Heights, MO 63043 • (314) 434-4570 - FAX (314) 434-0080

LABORATORY QUALITY CONTROL SEQUENCE

SAMPLE MATRIX: WATER
DATE ANALYZED: 02-11-00
METHOD REF. : SW846-8260B, EPA METHODOLOGY

REPORT DATE: 02-15-00

LABORATORY CONTROL SAMPLE RECOVERY

COMPOUND	LCS % REC.
1,1-DICHLOROETHENE	100
TRICHLOROETHENE	102
F ZENE	104
TOLUENE	114
CHLOROBENZENE	96

* = VALUES OUTSIDE OF ADVISORY LIMITS

ATAS 875 Fee Fee Road • Maryland Heights, MO 63043 • (314) 434-4570 - FAX (314) 434-0080

CLIENT: DAMES & MOORE
721 EMERSON ROAD, SUITE 220
ST. LOUIS, MO 63141
ATTN: GEORGE JONES

REPORT: 2893601MT(720)

DATE : 02-16-00

QA/QC

DESCRIPTION		PARAMETER	RESULTS	
METHOD BLANK	02-12-00	ARSENIC	<0.050	mg/L
METHOD BLANK	02-14-00	BARIUM	<0.020	mg/L
METHOD BLANK	02-14-00	CADMIUM	<0.005	mg/L
METHOD BLANK	02-14-00	CHROMIUM	<0.005	mg/L
METHOD BLANK	02-14-00	LEAD	<0.050	mg/L
METHOD BLANK	02-14-00	SILVER	<0.010	mg/L
METHOD BLANK	02-14-00	SELENIUM	<0.100	mg/L
METHOD BLANK	02-15-00	MERCURY	<0.0002	mg/L
CONTROL SPIKE	02-12-00	ARSENIC	106 %	RECOVERY
CONTROL SPIKE	02-14-00	BARIUM	98 %	RECOVERY
CONTROL SPIKE	02-14-00	CADMIUM	100 %	RECOVERY
CONTROL SPIKE	02-14-00	CHROMIUM	101 %	RECOVERY
CONTROL SPIKE	02-14-00	LEAD	100 %	RECOVERY
CONTROL SPIKE	02-14-00	SILVER	110 %	RECOVERY
CONTROL SPIKE	02-14-00	SELENIUM	102 %	RECOVERY
CONTROL SPIKE	02-15-00	MERCURY	107 %	RECOVERY

ATAS 875 Fee Fee Road • Maryland Heights, MO 63043 • (314) 434-4570 - FAX (314) 434-0080

L ORATORY QUALITY CONTROL SEQUENCE

METHOD: OA-2

LABORATORY BLANK

MATRIX : WATER
EXTRACTION DATE: 02-11-00
ANALYSIS DATE : 02-12-00

DILUTION FACTOR: 1.0

COMPOUND	REPORTING LIMIT	UNIT	RESULTS
TOTAL EXTRACTABLE HYDROCARBONS			
GASOLINE	0.100	mg/L	ND
MINERAL SPIRITS	0.100	mg/L	ND
KEROSENE	0.100	mg/L	ND
DIESEL FUEL	0.100	mg/L	ND
#6 FUEL OIL	0.100	mg/L	ND
HYDRAULIC FLUID	0.100	mg/L	ND
MOTOR OIL	0.100	mg/L	ND

SURROGATE RECOVERY (P-TERPHENYL D14): 64 %

LABORATORY CONTROL SAMPLE / LABORATORY CONTROL SAMPLE DUPLICATE RESULTS

	LCS PERCENT RECOVERY	LCSD PERCENT RECOVERY	RELATIVE PERCENT DIFFERENCE
KEROSENE	78	74	5

ND = NOT DETECTED ABOVE REPORTING LIMIT

ATAS 875 Fee Fee Road • Maryland Heights, MO 63043 • (314) 434-4570 - FAX (314) 434-0080

C"ENT: DAMES & MOORE
721 EMERSON ROAD, SUITE 220
ST. LOUIS, MO 63141
ATTN: GEORGE JONES

REPORT: 2893601VO(720)

DATE : 02-16-00

SAMPLE MATRIX : WATER
ATAS # : METHOD BLANK
DATE SUBMITTED: 02-10-00
DATE ANALYZED : 02-11-00

METHOD REF.: SW846-8260B, EPA METHODOLOGY
PROJECT # : 27994-022-045 - PENTAIR
SAMPLE ID : METHOD BLANK

RESULTS REPORTED IN ug/L OR Parts Per Billion (PPB)

VOLATILES	R.L.	RESULTS	VOLATILES	R.L.	RESULTS
XYLENE (TOTAL)	5	ND	TOLUENE	5	ND
DICHLORODIFLUOROMETHANE	10	ND	trans-1,3-DICHLOROPROPENE	5	ND
CHLOROMETHANE	10	ND	1,1,2-TRICHLOROETHANE	5	ND
VINYL CHLORIDE	10	ND	TETRACHLOROETHENE	5	ND
BROMOMETHANE	10	ND	1,3-DICHLOROPROPANE	5	ND
CHLOROETHANE	10	ND	2-HEXANONE	10	ND
TRICHLOROFLUOROMETHANE	10	ND	DIBROMOCHLOROMETHANE	5	ND
1,1-DICHLOROETHENE	5	ND	1,2-DIBROMOETHANE	5	ND
ACETONE	10	ND	CHLOROBENZENE	5	ND
IODOMETHANE	10	ND	1,1,1,2-TETRACHLOROETHANE	5	ND
CARBON DISULFIDE	5	ND	ETHYLBENZENE	5	ND
M"THYLENE CHLORIDE	5	ND	STYRENE	5	ND
t s-1,2-DICHLOROETHENE	5	ND	BROMOFORM	5	ND
M.THYL TERT-BUTYL ETHER	10	ND	ISOPROPYLBENZENE	5	ND
1,1-DICHLOROETHANE	5	ND	1,1,2,2-TETRACHLOROETHANE	5	ND
VINYL ACETATE	10	ND	BROMOBENZENE	5	ND
2,2-DICHLOROPROPANE	5	ND	1,2,3-TRICHLOROPROPANE	5	ND
cis-1,2-DICHLOROETHENE	5	ND	n-PROPYLBENZENE	5	ND
2-BUTANONE	10	ND	2-CHLOROTOLUENE	5	ND
BROMOCHLOROMETHANE	5	ND	1,3,5-TRIMETHYLBENZENE	5	ND
CHLOROFORM	5	ND	4-CHLOROTOLUENE	5	ND
1,1,1-TRICHLOROETHANE	5	ND	TERT-BUTYLBENZENE	5	ND
CARBON TETRACHLORIDE	5	ND	1,2,4-TRIMETHYLBENZENE	5	ND
1,1-DICHLOROPROPENE	5	ND	sec-BUTYLBENZENE	5	ND
BENZENE	5	ND	1,3-DICHLOROBENZENE	5	ND
1,2-DICHLOROETHANE	5	ND	p-ISOPROPYLTOLUENE	5	ND
TRICHLOROETHENE	5	ND	1,4-DICHLOROBENZENE	5	ND
1,2-DICHLOROPROPANE	5	ND	n-BUTYLBENZENE	5	ND
DIBROMOMETHANE	5	ND	1,2-DICHLOROBENZENE	5	ND
BROMODICHLOROMETHANE	5	ND	1,2-DIBROMO-3-CHLOROPROPANE	5	ND
cis-1,3-DICHLOROPROPENE	5	ND	1,2,4-TRICHLOROBENZENE	5	ND
4-METHYL-2-PENTANONE	10	ND	HEXACHLOROBUTADIENE	5	ND
1,2,3-TRICHLOROBENZENE	5	ND	NAPHTHALENE	5	ND

QA/QC SURROGATE RECOVERIES

TOLUENE-d8(80-116) 104% BROMOFLUOROBENZENE(86-115) 110%
1,2-DICHLOROETHANE-D4(76-114) 82%

ND = NOT DETECTED ABOVE REPORTING LIMIT
RL = REPORTING LIMIT; DEFINED AS THE PRACTICAL QUANTITATION LIMIT PLUS ANY DILUTION, POSITIVE VALUES BELOW THIS LIMIT WERE NOT REPORTED.

ATAS 875 Fee Fee Road • Maryland Heights, MO 63043 • (314) 434-4570 - FAX (314) 434-0080

L RATORY QUALITY CONTROL SEQUENCE

REPORT DATE: 02-16-00

SAMPLE MATRIX: WATER
DATE ANALYZED: 02-11-00
METHOD REF. : SW846-8260B, EPA METHODOLOGY

MATRIX SPIKE / MATRIX SPIKE DUPLICATE RECOVERY

COMPOUND	28936.08 MS % REC.	28936.08 MSD % REC.	RPD	QC RPD	ADVISORY LIMITS
1,1-DICHLOROETHENE	100	98	2	16	47-137
TRICHLOROETHENE	106	104	2	11	81-117
B. ENE	110	106	4	12	81-118
TOLUENE	114	110	4	10	75-128
CHLOROBENZENE	100	96	4	8	85-115

* = VALUES OUTSIDE OF ADVISORY LIMITS

ATAS 875 Fee Fee Road • Maryland Heights, MO 63043 • (314) 434-4570 - FAX (314) 434-0080

CLIENT: DAMES & MOORE
721 EMERSON ROAD, SUITE 220
ST. LOUIS, MO 63141
ATTN: GEORGE JONES

REPORT: 2893601VO(720)
DATE : 02-16-00

SAMPLE MATRIX : WATER
ATAS # : METHOD BLANK
DATE SUBMITTED: 02-10-00
DATE ANALYZED : 02-12-00

METHOD REF.: SW846-8260B, EPA METHODOLOGY
PROJECT # : 27994-022-045 - PENTAIR
SAMPLE ID : METHOD BLANK

RESULTS REPORTED IN ug/L OR Parts Per Billion (PPB)

VOLATILES	R.L.	RESULTS	VOLATILES	R.L.	RESULTS
XYLENE (TOTAL)	5	ND	TOLUENE	5	ND
DICHLORODIFLUOROMETHANE	10	ND	trans-1,3-DICHLOROPROPENE	5	ND
CHLOROMETHANE	10	ND	1,1,2-TRICHLOROETHANE	5	ND
VINYL CHLORIDE	10	ND	TETRACHLOROETHENE	5	ND
BROMOMETHANE	10	ND	1,3-DICHLOROPROPANE	5	ND
CHLOROETHANE	10	ND	2-HEXANONE	10	ND
TRICHLOROFLUOROMETHANE	10	ND	DIBROMOCHLOROMETHANE	5	ND
1,1-DICHLOROETHENE	5	ND	1,2-DIBROMOETHANE	5	ND
ACETONE	10	ND	CHLOROBENZENE	5	ND
IODOMETHANE	10	ND	1,1,1,2-TETRACHLOROETHANE	5	ND
CARBON DISULFIDE	5	ND	ETHYLBENZENE	5	ND
METHYLENE CHLORIDE	5	ND	STYRENE	5	ND
t s-1,2-DICHLOROETHENE	5	ND	BROMOFORM	5	ND
k .YL TERT-BUTYL ETHER	10	ND	ISOPROPYLBENZENE	5	ND
1,1-DICHLOROETHANE	5	ND	1,1,2,2-TETRACHLOROETHANE	5	ND
VINYL ACETATE	10	ND	BROMOBENZENE	5	ND
2,2-DICHLOROPROPANE	5	ND	1,2,3-TRICHLOROPROPANE	5	ND
cis-1,2-DICHLOROETHENE	5	ND	n-PROPYLBENZENE	5	ND
2-BUTANONE	10	ND	2-CHLOROTOLUENE	5	ND
BROMOCHLOROMETHANE	5	ND	1,3,5-TRIMETHYLBENZENE	5	ND
CHLOROFORM	5	ND	4-CHLOROTOLUENE	5	ND
1,1,1-TRICHLOROETHANE	5	ND	TERT-BUTYLBENZENE	5	ND
CARBON TETRACHLORIDE	5	ND	1,2,4-TRIMETHYLBENZENE	5	ND
1,1-DICHLOROPROPENE	5	ND	sec-BUTYLBENZENE	5	ND
BENZENE	5	ND	1,3-DICHLOROBENZENE	5	ND
1,2-DICHLOROETHANE	5	ND	p-ISOPROPYLTOLUENE	5	ND
TRICHLOROETHENE	5	ND	1,4-DICHLOROBENZENE	5	ND
1,2-DICHLOROPROPANE	5	ND	n-BUTYLBENZENE	5	ND
DIBROMOMETHANE	5	ND	1,2-DICHLOROBENZENE	5	ND
BROMODICHLOROMETHANE	5	ND	1,2-DIBROMO-3-CHLOROPROPANE	5	ND
cis-1,3-DICHLOROPROPENE	5	ND	1,2,4-TRICHLOROBENZENE	5	ND
4-METHYL-2-PENTANONE	10	ND	HEXACHLOROBUTADIENE	5	ND
1,2,3-TRICHLOROBENZENE	5	ND	NAPHTHALENE	5	ND

QA/QC SURROGATE RECOVERIES

TOLUENE-d8(80-116) 103% BROMOFLUOROBENZENE(86-115) 110%
1,2-DICHLOROETHANE-D4(76-114) 86%

ND = NOT DETECTED ABOVE REPORTING LIMIT
RL = REPORTING LIMIT; DEFINED AS THE PRACTICAL QUANTITATION LIMIT PLUS ANY DILUTION, POSITIVE VALUES BELOW THIS LIMIT WERE NOT REPORTED.

ATAS 875 Fee Fee Road • Maryland Heights, MO 63043 • (314) 434-4570 - FAX (314) 434-0080

LABORATORY QUALITY CONTROL SEQUENCE

SAMPLE MATRIX: WATER
DATE ANALYZED: 02-12-00
METHOD REF. : SW846-8260B, EPA METHODOLOGY

REPORT DATE: 02-16-00

LABORATORY CONTROL SAMPLE RECOVERY

COMPOUND	LCS % REC.
1,1-DICHLOROETHENE	98
TRICHLOROETHENE	100
BENZENE	104
TOLUENE	110
CHLOROBENZENE	98

* = VALUES OUTSIDE OF ADVISORY LIMITS

ATAS 875 Fee Fee Road • Maryland Heights, MO 63043 • (314) 434-4570 - FAX (314) 434-0080

CLIENT: DAMES & MOORE
721 EMERSON ROAD, SUITE 220
ST. LOUIS, MO 63141
ATTN: GEORGE JONES

REPORT: 2891201MT(720)

DATE : 02-16-00

QA/QC

DESCRIPTION		PARAMETER	RESULTS	
METHOD BLANK	02-11-00	ARSENIC	<1.00	mg/Kg
METHOD BLANK	02-11-00	BARIUM	<0.40	mg/Kg
METHOD BLANK	02-11-00	CADMIUM	<0.20	mg/Kg
METHOD BLANK	02-11-00	CHROMIUM	<0.20	mg/Kg
METHOD BLANK	02-11-00	LEAD	<1.00	mg/Kg
METHOD BLANK	02-11-00	SILVER	<0.40	mg/Kg
METHOD BLANK	02-11-00	SELENIUM	<2.00	mg/Kg
METHOD BLANK	02-15-00	MERCURY	<0.20	mg/Kg
CONTROL SPIKE	02-11-00	ARSENIC	86 %	RECOVERY
CONTROL SPIKE	02-11-00	BARIUM	100 %	RECOVERY
CONTROL SPIKE	02-11-00	CADMIUM	90 %	RECOVERY
CONTROL SPIKE	02-11-00	CHROMIUM	92 %	RECOVERY
CONTROL SPIKE	02-11-00	LEAD	90 %	RECOVERY
CONTROL SPIKE	02-11-00	SILVER	95 %	RECOVERY
CONTROL SPIKE	02-11-00	SELENIUM	89 %	RECOVERY
CONTROL SPIKE	02-15-00	MERCURY	101 %	RECOVERY

ATAS 875 Fee Fee Road • Maryland Heights, MO 63043 • (314) 434-4570 - FAX (314) 434-0080

L_ORATORY QUALITY CONTROL SEQUENCE

METHOD: OA-2

LABORATORY BLANK

MATRIX : SOIL
EXTRACTION DATE: 02-10-00
ANALYSIS DATE : 02-10-00

DILUTION FACTOR: 1.0

COMPOUND	REPORTING LIMIT	UNIT	RESULTS
TOTAL EXTRACTABLE HYDROCARBONS			
GASOLINE	3.0	mg/Kg	ND
MINERAL SPIRITS	3.0	mg/Kg	ND
KEROSENE	3.0	mg/Kg	ND
DIESEL FUEL	3.0	mg/Kg	ND
#6 FUEL OIL	3.0	mg/Kg	ND
HYDRAULIC FLUID	3.0	mg/Kg	ND
MOTOR OIL	3.0	mg/Kg	ND

S_ ROGATE RECOVERY (P-TERPHENYL D14): 81 %

LABORATORY CONTROL SAMPLE RESULTS

	LCS PERCENT RECOVERY
KEROSENE	91

ND - NOT DETECTED ABOVE REPORTING LIMIT

ATAS 875 Fee Fee Road • Maryland Heights, MO 63043 • (314) 434-4570 - FAX (314) 434-0080

CLIENT: DAMES & MOORE
721 EMERSON ROAD, SUITE 220
ST. LOUIS, MO 63141
ATTN: GEORGE JONES

REPORT: 2891301MT(720)

DATE : 02-16-00

QA/QC

DESCRIPTION		PARAMETER	RESULTS	
METHOD BLANK	02-11-00	ARSENIC	<1.0	mg/Kg
METHOD BLANK	02-11-00	BARIUM	<0.40	mg/Kg
METHOD BLANK	02-11-00	CADMIUM	<0.20	mg/Kg
METHOD BLANK	02-11-00	CHROMIUM	<0.20	mg/Kg
METHOD BLANK	02-11-00	LEAD	<1.0	mg/Kg
METHOD BLANK	02-11-00	SILVER	<0.40	mg/Kg
METHOD BLANK	02-11-00	SELENIUM	<2.0	mg/Kg
METHOD BLANK	02-15-00	MERCURY	<0.20	mg/Kg
CONTROL SPIKE	02-11-00	ARSENIC	86 %	RECOVERY
CONTROL SPIKE	02-11-00	BARIUM	100 %	RECOVERY
CONTROL SPIKE	02-11-00	CADMIUM	90 %	RECOVERY
CONTROL SPIKE	02-11-00	CHROMIUM	92 %	RECOVERY
CONTROL SPIKE	02-11-00	LEAD	90 %	RECOVERY
CONTROL SPIKE	02-11-00	SILVER	95 %	RECOVERY
CONTROL SPIKE	02-11-00	SELENIUM	89 %	RECOVERY
CONTROL SPIKE	02-15-00	MERCURY	101 %	RECOVERY

ATAS 875 Fee Fee Road • Maryland Heights, MO 63043 • (314) 434-4570 - FAX (314) 434-0080

ORATORY QUALITY CONTROL SEQUENCE

METHOD: OA-2

LABORATORY BLANK

MATRIX : SOIL
EXTRACTION DATE: 02-11-00
ANALYSIS DATE : 02-11-00

DILUTION FACTOR: 1.0

COMPOUND	REPORTING LIMIT	UNIT	RESULTS
TOTAL EXTRACTABLE HYDROCARBONS			
GASOLINE	3.0	mg/Kg	ND
MINERAL SPIRITS	3.0	mg/Kg	ND
KEROSENE	3.0	mg/Kg	ND
DIESEL FUEL	3.0	mg/Kg	ND
#6 FUEL OIL	3.0	mg/Kg	ND
HYDRAULIC FLUID	3.0	mg/Kg	ND
MOTOR OIL	3.0	mg/Kg	ND

SURROGATE RECOVERY (P-TERPHENYL D14): 85 %

LABORATORY CONTROL SAMPLE RESULTS

	LCS PERCENT RECOVERY
KEROSENE	87

ND = NOT DETECTED ABOVE REPORTING LIMIT

ATAS 875 Fee Fee Road • Maryland Heights, MO 63043 • (314) 434-4570 - FAX (314) 434-0080

CLIENT: DAMES & MOORE
721 EMERSON ROAD, SUITE 220
ST. LOUIS, MO 63141
ATTN: GEORGE JONES

REPORT: 2891901VO(720)
DATE : 02-16-00

SAMPLE MATRIX : SOIL
ATAS # : METHOD BLANK
DATE SUBMITTED: 02-09-00
DATE ANALYZED : 02-14-00

METHOD REF.: SW846-8260B, EPA METHODOLOGY
PROJECT # : 27994-022-045 - PENTAIR
SAMPLE ID : METHOD BLANK

RESULTS REPORTED IN ug/Kg OR Parts Per Billion (PPB)

OLATILES	R.L.	RESULTS	VOLATILES	R.L.	RESULTS
YLENE (TOTAL)	500	ND	TOLUENE	500	ND
ICHLORODIFLUOROMETHANE	1000	ND	trans-1,3-DICHLOROPROPENE	500	ND
HLOROMETHANE	1000	ND	1,1,2-TRICHLOROETHANE	500	ND
INYL CHLORIDE	1000	ND	TETRACHLOROETHENE	500	ND
ROMOMETHANE	1000	ND	1,3-DICHLOROPROPANE	500	ND
HLOROETHANE	1000	ND	2-HEXANONE	1000	ND
RICHLOROFLUOROMETHANE	1000	ND	DIBROMOCHLOROMETHANE	500	ND
,1-DICHLOROETHENE	500	ND	1,2-DIBROMOETHANE	500	ND
CETONE	1000	ND	CHLOROBENZENE	500	ND
ODOMETHANE	1000	ND	1,1,1,2-TETRACHLOROETHANE	500	ND
ARBON DISULFIDE	500	ND	ETHYLBENZENE	500	ND
ETHYLENE CHLORIDE	500	130 J	STYRENE	500	ND
rans-1,2-DICHLOROETHENE	500	ND	BROMOFORM	500	ND
ET[illegible], TERT-BUTYL ETHER	1000	ND	ISOPROPYLBENZENE	500	ND
[illegible]CHLOROETHANE	500	ND	1,1,2,2-TETRACHLOROETHANE	500	ND
INYL ACETATE	1000	ND	BROMOBENZENE	500	ND
,2-DICHLOROPROPANE	500	ND	1,2,3-TRICHLOROPROPANE	500	ND
is-1,2-DICHLOROETHENE	500	ND	n-PROPYLBENZENE	500	ND
-BUTANONE	1000	ND	2-CHLOROTOLUENE	500	ND
ROMOCHLOROMETHANE	500	ND	1,3,5-TRIMETHYLBENZENE	500	ND
ILOROFORM	500	ND	4-CHLOROTOLUENE	500	ND
,1,1-TRICHLOROETHANE	500	ND	TERT-BUTYLBENZENE	500	ND
ARBON TETRACHLORIDE	500	ND	1,2,4-TRIMETHYLBENZENE	500	ND
1-DICHLOROPROPENE	500	ND	sec-BUTYLBENZENE	500	ND
NZENE	500	ND	1,3-DICHLOROBENZENE	500	ND
2-DICHLOROETHANE	500	ND	p-ISOPROPYLTOLUENE	500	ND
ICHLOROETHENE	500	ND	1,4-DICHLOROBENZENE	500	ND
2-DICHLOROPROPANE	500	ND	n-BUTYLBENZENE	500	ND
BROMOMETHANE	500	ND	1,2-DICHLOROBENZENE	500	ND
OMODICHLOROMETHANE	500	ND	1,2-DIBROMO-3-CHLOROPROPANE	500	ND
s-1,3-DICHLOROPROPENE	500	ND	1,2,4-TRICHLOROBENZENE	500	ND
METHYL-2-PENTANONE	1000	ND	HEXACHLOROBUTADIENE	500	ND
2,3-TRICHLOROBENZENE	500	ND	NAPHTHALENE	500	ND

QA/QC SURROGATE RECOVERIES

TOLUENE-d8(81-117) 99% BROMOFLUOROBENZENE(74-121) 106%
1,2-DICHLOROETHANE-D4(70-121) 93%

= ESTIMATED VALUE BELOW REPORTING LIMIT
= NOT DETECTED ABOVE REPORTING LIMIT
= REPORTING LIMIT; DEFINED AS THE PRACTICAL QUANTITATION LIMIT PLUS ANY DILUTION

ATAS 875 Fee Fee Road • Maryland Heights, MO 63043 • (314) 434-4570 - FAX (314) 434-0080

LABORATORY QUALITY CONTROL SEQUENCE

SAMPLE MATRIX: WATER
DATE ANALYZED: 02-14-00
METHOD REF. : SW846-8260B, EPA METHODOLOGY

REPORT DATE: 02-16-00

LABORATORY CONTROL SAMPLE RECOVERY

COMPOUND	LCS % REC.
1,1-DICHLOROETHENE	92
TRICHLOROETHENE	100
BE ENE	106
TOLUENE	110
CHLOROBENZENE	98

- VALUES OUTSIDE OF ADVISORY LIMITS

ATAS 875 Fee Fee Road • Maryland Heights, MO 63043 • (314) 434-4570 - FAX (314) 434-0080

CLIENT: DAMES & MOORE
721 EMERSON ROAD, SUITE 220
ST. LOUIS, MO 63141
ATTN: GEORGE JONES

REPORT: 2891901VO(720)

DATE : 02-16-00

SAMPLE MATRIX : SOIL
ATAS # : METHOD BLANK
DATE SUBMITTED: 02-09-00
DATE ANALYZED : 02-10-00

METHOD REF.: SW846-8260B, EPA METHODOLOGY
PROJECT # : 27994-022-045 - PENTAIR
SAMPLE ID : METHOD BLANK

RESULTS REPORTED IN ug/Kg OR Parts Per Billion (PPB)

VOLATILES	R.L.	RESULTS	VOLATILES	R.L.	RESULTS
XYLENE (TOTAL)	5	ND	TOLUENE	5	ND
DICHLORODIFLUOROMETHANE	10	ND	trans-1,3-DICHLOROPROPENE	5	ND
CHLOROMETHANE	10	ND	1,1,2-TRICHLOROETHANE	5	ND
VINYL CHLORIDE	10	ND	TETRACHLOROETHENE	5	ND
BROMOMETHANE	10	ND	1,3-DICHLOROPROPANE	5	ND
CHLOROETHANE	10	ND	2-HEXANONE	10	ND
TRICHLOROFLUOROMETHANE	10	ND	DIBROMOCHLOROMETHANE	5	ND
1,1-DICHLOROETHENE	5	ND	1,2-DIBROMOETHANE	5	ND
ACETONE	10	ND	CHLOROBENZENE	5	ND
IODOMETHANE	10	ND	1,1,1,2-TETRACHLOROETHANE	5	ND
CARBON DISULFIDE	5	ND	ETHYLBENZENE	5	ND
METHYLENE CHLORIDE	5	10	STYRENE	5	ND
trans-1,2-DICHLOROETHENE	5	ND	BROMOFORM	5	ND
MT TERT-BUTYL ETHER	10	ND	ISOPROPYLBENZENE	5	ND
1,1-DICHLOROETHANE	5	ND	1,1,2,2-TETRACHLOROETHANE	5	ND
VINYL ACETATE	10	ND	BROMOBENZENE	5	ND
2,2-DICHLOROPROPANE	5	ND	1,2,3-TRICHLOROPROPANE	5	ND
cis-1,2-DICHLOROETHENE	5	ND	n-PROPYLBENZENE	5	ND
2-BUTANONE	10	ND	2-CHLOROTOLUENE	5	ND
BROMOCHLOROMETHANE	5	ND	1,3,5-TRIMETHYLBENZENE	5	ND
CHLOROFORM	5	ND	4-CHLOROTOLUENE	5	ND
1,1,1-TRICHLOROETHANE	5	ND	TERT-BUTYLBENZENE	5	ND
CARBON TETRACHLORIDE	5	ND	1,2,4-TRIMETHYLBENZENE	5	ND
1,1-DICHLOROPROPENE	5	ND	sec-BUTYLBENZENE	5	ND
BENZENE	5	ND	1,3-DICHLOROBENZENE	5	ND
1,2-DICHLOROETHANE	5	ND	p-ISOPROPYLTOLUENE	5	ND
TRICHLOROETHENE	5	ND	1,4-DICHLOROBENZENE	5	ND
1,2-DICHLOROPROPANE	5	ND	n-BUTYLBENZENE	5	ND
DIBROMOMETHANE	5	ND	1,2-DICHLOROBENZENE	5	ND
BROMODICHLOROMETHANE	5	ND	1,2-DIBROMO-3-CHLOROPROPANE	5	ND
cis-1,3-DICHLOROPROPENE	5	ND	1,2,4-TRICHLOROBENZENE	5	ND
4-METHYL-2-PENTANONE	10	ND	HEXACHLOROBUTADIENE	5	ND
1,2,3-TRICHLOROBENZENE	5	ND	NAPHTHALENE	5	ND

QA/QC SURROGATE RECOVERIES

TOLUENE-d8(81-117) 98% BROMOFLUOROBENZENE(74-121) 95%
1,2-DICHLOROETHANE-D4(70-121) 87%

D = NOT DETECTED ABOVE REPORTING LIMIT
L = REPORTING LIMIT; DEFINED AS THE PRACTICAL QUANTITATION LIMIT PLUS ANY DILUTION, POSITIVE VALUES BELOW THIS LIMIT WERE NOT REPORTED.

ATAS 875 Fee Fee Road • Maryland Heights, MO 63043 • (314) 434-4570 - FAX (314) 434-0080

I ORATORY QUALITY CONTROL SEQUENCE

SAMPLE MATRIX: SOIL
DATE ANALYZED: 02-10-00
METHOD REF. : SW846-8260B, EPA METHODOLOGY

REPORT DATE: 02-16-00

LABORATORY CONTROL SAMPLE RECOVERY

COMPOUND	LCS % REC.
1,1-DICHLOROETHENE	108
TRICHLOROETHENE	104
BL ENE	102
TOLUENE	106
CHLOROBENZENE	102

= VALUES OUTSIDE OF ADVISORY LIMITS

ATAS 875 Fee Fee Road • Maryland Heights, MO 63043 • (314) 434-4570 - FAX (314) 434-0080

CLIENT: DAMES & MOORE
721 EMERSON ROAD, SUITE 220
ST. LOUIS, MO 63141
ATTN: GEORGE JONES

REPORT: 2891901VO(720)

DATE : 02-16-00

SAMPLE MATRIX : SOIL
ATAS # : METHOD BLANK
DATE SUBMITTED: 02-09-00
DATE ANALYZED : 02-14-00

METHOD REF.: SW846-8260B, EPA METHODOLOGY
PROJECT # : 27994-022-045 - PENTAIR
SAMPLE ID : METHOD BLANK

RESULTS REPORTED IN ug/Kg OR Parts Per Billion (PPB)

VOLATILES	R.L.	RESULTS	VOLATILES	R.L.	RESULTS
XYLENE (TOTAL)	5	ND	TOLUENE	5	ND
DICHLORODIFLUOROMETHANE	10	ND	trans-1,3-DICHLOROPROPENE	5	ND
CHLOROMETHANE	10	ND	1,1,2-TRICHLOROETHANE	5	ND
VINYL CHLORIDE	10	ND	TETRACHLOROETHENE	5	ND
BROMOMETHANE	10	ND	1,3-DICHLOROPROPANE	5	ND
CHLOROETHANE	10	ND	2-HEXANONE	10	ND
TRICHLOROFLUOROMETHANE	10	ND	DIBROMOCHLOROMETHANE	5	ND
1,1-DICHLOROETHENE	5	ND	1,2-DIBROMOETHANE	5	ND
ACETONE	10	ND	CHLOROBENZENE	5	ND
IODOMETHANE	10	ND	1,1,1,2-TETRACHLOROETHANE	5	ND
CARBON DISULFIDE	5	ND	ETHYLBENZENE	5	ND
METHYLENE CHLORIDE	5	9	STYRENE	5	ND
trans-1,2-DICHLOROETHENE	5	ND	BROMOFORM	5	ND
METHYL TERT-BUTYL ETHER	10	ND	ISOPROPYLBENZENE	5	ND
1 DICHLOROETHANE	5	ND	1,1,2,2-TETRACHLOROETHANE	5	ND
VINYL ACETATE	10	ND	BROMOBENZENE	5	ND
2,2-DICHLOROPROPANE	5	ND	1,2,3-TRICHLOROPROPANE	5	ND
cis-1,2-DICHLOROETHENE	5	ND	n-PROPYLBENZENE	5	ND
2-BUTANONE	10	ND	2-CHLOROTOLUENE	5	ND
BROMOCHLOROMETHANE	5	ND	1,3,5-TRIMETHYLBENZENE	5	ND
CHLOROFORM	5	ND	4-CHLOROTOLUENE	5	ND
1,1,1-TRICHLOROETHANE	5	ND	TERT-BUTYLBENZENE	5	ND
CARBON TETRACHLORIDE	5	ND	1,2,4-TRIMETHYLBENZENE	5	ND
1,1-DICHLOROPROPENE	5	ND	sec-BUTYLBENZENE	5	ND
BENZENE	5	ND	1,3-DICHLOROBENZENE	5	ND
1,2-DICHLOROETHANE	5	ND	p-ISOPROPYLTOLUENE	5	ND
TRICHLOROETHENE	5	ND	1,4-DICHLOROBENZENE	5	ND
1,2-DICHLOROPROPANE	5	ND	n-BUTYLBENZENE	5	ND
DIBROMOMETHANE	5	ND	1,2-DICHLOROBENZENE	5	ND
BROMODICHLOROMETHANE	5	ND	1,2-DIBROMO-3-CHLOROPROPANE	5	ND
cis-1,3-DICHLOROPROPENE	5	ND	1,2,4-TRICHLOROBENZENE	5	ND
4-METHYL-2-PENTANONE	10	ND	HEXACHLOROBUTADIENE	5	ND
1,2,3-TRICHLOROBENZENE	5	ND	NAPHTHALENE	5	ND

QA/QC SURROGATE RECOVERIES

TOLUENE-d8(81-117) 96% BROMOFLUOROBENZENE(74-121) 100%
1,2-DICHLOROETHANE-D4(70-121) 96%

D = NOT DETECTED ABOVE REPORTING LIMIT
L = REPORTING LIMIT; DEFINED AS THE PRACTICAL QUANTITATION LIMIT PLUS ANY DILUTION. POSITIVE VALUES BELOW THIS LIMIT WERE NOT REPORTED.

ATAS 875 Fee Fee Road • Maryland Heights, MO 63043 • (314) 434-4570 - FAX (314) 434-0080

LABORATORY QUALITY CONTROL SEQUENCE

SAMPLE MATRIX: SOIL
DATE ANALYZED: 02-14-00
METHOD REF. : SW846-8260B, EPA METHODOLOGY

REPORT DATE: 02-16-00

LABORATORY CONTROL SAMPLE RECOVERY

COMPOUND	LCS % REC.
1,1-DICHLOROETHENE	106
TRICHLOROETHENE	106
BENZENE	98
T ENE	102
CHLOROBENZENE	102

= VALUES OUTSIDE OF ADVISORY LIMITS

ATAS 875 Fee Fee Road • Maryland Heights, MO 63043 • (314) 434-4570 - FAX (314) 434-0080

CLIENT: DAMES & MOORE
721 EMERSON ROAD, SUITE 220
ST. LOUIS, MO 63141
ATTN: GEORGE JONES

REPORT: 2891901VO(720)
DATE : 02-16-00

SAMPLE MATRIX : WATER
ATAS # : METHOD BLANK
DATE SUBMITTED: 02-09-00
DATE ANALYZED : 02-10-00

METHOD REF.: SW846-8260B, EPA METHODOLOGY
PROJECT # : 27994-022-045 - PENTAIR
SAMPLE ID : METHOD BLANK

RESULTS REPORTED IN ug/L OR Parts Per Billion (PPB)

VOLATILES	R.L.	RESULTS	VOLATILES	R.L.	RESULTS
XYLENE (TOTAL)	5	ND	TOLUENE	5	ND
DICHLORODIFLUOROMETHANE	10	ND	trans-1,3-DICHLOROPROPENE	5	ND
CHLOROMETHANE	10	ND	1,1,2-TRICHLOROETHANE	5	ND
VINYL CHLORIDE	10	ND	TETRACHLOROETHENE	5	ND
BROMOMETHANE	10	ND	1,3-DICHLOROPROPANE	5	ND
CHLOROETHANE	10	ND	2-HEXANONE	10	ND
TRICHLOROFLUOROMETHANE	10	ND	DIBROMOCHLOROMETHANE	5	ND
1,1-DICHLOROETHENE	5	ND	1,2-DIBROMOETHANE	5	ND
ACETONE	10	ND	CHLOROBENZENE	5	ND
IODOMETHANE	10	ND	1,1,1,2-TETRACHLOROETHANE	5	ND
CARBON DISULFIDE	5	ND	ETHYLBENZENE	5	ND
METHYLENE CHLORIDE	5	ND	STYRENE	5	ND
[illegible]-1,2-DICHLOROETHENE	5	ND	BROMOFORM	5	ND
M[illegible]L TERT-BUTYL ETHER	10	ND	ISOPROPYLBENZENE	5	ND
1,1-DICHLOROETHANE	5	ND	1,1,2,2-TETRACHLOROETHANE	5	ND
VINYL ACETATE	10	ND	BROMOBENZENE	5	ND
2,2-DICHLOROPROPANE	5	ND	1,2,3-TRICHLOROPROPANE	5	ND
cis-1,2-DICHLOROETHENE	5	ND	n-PROPYLBENZENE	5	ND
2-BUTANONE	10	ND	2-CHLOROTOLUENE	5	ND
BROMOCHLOROMETHANE	5	ND	1,3,5-TRIMETHYLBENZENE	5	ND
CHLOROFORM	5	ND	4-CHLOROTOLUENE	5	ND
1,1,1-TRICHLOROETHANE	5	ND	TERT-BUTYLBENZENE	5	ND
CARBON TETRACHLORIDE	5	ND	1,2,4-TRIMETHYLBENZENE	5	ND
1,1-DICHLOROPROPENE	5	ND	sec-BUTYLBENZENE	5	ND
BENZENE	5	ND	1,3-DICHLOROBENZENE	5	ND
1,2-DICHLOROETHANE	5	ND	p-ISOPROPYLTOLUENE	5	ND
TRICHLOROETHENE	5	ND	1,4-DICHLOROBENZENE	5	ND
1,2-DICHLOROPROPANE	5	ND	n-BUTYLBENZENE	5	ND
DIBROMOMETHANE	5	ND	1,2-DICHLOROBENZENE	5	ND
BROMODICHLOROMETHANE	5	ND	1,2-DIBROMO-3-CHLOROPROPANE	5	ND
cis-1,3-DICHLOROPROPENE	5	ND	1,2,4-TRICHLOROBENZENE	5	ND
4-METHYL-2-PENTANONE	10	ND	HEXACHLOROBUTADIENE	5	ND
1,2,3-TRICHLOROBENZENE	5	ND	NAPHTHALENE	5	ND

QA/QC SURROGATE RECOVERIES

TOLUENE-d8(80-116) 106% BROMOFLUOROBENZENE(86-115) 105%
1,2-DICHLOROETHANE-D4(76-114) 82%

D = NOT DETECTED ABOVE REPORTING LIMIT
L = REPORTING LIMIT; DEFINED AS THE PRACTICAL QUANTITATION LIMIT PLUS ANY DILUTION, POSITIVE VALUES BELOW THIS LIMIT WERE NOT REPORTED.

ATAS 875 Fee Fee Road • Maryland Heights, MO 63043 • (314) 434-4570 - FAX (314) 434-0080

LABORATORY QUALITY CONTROL SEQUENCE

SAMPLE MATRIX: WATER
DATE ANALYZED: 02-10-00
METHOD REF. : SW846-8260B, EPA METHODOLOGY

REPORT DATE: 02-16-00

MATRIX SPIKE / MATRIX SPIKE DUPLICATE RECOVERY

COMPOUND	28919.07 MS % REC.	28919.07 MSD % REC.	RPD	QC RPD	ADVISORY LIMITS
1,1-DICHLOROETHENE	90	98	9	16	47-137
TRICHLOROETHENE	96	98	2	11	81-117
BENZENE	96	104	8	12	81-118
TOLUENE	104	112	7	10	75-128
CHLOROBENZENE	92	96	4	8	85-115

* = VALUES OUTSIDE OF ADVISORY LIMITS

ATAS 875 Fee Fee Road • Maryland Heights, MO 63043 • (314) 434-4570 - FAX (314) 434-0080

CLIENT: DAMES & MOORE
721 EMERSON ROAD, SUITE 220
ST. LOUIS, MO 63141
ATTN: GEORGE JONES

REPORT: 2891901MT(720)

DATE : 02-17-00

QA/QC

DESCRIPTION		PARAMETER	RESULTS	
METHOD BLANK	02-11-00	ARSENIC	<1.0	mg/Kg
METHOD BLANK	02-17-00	ARSENIC	<1.0	mg/Kg
METHOD BLANK	02-11-00	BARIUM	<0.40	mg/Kg
METHOD BLANK	02-16-00	BARIUM	<0.40	mg/Kg
METHOD BLANK	02-11-00	CADMIUM	<0.20	mg/Kg
METHOD BLANK	02-16-00	CADMIUM	<0.20	mg/Kg
METHOD BLANK	02-11-00	CHROMIUM	<0.20	mg/Kg
METHOD BLANK	02-16-00	CHROMIUM	<0.20	mg/Kg
METHOD BLANK	02-11-00	LEAD	<1.0	mg/Kg
METHOD BLANK	02-16-00	LEAD	<1.0	mg/Kg
METHOD BLANK	02-11-00	SILVER	<0.40	mg/Kg
METHOD BLANK	02-16-00	SILVER	<0.40	mg/Kg
METHOD BLANK	02-11-00	SELENIUM	<2.0	mg/Kg
METHOD BLANK	02-16-00	SELENIUM	<2.0	mg/Kg
METHOD BLANK	02-15-00	MERCURY	<0.20	mg/Kg
METHOD BLANK	02-16-00	MERCURY	<0.20	mg/Kg
CONTROL SPIKE	02-11-00	ARSENIC	90 %	RECOVERY
CONTROL SPIKE	02-17-00	ARSENIC	98 %	RECOVERY
CONTROL SPIKE	02-11-00	BARIUM	99 %	RECOVERY
CONTROL SPIKE	02-16-00	BARIUM	101 %	RECOVERY
CONTROL SPIKE	02-11-00	CADMIUM	89 %	RECOVERY
CONTROL SPIKE	02-16-00	CADMIUM	99 %	RECOVERY
CONTROL SPIKE	02-11-00	CHROMIUM	94 %	RECOVERY
CONTROL SPIKE	02-16-00	CHROMIUM	103 %	RECOVERY
CONTROL SPIKE	02-11-00	LEAD	90 %	RECOVERY
CONTROL SPIKE	02-16-00	LEAD	94 %	RECOVERY
CONTROL SPIKE	02-11-00	SILVER	92 %	RECOVERY
CONTROL SPIKE	02-16-00	SILVER	106 %	RECOVERY
CONTROL SPIKE	02-11-00	SELENIUM	90 %	RECOVERY
CONTROL SPIKE	02-16-00	SELENIUM	101 %	RECOVERY
CONTROL SPIKE	02-15-00	MERCURY	101 %	RECOVERY
CONTROL SPIKE	02-16-00	MERCURY	106 %	RECOVERY

ATAS 875 Fee Fee Road • Maryland Heights, MO 63043 • (314) 434-4570 - FAX (314) 434-0080

CLIENT: DAMES & MOORE
721 EMERSON ROAD, SUITE 220
ST. LOUIS, MO 63141
ATTN: GEORGE JONES

REPORT: 2891901MT(720)

DATE : 02-17-00

QA/QC

DESCRIPTION		PARAMETER	RESULTS	
METHOD BLANK	02-12-00	ARSENIC	<0.050	mg/L
METHOD BLANK	02-14-00	BARIUM	<0.020	mg/L
METHOD BLANK	02-14-00	CADMIUM	<0.005	mg/L
METHOD BLANK	02-14-00	CHROMIUM	<0.005	mg/L
METHOD BLANK	02-14-00	LEAD	<0.050	mg/L
METHOD BLANK	02-14-00	SILVER	<0.010	mg/L
METHOD BLANK	02-14-00	SELENIUM	<0.100	mg/L
METHOD BLANK	02-15-00	MERCURY	<0.0002	mg/L
CONTROL SPIKE	02-12-00	ARSENIC	106 %	RECOVERY
CONTROL SPIKE	02-14-00	BARIUM	98 %	RECOVERY
CONTROL SPIKE	02-14-00	CADMIUM	100 %	RECOVERY
CONTROL SPIKE	02-14-00	CHROMIUM	101 %	RECOVERY
CONTROL SPIKE	02-14-00	LEAD	100 %	RECOVERY
CONTROL SPIKE	02-14-00	SILVER	110 %	RECOVERY
CONTROL SPIKE	02-14-00	SELENIUM	102 %	RECOVERY
CONTROL SPIKE	02-15-00	MERCURY	107 %	RECOVERY

ATAS 875 Fee Fee Road • Maryland Heights, MO 63043 • (314) 434-4570 - FAX (314) 434-0080

ORATORY QUALITY CONTROL SEQUENCE

METHOD: OA-2

LABORATORY BLANK

MATRIX : SOIL
EXTRACTION DATE: 02-11-00
ANALYSIS DATE : 02-11-00

DILUTION FACTOR: 1.0

COMPOUND	REPORTING LIMIT	UNIT	RESULTS
TOTAL EXTRACTABLE HYDROCARBONS			
GASOLINE	3.0	mg/Kg	ND
MINERAL SPIRITS	3.0	mg/Kg	ND
KEROSENE	3.0	mg/Kg	ND
DIESEL FUEL	3.0	mg/Kg	ND
#6 FUEL OIL	3.0	mg/Kg	ND
HYDRAULIC FLUID	3.0	mg/Kg	ND
MOTOR OIL	3.0	mg/Kg	ND

SURROGATE RECOVERY (P-TERPHENYL D14): 85 %

LABORATORY CONTROL SAMPLE RESULTS

	LCS PERCENT RECOVERY
KEROSENE	87

ND = NOT DETECTED ABOVE REPORTING LIMIT

ATAS 875 Fee Fee Road • Maryland Heights, MO 63043 • (314) 434-4570 - FAX (314) 434-0080

LABORATORY QUALITY CONTROL SEQUENCE

METHOD: OA-2

LABORATORY BLANK

MATRIX : SOIL
EXTRACTION DATE: 02-15-00
ANALYSIS DATE : 02-15-00

DILUTION FACTOR: 1.0

COMPOUND	REPORTING LIMIT	UNIT	RESULTS
TOTAL EXTRACTABLE HYDROCARBONS			
GASOLINE	3.0	mg/Kg	ND
MINERAL SPIRITS	3.0	mg/Kg	ND
KEROSENE	3.0	mg/Kg	ND
DIESEL FUEL	3.0	mg/Kg	ND
#6 FUEL OIL	3.0	mg/Kg	ND
HYDRAULIC FLUID	3.0	mg/Kg	ND
MOTOR OIL	3.0	mg/Kg	ND

SURROGATE RECOVERY (P-TERPHENYL D14): 85 %

LABORATORY CONTROL SAMPLE RESULTS

	LCS PERCENT RECOVERY
KEROSENE	84

ND = NOT DETECTED ABOVE REPORTING LIMIT

ATAS 875 Fee Fee Road • Maryland Heights, MO 63043 • (314) 434-4570 - FAX (314) 434-0080

:ORATORY QUALITY CONTROL SEQUENCE

METHOD: OA-2

LABORATORY BLANK

MATRIX : WATER DILUTION FACTOR: 1.0
EXTRACTION DATE: 02-10-00
ANALYSIS DATE : 02-10-00

COMPOUND	REPORTING LIMIT	UNIT	RESULTS
TOTAL EXTRACTABLE HYDROCARBONS			
GASOLINE	0.100	mg/L	ND
MINERAL SPIRITS	0.100	mg/L	ND
KEROSENE	0.100	mg/L	ND
DIESEL FUEL	0.100	mg/L	ND
#6 FUEL OIL	0.100	mg/L	ND
HYDRAULIC FLUID	0.100	mg/L	ND
MOTOR OIL	0.100	mg/L	ND

SURROGATE RECOVERY (P-TERPHENYL D14): 45 %

LABORATORY CONTROL SAMPLE / LABORATORY CONTROL SAMPLE DUPLICATE RESULTS

	LCS PERCENT RECOVERY	LCSD PERCENT RECOVERY	RELATIVE PERCENT DIFFERENCE
KEROSENE	66	68	3

ND = NOT DETECTED ABOVE REPORTING LIMIT

ATAS

AMERICAN TECHNICAL & ANALYTICAL SERVICES, Inc.

875 Fee Fee Road • Maryland Heights, MO 63043 • Office (314) 434-4570 • Fax (314) 434-0080

CHAIN OF CUSTODY RECORD

PAGE 1 OF 1

No. 10171

ATAS Client Name: DAMES & MOORE

Project Name: PENTAIR

Project #:

Form Completed By: ERIC STRITSCH

P.O. #:

Type of Analysis: TPH (8015) (OA1/OA2) VOC (8260) METALS (6010/7470)

Sample ID/Location	Sample Date	Sample Time	Sample Matrix	Grab	Comp	No. of Containers	TPH (8015) (OA1/OA2)	VOC (8260)	METALS (6010/7470)						Collector's Initials	Remarks
MW-5(18')	11-22-99	2:45	SOIL	X		3	X	X	X							
MW-6(25')	11-23-99	2:30	SOIL	X		3	X	X	X							

Relinquished by:	Received by:	Relinquished by:	Received by:
Signature: [signature]	Signature: [signature]	Signature	Signature
Printed Name: ERIC STRITSCH	Printed Name: L. MASSENBERG	Printed Name	Printed Name
Firm: DAMES & MOORE	Firm: ATAS	Firm	Firm
Date/Time: 11-23-99 / 5:00	Date/Time: 11-23-99 1700	Date/Time	Date/Time

Samples received unannounced with less than 48 hours holding time and/or ASAP request may be subject to additional surcharges.

Turnaround Requirements
- ___ ASAP
- ___ 5 working days
- X 10 working days
- ___ 15 working days

Preservatives
- A-Cold
- B-HNO_3
- C-H_2SO_4
- D-NaOH
- E-HCl
- F-_____

142 Temperature

SEND RESULTS TO (Name & Company): DAVID HEINZE / DAMES & MOORE

Original to ATAS / Copy to Client

AT

AMERICAN TECHNICAL & ANALYTICAL SERVICES, Inc.

875 Fee Fee Road • Maryland Heights, MO 63043 • Office (314) 434-4570 • Fax (314) 434-0080

CHAIN OF CUSTODY RECORD

No. 10183

ATAS Client Name: Dames & Moore

Project Name: Pentair

Project #:

Form Completed By: Eric Fritsch

P.O. #:

Sample ID/Location	Sample Date	Sample Time	Sample Matrix	Grab	Comp	No. of Containers	TPH (GRO/DRO) (8015)	VOC (8260)	METALS (6010/7470)								Remarks
MW-3(8')	11-23-99	5:00	Soil	X		3	X	X	X								
MW-4(6')	11-24-99	8:30	Soil	X		3	X	X	X								
MW-2(17')	11-24-99	11:05	Soil	X		3	X	X	X								

Type of Analysis

Collector's Initials

Relinquished by:	Received by:	Relinquished by:	Received by:
Signature: [signature]	Signature: [signature]	Signature:	Signature:
Printed Name: Eric K Fritsch	Printed Name: L. Massenberg	Printed Name:	Printed Name:
Firm: Dames & Moore	Firm: ATAS	Firm:	Firm:
Date/Time: 11-24-99 / 4:00 p.m.	Date/Time: 11-24-99 1606	Date/Time:	Date/Time:

Samples received unannounced with less than 48 hours holding time and/or ASAP request may be subject to additional surcharges.

Turnaround Requirements
- ___ ASAP
- ___ 5 working days
- [redacted] 10 working days
- ___ 15 working days

7 Day

952 Temperature

Preservatives
- A-Cold
- B-HNO_3
- C-H_2SO_4
- D-NaOH
- E-HCl
- F-____

SEND RESULTS TO (Name & Company): David Hence / Dames & Moore

Original to ATAS / Copy to Client

AT 3

AMERICAN TECHNICAL & ANALYTICAL SERVICES, Inc.

875 Fee Fee Road • Maryland Heights, MO 63043 • Office (314) 434-4570 • Fax (314) 434-0080

CHAIN OF CUSTODY RECORD

No. 10184

ATAS Client Name: DAMES & MOORE

Project Name: PENTAIR

Project #:

Form Completed By: ERIC FRITSCH

P.O. #:

Type of Analysis: VOC (8260) METALS (Cu/Pb/Zn) TPH (8015 Gas/Diesel) PCB

Sample ID/Location	Sample Date	Sample Time	Sample Matrix	Grab	Comp	No. of Containers	VOC (8260)	METALS (Cu/Pb/Zn)	TPH (8015 Gas/Diesel)	PCB						Collector's Initials	Remarks
MW-7 (5')	11-29-99		SOIL	X		3	X	X	X								
MW-1 (5')	11-29-99		SOIL	X		4	X	X	X	X							
MW-1 (15')	11-29-99		SOIL	X		4											ARCHIVE SAMPLE

Relinquished by:	Received by:	Relinquished by:	Received by:
Signature: [signature]	Signature: [signature]	Signature	Signature
Printed Name: ERIC K. FRITSCH	Printed Name: L. MASSENBERG	Printed Name	Printed Name
Firm: DAMES & MOORE	Firm: ATAS	Firm	Firm
Date/Time: 11-29-99 / 4:38 P.M.	Date/Time: 11-29-99 1640	Date/Time	Date/Time

Samples received unannounced with less than 48 hours holding time and/or ASAP request may be subject to additional surcharges.

Turnaround Requirements
- ___ ASAP
- ___ 5 working days
- ___ 10 working days
- ___ 15 working days
- 7 Day

Temperature

Preservatives
- A-Cold
- B-HNO_3
- C-H_2SO_4
- D-NaOH
- E-HCl
- F-___

SEND RESULTS TO (Name & Company): DAVID HEINZE / DAMES & MOORE

Original to ATAS / Copy to Client

ATA

AMERICAN TECHNICAL & ANALYTICAL SERVICES, Inc.

875 Fee Fee Road • Maryland Heights, MO 63043 • Office (314) 434-4570 • Fax (314) 434-0080

CHAIN OF CUSTODY RECORD

PAGE

No. 10172

ATAS Client Name: Dames & Moore

Project Name: PENTAIR

Project #:

Form Completed By: ERIC PRITSCH

P.O. #:

Sample ID/Location	Sample Date	Sample Time	Sample Matrix	Grab	Comp	No. of Containers	VOC (8260)	METALS (6010/7470)	TPH 8015 (041/042)							Collector's Initials	Remarks
MW-1	11-30-99	2:20	WATER	X		4	X	X	X								FILTER METALS
MW-2		1:20					X	X	X								[redacted] FOR
MW-3		1:05					X	X	X								ALL WATER
MW-4		1:40					X	X	X								SAMPLES.
MW-5		12:40					X	X	X								
MW-6		12:50					X	X	X								
MW-7		2:00					X	X	X								

Relinquished by:	Received by:	Relinquished by:	Received by:
Signature: [signature]	Signature: [signature]	Signature	Signature
Printed Name: ERIC PRITSCH	Printed Name: L. MASSENBERG	Printed Name	Printed Name
Firm: Dames & Moore	Firm: ATAS	Firm	Firm
Date/Time: 11-30-99 / 4:35pm	Date/Time: 11-30-99 1635	Date/Time	Date/Time

Samples received unannounced with less than 48 hours holding time and/or ASAP request may be subject to additional surcharges.

Turnaround Requirements
- ___ASAP
- ___5 working days
- ___10 working days
- ~~15 working days~~
- 7 Day

92° Temperature

Preservatives
- A-Cold
- B-HNO_3
- C-H_2SO_4
- D-NaOH
- E-HCl
- F-_____

SEND RESULTS TO (Name & Company): DAVID HONEE / DAMES & MOORE

Original to ATAS / Copy to Client

AT/

AMERICAN TECHNICAL & ANALYTICAL SERVICES, Inc.

875 Fee Fee Road • Maryland Heights, MO 63043 • Office (314) 434-4570 • Fax (314) 434-0060

CHAIN OF CUSTODY RECORD

No. 11554

ATAS Client Name: Dames + Moore

Project Name: Ventair

Project #:

Form Completed By: Steve Shroff

P.O. #:

Type of Analysis: VOC-8260, Metals, TPH-OR2, PCB (Method 8082)

Sample ID/Location	Sample Date	Sample Time	Sample Matrix	Grab	Comp	No. of Containers	VOC-8260	Metals	TPH-OR2	PCB (Method 8082)						Collector's Initials	Remarks
GP-1-7'	2/5/00	1724	Soil	X		2	X	X	X							SJS	
GP-1-10'		1730		X		2	X	X	X							SJS	
GP-2-10'		1808		X		2	X	X	X							SJS	
GP-2-13'		1813		X		2	X	X	X							SJS	
WBF-1		1800	Wood shavings	X		2				X						EKF	
WBF-2		1815	Wood shavings	X		2				X						EKF	
WBF-3		1830	Wood shavings	X		2				X						EKF	
GP-3-3'		1855	Soil	X		2	X	X	X							SJS	
GP-3-7'		1900		X		2	X	X	X							SJS	
GP-4-3'		2045		X		2	X	X	X							SJS	
GP-4-10'		2050		X		2	X	X	X							SJS	

Relinquished by:	Received by:	Relinquished by:	Received by:
Signature: Steven J. Shroff	Signature: [illegible]	Signature:	Signature:
Printed Name: Steven J. Shroff	Printed Name: WALTER DOBSON	Printed Name:	Printed Name:
Firm: Dames & Moore	Firm: ATAS	Firm:	Firm:
Date/Time: 2/8/00 830	Date/Time: 2-8-00 0830	Date/Time:	Date/Time:

Samples received unannounced with less than 48 hours holding time and/or ASAP request may be subject to additional surcharges.

Turnaround Requirements:
- ___ ASAP
- X 5 working days
- ___ 10 working days
- ___ 15 working days

Preservatives:
- A-Cold
- B-HNO_3
- C-H_2SO_4
- D-NaOH
- E-HCl
- F-____

3.1°C Temperature

SEND RESULTS TO (Name & Company): George Jones @ Dames + Moore

Original to ATAS / Copy to Client

AT

AMERICAN TECHNICAL & ANALYTICAL SERVICES, Inc.

875 Fee Fee Road • Maryland Heights, MO 63043 • Office (314) 434-4570 • Fax (314) 434-0080

CHAIN OF CUSTODY RECORD

No. 11506

ATAS Client Name: Dames + Moore

Project Name: Pentex

Project #:

Form Completed By: Steve Shroff

P.O. #:

Sample ID/Location	Sample Date	Sample Time	Sample Matrix	Grab	Comp	No. of Containers	VOC - 8260	DRO	Metals							Collectors Initials	Remarks
GP-5-3'	2/8/00	2209	Soil	X		2	X	X	X							SP	
GP-5-11'		2218		X		2	X	X	X							SP	
GP-6-6'		2309		X		2	X	X	X							SP	
GP-6-14'		2320		X		2	X	X	X							SP	

Relinquished by:	Received by:	Relinquished by:	Received by:
Signature: Steve J. Shroff	Signature: Walter Dozier	Signature	Signature
Printed Name: Steven J. Shroff	Printed Name: WALTER DOZIER	Printed Name	Printed Name
Firm: Dames + Moore	Firm: ATAS	Firm	Firm
Date/Time: 2/8/00 1530	Date/Time: 2-8-00 0830	Date/Time	Date/Time

Samples received unannounced with less than 48 hours holding time and/or ASAP request may be subject to additional surcharges.

Turnaround Requirements
- ___ ASAP
- X 5 working days
- ___ 10 working days
- ___ 15 working days

3.1°C ___ Temperature

Preservatives
- A-Cold
- B-HNO_3
- C-H_2SO_4
- D-NaOH
- E-HCl
- F-___

SEND RESULTS TO (Name & Company): George Jones D+M

Original to ATAS / Copy to Client

ATAS

AMERICAN TECHNICAL & ANALYTICAL SERVICES, Inc.

875 Fee Fee Road • Maryland Heights, MO 63043 • Office (314) 434-4570 • Fax (314) 434-0080

CHAIN OF CUSTODY RECORD

PAGE 1 OF 2

No. 11566

ATAS Client Name: Dames & Moore

Project Name: Pentair

Project #: 27794-022-045

Form Completed By: Kevin Barnes

P.O. #:

Type of Analysis: VOC-8260, Metals, TPH-0/12/CAI

Sample ID/Location	Sample Date	Sample Time	Sample Matrix	Grab	Comp	No. of Containers	VOC-8260	Metals	TPH-0/12/CAI						Collector's Initials	Remarks
GP-7-4'		1310				2	X	X	X						KJB	
GP-7-8'	2/8/00	1310	Soil	X		2	X	X	X						KJB	
GP-8-6'		1330		X		2	X	X	X						KJB	
GP-8-10		1330		X		2	X	X	X						KJB	
GP-9-4'		1415		X		2	X	X	X						KJB	
GP-7-7'		1415		X		2	X	X	X						KJB	
GP-10-4'		1450		X		2	X	X	X						KJB	
GP-10-10'		1450		X		2	X	X	X						KJB	
GP-11-4'		1545		X		2	X	X	X						KJB	
GP-11-14'		1555		X		2	X	X	X						KJB	
GP-12-4'		1620		X		2	X	X	X						KJB	
GP-12-14'		1620		X		2	X	X	X						KJB	
GP-13-7'		1645		X		2	X	X	X						KJB	

Relinquished by:	Received by:	Relinquished by:	Received by:
Signature: Kevin J. Barnes	Signature: L. Massenberg	Signature:	Signature:
Printed Name: Kevin J. Barnes	Printed Name: L. Massenberg	Printed Name:	Printed Name:
Firm: Dames & Moore	Firm: ATAS	Firm:	Firm:
Date/Time: 2-9-00 0855	Date/Time: 2-9-00 0855	Date/Time:	Date/Time:

Samples received unannounced with less than 48 hours holding time and/or ASAP request may be subject to additional surcharges.

Turnaround Requirements
- ___ ASAP
- X 5 working days
- ___ 10 working days
- ___ 15 working days

Preservatives
- A-Cold
- B-HNO_3
- C-H_2SO_4
- D-NaOH
- E-HCl
- F-____

7.1°C Temperature

SEND RESULTS TO (Name & Company): George Gnes / Dames & Moore

Original to ATAS / Copy to Client

ATAS

AMERICAN TECHNI[illegible] & ANALYTICAL SERVICES, Inc.

875 Fee Fee Road • Maryland Heights, MO 63043-3211 • Office (314) 434-4570 • FAX (314) 434-0060

CHAIN OF CUSTODY RECORD

ATAS Client Name: Dames & Moore

Project Name: Pentair

Project #: 27774-022-045

Form Completed By: Kevin Barnes

PO #:

Type of Analysis: VOC-8260, Metals, TPH-OA2/CN

Lab Use Only — Initials: LM — Date: 2-9-00 — Location: 2 1E6

Sample ID	Sample Date	Sample Time	Sample Matrix	Grab	Comp	No. of Containers	VOC-8260	Metals	TPH-OA2/CN							Remarks	Lab Use Only
GP-13-11'	2/8/00	1645	Soil	X		2	X	X	X								28913.14

Relinquished by:	Received by:	Relinquished by:	Received by:
Signature: Kevin J. Barnes	Signature: [signature]	Signature:	Signature:
Printed Name: Kevin J Barnes	Printed Name: L. Massenberg	Printed Name:	Printed Name:
Firm: Dames & Moore	Firm: ATAS	Firm:	Firm:
Date/Time: 2-9-00 0855	Date/Time: 2-9-00 0855	Date/Time:	Date/Time:

Turnaround Requirements
- ___ ASAP
- X 5 working days
- ___ 10 working days
- ___ 15 working days

Preservative
- A - COLD
- B - HNO_3
- C - H_2SO_4
- D - NaOH
- E - HCl
- F - ___

Temperature: 7.1°C

SEND RESULTS TO (Name & Company): George Jones / Dames & Moore

Original to ATAS/Copy to Client

ATA

AMERICAN TECHNICAL & ANALYTICAL SERVICES, Inc.

675 Fee Fee Road • Maryland Heights, MO 63043 • Office (314) 434-4570 • Fax (314) 434-8080

CHAIN OF CUSTODY RECORD

PAGE 1 OF 1

No. 11553

ATAS Client Name: DAMES & MOORE

Project Name: DENTAR

Project #: 27994-072-045

Form Completed By: ERIC FRITSCH

P.O. #:

Type of Analysis: TPH OA1/OA2 (Method 8015) VOC (Method 8260) RCRA Metals (Method 6010/7470)

Sample ID/Location	Sample Date	Sample Time	Sample Matrix	Grab	Comp	No. of Containers	TPH OA1/OA2 (Method 8015)	VOC (Method 8260)	RCRA Metals (Method 6010/7470)						Collector's Initials	Remarks
MW-12-10'	2-8-00		SOIL	X		2	X	X	X						EKF	
MW-12-27'	2-8-00		SOIL	X		2	X	X	X						EKF	
MW-12-37'	2-8-00		SOIL	X		2									EKF	Archive Sample

Relinquished by:	Received by:	Relinquished by:	Received by:
Signature: [signature]	Signature: [signature]	Signature:	Signature:
Printed Name: ERIC K FRITSCH	Printed Name: L. MASSENBERG	Printed Name:	Printed Name:
Firm: DAMES & MOORE	Firm: ATAS	Firm:	Firm:
Date/Time: 2-9-00 0855	Date/Time: 2-9-00 0855	Date/Time:	Date/Time:

Samples received unannounced with less than 48 hours holding time and/or ASAP request may be subject to additional surcharges.

Turnaround Requirements
- ___ ASAP
- X 5 working days
- ___ 10 working days
- ___ 15 working days

Preservatives
- A-Cold
- B-HNO_3
- C-H_2SO_4
- D-NaOH
- E-HCl
- F-___

7.1°C temperature

SEND RESULTS TO (Name & Company): GEORGE JONES / DAMES & MOORE

Original to ATAS / Copy to Client

ATA

AMERICAN TECHNICAL & ANALYTICAL SERVICES, Inc.

875 Fee Fee Road • Maryland Heights, MO 63043 • Office (314) 434-4570 • Fax (314) 434-0080

CHAIN OF CUSTODY RECORD

No. 11552

ATAS Client Name: Dames & Moore

Project Name: Pentair

Project #: 27994-022-045

Form Completed By: Eric Fritsch

P.O. #:

Type of Analysis: TPH (~~[illegible]~~) Method 8015; VOC (Method 8200); RCRA Metals (Method 6010/7470)

Sample ID/Location	Sample Date	Sample Time	Sample Matrix	Grab	Comp	No. of Containers	TPH	VOC	RCRA Metals						Collector's Initials	Remarks
GP-14-4'	2-9-00	9:15	Soil	X		2	X	X	X						EKF	
GP-14-15		9:45		X		2	X	X	X						EKF	
GP-14-25		10:15		X		2									EKF	Archive Sample
GP-15-4'		10:45		X		2	X	X	X	Analyze per Eric ASAP TAT. JC 2/14/00					EKF	~~Archive Sample~~
GP-15-19'		11:30		X		2	X	X	X						EKF	
GP-15-25'		12:00		X		2									EKF	Archive Sample
MW-8		2:00	Water	X		4	X	X	X						EKF	Filter
MW-10		2:15		X		4	X	X	X						EKF	Metals Sample
MW-11		2:30		X		4	X	X	X						EKF	At the Lab

Relinquished by:	Received by:	Relinquished by:	Received by:
Signature: [signature]	Signature: [signature]	Signature:	Signature:
Printed Name: Eric Fritsch	Printed Name: Walter Doein	Printed Name:	Printed Name:
Firm: [signature]	Firm: ATAS	Firm:	Firm:
Date/Time: 6-9-00 15:50	Date/Time: 2-9-00 1550	Date/Time:	Date/Time:

Samples received unannounced with less than 48 hours holding time and/or ASAP request may be subject to additional surcharges.

Turnaround Requirements
- ASAP
- X 5 working days
- ___ 10 working days
- ___ 15 working days

Preservatives
- A-Cold
- B-HNO_3
- C-H_2SO_4
- D-NaOH
- E-HCl
- F-____

8.8 °C Temperature

SEND RESULTS TO (Name & Company): George Jones / Dames & Moore

Original to ATAS / Copy to Client

ATAS

AMERICAN TECHNICAL & ANALYTICAL SERVICES, Inc.

875 Fee Fee Road • Maryland Heights, MO 63043 • Office (314) 434-4570 • Fax (314) 434-0080

CHAIN OF CUSTODY RECORD

PAGE___OF___

No. 11551

ATAS Client Name: Dames & Moore

Project Name: PENTAIR

Project #: 27994-022-045

Form Completed By: ERIC S. FRITSCH

P.O. #

Sample ID/Location	Sample Date	Sample Time	Sample Matrix	Grab	Comp	No. of Containers	TPH (DRO) 8015	VOC (8260)	RCRA METALS (6010/7470)	Collector's Initials	Remarks
GP-3	2-10-00	10:30	WATER	X			X	X	X	SKF	FILTER ALL
GP-10	2-10-00	12:20		X			X	X	X	SKF	METALS, SAMPLES
GP-11	2-10-00	12:40		X			X	X	X	SKF	
GP-9	2-10-00	12:55		X			X	X	X	SKF	
GP-12	2-10-00	13:20		X			X	X	X	SKF	
GP-2	2-10-00	13:30		X			X	X	X	SKF	
GP-6	2-10-00	13:50		X			X	X	X	SKF	
GP-14	2-10-00	14:15		X			X	X	X	SKF	

ASAP TURN-TIME

Relinquished by:	Received by:	Relinquished by:	Received by:
Signature: [signature]	Signature: [signature]	Signature	Signature
Printed Name: ERIC K. FRITSCH	Printed Name: L. MESSENGER	Printed Name	Printed Name
Firm: Dames & Moore	Firm: ATAS	Firm	Firm
Date/Time: 2-10-00 1655	Date/Time: 2-10-00 1655	Date/Time	Date/Time

Samples received unannounced with less than 48 hours holding time and/or ASAP request may be subject to additional surcharges.

Turnaround Requirements: ASAP; 5 working days; 10 working days; 15 working days

Preservatives: A-Cold; B-HNO_3; C-H_2SO_4; D-NaOH; E-HCl; F-____

16.5°C Temperature

SEND RESULTS TO (Name & Company): GEORGE JONES / DAMES & MOORE

Original to ATAS / Copy to Client