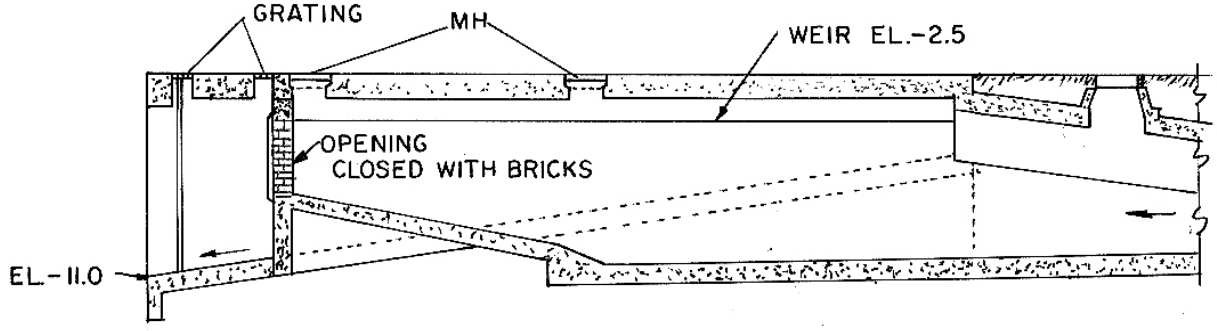

SECTION A-A
N.T.S

BAFFLE WALL @ THOMAS AVE
SEE DWG 56419 (Griffith PS)

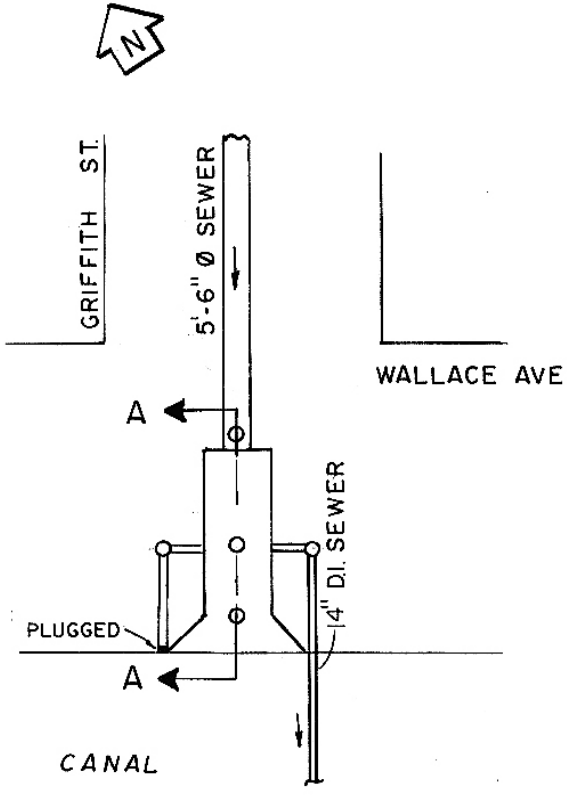

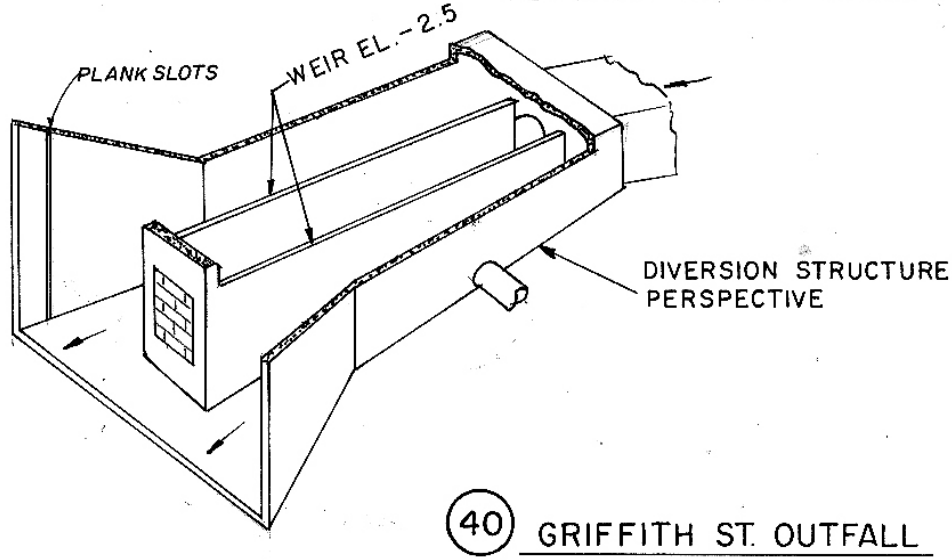

(40) GRIFFITH ST. OUTFALL
REF: B25358, 56398