35-10-204

CP-5435202
52% ENTRAINMENT SEPARATOR
SIZE: 16'-6" DIA x 20' S/S
DES PRESS @ TEMP: 20 PSIG/FV @ 200°F
MATL: RLCS
TRIM: HASTELLOY C
INSULATION: NONE

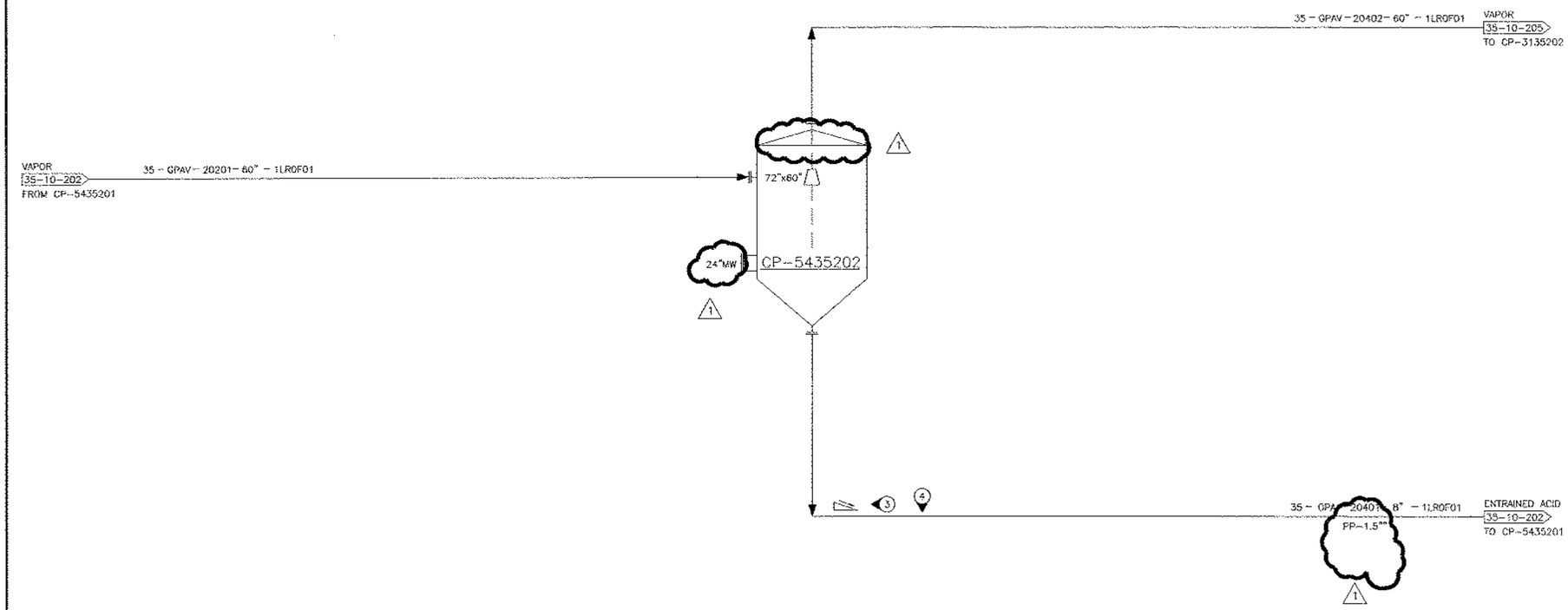

NOTES:

1. FOR GENERAL NOTES AND SYMBOLS, REFER TO DRAWING NOS. 35-10-098, 35-10-099.
2. LOCATE VALVES AS CLOSE TO TEES AS POSSIBLE.
3. MAX. SLOPE.
4. NO POCKETS.

L#20402

JACOBS ENGINEERING®
Engineers and Constructors
P.O. Box 2008, Lakeland, Florida 33806-2008 Hwy. 903 @ SR 540, Lakeland Florida 33813
Tel: (941) 665-1551 Fax (941) 665-5363

FMC CORPORATION
FES - Princeton, NJ

REV	ZONE	DESCRIPTION	BY	CKD	DATE	APPD	APPD	APPD	REV	ZONE	DESCRIPTION	BY	CKD	DATE	APPD	APPD	APPD
									1		ISSUED FOR HAZOPS						
									0		ISSUE FOR DESIGN	CGH	JME	10/25/99	JME	ALG	

(cont)

This drawing, including all information thereon, is FMC property, is confidential, and must not be used, made public, or copied unless authorized by FMC. It is subject to return upon demand. FMC Corporation

APPROVED FOR CONSTRUCTION
SIGNATURE DATE
APPROVED FOR CONSTRUCTION
SIGNATURE DATE
APPROVED FOR CONSTRUCTION
SIGNATURE DATE

PROJ. MGR. J. KORETCHKO
CHECKER
DIST. LEAD
ORIGINATOR P. WATERS
DATE 5/4/99
CAD FILE 35102041

FMC PURIFIED PHOSPHORIC ACID PLANT AT AGRIUM-CONDA PHOSPHATES FLUOROSILICIC ACID PIPING & INSTRUMENTATION DIAGRAM

SCALE	ORDER NO.	DRAWING NO.	REV.
NONE	28-T424-10	35-10-204	1

EXHIBIT B

AGR-CBI_003892
SUBJECT TO ALL APPLICABLE CONFIDENTIAL BUSINESS INFORMATION PRIVILEGES