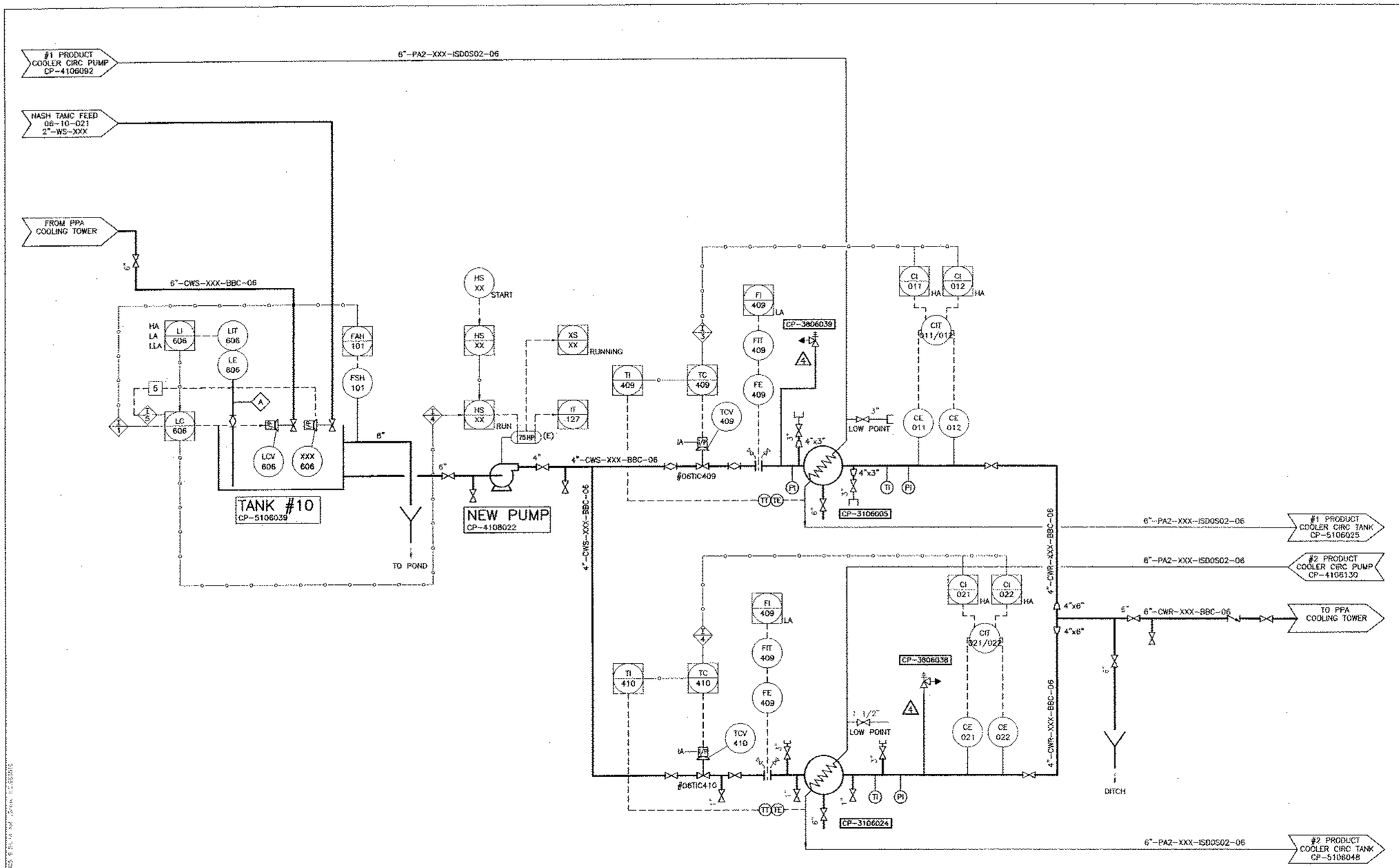

CP-3106005
NO.1 SPA COOLER
712- 1" TUBES
2-PASS
316L TUBE/CS SHELL
1864 ft2

CP-3106024
NO.2 SPA COOLER
356- 1" TUBES
1-PASS
316L TUBE/CS SHELL
1864 ft2

CP-3806039
EXPANSION RELIEF VALVE
KUNKE 9168DDE06
SET PRESSURE: 85 PSIG
7 GPM

CP-3806038
EXPANSION RELIEF VALVE
KUNKE 9168FEE06
SET PRESSURE: 85 PSIG
7 GPM

GENERAL NOTES

INTERLOCKS:

1. FLOW ALARM HIGH CLOSES VALVE 606
2. SENSE HIGH HIGH CONDUCTIVITY CLOSE VALVE 410
3. SENSE HIGH HIGH CONDUCTIVITY CLOSE VALVE 409
4. SHUT PUMP 022 DOWN ON LOW LEVEL
5. VALVE 606 CLOSE OPENS VALVE XXX RUNS ON TANK 10 LEVEL

DESCRIPTION	INPUT	ALARM	CLOSE INLET VALVE	PUMP RUNNING
TANK 10 LEVEL	HIGH LEV	YES		YES
	LOW LEV	YES		YES
	LOW-LOW LEV	YES		
TANK 10 OVERFLOW SWITCH #1	FLOW		YES	YES
TANK 10 OVERFLOW SWITCH #2	FLOW	YES		YES
PUMP	START			YES
	STOP			
	RUNNING			YES
	AMPS			YES
#1 COOLER FLOW	LOW	YES		YES
#1 COOLER CONDUCTIVITY #1	HIGH	YES	YES	YES
#1 COOLER CONDUCTIVITY #2	HIGH	YES	YES	YES
#2 COOLER FLOW	LOW	YES		YES
#2 COOLER CONDUCTIVITY #1	HIGH	YES	YES	YES
#2 COOLER CONDUCTIVITY #2	HIGH	YES	YES	YES

DCS I/O
XX

LA – LOW ALARM
LLA – LOW/LOW ALARM
HA – HIGH ALARM
HHA – HIGH/HIGH ALARM

---- – ELEC SIGNAL
—o— – SOFTWARE LINK
—— – PNEUMATIC SIGNAL
(E) – EXISTING
(N) – NEW
IA – INSTRUMENT AIR

Drawing No.	Description
Reference Drawing	

No.	Date	Revision	Dwn.	Chk'd.	App'd.
4	7/18/05	ADDED RELIEF VALVES	JSS		
3	3/16/05	AS BUILTS	JSS		
2	8/31/04	ADDED VALVES	JSS		
1	02/27/03	AS-BUILT	KHA	JIR	JIR
0	12/9/02	ISSUED FOR CONSTRUCTION	JSS	JIR	JIR

Agrium
3010 CONDA ROAD
SODA SPRINGS, ID. 83276

PHOS ACID
SPA COOLERS TO PPA TOWER
P&ID

Dwn.: JSS | Chk'd.: | Drawing No.: 06-10-022 | Rev. 4
Approved:
Project No.:
Scale: NONE | Sheet 1 of 1

NOTICE
THIS DRAWING IS THE PROPERTY OF AGRIUM CPO, INC. AND IS LENT TO THE BORROWER FOR HIS CONFIDENTIAL USE ONLY AND IS SUBJECT TO RETURN UPON REQUEST AND SHALL NOT BE REPRODUCED, COPIED, LENT OR OTHERWISE DISPOSED OF DIRECTLY OR INDIRECTLY, NOR USED FOR ANY PURPOSE OTHER THAN THAT FOR WHICH IT IS SPECIFICALLY FURNISHED.

EXHIBIT B

SUBJECT TO ALL APPLICABLE CONFIDENTIAL BUSINESS INFORMATION PRIVILEGES