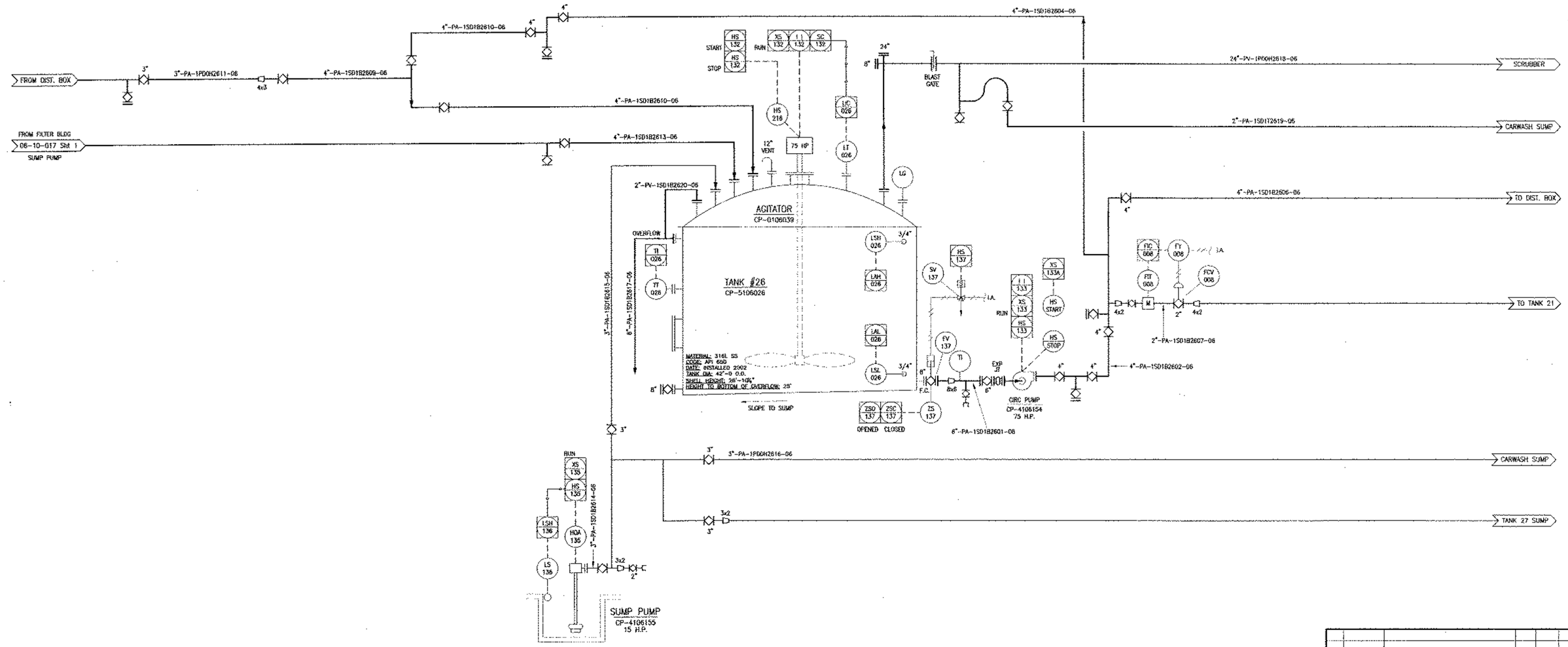

FLUID CATEGORY LIST
PV - PROCESS VAPOR — SCRUBBER FUMES
PA - PHOSPHORIC ACID — ALL SPA & ALL SPA STREAMS

LINES
LINE SIZE-FLOWING MEDIUM-LINE NO.-CONST. AREA

PIPE CONSTRUCTION LIST
SD - 316L STAINLESS STEEL
PD - HDPE (DRISCO PIPES)
NU - ALLOY 20

CONSTRUCTION AREA
06

No.	Date	Revision	Dwn.	Chk'd.	App'd.
4	3/1/04	REDRAWN. CHG'D INSTR. #'s	EM		

NOTICE

THIS DRAWING IS THE PROPERTY OF AGRIUM CPO, INC. AND IS LENT TO THE BORROWER FOR ITS CONFIDENTIAL USE ONLY AND IS SUBJECT TO RETURN UPON REQUEST AND SHALL NOT BE REPRODUCED, COPIED, LENT OR OTHERWISE DISPOSED OF DIRECTLY OR INDIRECTLY, NOR USED FOR ANY PURPOSE OTHER THAN THAT FOR WHICH IT IS SPECIFICALLY FURNISHED.

Agrium

CONDA PHOSPHATE OPERATION
3010 CONDA ROAD
SODA SPRINGS, ID 83276

PHOS ACID
TANK 26
PIPING & INSTR. DIAGRAM

Drawn By: EM	1/30/04	Drawing No.: 06-10-018	Rev. 4
Approved: –			
Scale: N/A			
Project No.: –		Sheet 1 of 1	