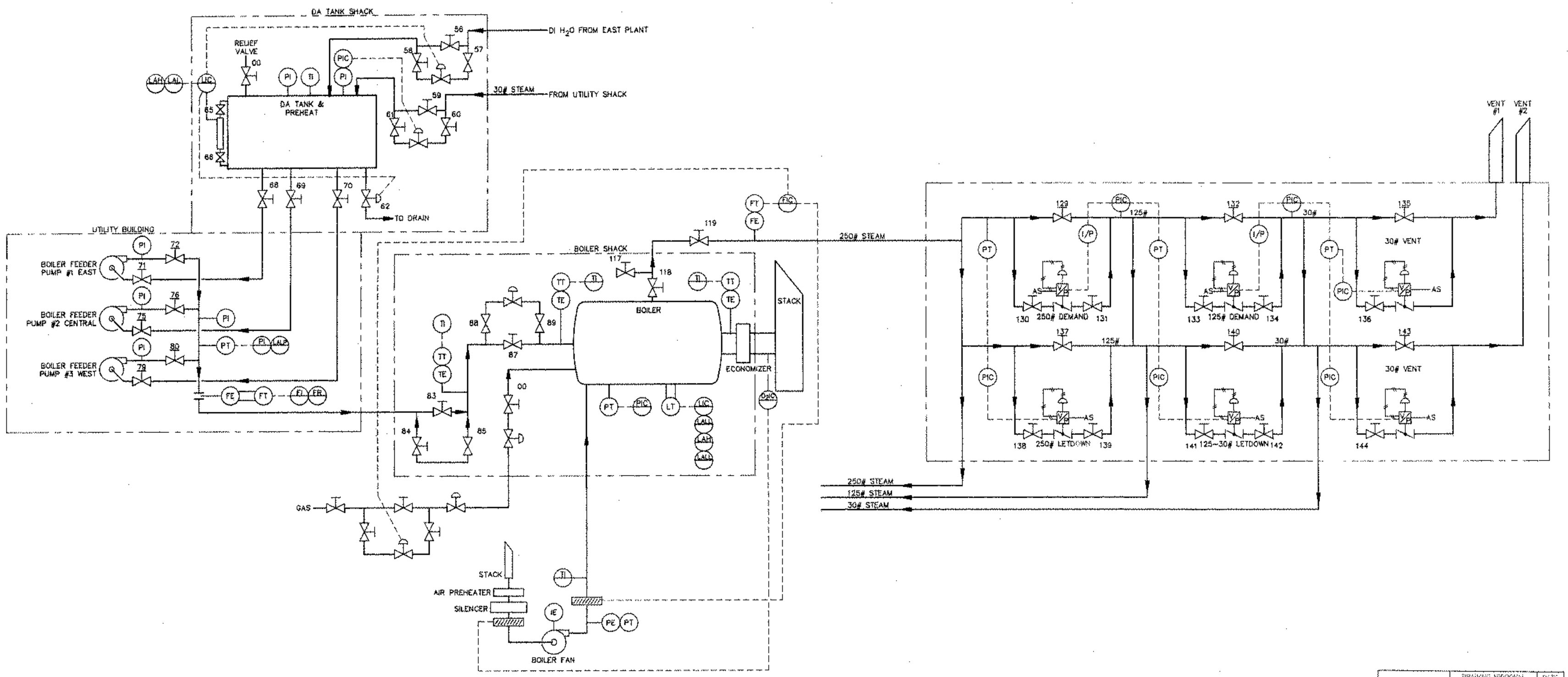

STEAM PLANT

	DRAWING APPROVAL	DATE
PROJECT MANAGER		
ENGINEERING		
OPERATIONS		
MAINTENANCE		
SUPERVISOR		
RISK MANAGEMENT		
DRAFTING MGR.	[signature]	12/1/03

NOTICE

THIS DRAWING IS THE PROPERTY OF AGRIUM CPO, INC. AND IS LENT TO THE BORROWER FOR HIS CONFIDENTIAL USE ONLY AND IS SUBJECT TO RETURN UPON REQUEST AND SHALL NOT BE REPRODUCED, COPIED, LENT OR OTHERWISE DISPOSED OF DIRECTLY OR INDIRECTLY, NOR USED FOR ANY PURPOSE OTHER THAN THAT FOR WHICH IT IS SPECIFICALLY FURNISHED.

PRINT RECORD

NO.	DATE	TO	NO.	DATE	TO

REFERENCE DRAWINGS

REVISIONS

NO.	DATE	BY	DESCRIPTION	APR.
10	1/9/02	RA	ADDED VALVE NUMBERS	
11	02/19/03	KHA	ADDED DWG NUMBER FOR FILES	

ENG. RECORD		DATE
DRAWN BY	AJH	2/25/98
TRACED BY		
CHECKED BY		
APPROVED BY		
M.O. NO.		
SCALE	NONE	

Agrium AGRIUM CPO INC.
3010 CONDA RD. SODA SPRINGS, ID 83276

NORTH SULFURIC ACID PLANT
STEAM PLANT (NSP-04)

DWG NO. 08-10-010 (11) REV

Drawing Name and Location: R:\DWGS\DRAWINGS\08- NORTH SULFURIC\10\08-10-010.dwg Last accessed: Feb 19, 2003-11:57am by: kadams

C:\My Files\Agrium\NSP-04.dwg Date: 04Mar1998 08:23a.m.

EXHIBIT B

AGR-CBI_003933
SUBJECT TO ALL APPLICABLE CONFIDENTIAL BUSINESS INFORMATION PRIVILEGES