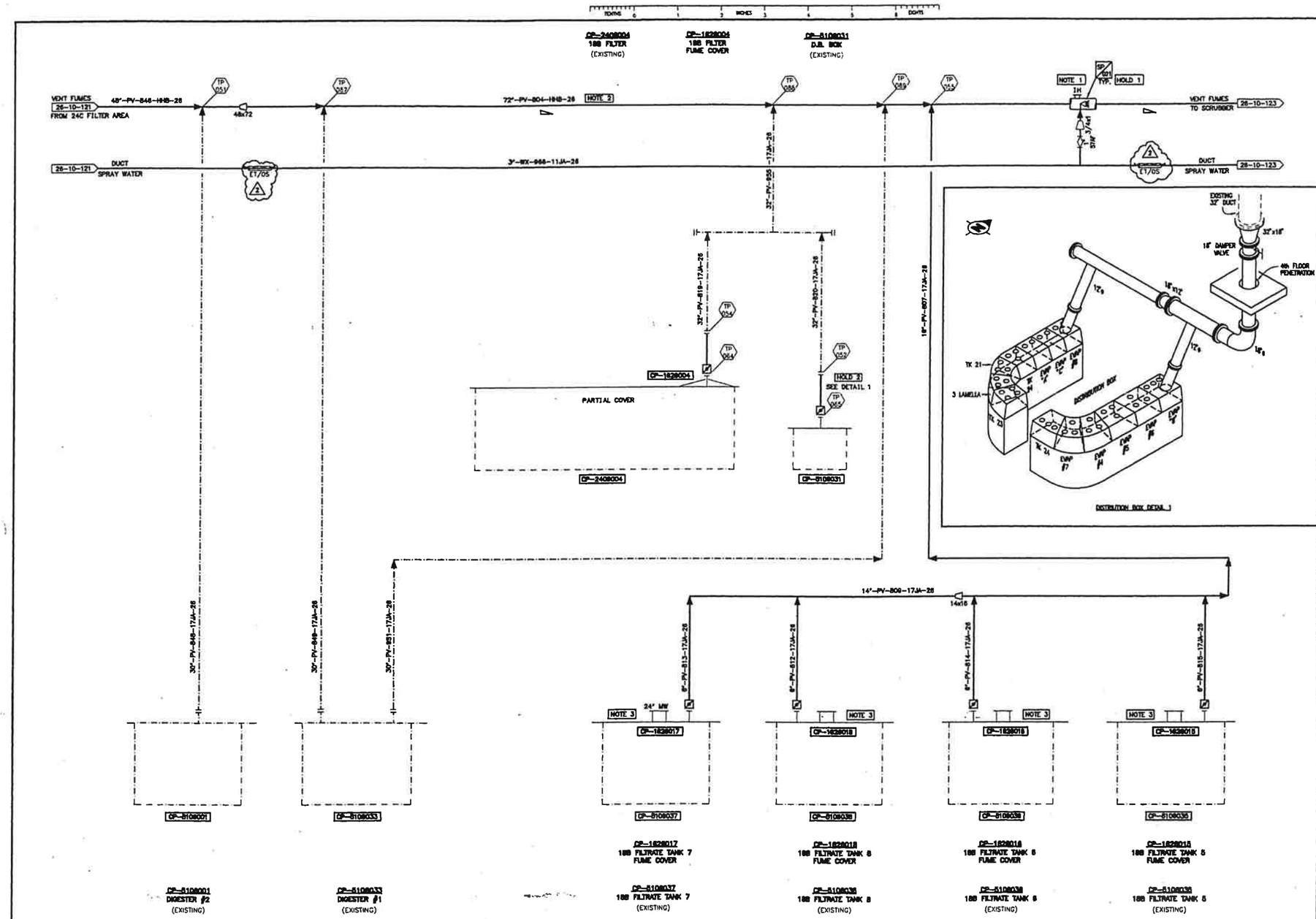

GENERAL NOTES

1. SPRAY WASH TYPICAL EVERY 10 FT. USE BETE WT RIGHT ANGLE HOLLOW CONE SPRAY NOZZLES MODEL 3/4" WT 2000, 90°, TEFLON FOR 10 GPM @ 10 PSIG.
2. EXISTING 72" WILL BE REPLACED.
3. OPENINGS IN TANK COVER TO ACCOMODATE ENTRY OF EXISTING PIPING TO BE MADE IN FIELD BY NU-WEST.
4. LATERAL CONNECTIONS SHALL BE USED ON DUCTING WHEREVER POSSIBLE (IN DIRECTION OF FLOW).

HOLDS

2. DISTRIBUTION BOX PIPING REDESIGN TO BE CONFIRMED (DJK / CRH).

EQUIPMENT ON THIS DRAWING

EQUIP. NO.	DESCRIPTION	STATUS
CP-1828004	188 FILTER FUME COVER	
CP-1828015	188 FILTRATE TANK 5 FUME COVER	NEW
CP-1828016	188 FILTRATE TANK 6 FUME COVER	NEW
CP-1828017	188 FILTRATE TANK 7 FUME COVER	NEW
CP-1828018	188 FILTRATE TANK 8 FUME COVER	NEW
CP-2408004	188 FILTER	EXIST
CP-8108001	DIGESTER #2	EXIST
CP-8108031	D.B. BOX	EXIST
CP-8108033	DIGESTER #1	EXIST
CP-8108035	188 FILTRATE TANK 5	EXIST
CP-8108036	188 FILTRATE TANK 6	EXIST
CP-8108037	188 FILTRATE TANK 7	EXIST
CP-8108038	188 FILTRATE TANK 8	EXIST

ISSUED FOR CONSTRUCTION

DESTROY PREVIOUS PRINTS

AGRA Monenco
CALGARY
ISSUE
FEB 26 2001

NU-WEST INDUSTRIES INC.
3010 CONDA ROAD SODA SPRINGS, ID 83276

AGRA Monenco
ENGINEERING GLOBAL SOLUTIONS

CPO EXPANSION PROJECT
P&ID PHASE 2
VENTILATION DUCTING
SHEET 2

AGRA MONENCO DWG. NO. Y600D-400-6-102
PROJECT NO. Y600D
SCALE NTS
DRAWING NO. 26-10-122
REV. 2

CLIENT APPROVAL BY CRH DATE 00/06/01

REV.	REVISION DESCRIPTION	DATE	DRAWN BY	DESIGNED BY	DWG. CHECK	DESIGN CHECK	LEAD ENG./ DCPL. MGR.	F. ENG./ PROJ. MGR.
2	REVISED AS NOTED	01/02/26	TDV					
1	SP ITEMS REMOVED, OTHER REVISIONS AS NOTED, RE-ISSUED FOR CONSTRUCTION	00/12/08	PRC	SSK	RAJM	RR	RR	LAF
C	ISSUED FOR CONSTRUCTION	00/05/31	AB	SSK	RKW	RR		
B	GENERAL REVISIONS	00/04/27	AB	SSK	RKW	RR		
A	ISSUED FOR TIE-IN REVIEW	00/03/28	RK	SSK	RKW	RR		

NO.	DWG. NO.	REFERENCE DRAWINGS
8		
7		
6		
5		
4		
3	26-10-123	PHASE 2 VENTILATION DUCTING SHEET 3
2	26-10-121	PHASE 2 VENTILATION DUCTING SHEET1
1	09-10-100	STANDARDS P&ID SYMBOLS

ENGINEERING REVIEW		
F. ENG./ PROJ. MGR.	LAF	00/06/01
LEAD ENG./ DCPL. MGR.	RR	00/06/01
DESIGN CHECK	RR	00/03/20
DWG. CHECK	RAJM	00/03/28
DESIGNED BY	SSK	00/03/20
DRAWN BY	RK	00/02/15

THIS DRAWING IS THE PROPERTY OF AGRA MONENCO INC. AND HAS BEEN RELEASED FOR CONFIDENTIAL USE ONLY. IT IS NOT TO BE COMMUNICATED OR DISCLOSED TO OTHERS OR TO BE COPIED IN WHOLE OR IN ANY PART EXCEPT WITH THE PRIOR WRITTEN PERMISSION OF AGRA MONENCO INC.

CAD FILE NAME: G:\Y6000\CAD\PIP\PRC\AGRAP&ID\4006102.dwg
LAST UPDATE: 01/03/22 8:32am

EXHIBIT B

AGR-CBI_003883
SUBJECT TO ALL APPLICABLE CONFIDENTIAL BUSINESS INFORMATION PRIVILEGES

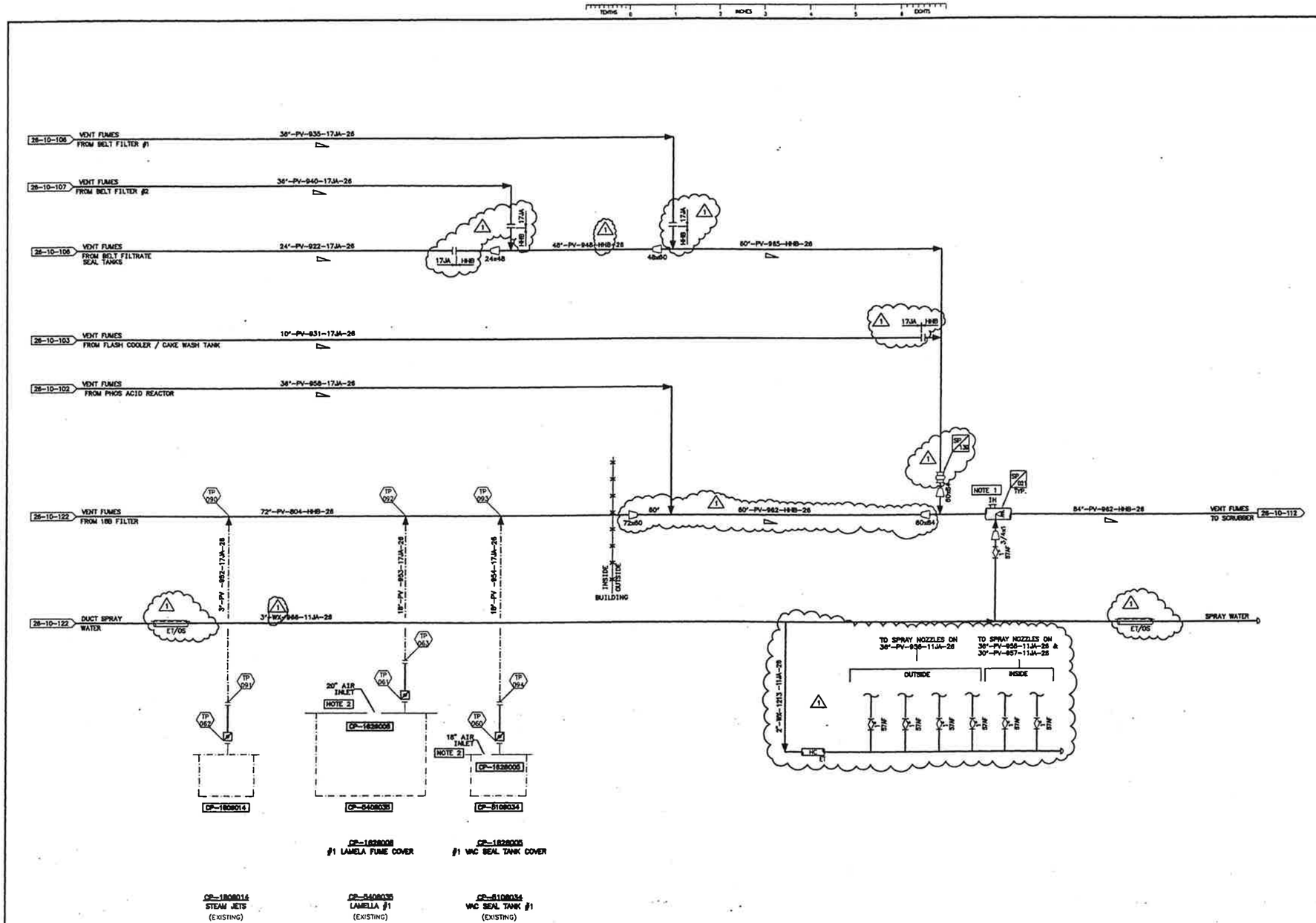

GENERAL NOTES

1. SPRAY WASH TYPICAL EVERY 10 FT. USE BETE WT RIGHT ANGLE HOLLOW CONE SPRAY NOZZLES MODEL 3/4" BT 2000, 90°, TEFLON FOR 10 GPM @ 10 PSIG.
2. OPENINGS IN TANK COVER TO ACCOMODATE ENTRY OF EXISTING PIPING TO BE MADE IN FIELD BY NU-WEST.
3. LATERAL CONNECTIONS SHALL BE USED ON DUCTING WHEREVER POSSIBLE (IN DIRECTION OF FLOW).

HOLDS

EQUIPMENT ON THIS DRAWING

EQUIP. NO.	DESCRIPTION	STATUS
CP-1628005	#1 VAC SEAL TANK COVER	NEW
CP-1628008	#1 LAMELLA FUME COVER	NEW
CP-1608014	STEAM JETS	EXIST
CP-8108034	VAC SEAL TANK #1	EXIST
CP-8408035	LAMELLA #1	EXIST

ISSUED FOR CONSTRUCTION

DESTROY PREVIOUS PRINTS

AGRA Monenco CALGARY ISSUE DEC 08 2000

CAD FILE NAME: 4006103

LAST UPDATE: 00/12/08

NU-WEST INDUSTRIES INC. 3010 CONDA ROAD SODA SPRINGS, ID 83276

AGRA Monenco ENGINEERING GLOBAL SOLUTIONS

CPO EXPANSION PROJECT
P&ID PHASE 2
VENTILATION DUCTING
SHEET 3

AGRA MONENCO DWG. NO. Y600D-400-6-103

PROJECT NO. Y600D | SCALE NTS | DRAWING NO. 26-10-123 | REV. 1

CLIENT APPROVAL BY CRH DATE 00/06/01

REV.	REVISION DESCRIPTION	DATE	DRAWN BY	DESIGNED BY	ENG. CHECK	DESIGN CHECK	LEAD ENG./DEPT. MGR.	P. ENG./PROJ. MGR.
1	REVISED AS NOTED RE-ISSUED FOR CONSTRUCTION	00/12/08	PRC	SSK	RAJM	RR		
0	ISSUED FOR CONSTRUCTION	00/06/06	AB	SSK	RAJM	RR	RR	LAF
C	GENERAL REVISIONS	00/05/31	AB	SSK	RAJM	RR		
B	GENERAL REVISIONS	00/04/27	AB	SSK	RAJM	RR		
A	ISSUED FOR TIE-IN REVIEW	00/03/28	RK	SSK	RAJM	RR		

NO.	DWG. NO.	REFERENCE DRAWINGS
8		
7	26-10-122	PHASE 2 VENTILATION DUCTING SHEET 2
6	26-10-112	PHOS ACID SCRUBBER
5	26-10-107	PHOS ACID BELT #2
4	26-10-106	PHOS ACID BELT #1
3	26-10-103	PHOS ACID FLASH COOLERS PRECONDENSERS
2	26-10-102	PHOS ACID REACTOR
1	05-1-100	STANDARD P&ID SYMBOLS

ENGINEERING REVIEW

P. ENG./PROJ. MGR.	LAF	00/06/08
LEAD ENG./DEPT. MGR.	RR	00/06/08
DESIGN CHECK	RR	00/03/20
ENG. CHECK	RAJM	00/03/28
DESIGNED BY	SSK	00/03/20
DRAWN BY	RK	00/02/15

THIS DRAWING IS THE PROPERTY OF AGRA MONENCO INC. AND HAS BEEN RELEASED FOR CONFIDENTIAL USE ONLY. IT IS NOT TO BE COMMUNICATED OR DISCLOSED TO OTHERS OR TO BE COPIED IN WHOLE OR IN ANY PART EXCEPT WITH THE PRIOR WRITTEN PERMISSION OF AGRA MONENCO INC.

EXHIBIT B

AGR-CBI_003884
SUBJECT TO ALL APPLICABLE CONFIDENTIAL BUSINESS INFORMATION PRIVILEGES

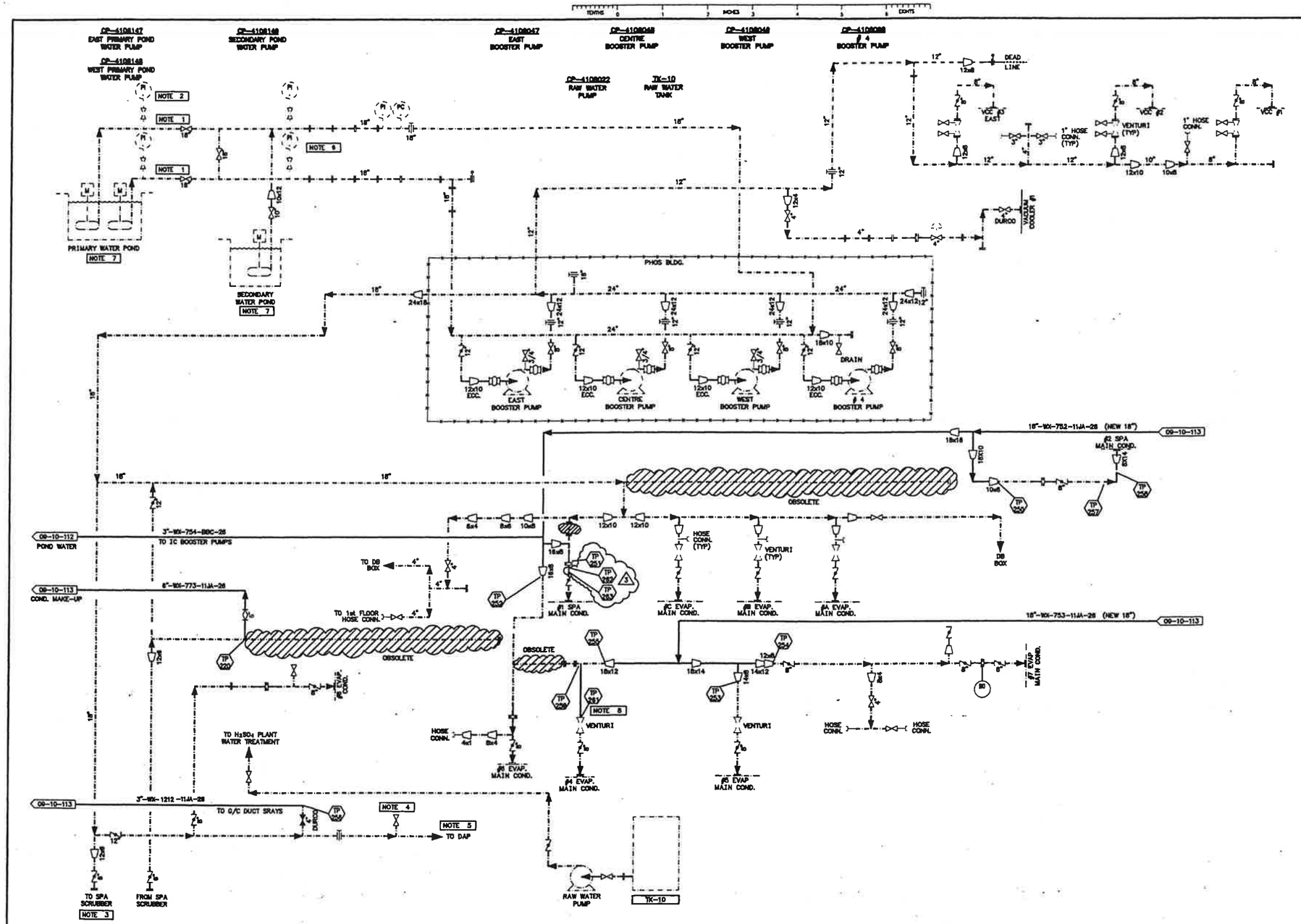

GENERAL NOTES

1. LINE ELEVATION VARIES CONSTANTLY (PIPE RUNS ON GROUND.)
2. PI's DOWNSTREAM OF SECONDARY PUMP INSTALLED WITH AIR BLEEDS. (HIGH POINT.)
3. SPA SCRUBBER TIE-IN MADE 2-22-00.
4. FLOW (AS NEEDED) TO SILICA BUILDING.
5. IN SUMMERTIME FLOW TO DAP MAY BE 0 GPM.
6. PI's INSTALLED WITH HIGH POINT AIR BLEED.
7. PONDS WATER LEVEL VARIES.
8. EXISTING 8" FIBREWOUND LINE TO BE REPLACED WITH A NEW 8" DR11 PIPE.
9. THIS DRAWING WAS PREVIOUSLY ISSUED AS "EXISTING POND WATER SUPPLY P & ID"

HOLDS

3

EQUIPMENT ON THIS DRAWING

EQUIP. NO.	DESCRIPTION	STATUS
CP-4108047	EAST BOOSTER PUMP	EXIST.
CP-4108048	CENTER BOOSTER PUMP	EXIST.
CP-4108049	WEST BOOSTER PUMP	EXIST.
CP-4108088	#4 BOOSTER PUMP	EXIST.
CP-4108147	EAST PRIMARY POND WATER PUMP	EXIST.
CP-4108148	SECONDARY POND WATER PUMP	EXIST.
CP-4108149	WEST PRIMARY POND WATER PUMP	EXIST.
CP-4108022	RAW WATER PUMP	EXIST.
TK-10	RAW WATER TANK 3	EXIST.

DESTROY PREVIOUS PRINTS

AGRA Monenco
CALGARY
ISSUE
FEB 26 2001

CAD FILE NAME: G:\Y600D\CAD\PIP\PRC\AGRAP26D\Y600D115.dwg

LAST UPDATE: 01/03/22 9:07am

NU-WEST INDUSTRIES INC.
3010 CONDA ROAD SODA SPRINGS, ID 83276

REV.	REVISION DESCRIPTION	DATE	DRAWN BY	DESIGNED BY	DWG. CHECK	DESIGN CHECK	LEAD ENG./ DEPT. MGR.	P. ENG./ PROJ. MGR.
3	REVISED AS NOTED	01/02/26	TDV	SSK				
2	REVISED AS NOTED AND ISSUED FOR APPROVAL	01/02/05	PRC	SSK	RAJM	RAJM	RR	LAF
1	ISSUED FOR CONSTRUCTION	00/12/08	PRC					
0	AS BUILT	00/10/04	PRC					

NO.	DWG. NO.	REFERENCE DRAWINGS
8		
7		
6		
5		
4		
3		
2		
1		

ENGINEERING REVIEW

P. ENG./ PROJ. MGR.		
LEAD ENG./ DEPT. MGR.		
DESIGN CHECK		
DWG. CHECK		
DESIGNED BY		
DRAWN BY	AB	00/03/28

THIS DRAWING IS THE PROPERTY OF AGRA MONENCO INC. AND HAS BEEN RELEASED FOR CONFIDENTIAL USE ONLY. IT IS NOT TO BE COMMUNICATED OR DISCLOSED TO OTHERS OR TO BE COPIED IN WHOLE OR IN ANY PART EXCEPT WITH THE PRIOR WRITTEN PERMISSION OF AGRA MONENCO INC.

CLIENT APPROVAL BY CRH DATE 10-11-00

AGRA MONENCO DWG. NO. Y600D-900-6-115

PROJECT NO. Y600D

SCALE NONE

AGRA Monenco
ENGINEERING GLOBAL SOLUTIONS

CPO EXPANSION PROJECT
CONDENSER COOLING WATER
SUPPLY SYSTEM
P&ID NOTE 9

DRAWING NO. 26-10-124

REV. 3

EXHIBIT B

AGR-CBI_003885
SUBJECT TO ALL APPLICABLE CONFIDENTIAL
BUSINESS INFORMATION PRIVILEGES

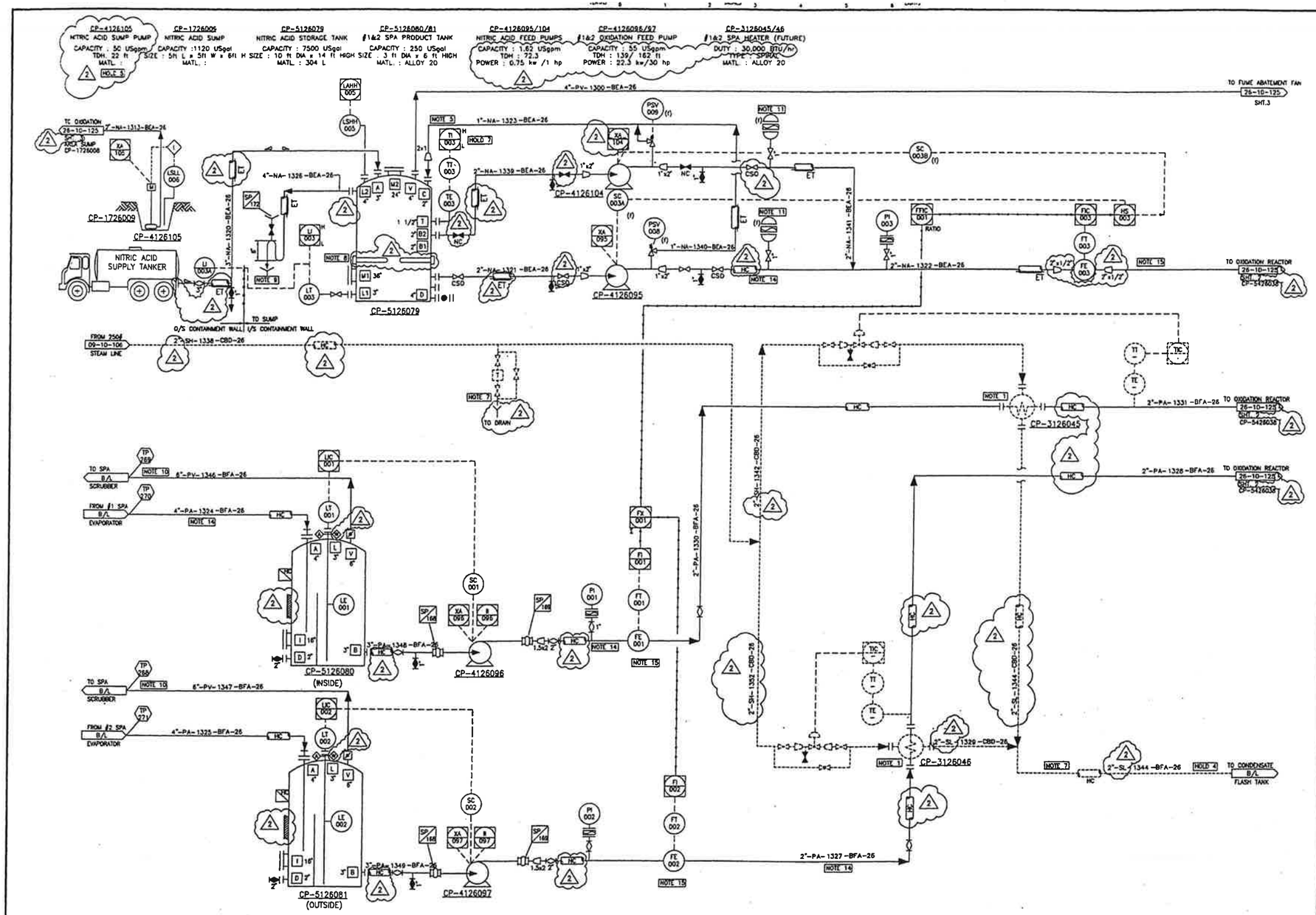

GENERAL NOTES

1. INSTALL SPOOL PIECE IN SPA LINE TO ALLOW FOR FUTURE INSTALLATION OF SPA HEATER.
2. NOTE MOVED TO 26-10-125 SHT 2
3. NOTE MOVED TO 26-10-125 SHT 2
4. DELETED
5. DELETED
6. PIPING TO PROVIDE HIGH POINT VENTS AND LOW POINT DRAINS BASED ON LAYOUT.
7. CONNECT TO CONDENSATE LINE DOWNSTREAM OF HEATERS.
8. TANK EQUIPED WITH IMMERSION HEATERS
9. PROVIDE MINIMUM 6" LIQUID SEAL IN OVERFLOW SEAL LEG AND PIPE TO TRENCH LEADING TO SUMP. PROVIDE ELECTRICAL HEAT TAPE TO SEAL LEG TO PREVENT LIQUID FROM FREEZING. LOCATE AT GRADE WITH VALVE AND FILL FUNNEL AT 3'-0" ELEVATION.
10. TIE INTO LINES FROM EXISTING PRODUCT TANKS. HOLD 6
11. PULSATION DAMPENER SUPPLIED LOOSE WITHOUT VALVE, WITH 1" NPTF CONNECTION.
12. NOTE MOVED TO SHT. 2
13. NOTE MOVED TO 26-10-125 SHT. 2.
14. INSTALL FLANGE COVERS ON ALL PIPING CARRYING NITRIC ACID AND HOT SPA.
15. LOCATE FLOWMETER CLOSE TO REACTOR.

HOLDS

4. DESTINATION OF CONDENSATE (CRH)
5. VENDOR INFORMATION (WT)

LEGEND

---------- FUTURE

EQUIPMENT ON THIS DRAWING

EQUIPMENT No.	DESCRIPTION	STATUS
CP-3126045	No. 1 SPA HEATER (FUTURE)	NEW
CP-3126046	No. 2 SPA HEATER (FUTURE)	NEW
CP-4126095	NITRIC ACID FEED PUMP	NEW
CP-4126104	NITRIC ACID FEED PUMP	NEW
CP-4126105	NITRIC ACID SUMP PUMP	NEW
CP-1726009	NITRIC ACID SUMP	NEW
CP-4126096	No.1 OXIDATION FEED PUMP	NEW
CP-4126097	No.2 OXIDATION FEED PUMP	NEW
CP-5126079	NITRIC ACID STORAGE TANK	NEW
CP-5126080	No. 1 SPA PRODUCT TANK	NEW
CP-5126081	No. 2 SPA PRODUCT TANK	NEW

DESTROY PREVIOUS PRINTS

ISSUED
FOR CONSTRUCTION

AGRA Monenco
CALGARY
ISSUE
JUNE 19 2001

REV.	REVISION DESCRIPTION	DATE	DRAWN BY	DESIGNED BY	DWG. CHECK	DESIGN CHECK	LEAD ENG./ DEPT. MGR.	P. ENG./ PROJ. MGR.
2	RE-ISSUED FOR REVISION	01/06/19	TDV	SK	SK			
1	REVISED AS NOTED/ DRAWING SPLIT INTO A AND B	01/04/30	TL	RR	RR	SK	SK	LAF
0	ISSUED FOR CONSTRUCTION	01/03/15	TL	RR	RR	RAJM	RAJM	LAF
C	ISSUED FOR DESIGN/HAZOP	01/01/10	PRC	RR	RR	RAJM		
B	ISSUED FOR CLIENT APPROVAL	00/12/19	PRC	RR	RR			
A	ISSUED FOR INFORMATION/COMMENT	00/12/05	PRC	RR	RR			

NO.	DWG. NO.	REFERENCE DRAWINGS
8		
7		
6		
5		
4	26-10-125	UNCALCINED ORE OXIDATION P&ID SHEET 2 OF 3 & 3 OF 3
3	26-10-011	UNCALCINED ORE OXIDATION P&ID SHEET 1 OF 2 & 2 OF 2
2	09-10-106	STEAM AND CONDENSATE UTILITY P&ID
1	00-10-100	STANDARD P&ID SYMBOLS

ENGINEERING REVIEW		
P. ENG./ PROJ. MGR.	LAF	01/03/15
LEAD ENG./ DEPT. MGR.	RAJM	01/03/15
DESIGN CHECK	RAJM	00/12/05
DWG. CHECK	RR	00/12/05
DESIGNED BY	RR	00/11/30
DRAWN BY	PRC	00/12/01

THIS DRAWING IS THE PROPERTY OF AGRA MONENCO INC. AND HAS BEEN RELEASED FOR CONFIDENTIAL USE ONLY. IT IS NOT TO BE COMMUNICATED OR DISCLOSED TO OTHERS OR TO BE COPIED IN WHOLE OR IN ANY PART EXCEPT WITH THE PRIOR WRITTEN PERMISSION OF AGRA MONENCO INC.

CLIENT APPROVAL BY CBI DATE 01/01/03

AGRA MONENCO DWG. NO. Y600D-704-6-003

PROJECT NO. Y600D | SCALE NTS

NU-WEST INDUSTRIES INC.
3010 CONDA ROAD SODA SPRINGS, ID 83276

AGRA Monenco
ENGINEERING GLOBAL SOLUTIONS

CPO EXPANSION PROJECT
UNCALCINED ORE OXIDATION
P&ID
SHEET 1 OF 3

DRAWING NO. 26-10-125 | REV. 2

EXHIBIT B

SUBJECT TO ALL APPLICABLE CONFIDENTIAL
BUSINESS INFORMATION PRIVILEGES

Phos
& PPA Elkn
P&ID's

AGR-CBI_003854
SUBJECT TO ALL APPLICABLE CONFIDENTIAL
BUSINESS INFORMATION PRIVILEGES

EXHIBIT B

Stream Number	222 19	260 01	260 03	261 01	261 02	261 03	261 04	261 05	261 06	261 07	261 08	261 09	261 10	261 11	261 13	261 14	261 15	261 17	261 18	261 20	261 21	261 22	261 23	261 24	262 05	264 06	291 01	291 02	291 03	291 17
DESCRIPTION	ROCK FROM WET ROCK GRINDING	SULFURIC ACID	RETURN ACID FROM 24C FILTER	RETURN ACID MIXING TEE	ROCK SLURRY TO REACTOR	REACTOR SLURRY TO 24C FILTER	REACTOR SLURRY TO BELT FILTERS	SLURRY TO FLASH COOLERS	SLURRY FROM FLASH COOLERS	SULFURIC ACID TO MIXING TEE	SULFURIC ACID TO REACTOR COMP 6	VAPOR FROM FLASH COOLERS	VAPOR FROM PRECOND	VAPOR TO FC VAC PUMPS	WATER FROM FC VAC PUMPS	SPILLS FROM PHOSACID SUMP	POND WATER RETURN	CAKE WASH TO 24C FILTER	WASH TO BELT FILTERS	REACTOR FUMES TO SCRUBBER	TOTAL REACTION FUMES TO SCRUBBER	PHOSACID SUMP FUMES TO SCRUBBER	POND WATER RETURN TO PRECOND TANK	POND WATER TO GYPSUM SYSTEM	RETURN ACID FROM BELT FILTERS	30% SLUDGE FROM CLAR	WATER TO FC VAC PUMPS	SEAL WATER TO FC PUMPS	POND WATER TO BAROMETRIC CONDENSERS	POND WATER TO PRECOND
Average Flow tP205/day	1,428		686	2,040	1,383	1,172	2,311																		1,353	118				
Average Flow t/day	6,686	3,624	2,297	9,798	6,457	6,439	12,696	492,511	491,317	3,262	99	1,194	774		481		19,554	2,707	4,350	608			0	4,583	6,501	553	481	48	19,554	6,136
Average Flow t/hr	278	151	137	408	269	268	529	20,521	20,472	136	4	50	32		20		815	92	181	25			0	191	271	23	20	2	815	256
Design Flow TOTAL t/hr											5																			
Design Flow EACH t/hr																														
Design Flow TOTAL lb/hr	632,000													4,540																
Design Flow EACH lb/hr	632,000													2,270																
Average Flow USGPM	606	332	445	1,326	587	694	1,371	54,584	53,042	299	5				80		3,259	368	725				0	763	880	62	80	6	3,259	1,024
Design Flow TOTAL USGPM	700	420	530	1,600	700	1,000	2,000	60,000	60,000	420	10				100	150	6,000	550	1,100				1,650	2,000	1,060	120	100	14	6,000	1,540
Design Flow EACH USGPM	700	420	530	800	700	1,000	1,000	30,000	30,000	210	10				50	150	3,000	550	550				1,650	3,000	530	120	50	7	3,000	770
Average Flow ACFM																					21,100	500								
Design Flow TOTAL ACFM												162,000	107,000	3,900						20,000	22,000	500								
Design Flow EACH ACFM												81,000	53,500	1,950						20,000	22,000	500								
Temperature °F	90	100	140	140	90	178	178	180	175.5	100	100	175.5	140	130	140	180	140	140	140	160	159	130	140	140	140		50	50	92	92
Pressure psig (psia)												(3.66)	(3.53)	(3.41)						-4in. H20	-4in. H20	-1in. H20								
Density lb/ft3	114.0	113.0	77.0	77.0	114.0	96.0	96.0	94.0	96.0	113.0	113.0	0.010	0.010	0.019	62.4	98.0	62.4	62.4	62.4	0.041	0.045	0.051	62.4	62.4	77.0	93.3	62.4	62.4	62.4	62.4
Specific Gravity	1.83	1.82	1.23	1.23	1.83	1.54	1.54	1.50	1.54	1.82	1.82				1.00	1.54	1.00	1.00	1.00				1.00	1.00	1.23	1.49	1.00	1.00	1.00	1.00
Viscosity cP	200	10	1.5	1.5	200	0	0	240	240	10	10				1	240	1	1	1				1	1	1.5		1	1	1	1
% P205 solids free (dry basis)	(31.5%)		20.8%	20.8%		26.0%	28.0%																		20.8%	28.4%				
% H2O	32.0%	5.5%			32.0%					5.5%	5.5%																			
% H2SO4		94.5%								94.5%	94.5%																			
% Solids by Weight	68.0%				0.7	35.0%	35.0%	35.0%	35.0%																	25.0%				
% Solids by Volume																														

NOTE: FLOWS ON THE PROCESS FLOW DIAGRAMS ARE FOR DESIGN PURPOSES ONLY - THEY ARE NOT MEANT TO BE A RIGOROUS PLANTWIDE COMPONENT BALANCE, AND MAY VARY FROM DRAWING TO DRAWING.

EQUIP. NO.	DESCRIPTION	STATUS
CP-0126001	REACTOR AGITATOR (COMP 1)	NEW
CP-0126003	REACTOR AGITATOR (COMP 2)	NEW
CP-0126003	REACTOR AGITATOR (COMP 3)	NEW
CP-0126004	REACTOR AGITATOR (COMP 4)	NEW
CP-0126005	REACTOR AGITATOR (COMP 5)	NEW
CP-0126006	REACTOR AGITATOR (COMP 6)	NEW
CP-0126007	REACTOR AGITATOR (COMP 7)	NEW
CP-0126009	PHOS ACID SUMP AGITATOR	NEW
CP-0126017	MIXING TEE (COMP 2)	NEW
CP-0126018	MIXING TEE (COMP 3)	NEW
CP-0126036	REACTOR ROCK SLURRY TANK AGITATOR	NEW
CP-1026001	FLASH COOLER VACUUM PUMP	NEW
CP-1026002	FLASH COOLER VACUUM PUMP	NEW
CP-1726005	PHOS ACID SUMP	NEW
CP-3326001	HOIST FOR FLASH COOLER PUMPS	NEW
CP-3326002	HOIST FOR AGITATORS	NEW
CP-3326003	HOIST FOR AGITATORS	NEW
CP-4126001	FLASH COOLER PUMP	NEW
CP-4126002	FLASH COOLER PUMP	NEW
CP-4126003	24C FILTER FEED PUMP	NEW
CP-4126004	BELT FILTER #1 FEED PUMP	NEW
CP-4126005	BELT FILTER #2 FEED PUMP	NEW
CP-4126006	BELT FILTER #1 CAKE WASH PUMP	NEW
CP-4126007	24C FILTER CAKE WASH PUMP	NEW
CP-4126009	PHOS ACID SUMP PUMP	NEW
CP-4126036	REACTOR ROCK SLURRY PUMP #1	NEW
CP-4126037	REACTOR ROCK SLURRY PUMP #2	NEW
CP-4126041	BELT FILTER #2 CAKE WASH PUMP	NEW
CP-4126046	FLASH COOLER SEAL TANK RETURN PUMP #1	NEW
CP-4126080	FLASH COOLER SEAL TANK RETURN PUMP #2	NEW
CP-5126001	FLASH COOLER CONDENSER SEAL TANK	NEW
CP-5126006	CAKE WASH TANK	NEW
CP-5126042	REACTOR ROCK SLURRY TANK	NEW
CP-5426001	RECYCLE HEADER	NEW
CP-5426002	REACTOR	NEW
CP-5426003	FLASH COOLER	NEW
CP-5426004	FLASH COOLER	NEW
CP-5426007	FLASH COOLER PRECONDENSER	NEW
CP-5426008	FLASH COOLER PRECONDENSER	NEW
CP-5426009	FLASH COOLER BAROMETRIC CONDENSER	NEW
CP-5426010	FLASH COOLER BAROMETRIC CONDENSER	NEW
CP-5826001	HYDRAULIC UNIT	NEW

RECEIVED
SEP 2 6 2000
SIMONS, CALGARY

LOG NUMBER
5805

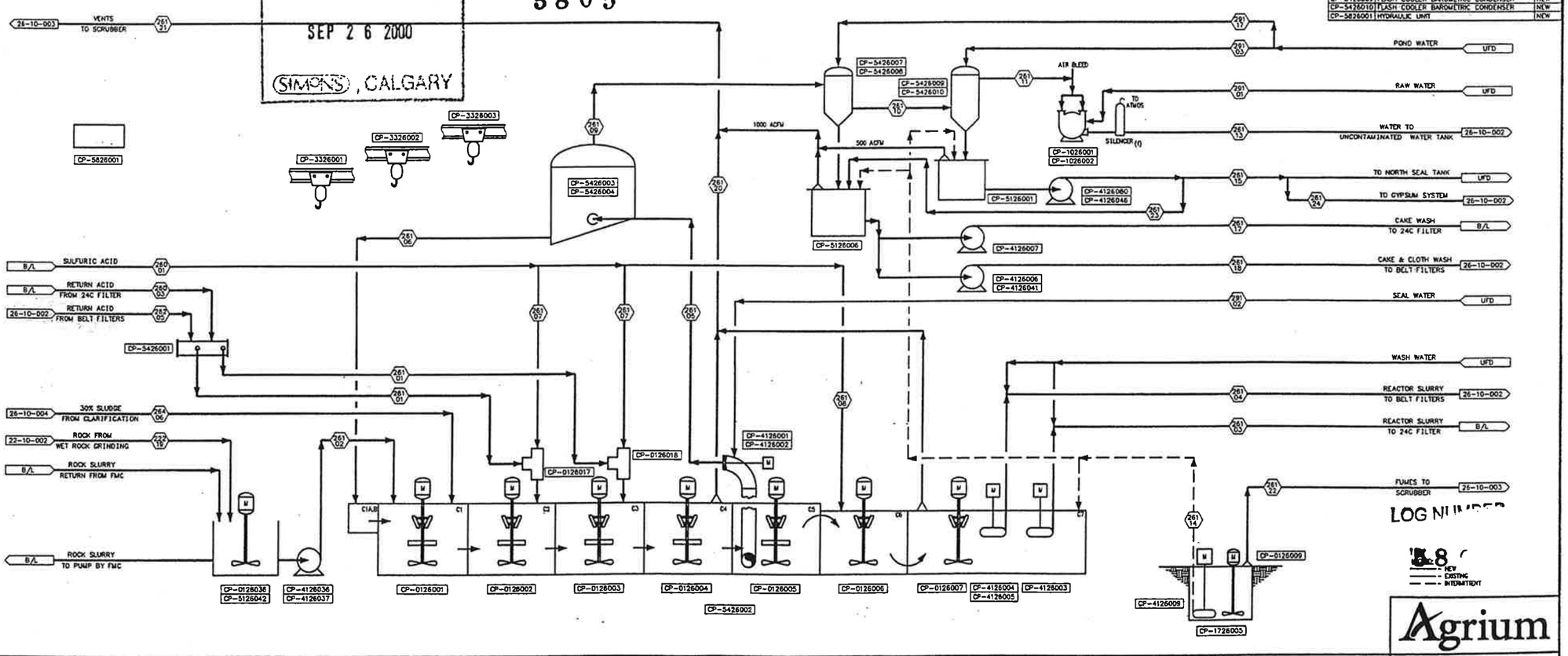

LOG NUMBER
5805

REFERENCE DRAWINGS	REV.	REVISION	DATE	BY
	G	REVISED LADDER	12 JUL 00	NRG

REV.	REVISION	DATE	BY	DRAWING HISTORY	DATE	REV.
B	REVISED PER CLIENT'S COMMENTS	06 DEC 99	NRG	FOR DETAIL ENGINEERING	17 DEC 99	C
C	REVISED MATERIAL BALANCE	17 DEC 99	NRG	FOR DETAIL ENGINEERING	11 FEB 00	D
D	ADDED 2ND PUMP	11 FEB 00	NRG	FOR DETAIL ENGINEERING	16 FEB 00	E
E	REVISED EQUIP NO	16 FEB 00	NRG	FOR DETAIL ENGINEERING	15 MAY 00	F
F	REVISED STREAMS, LINES & LADDER	11 MAY 00	SMN	FOR OPERATING MANUAL	12 JUL 00	G

THIS DRAWING, THE INFORMATION INCLUDED HEREIN ARE THE PROPERTY OF KEMWorks Technology, Inc. THIS DRAWING MAY NOT BE USED, COPIED OR DISCLOSED EXCEPT AS APPROVED BY KEMWorks Technology, Inc. UPON REQUEST, THIS DRAWING AND ALL COPIES HERE OF SHALL BE RETURNED IMMEDIATELY TO KEMWorks Technology, Inc.

SCALE	NONE	DATE
DESIGN BY	SMN	18 DEC 99
DRAWN BY	JKC	21 DEC 99
CHKD. BY	MDW	24 NOV 99
APPD. BY	NRG	24 NOV 99
CLIENT APPD.		

KEMWorks TECHNOLOGY, INC.
8925 IMPERIAL PARKWAY, SUITE 105
MULBERRY, FLORIDA USA
(863) 646-5369 FAX (863) 647-5219
www.kemworks.com

PROJ. MGR.	CLIENT	PROJ. NO.
NRG	AGRIUM	1334

Agrium

AGRIUM U.S., INC.
CPO EXPANSION
1325 TPD P205
REACTOR PFD

DWG NO. 26-10-001 REV. G

AGR-CBI_003855
SUBJECT TO ALL APPLICABLE CONFIDENTIAL BUSINESS INFORMATION PRIVILEGES

EXHIBIT B

Stream Number	260 05	260 06	261 04	261 13	261 18	261 24	262 01	262 02	262 03	262 05	262 06	262 07
DESCRIPTION	GYPSUM SLURRY FROM 24C FILTER	SLUDGE FROM PPA PRETREAT	REACTOR SLURRY TO BELT FILTERS	WATER FROM FC VAC PUMP	CAKE WASH FROM [illegible]	POND WATER TO GYPSUM SYSTEM	FILTER HOOD FUMES TO SCRUBBER	NO 1 FILTRATE	NO 2 FILTRATE	RETURN ACID TO REACTOR	FILTER ACID TO 30% CLARIFIER	NO 3 FILTRATE
Average Flow tP2O5/day	20		2,311							1,353	957	
Average Flow t/day	9,000	1,687	12,496	481	4,350	4,583		3,760	5,774	6,501	3,581	4,333
Average Flow t/hr	375	70	525	20	181	191		157	241	271	149	181
Design Flow TOTAL t/hr		80										
Design Flow EACH t/hr												
Design Flow TOTAL lb/hr												
Design Flow EACH lb/hr												
Average Flow USGPM	1,281	265	1,371	80	725	763		472	782	880	456	719
Design Flow TOTAL USGPM	1,540	300	2,000	100	1,100	3,000		570	940	1,060	550	950
Design Flow EACH USGPM	1,540	300	1,000	50	550	3,000		285	470	530	275	475
Average Flow ACFM							50,000					
Design Flow TOTAL ACFM							50,000					
Design Flow EACH ACFM							25,000					
Temperature °F	110		178	140	140	140	140	154	140	140	154	
Pressure psig (psia)							-1in H2O					
Density lb/ft3	73.0	66.1	96.0	62.4	62.4	62.4	0.046	82.0	76.5	77.0	81.6	62.8
Specific Gravity	1.17	1.06	1.54	1.00	1.00	1.00		1.31	1.23	1.23	1.31	1.01
Viscosity cP	100		0	1	1	1		1.4		1.5	1.4	1
% P2O5 (solids free)			28.0%					27.0%	18.4%	20.8%	27.0%	0.6%
% H2O												
% H2SO4												
% Solids by Weight	25.0%	10.0%	35.0%								1.0%	
% Solids by Volume												

Stream Number	262 08	262 09	262 10	262 11	262 12	262 13	262 14	262 15	262 16	262 17	262 19	262 20
DESCRIPTION	GYPSUM FROM BELT FILTER	VAPOR TO FILTER ACID TRAP	LIQUID FROM ACID TRAP	VAPOR TO FILTER SCRUBBER	[illegible] WATER TO BOOSTER PUMP	VAPOR TO FILTER VACUUM PUMP	WATER TO GYPSUM CHUTE	GYPSUM TO GYP SLURRY TANK	POND WATER TO FILTER SCRUBBER	POND WATER TO GYP SLURRY TANK	WATER FROM VAC PUMP TO UC TANK	NO 1 WASH
Average Flow tP2O5/day	38							38				
Average Flow t/day	5,910	583	395	182	913	118	2,667	8,577	180	1,916	925	4,333
Average Flow t/hr	246	24	16	8	15	5	111	355	8	80	39	181
Design Flow TOTAL t/hr	270											
Design Flow EACH t/hr	135											
Design Flow TOTAL lb/hr												
Design Flow EACH lb/hr												
Average Flow USGPM			50		152		444	690	30	316	154	719
Design Flow TOTAL USGPM			120		160		530	830	40	3,000	180	950
Design Flow EACH USGPM			60		80		265	415	20	3,000	90	475
Average Flow ACFM												
Design Flow TOTAL ACFM		43,100		14,100		7,800						
Design Flow EACH ACFM		21,550		7,050		3,900						
Temperature °F	140	140	140	140	140	120	140	160	92	92	150	
Pressure psig (psia)		(5.00)		(5.00)		(5.00)					(11.80)	
Density lb/ft3	108.6	0.019	82.0	0.019	62.4	0.021	62.4	88.6	62.4	62.4	62.4	62.8
Specific Gravity	1.74		1.31		1.00		1.00	1.42	1.00	1.00	1.00	1.01
Viscosity cP					1		1		1	1	1	1
% P2O5 (solids free)	0.9%											
% H2O												
% H2SO4												
% Solids by Weight	75.0%							52.0%				
% Solids by Volume												

Stream Number	262 21	262 22	262 23	262 24	262 25	262 27	262 28	262 29	291 04	291 07	291 08	291 10	291 16	291 16
DESCRIPTION	FILTRATE TANK FUMES TO SCRUBBER	GYP SLURRY TANK FUMES TO SCRUBBER	VAC SC SEAL TANK FUMES TO SCRUBBER	GYPSUM SLURRY TO STACK	NO 1 FILTRATE TO NO 2 FILTRATE	WATER TO NO 2 WASH BOXES	VAC PUMP WATER TO WASH SEAL TANK	SPILLS FROM FILTER SUMP	SEAL WATER TO FILTER	RAW WATER TO VACUUM PUMP	SEAL WATER TO GYP SLURRY PUMP	LP STEAM TO BELT FILTER	RAW WATER TO FLOC [illegible]	RAW WATER TO FLOC SKID
Average Flow tP2O5/day				58										
Average Flow t/day				22,272	175	3,437	1,406		180	841	18			
Average Flow t/hr				928	7	143	59		7.5	35	1			
Design Flow TOTAL t/hr														
Design Flow EACH t/hr														
Design Flow TOTAL lb/hr										85,091		110		
Design Flow EACH lb/hr												55		
Average Flow USGPM				3,066	23	572	234		30	140	3			
Design Flow TOTAL USGPM				3,800	183	690	280	150	40	170	4		50	50
Design Flow EACH USGPM				3,800	92	345	280	150	20	85	4		50	50
Average Flow ACFM	2,500	2,500	1,000											
Design Flow TOTAL ACFM	2,500	2,500	1,000											
Design Flow EACH ACFM	1,250	2,500	500											
Temperature °F	140	140	130	110	154		144	110	180	50	160	SAT'D	50	50
Pressure psig (psia)	-1in H2O	-1in H2O	-1in H2O									15		
Density lb/ft3	0.049	0.048	0.051	75.5	81.6	62.4	62.4	75.5	62.4	62.4	62.4		62.4	62.4
Specific Gravity				1.21	1.31	1.00	1.00	1.21	1.00	1.00	1.00		1.00	1.00
Viscosity cP				100	1	1	1	100	1	1	1		1	1
% P2O5 (solids free)					27.0%									
% H2O														
% H2SO4														
% Solids by Weight				30.0%				30.0%						
% Solids by Volume														

NOTE: FLOWS ON THE PROCESS FLOW DIAGRAMS ARE FOR DESIGN PURPOSES ONLY – THEY ARE NOT MEANT TO BE A RIGOROUS PLANTWIDE COMPONENT BALANCE, AND MAY VARY FROM DRAWING TO DRAWING.

EQUIP. NO.	DESCRIPTION	STATUS
CP-0126010	FILTER #1 NO. 1 AGITATOR	NEW
CP-0126011	FILTER #1 NO. 2 AGITATOR	NEW
CP-0126012	FILTER #1 NO. 3 AGITATOR	NEW
CP-0126014	FILTER #2 NO. 1 AGITATOR	NEW
CP-0126015	FILTER #2 NO. 2 AGITATOR	NEW
CP-0126016	FILTER #2 NO. 3 AGITATOR	NEW
CP-0126024	FILTER SUMP AGITATOR	NEW
CP-0126031	FILTER FLOCCULANT ADDITIVE SYSTEM	NEW
CP-1026003	FILTER #1 VACUUM PUMP	NEW
CP-1026004	FILTER #2 VACUUM PUMP	NEW
CP-1726006	FILTER SUMP	NEW
CP-2126002	#1 FILTER BELT SUPPORT FAN	NEW
CP-2126003	#2 FILTER BELT SUPPORT FAN	NEW
CP-2426001	BELT FILTER #1	NEW
CP-2426002	BELT FILTER #2	NEW
CP-3226001	FILTER #1 HOOD	NEW
CP-3226002	FILTER #2 HOOD	NEW
CP-3326004	FILTER #1 BRIDGE CRANE	NEW
CP-3826001	FILTER #1 GYPSUM CHUTE	NEW
CP-3826002	FILTER #2 GYPSUM CHUTE	NEW
CP-4126010	FILTER #1 NO. 1 FILTRATE PUMP	NEW
CP-4126011	FILTER #1 NO. 2 FILTRATE PUMP	NEW
CP-4126012	FILTER #1 NO. 3 FILTRATE PUMP	NEW
CP-4126014	FILTER #1 FILTRATE TRANSFER PUMP	NEW
CP-4126015	FILTER #2 FILTRATE TRANSFER PUMP	NEW
CP-4126016	FILTER #2 NO. 1 FILTRATE PUMP	NEW
CP-4126017	FILTER #2 NO. 2 FILTRATE PUMP	NEW
CP-4126018	FILTER #2 NO. 3 FILTRATE PUMP	NEW
CP-4126019	FILTER #2 CLOTH WASH PUMP	NEW
CP-4126029	FILTER #1 CLOTH WASH PUMP	NEW
CP-4126043	GYPSUM DISPOSAL PUMP	NEW
CP-4126045	GYPSUM DISPOSAL PUMP	NEW
CP-4126068	UNCONTAMINATED WATER PUMP	NEW
CP-4126079	FILTER SUMP PUMP	NEW
CP-5126004	GYPSUM SLURRY TANK	NEW
CP-5126005	FILTER #1 VACUUM SCRUBBER SEAL TANK	NEW
CP-5126016	FILTER #2 VACUUM SCRUBBER SEAL TANK	NEW
CP-5126065	FILTER FLOCCULANT TANK	NEW
CP-5126071	UNCONTAMINATED WATER TANK	NEW
CP-5426012	FILTER #1 ACID TRAP	NEW
CP-5426014	FILTER #1 CLOUDY FILTRATE RECEIVER	NEW
CP-5426015	FILTER #1 NO. 1 FILTRATE RECEIVER	NEW
CP-5426016	FILTER #1 NO. 2 FILTRATE RECEIVER	NEW
CP-5426017	FILTER #1 NO. 3 FILTRATE RECEIVER	NEW
CP-5426018	FILTER #1 SCRUBBER	NEW
CP-5426020	FILTER #2 CLOUDY FILTRATE RECEIVER	NEW
CP-5426021	FILTER #2 NO. 1 FILTRATE RECEIVER	NEW
CP-5426022	FILTER #2 NO. 2 FILTRATE RECEIVER	NEW
CP-5426023	FILTER #2 NO. 3 FILTRATE RECEIVER	NEW
CP-5426024	FILTER #2 ACID TRAP	NEW
CP-5426025	FILTER #2 SCRUBBER	NEW
CP-5426026	FILTER #1 CAKE DRY RECEIVER	NEW
CP-5426027	FILTER #2 CAKE DRY RECEIVER	NEW
CP-5426030	FILTER #1 FILTRATE NO. 1 SEAL TANK	NEW
CP-5426031	FILTER #2 FILTRATE NO. 1 SEAL TANK	NEW
CP-5426032	FILTER #1 FILTRATE NO. 2 SEAL TANK	NEW
CP-5426033	FILTER #2 FILTRATE NO. 2 SEAL TANK	NEW
CP-5426034	FILTER #1 FILTRATE NO. 3 SEAL TANK	NEW
CP-5426035	FILTER #2 FILTRATE NO. 3 SEAL TANK	NEW

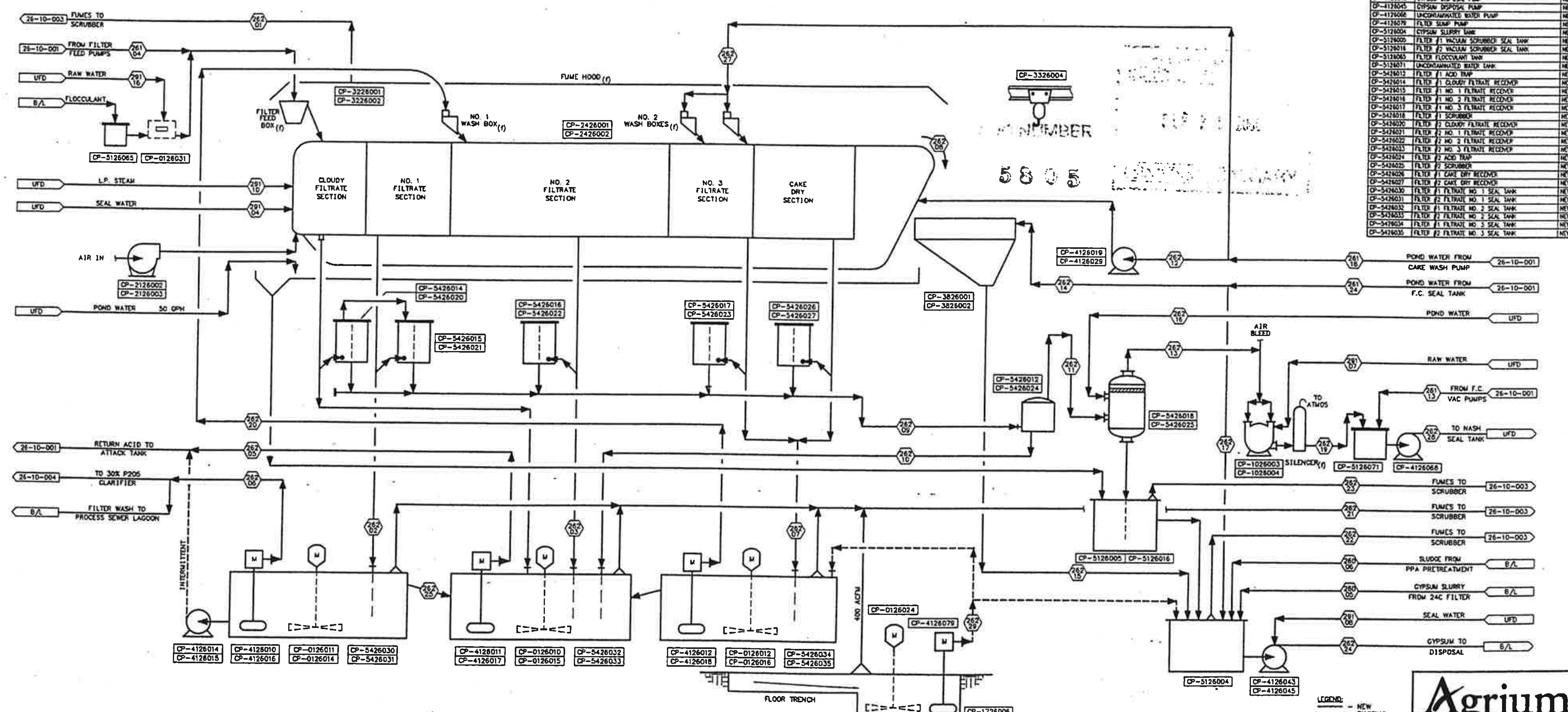

REFERENCE DRAWINGS	REFERENCE DRAWINGS	REV.	REVISION	DATE	BY	DRAWING HISTORY	DATE	REV.
		B	REVISED MATERIAL BALANCE	17 DEC 99	NRG	FOR APPROVAL	24 NOV 99	A
		C	REVISED LADDER, ADDED LINE, WASH BOX & EQUIP. NUMBER	11 FEB 00	NRG	FOR DETAIL ENGINEERING	17 DEC 99	B
						FOR DETAIL ENGINEERING	11 FEB 00	C
		D	REVISED STREAM, LINES & LADDER	11 MAY 00	SMN	FOR DETAIL ENGINEERING	15 MAY 00	D
		E	REVISED LADDER	12 JUL 00	NRG	FOR OPERATING MANUAL	12 JUL 00	E

SCALE	NONE	DATE
DESIGN BY	SMN	22 DEC 99
DRAWN BY	JKC	28 DEC 99
CHKD. BY	MDW	24 NOV 99
APPD. BY	NRG	24 NOV 99
CLIENT APPD.		

KEMWORKS TECHNOLOGY, INC.
5925 IMPERIAL PARKWAY, SUITE 105 MULBERRY, FLORIDA USA
(863) 648-5369 FAX (863) 647-5219
www.kemworks.com

Agrium

AGRIUM U.S., INC.
CPO EXPANSION
1325 TPD P2O5
BELT FILTER PFD

PROJ. MGR.	CLIENT	PROJ. NO.	DWG. NO.	REV.
NRG	AGRIUM	1334	26-10-002	E

EXHIBIT B

AGR-CBI_003856
SUBJECT TO ALL APPLICABLE CONFIDENTIAL
BUSINESS INFORMATION PRIVILEGES

Stream Number	260 06	260 07	260 08	260 09	260 10	260 11	260 12	260 13	260 14	260 15	261 21	261 22	262 01	262 21	262 22	262 23	263 01	263 02	263 03	263 04	263 05	263 07	263 08	263 09	263 10	263 11	263 12	263 13	263 14	263 15	26A 14	291 09	291 11
DESCRIPTION	FUMES FROM EXTG DGTRS & No 1 VAC CLR SEAL TK	FUMES FROM 24C FILTRATE TANKS	FUMES FROM 24C VAC PUMP SEAL TANKS	FUMES FROM GYP SLURRY SUMP	FUMES FROM N SEAL TANK	FUMES FROM 18B FILTRATE TANKS	FUMES FROM 18B VAC PUMP SEAL TANKS	FUMES FROM 24C FILTER HOOD	FUMES FROM 18B FILTER HOOD	FUMES FROM FLOOR SUMP	TOTAL FUMES FROM REACTION	FUMES FROM PHOSACID SUMP	FUMES FROM BELT FILTER HOODS	FUMES FROM BELT FILTER FILT TKS	FUMES FROM GYP SLURRY TANK	FUMES FROM BELT FILTER VAC SC TK	FUMES FROM BELT HOOD & FILT TK	FUMES FROM BELT FILTER BLDG	FUMES FROM #1 LAMELLA	FUMES FROM EXIST BLDG	TOTAL FUMES TO SCRUBBER	RECIRC RAW WATER TO SCRUBBER	RAW WATER TO SCRUBBER	SCRUBBER OUTLET TO FAN	SCRUBBER FAN OUTLET TO STACK	SCRUBBER BLOWDOWN	WATER TO SCRUBBER 1ST STAGE	WATER TO SCRUBBER 2ND STAGE	WATER TO VOID SECTION & DUCTS	FUMES FROM D B BOX	FUMES FROM GC & CLARIFIER AREA	TOTAL RAW WATER TO SCRUBBER	POND WATER TO SCRUBBER
Average Flow lb205/day																																	
Average Flow t/day																																	
Average Flow t/hr																																	
Design Flow t/hr																																	
Design Flow lb/hr	56,279	8,833	2,934	5,867	6,067	5,868	1,521	73,342	14,688	4,550	56,553	1,517	146,685	7,334	7,334	3,034	154,019	165,904	6,026	125,862	348,319			316,414	316,414					8,833	24,268		
Average Flow USGPM																						1,700	50			1,863	1,700	1,700	1,900			50	1,700
Design Flow USGPM																						2,000	100			2,100	2,000	2,000	2,000			550	2,000
Average Flow ACFM	21,000	3,000	1,000	2,000	2,000	2,000	500	25,000	5,000	1,500	21,100	500	50,000	2,500	2,500	1,000	53,000	57,500	2,000	43,500	125,000			109,275	101,183					3,000	8,000		
Design Flow ACFM	21,000	3,000	1,000	2,000	2,000	2,000	500	25,000	5,000	1,500	22,000	500	50,000	2,500	2,500	1,000	53,000	58,000	2,000	44,000	135,000			120,000	120,000					3,000	8,000		
Temperature °F	150	140	140	140	130	140	130	140	140	130	159	130	140	140	140	130	140	140	130	137	142	118	50	120	122	125	125	125	125	140	130		92
Pressure psig (psig)	-4in H20	-1in H20	-1in H20	-1in H20	-1in H20	-1in H20	-1in H20	-1in H20	-1in H20	-1in H20	-4in H20	-1in H20	-1in H20	-1in H20	-1in H20	-1in H20	-4in H20	-6in H20	-4in H20	-8in H20	-14in H20			-24in H20	1in H20					-1in H20	-1in H20		
Density lb/ft3	0.045	0.049	0.049	0.049	0.051	0.049	0.051	0.049	0.049	0.051	0.045	0.051	0.049	0.049	0.049	0.051	0.048	0.048	0.050	0.048	0.046	62.4	62.4	0.048	0.052	62.4	62.4	62.4	62.4	0.049	0.051	62.4	62.4
Specific Gravity																						1.00	1.00			1.00	1.00	1.00	1.00			1.00	1.00
Viscosity cP																						1	1			1	1	1	1			1	1
Fluorine lb/h											892						161	171		117	1180			< 0.78	< 0.78	1179							
Fluorine % (ppm*)																																	
* ppm in dry air																																	

NOTE: FLOWS ON THE PROCESS FLOW DIAGRAMS ARE FOR DESIGN PURPOSES ONLY – THEY ARE NOT MEANT TO BE A RIGOROUS PLANTWIDE COMPONENT BALANCE, AND MAY VARY FROM DRAWING TO DRAWING.

GROUP NO.	DESCRIPTION	STATUS
CP-1626001	SCRUBBER STACK	NEW
CP-2126001	SCRUBBER FAN	NEW
CP-4126020	1ST STAGE RECIRCULATION PUMP	NEW
CP-4126021	2ND STAGE RECIRCULATION PUMP	NEW
CP-4126023	3RD STAGE RECIRCULATION PUMP	NEW
CP-4126077	SCRUBBER BLOWDOWN PUMP	NEW
CP-4126078	SCRUBBER VOID SECTION PUMP	NEW
CP-4526001	PHOSPHORIC ACID SCRUBBER	NEW
CP-5126003	SCRUBBER HEAD TANK	NEW
CP-5126075	SCRUBBER SEAL POT	NEW
CP-5126076	SCRUBBER FAN & STACK DRAIN SEAL POT	NEW

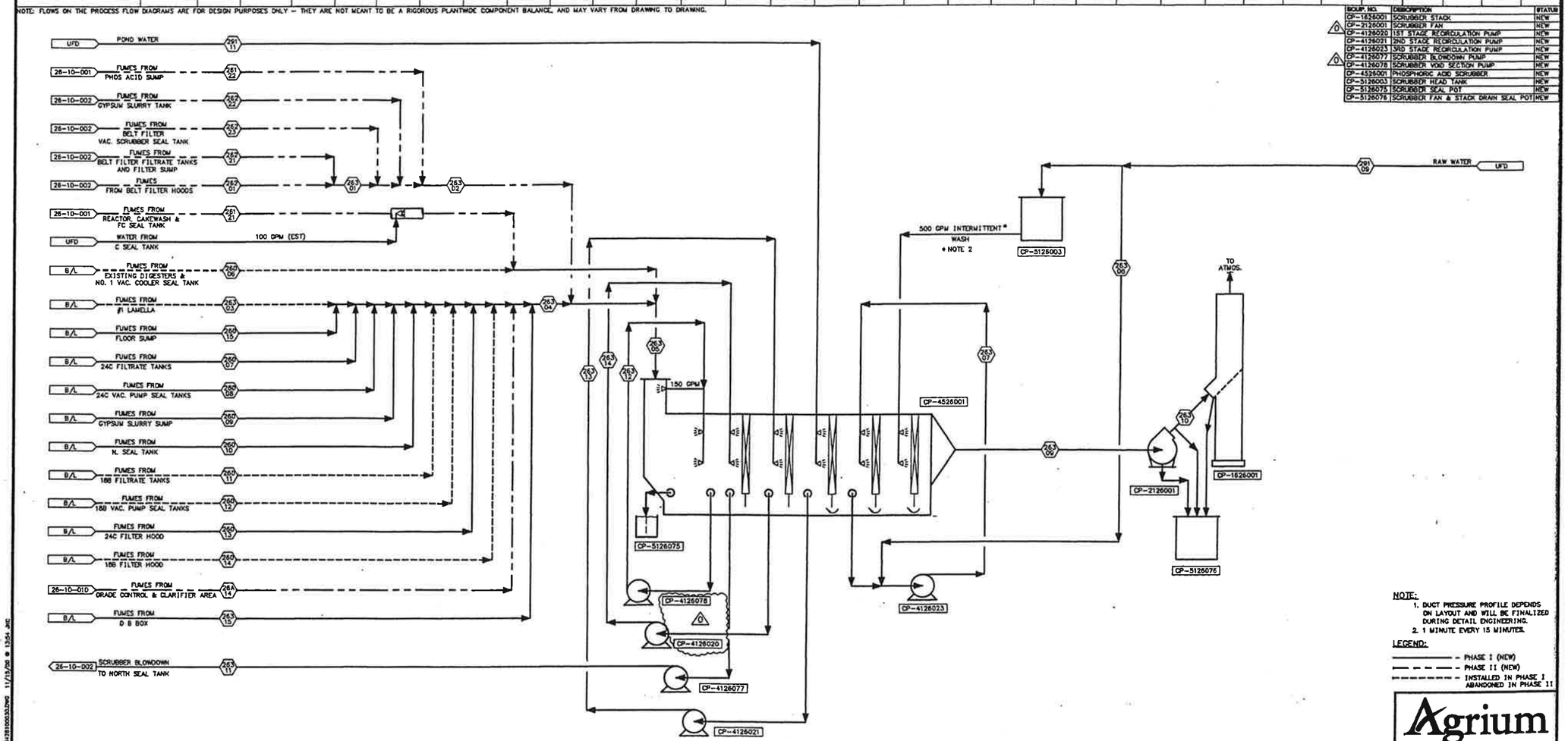

NOTE:
1. DUCT PRESSURE PROFILE DEPENDS ON LAYOUT AND WILL BE FINALIZED DURING DETAIL ENGINEERING.
2. 1 MINUTE EVERY 15 MINUTES.

LEGEND:
- PHASE I (NEW)
- PHASE II (NEW)
- INSTALLED IN PHASE I ABANDONED IN PHASE II

Agrium

REFERENCE DRAWINGS	REFERENCE DRAWINGS	REV.	REVISION	DATE	BY	DRAWING HISTORY	DATE	REV.
		0	REVISED EQUIP. NAMES	15 NOV 00	NRG	FOR START-UP	15 NOV 00	0

THIS DRAWING, THE DATA THEREON AND THE INFORMATION INCLUDED THEREIN ARE THE PROPERTY OF KEMWorks Technology, Inc. THIS DRAWING MAY NOT BE USED, COPIED OR DISCLOSED EXCEPT AS AUTHORIZED BY KEMWorks Technology, Inc. UPON REQUEST. THIS DRAWING AND ALL COPIES MUST BE RETURNED IMMEDIATELY TO KEMWorks Technology, Inc.

SCALE: NONE		DATE
DESIGN BY	SMN	22 DEC 99
DRAWN BY	JKC	22 DEC 99
CHKD. BY	MDW	24 NOV 00
APPD. BY	NRG	24 NOV 00
CLIENT APPD.		

KEMWorks TECHNOLOGY, INC.
8325 IMPERIAL PARKWAY, SUITE 165
MULBERRY, FLORIDA USA
(863) 648-5360 FAX (863) 647-5210
www.kemworks.com

PROJ. MGR.	CLIENT	PROJ. NO.
NRG	AGRIUM	1334

AGRIUM U.S., INC.
CPO EXPANSION
PHOS ACID
SCRUBBER PFD

DWG. NO. 26-10-003 REV. 0

EXHIBIT B

AGR-CBI_003857
SUBJECT TO ALL APPLICABLE CONFIDENTIAL BUSINESS INFORMATION PRIVILEGES

Stream Number	260 18	262 06	264 04	264 05	264 06	264 07	264 08	264 09	264 10	264 14	264 15	264 16	264 17	265 04	26A 09
DESCRIPTION	30% P205 FROM 24C FILTER	30% P205 FROM BELT FILTER	30% P205 TO SPA 6C CLAR	30% P205 TO FMC	30% P205 SLUDGE TO REACTOR	42% P205 TO 4,5,7 EVAPS	30% P205 TO 1,2,3,6,8 EVAPS	TOTAL FEED TO 30% CLARIFIER	O/F FROM 30% CLAR	42% P205 CLARIFIER U/F	30% P205 TO DB BOX	30% P205 TO DB BOX	FUMES FROM 42% CLAR	42% P205 FROM EVAPS	42% P205 GRADE CONT CLARIFIER U/F
Average Flow lb P205/day	486	957	111	407	118	664	964	1,599	1,482	113	964	964		777	43
Average Flow t/day	1,753	3,581	385	1,423	553	1,560	3,440	5,801	5,248	351	3,440	3,440		1,910	116
Average Flow t/hr	73	149	16	59	23	65	143	242	219	15	143	143		80	5
Design Flow TOTAL t/hr														102	
Design Flow EACH t/hr															
Design Flow TOTAL lb/hr															
Design Flow EACH lb/hr															
Average Flow USGPM	221	456	48	178	62	166	430	718	656	34	430	430		201	12
Design Flow TOTAL USGPM	270	550	60	210	120	200	520	794	790	40	520	520		258	15
Design Flow EACH USGPM	270	275	60	210	120	200	520	794	790	40	520	520		258	15
Average Flow ACFM													2,000		
Design Flow TOTAL ACFM													2,000		
Design Flow EACH ACFM													2,000		
Temperature °F		154	130					170					130	160	
Pressure psig (psia)													~1in H20		
Density lb/ft3	82.4	81.6	83.0	83.0	93.3	97.6	83.2	84.1	83.2	106.6	83.2	83.2	0.051	99.1	98.0
Specific Gravity	1.32	1.31	1.33	1.33	1.49	1.56	1.33	1.32	1.33	1.71	1.33	1.33		1.59	1.57
Viscosity cP	2	1.4													
% P205 (solids free)	28.0%	27.0%	26.7%	26.7%	26.4%	42.6%	26.4%	28.4%	28.4%	42.8%	26.4%	26.4%		42.8%	40.0%
% H2O															
% H2SO4															
% Solids by Weight	1.0%	1.0%	0.50%	0.50%	25.00%	0.50%	0.50%	2.83%	0.50%	25.00%	0.50%	0.50%		5.00%	20.00%
% Solids by Volume	0.57%	0.57%	0.28%	0.28%	15.70%	0.33%	0.28%	1.60%	0.28%	17.93%	0.28%	0.28%		3.33%	12.13%

NOTE: FLOWS ON THE PROCESS FLOW DIAGRAMS ARE FOR DESIGN PURPOSES ONLY - THEY ARE NOT MEANT TO BE A RIGOROUS PLANTWIDE COMPONENT BALANCE, AND MAY VARY FROM DRAWING TO DRAWING.

EQUIP NO.	DESCRIPTION	STATUS
CP-0106014	TK. #12 AGITATOR	EXIST
CP-0106015	TK. #18 AGITATOR	EXIST
CP-0106032	TK. #23 AGITATOR	EXIST
CP-0126023	42% P205 O/F TANK AGITATOR	NEW
CP-2406002	TK. #20 30% P205 CLARIFIER RAKE	EXIST
CP-2406003	TK. #24 30% P205 CLARIFIER RAKE	EXIST
CP-2426022	42% P205 CLARIFIER RAKE	NEW
CP-4106031	#4 EVAPORATOR FEED PUMP	EXIST
CP-4106032	#5 EVAPORATOR FEED PUMP	EXIST
CP-4106050	#1 EVAPORATOR FEED PUMP	EXIST
CP-4106053	#2 EVAPORATOR FEED PUMP	EXIST
CP-4106054	#3 EVAPORATOR FEED PUMP	EXIST
CP-4106055	TK. #23 FEED PUMP (NORTH)	EXIST
CP-4106056	TK. #23 FEED PUMP (SOUTH)	EXIST
CP-4106057	30% STORAGE TK. #18 PUMP (NORTH)	EXIST
CP-4106058	TK. #18 PUMP (WEST)	EXIST
CP-4106067	30% P205 CLARIFIER U/F PUMP	EXIST
CP-4106071	30% STORAGE TK. #18 PUMP (SOUTH)	EXIST
CP-4106096	#6 EVAPORATOR FEED PUMP	EXIST
CP-4106106	30% STORAGE TK. #12 PUMP (NORTH)	EXIST
CP-4106107	30% STORAGE TK. #12 PUMP (SOUTH)	EXIST
CP-4106108	30% P205 CLARIFIER U/F PUMP	EXIST
CP-4106122	#7 EVAPORATOR FEED PUMP	EXIST
CP-4106138	#6 EVAPORATOR FEED PUMP	EXIST
CP-4126033	42% P205 CLARIFIER U/F PUMP	NEW
CP-4126070	42% P205 PUMP	NEW
CP-4126071	42% P205 PUMP	NEW
CP-5106012	TK. #12 30% P205 STORAGE	EXIST
CP-5106018	TK. #18 30% P205 STORAGE	EXIST
CP-5106020	TK. #20 30% P205 CLARIFIER	EXIST
CP-5106023	TK. #23 42% P205 STORAGE	EXIST
CP-5106024	TK. #24 30% P205 CLARIFIER	EXIST
CP-5126024	42% P205 O/F TANK	NEW
CP-5126025	42% P205 CLARIFIER	NEW
CP-5126069	42% CLARIFIER FLOCCULANT STORAGE TANK	NEW

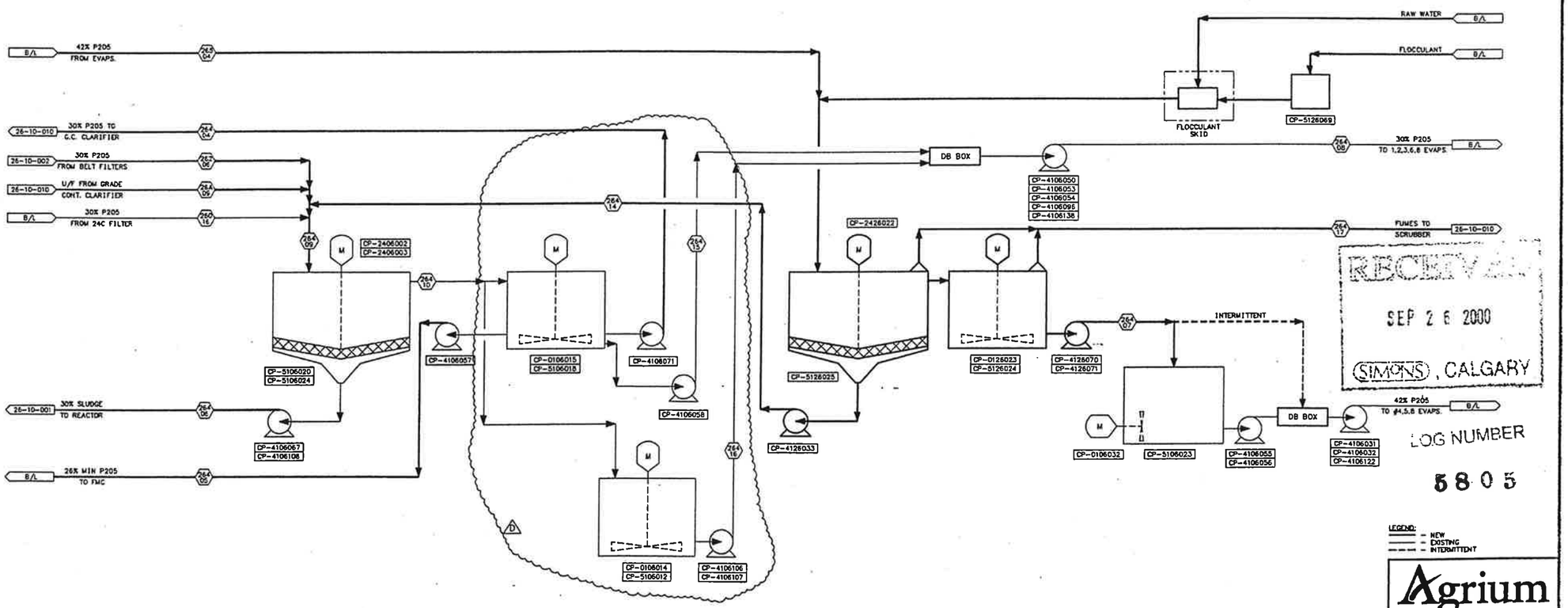

RECEIVED
SEP 26 2000
SIMONS, CALGARY

LOG NUMBER
5805

Agrium

REFERENCE DRAWINGS	REFERENCE DRAWINGS

REV.	REVISION	DATE	BY
B	REVISED MATERIAL BALANCE	17 DEC 99	NRG
C	REPLACED PIPE HEADER	11 MAY 00	NRG
D	ASSIGNED 30% ACID PUMPS TO TANKS	26 SEP 00	NRG

DRAWING HISTORY	DATE	REV.
FOR APPROVAL	24 NOV 99	A
FOR DETAIL ENGINEERING	17 DEC 99	B
FOR DETAIL ENGINEERING	15 MAY 00	C
FOR DETAIL ENGINEERING	26 SEP 00	D

THIS DRAWING, THE IDEAS AND INFORMATION INCLUDED HEREIN ARE THE PROPERTY OF KEMWorks Technology, Inc. THIS DRAWING MAY NOT BE USED, COPIED OR DISCLOSED EXCEPT AS APPROVED BY KEMWorks Technology, Inc. UPON REQUEST, THIS DRAWING AND ALL COPIES MADE OF SAME SHALL BE RETURNED IMMEDIATELY TO KEMWorks Technology, Inc.

		DATE
SCALE	NONE	
DESIGN BY	RTS	28 DEC 99
DRAWN BY	JKC	29 DEC 99
CHKD. BY	MDW	24 NOV 99
APPD. BY	NRG	24 NOV 99
CLIENT APPD.		

KEMWorks TECHNOLOGY, INC.
8925 IMPERIAL PARKWAY, SUITE 105
MULBERRY, FLORIDA USA
(863) 648-5369 FAX (863) 647-5219
www.kemworks.com

PROJ. MGR.	CLIENT	PROJ. NO.
NRG	AGRIUM	1334

AGRIUM U.S., INC.
CPO EXPANSION
PHOS ACID
CLARIFICATION PFD

DWG. NO. 26-10-004 REV. D

AGR-CBI_003858
SUBJECT TO ALL APPLICABLE CONFIDENTIAL BUSINESS INFORMATION PRIVILEGES

EXHIBIT B

Stream Number	241 06	241 08	260 16	264 04	264 17	268 12	268 13	268 14	268 15	268 16	268 17	268 18	268 19	268 20	268 21	268 22	268 23	268 24	268 25	268 26	268 27	268 28	268 29	268 30	268 31	268 32	291 31	291 32	291 33
DESCRIPTION	RAFFINATE FROM DAY TANK	RAFFINATE TO 60% DC STORAGE	FLOCCULANT TO TANK	CLARIFIED FLUID FROM 40% CLAR	FROM 40% CLAR	SPA FIL. 3 FLUID TO SURGE	SPA FIL. 3 FLUID TO SURGE	SPA FIL. 1 FLUID TO SURGE	RECONDITIONED SPA FIL. 3 FLUID TO SURGE	RECONDITIONED SPA FIL. 3 FLUID TO SURGE	RECONDITIONED SPA FIL. 1 FLUID TO SURGE	RECONDITIONED SPA FLUID TO SURGE	SURPLUS SPA FLUID TO STORAGE	SURPLUS SPA FLUID TO CLARIFIER	FLOCCULANT TO STORAGE CONTROL CLARIFIER	POND WATER TO RETURN LINE	UNDERFLOW FROM STORAGE CONTROL CLARIFIER	STORAGE CONTROL CLARIFIER U/F	FLUID ONE TO STORAGE	RAFFINATE TO 60% DC DAY	FLUID TO 60% DC FEED TANK	FLUID TO SCRUBBER	50% P205 TO 60% DC STORAGE	50% P205 TO 60% DC TANK 21	FLUID FROM SPA SUMP	50% P205 TO STORAGE	50% P205 TO 60% DC	POND WATER TO RETURN LINE
Average Flow M P2O5/day	38	28		111		37	37	37	37	37	37	37	40	40	1	120	12	74	11	0	88		63	63		10	1	120
Average Flow L/day	151	114		385		87	87	87	81	81	81	81	40	50	5	144	15	90	13	25	105		80	170		10	3	144
Average Flow L/hr	6	5		16		4	4	4	3	3	3	3	40	50			15	90	12	20	100		80	170		10		
Design Flow TOTAL L/hr																						8,000			4,000				
Design Flow EACH L/hr																						8,000			4,000				
Design Flow TOTAL lb/hr																						8,000			4,000				
Design Flow EACH lb/hr																						130			130	60	50	95	
Average Flow USGPM	19	14	SEE NOTE	48																		-1in H20			-1in H20				
Design Flow TOTAL USGPM	65	25	NOTE	80																		0.051	100.8	100.8	0.051	62.4	62.4	62.4	
Design Flow EACH USGPM	65	25	80.0W	80																			1.82	1.82		1.00	1.00	1.00	
Average Flow ACFM					2,000																					1	1	1	
Design Flow TOTAL ACFM					2,000																								
Design Flow EACH ACFM					2,000																								
Temperature °F	95	95		130	130	200	200	200	200	200	200	200	180	180		95			80	95						60	50	95	
Pressure psig (psia)					-1in H20																								
Density lb/ft3	63.8	63.8		63.0	0.051								102.4	102.4		62.4	88.0	63.6	72.7	63.6	92.0	0.051	100.8	100.8	0.051	62.4	62.4	62.4	
Specific Gravity	1.34	1.34		1.33									1.64	1.64		1.00	1.57	1.50	1.17	1.34	1.47		1.62	1.62		1.00	1.00	1.00	
Viscosity cP	15	15														1				15						1	1	1	
% P205 (solids free)	25	25		26.7		65	65	65	65	65	65	65	50	50			40	40	15	25	34		47	47					
% H2O																										100			
% H2SO4																													
% Solids by Weight				0.5		40	40	40	40	40	40	40	4.5	4.5			20.0	0.5	9.3		0.5		1.0	1.0					
% Solids by Volume																													

NOTE: FLOWS ON THE PROCESS FLOW DIAGRAMS ARE FOR DESIGN PURPOSES ONLY - THEY ARE NOT MEANT TO BE A RIGOROUS PLANTWIDE COMPONENT BALANCE, AND MAY VARY FROM DRAWING TO DRAWING.
SEE DWG 26B-10 B ON HOLD POINING DERIL DESIGN AND SPECIFICATION OF FLOCCULANT.

BOLIP NO.	DESCRIPTION	STATUS
CP-0106018	SPA FILTER SUMP AGITATOR	EXIST
CP-0126019	42% P205 GRADE CONT. STORAGE TK. AGITATOR	NEW
CP-0130003	42% P205 GRADE CONT. CLAR. O/F TK. AGITATOR	NEW
CP-0130003	52% P205 GRADE CONT. STORAGE TK. AGITATOR	NEW
CP-1706005	SPA SUMP	EXIST
CP-1706014	SPA CONTAMINENT SUMP	EXIST
CP-2428021	42% P205 GRADE CONT. CLARIFIER RAKE	NEW
CP-4106021	#1 EVAPORATOR PRODUCT PUMP	EXIST
CP-4106042	SPA CONTAMINENT SUMP PUMP	EXIST
CP-4106066	SPA FILTER SUMP PUMP	EXIST
CP-4126032	42% P205 GRADE CONT. SLUDGE PUMP	NEW
CP-4126034	42% P205 GRADE CONT. O/F TANK PUMP	NEW
CP-4126053	42% P205 GRADE CONT. STORAGE PUMP	NEW
CP-4126100	SPA SLUDGE PUMP	EXIST
CP-4130022	52% P205 GRADE CONT. STORAGE TK. PUMP	NEW
CP-5106026	SPA SLUDGE TANK	EXIST
CP-5126011	42% P205 GRADE CONT. CLARIFIER	NEW
CP-5126023	42% P205 GRADE CONT. CLAR. O/F TANK	NEW
CP-5126041	42% P205 GRADE CONT. STORAGE TANK	NEW
CP-5126067	G.C. FLOCCULANT STORAGE TANK	NEW
CP-5130007	52% P205 GRADE CONT. STORAGE TANK	NEW
CP-5406068	#7 EVAPORATOR	EXIST

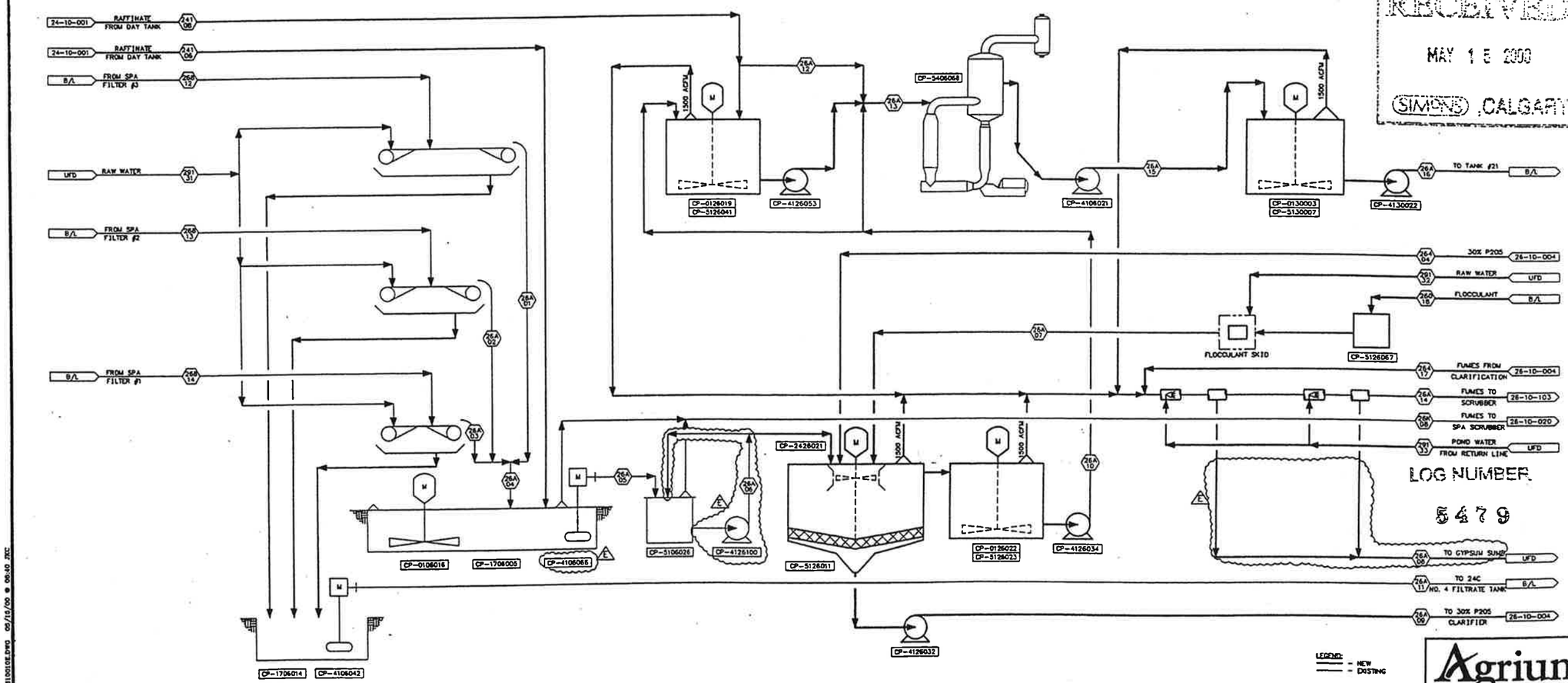

RECEIVED
MAY 15 2000
SIMONS CALGARY

LOG NUMBER
5479

REFERENCE DRAWINGS	REFERENCE DRAWINGS

REV.	REVISION	DATE	BY
B	REVISED MATERIAL BALANCE	17 DEC 99	NRG
C	REVISED LADDER, ADDED LINE	11 FEB 00	NRG
D	REVISED MATERIAL BALANCE	24 FEB 00	NRG
E	REVISED EQUIP. & LINES	11 MAY 00	SMN

DRAWING HISTORY	DATE	REV.
FOR APPROVAL	24 NOV 99	A
FOR DETAIL ENGINEERING	17 DEC 99	B
FOR DETAIL ENGINEERING	11 FEB 00	C
FOR DETAIL ENGINEERING	24 FEB 00	D
FOR DETAIL ENGINEERING	15 MAY 00	E

THIS DRAWING, THE INFORMATION AND INFORMATION DISCLOSED THEREIN ARE THE PROPERTY OF KEMWorks Technology, Inc. THIS DRAWING MAY NOT BE COPIED OR DISCLOSED EXCEPT AS APPROVED BY KEMWorks Technology, Inc. UPON REQUEST, THIS DRAWING AND ALL COPIES THEREOF SHALL BE RETURNED IMMEDIATELY TO KEMWorks Technology, Inc.

SCALE: NONE	DATE
DESIGN BY: RLD	13 JAN 99
DRAWN BY: JKC	14 JAN 99
CHKD. BY: MDW	24 NOV 99
APPD. BY: NRG	24 NOV 99
CLIENT APPR.	

KEMWorks TECHNOLOGY, INC.
5935 IMPERIAL PARKWAY, SUITE 108
MULBERRY, FLORIDA USA
(863) 648-5368 FAX (863) 647-8219
www.kemworks.com

PROJ. MGR.	CLIENT	PROJ. NO.
NRG	AGRIUM	1334

Agrium

AGRIUM U.S., INC.
CPO EXPANSION
GRADE CONTROL
PFD

DWG. NO. 26-10-010 REV. E

SUBJECT TO ALL APPLICABLE CONFIDENTIAL BUSINESS INFORMATION PRIVILEGES

EXHIBIT B

Stream Number		1		2		3		4		5		6		7		8		9		10		11		12	
Description		Nitric acid to Oxidation Reactor		#1 SPA to Oxidation Heater		#1 SPA to Oxidation Reactor		#2 SPA to Oxidation Heater		#2 SPA to Oxidation Reactor		Feed to #1 SPA Cooler		Feed to #2 SPA Cooler		Sweep Air		Steam to #1 SPA Heater		Steam to #2 SPA Heater		Cond'sate to Flash Tank		Cond'sate to Flash Tank	
		Average	Design	Average	Design	Average	Design	Average	Design	Average	Design	Average	Design	Average	Design	Average	Design	Average	Design	Average	Design	Average	Design	Average	Design
Flow	t/day	5.95		468.4		468.4		468.4		468.4		468.4		468.4		0.8		13.8		13.8		13.8		13.8	
Flow	lb/hr	496	1006	39031	53670	39031	53670	39031	53670	39031	53670	39031	53670	39031	53670	69.6			1150		1150		1150		1150
Flow	USGPM	0.74	1.5	40	55	40	55	40	55	40	55	40	55	40	55								2.3		2.3
Flow	SCFM															15	15								
Temperature	°F	50		325		375		325		375		350	375	350	375	40	95	403		403		360		360	
Pressure	psig (psia)																	243		243		243		243	
Specific Gravity		1.34		1.95		1.95		1.95				1.95		1.95								0.86		0.86	
Viscosity	cP			50		30		50		30		500375		500375				0.0161		0.0161		0.133		0.133	
% P_2O_5, solids free (dry basis)				68.5		68.5		68.5		68.5		68.5		68.5											
% H_2O		47																							
% HNO_3		53										0.02		0.02											
% Solids, by weight				7.6 (max)		7.6 (max)		7.6 (max)		7.6 (max)		7.6 (max)		7.6 (max)											

GENERAL NOTES

1. DESIGN IS BASED ON INFORMATION PROVIDED BY NU-WEST

HOLDS

LEGEND

- - - - - - FUTURE

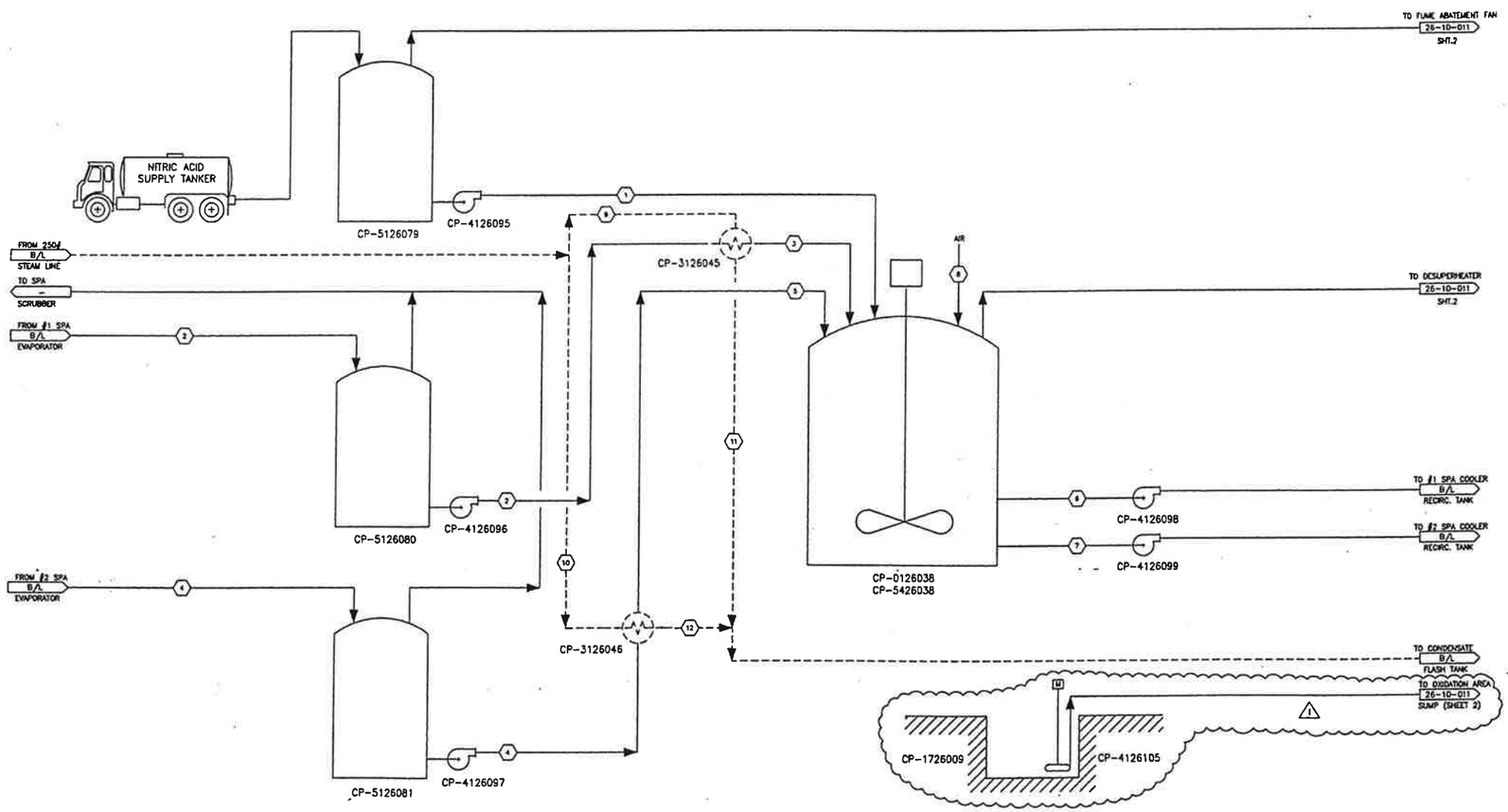

EQUIPMENT ON THIS DRAWING

EQUIPMENT No.	DESCRIPTION	STATUS
CP-0126038	OXIDATION REACTOR AGITATOR	NEW
CP-4126095	NITRIC ACID FEED PUMP	NEW
CP-4126096	No.1 OXIDATION FEED PUMP	NEW
CP-4126097	No.2 OXIDATION FEED PUMP	NEW
CP-4126098	No.1 SPA COOLER FEED PUMP	NEW
CP-4126099	No.2 SPA COOLER FEED PUMP	NEW
CP-5426038	OXIDATION REACTOR	NEW
CP-5126079	NITRIC ACID STORAGE TANK	NEW
CP-5126080	No. 1 SPA PRODUCT TANK	NEW
CP-5126081	No. 2 SPA PRODUCT TANK	NEW
CP-3126045	No. 1 SPA HEATER (FUTURE)	NEW
CP-3126046	No. 2 SPA HEATER (FUTURE)	NEW
CP-1726009	NITRIC ACID SUMP	NEW
CP-4126105	NITRIC ACID SUMP PUMP △1	NEW

ISSUED FOR CONSTRUCTION

DESTROY PREVIOUS PRINTS

AGRA Monenco
CALGARY
ISSUE
APRIL 30 2001

NU-WEST INDUSTRIES INC.
3010 CONDA ROAD SODA SPRINGS, ID 83276

AGRA Monenco
ENGINEERING GLOBAL SOLUTIONS

CPO EXPANSION PROJECT
UNCALCINED ORE OXIDATION
PFD
SHEET 1 OF 2

REV.	REVISION DESCRIPTION	DATE	DRAWN BY	DESIGNED BY	DWG. CHECK	DESIGN CHECK	LEAD ENG./ DEPT. MGR.	P. ENG./ PROJ. MGR.	NO.	DWG. NO.	REFERENCE DRAWINGS
1	REVISED AS NOTED	01/04/30	TL	RAJM					3	26-10-011	UNCALCINED ORE OXIDATION PFD SHEET 2 OF 2
0	ISSUED FOR CONSTRUCTION	00/11/08	PRC	RAJM	RR				2	08-10-102	INSURN. GAS LFD
A	ISSUED FOR CLIENT APPROVAL	00/10/19	PRC	RAJM	RR				1	08-8-15	RAIL FIRE & POSABLE WATER & FUEL GAS CENTRAL AREA U/G PIPING PLAN & DETAILS

ENGINEERING REVIEW		
P. ENG./ PROJ. MGR.		
LEAD ENG./ DEPT. MGR.		
DESIGN CHECK		
DWG. CHECK	RR	00/10/18
DESIGNED BY	RAJM	00/10/04
DRAWN BY	PRC	00/10/04

THIS DRAWING IS THE PROPERTY OF AGRA MONENCO INC. AND HAS BEEN RELEASED FOR CONFIDENTIAL USE ONLY. IT IS NOT TO BE COMMUNICATED OR DISCLOSED TO OTHERS OR TO BE COPIED IN WHOLE OR IN ANY PART EXCEPT WITH THE PRIOR WRITTEN PERMISSION OF AGRA MONENCO INC.

CLIENT APPROVAL BY DATE

AGRA MONENCO DWG. NO. Y600D-704-6-001

PROJECT NO. Y600D

SCALE NTS

DRAWING NO. 26-10-011

REV. 1

AGR-CBI_003860
SUBJECT TO ALL APPLICABLE CONFIDENTIAL BUSINESS INFORMATION PRIVILEGES

EXHIBIT B

Stream Number / Description		13 Vapor from Sparger		14 Feed to Scrubber		15 Scrubber Tank Discharge		16 Scrubber Discharge		17 Wash Acid to Cooler		18 Wash Acid from Cooler		19 Wash Acid to Scrubber		20 Wash Acid to Demineralizer		21 Water to Cooler		22 Water from Cooler		23 Raw Water to Scrubber	
		Average	Design	Average	Design	Average	Design	Average	Design	Average	Design	Average	Design	Average	Design	Average	Design	Average	Design	Average	Design	Average	Design
Flow	L/min	9.65	10.29	11.80	41.00	144.98		3.95		153.08		153.04		156.51		5.70		153.49		153.49		0.90	
Flow	lb/hr	371	858	892	3321	13913		377		13048		13048		13047		57		11958		11958		50	
Flow	USGPM					38.3	30.0	0.8	10.0	35.8	30.0	35.8	30.0	34.9	30.0	1.6	5.0	33.8	50.0	33.8	50.0	0.1	10.0
Flow	SCFM	137	254	144	271.00																		
H_2O (Vapour)	lb/hr	272	543	292	585																		
H_2O (Liquid)	lb/hr			472	2300	13185		309		12956		12956		12363		493		11958		11958		50	
O_2 (Vapour)	lb/hr	16.0	16.0	16.0	16.0																		
N_2 (Vapour)	lb/hr	105.3	163.3	105.3	163.3																		
NO (Vapour)	lb/hr	1.3	1.3	1.3	1.3																		
NO_2 (Vapour)	lb/hr	17.3	17.3	17.3	17.3																		
CO (Vapour)	lb/hr	5.5	11.1	5.5	11.1																		
CO_2 (Vapour)	lb/hr	48.7	98.7	48.7	98.7																		
HNO_3	lb/hr			20.1	161.4	536.7		12.8		524.1		524.1		504.0		20.1							
T (Vapour)	lb/hr	5.0	5.0	5.0	5.0																		
T (Liquid)	lb/hr			8.0	40.2	313.0		5.0		308.0		308.0		300.0		8.0							
NH_3	lb/hr																						
H_2O	SCFM	96.88	193.76	104.39	208.77																		
O_2	SCFM	3.31	3.31	3.31	3.31																		
N_2	SCFM	24.15	37.81	24.15	37.81																		
NO	SCFM	0.37	0.37	0.37	0.37																		
NO_2	SCFM	2.41	2.41	2.41	2.41																		
CO	SCFM	1.26	2.55	1.26	2.55																		
CO_2	SCFM	7.11	14.40	7.11	14.41																		
T	SCFM	1.8	1.8	1.8	1.8																		
NH_3	SCFM																						
Natural Gas	lb/hr																						
Temperature	°C	100		185	192	122		122		122		100		100		100		75		100		50	
Pressure	psig (psia)	(11.5)	(11.5)	(11.5)	(11.5)																		
Specific Gravity						1.05		1.00		1.00		1.00		1.00		1.00		1.00		1.00		1.00	
Viscosity	cP																						

Stream Number / Description		25 Furnace Inlet Scrubber		26 Furnace In SCR Unit		27 Natural Gas to Burner		28 Air to Compressor		29 Air From Compressor		30 Hot Furnace In SCR Unit		31 Ammonia to In SCR Unit		32 Furnace Inlet SCR Unit		33 Furnace to Stack	
		Average	Design	Average	Design	Average	Design	Average	Design	Average	Design	Average	Design	Average	Design	Average	Design	Average	Design
Flow	L/min	3.33	1.83	3.33	1.83	0.05		33.08		33.08		35.46		0.04		35.51		35.51	
Flow	lb/hr	194	302	194	302	1		1824		1824		2132		2		2134		2134	
Flow	USGPM	30		30										0.01					
Flow	SCFM	61	78.80	61	78.80	1.61	11.50	432	863	432	863	474	863	1.4	2.8	475	865.00	475	865
H_2O (Vapour)	lb/hr	10.7	53.5	10.7	53.5			24.9		24.9		44.6				50.4		50.4	
H_2O (Liquid)	lb/hr																		
O_2 (Vapour)	lb/hr	16	16	16	16			442.33		442.33		442.33				438.50		438.50	
N_2 (Vapour)	lb/hr	105.29	163.3	105.29	163.3			1436.85		1436.85		1542.15				1547.95		1547.95	
NO (Vapour)	lb/hr	0.25	0.25	0.25	0.25							0.25				0.52	0.52	0.52	
NO_2 (Vapour)	lb/hr	3.47	3.47	3.47	3.47							3.47							
CO (Vapour)	lb/hr	5.5	11.1	5.5	11.1							5.50				5.55	1.11	5.55	
CO_2 (Vapour)	lb/hr	48.7	98.7	48.7	98.7							98.70				97.5		97.5	
HNO_3	lb/hr																		
T (Vapour)	lb/hr	0.01	0.01	0.01	0.01														
T (Liquid)	lb/hr																		
NH_3	lb/hr													3.44					
H_2O	SCFM	3.82	19.09	3.82	19.09			8.88		8.88		13.91				17.86		17.86	
O_2	SCFM	3.31	3.31	3.31	3.31			88.76		88.76		90.76				88.19		88.19	
N_2	SCFM	24.15	37.81	24.15	37.81			334.09		334.09		356.24				356.57		356.57	
NO	SCFM	0.31	0.31	0.31	0.31							0.31				0.11		0.11	
NO_2	SCFM	0.48	0.48	0.48	0.48							0.48							
CO	SCFM	1.26	2.54	1.26	2.54							1.26				0.13		0.13	
CO_2	SCFM	7.11	14.41	7.11	14.41							8.31				11.32		11.32	
T	SCFM																		
NH_3	SCFM													1.38					
Natural Gas	lb/hr					4.00													
Temperature	°C	95	130	95	130	80		~40/90		100		536		0/90 18/170		718		300	
Pressure	psig (psia)													0.8C				11.8	
Specific Gravity																			
Viscosity	cP																		

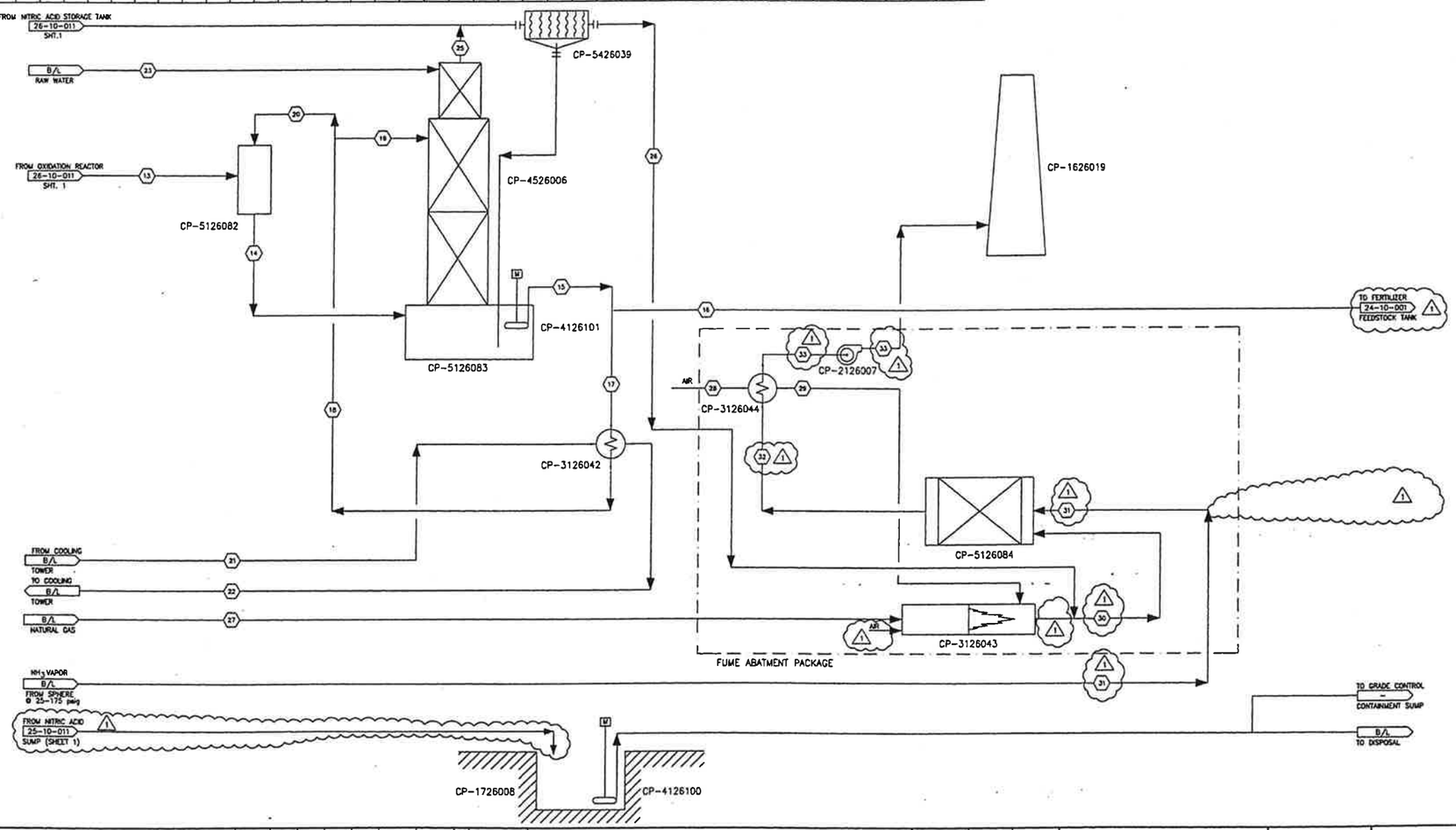

GENERAL NOTES

1. DESIGN IS BASED ON INFORMATION PROVIDED BY NU-WEST

HOLDS

EQUIPMENT ON THE DRAWING

EQUIPMENT No.	DESCRIPTION	STATUS
CP-1626019	OXIDATION SCRUBBER STACK	NEW
CP-1726008	OXIDATION AREA SUMP	NEW
CP-2126007	FUME ABATEMENT FAN	NEW
CP-3126042	ACID COOLER	NEW
CP-3126043	FUME ABATEMENT HEATER	NEW
CP-3126044	FUME ABATEMENT HEAT EXCHANGER	NEW
CP-4126100	OXIDATION AREA SUMP PUMP	NEW
CP-4126101	OXIDATION SCRUBBER PUMP	NEW
CP-4526006	OXIDATION SCRUBBER	NEW
CP-5126082	DESUPERHEATER	NEW
CP-5126083	OXIDATION SCRUBBER TANK	NEW
CP-5126084	FUME ABATEMENT CATALYTIC CONVERTER	NEW
~~CP-3126000~~	~~FUME ABATEMENT HEATER COMBUSTION AIR FAN~~	~~NEW~~
CP-5426039	OXIDATION KNOCKOUT POT	NEW

ISSUED FOR CONSTRUCTION

DESTROY PREVIOUS PRINTS

AGRA Monenco
CALGARY
ISSUE
APRIL 30 2001

NU-WEST INDUSTRIES INC.
3010 CONDA ROAD SODA SPRINGS, ID 83276

AGRA Monenco
ENGINEERING GLOBAL SOLUTIONS

CPO EXPANSION PROJECT
UNCALCINED ORE OXIDATION
PFD
SHT 2 OF 2

REV.	REVISION DESCRIPTION	DATE	DRAWN BY	DESIGNED BY	DWG. CHECK	DESIGN CHECK	LEAD ENG./ DEPT. MGR.	F. ENG./ PROJ. MGR.
1	REVISED A SNOTED	01/04/30	TL	RAJM				
0	ISSUED FOR CONSTRUCTION	00/11/06	PRC	RAJM	RR			
A	ISSUED FOR CLIENT APPROVAL	00/10/19	PRC	RAJM	RR			

NO.	DWG. NO.	REFERENCE DRAWINGS
8		
7		
6		
5		
4		
3	26-10-011	UNCALCINED ORE OXIDATION PFD SHEET 1 OF 2
2	00-10-102	NATURAL GAS UFD
1	00-6-15	BWL FIRE & POTABLE WATER & FUEL GAS CONTROL AREA U/G PIPING PLAN & DETAILS

ENGINEERING REVIEW		
F. ENG./ PROJ. MGR.		
LEAD ENG./ DEPT. MGR.		
DESIGN CHECK		
DWG. CHECK	RR	00/10/04
DESIGNED BY	RAJM	00/10/04
DRAWN BY	PRC	00/10/04

THIS DRAWING IS THE PROPERTY OF AGRA MONENCO INC. AND HAS BEEN RELEASED FOR CONFIDENTIAL USE ONLY. IT IS NOT TO BE COMMUNICATED OR DISCLOSED TO OTHERS OR TO BE COPIED IN WHOLE OR IN ANY PART EXCEPT WITH THE PRIOR WRITTEN PERMISSION OF AGRA MONENCO INC.

CLIENT APPROVAL BY DATE

AGRA MONENCO DWG. NO. Y600D-704-6-002
PROJECT NO. Y600D
SCALE NTS
DRAWING NO. 26-10-011
REV. 1

AGR-CBI_003861
SUBJECT TO ALL APPLICABLE CONFIDENTIAL BUSINESS INFORMATION PRIVILEGES

EXHIBIT B

Stream Number	26K 01	26K 02	26K 03	26K 04	26K 05	26K 06	26K 07	26K 08	26K 09	26K 10	26K 11	26K 12	26K 13	26K 14	26K 15	26K 16	26K 17	26K 18	26K 19	26K 20	26K 21
DESCRIPTION	RAW WATER TO MIST PAD	POND WATER TO SCRUBBER	FUMES FROM #1 SPA PRODUCT TANK	FUMES FROM C SEAL TANK	FUMES FROM #4,#5 SEAL TANK	FUMES FROM #6,7,8 SEAL TANK	FUMES FROM #2 SPA PRODUCT TANK	FUMES FROM SPA SUMP	FUMES FROM FILTERS (FUTURE)	FUMES FROM TANK #26	FUMES FROM COND. H2O COLLECTION TANK	TOTAL FUMES TO SCRUBBER	POND WATER TO 1ST STAGE	POND WATER TO 2ND STAGE	POND WATER TO 3RD STAGE	SCRUBBER OUTLET TO FAN	SCRUBBER FAN OUTLET TO STACK	POND WATER RETURN	RAW WATER TO SCRUBBER SPRAY TANK	SCRUBBER SPRAY PUMP DISCHARGE	L.P. STEAM
Average Flow lb P2O5/day																					
Average Flow l/day																					
Average Flow l/hr																					
Design Flow lb/hr			153	765	765	765	153	12,244	12,281	4,591	765	37,254				36,154	36,162				1,000
Average Flow USGPM	90	675											225	225	225			765	4	45	
Design Flow USGPM	90	675											225	225	225			770	5	50	
Design Flow ACFM			50	250	250	250	50	4,000	4,000	1,500	250	12,250				12,000	12,300				
Temperature °F	50	92	130	130	130	130	130	130	130	130	130	130	92	92	92	121	121	101	50		250
Pressure psig (psia)	75	15	-1in H2O	-1in H2O	-1in H2O	-1in H2O	-1in H2O	-1in H2O	-1in H2O	-1in H2O	-1	-3in H2O	15	15	15	-11in H2O	1in H2O	79.6	75	31.5	15
Density lb/ft3	62.4	62.4	0.051	0.051	0.051	0.051	0.051	0.051	0.051	0.051	0.051	0.051	62.4	62.4	62.4	0.049	0.049	62.4	62.4	62.4	0.1
Specific Gravity	1.00	1.00											1.00	1.00	1.00			1.00	1.00	1.00	
Viscosity cP	1	1											1	1	1			1	1	1	
% P2O5 (solids free)																					
% H2O																					
% H2SO4																					
% Solids by Weight																					
% Solids by Volume																					

EQUIP. NO.	DESCRIPTION	STATUS
CP-1626002	SPA SCRUBBER STACK	NEW
CP-2126004	SPA SCRUBBER FAN	NEW
CP-4126073	SPA RETURN WATER PUMP	NEW
CP-4126074	SPA SCRUBBER SPRAY PUMP	NEW
CP-4526002	SPA SCRUBBER	NEW
CP-5126054	SPA SCRUBBER SPRAY TANK	NEW
CP-5126055	SPA SCRUBBER TANK	NEW

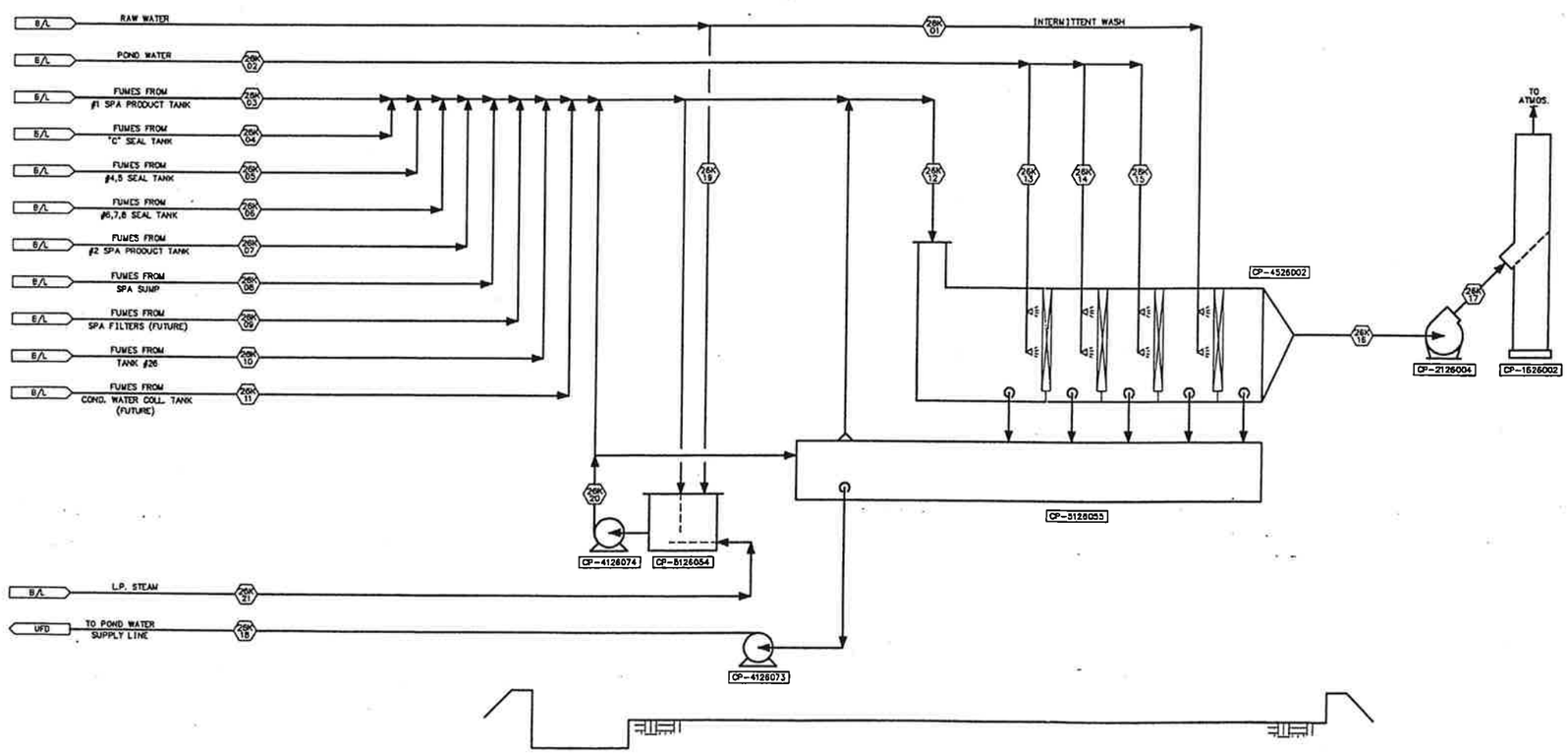

REFERENCE DRAWINGS	REFERENCE DRAWINGS	REV.	REVISION	DATE	BY

DRAWING HISTORY	DATE	REV.
FOR REVIEW & COMMENT	02 AUG 99	A
FOR REVIEW & COMMENT	10 AUG 99	B

THIS DRAWING, THE DATA AND INFORMATION DISPLAYED THEREON ARE THE PROPERTY OF KEMWorks Technology, Inc. THIS DRAWING MAY NOT BE USED, COPIED OR DISCLOSED EXCEPT AS APPROVED BY KEMWorks Technology, Inc. UPON REQUEST, THIS DRAWING AND ALL COPIES MADE OF SAME, SHALL BE RETURNED IMMEDIATELY TO KEMWorks Technology, Inc.

SCALE NONE		DATE
DES. BY	NRG	02 JUL 99
DRWN. BY	JKC	06 JUL 99
CHKD. BY	SMN	30 JUL 99
APPD. BY		

KEMWORKS TECHNOLOGY, INC.
5625 IMPERIAL PARKWAY, SUITE 104
BALSBERRY, FLORIDA USA
(941) 648-8369 FAX (941) 647-8210
www.kemworks.com

Agrium

AGRIUM U.S., INC.
POCATELLO, IDAHO
SPA
SCRUBBER PFD

PROJ. MGR.	CLIENT	PROJ. NO.	DWG. NO.	REV.
NRG	AGRIUM	1310	26-10-020	B

AGR-CBI_003862
SUBJECT TO ALL APPLICABLE CONFIDENTIAL BUSINESS INFORMATION PRIVILEGES

EXHIBIT B

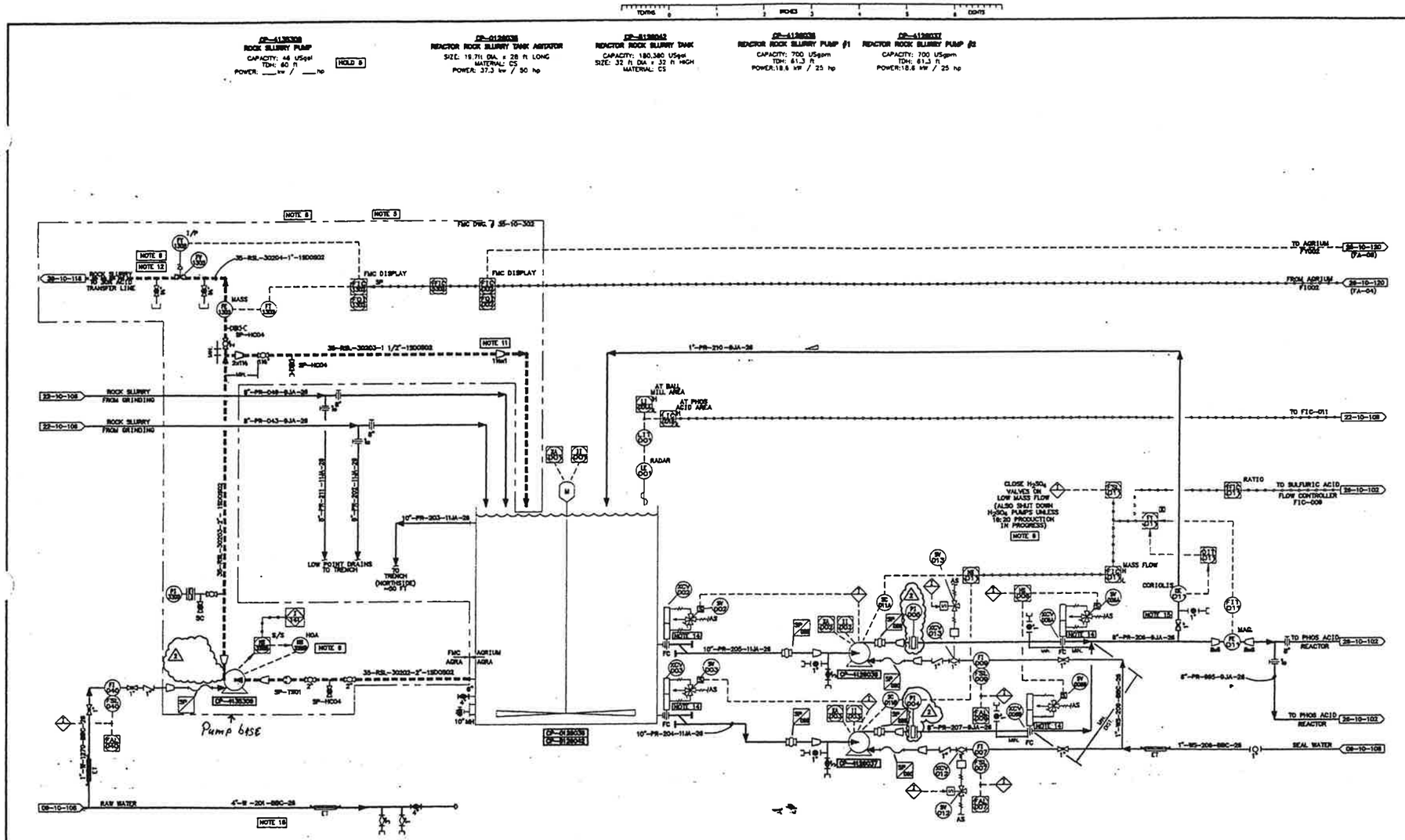

GENERAL NOTES

1. DELETED
2. ALL SLURRY LINES TO HAVE NO POCKETS.
3. LOCATE VALVES AS CLOSE TO TEES AS POSSIBLE.
4. LINE 35-RSL-30204 MUST BE AS SHORT AS POSSIBLE.
5. BASIC ENGINEERING BY JACOBS ENG.; DETAIL ENGINEERING BY AMI.
6. 16:20 PRODUCTION CAN BE DETERMINED BY LOOKING AT THE FLOW RATE OF H_2SO_4 TO THE PRE-NEUTRALIZER ON TAG # QIC-009.
7. KEMWORKS ISSUED REV. C WITH P.E. STAMP.
   EFFECTIVE MARCH 24th, 2000, THIS DRAWING IS BEING MAINTAINED BY AMI.
8. FOR DETAIL REFER TO FML P&ID 35-10-302. INFORMATION ON THIS P&ID IS DUPLICATED ON P&ID 35-10-302.
9. LINE 35-RSL-30204 MUST BE AS SHORT AS POSSIBLE.
10. MINIMIZE POCKETS.
11. REDUCER TO BE LOCATED AT END OF LINE.
12. NO POCKETS IN 35-RSL-30204.
13. FOR FMC GENERAL NOTES AND SYMBOLS REFER TO DRAWINGS # 35-10-098 AND # 35-10-099.
14. KNIFE GATE VALVE FAIL CLOSED ON SIGNAL FAILURE ONLY.
15. A PINCH VALVE WILL BE INSTALLED TO THROTTLE THE FLOW TO THE DENSITY METER TO 12 US gpm ON THE LINE 1"-PR-210
16. PROVIDE LOW POINT DRAINS.

HOLDS

5. VENDOR DATA (SMG).

RMEC MAY1
MERIT MAY1
MERIT AFTER MAY1

EQUIPMENT ON THIS DRAWING

EQUIP. NO.	DESCRIPTION	STATUS
CP-0128036	REACTOR ROCK SLURRY TANK AGITATOR	NEW
CP-4128038	REACTOR ROCK SLURRY PUMP #1	NEW
CP-4128037	REACTOR ROCK SLURRY PUMP #2	NEW
CP-4136308	ROCK SLURRY PUMP	NEW
CP-0128042	REACTOR ROCK SLURRY TANK	NEW

ISSUED FOR CONSTRUCTION

DESTROY PREVIOUS PRINTS

AGRA Monenco
CALGARY
ISSUE
FEB 23 2001

LEGEND:
- - - - - - = INSTALLED COST BY FMC ENGINEERING DESIGN AND CONSTRUCTION BY AMI

REV.	REVISION DESCRIPTION	DATE	DRAWN BY	DESIGNED BY	DWG. CHECK	DESIGN CHECK	LEAD ENG./ DEPT. MGR.	P. ENG./ PROJ. MGR.
2	REVISED AS NOTED	01/02/23	TDV	RAJM	SSK	RR		
	REVISED AS NOTED RE-ISSUED FOR CONSTRUCTION	00/12/06	PPC	RAJM	SSK	RR	RR	LAF
	ISSUED FOR CONSTRUCTION	00/06/30	AB	RAJM	SSK	RR		
F	GENERAL REVISIONS & HAZOP RECOMMENDATIONS	00/05/23	AB	RAJM	SSK	RR		
E	ISSUED FOR TIE-REVIEW	00/03/01	AB	RAJM	RR			
D	CHANGE "200" FOR "043" / ISSUED FOR DESIGN	00/02/17	RPL					
C	ADDED ROCK SLURRY PUMP (NOTE 5) / FOR DETAIL DESIGN	00/02/08	NPG					
B	FOR DETAIL DESIGN	00/01/27						

NO.	DWG. NO.	REFERENCE DRAWINGS
8		
7	35-10-098/099	FMC PIPING AND INSTR. SYMBOLS AND NOMENCLATURE P&IDs
6	35-10-302	FMC PURIFIED PHOSPHORIC ACID PLAT
5	26-10-118	30X P205 STORAGE TANK #18
4	26-10-102	PHOS ACID REACTOR
3	22-10-106	ROCK GRINDING GROUND ROCK STORAGE
2	09-10-106	FRESHWATER
1	09-10-100	STANDARD P&ID SYMBOLS

ENGINEERING REVIEW		
P. ENG./ PROJ. MGR.		
LEAD ENG./ DEPT. MGR.		
DESIGN CHECK	KEMWORKS	01/02/23
DWG. CHECK	MDW	99/12/13
DESIGNED BY	APH	99/12/09
DRAWN BY	JCX	99/12/10

THIS DRAWING, THE KNOW-HOW AND INFORMATION DISCLOSED HEREIN ARE THE PROPERTY OF KEMWORKS TECHNOLOGY, INC. AND AGRA MONENCO INC. THIS DRAWING MAY NOT BE USED, COPIED OR DISCLOSED EXCEPT AS APPROVED BY KEMWORKS TECHNOLOGY, INC. AND AGRA MONENCO INC. UPON DEMAND BY EITHER PARTY THIS DRAWING AND ALL COPIES HEREOF SHALL BE RETURNED IMMEDIATELY.

KEMWORKS TECHNOLOGY, INC.
8888 INTERNATIONAL PARKWAY, SUITE 100
JACKSONVILLE, FLORIDA, USA
(904) 646-0360 FAX (904) 647-4919
www.kemworks.com

CLIENT APPROVAL BY DATE: CRH 00/05/24

NU-WEST INDUSTRIES INC.
3010 CONDA ROAD SODA SPRINGS, ID 83276

AGRA Monenco
ENGINEERING GLOBAL SOLUTIONS

CPO EXPANSION PROJECT
PHOS ACID ROCK SLURRY P&ID

AGRA MONENCO DWG. NO.: Y600D-100-6-101
PROJECT NO.: Y600D
SCALE: NONE
DRAWING NO.: 26-10-101
REV.: 2

CAD FILE NAME: G:\Y6000\CAD\PHOS\ACID\P&ID\10061101.dwg
LAST UPDATE: 01/03/20 7:20am

AGR-CBI_003863
SUBJECT TO ALL APPLICABLE CONFIDENTIAL BUSINESS INFORMATION PRIVILEGES

EXHIBIT B

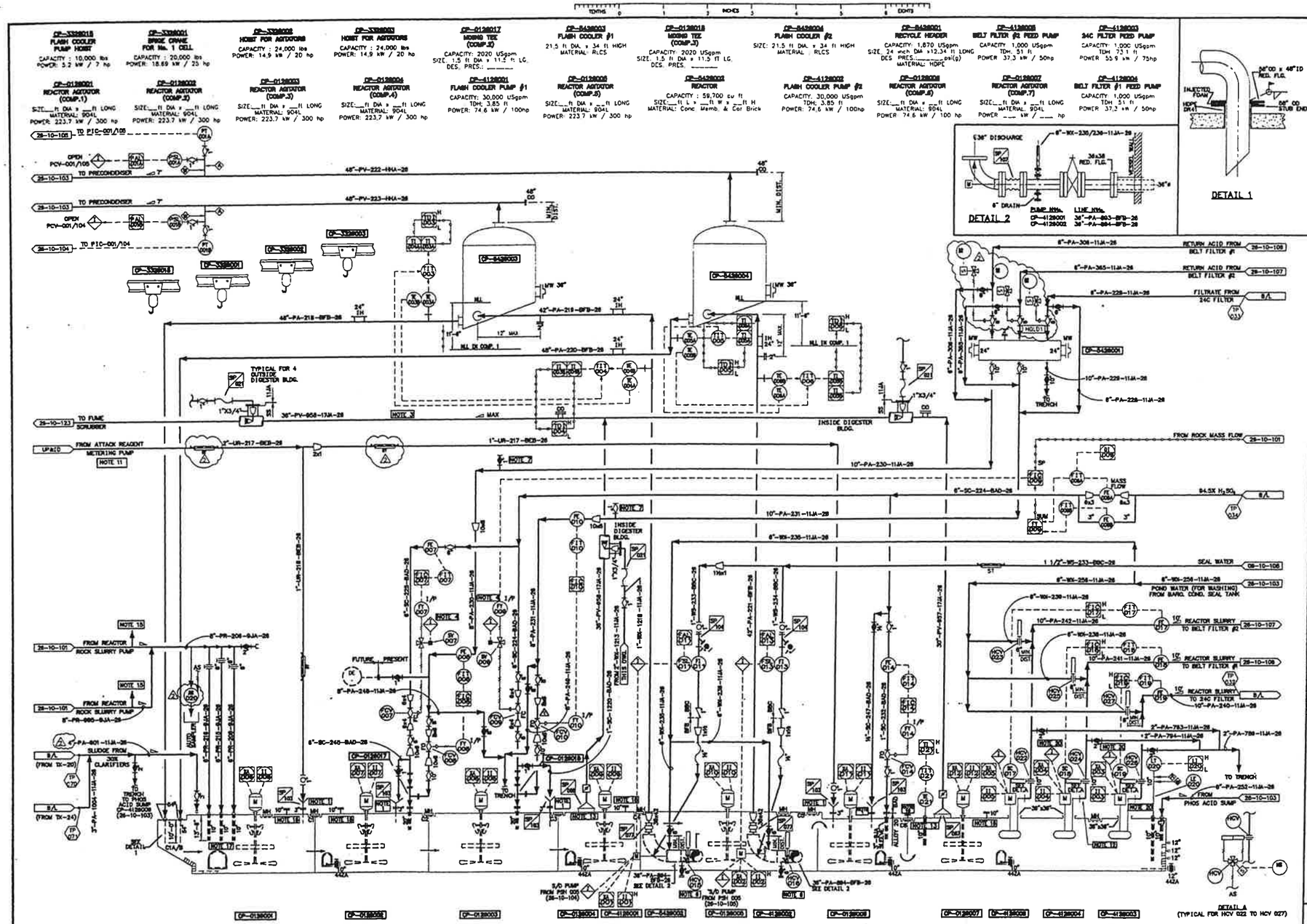

GENERAL NOTES

1. ALLOY 20, FUNNEL.
2. ALL DIAPHRAGM VALVES TO BE STRAIGHT THROUGH TYPE.
3. NO FLAT SECTIONS OR POCKETS IN DUCT.
4. CLOSE VALVE ON ROCK SLURRY LOW FLOW. ADD RESTRICTION TO SOLENOID TO LIMIT SPEED OF VALVE CLOSURE.
5. CONTROL VALVE AND INSTRUMENT SIZES ARE PRELIMINARY. REDUCER SIZES TO BE CHECKED IN DETAIL ENGINNERING.
6. SEE P&ID 26-10-119 FOR HYDRAULIC SYSTEM.
7. THIS IS A LOW POINT DRAIN. PIPING TO LOCATE ACCORDINGLY.
8. SAFETY SHOWERS AND EYE WASH STATIONS TO BE DETERMINED DURING DETAIL ENGINEERING.
9. DELETED.
10. KEMWORKS ISSUED REV. C WITH P.E. STAMP. EFFECTIVE MARCH 24th, 2000, THIS DRAWING IS BEING MAINTAINED BY AMI.
11. INETERLOCK METERING PUMP TO ROCK SLURRY FLOW TO REACTOR TO SHUT DOWN METERING PUMP ON ROCK SLURRY "NO FLOW" CONDITION.
12. BFB (TYPICAL) FROM PUMP TO VALVE FOR CP-4128003, CP-4128004 AND CP-4128005.
13. TRANSITION PIECE FROM RECTANGULAR OPENING TO CIRCULAR PIPE.
14. DUCTING SPRAYS FROM DIGESTER TO SCRUBBER ARE TO BE BETE WT RIGHT ANGLE HOLLOW CONE MODEL 3/4" WT 2000 AT EVERY 10 FEET.
15. HIGH POINT VENT.
16. SPARE NOZZLE 10" HDPE WITH BLIND FLANGE.
17. CHAMFER BOTTOM OF PIPE @ 45° AND TURN TOWARDS AGITATOR.
18. 10" 904L FOR FUTURE TEMPERATURE ELEMENT.
19. PROVISION FOR MANUAL SAMPLING POINT.
20. USE CD4 MCU TYPE VALVE FOR ALL PHOS. ACID SERVICE (PA LINES.)

HOLDS

1. VALVE TO BE ACTUATED, PENDING TREND APPROVAL (SSK/CRH/FRB).
4. ALL VENDOR INFORMATION (SMC).

EQUIPMENT ON THIS DRAWING

EQUIP. NO.	DESCRIPTION	STATUS
CP-0126001	REACTOR AGITATOR (COMP. 1)	NEW
CP-0126002	REACTOR AGITATOR (COMP. 2)	NEW
CP-0126003	REACTOR AGITATOR (COMP. 3)	NEW
CP-0126004	REACTOR AGITATOR (COMP. 4)	NEW
CP-0126005	REACTOR AGITATOR (COMP. 5)	NEW
CP-0126006	REACTOR AGITATOR (COMP. 6)	NEW
CP-0126007	REACTOR AGITATOR (COMP. 7)	NEW
CP-0126017	MIXING TEE (COMP. 2)	NEW
CP-0126018	MIXING TEE (COMP. 3)	NEW
CP-3328001	BRIDGE CRANE FOR No. 1 CELL	NEW
CP-3328002	HOIST FOR AGITATORS	NEW
CP-3328003	HOIST FOR AGITATORS	NEW
CP-3328018	FLASH COOLER PUMP HOIST	NEW
CP-4126001	FLASH COOLER PUMP	NEW
CP-4126002	FLASH COOLER PUMP	NEW
CP-4126003	24C FILTER FEED PUMP	NEW
CP-4126004	BELT FILTER #1 FEED PUMP	NEW
CP-4126005	BELT FILTER #2 FEED PUMP	NEW
CP-5428001	RECYCLE HEADER	NEW
CP-5428002	REACTOR	NEW
CP-5428003	FLASH COOLER	NEW
CP-5428004	FLASH COOLER	NEW

ISSUED FOR CONSTRUCTION

DESTROY PREVIOUS PRINTS

AGRA Monenco
CALGARY
ISSUE
MAY 14 2001

NU-WEST INDUSTRIES INC.
3010 CONDA ROAD SODA SPRINGS, ID 83276

AGRA Monenco
ENGINEERING GLOBAL SOLUTIONS

CPO EXPANSION PROJECT
1325 TPD PHOS ACID REACTOR
P&ID

CLIENT APPROVAL BY DATE

AGRA MONENCO DWG. NO. Y600D-100-6-102

PROJECT NO. SCALE

DRAWING NO. REV.

CAD FILE NAME: G:\Y600D\CAD\PIP\PROC\AGRAP&ID\1006102.dwg

LAST UPDATE: 01/05/18 10:20am

REV.	REVISION DESCRIPTION	DATE	DRAWN BY	DESIGNED BY	DWG. CHECK	DESIGN CHECK	LEAD ENG./DEPT. MGR.	P. ENG./PROJ. MGR.
2	REVISED AS NOTED	01/05/14	LH	RAJM	SSK	RR		
1	REVISED AS NOTED RE-ISSUED FOR CONSTRUCTION	00/12/06	PRC	RAJM	SSK	RR		
0	ISSUED FOR CONSTRUCTION	00/06/06	AB	RAJM	SSK	RR		
F	REVISED AS NOTED	00/05/26	AB	RAJM	SSK	RR		
E	GENERAL REVISIONS	00/04/27	AB	RAJM	SSK	RR		
D	ISSUED FOR TIE-IN REVIEW	00/03/27	AB	RAJM	RR			
C	ISSUED FOR DESIGN	00/02/17	RPL					
B	FOR DETAIL DESIGN	00/01/27						

NO.	DWG. NO.	REFERENCE DRAWINGS
7		
6	26-10-123	PHASE 2 VENTILATION DUCTING SHT. 3
5	26-10-107	PHOS ACID BELT FILTER #2
4	26-01-106	PHOS ACID BELT FILTER #1
3	26-10-103	PHOS ACID FLASH COOLERS PRECONDENSERS
2	26-10-101	PHOS ACID ROCK SLURRY
1	09-10-100	STANDARD P&ID SYMBOLS

ENGINEERING REVIEW

P. ENG./PROJ. MGR.		
LEAD ENG./DEPT. MGR.		
DESIGN CHECK	KEMWORKS	00/02/11
DWG. CHECK	MDW	99/12/13
DESIGNED BY	APH	99/12/08
DRAWN BY	JKC	99/12/09

THIS DRAWING, THE KNOW-HOW AND INFORMATION DISCLOSED HEREIN ARE THE PROPERTY OF KEMWORKS TECHNOLOGY, INC AND AGRA MONENCO INC. THIS DRAWING MAY NOT BE USED, COPIED OR DISCLOSED EXCEPT AS APPROVED BY KEMWORKS TECHNOLOGY, INC. AND AGRA MONENCO INC. UPON DEMAND BY EITHER PARTY, THIS DRAWING AND ALL COPIES HEREOF SHALL BE RETURNED IMMEDIATELY.

KEMWORKS TECHNOLOGY, INC.
8888 INTERNATIONAL PARKWAY, SUITE 180
PLANTATION, FLORIDA, USA
(954) 846-2380 FAX (954) 587-8410
www.kemworks.com

EXHIBIT B

AGR-CBI_003864
SUBJECT TO ALL APPLICABLE CONFIDENTIAL BUSINESS INFORMATION PRIVILEGES

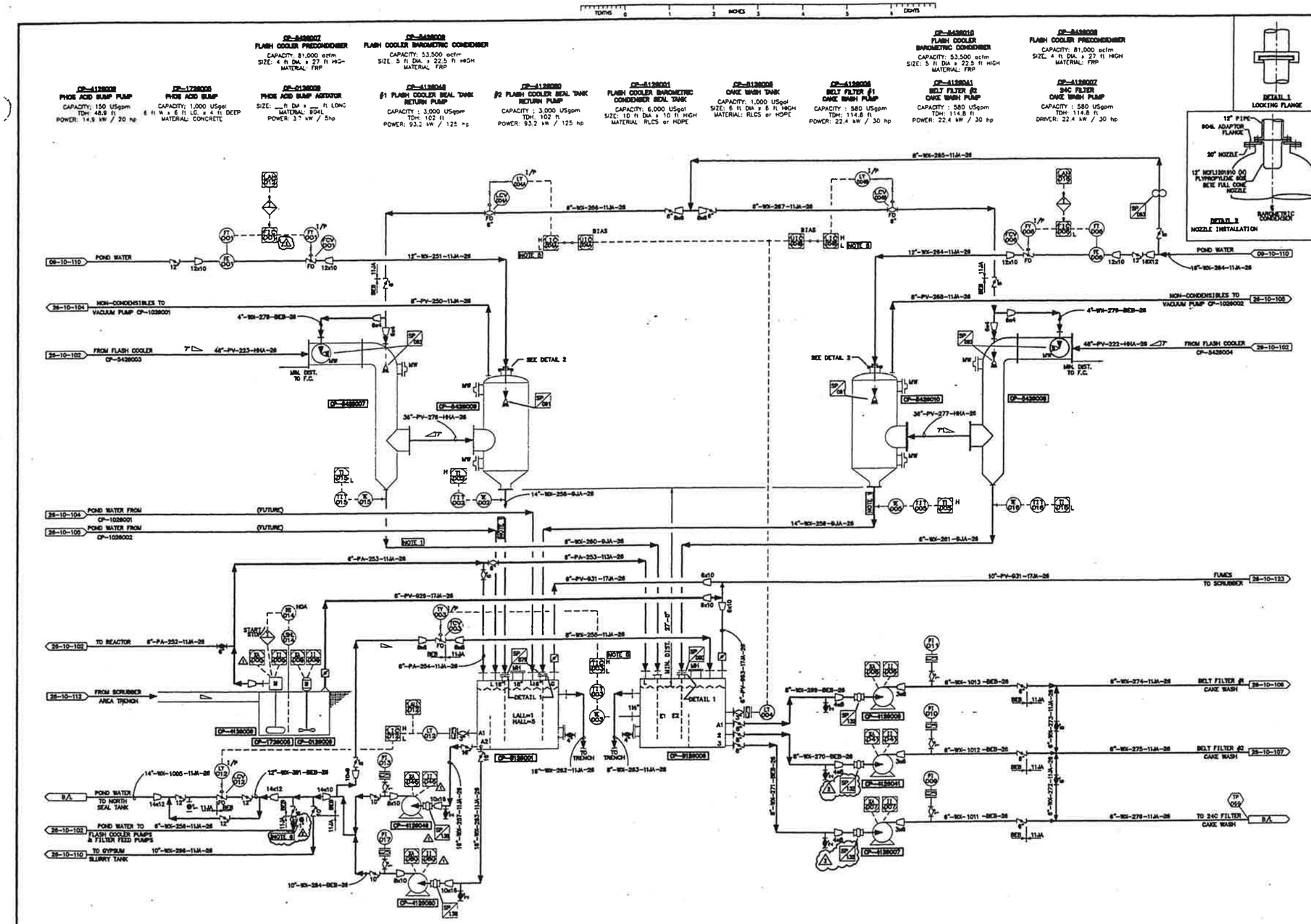

GENERAL NOTES

1. DOWNLEG TO BE VERTICAL AND MINIMUM 27' LONG.
2. DELETED.
3. DELETED.
4. KEMWORKS ISSUED REV. C WITH P.E. STAMP. EFFECTIVE MARCH 24th, 2000, THIS DRAWING IS BEING MAINTAINED BY AMI.
5. PROVIDE LOW SELECT SOFT CHANGOVER FROM LEVEL CONTROL IN CP-5128008 VIA LIC-004A/B TO CONTROL VIA TIC-003 ON LOW LEVEL.
6. LOW POINT DRAIN.

HOLDS

EQUIPMENT ON THIS DRAWING

EQUIP. NO.	DESCRIPTION	STATUS
CP-0128008	PHOS ACID SUMP AGITATOR	NEW
CP-1728005	PHOS ACID SUMP	NEW
CP-4128006	BELT FILTER #1 CAKE WASH PUMP	NEW
CP-4128007	24C FILTER CAKE WASH PUMP	NEW
CP-4128009	PHOS ACID SUMP PUMP	NEW
CP-4128041	BELT FILTER #2 CAKE WASH PUMP	NEW
CP-4128048	#1 FLASH COOLER SEAL TANK RETURN PUMP	NEW
CP-4128080	#2 FLASH COOLER SEAL TANK RETURN PUMP	NEW
CP-5128001	FLASH COOLER BAROMETRIC CONDENSER SEAL TANK	NEW
CP-5128008	CAKE WASH TANK	NEW
CP-5428007	FLASH COOLER PRECONDENSER	NEW
CP-5428008	FLASH COOLER PRECONDENSER	NEW
CP-5428009	FLASH COOLER BAROMETRIC CONDENSER	NEW
CP-5428010	FLASH COOLER BAROMETRIC CONDENSER	NEW

ISSUED FOR CONSTRUCTION

DESTROY PREVIOUS PRINTS

AGRA Monenco
CALGARY
ISSUE
FEB 23 2001

NU-WEST INDUSTRIES INC.
3010 CONDA ROAD SODA SPRINGS, ID 83276

AGRA Monenco
ENGINEERING GLOBAL SOLUTIONS

CPO EXPANSION PROJECT
PHOS ACID FLASH COOLER
PRECONDENSERS P&ID

DRAWING NO. 26-10-103 REV. 2

AGRA MONENCO DWG. NO. Y600D-100-6-103
PROJECT NO. Y600D
SCALE NONE

CLIENT APPROVAL BY DATE CRN 00/05/31

REV.	REVISION DESCRIPTION	DATE	DRAWN BY	DESIGNED BY	ENG. CHECK	DESIGN CHECK	LEAD ENG./DEPT. MGR.	P. ENG./PROJ. MGR.
2	REVISED AS NOTED	01/02/23	TDV	RAJW	SSK			
1	REVISED AS NOTED RE-ISSUED FOR CONSTRUCTION	00/11/17	PRC	RAJW	SSK	RR		
0	ISSUED FOR CONSTRUCTION	00/06/06	AB	RAJW	SSK	RR		
E	GENERAL REVISIONS & HAZOP RECOMMENDATIONS	00/05/26	AB	RAJW	SSK	RR		
D	ISSUED FOR TIE-IN REVIEW	00/03/27	AB	RAJW	RR			
C	ISSUED FOR DESIGN	00/02/17	RPL					
B	FOR DETAIL DESIGN	00/01/27						
A	FOR APPROVAL	99/12/13						

NO.	DWG. NO.	REFERENCE DRAWINGS
8	26-10-123	PHASE 2 VENTILATION DUCTING SHT.3
7	26-10-112	PHOS ACID SCRUBBER
6	26-10-110	PHOS ACID GYPSUM SLURRY TANK
5	26-10-107	PHOS ACID BELT #2
4	26-10-106	PHOS ACID BELT #1
3	26-10-105	PHOS ACID FLASH COOLERS VACUUM PUMP #2
2	26-10-104	PHOS ACID FLASH COOLERS VACUUM PUMP #1
1	26-10-102	PHOS ACID REACTOR

ENGINEERING REVIEW

P. ENG./PROJ. MGR.	LAF	00/06/08
LEAD ENG./DEPT. MGR.	RR	00/06/08
DESIGN CHECK	KEMWORKS	00/02/17
DWG. CHECK	MDN	99/12/13
DESIGNED BY	APH	99/12/09
DRAWN BY	JKC	99/12/10

THIS DRAWING, THE KNOW-HOW AND INFORMATION DISCLOSED HEREIN ARE THE PROPERTY OF KEMWORKS TECHNOLOGY, INC. AND AGRA MONENCO INC. THIS DRAWING MAY NOT BE USED, COPIED OR DISCLOSED EXCEPT AS APPROVED BY KEMWORKS TECHNOLOGY, INC. AND AGRA MONENCO INC. UPON DEMAND BY EITHER PARTY, THIS DRAWING AND ALL COPIES HEREOF SHALL BE RETURNED IMMEDIATELY.

KEMWORKS TECHNOLOGY, INC.
2000 IMPERIAL PARKWAY, SUITE 100
MULBERRY, FLORIDA, USA
(863) 646-2000 FAX (863) 647-2319
www.kemworks.com

LAST UPDATE: 01/03/20 7:33am
CAD FILE NAME: G:\Y6000\CAD\PMP\PRC\AGRAP&ID\1006103.dwg

AGR-CBI_003865
SUBJECT TO ALL APPLICABLE CONFIDENTIAL BUSINESS INFORMATION PRIVILEGES

EXHIBIT B

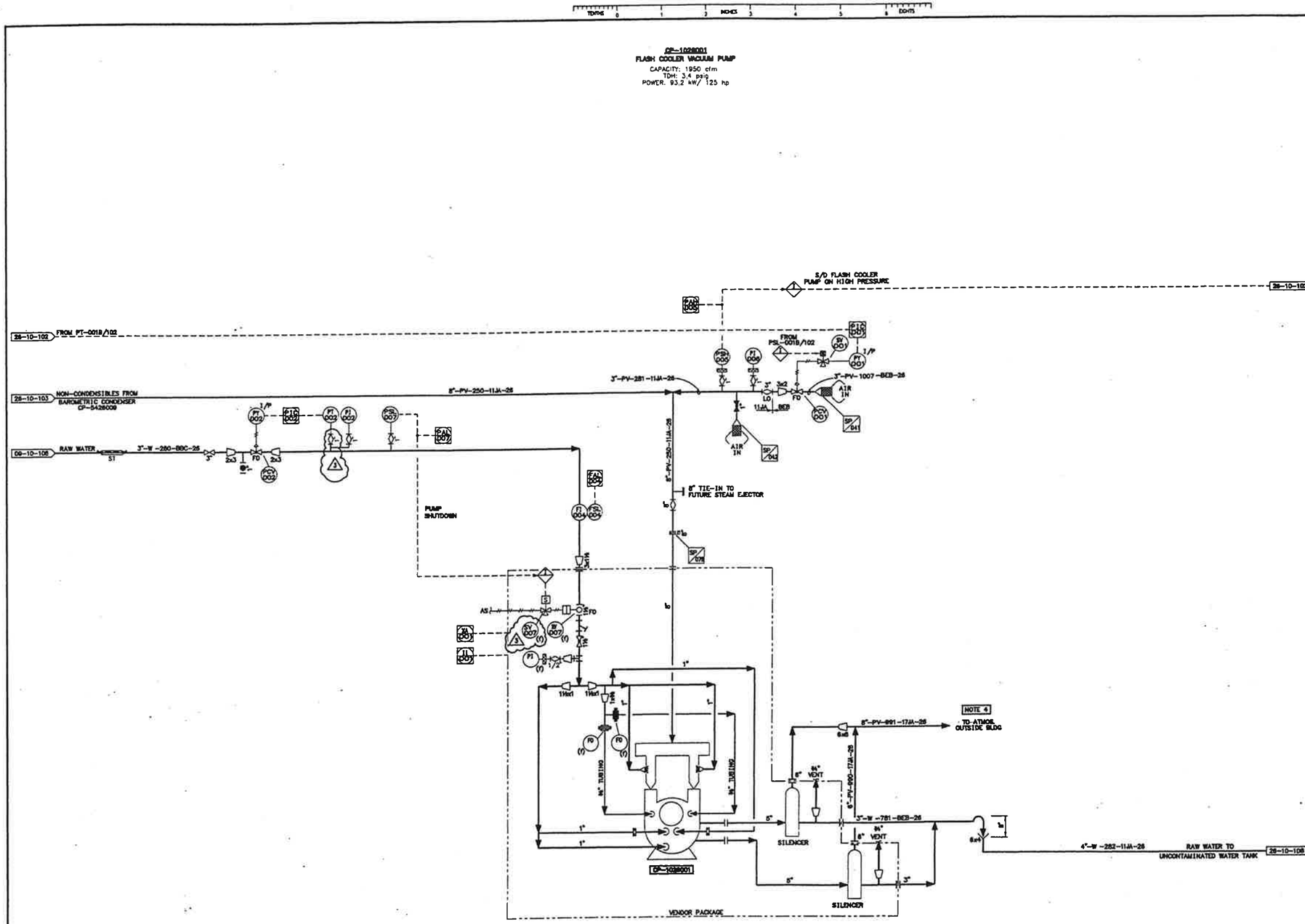

GENERAL NOTES

1. DELETED.
2. DELETED
3. KEMWORKS ISSUED REV. C WITH P.E. STAMP. EFFECTIVE MARCH 24th, 2000, THIS DRAWING IS BEING MAINTAINED BY AMI.
4. VENT TO SAFE LOCATION OUTSIDE BUILDING AWAY FROM AREAS THAT PERSONNEL ARE LIKELY TO USE.

HOLDS

EQUIPMENT ON THIS DRAWING

EQUIP. NO.	DESCRIPTION	STATUS
CP-1026001	FLASH COOLER VACUUM PUMP	NEW

ISSUED FOR CONSTRUCTION

DESTROY PREVIOUS PRINTS

AGRA Monenco CALGARY ISSUE FEB 23 2001

NU-WEST INDUSTRIES INC.
3010 CONDA ROAD SODA SPRINGS, ID 83276

REV.	REVISION DESCRIPTION	DATE	DRAWN BY	DESIGNED BY	DWG. CHECK	DESIGN CHECK	LEAD ENG./ DEPT. MGR.	P. ENG./ PROJ. MGR.	NO.	DWG. NO.	REFERENCE DRAWINGS
3	REVISED AS NOTED	01/02/23	TDV	RAJM	SSK				8		
2	REVISED AS NOTED	00/12/14	PRC	RAJM	SSK	RR	RR	LAF	7		
1	REVISED AS NOTED RE-ISSUED FOR CONSTRUCTION	00/11/17	PRC	RAJM	SSK	RR			6		
0	ISSUED FOR CONSTRUCTION	00/06/09	AB	RAJM	SSK	RR			5	26-10-108	PHOS ACID MGI FILTER #1 VACUUM PUMP
F	GENERAL REVISIONS	00/05/26	AB	RAJM	SSK	RR			4	26-10-103	PHOS ACID COOLER, PRECONDENSERS
E	UPDATED FOR HAZOP	00/04/20	AB	RAJM	SSK	RR			3	26-10-102	PHOS ACID REACTOR
D	ISSUED FOR TIE-IN REVIEW	00/03/27	AB	RAJM	RR				2	09-10-108	FRESHWATER
C	CHANGE PCV-001CLOSE FOR OPEN / ISSUED FOR DESIGN	00/02/17	RPL						1	09-10-100	SUMMARY PIPING SYMBOLS

ENGINEERING REVIEW		
P. ENG./ PROJ. MGR.	LAF	00/06/12
LEAD ENG./ DEPT. MGR.	RAJM	00/06/12
DESIGN CHECK	KEMWORKS	00/02/17
DWG. CHECK	MDW	99/12/13
DESIGNED BY	APH	99/12/11
DRAWN BY	JKC	99/12/13

THIS DRAWING, THE KNOW-HOW AND INFORMATION DISCLOSED HEREIN ARE THE PROPERTY OF KEMWORKS TECHNOLOGY, INC. AND AGRA MONENCO INC. THIS DRAWING MAY NOT BE USED, COPIED OR DISCLOSED EXCEPT AS APPROVED BY KEMWORKS TECHNOLOGY, INC. AND AGRA MONENCO INC. UPON DEMAND BY EITHER PARTY, THIS DRAWING AND ALL COPIES HEREOF SHALL BE RETURNED IMMEDIATELY.

KEMWORKS TECHNOLOGY, INC.
2000 IMPERIAL PARKWAY, SUITE 100
MULI BERRY, FLORIDA USA
(863) 646-0200 FAX (863) 647-4210
www.kemworks.com

CLIENT APPROVAL BY: CRH DATE: 00/05/31

AGRA MONENCO DWG. NO.: Y600D-100-6-104
PROJECT NO.: Y600D
SCALE: NONE

AGRA Monenco
ENGINEERING GLOBAL SOLUTIONS

CPO EXPANSION PROJECT
PHOS ACID FLASH COOLER
VACUUM PUMP #1 P&ID

DRAWING NO. 26-10-104
REV. 3

CAD FILE NAME: G:\Y600D\CAD\PIP\PRC\AGRAP&ID\1006104.dwg
LAST UPDATE: 01/03/21 7:18am

EXHIBIT B

AGR-CBI_003866
SUBJECT TO ALL APPLICABLE CONFIDENTIAL BUSINESS INFORMATION PRIVILEGES

CP-1028002
FLASH COOLER VACUUM PUMP
CAPACITY: 1950 cfm
TDH: 3.4 psig
POWER: 93.2 kW / 125 hp

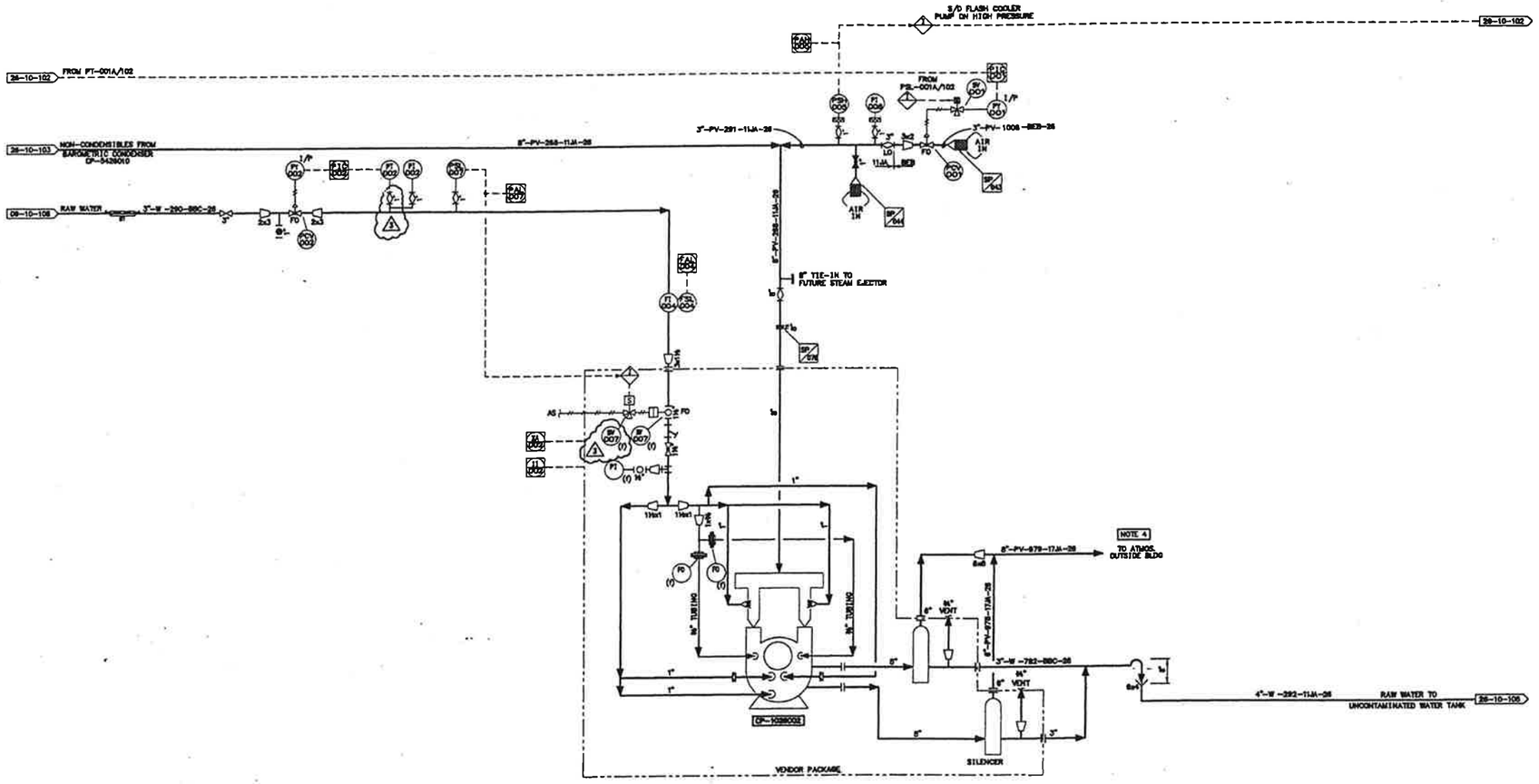

GENERAL NOTES

1. DELETED.
2. DELETED.
3. KEMWORKS ISSUED REV. C WITH P.E. STAMP. EFFECTIVE MARCH 24th, 2000, THIS DRAWING IS BEING MAINTAINED BY AML.
4. VENT TO SAFE LOCATION OUTSIDE BUILDING AWAY FROM AREAS THAT PERSONNEL ARE LIKELY TO USE.

HOLDS

EQUIPMENT ON THIS DRAWING

EQUIP. NO.	DESCRIPTION	STATUS
CP-1028002	FLASH COOLER VACUUM PUMP	NEW

ISSUED FOR CONSTRUCTION

DESTROY PREVIOUS PRINTS

AGRA Monenco CALGARY ISSUE FEB 23 2001

REV.	REVISION DESCRIPTION	DATE	DRAWN BY	DESIGNED BY	ENG. CHECK	DESIGN CHECK	LEAD DIC./ DEPT. MGR.	P. DIC./ PROJ. MGR.
1	REVISED AS NOTED	01/02/23	TDV	RAJM	SSK			
2	REVISED AS NOTED	00/12/14	PRC	RAJM	SSK	RR	RR	LAF
1	REVISED AS NOTED RE-ISSUED FOR CONSTRUCTION	00/11/17	PRC	RAJM	SSK	RR		
0	ISSUED FOR CONSTRUCTION	00/06/09	AB	RAJM	SSK	RR		
E	GENERAL REVISIONS	00/05/26	AB	RAJM	SSK	RR		
D	ISSUED FOR TIE-IN REVIEW	00/03/28	AB	RAJM	RR			
C	CHANGE PCV-001 CLOSE TO OPEN / ISSUED FOR DESIGN	00/02/17	RPL					
B	FOR DETAIL DESIGN	00/01/27						

NO.	DWG. NO.	REFERENCE DRAWINGS
8		
7		
6		
5	26-10-106	PHOS ACID BELT FILTER /1 VACUUM PUMP
4	26-10-103	PHOS ACID COOLER/ PRECONDENSERS
3	26-10-102	PHOS ACID REACTOR
2	09-10-108	FRESHWATER
1	09-10-100	STANDARD P&ID SYMBOLS

ENGINEERING REVIEW		
P. DIC./ PROJ. MGR.	LAF	00/06/12
LEAD DIC./ DEPT. MGR.	RAJM	00/06/12
DESIGN CHECK	KEMWORKS	00/02/17
DWG. CHECK	MDW	99/12/13
DESIGNED BY	APM	99/12/11
DRAWN BY	JKC	99/12/13

THIS DRAWING, THE KNOW-HOW AND INFORMATION DISCLOSED HEREIN ARE THE PROPERTY OF KEMWORKS TECHNOLOGY, INC. AND AGRA MONENCO INC. THIS DRAWING MAY NOT BE USED, COPIED OR DISCLOSED EXCEPT AS APPROVED BY KEMWORKS TECHNLOGY, INC. AND AGRA MONENCO INC. UPON DEMAND BY EITHER PARTY, THIS DRAWING AND ALL COPIES HEREOF SHALL BE RETURNED IMMEDIATELY.

KEMWorks TECHNOLOGY, INC.
8888 SUNSHINE PARKWAY, SUITE 120
MAIN BRANCH, FLORIDA USA
(941) 649-5295 FAX (941) 647-8210
www.kemworks.com

CLIENT APPROVAL BY DATE CRH 00/05/31

AGRA MONENCO DWG. NO. Y600D-100-6-105
PROJECT NO. Y600D
SCALE NONE

NU-WEST INDUSTRIES INC.
3010 CONDA ROAD 500A SPRINGS, ID 83276

AGRA Monenco
ENGINEERING GLOBAL SOLUTIONS

CPO EXPANSION PROJECT
PHOS ACID FLASH COOLER
VACUUM PUMP #2 P&ID

DRAWING NO. 26-10-105 REV. 3

CAD FILE NAME: G:\Y6000\CAD\PIP\PRC\AGRAP&ID\10061105.dwg
LAST UPDATE: 01/03/21 7:19am

EXHIBIT B

AGR-CBI_003867
SUBJECT TO ALL APPLICABLE CONFIDENTIAL BUSINESS INFORMATION PRIVILEGES

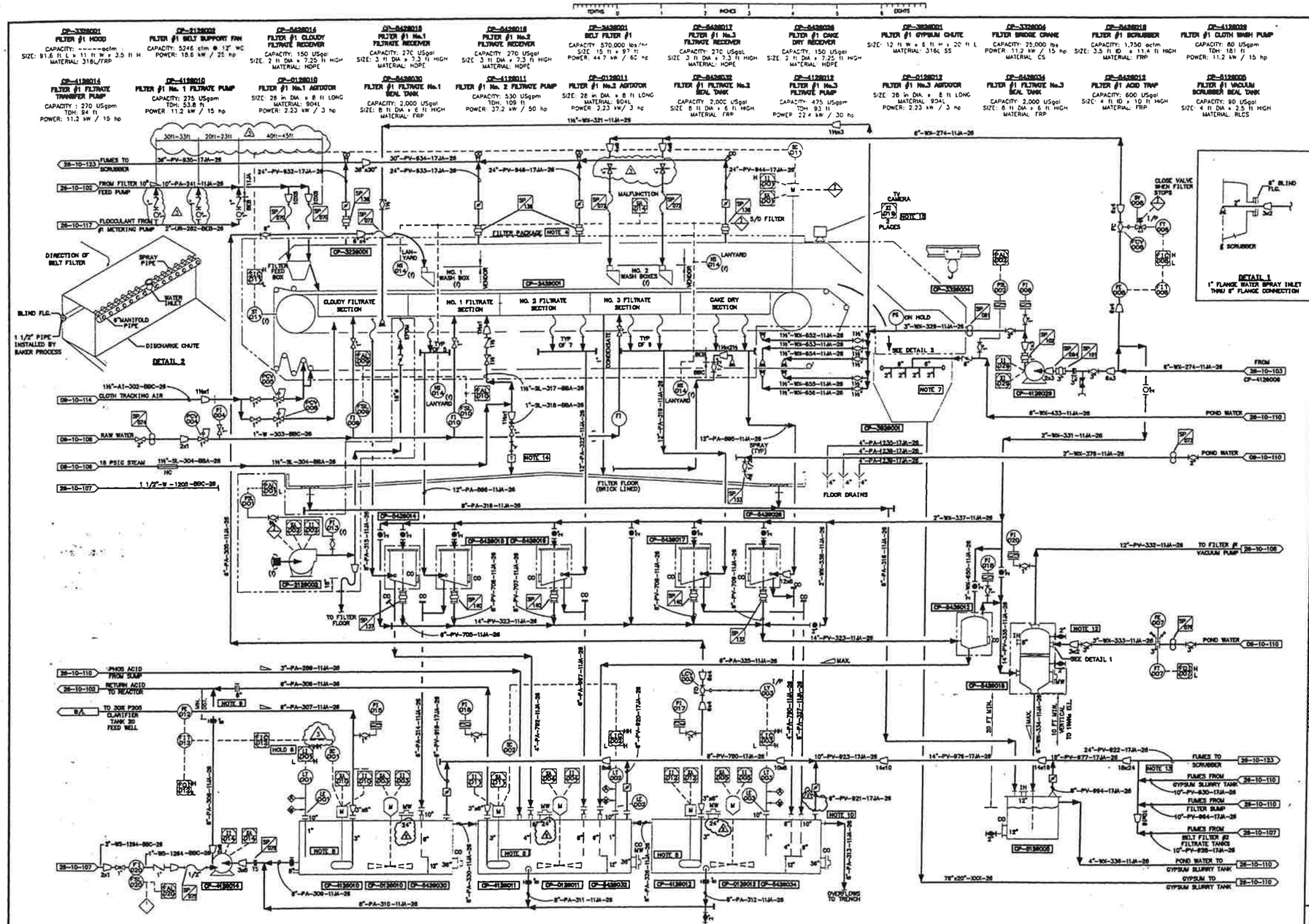

GENERAL NOTES

1. DELETED.
2. DELETED
3. DELETED.
4. DELETED
5. DELETED
6. KEMWORKS ISSUED REV. C WITH P.E. STAMP. EFFECTIVE MARCH 24th, 2000, THIS DRAWING IS BEING MAINTAINED BY AMI.
7. GYPSUM CHUTE SPRAY PIPES TO BE SLOPED INWARDS.
8. CP-4126010/11/12 SUCTION SHOULD BE MIN. 6" ABOVE BOTTOM OF SEAL LEGS TO PREVENT LOSS OF VACUUM. ALSO, PUMP SUCTION SHOULD BE MIN. 18" FROM FLOOR OF SEAL TANKS.
9. LOCATE VALVES CLOSE TO EACH OTHER WITH VALVE IN PUMP CP-4126014 DISCHARGE LINE MIN. DISTANCE FROM TEE SO THAT LINE DOES NOT PLUG UP WITH SOLIDS.
10. LOCATE ABOVE OVERFLOWS TO TANK CP-5428032.
11. DELETED.
12. VENDOR TO PROVIDE ONE NOZZLE ABOVE AND ONE BELOW DEMISTER TO BE USED AS PRESSURE TAPS.
13. LATERAL CONNECTIONS SHALL BE USED ON DUCTING WHEREVER POSSIBLE. (IN DIRECTION OF FLOW).
14. INSTALL TRAP IN LOW POINT IN LINE TO AVOID WATER HAMMER.
15. LOCATE ONE CAMERA WHERE THE WEAK ACID IS DISTRIBUTED ON THE FILTER FOR THE FIRST WASH AND THE SECOND CAMERA WHERE THE POND WATER IS DISTRIBUTED ON THE FILTER FOR THE FIRST POND WATER WASH. CAMERAS SHOULD BE SO LOCATED AS TO BE ABLE TO SEE THE WASH SOLUTION WHERE IT IS ADDED TO THE FILTER AS WELL AS THE AREA DOWNSTREAM.
16. FIELD TO BE DETERMINE TAP-IN FOR THE FLOC. INJECTION AS PER DISTANCES SHOWN.

EQUIPMENT ON THIS DRAWING

EQUIP. NO.	DESCRIPTION	STATUS
CP-0126010	FILTER #1 NO. 1 AGITATOR	NEW
CP-0126011	FILTER #1 NO. 2 AGITATOR	NEW
CP-0126012	FILTER #1 NO. 3 AGITATOR	NEW
CP-2126002	FILTER #1 BELT SUPPORT FAN	* NEW
CP-2428001	BELT FILTER #1	* NEW
CP-3228001	FILTER #1 HOOD	* NEW
CP-3328004	FILTER BRIDGE CRANE	NEW
CP-3828001	FILTER #1 GYPSUM CHUTE	NEW
CP-4126010	FILTER #1 NO. 1 FILTRATE PUMP	NEW
CP-4126011	FILTER #1 NO. 2 FILTRATE PUMP	NEW
CP-4126012	FILTER #1 NO. 3 FILTRATE PUMP	NEW
CP-4126014	FILTER #1 FILTRATE TRANSFER PUMP	NEW
CP-4126029	FILTER #1 CLOTH WASH PUMP	NEW
CP-5126005	FILTER #1 VACUUM SCRUBBER SEAL TANK	NEW
CP-5428012	FILTER #1 ACID TRAP	* NEW
CP-5428014	FILTER #1 CLOUDY FILTRATE RECEIVER	* NEW
CP-5428015	FILTER #1 NO. 1 FILTRATE RECEIVER	* NEW
CP-5428016	FILTER #1 NO. 2 FILTRATE RECEIVER	* NEW
CP-5428017	FILTER #1 NO.3 FILTRATE RECEIVER	* NEW
CP-5428018	FILTER #1 SCRUBBER	* NEW
CP-5428028	FILTER #1 CAKE DRY RECEIVER	* NEW
CP-5428030	FILTER #1 FILTRATE NO. 1 SEAL TANK	NEW
CP-5428032	FILTER #1 FILTRATE NO. 2 SEAL TANK	NEW
CP-5428034	FILTER #1 FILTRATE NO. 3 SEAL TANK	NEW

* - BELT FILTER PKG.

ISSUED FOR CONSTRUCTION

DESTROY PREVIOUS PRINTS

AGRA Monenco
CALGARY
ISSUE
MAY 14 2001

NU-WEST INDUSTRIES INC.
3010 CONDA ROAD SODA SPRINGS, ID 83276

AGRA Monenco
ENGINEERING GLOBAL SOLUTIONS

CPO EXPANSION PROJECT
PHOS ACID BELT FILTER #1
P&ID

CAD FILE NAME: G:\Y6000\CAD\PIP\PROC\AGRAPAID\7036101.dwg

LAST UPDATE: 01/04/2 7:30am

REV.	REVISION DESCRIPTION	DATE	DRAWN BY	DESIGNED BY	DWG. CHECK	DESIGN CHECK	LEAD ENG./ INT. MGR.	P. ENG./ PROJ. MGR.	NO.	DWG. NO.	
3	REVISED AS NOTED	01/05/14	LH	RAJM	SSK	RR			8	26-10-123	PHASE 2 VENTILATION DUCTING SHT.2
2	REVISED AS NOTED	01/02/28	TDV	RAJM	SSK				7	16-10-117	FILTER FLOCCULANT SKID HOLD 3
1	REVISED AS NOTED RE-ISSUED FOR CONSTRUCTION	00/11/03	PRC	RAJM	SSK	RR		LAF	6	26-10-110	PHOS ACID GYPSUM SLURRY TANK
C	ISSUED FOR CONSTRUCTION	00/06/15	AB	RAJM	SSK	RR			5	26-10-106	PHOS ACID BELT FILTER #1 VACUUM PUMP
F	GENERAL REVISIONS	00/05/31	AB	RAJM	SSK	RR			4	26-10-107	PHOS ACID BELT FILTER #2
E	VENDOR PACKAGE EQUIPMENT IDENTIFIED	00/03/20	AB	RAJM	SSK	RR			2	26-01-103	PHOS ACID FLASH COOLERS PRECONDENSERS
D	UPDATED FOR HAZOP / GENERAL REVISIONS AS SHOWN	00/03/28	AB	RAJM	RR				3	26-10-102	PHOS ACID REACTOR
C	ISSUED FOR DESIGN	00/02/17	RPL						1	09-10-100	STANDARD P&ID SYMBOLS

P. ENG./ PROJ. MGR.	LAF	00/11/09
LEAD ENG./ INT. MGR.	RR	00/11/03
DESIGN CHECK	KEMWORKS	00/02/17
DWG. CHECK	MDW	00/01/05
DESIGNED BY	SMN	00/01/03
DRAWN BY	JKC	00/01/05

THIS DRAWING, THE KNOW-HOW AND INFORMATION DISCLOSED HEREIN ARE THE PROPERTY OF KEMWORKS TECHNOLOGY, INC. AND AGRA MONENCO INC. THIS DRAWING MAY NOT BE USED, COPIED OR DISCLOSED EXCEPT AS APPROVED BY KEMWORKS TECHNOLOGY, INC. AND AGRA MONENCO INC. UPON DEMAND BY EITHER PARTY, THIS DRAWING AND ALL COPIES HEREOF SHALL BE RETURNED IMMEDIATELY.

KEMWorks TECHNOLOGY, INC.
2650 IMPERIAL PARKWAY, SUITE 145
MAL BERRY, FLORIDA, USA
(863) 646-6369 FAX (863) 647-8818
www.kemworks.com

CLIENT APPROVAL BY DATE

AGRA MONENCO ENG. NO. Y600D-703-6-101

EXHIBIT B

AGR-CBI_003868
SUBJECT TO ALL APPLICABLE CONFIDENTIAL BUSINESS INFORMATION PRIVILEGES

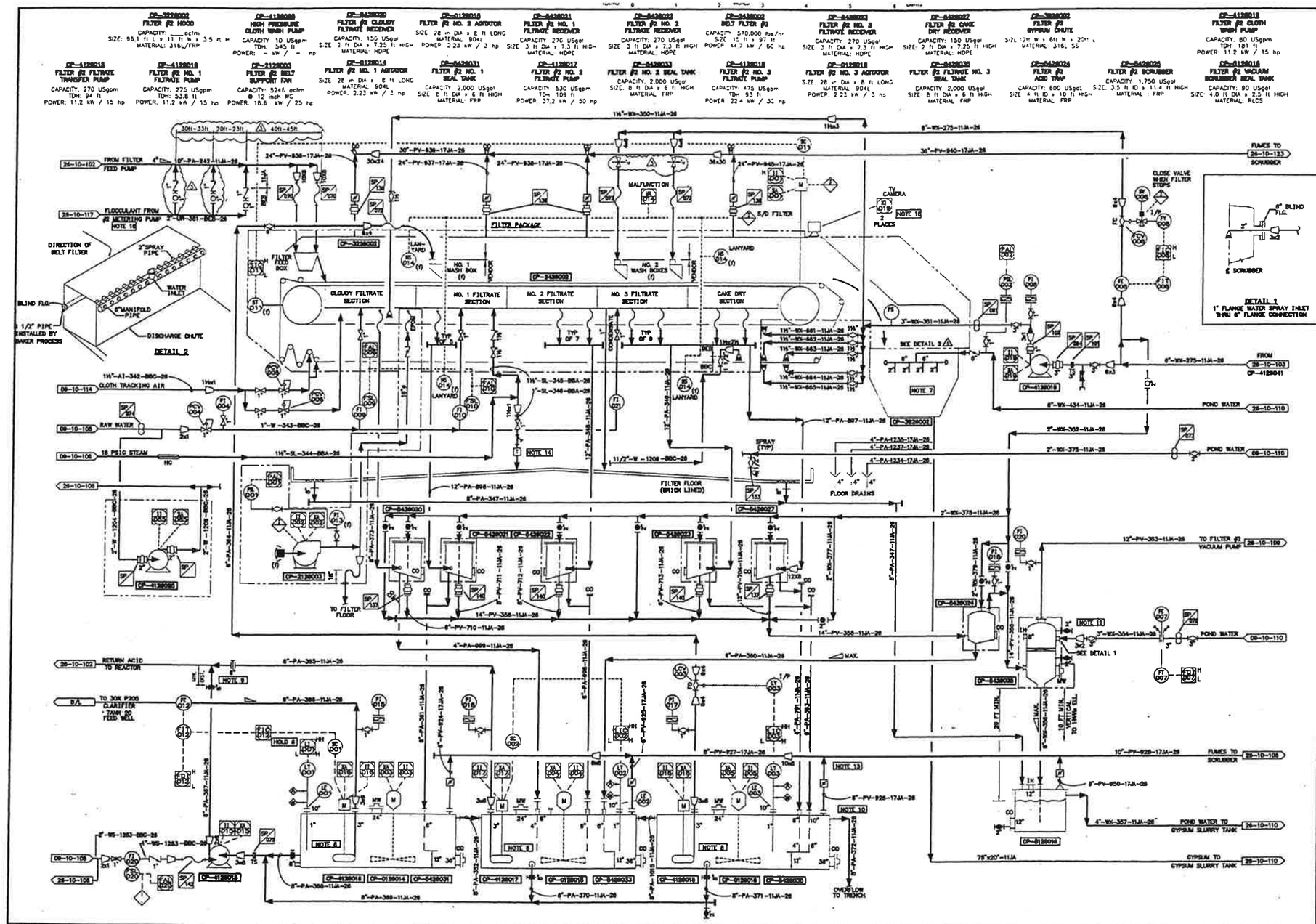

GENERAL NOTES

1. DELETED.
2. DELETED.
3. DELETED
4. DELETED
5. DELETED
6. KEMWORKS ISSUED REV. C WITH P.E. STAMP. EFFECTIVE MARCH 24th, 2000, THIS DRAWING IS BEING MAINTAINED BY AMI.
7. GYPSUM CHUTE SPRAY PIPES TO BE SLOPED INWARDS.
8. CP-4128016/17/18 SUCTION SHOULD BE MIN. 6" ABOVE BOTTOM OF SEAL LEGS TO PREVENT LOSS OF VACUUM. ALSO, PUMP SUCTION SHOULD BE MIN. 18" FROM FLOOR OF SEAL TANKS.
9. LOCATE VALVES CLOSE TO EACH OTHER WITH VALVE IN PUMP CP-4128015 DISCHARGE LINE MIN. DISTANCE FROM TEE SO THAT LINE DOES NOT PLUG UP WITH SOLIDS.
10. LOCATE ABOVE OVERFLOWS TO TANK CP-5428033.
11. DELETED.
12. VENDOR TO PROVIDE ONE NOZZLE ABOVE AND ONE BELOW DEMISTER TO BE USED AS PRESSURE TAPS.
13. LATERAL CONNECTIONS SHALL BE USED ON DUCTING WHEREVER POSSIBLE. (IN DIRECTION OF FLOW).
14. INSTALL TRAP IN LOW POINT IN LINE TO AVOID WATER HAMMER.
15. LOCATE ONE CAMERA WHERE THE WEAK ACID IS DISTRIBUTED ON THE FILTER FOR THE FIRST WASH AND THE SECOND CAMERA WHERE THE POND WATER IS DISTRIBUTED ON THE FILTER FOR THE FIRST POND WATER WASH. CAMERAS SHOULD BE SO LOCATED AS TO BE ABLE TO SEE THE WASH SOLUTION WHERE IT IS ADDED TO THE FILTER AS WELL AS THE AREA DOWNSTREAM.
16. FIELD TO DETERMINE TAP-IN LOCATIONS FOR THE FLOC. INJECTION AS PER DISTANCE SHOWN.

EQUIPMENT ON THIS DRAWING

EQUIP. NO.	DESCRIPTION	STATUS
CP-0128014	FILTER #2 NO. 1 AGITATOR	NEW
CP-0128015	FILTER #2 NO. 2 AGITATOR	NEW
CP-0128016	FILTER #2 NO. 3 AGITATOR	NEW
CP-0128003	FILTER #2 BELT SUPPORT FAN	* NEW
CP-2428002	BELT FILTER #2	* NEW
CP-3228002	FILTER #2 HOOD	* NEW
CP-3228006	FILTER #2 SPROCK-CRANE-DELETED	NEW
CP-3828002	FILTER #2 GYPSUM CHUTE	NEW
CP-4128015	FILTER #2 FILTRATE TRANSFER PUMP	NEW
CP-4128016	FILTER #2 NO. 1 FILTRATE PUMP	NEW
CP-4128017	FILTER #2 NO. 2 FILTRATE PUMP	NEW
CP-4128018	FILTER #2 NO. 3 FILTRATE PUMP	NEW
CP-4128019	FILTER #2 CLOTH WASH PUMP	NEW
CP-5128018	FILTER #2 VACUUM SCRUBBER SEAL TANK	NEW
CP-5428020	FILTER #2 CLOUDY FILTRATE RECEIVER	* NEW
CP-5428021	FILTER #2 NO. 1 FILTRATE RECEIVER	* NEW
CP-5428022	FILTER #2 NO. 2 FILTRATE RECEIVER	* NEW
CP-5428023	FILTER #2 NO.3 FILTRATE RECEIVER	* NEW
CP-5428024	FILTER #2 ACID TRAP	* NEW
CP-5428025	FILTER #2 SCRUBBER	* NEW
CP-5428027	FILTER #2 CAKE DRY RECEIVER	* NEW
CP-5428031	FILTER #2 FILTRATE NO. 1 SEAL TANK	NEW
CP-5428033	FILTER #2 FILTRATE NO. 2 SEAL TANK	NEW
CP-5428035	FILTER #2 FILTRATE NO. 3 SEAL TANK	NEW
CP-4128085	HIGH PRESSURE CLOTH WASH PUMP	NEW

* - BELT FILTER PKG.

ISSUED FOR CONSTRUCTION

DESTROY PREVIOUS PRINTS

AGRA Monenco
CALGARY
ISSUE
MAY 14 2001

REV.	REVISION DESCRIPTION	DATE	DRAWN BY	DESIGNED BY	DWG. CHECK	DESIGN CHECK	LEAD ENG./DEPT. MGR.	P. ENG./PROJ. MGR.
3	REVISED AS NOTED	01/05/14	LH	RAJM	SSK	RR		
2	REVISED AS NOTED	01/02/27	TDV	SSK				
1	REVISED AS NOTED RE-ISSUED FOR CONSTRUCTION	00/11/03	AB	RAJM	SSK	RR	RR	LAF
0	ISSUED FOR CONSTRUCTION	00/06/15	AB	RAJM	SSK	RR		
E	VENDOR PACKGE EQUIPMENT IDENTIFIED & GENERAL REVISIONS	00/05/31	AB	RAJM	SSK	RR		
D	ISSUED FOR TIE-IN REVIEW	00/03/28	AB	RAJM	RR			
C	ISSUED FOR DESIGN	00/02/17	RPL					
B	FOR DETAIL DESIGN	00/01/28						

NO.	DWG. NO.	REFERENCE DRAWINGS
8	26-10-123	PHASE 2 VENTILATION DUCTING SHT.3
7	26-10-117	FILTER FLOCCULANT SKID
6	26-10-112	PH25 ACID SCRUBBER
5	26-10-110	PH25 ACID GYPSUM SLURRY TANK
4	26-10-109	PH25 ACID BELT FILTER #2 VACUUM PUMP
3	26-01-103	PH25 ACID FLASH COOLERS PRECONDENSERS
2	26-10-02	PH25 ACID REACTOR
1	09-01-100	STANDARD P&ID SYMBOLS

ENGINEERING REVIEW

F. ENG./PROJ. MGR.		
LEAD ENG./DEPT. MGR.		
DESIGN CHECK	KEMWORKS	00/02/17
DWG. CHECK	MDW	00/01/05
DESIGNED BY	SAN	00/01/03
DRAWN BY	JKC	00/01/04

THIS DRAWING, THE KNOW-HOW AND INFORMATION DISCLOSED HEREIN ARE THE PROPERTY OF KEMWORKS TECHNOLOGY, INC. AND AGRA MONENCO INC. THIS DRAWING MAY NOT BE USED, COPIED OR DISCLOSED EXCEPT AS APPROVED BY KEMWORKS TECHNOLOGY, INC. AND AGRA MONENCO INC. UPON DEMAND BY EITHER PARTY, THIS DRAWING AND ALL COPIES HEREOF SHALL BE RETURNED IMMEDIATELY.

KEMWorks TECHNOLOGY, INC.
8888 Imperial Parkway, Suite 140
Bellevue, Florida, USA
(863) 648-2369 FAX (863) 647-2218
www.kemworks.com

CLIENT APPROVAL BY	DATE	AGRA MONENCO DWG. NO.	
CRH	00/05/31	Y600D-703-6-102	
		PROJECT NO. Y600D	SCALE NONE

NU-WEST INDUSTRIES INC.
3010 CONDA ROAD SODA SPRINGS, ID 83276

AGRA Monenco
ENGINEERING GLOBAL SOLUTIONS

CPO EXPANSION PROJECT
PHOS ACID BELT FILTER #2
P&ID

DRAWING NO. 26-10-107 REV. 3

EXHIBIT B

AGR-CBI_003869
SUBJECT TO ALL APPLICABLE CONFIDENTIAL BUSINESS INFORMATION PRIVILEGES

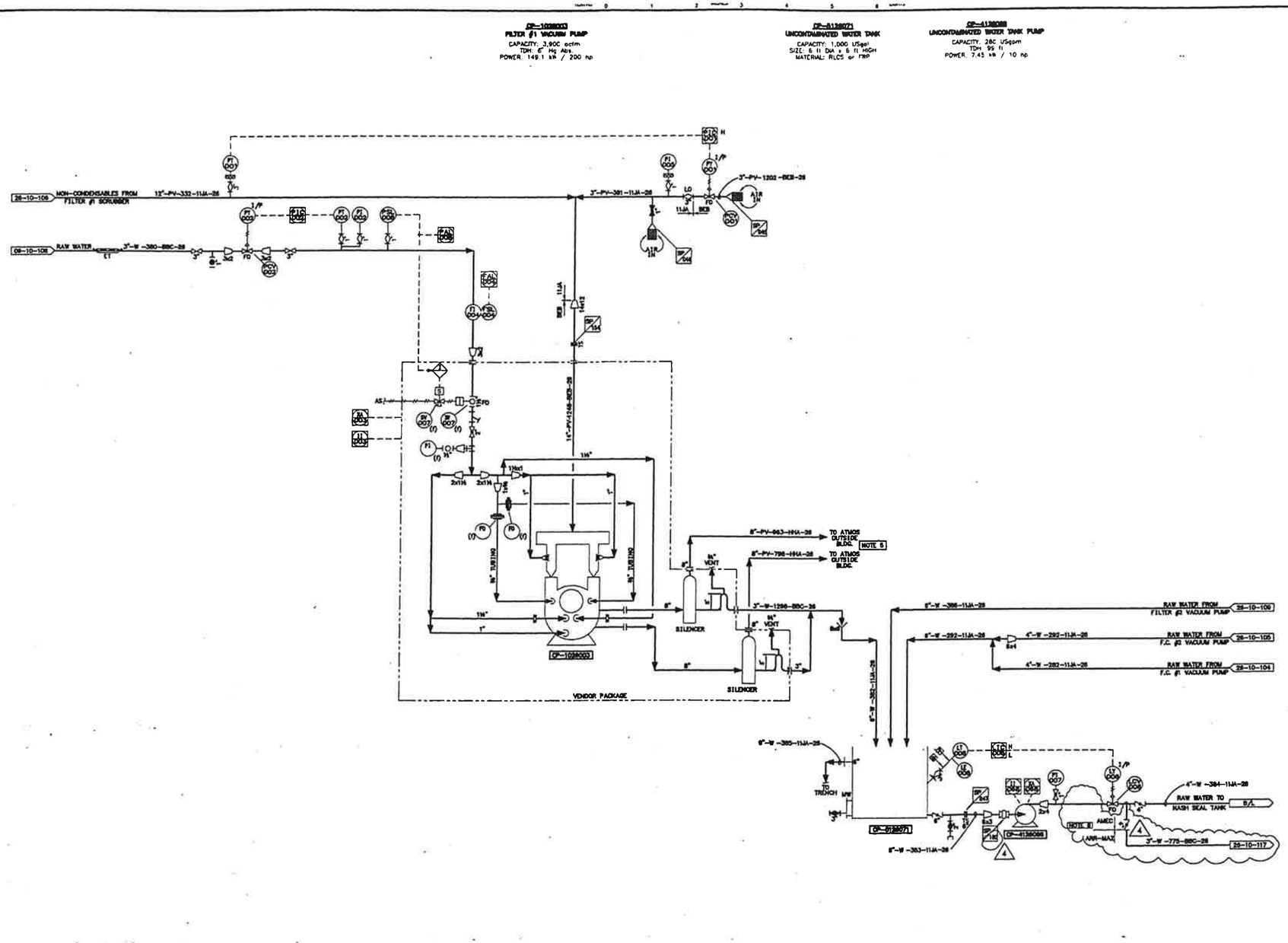

GENERAL NOTES

1. DELETED
2. DELETED.
3. DELETED. DETERMINED DURING DETAIL ENGINEERING.
4. KEMWORKS ISSUED REV. C WITH P.E. STAMP. EFFECTIVE MARCH 24th, 2000, THIS DRAWING IS BEING MAINTAINED BY AMI.
5. VENT TO SAFE LOCATION OUTSIDE BUILDING AWAY FROM AREAS THAT PERSONNEL ARE LIKELY TO USE.
6. ARR-MAZ TO INSTALL PIPING TO EXISTING UNCONTAMINATED WATER SYSTEM.

EQUIPMENT ON THIS DRAWING

EQUIP. NO.	DESCRIPTION	STATUS
CP-1028003	FILTER #1 VACUUM PUMP	NEW
CP-4126068	UNCONTAMINATED WATER TANK PUMP	NEW
CP-5126071	UNCONTAMINATED WATER TANK	NEW

ISSUED FOR CONSTRUCTION

DESTROY PREVIOUS PRINTS

AGRA Monenco
CALGARY
ISSUE
MAY 14 2001

REV.	REVISION DESCRIPTION	DATE	DRAWN BY	DESIGNED BY	DWG. CHECK	DESIGN CHECK	LEAD ENG./DEPT. MGR.	P. ENG./PROJ. MGR.	NO.	DWG. NO.	REFERENCE DRAWINGS
3	REVISED AS NOTED	01/02/26	TDV	RAJM	SSK				8		
2	REVISED AS NOTED	00/12/14	PRC	RAJM	SSK	RR	RR	LAF	7		
1	REVISED AS NOTED RE-ISSUED FOR CONSTRUCTION	00/11/13	PRC	RAJM	SSK	RR			6	26-10-108	PHOS ACID BELT FILTER #2 VACUUM PUMP
0	ISSUED FOR CONSTRUCTION	00/06/09	AB	RAJM	SSK	RR			5	26-10-108	PHOS ACID BELT FILTER #1
F	REVISED AS NOTED	00/05/22	AB	RAJM	SSK	RR			4	26-10-102	PHOS ACID FLASH COOLER VACUUM PUMP #2
E	UPDATED FOR HAZOP	00/04/20	AB	RAJM	SSK	RR			3	26-10-101	PHOS ACID FLASH COOLER VACUUM PUMP #1
D	ISSUED FOR TIE-IN REVIEW	00/03/28	AB	RAJM	RR				2	08-10-101	FRESHWATER
C	ISSUED FOR DESIGN	00/02/17	RPL						1	08-10-100	STANDARD PIPE SYMBOLS

ENGINEERING REVIEW

P. ENG./PROJ. MGR.	LAF	00/06/12
LEAD ENG./DEPT. MGR.	RAM	00/06/12
DESIGN CHECK	KEMWORKS	00/02/17
DWG. CHECK	MDW	00/01/05
DESIGNED BY	SMN	00/01/03
DRAWN BY	JKC	00/01/04

THIS DRAWING, THE KNOW-HOW AND INFORMATION DISCLOSED HEREIN ARE THE PROPERTY OF KEMWORKS TECHNOLOGY, INC. AND AGRA MONENCO INC. THIS DRAWING MAY NOT BE USED, COPIED OR DISCLOSED EXCEPT AS APPROVED BY KEMWORKS TECHNOLOGY, INC. AND AGRA MONENCO INC. UPON DEMAND BY EITHER PARTY, THIS DRAWING AND ALL COPIES HEREOF SHALL BE RETURNED IMMEDIATELY.

KEMWORKS TECHNOLOGY, INC.
6800 INTERNAL PARKWAY, SUITE 100
HOLLYWOOD, FLORIDA USA
(954) 646-5300 FAX (954) 647-6210
www.kemworks.com

CLIENT APPROVAL: BY CRN DATE 00/05/31

AGRA MONENCO DWG. NO.: Y600D-703-6-103
PROJECT NO.: Y600D
SCALE: NONE

NU-WEST INDUSTRIES INC.
3010 CONDA ROAD SODA SPRINGS, ID 83276

AGRA Monenco
ENGINEERING GLOBAL SOLUTIONS

CPO EXPANSION PROJECT
PHOS ACID BELT FILTER #1
VACUUM PUMP P&ID

DRAWING NO. 26-10-108 REV. 4

EXHIBIT B

AGR-CBI_003870
SUBJECT TO ALL APPLICABLE CONFIDENTIAL BUSINESS INFORMATION PRIVILEGES

CP-1026004
FILTER #2 VACUUM PUMP
CAPACITY: 3,900 acfm
TDH: 6" Hg Abs.
POWER: 141.9 kW / 200 hp

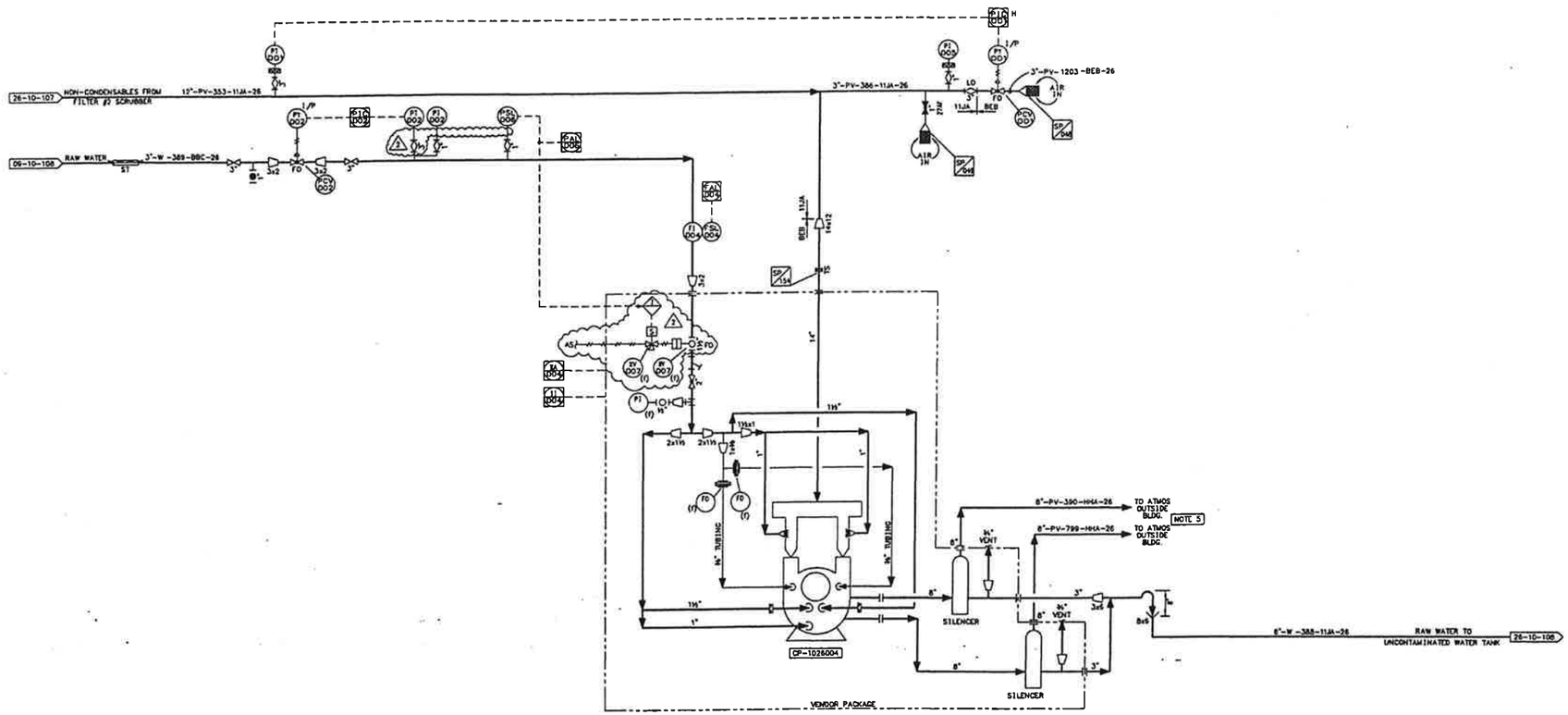

GENERAL NOTES

1. DELETED.
2. DELETED
3. DELETED
4. KEMWORKS ISSUED REV. C WITH P.E. STAMP. EFECTIVE MARCH 24th, 2000, THIS DRAWING IS BEING MAINTAINED BY AMI.
5. VENT TO SAFE LOCATION OUTSIDE BUILDING AWAY FROM AREAS THAT PERSONNEL ARE LIKELY TO USE.

HOLDS

EQUIPMENT ON THIS DRAWING

EQUIP. NO.	DESCRIPTION	STATUS
CP-1026004	FILTER #2 VACUUM PUMP	NEW

ISSUED FOR CONSTRUCTION

DESTROY PREVIOUS PRINTS

AGRA Monenco CALGARY - ISSUE DEC 14 2000

NU-WEST INDUSTRIES INC.
3010 CONDA ROAD SODA SPRINGS, ID 83276

AGRA Monenco
ENGINEERING GLOBAL SOLUTIONS

CPO EXPANSION PROJECT
PHOS ACID BELT FILTER #2
VACUUM PUMP P&ID

REV.	REVISION DESCRIPTION	DATE	DRAWN BY	DESIGNED BY	DWG. CHECK	DESIGN CHECK	LEAD ENG./ DEPT. MGR.	P. ENG./ PROJ. MGR.
2	REVISED AS NOTED	00/12/13	PRC	RAJM	SSK	RR		
1	REVISED AS NOTED RE-ISSUED FOR CONSTRUCTION	00/11/17	PRC	RAJM	SSK	RR		
0	ISSUED FOR CONSTRUCTION	00/06/09	AB	RAJM	SSK	RR		
F	REVISED AS NOTED	00/05/29	AB	RAJM	SSK	RR		
E	REVISED TO VENDOR PACKAGE	00/05/04	AB	RAJM	SSK	RR		
D	ISSUED FOR TIE-IN REVIEW	00/03/28	AB	RAJM	RR			
C	ISSUED FOR DESIGN	00/02/17	RPL					
B	FOR DETAIL DESIGN	00/01/28						

NO.	DWG. NO.	REFERENCE DRAWINGS
8		
7		
6		
5		
4	26-10-108	PHOS ACID BELT FILTER #1 VACUUM PUMP
3	26-10-107	PHOS ACID BELT FILTER #2
2	09-10-108	FRESHWATER
1	09-10-109	STANDARD P&ID SYMBOLS

ENGINEERING REVIEW		
P. ENG./ PROJ. MGR.	LAF	00/06/12
LEAD ENG./ DEPT. MGR.	RAJM	00/06/12
DESIGN CHECK	KEMWORKS	00/02/17
DWG. CHECK	MDW	00/01/05
DESIGNED BY	SMH	00/01/03
DRAWN BY	JKC	00/01/04

THIS DRAWING, THE KNOW-HOW AND INFORMATION DISCLOSED HEREIN ARE THE PROPERTY OF KEMWORKS TECHNOLOGY, INC. AND AGRA MONENCO INC. THIS DRAWING MAY NOT BE USED, COPIED OR DISCLOSED EXCEPT AS APPROVED BY KEMWORKS TECHNOLOGY, INC. AND AGRA MONENCO INC. UPON DEMAND BY EITHER PARTY, THIS DRAWING AND ALL COPIES HEREOF SHALL BE RETURNED IMMEDIATELY.

KEMWORKS TECHNOLOGY, INC.
8838 IMPERIAL PARKWAY, SUITE 106
MULBERRY, FLORIDA USA
(863) 648-5300 FAX (863) 647-8219
www.kemworks.com

CLIENT APPROVAL BY: CRH DATE: 00/05/31
AGRA MONENCO DWG. NO.: Y600D-703-6-104
PROJECT NO.: Y600D
SCALE: NONE
DRAWING NO.: 26-10-109
REV.: 2

CAD FILE NAME: 7036104
LAST UPDATE: 00/12/13

AGR-CBI_003871
SUBJECT TO ALL APPLICABLE CONFIDENTIAL BUSINESS INFORMATION PRIVILEGES

EXHIBIT B

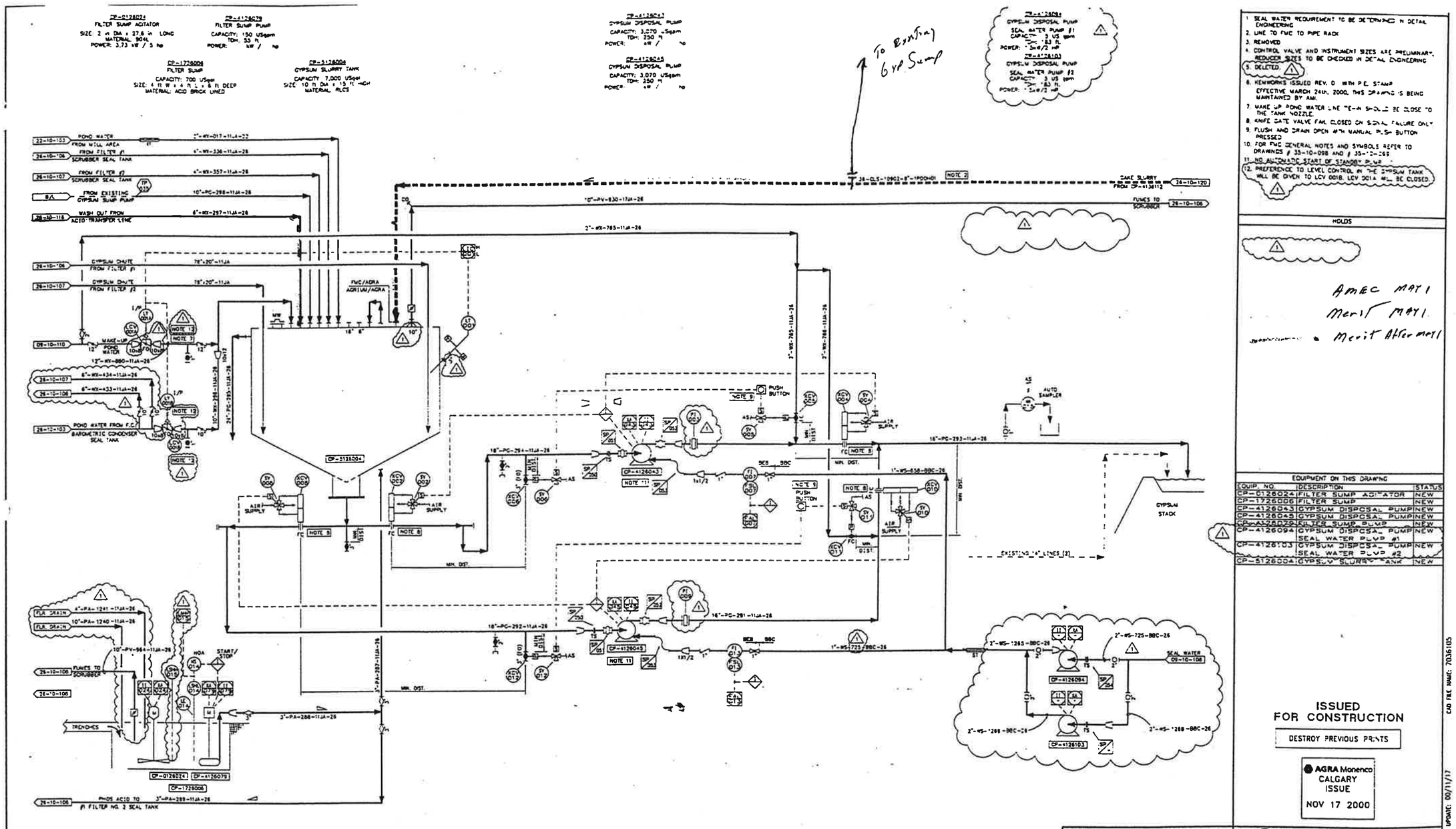

1. SEAL WATER REQUIREMENT TO BE DETERMINED IN DETAIL ENGINEERING
2. LINE TO FWC TO PIPE RACK
3. REMOVED
4. CONTROL VALVE AND INSTRUMENT SIZES ARE PRELIMINARY. REDUCER SIZES TO BE CHECKED IN DETAIL ENGINEERING
5. DELETED.
6. KEMWORKS ISSUED REV. 0 WITH P.E. STAMP EFFECTIVE MARCH 24th, 2000. THIS DRAWING IS BEING MAINTAINED BY AMI.
7. MAKE UP POND WATER LINE TIE-IN SHOULD BE CLOSE TO THE TANK NOZZLE
8. KNIFE GATE VALVE FAIL CLOSED ON SIGNAL FAILURE ONLY
9. FLUSH AND DRAIN OPEN WITH MANUAL PUSH BUTTON PRESSED
10. FOR FWC GENERAL NOTES AND SYMBOLS REFER TO DRAWINGS # 35-10-098 AND # 35-12-266
11. NO AUTOMATIC START OF STANDBY PUMP
12. PREFERENCE TO LEVEL CONTROL IN THE GYPSUM TANK WILL BE GIVEN TO LCV 0018. LCV 0014 WILL BE CLOSED.

HOLDS

AMEC MAY 1
Merit MAY 1
Merit After MAY 1

EQUIPMENT ON THIS DRAWING

EQUIP. NO.	DESCRIPTION	STATUS
CP-0126024	FILTER SUMP AGITATOR	NEW
CP-1726006	FILTER SUMP	NEW
CP-4126043	GYPSUM DISPOSAL PUMP	NEW
CP-4126045	GYPSUM DISPOSAL PUMP	NEW
CP-4126079	FILTER SUMP PUMP	NEW
CP-4126094	GYPSUM DISPOSAL PUMP SEAL WATER PUMP #1	NEW
CP-4126103	GYPSUM DISPOSAL PUMP SEAL WATER PUMP #2	NEW
CP-5126004	GYPSUM SLURRY TANK	NEW

ISSUED FOR CONSTRUCTION

DESTROY PREVIOUS PRINTS

AGRA Monenco
CALGARY
ISSUE
NOV 17 2000

LEGEND:
- INSTALLED COST BY FWC
- ENGINEERING DESIGN AND CONSTRUCTION BY AMI

REV.	REVISION DESCRIPTION	DATE	DRAWN BY	DESIGNED BY	DWG. CHECK	DESIGN CHECK	LEAD DWG/ DEPT. MGR.	P. ENG./ PROJ. MGR.
1	REVISED AS NOTED RE-ISSUED FOR CONSTRUCTION .	00/11/17	PRC	RAJM	SSK	RR		
0	ISSUED FOR CONSTRUCTION	00/06/26	AB	RAJM	SSK	RR		
G	GENERAL REVISIONS	00/05/31	AB	RAJM	SSK	RR		
F	UPDATED FOR HAZOP	00/04/20	AB	RAJM	SSK	RR		
E	ISSUED FOR TIE-IN REVIEW	00/03/28	AB	RAJM	RR			
D	REVISED FWC TIE-INS / ISSUED FOR DESIGN	00/02/17	RPL					
C	ISSUED FOR DESIGN	00/02/08	NRG					
B	FOR DETAIL DESIGN	00/01/26						
A	FOR APPROVAL	00/01/05						

NO.	DWG. NO.	REFERENCE DRAWINGS
8	35-10-098/099	FWC PIPING AND INSTR. SYMBOLS AND NOMENCLATURE P&IDs
7	26-10-120	AGRIUM/FWC TIE-IN POINTS
6	26-10-118	30% P2O5 STORAGE TANK #18
5	26-10-017	PHOS ACID BELT FILTER #2
4	26-10-106	PHOS ACID BELT FILTER #1
3	22-01-103	ROCK GRINDING MILL #1
2	09-10-108	FRESHWATER
1	09-10-000	STANDARD P&ID SYMBOLS

ENGINEERING REVIEW		
P. ENG./ PROJ. MGR.	CFS	00/06/30
LEAD DWG/ DEPT. MGR.	RR	00/07/04
DESIGN CHECK	KEMWORKS	00/02/17
DWG. CHECK	MDW	00/01/05
DESIGNED BY	SMN	00/01/03
DRAWN BY	JKC	00/01/04

THIS DRAWING, THE KNOW-HOW AND INFORMATION DISCLOSED HEREIN ARE THE PROPERTY OF KEMWORKS TECHNOLOGY, INC AND AGRA MONENCO INC. THIS DRAWING MAY NOT BE USED, COPIED OR DISCLOSED EXCEPT AS APPROVED BY KEMWORKS TECHNOLOGY, INC. AND AGRA MONENCO INC. UPON DEMAND BY EITHER PARTY, THIS DRAWING AND ALL COPIES HEREOF SHALL BE RETURNED IMMEDIATELY.

KEMWorks TECHNOLOGY, INC.
8888 IMPERIAL PARKWAY, SUITE 100
MAULBERRY, FLORIDA USA
(863) 648-8306 FAX (863) 647-6218
www.kemworks.com

CLIENT APPROVAL BY DATE
CRH 00/06/19

AGRA MONENCO DWG. NO. Y6000-703-6-105
PROJECT NO. Y600D
SCALE NONE

NU-WEST INDUSTRIES INC.
3010 CONDA ROAD SODA SPRINGS, ID 83276

AGRA Monenco
ENGINEERING GLOBAL SOLUTIONS

CPO EXPANSION PROJECT
PHOS ACID GYPSUM SLURRY
TANK P&ID

DRAWING NO. 26-10-110
REV. 1

CAD FILE NAME: 70351105
LAST UPDATE: 00/11/17

EXHIBIT B

AGR-CBI_003872
SUBJECT TO ALL APPLICABLE CONFIDENTIAL BUSINESS INFORMATION PRIVILEGES

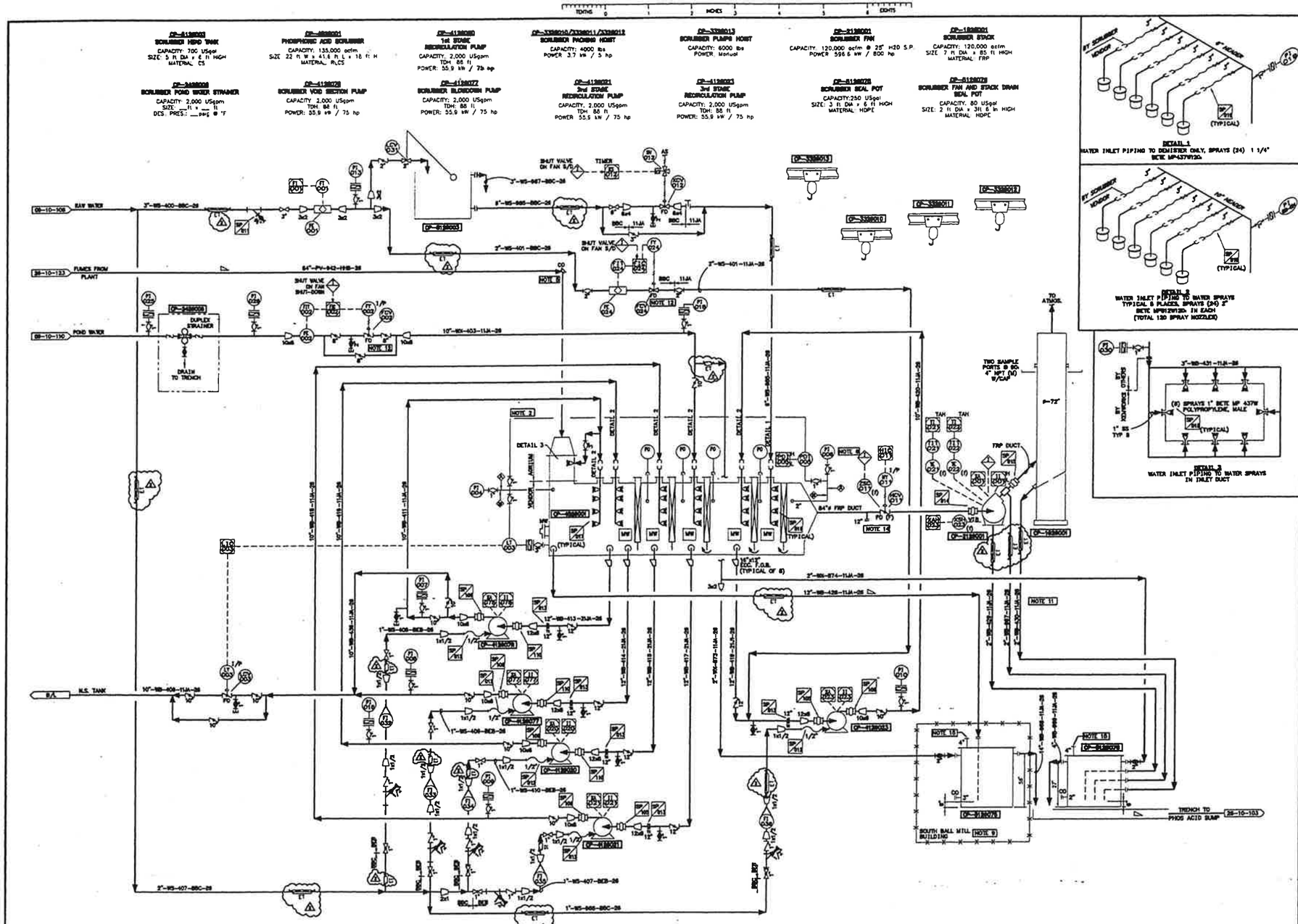

DETAIL 1
WATER INLET PIPING TO DEMISTER ONLY, SPRAYS (24) 1 1/4"
BETE MP-437WV2G.

DETAIL 2
WATER INLET PIPING TO WATER SPRAYS
TYPICAL 8 PLACES, SPRAYS (24) 2"
BETE MP8WV2GD- IN EACH
(TOTAL 192 SPRAY NOZZLES)

DETAIL 3
WATER INLET PIPING TO WATER SPRAYS
IN INLET DUCT

GENERAL NOTES

1. ALL SCRUBBER PUMPS TO HAVE CONNECTING NIPPLE TO SEAL WATER IN HASTELLOY C.
2. INSTALL NEXT TO SCRUBBER TO PREVENT FREEZING.
3. DELETED.
4. DELETED.
5. CLEAN-OUTS REQUIRED AT ELBOWS.
6. FAN DAMPER MUST BE CLOSED BEFORE START-UP.
7. DELETED.
8. EFFECTIVE MARCH 24th, 2000, THIS DRAWING IS BEING MAINTAINED BY AMI.
9. SEAL POT TO BE LOCATED IN S.W. CORNER OF SOUTH BALL MILL BUILDING.
10. PIPING TO PROVIDE HIGH POINT VENTS AND LOW POINT DRAINS.
11. LINES SHALL BE SELF DRAINING (NO POCKETS).
12. VALVE TO FAIL OPEN ONLY ON LOSS OF AIR PRESSURE. VALVE TO FAIL CLOSED ON LOSS OF ELECTRONIC SIGNAL.
13. DELETED.
14. PROVIDE 12" NOZZLE WITH WIRE MESH AND BLIND FLANGE. FLANGE TO BE LEFT OPEN WHEN OPERATING SCRUBBER UNDER REDUCED FUME FLOW CONDITION DURING PHASE 1.
15. PIPING TO PROVIDE 1" STEAM LINE FROM NEAREST STEAM TRAP. INSERT LINE LOOSELY INTO NOZZLE.

HOLDS

EQUIPMENT ON THIS DRAWING

EQUIP. NO.	DESCRIPTION	STATUS
CP-1628001	SCRUBBER STACK	NEW
CP-2128001	SCRUBBER FAN	NEW
CP-2428008	SCRUBBER POND WATER STRAINER	NEW
CP-3328010	SCRUBBER PACKING HOIST	NEW
CP-3328011	SCRUBBER PACKING HOIST	NEW
CP-3328012	SCRUBBER PACKING HOIST	NEW
CP-3328013	SCRUBBER PUMPS HOIST	NEW
CP-4128077	SCRUBBER BLOWDOWN PUMP	NEW
CP-4128021	2ND STAGE RECIRCULATION PUMP	NEW
CP-4128023	3RD STAGE RECIRCULATION PUMP	NEW
CP-4128078	SCRUBBER VOID SECTION PUMP	NEW
CP-4128020	1ST STAGE RECIRCULATION PUMP	NEW
CP-4528001	PHOSPHORIC ACID SCRUBBER	NEW
CP-5128003	SCRUBBER HEAD TANK	NEW
CP-5128075	SCRUBBER SEAL POT	NEW
CP-5128076	SCRUBBER FAN AND STACK DRAIN SEAL POT	NEW

ISSUED FOR CONSTRUCTION

DESTROY PREVIOUS PRINTS

AGRA Monenco
CALGARY
ISSUE
FEB 26 2001

NU-WEST INDUSTRIES INC.
3010 CONDA ROAD SODA SPRINGS, ID 83276

CAD FILE NAME: G:\Y6000\CAD\PIP\PRC\ACRAP&ID\Y0061104.dwg
LAST UPDATE: 01/03/22 7:59am

REV.	REVISION DESCRIPTION	DATE	DRAWN BY	DESIGNED BY	INC. CHECK	DESIGN CHECK	LEAD ENG./ DEPT. MGR.	P. ENG./ PROJ. MGR.
2	REVIEW AS NOTED	01/02/24	TDV	RAJM	SSK			
1	RE-ISSUED FOR CONSTRUCTION	00/12/06	PRC	RAJM	SSK	RR	RR	LAF
0	GENERAL REVISIONS - ISSUED FOR CONSTRUCTION	00/05/18	AB	RAJM	SSK	RR		
G	GENERAL REVISIONS & HAZOP RECOMMENDATIONS	00/04/27	AB	RAJM	SSK	RR		
F	ISSUED FOR TIE-IN REVIEW	00/03/27	AB	RAJM	RR			
E	ISSUED FOR DESIGN	00/02/17	RPL					
D	ISSUED FOR DETAIL DESIGN	00/02/17	NRG					
C	FOR QUOTATION	99/12/16	NRG					

NO.	DWG. NO.	REFERENCE DRAWINGS
8		
7		
6		
5	26-10-123	PHASE 2 VENTILATION DUCTING SHT.3
4	26-10-103	PHOS ACID COOLERS PRECONDENSERS
3	09-10-111	COOLING POND WATER LOOP - FILTRATION, GRINDING, SCRUBBING
2	09-10-108	FRESHWATER
1	09-10-100	STANDARD P&ID SYMBOLS

ENGINEERING REVIEW		
P. ENG./ PROJ. MGR.		
LEAD ENG./ DEPT. MGR.		
DESIGN CHECK	KEMWORKS	99/12/02
INC. CHECK	MDW	99/12/02
DESIGNED BY	NRG	99/11/30
DRAWN BY	JKC	99/11/30

THIS DRAWING, THE KNOW-HOW AND INFORMATION DISCLOSED HEREIN ARE THE PROPERTY OF KEMWORKS TECHNOLOGY, INC. AND AGRA MONENCO INC. THIS DRAWING MAY NOT BE USED, COPIED OR DISCLOSED EXCEPT AS APPROVED BY KEMWORKS TECHNOLOGY, INC. AND AGRA MONENCO INC. UPON DEMAND BY EITHER PARTY, THIS DRAWING AND ALL COPIES HEREOF SHALL BE RETURNED IMMEDIATELY.

KEMWORKS TECHNOLOGY, INC.
2555 INTERNAL PARKWAY, SUITE 100
MISSISSAUGA, ON, CANADA L5B 1V1
(905) 845-6285 FAX (905) 847-8816
www.kemworks.com

AGRA Monenco
ENGINEERING GLOBAL SOLUTIONS

CPO EXPANSION PROJECT
PHOS ACID
SCRUBBER P&ID

CLIENT APPROVAL BY DATE

AGRA MONENCO INC. NO. Y600D-400-6-104
PROJECT NO. Y600D
SCALE NONE
DRAWING NO. 26-10-112
REV. 2

EXHIBIT B

AGR-CBI_003873
SUBJECT TO ALL APPLICABLE CONFIDENTIAL BUSINESS INFORMATION PRIVILEGES

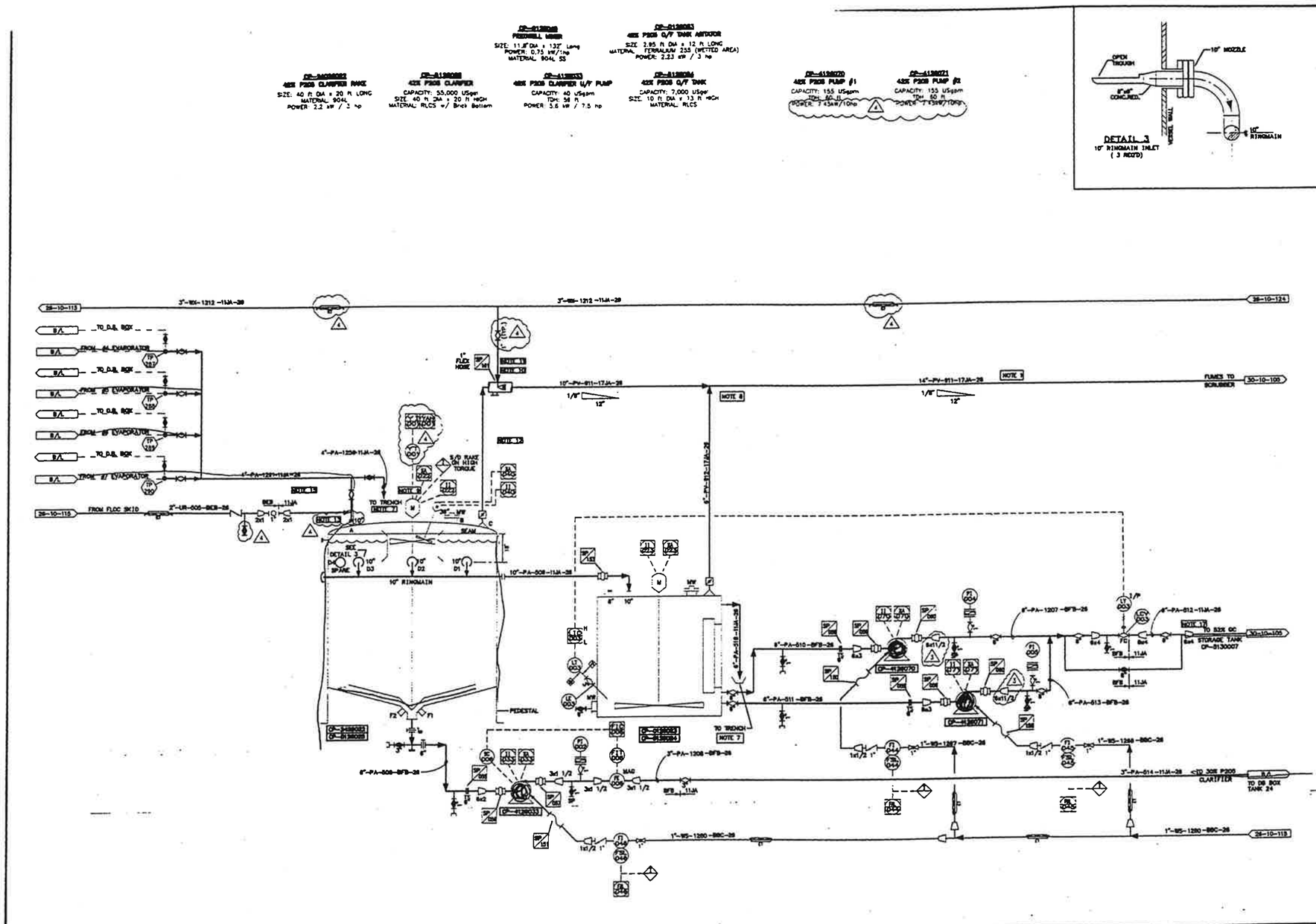

GENERAL NOTES

1. DELETED.
2. DELETED.
3. DELETED.
4. DELETED.
5. KEMWORKS ISSUED REV. C WITH P.E. STAMP. EFFECTIVE MARCH 24th, 2000, THIS DRAWING IS BEING MAINTAINED BY AMI.
6. DELETED
7. PIPE TO TRENCH TERMINATING LINE 6" ABOVE TRENCH TO PROVIDE VISUAL INDICATION OF FLOW.
8. LATERAL CONNECTIONS (IN DIRECTION OF FLOW) TO BE USED ON DUCTING WHEREVER POSSIBLE.
9. DRIVE MECHANISM CONSIST OF 3 MOTORS : 1 FOR LIFTING, 1 FOR RAKE AND 1 FOR AGITATOR.
10. USE BETE WT RIGHT ANGLE HOLLOW CONE SPRAY NOZZLES MODEL 3/4" WT 2000, 90°,TEFLON FOR 10 GPM @ 10 PSIG.
11. INSTALL LOW POINT DRAIN WITH SEAL POT TO DRAIN THE SPRAY WATER.
12. SPRAY TO BE LOCATED EVERY 80ft AND AWAY FROM TANK.
13. OVERFLOW NOZZLE TO BE BUNDED.
15. TIE-IN FLOCLINE JUST AHEAD OF LAST ELBOW IN LINE FROM EVAPORATION TO CLARIFIER.
16. CLARIFIER AND OVERFLOW TANK WILL NOW RECEIVE 52% ACID NOT 42% ACID.
17. NEW SECTION TO 52% G.C. STORAGE TANK CAN BE 4". LEAVE EXISTING AS 6"

EQUIPMENT ON THIS DRAWING

EQUIP. NO.	DESCRIPTION	STATUS
CP-0128029	42X P205 O/F TANK AGITATOR	NEW
CP-0128028	FEED WELL MIXER	NEW
CP-0128002	42X P205 CLARIFIER RAKE	NEW
CP-0128033	42X P205 CLARIFIER U/F PUMP	NEW
CP-0128070	42X P205 PUMP #1	NEW
CP-0128071	42X P205 PUMP #2	NEW
CP-0128024	42X P205 O/F TANK	NEW
CP-0128025	42X P205 CLARIFIER	NEW

ISSUED FOR CONSTRUCTION

DESTROY PREVIOUS PRINTS

AGRA Monenco
CALGARY
ISSUE
MAY 14 2001

REV.	REVISION DESCRIPTION	DATE	DRAWN BY	DESIGNED BY	DWG. CHECK	DESIGN CHECK	LEAD ENG./ SOFT. MGR.	P. ENG./ PROJ. MGR.
4	REVISED AS NOTED	01/05/14	LH	RAJM	SSK	RR		
3	REVISED AS NOTED	01/04/30	TDV					
2	REVISED AS NOTED - GRADE CONTROL MODIFICATIONS	01/04/23	TL	RAJM	SSK	RR		
1	REVISED AS NOTED RE-ISSUED FOR CONSTRUCTION	00/[illegible]/17	PRC	RAJM	SSK	RR		
0	ISSUED FOR CONSTRUCTION	00/06/30	AB	RAJM	SSK	RR		
F	GENERAL REVISIONS	00/06/01	AB	RAJM	SSK	RR		
E	UPDATED FOR HAZOP	00/04/27	AB	RAJM	SSK	RR		
D	ISSUED FOR TIE-IN REVIEW	00/03/28	AB	RAJM	RR			

NO.	DWG. NO.	REFERENCE DRAWINGS
8		
7		
6		
5		
4		
3	30-10-105	52% GRADE CONTROL STORAGE TANK
2	26-10-115	PHOS ACID GRADE CONTROL
1	09-10-000	STANDARD P&ID SYMBOLS

ENGINEERING REVIEW		
P. ENG./ PROJ. MGR.	DFS	00/07/04
LEAD ENG./ SOFT. MGR.	RR	00/06/30
DESIGN CHECK	KEMWORKS	00/02/17
DWG. CHECK	MDW	99/12/23
DESIGNED BY	RTS	99/12/22
DRAWN BY	JKC	99/12/22

THIS DRAWING, THE KNOW-HOW AND INFORMATION DISCLOSED HEREIN ARE THE PROPERTY OF KEMWORKS TECHNOLOGY, INC. AND AGRA MONENCO INC. THIS DRAWING MAY NOT BE USED, COPIED OR DISCLOSED EXCEPT AS APPROVED BY KEMWORKS TECHNOLOGY, INC. AND AGRA MONENCO INC. UPON DEMAND BY EITHER PARTY, THIS DRAWING AND ALL COPIES HEREOF SHALL BE RETURNED IMMEDIATELY.

KEMWORKS TECHNOLOGY, INC.
6600 INTERNATIONAL PARKWAY, SUITE 100
HOLLYWOOD, FLORIDA, USA
(954) 848-3300 FAX (954) 847-2819
www.kemworks.com

CLIENT APPROVAL BY DATE
DRN 00/06/02

AGRA MONENCO DWG. NO. Y600D-702-6-101
PROJECT NO. Y600D
SCALE NONE

NU-WEST INDUSTRIES INC.
3010 CONDA ROAD SODA SPRINGS, ID 83276

AGRA Monenco
ENGINEERING GLOBAL SOLUTIONS

CPO EXPANSION PROJECT
PHOS ACID 42% P205
CLARIFIER P&ID

DRAWING NO. 26-10-113
REV. 4

EXHIBIT B

AGR-CBI_003874
SUBJECT TO ALL APPLICABLE CONFIDENTIAL BUSINESS INFORMATION PRIVILEGES

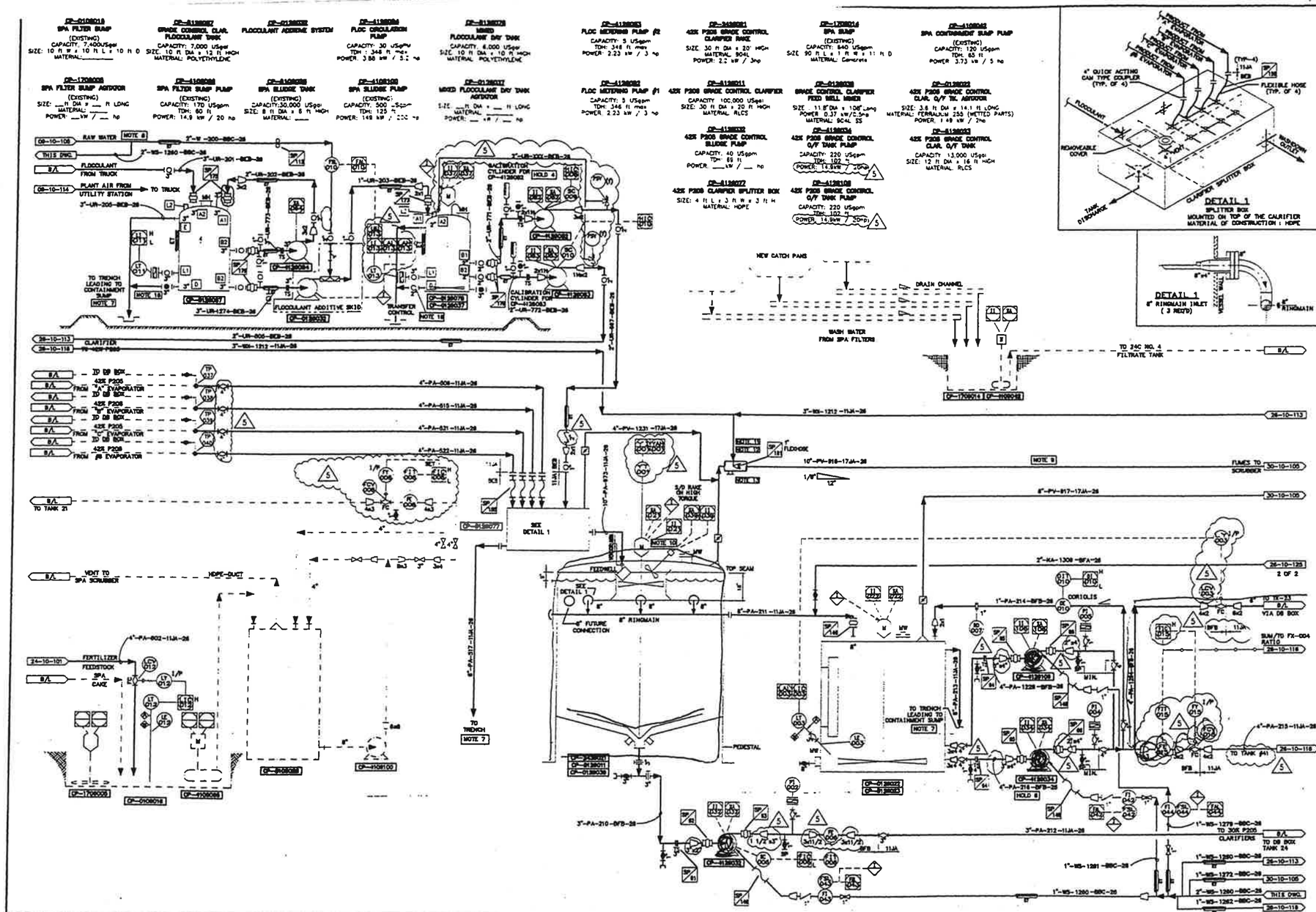

GENERAL NOTES

1. SPA SLUDGE TANK IS AN EXISTING TANK, NOZZLES TO BE DETERMINED IN DETAIL ENGINEERING.
2. DELETED.
3. CONTROL VALVE AND INSTRUMENT SIZES ARE PRELIMINARY, REDUCER SIZES TO BE CHECKED IN DETAIL ENGINEERING.
4. DELETED.
5. DELETED.
6. KEMWORKS ISSUED REV. C WITH P.E. STAMP, EFFECTIVE MARCH 24th, 2000, THIS DRAWING IS BEING MAINTAINED BY AMI.
7. PIPE TO TRENCH TERMINATING LINE 8" ABOVE TRENCH TO PROVIDE VISUAL INDICATION OF FLOW.
8. TRACING TO BE ELECTRICAL HEAT TAPE LIMITING TEMPERATURE TO 120° F.
9. LATERAL CONNECTIONS (IN DIRECTION OF FLOW) SHALL BE USED ON DUCTING WHEREVER POSSIBLE.
10. DRIVER MECHANISM CONSIST OF 3 MOTORS : 1 FOR LIFTING, 1 FOR RAKE AND 1 FOR AGITATOR.
11. USE BETE WT RIGHT ANGLE HOLLOW CONE SPRAY NOZZLES MODEL 3/4" WT 2000, 90°,TEFLON FOR 10 GPM @ 10 PSIG.
12. INSTALL LOW POINT DRAIN WITH SEAL POT TO DRAIN THE SPRAY WATER.
13. SPRAY TO BE LOCATED EVERY 80ft AND AWAY FROM TANK.
14. OVERFLOW NOZZLE TO BE BLINDED.
15. FEED LINES FROM EVAPORATOR AND FLOC SYSTEM TO BE DIRECTED TO A SPLITTER BOX MOUNTED ON TOP OF THE CLARIFIER. (SEE DETAIL 1).
16. OVERFLOW LINE AND DRAIN VALVE SUPPLIED BY VENDOR

HOLDS

EQUIPMENT ON THIS DRAWING

	DESCRIPTION	STATUS
CP-0108018	SPA FILTER SUMP	EXIST
CP-0128022	42X P205 GRADE CONTROL CLAR. Q/F TK. AGITATOR	NEW
CP-0128032	FLOCCULANT ADDITIVE SYSTEM	NEW
CP-0128037	MIXED FLOCCULANT DAY TANK AGITATOR	NEW
CP-0128038	GRADE CONTROL CLARIFIER FEED WELL MIXER	NEW
CP-1708005	SPA FILTER SUMP AGITATOR	EXIST
CP-1708014	SPA SUMP	EXIST
CP-2428021	42X P205 GRADE CONTROL CLARIFIER RAKE	NEW
CP-4108042	SPA CONTAINMENT SUMP PUMP	EXIST
CP-4108008	SPA FILTER SUMP PUMP	EXIST
CP-4108100	SPA SLUDGE PUMP	EXIST
CP-4128032	42X P205 GRADE CONTROL SLUDGE PUMP	NEW
CP-4128034	42X P205 GRADE CONTROL Q/F TANK PUMP	NEW
CP-4128082	FLOC METERING PUMP #1	NEW
CP-4128083	FLOC METERING PUMP #2	NEW
CP-4128084	FLOC CIRCULATION PUMP	NEW
CP-5108098	SPA SLUDGE TANK	EXIST
CP-5128011	42X P205 GRADE CONTROL CLARIFIER	NEW
CP-5128023	42X P205 GRADE CONTROL CLAR. Q/F TANK	NEW
CP-5128087	GRADE CONTROL CLAR. FLOCCULANT TANK	NEW
CP-5128078	MIXED FLOCCULANT DAY TANK	NEW
CP-5128077	42X P205 CLARIFIER SPLITTER BOX	NEW
CP-4128108	42X P205 GRADE CONTROL Q/F TANK PUMP	NEW

4

ISSUED FOR CONSTRUCTION

DESTROY PREVIOUS PRINTS

AGRA Monenco CALGARY ISSUE MAY 14 2001

REV.	REVISION DESCRIPTION	DATE	DRAWN BY	DESIGNED BY	DWG. CHECK	DESIGN CHECK	LEAD ENG./ DEPT. MGR.	P. ENG./ PROJ. MGR.
5	REVISED AS NOTED	01/05/14	LH	RAJM	SSK	RR		
4	REVISED AS NOTED	01/04/30	TDV	RAJM	SSK			
3	REVISED AS NOTED - GRADE CONTROL MODIFICATIONS	01/04/03	TL	RAJM	SSK	RR	RR	JAF
2	REVISED AS NOTED	00/12/20	PRC	RAJM	SSK	RR	RR	JAF
1	REVISED AS NOTED RE-ISSUED FOR CONSTRUCTION	00/11/20	PRC	RAJM	SSK	RR	RR	JAF
D	ISSUED FOR CONSTRUCTION	00/06/30	AB	RAJM	SSK	RR	RR	DMC
F	GENERAL REVISIONS	00/06/02	AB	RAJM	SSK	RR		
E	UPDATED FOR HAZOP	00/04/20	TDP	RAJM	RR			

NO.	DWG. NO.	REFERENCE DRAWINGS
8		
7	30-10-105	42X GRADE CONTROL STORAGE TANK
6	26-10-116	42X ACID GRADE CONTROL STORAGE TANK
5	26-10-113	PHOS ACID 42X P205 CLARIFIER
4	24-10-101	ROCK GRINDING MILL #2
3	09-10-114	PLANT AND INSTRUMENT AIR
2	09-10-108	FRESHWATER
1	09-10-100	P&ID STANDARD SYMBOLS

ENGINEERING REVIEW		
P. ENG./ PROJ. MGR.	DWO	00/07/04
LEAD ENG./ DEPT. MGR.	RR	00/06/30
DESIGN CHECK	KEMWORKS	00/03/17
DWG. CHECK	MDW	99/12/23
DESIGNED BY	NRG	99/12/22
DRAWN BY	JKC	99/12/22

THIS DRAWING, THE KNOW-HOW AND INFORMATION DISCLOSED HEREIN ARE THE PROPERTY OF KEMWORKS TECHNOLOGY, INC. AND AGRA MONENCO INC. THIS DRAWING MAY NOT BE USED, COPIED OR DISCLOSED EXCEPT AS APPROVED BY KEMWORKS TECHNOLOGY, INC AND AGRA MONENCO INC. UPON DEMAND BY EITHER PARTY, THIS DRAWING AND ALL COPIES HEREOF SHALL BE RETURNED IMMEDIATELY.

KEMWORKS TECHNOLOGY, INC.
6325 IMPERIAL PARKWAY, SUITE 400
MILESBORO, FLORIDA USA
(863) 940-6000 FAX (863) 647-2819
www.kemworks.com

CLIENT APPROVAL BY DATE CRH 00/06/02

AGRA MONENCO DWG. NO. Y600D-200-6-101
PROJECT NO. Y600D
SCALE NONE

NU-WEST INDUSTRIES INC.
3010 CONDA ROAD SODA SPRINGS, ID 83276

AGRA Monenco
ENGINEERING GLOBAL SOLUTIONS

CPO EXPANSION PROJECT
PHOS ACID GRADE CONTROL
CLARIFIER P&ID

DRAWING NO. 26-10-115 REV. 5

EXHIBIT B

AGR-CBI_003875
SUBJECT TO ALL APPLICABLE CONFIDENTIAL BUSINESS INFORMATION PRIVILEGES

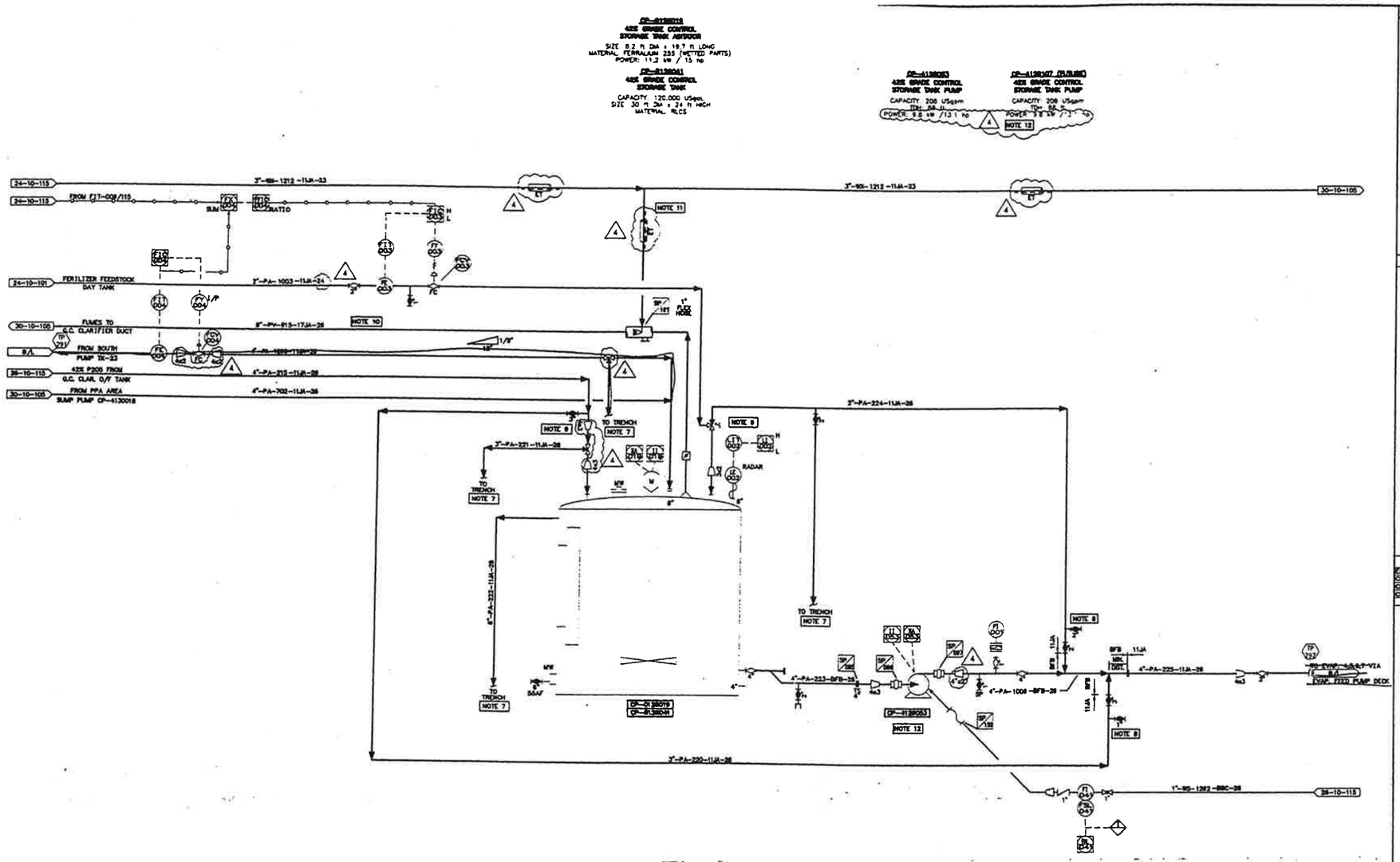

GENERAL NOTES

1. DELETED.
2. DELETED.
3. DELETED.
4. EXISTING METER MAY NEED RELOCATING CLOSER TO EVAPORATOR.
5. DELETED.
6. KEMWORKS ISSUED REV. C WITH P.E. STAMP. EFFECTIVE MARCH 24th, 2000, THIS DRAWING IS BEING MAINTAINED BY AMI.
7. PIPE TO TRENCH TERMINATING LINE 6" ABOVE TRENCH TO PROVIDE VISUAL INDICATION OF FLOW.
8. LOW POINT DRAIN.
9. LOCATE VALVES CLOSE TO EACH OTHER TO PREVENT SLUDGE ACCUMULATION ON IDLE SECTION OF LINE.
10. LATERAL CONNECTIONS (IN DIRECTION OF FLOW) SHALL BE USED ON DUCTING WHEREVER POSSIBLE.
11. USE BETE NT RIGHT ANGLE HOLLOW CONE SPRAY NOZZLES MODEL 3/4" NT 2000, 80°,TEFLON FOR 10 GPM @ 10 PSIG
12. ALLOWANCE TO BE MADE FOR A FUTURE STANDBY PUMP CP-0128107.

HOLDS

EQUIPMENT ON THIS DRAWING

EQUIP. NO.	DESCRIPTION	STATUS
CP-0128018	42% GRADE CONT. STORAGE TK. AGITATOR	NEW
CP-0128053	42% GRADE CONT. STORAGE TANK PUMP	NEW
CP-0128041	42% GRADE CONT. STORAGE TANK	NEW

ISSUED FOR CONSTRUCTION

DESTROY PREVIOUS PRINTS

AGRA Monenco
CALGARY
ISSUE
MAY 14 2001

NU-WEST INDUSTRIES INC.
3010 CONDA ROAD SODA SPRINGS, ID 83276

AGRA Monenco
ENGINEERING GLOBAL SOLUTIONS

CPO EXPANSION PROJECT
42% ACID GRADE CONTROL
STORAGE TANK P&ID

DRAWING NO. 26-10-116 REV. 4

REV.	REVISION DESCRIPTION	DATE	DRAWN BY	DESIGNED BY	DWG. CHECK	DESIGN CHECK	LEAD DWG./DEPT. MGR.	P. ENG./PROJ. MGR.
4	REVISED AS NOTED	01/05/14	LH	RAJM	SSK	RR		
3	REVISED AS NOTED	01/04/30	TDV					
2	REVISED AS NOTED - GRADE CONTROL MODIFICATIONS	01-04/22	TL	RAJM	SSK	PR	RR	LAF
1	REVISED AS NOTED RE-ISSUED FOR CONSTRUCTION	00/1[illegible]/17	PRC	RAJM	SSK	PR	RR	LAF
0	ISSUED FOR CONSTRUCTION	00/06/30	AB	RAJM	SSK	RR		
E	REVISED AS NOTED	00/06/22	AB	RAJM	SSK	RR		
D	ISSUED FOR TIE -IN REVIEW	00/03/28	AB	RAJM	RR			
C	ISSUED FOR DESIGN	00/02/17	RPL					

NO.	DWG. NO.	REFERENCE DRAWINGS
5		
4	30-10-105	54% GRADE CONTROL STORAGE TANK
3	26-10-113	PHOS ACID GRADE CONTROL
2	24-10-101	DAP PLANT PIPE REACTOR
1	09-10-100	STANDARD P&ID SYMBOLS

ENGINEERING REVIEW		
P. ENG./PROJ. MGR.	GFS	00/07/04
LEAD ENG./DEPT. MGR.	RR	00/06/30
DESIGN CHECK	KEMWORKS	00/02/17
DWG. CHECK	WDW	99/12/23
DESIGNED BY	NRC	99/12/22
DRAWN BY	JKC	99/12/22

THIS DRAWING, THE KNOW-HOW AND INFORMATION DISCLOSED HEREIN ARE THE PROPERTY OF KEMWORKS TECHNOLOGY, INC. AND AGRA MONENCO INC. THIS DRAWING MAY NOT BE USED, COPIED OR DISCLOSED EXCEPT AS APPROVED BY KEMWORKS TECHNOLOGY, INC. AND AGRA MONENCO INC. UPON DEMAND BY EITHER PARTY, THIS DRAWING AND ALL COPIES HEREOF SHALL BE RETURNED IMMEDIATELY.

KEMWORKS TECHNOLOGY, INC.
[illegible] INTERNATIONAL PARKWAY, SUITE [illegible]
[illegible] SANFORD, FLORIDA, USA
(863) 644-[illegible] FAX (863) 647-[illegible]
www.kemworks.com

CLIENT APPROVAL BY DATE: CRH 00/06/02

AGRA MONENCO DWG. NO.: Y600D-200-6-102
PROJECT NO.: Y600D
SCALE: NONE

EXHIBIT B

AGR-CBI_003876
SUBJECT TO ALL APPLICABLE CONFIDENTIAL BUSINESS INFORMATION PRIVILEGES

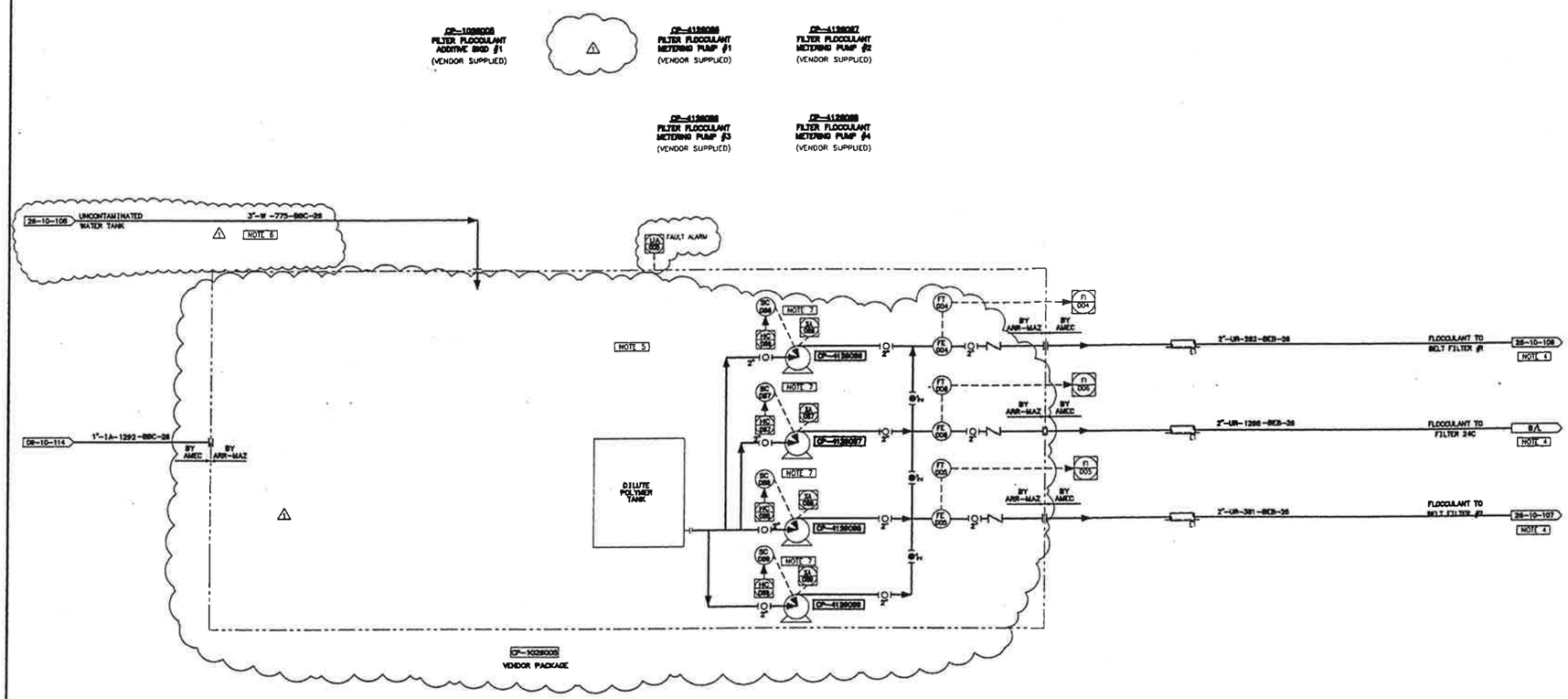

GENERAL NOTES

NOTE:

1. DELETED
2. DELETED.
3. KEMWORKS ISSUED REV. C WITH P.E. STAMP. EFFECTIVE MARCH 24th, 2000, THIS DRAWING IS BEING MAINTAINED BY AMI.
4. FLOCCULANT TO FILTERS WILL BE TIED IN AT THREE LOCATIONS ALONG THE FEED LINES.
5. BULK BAG CONVEYOR AND HOPPER LOCATED IN AN INSULATED 10'x12' BUILDING ADJACENT TO FILTER BUILDING.
6. ARR-MAZ TO INSTALL PIPING TO EXISTING UNCONTAMINATED WATER SYSTEM.
7. AMEC TO PROVIDE VFD FOR THE FLOC. METERING PUMPS.

HOLDS

1. ARR-MAZ DRAWING #. (CRH)

EQUIPMENT ON THIS DRAWING

EQUIP. No.	DESCRITIONS	STATUS
CP-1028005	FILTER FLOCCULANT ADDITIVE SKID #1	NEW
~~CP-1028006~~	~~FILTER FLOCCULANT ADDITIVE SKID #2~~	~~NEW~~
CP-4126086	FILTER FLOCCULANT METERING PUMP #1	NEW
CP-4126087	FILTER FLOCCULANT METERING PUMP #2	NEW
CP-4126088	FILTER FLOCCULANT METERING PUMP #3	NEW
CP-4126089	FILTER FLOCCULANT METERING PUMP #4	NEW
~~CP-4126090~~	~~FILTER FLOCCULANT METERING PUMP #5~~	~~NEW~~
~~CP-4126091~~	~~FILTER FLOCCULANT METERING PUMP #6~~	~~NEW~~
~~CP-4126092~~	~~FILTER FLOCCULANT METERING PUMP #7~~	~~NEW~~
~~CP-4126093~~	~~FILTER FLOCCULANT METERING PUMP #8~~	~~NEW~~

ISSUED FOR CONSTRUCTION

DESTROY PREVIOUS PRINTS

AGRA Monenco
CALGARY
ISSUE
MAY 14 2001

NU-WEST INDUSTRIES INC.
3010 CONDA ROAD SODA SPRINGS, ID 83276

REV.	REVISION DESCRIPTION	DATE	DRAWN BY	DESIGNED BY	DWG. CHECK	DESIGN CHECK	LEAD ENG./ DEPT. MGR.	P. ENG./ PROJ. MGR.
1	SCOPE UPDATE	01/05/14	LH	RAJM	SSK	RR		
0	ISSUED FOR CONSTRUCTION	01/02/26	TDV					
E	ISSUED FOR COMMENTS & APPROVAL	01/01/22	PRC	RAJM	SSK	RR		
D	ISSUED FOR INFORMATION/COMMENTS - SYSTEM REVISED	00/07/21	AB	RAJM	SSK	RR		
C	ISSUED FOR DESIGN	00/02/17	RPL					
B	FOR DETAIL DESIGN	00/01/28						
A	FOR APPROVAL	00/01/05						

NO.	DWG. NO.	REFERENCE DRAWINGS
8		
7		
6		
5		
4		
3		
2		
1	HOLD 1	ARR-MAZ DRY POLYMER-SYSTEM

ENGINEERING REVIEW		
P. ENG./ PROJ. MGR.		
LEAD ENG./ DEPT. MGR.		
DESIGN CHECK	KEMWORKS	00/02/17
DWG. CHECK	MDW	00/01/05
DESIGNED BY	NRG	00/01/03
DRAWN BY	JKC	00/01/04

THIS DRAWING, THE KNOW-HOW AND INFORMATION DISCLOSED HEREIN ARE THE PROPERTY OF KEMWORKS TECHNOLOGY, INC. AND AGRA MONENCO INC. THIS DRAWING MAY NOT BE USED, COPIED OR DISCLOSED EXCEPT AS APPROVED BY KEMWORKS TECHNOLOGY, INC. AND AGRA MONENCO INC. UPON DEMAND BY EITHER PARTY, THIS DRAWING AND ALL COPIES HEREOF SHALL BE RETURNED IMMEDIATELY.

KEMWORKS TECHNOLOGY, INC.
9555 INTERNATIONAL PARKWAY, SUITE 100
JACKSONVILLE, FLORIDA 32219
(903) 645-8388 FAX (903) 647-8010
www.kemworks.com

CLIENT APPROVAL BY CRH DATE 00/08/03

AGRA MONENCO DWG. NO. Y600D-703-6-106
PROJECT NO. Y600D
SCALE NONE

AGRA Monenco
ENGINEERING GLOBAL SOLUTIONS

CPO EXPANSION PROJECT
FILTER FLOCCULANT SKID
P&ID

DRAWING NO. 26-10-117
REV. 1

EXHIBIT B

AGR-CBI_003877
SUBJECT TO ALL APPLICABLE CONFIDENTIAL BUSINESS INFORMATION PRIVILEGES

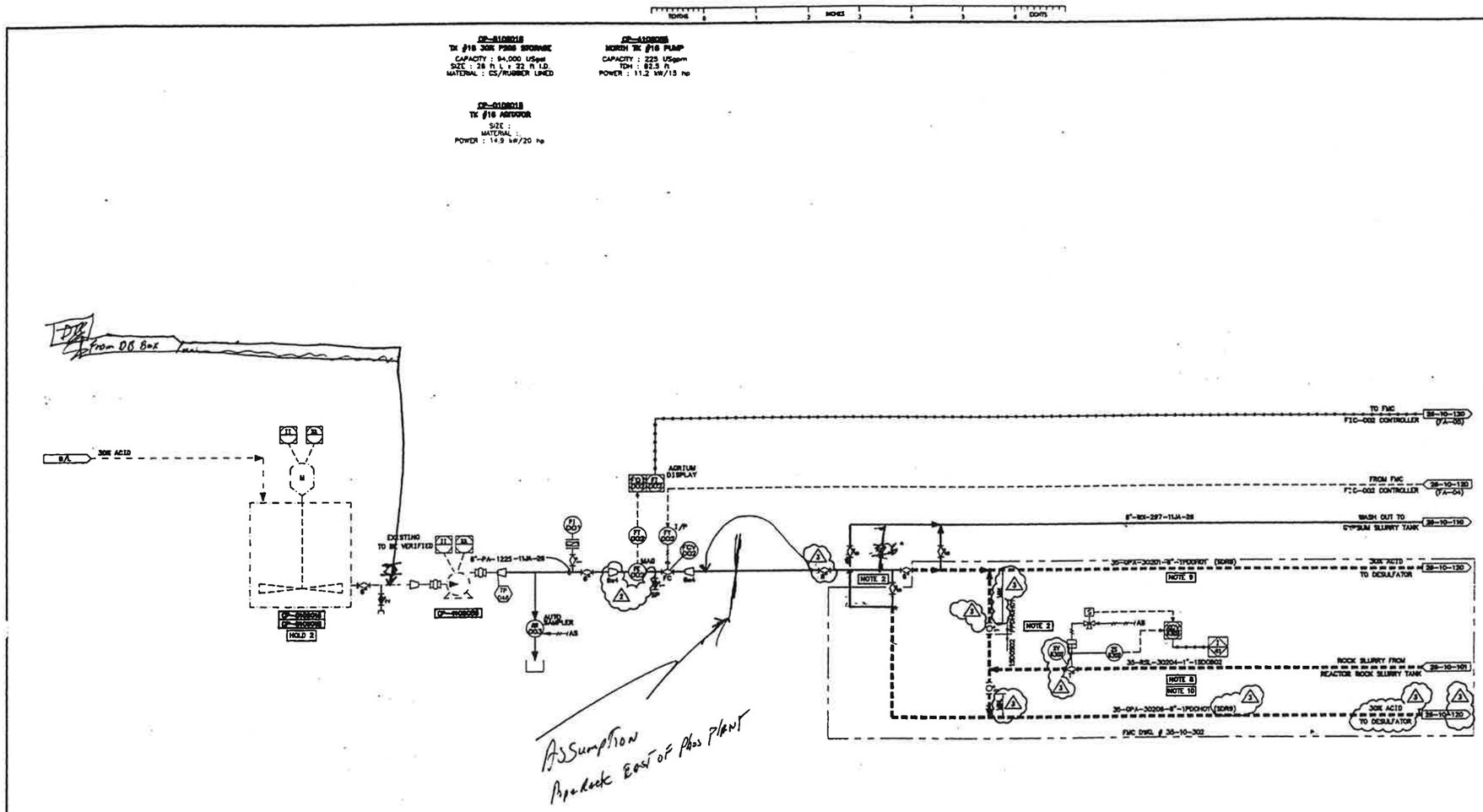

GENERAL NOTES

1. TANK CP-5106018 IS AN EXISTING TANK NOZZLES TO BE DETERMINED IN DETAIL ENGINEERING.
2. LOCKTE VALVES AS CLOSE TO TEES AS POSSIBLE.
3. NO POCKETS.
4. LINE 35-RSL-30204 MUST BE AS SHORT AS POSSIBLE.
5. ALL CHANGES OF DIRECTION IN 35-GPA-30201 TO BE MADE USING 4-WAY TEES WITH TWO DIRECTIONS BLINDED FOR CLEANING.
6. DELETED.
7. KEMWORKS ISSUED REV. C WITH P.E. STAMP, EFFECTIVE MARCH 24th, 2000, THIS DRAWING IS BEING MAINTAINED BY AMI.
8. LINE 35-RSL-30204 MUST BE AS SHORT AS POSSIBLE. NO POCKETS.
9. MINIMIZE POCKETS.
10. FOR FMC GENERAL NOTES AND SYMBOLS REFER TO DRAWINGS # 35-10-086 AND # 35-10-099.

HOLDS

2. DATA ON EXISTING EQUIPMENT. (CRH)

AMEC MAT'L
MONT MAT'L
MERIT AFTER MAT'L

EQUIPMENT ON THIS DRAWING

EQUIP. NO.	DESCRIPTION	STATUS
CP-0106015	TK #18 AGITATOR	EXIST
CP-1706014	SPA SUMP	EXIST
CP-4106042	SPA CONTAINMENT SUMP PUMP	EXIST
CP-4106055	NORTH TK #18 PUMP	EXIST
CP-5106018	TK #18 30% P205 STORAGE	EXIST

ISSUED FOR CONSTRUCTION

DESTROY PREVIOUS PRINTS

AGRA Monenco
CALGARY
ISSUE
APRIL 05 2001

LEGEND:
- - - - - - INSTALLED COST BY FMC
- - - - - - ENGINEERING DESIGN AND CONSTRUCTION BY AMI

REV.	REVISION DESCRIPTION	DATE	DRAWN BY	DESIGNED BY	ENG. CHECK	DESIGN CHECK	LEAD ENG./ DEPT. MGR.	P. ENG./ PROJ. MGR.
3	REVISED AS NOTED	01/04/05	TL	RAJM				
2	REVISED AS NOTED	01/02/26	TDV	RAJM	SSK	RR	RR	
1	REVISED AS NOTED RE-ISSUED FOR CONSTRUCTION	00/12/06	PRC	RAJM	SSK	RR	RR	LAF
0	ISSUED FOR CONSTRUCTION	00/06/30	AB	RAJM	SSK	RR		
E	REVISED AS NOTED	00/06/02	AB	RAJM	SSK	RR		
D	ISSUED FOR TIE-IN REVIEW	00/03/28	AB	RAJM	RR			
C	ISSUED FOR DESIGN	00/02/18	RPL					
B	FOR APPROVAL	00/02/08						
A	FOR APPROVAL	99/12/23						

NO.	DWG. NO.	REFERENCE DRAWINGS
8		
7		
6	35-10-098/099	FMC PIPING AND INSTR. SYMBOLS AND NOMENCLATURE P&IDs
5	35-10-302	FMC PURIFIED PHOSPHORIC ACID PLANT
4	26-10-120	ACRITUM / FMC TIE-IN POINTS
3	26-10-110	PHOS ACID GYPSUM SLURRY TANK
2	26-10-101	PHOS ACID ROCK SLURRY
1	08-10-100	STANDARD P&ID SYMBOLS

ENGINEERING REVIEW		
P. ENG./ PROJ. MGR.		
LEAD ENG./ DEPT. MGR.		
DESIGN CHECK	KEMWORKS	00/02/18
ENG. CHECK	MDW	99/12/23
DESIGNED BY	SMH	99/12/22
DRAWN BY	JKC	99/12/23

THIS DRAWING, THE KNOW-HOW AND INFORMATION DISCLOSED HEREIN ARE THE PROPERTY OF KEMWORKS TECHNOLOGY, INC AND AGRA MONENCO INC. THIS DRAWING MAY NOT BE USED, COPIED OR DISCLOSED EXCEPT AS APPROVED BY KEMWORKS TECHNOLOGY, INC AND AGRA MONENCO INC. UPON DEMAND BY EITHER PARTY, THIS DRAWING AND ALL COPIES HEREOF SHALL BE RETURNED IMMEDIATELY.

KEMWORKS TECHNOLOGY, INC.
5005 INTERNATIONAL PARKWAY, SUITE 140
MINI BOSQUE, FLORIDA, USA
(863) 646-0000 FAX (863) 647-4819
www.kemworks.com

CLIENT APPROVAL BY CRH 20/06/00

AGRA MONENCO DWG. NO. Y600D-702-6-102
PROJECT NO. Y600D
SCALE NONE

NU-WEST INDUSTRIES INC.
3010 COMER ROAD SODA SPRINGS, ID 83276

AGRA Monenco
ENGINEERING GLOBAL SOLUTIONS

CPO EXPANSION PROJECT
30% P205 STORAGE
TANK #18 P&ID

DRAWING NO. 26-10-118
REV. 3

CAD FILE NAME: G:\Y6000\CAD\PIP\PRC\AGRAFINAL\702610118.dwg
LAST UPDATE: 01/04/2 11:28am

EXHIBIT B

AGR-CBI_003878
SUBJECT TO ALL APPLICABLE CONFIDENTIAL BUSINESS INFORMATION PRIVILEGES

TABLE 1

CONNECTION SCHEDULE

MARK	TYPE	BY
A1	#12 BULKHEAD (M)	BASIC TECHNOLOGIES
B1	#12 BULKHEAD (M)	BASIC TECHNOLOGIES
C1	#12 BULKHEAD (F)	CONTRACTOR
D1	#12 BULKHEAD (F)	CONTRACTOR
E1	1" NPT (M)	CONTRACTOR
F1	1" NPT (M)	CONTRACTOR
G1	1" NPT (F)	CLARKSON
H1	1" NPT (F)	CLARKSON
A2	#12 BULKHEAD (M)	BASIC TECHNOLOGIES
B2	#12 BULKHEAD (M)	BASIC TECHNOLOGIES
C2	#12 BULKHEAD (F)	CONTRACTOR
D2	#12 BULKHEAD (F)	CONTRACTOR
E2	1" NPT (M)	CONTRACTOR
F2	1" NPT (M)	CONTRACTOR
G2	1" NPT (F)	CLARKSON
H2	1" NPT (F)	CLARKSON

0

CP-5828001
HYDRAULIC POWER UNIT
CAPACITY: 31 US GAL (120L)
DPP/DCS PRESS 2000/2650 PSI
HYD. FLUID: MINERAL OIL ISO VG32
POWER: 11.2 kW/15 HP

0

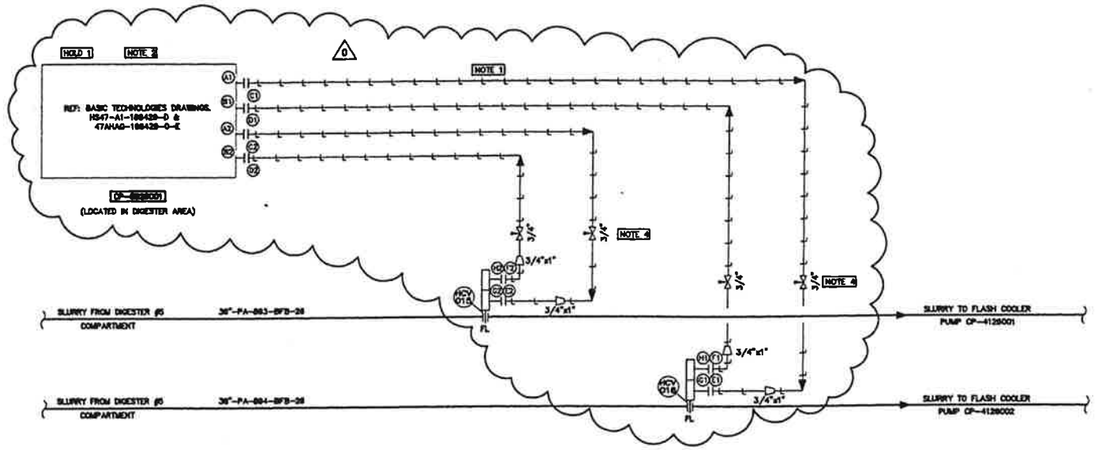

GENERAL NOTES

1. ALL HYDRAULIC TUBING MUST BE 0.75" x 0.065" SS 316.
2. CONNECTIONS A1, B1, A2 AND B2 ARE 37° FLARE-O FITTINGS
3. LOCATE HYDRAULIC POWER UNIT CLOSE TO HYDRAULIC VALVES HCV 015/016
4. NEEDLE VALVES TO BE 3/4" SS 316 RATED MIN. 3000 PSI

0

HOLDS

1. CERTIFIED VENDOR DRAWING (SMO).

0

EQUIPMENT ON THIS DRAWING

EQUIP. NO.	DESCRIPTION	STATUS
CP-5828001	HYDRAULIC POWER UNIT	NEW

ISSUED FOR CONSTRUCTION

DESTROY PREVIOUS PRINTS

AGRA Monenco
CALGARY
ISSUE
OCT 26 2000

CAD FILE NAME: 1006106

LAST UPDATE: 00/10/26

REV.	REVISION DESCRIPTION	DATE	DRAWN BY	DESIGNED BY	DWG. CHECK	DESIGN CHECK	LEAD ENG./ DEPT. MGR.	P. ENG./ PROJ. MGR.	NO.	DWG. NO.	REFERENCE DRAWINGS
									8		
									7		
									6		
									5		
0	ISSUED FOR CONSTRUCTION	00/10/26	PRC	RR	SSK	SSK			4	47WAG-168429-0-E	120L/15HP-HPU c/w ENCLOSURE GENERAL ASSEMBLY (BASIC TECHNOLOGIES)
D	REFORMATED AND ISSUED FOR APPROVAL	00/05/29	AB	RAJM	SSK	RR			3	HS47-A1-168429-D	120L/15HP-HPU c/w ENCLOSURE HYDRAULIC SCHEMATIC (BASIC TECHNOLOGIES)
C	FOR APPROVAL - GENERAL REVISION BY CLIENT	00/02/17	RPL						2	26-10-102	1325 TPD PHOS ACID REACTOR P & ID
B	FOR APPROVAL - TWO SYSTEMS	00/02/18	APH						1	09-10-100	STANDARD P&ID SYMBOLS
A	FOR APPROVAL	00/02/08	JKC	APH	NRG						

ENGINEERING REVIEW

P. ENG./ PROJ. MGR.		
LEAD ENG./ DEPT. MGR.		
DESIGN CHECK	KEMWORKS	00/02/17
DWG. CHECK	NRG	00/02/09
DESIGNED BY	APH	00/01/27
DRAWN BY	JKC	00/02/07

THIS DRAWING, THE KNOW-HOW AND INFORMATION DISCLOSED HEREIN ARE THE PROPERTY OF KEMWORKS TECHNOLOGY, INC. AND AGRA MONENCO INC. THIS DRAWING MAY NOT BE USED, COPIED OR DISCLOSED EXCEPT AS APPROVED BY KEMWORKS TECHNOLOGY, INC AND AGRA MONENCO INC. UPON DEMAND BY EITHER PARTY, THIS DRAWING AND ALL COPIES HEREOF SHALL BE RETURNED IMMEDIATELY

KEMWORKS TECHNOLOGY, INC.
2000 IMPERIAL PARKWAY, SUITE 100
MULBERRY, FLORIDA USA
(863) 646-2300 FAX (863) 647-2218
www.kemworks.com

CLIENT APPROVAL
BY DATE
DRH 00/05/31

AGRA MONENCO INC. NO.
Y600D-100-6-106
PROJECT NO. Y600D
SCALE NONE

NU-WEST INDUSTRIES INC.
3010 CONDA ROAD SODA SPRINGS, ID 83276

AGRA Monenco
ENGINEERING GLOBAL SOLUTIONS

CPO EXPANSION PROJECT
HYDRAULIC SYSTEM
P&ID

DRAWING NO. 26-10-119
REV. 0

AGR-CBI_003879
SUBJECT TO ALL APPLICABLE CONFIDENTIAL BUSINESS INFORMATION PRIVILEGES

EXHIBIT B

EQUIP. NO.	DESCRIPTION	STATUS
CP-1626002	SPA SCRUBBER STACK	NEW
CP-2126004	SPA SCRUBBER FAN	NEW
CP-4126073	SPA RETURN WATER PUMP	NEW
CP-4126074	SPA SCRUBBER SPRAY PUMP	NEW
CP-4526002	SPA SCRUBBER	NEW
CP-5126054	SPA SCRUBBER SPRAY TANK	NEW
CP-5126055	SPA SCRUBBER TANK	NEW

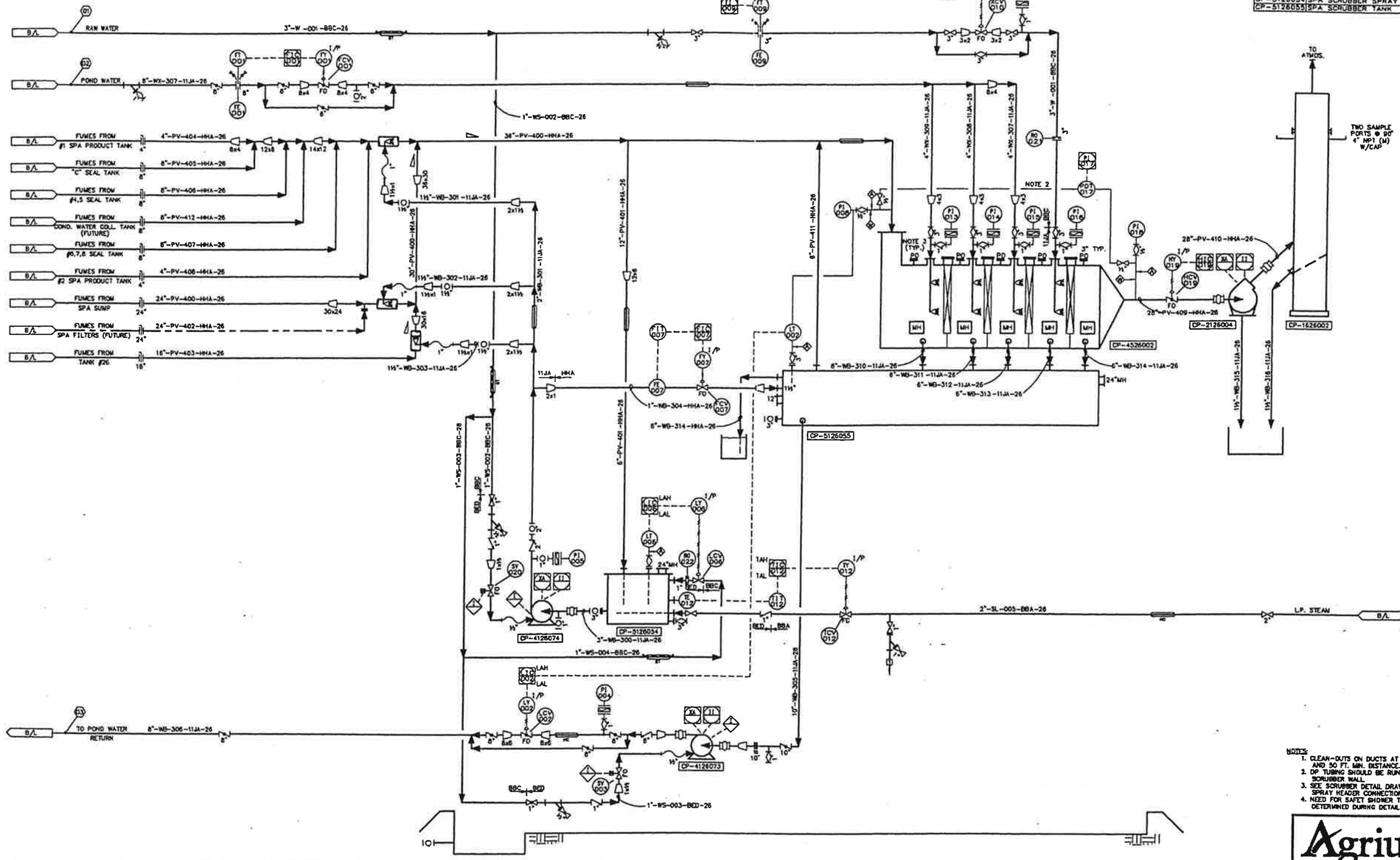

NOTES:
1. CLEAN-OUTS ON DUCTS AT ELBOWS AND 50 FT. MIN. DISTANCE.
2. DP TUBING SHOULD BE RUN NEXT TO SCRUBBER WALL.
3. SEE SCRUBBER DETAIL DRAWING FOR SPRAY HEADER CONNECTION DETAILS.
4. NEED FOR SAFET SHOWER TO BE DETERMINED DURING DETAIL ENGINEERING.

REFERENCE DRAWINGS	REFERENCE DRAWINGS	REV.	REVISION	DATE	BY

DRAWING HISTORY	DATE	REV.
FOR REVIEW & COMMENT	02 AUG 99	A
FOR REVIEW & COMMENT	10 AUG 99	B

SCALE: NONE		DATE
DES. BY	NRG	02 JUL 99
DRWN. BY	JKC	06 JUL 99
CHKD. BY	SMN	30 JUL 99
APPD. BY		

KEMWORKS TECHNOLOGY, INC.
5025 IMPERIAL PARKWAY, SUITE 106
MULBERRY, FLORIDA USA
(941) 648-8388 FAX (941) 647-8219
www.kemworks.com

Agrium

AGRIUM U.S., INC.
POCATELLO, IDAHO
SPA
KEMWORKS SCRUBBER P&ID

PROJ. MGR.	CLIENT	PROJ. NO.	DWG. NO.	REV.
NRG	AGRIUM	1310	26-10-120	B

EXHIBIT B

AGR-CBI_003880
SUBJECT TO ALL APPLICABLE CONFIDENTIAL BUSINESS INFORMATION PRIVILEGES

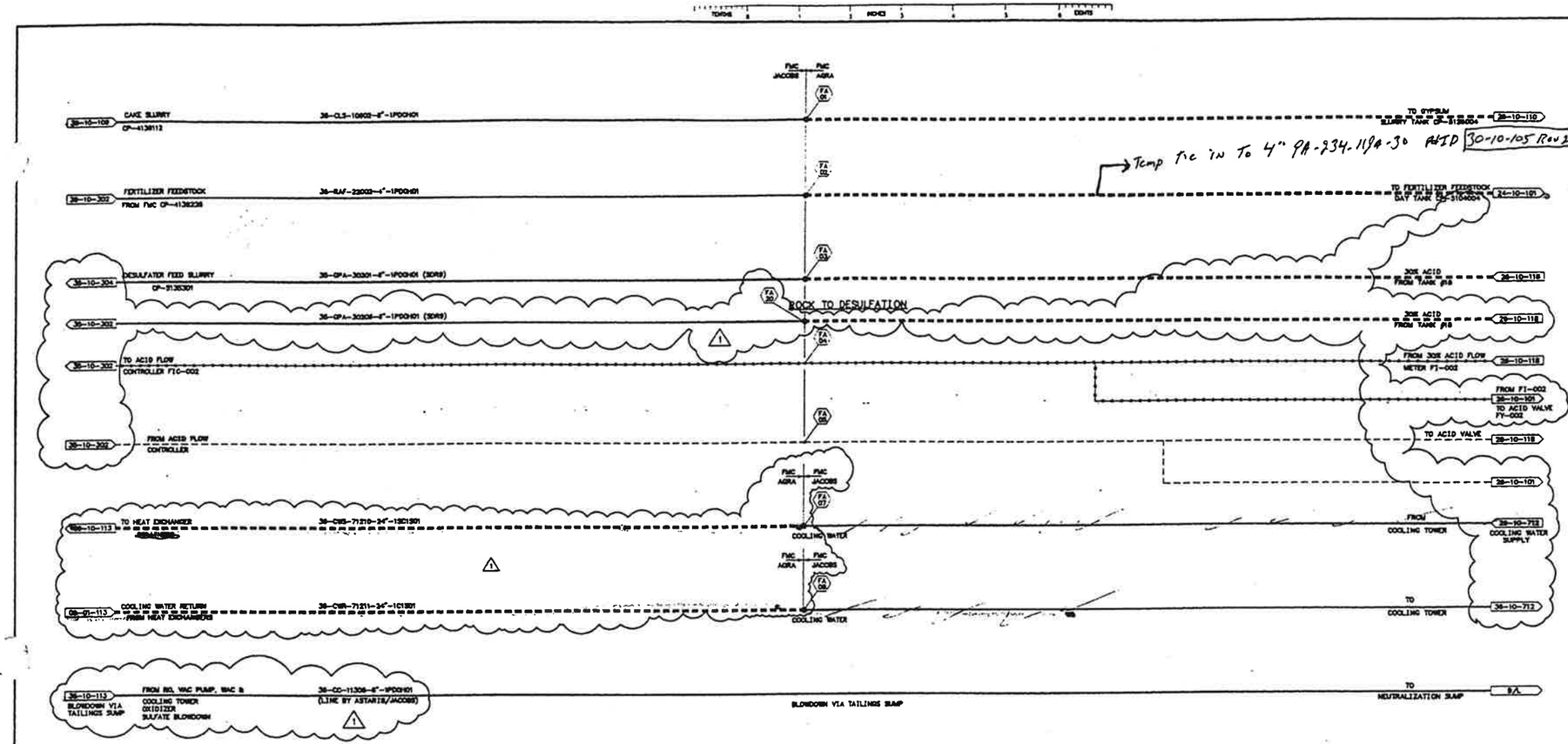

GENERAL NOTES

1. KEMWORKS ISSUED REV. C WITH P.E. STAMP. EFFECTIVE MARCH 24th, 2000, THIS DRAWING IS BEING MAINTAINED BY AGR.
2. FOR FMC GENERAL NOTES AND SYMBOLS REFER TO DRAWINGS # 30-10-080 AND # 30-10-088.

HOLDS

AMEC May 1
Merit May 1
Merit AFTER MAY 1

EQUIPMENT ON THIS DRAWING

WORK IN PROGRESS
DRAWING BETWEEN REVISIONS

ISSUED FOR CONSTRUCTION

DESTROY PREVIOUS PRINTS

AGRA Monenco
CALGARY
ISSUE
FEB 26 2001

LEGEND:
- - - - - - INSTALLED COST BY FMC
- - - - - - ENGINEERING DESIGN AND CONSTRUCTION BY AMI

REV.	REVISION DESCRIPTION	DATE	DRAWN BY	DESIGNED BY	ENG. CHECK	DESIGN CHECK	LEAD ENG./ DEPT. MGR.	P. ENG./ PROJ. MGR.
	REVISED AS NOTED RE-ISSUED FOR CONSTRUCTION	01/02/28	TDV					
	ISSUED FOR CONSTRUCTION	00/08/30	AB	RAJM	SSK	RR		
	ISSUED FOR TIE-IN REVIEW	00/03/28	AB	RAJM	RR			
C	ISSUED FOR DESIGN	00/02/18	RPL					
B	FOR APPROVAL	00/02/08						
A	ISSUED FOR APPROVAL	00/01/28						

REV.	DWG. NO.	REFERENCE DRAWINGS
8		
7	35-10-088/089	FMC PIPING AND INSTR. SYMBOLS AND NOMENCLATURE P&ID's
6	35-10-102	FMC PURIFIED PHOSPHORIC ACID PLANT
5	26-10-118	SOE P205 STORAGE TANK #18
4	26-10-110	PHOS ACID GYPSUM SLURRY TANK
3	24-10-101	DAP PLANT PIPE REACTOR
2	09-10-108	FRESHWATER
1	08-10-101	STEAM AND CONDENSATE UFD

ENGINEERING BENCH		
P. ENG./ PROJ. MGR.		
LEAD ENG./ DEPT. MGR.		
DESIGN CHECK	KEMWORKS	00/02/18
ENG. CHECK	MRG	00/02/08
DESIGNED BY	APH	00/01/25
DRAWN BY	WRC	00/01/25

THIS DRAWING, THE KNOWLEDGE AND INFORMATION DISCLOSED HEREON ARE THE PROPERTY OF KEMWORKS TECHNOLOGY, INC AND AGRA MONENCO INC. THIS DRAWING MAY NOT BE USED, COPIED OR DISCLOSED EXCEPT AS APPROVED BY KEMWORKS TECHNOLOGY, INC AND AGRA MONENCO INC. UPON DEMAND BY EITHER PARTY, THIS DRAWING AND ALL COPIES HEREOF SHALL BE RETURNED IMMEDIATELY

KEMWORKS TECHNOLOGY, INC.
[illegible] PARKWAY, SUITE 450
[illegible], PENNSYLVANIA USA
(610) 640-0800 FAX (610) 647-8210
www.kemworks.com

CLIENT APPROVAL
BY DATE
CRH 00/08/02

AGRA MONENCO DWG. NO. Y600D-900-6-120
PROJECT NO. Y600D
SCALE NONE

NU-WEST INDUSTRIES INC.
3010 CONDA ROAD SODA SPRINGS, ID 83276

AGRA Monenco
EMPOWERING GLOBAL SOLUTIONS

CPO EXPANSION PROJECT
AGRIUM / FMC TIE-IN POINTS
P&ID

DRAWING NO. 26-10-120
REV. 1

LAST UPDATE: 01/03/27 @ 7:am
CAD FILE NAME: G:\Y600D\CAD\PIP\PHOS\AGRIUM\26101201.dwg

EXHIBIT B

AGR-CBI_003881
SUBJECT TO ALL APPLICABLE CONFIDENTIAL BUSINESS INFORMATION PRIVILEGES

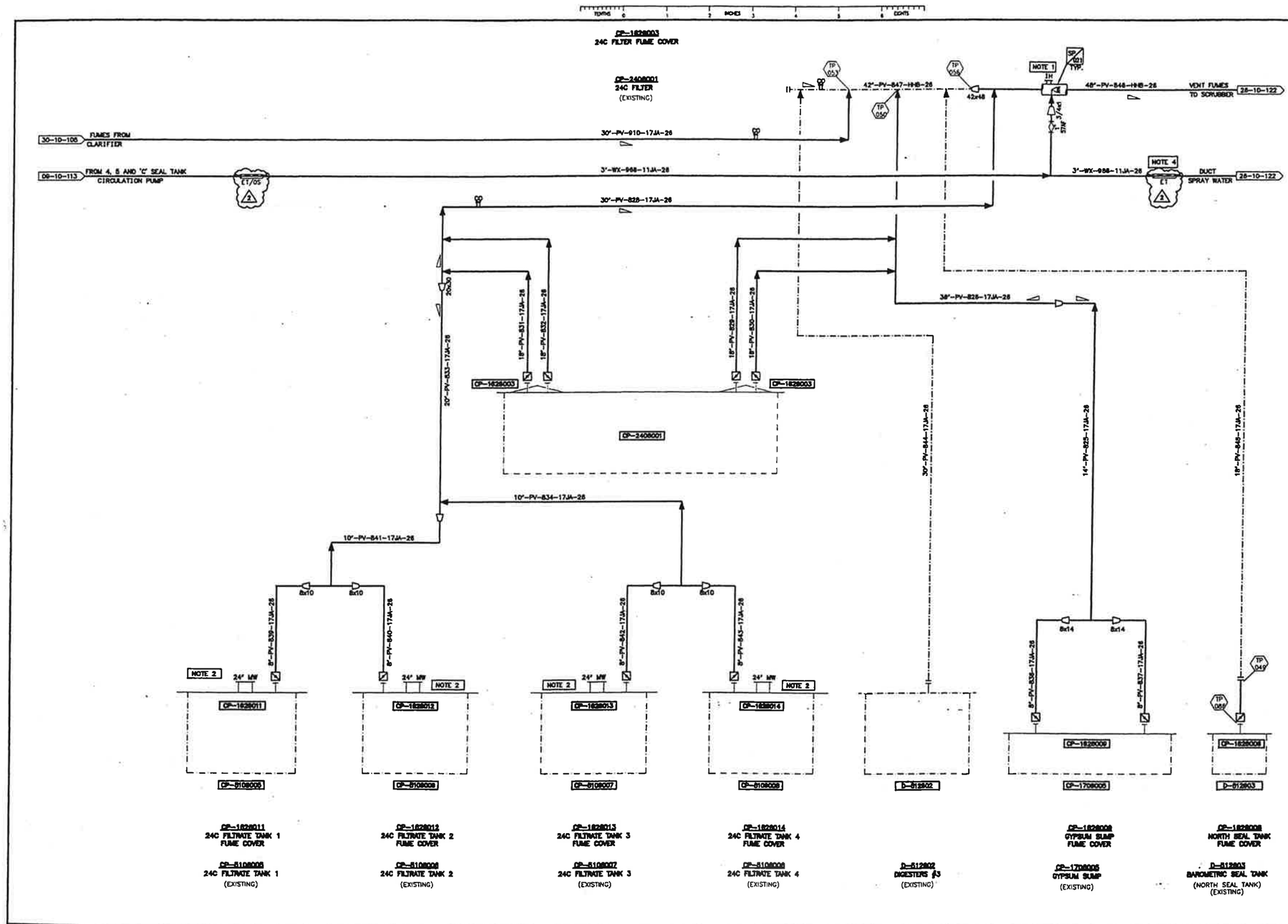

GENERAL NOTES

1. SPRAY WASH TYPICAL EVERY 10 FT. USE BETE WT RIGHT ANGLE HOLLOW CONE SPRAY NOZZLES MODEL 3/4" WT 2000, 80°, TEFLON FOR 10 GPM @ 10 PSIG.
2. OPENINGS IN TANK COVER TO ACCOMODATE ENTRY OF EXISTING PIPING TO BE MADE IN FIELD BY NU-WEST.
3. LATERAL CONNECTIONS SHALL BE USED ON DUCTING WHEREVER POSSIBLE (IN DIRECTION OF FLOW).
4. PROVIDE INSULATION ONLY WHEN LINE IS OUTSIDE OF BUILDINGS.

HOLDS

EQUIPMENT ON THIS DRAWING

EQUIP. NO.	DESCRIPTION	STATUS
CP-1628003	24C FILTER FUME COVER	NEW
CP-1628008	NORTH SEAL TANK FUME COVER	NEW
CP-1628009	GYPSUM SUMP FUME COVER	NEW
CP-1628011	24C FILTRATE TANK 1 FUME COVER	NEW
CP-1628012	24C FILTRATE TANK 2 FUME COVER	NEW
CP-1628013	24C FILTRATE TANK 3 FUME COVER	NEW
CP-1628014	24C FILTRATE TANK 4 FUME COVER	NEW
CP-1708005	GYPSUM SUMP	EXIST
CP-2408001	24C FILTER	EXIST
CP-5108005	FILTRATE TANK 1	EXIST
CP-5108006	FILTRATE TANK 2	EXIST
CP-5108007	FILTRATE TANK 3	EXIST
CP-5108008	FILTRATE TANK 4	EXIST
D-512802	DIGESTER #3	EXIST
D-512803	BAROMETRIC SEAL TANK	EXIST

ISSUED FOR CONSTRUCTION

DESTROY PREVIOUS PRINTS

AGRA Monenco
CALGARY
ISSUE
FEB 26 2001

NU-WEST INDUSTRIES INC.
3010 CONDA ROAD SODA SPRINGS, ID 83276

AGRA Monenco
ENGINEERING GLOBAL SOLUTIONS

CPO EXPANSION PROJECT
P&ID PHASE 2
VENTILATION DUCTING
SHEET 1

REV.	REVISION DESCRIPTION	DATE	DRAWN BY	DESIGNED BY	DWG. CHECK	DESIGN CHECK	LEAD ENG./ DEPT. MGR.	P. ENG./ PROJ. MGR.
2	ADDED ET/05	01/02/26	TDV					
1	SP ITEMS REMOVED, OTHER REVISIONS AS NOTED, RE-ISSUED FOR CONSTRUCTION	00/12/08	PRC	SSK	RAJM	RR	RR	LAF
0	ISSUED FOR CONSTRUCTION	00/05/31	AB	SSK	RAJM	RR		
B	GENERAL REVISIONS	00/04/27	AB	SSK	RAJM	RR		
A	ISSUED FOR TIE-IN REVIEW	00/03/28	RK	SSK	RAJM	RR		

NO.	DWG. NO.	REFERENCE DRAWINGS
6		
7		
8		
5		
4	26-10-122	PHASE 2 VENTILATION DUCTING SHEET 2
3	26-10-115	PHOS ACID GRADE CONTROL
2	09-10-113	CLOSED LOOP COOLING WATER - INTERCONDENSERS
1	09-10-100	STANDARD P&ID SYMBOLS

ENGINEERING REVIEW		
P. ENG./ PROJ. MGR.	LAF	00/06/01
LEAD ENG./ DEPT. MGR.	RR	00/06/01
DESIGN CHECK	RR	00/03/20
DWG. CHECK	RAJM	00/03/28
DESIGNED BY	SSK	00/03/20
DRAWN BY	RK	00/02/15

THIS DRAWING IS THE PROPERTY OF AGRA MONENCO INC. AND HAS BEEN RELEASED FOR CONFIDENTIAL USE ONLY. IT IS NOT TO BE COMMUNICATED OR DISCLOSED TO OTHERS OR TO BE COPIED IN WHOLE OR IN ANY PART EXCEPT WITH THE PRIOR WRITTEN PERMISSION OF AGRA MONENCO INC.

CLIENT APPROVAL BY DATE

AGRA MONENCO DWG. NO. Y600D-400-6-101

PROJECT NO. Y600D

SCALE NTS

DRAWING NO. 26-10-121

REV. 2

CAD FILE NAME: G:\Y600D\CAD\PIP\PRC\AGRAP&ID\4006101.dwg

LAST UPDATE: 01/03/22 8:30am

EXHIBIT B

AGR-CBI_003882
SUBJECT TO ALL APPLICABLE CONFIDENTIAL BUSINESS INFORMATION PRIVILEGES