NORTH END
P&ID's

AGR-CBI_003851
SUBJECT TO ALL APPLICABLE CONFIDENTIAL
BUSINESS INFORMATION PRIVILEGES

TABLE 1

CONNECTION SCHEDULE

MARK	SERVICE	TYPE	BY	MARK	SERVICE	TYPE	BY
1	LUBE OIL	¾" NPT (F)	FFE	30	PLANT AIR	1" NPT (M)	CONTRACTOR
2	LUBE OIL	¾" NPT (M)	CONTRACTOR	31	PLANT AIR	1 1/4"NPT(F)	FFE
3	LUBE OIL	¾" NPT (F)	FFE	32	PLANT AIR	1 1/4"NPT(M)	CONTRACTOR
4	LUBE OIL	¾" NPT (M)	CONTRACTOR	33	PLANT AIR	1 1/4"NPT(F)	FFE
5	LUBE OIL	¾" NPT (F)	FFE	34	PLANT AIR	1 1/4"NPT(M)	CONTRACTOR
6	LUBE OIL	¾" NPT (M)	CONTRACTOR	35	PLANT AIR	½" NPT (F)	FFE
7	LUBE OIL	¾" NPT (F)	FFE	36	PLANT AIR	½" NPT (M)	CONTRACTOR
8	LUBE OIL	¾" NPT (M)	CONTRACTOR	37	PLANT AIR	½" NPT (F)	FFE
9	LUBE OIL	2" NPT (F)	FFE	38	PLANT AIR	½" NPT (M)	CONTRACTOR
10	LUBE OIL	2" NPT (M)	CONTRACTOR	39	~~PLANT AIR~~		~~FFE~~
11	PLANT AIR	½" NPT (F)	FFE	40	~~PLANT AIR~~		~~CONTRACTOR~~
12	PLANT AIR	½" NPT (M)	CONTRACTOR	41	PLANT AIR	½" NPT (F)	FFE
13	LUBE OIL	¾" NPT (F)	FFE	42	PLANT AIR	½" NPT (M)	CONTRACTOR
14	LUBE OIL	¾" NPT (M)	CONTRACTOR	43	~~PLANT AIR~~		~~FFE~~
15	LUBE OIL	¾" NPT (F)	FFE	44	~~PLANT AIR~~		~~CONTRACTOR~~
16	LUBE OIL	¾" NPT (M)	CONTRACTOR	45	GREASE	½" NPT (F)	FFE
17	~~LUBE OIL~~	~~¾" NPT (F)~~	~~FFE~~	46	GREASE	½" NPT (M)	CONTRACTOR
18	~~LUBE OIL~~	~~¾" NPT (M)~~	~~CONTRACTOR~~	47	GREASE	½" NPT (F)	FFE
19	LUBE OIL	¾" NPT (F)	FFE	48	GREASE	½" NPT (M)	CONTRACTOR
20	LUBE OIL	¾" NPT (M)	CONTRACTOR	49	PLANT AIR	½" NPT (F)	FFE
21	LUBE OIL	¾" NPT (F)	FFE	50	PLANT AIR	½" NPT (M)	CONTRACTOR
22	LUBE OIL	¾" NPT (M)	CONTRACTOR	51	~~GREASE/PLANT AIR~~		~~FFE~~
23	LUBE OIL	¾" NPT (F)	FFE	52	~~GREASE/PLANT AIR~~		~~CONTRACTOR~~
24	LUBE OIL	¾" NPT (M)	CONTRACTOR	53	~~GREASE/PLANT AIR~~		~~FFE~~
25	~~LUBE OIL~~	~~¾" NPT (F)~~	~~FFE~~	54	~~GREASE/PLANT AIR~~		~~CONTRACTOR~~
26	~~LUBE OIL~~	~~¾" NPT (M)~~	~~CONTRACTOR~~	55	COOLING WATER	1" NPT (F)	FFE
27	LUBE OIL	¾" NPT (F)	FFE	56	COOLING WATER	1" NPT (M)	CONTRACTOR
28	LUBE OIL	¾" NPT (M)	CONTRACTOR	57	COOLING WATER	1" NPT (F)	FFE
29	PLANT AIR	1" NPT (F)	FFE	58	COOLING WATER	1" NPT (M)	CONTRACTOR
				59	PLANT AIR		FFE
				60	PLANT AIR		CONTRACTOR

HOLD 6

TABLE 2

TAG #	DESCRIPTION OF SIGNAL BETWEEN MILL AND DCS
22-JT -100A/103	MILL #1 MAIN MOTOR POWER
22-PSH -122 /103	MILL #1 CLUTCH PRESSURE HIGH
22-TC -175 /103	MILL #1 HEAT EXCHANGER FAN RUN
22-TT -100A/103	MILL #1 FEED END BRG
22-TT -100B/103	MILL #1 FEED END BRG
22-TT -100C/103	MILL #1 MAIN MOTOR STATOR
22-TT -100D/103	MILL #1 MAIN MOTOR THERM CAP
22-TT -101A/103	MILL #1 DISCH END BRG
22-TT -101B/103	MILL #1 DISCH END BRG
22-TT -102A/103	MILL #1 O/B PINION BRG
22-TT -102B/103	MILL #1 I/B PINION BRG
22-TT -175 /103	MILL #1 HEAT EXCHANGER OIL TEMP
22-UT -100 /103	MILL #1 STATOR TEMPERATURE AVG
22-XS -100 /103	MILL #1 GROUND FAULT
22-XS -153 /103	MILL #1 GEAR LUBE FAULT
22-YC -100A/103	MILL #1 MAIN MOTOR REMOTE START
22-YC -100B/103	MILL #1 MAIN MOTOR REMOTE STOP
22-YC -100C/103	MILL #1 MAIN MOTOR LOCAL START PERMISSIVE
22-YC -110 /103	MILL #1 REDUCER PUMP REMOTE START
22-YC -125A/103	MILL #1 CLUTCH ENGAGED PERMISSIVE
22-YC -125B/103	MILL #1 CLUTCH ENGAGE ON
22-YC -126 /103	MILL #1 MAIN MOTOR RUNNING
22-YC -127 /103	MILL #1 CLUTCH LOCAL ENABLE
22-YC -150 /103	MILL #1 GREASE LUBE RUN
22-YC -188 /103	MILL #1 REMOTE LUBE RUN
22-YC -189 /103	MILL #1 REMOTE MILL RUN
22-YS -100 /103	MILL #1 MOTOR RUNNING
22-YS -100A/103	MILL #1 MOTOR ON
22-YS -100B/103	MILL #1 MOTOR ON
22-YS -100C/103	MILL #1 CONTROL POWER ON
22-YS -100D/103	MILL #1 EMERGENCY STOP
22-YS -100E/103	MILL #1 TRIP
22-YS -100F/103	MILL #1 ALARM
22-YS -100G/103	MILL #1 IN SERVICE
22-YS -100H/103	MILL #1 BLOCK START
22-YS -110A/103	MILL #1 MAIN REDUCER I/L
22-YS -110B/103	MILL #1 REDUCER COOL PUMP ON
22-YS -126 /103	MILL #1 CLUTCH ENGAGED ON FEED BACK
22-YS -127 /103	MILL #1 CLUTCH READY FEED BACK
22-YS -128 /103	MILL #1 CLUTCH NORMAL MODE SELECTED
22-YS -140 /103	MILL #1 INCHING DRIVE ON
22-YS -160 /103	MILL #1 RESERVOIR HEATER ON
22-YS -170 /103	MILL #1 MILL LP PUMP 1(MAIN) ON
22-YS -171 /103	MILL #1 LP PUMP 2 (STANDBY) ON
22-YS -175 /103	MILL #1 HEAT EXCHANGER FAN ON
22-YS -160 /103	MILL #1 LIFT PUMPS ON
22-YS -191 /103	MILL #1 MILL PERMISSIVE START A
22-YS -192 /103	MILL #1 MILL PERMISSIVE START B

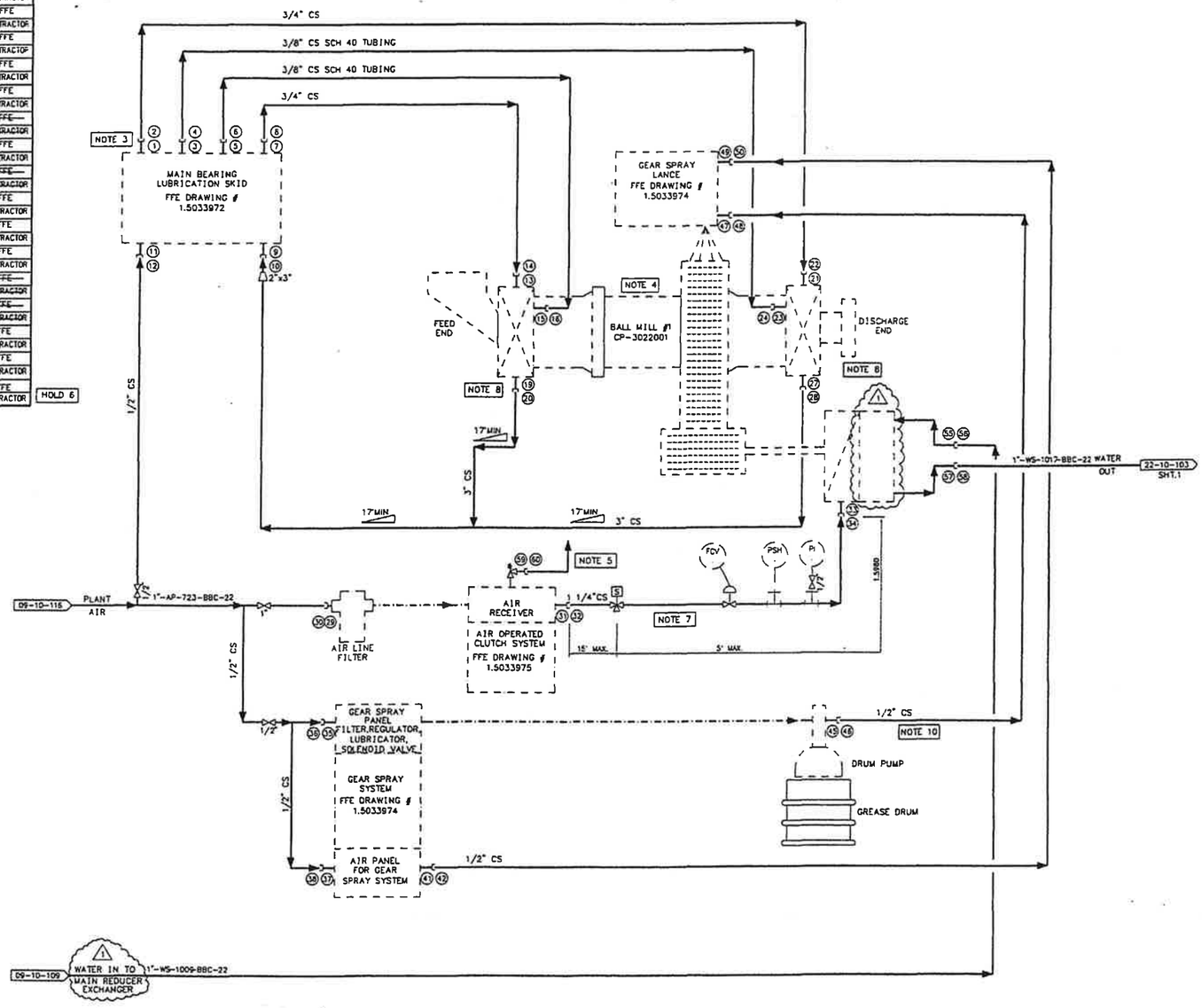

GENERAL NOTES

1. UNLESS OTHERWISE SPECIFIED, ALL ODD NUMBERED CONNECTIONS ARE IN VENDOR (FFE) SCOPE OF SUPPLY.
2. VENDOR TO IDENTIFY ALL OF THEIR CONNECTIONS BY SUITABLE MARKS/TAGS TO FACILITATE INSTALLATION OF PIPING/TUBING IN THE FIELD.
3. REFER TO TABLE 1 FOR CONNECTION DETAILS.
4. REFER TO TABLE 2 FOR LISTING OF SIGNALS BETWEEN MILL AND DCS.
5. VENT TO SAFE LOCATION
6. — — — — — — BY FFE
   ———————— BY CONTRACTOR
7. MIN. ELBOWS IN AIR LINE
8. USE THE DRAIN CONNECTION FACING AWAY FROM THE MILL.
9. UNLESS OTHERWISE NOTED, ALL CS PIPING/TUBING TO FOLLOW BBC SPEC.
10. USE EXTRA HEAVY STEEL FITTINGS IN THIS LINE.
11. CONTRACTOR TO FOLLOW INSTALLATION INSTRUCTIONS DESCRIBED IN OPERATING AND MAINTENANCE MANUALS PROVIDED BY MILL VENDOR (FFE MINERALS INC.) PARTICULAR ATTENTION TO BE PAID TO PICKLING AND PURGING INSTRUCTIONS FOR PIPING.

HOLDS

6. PSV CONNECTION DETAILS (MT)

ISSUED FOR CONSTRUCTION

DESTROY PREVIOUS PRINTS

AGRA Monenco
CALGARY
ISSUE
JAN 10 2001

CAD FILE NAME: 7016105

LAST UPDATE: 01/01/10

REV.	REVISION DESCRIPTION	DATE	DRAWN BY	DESIGNED BY	DWG. CHECK	DESIGN CHECK	LEAD ENG./DPT. MGR.	P. ENG./PROJ. MGR.
1	RE-ISSUED FOR CONSTRUCTION	01/01/10	PRC	RR	SSK			
0	ISSUED FOR CONSTRUCTION	00/09/29	PRC	RR	SSK		RR	LAF
A	ISSUED FOR INFORMATION / COMMENTS	00/08/03	AB	RR	SSK			

NO.	DWG NO.	REFERENCE DRAWINGS	NO.	DWG NO.	REFERENCE DRAWINGS
8	1.503969	CABD LEGEND SHEET 2 (FFE MINERALS)	15		
7	1.503968	CABD LEGEND SHEET 1 (FFE MINERALS)	14	1.503975	CABD BALL MILL AIR OPERATED CLUTCH SYSTEM (FFE MINERALS)
6	8.500416	I/O SIGNAL LIST (FFE MINERALS)	13	1.503974	CABD BALL MILL GEAR SPRAY SYSTEM (FFE MINERALS)
5	M91275	P&ID OF LIFT & LUBE SYSTEM (SHEETS 1 AND 2) HOWARD MARTIN CO. LTD.			
4	09-10-116	PLANT AIR UTILITY P&ID	12	1.503973	CABD BALL MILL MONALIE JACKING SYSTEM (FFE MINERALS)
3	09-10-109	RECLAIM WATER UTILITY P&ID	11	1.503972	CABD BALL MILL MAIN BEARING LUBRICATION SYSTEM (FFE MINERALS)
2	09-10-103	SHT.2 ROCK GRINDING MILL #1 P&ID	10	1.503971	CABD BALL MILL OVERVIEW (FFE MINERALS)
1	09-10-100	STANDARD P&ID SYMBOLS	9	1.503970	CABD LEGEND SHEET 3 (FFE MINERALS)

ENGINEERING REVIEW

P. ENG./PROJ. MGR.	LAF	00/09/29
LEAD ENG./DPT. MGR.	RR	00/09/29
DESIGN CHECK		
DWG. CHECK	SSK	00/09/29
DESIGNED BY	RR	00/07/31
DRAWN BY	AB	00/08/01

THIS DRAWING IS THE PROPERTY OF AGRA MONENCO INC. AND HAS BEEN RELEASED FOR CONFIDENTIAL USE ONLY. IT IS NOT TO BE COMMUNICATED OR DISCLOSED TO OTHERS OR TO BE COPIED IN WHOLE OR IN ANY PART EXCEPT WITH THE PRIOR WRITTEN PERMISSION OF AGRA MONENCO INC.

CLIENT APPROVAL BY DATE

AGRA MONENCO DWG. NO. Y600D-701-6-105

PROJECT NO. Y600D

SCALE NTS

NU-WEST INDUSTRIES INC.
3010 CONDA ROAD 500A SPRINGS, ID 83276

AGRA Monenco
ENGINEERING GLOBAL SOLUTIONS

CPO EXPANSION PROJECT
ROCK GRINDING
MILL #1 P&ID
SHEET 2 OF 2

DRAWING NO. 22-10-103

REV. 1

EXHIBIT B

AGR-CBI_003852
SUBJECT TO ALL APPLICABLE CONFIDENTIAL BUSINESS INFORMATION PRIVILEGES

TABLE 1
CONNECTION SCHEDULE

MARK	SERVICE	TYPE	BY	MARK	SERVICE	TYPE	BY
1	LUBE OIL	¾" NPT (F)	FFE	32	PLANT AIR	1"NPT(M)	CONTRACTOR
2	LUBE OIL	¾" NPT (M)	CONTRACTOR	33	PLANT AIR	1 1/4"NPT(F)	FFE
3	LUBE OIL	¾" NPT (F)	FFE	34	PLANT AIR	1 1/4"NPT(M)	CONTRACTOR
4	LUBE OIL	¾" NPT (M)	CONTRACTOR	35	PLANT AIR	1 1/4"NPT(F)	FFE
5	LUBE OIL	¾" NPT (F)	FFE	36	PLANT AIR	1 1/4"NPT(M)	CONTRACTOR
6	LUBE OIL	¾" NPT (M)	CONTRACTOR	37	PLANT AIR	1/2"NPT(F)	FFE
7	LUBE OIL	¾" NPT (F)	FFE	38	PLANT AIR	1/2"NPT(M)	CONTRACTOR
8	LUBE OIL	¾" NPT (M)	CONTRACTOR	39	PLANT AIR	1/2"NPT(F)	FFE
9	LUBE OIL	2" NPT (F)	FFE	40	PLANT AIR	1/2"NPT(M)	CONTRACTOR
10	LUBE OIL	2" NPT (M)	CONTRACTOR	41	~~PLANT AIR~~		~~FFE~~
11	PLANT AIR	½" NPT (F)	FFE	42	~~PLANT AIR~~		~~CONTRACTOR~~
12	PLANT AIR	½" NPT (M)	CONTRACTOR	43	PLANT AIR	1/2"NPT(F)	FFE
13	LUBE OIL	¾" NPT (F)	FFE	44	PLANT AIR	1/2"NPT(M)	CONTRACTOR
14	LUBE OIL	¾" NPT (M)	CONTRACTOR	45	~~PLANT AIR~~		~~FFE~~
15	LUBE OIL	¾" BUSHING	FFE	46	~~PLANT AIR~~		~~CONTRACTOR~~
16	LUBE OIL	¾" NPT (M)	CONTRACTOR	47	GREASE	1/2"NPT(F)	FFE
17	~~LUBE OIL~~	~~¾" NPT (F)~~	~~FFE~~	48	GREASE	1/2"NPT(M)	CONTRACTOR
18	~~LUBE OIL~~	~~¾" NPT (M)~~	~~CONTRACTOR~~	49	GREASE	1/2"NPT(F)	FFE
19	LUBE OIL	2" NPT (F)	FFE	50	GREASE	1/2"NPT(M)	CONTRACTOR
20	LUBE OIL	2" NPT (M)	CONTRACTOR	51	PLANT AIR	1/2"NPT(F)	FFE
21	LUBE OIL	¾" NPT (F)	FFE	52	PLANT AIR	1/2"NPT(M)	CONTRACTOR
22	LUBE OIL	¾" NPT (M)	CONTRACTOR	53	~~GREASE/PLANT AIR~~		~~FFE~~
23	LUBE OIL	¾" BUSHING	FFE	54	~~GREASE/PLANT AIR~~		~~CONTRACTOR~~
24	LUBE OIL	¾" NPT (M)	CONTRACTOR	55	~~GREASE/PLANT AIR~~		~~FFE~~
25	~~LUBE OIL~~	~~¾" NPT (F)~~	~~FFE~~	56	~~GREASE/PLANT AIR~~		~~CONTRACTOR~~
26	~~LUBE OIL~~	~~¾" NPT (M)~~	~~CONTRACTOR~~	57	COOLING WATER	1"NPT(F)	FFE
27	LUBE OIL	2" NPT (F)	FFE	58	COOLING WATER	1"NPT(M)	CONTRACTOR
28	LUBE OIL	2" NPT (M)	CONTRACTOR	59	COOLING WATER	1"NPT(F)	FFE
29	PLANT AIR		FFE	60	COOLING WATER	1"NPT(M)	CONTRACTOR
				61	PLANT AIR		FFE
				62	PLANT AIR		CONTRACTOR

HOLD 5

TABLE 2

TAG #	DESCRIPTION OF SIGNAL BETWEEN MILL AND DCS
22-JT -200A/104	MILL #2 MAIN MOTOR POWER
22-PSH -222 /104	MILL #2 CLUTCH PRESSURE HIGH
22-TC -275 /104	MILL #2 HEAT EXCHANGER FAN RUN
22-TT -200A/104	MILL #2 FEED END BRG
22-TT -200B/104	MILL #2 FEED END BRG
22-TT -200C/104	MILL #2 MAIN MOTOR STATOR
22-TT -200D/104	MILL #2 MAIN MOTOR THERM CAP
22-TT -201A/104	MILL #2 DISCH END BRG
22-TT -201B/104	MILL #2 DISCH END BRG
22-TT -202A/104	MILL #2 O/B PINION BRG
22-TT -202B/104	MILL #2 I/B PINION BRG
22-TT -275 /104	MILL #2 HEAT EXCHANGER OIL TEMP
22-UT -200 /104	MILL #2 STATOR TEMPERATURE AVG
22-XS -200 /104	MILL #2 GROUND FAULT
22-XS -253 /104	MILL #2 GEAR LUBE FAULT
22-YC -200A/104	MILL #2 MAIN MOTOR REMOTE START
22-YC -200B/104	MILL #2 MAIN MOTOR REMOTE STOP
22-YC -200C/104	MILL #2 MAIN MOTOR PERMISSIVE
22-YC -210 /104	MILL #2 REDUCER PUMP REMOTE START
22-YC -225A/104	MILL #2 CLUTCH ENGAGE PERMISSIVE
22-YC -225B/104	MILL #2 CLUTCH ENGAGE ON
22-YC -226 /104	MILL #2 MAIN MOTOR RUNNING
22-YC -227 /104	MILL #2 CLUTCH LOCAL ENABLE
22-YC -250 /104	MILL #2 GREASE LUBE RUN
22-YC -288 /104	MILL #2 REMOTE LUBE RUN
22-YC -289 /104	MILL #2 REMOTE MILL RUN
22-YS -200 /104	MILL #2 MOTOR RUNNING
22-YS -200A/104	MILL #2 MOTOR ON
22-YS -200B/104	MILL #2 MOTOR ON
22-YS -200C/104	MILL #2 CONTROL POWER ON
22-YS -200D/104	MILL #2 EMERGENCY STOP
22-YS -200E/104	MILL #2 TRIP
22-YS -200F/104	MILL #2 ALARM
22-YS -200G/104	MILL #2 IN SERVICE
22-YS -200H/104	MILL #2 BLOCK START
22-YS -210A/104	MILL #2 MAIN REDUCER I/L
22-YS -210B/104	MILL #2 REDUCER COOL PUMP ON
22-YS -226 /104	MILL #2 CLUTCH ENGAGED ON FEED BACK
22-YS -227 /104	MILL #2 CLUTCH READY FEED BACK
22-YS -228 /104	MILL #2 CLUTCH NORMAL MODE SELECTED
22-YS -240 /104	MILL #2 INCHING DRIVE ON
22-YS -260 /104	MILL #2 RESERVOIR HEATER ON
22-YS -270 /104	MILL #2 LP PUMP 1 (MAIN) ON
22-YS -271 /104	MILL #2 LP PUMP 2 (STANDBY) ON
22-YS -275 /104	MILL #2 HEAT EXCHANGER FAN ON
22-YS -280 /104	MILL #2 LIFT PUMPS ON
22-YS -291 /104	MILL #2 MILL PERMISSIVE START A
22-YS -292 /104	MILL #2 MILL PERMISSIVE START B

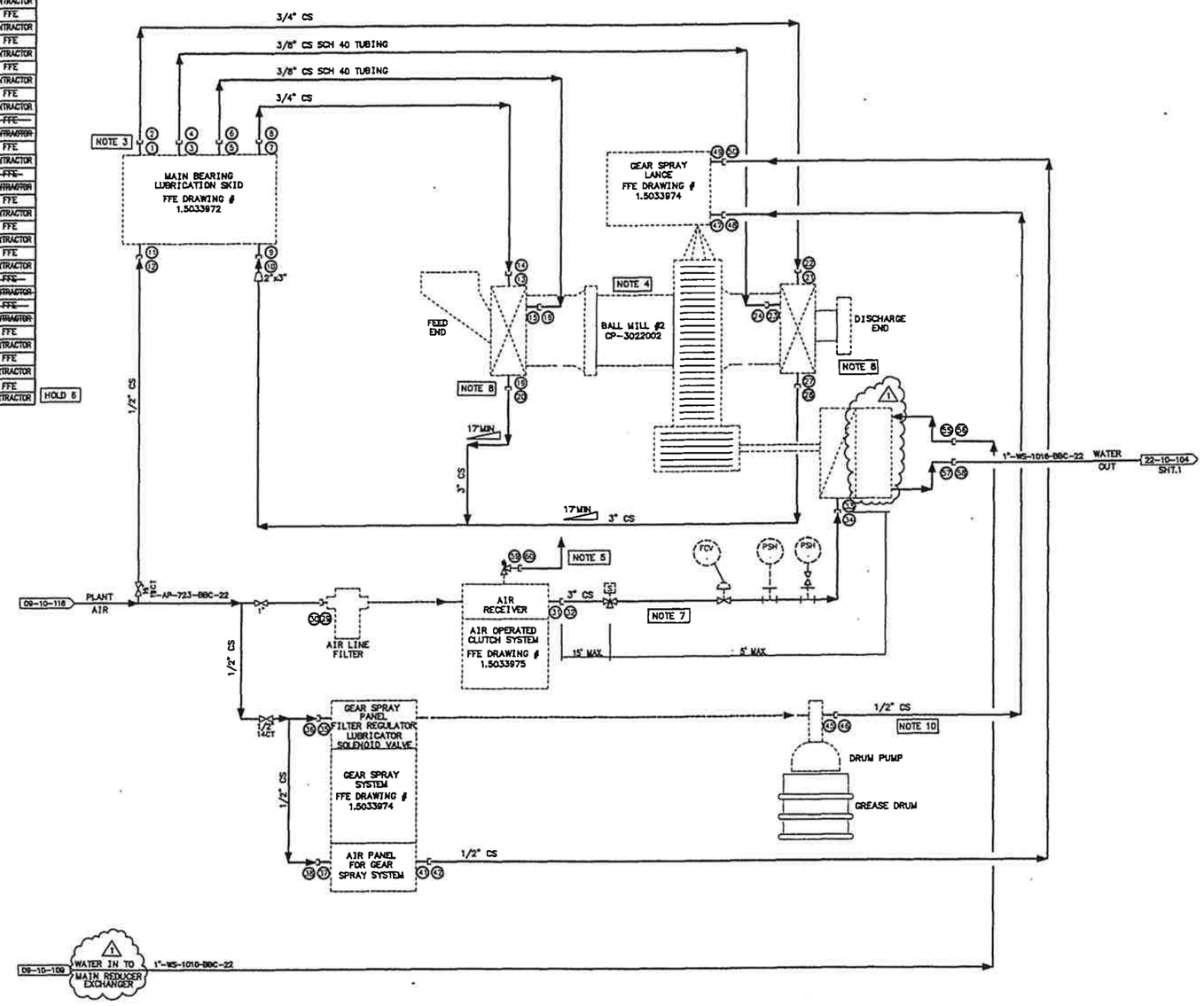

GENERAL NOTES

1. UNLESS OTHERWISE SPECIFIED, ALL 000 NUMBERED CONNECTIONS ARE IN VENDOR (FFE) SCOPE OF SUPPLY.
2. VENDOR TO IDENTIFY ALL OF THEIR CONNECTIONS BY SUITABLE MARKS/DIES TO FACILITATE INSTALLATION OF PIPING/TUBING IN THE FIELD.
3. REFER TO TABLE 1 FOR CONNECTION DETAILS.
4. REFER TO TABLE 2 FOR LISTING OF SIGNALS BETWEEN MILL AND DCS.
5. VENT TO SAFE LOCATION
6. ——————— BY FFE
   ——————— BY CONTRACTOR
7. MIN. ELBOWS IN AIR LINE
8. USE THE DRAIN CONNECTION FACING AWAY FROM THE MILL.
9. UNLESS OTHERWISE NOTED, ALL CS PIPING/TUBING TO FOLLOW BBC SPEC.
10. USE EXTRA HEAVY STEEL FITTINGS IN THIS LINE.
11. CONTRACTOR TO FOLLOW INSTALLATION INSTRUCTIONS DESCRIBED IN OPERATING AND MAINTENANCE MANUALS PROVIDED BY MILL VENDOR (FFE MINERALS INC.) PARTICULAR ATTENTION TO BE PAID TO PICKLING AND PURGING INSTRUCTIONS FOR PIPING.

HOLDS

6. PSV CONNECTION DETAILS (MT)

AGRA Monenco
CALGARY
ISSUE
JAN 10 2001

NU-WEST INDUSTRIES INC.
3010 CONDA ROAD SODA SPRINGS, ID 83276

AGRA Monenco
ENGINEERING GLOBAL SOLUTIONS

CPO EXPANSION PROJECT
ROCK GRINDING
MILL #2 P&ID
SHEET 2 OF 2

AGRA MONENCO DWG. NO. Y600D-701-6-106
PROJECT NO. Y600D
SCALE NTS
DRAWING NO. 22-10-104
REV. 1

REV.	REVISION DESCRIPTION	DATE	DRAWN BY	DESIGNED BY	DWG. CHECK	DESIGN CHECK	LEAD ENG./ DEPT. MGR.	P. ENG./ PROJ. MGR.
1	RE-ISSUED FOR CONSTRUCTION	01/01/10	PRC	RR	SSK			
0	ISSUED FOR CONSTRUCTION	00/09/29	PRC	RR	SSK		RR	LAF
A	ISSUED FOR INFORMATION / COMMENT	00/08/03	AB	RR	SSK			

NO.	DWG. NO.	REFERENCE DRAWINGS
8	1.5033971	CAD BALL MILL OVERVIEW (FFE MINERALS)
7	1.503970	CAD LEGEND SHEET 3 (FFE MINERALS)
6	1.503969	CAD LEGEND SHEET 2 (FFE MINERALS)
5	1.503968	CAD LEGEND SHEET 1 (FFE MINERALS)
4	8.500418	I/O SIGNAL LIST (FFE MINERALS)
3	W81275	P&ID OF LIFT & LUBE SYSTEM (SHEETS 1 AND 2) HOWARD MARTIN CO. LTD
2	22-10-104	SHT. 1, GRINDING MILL #2 P&ID
1	09-10-116	PLANT AIR UTILITY P&ID
13		
14	1.503975	CAD BALL MILL AF OPERATED CLUTCH SYSTEM (FFE MINERALS)
13	1.503974	CAD BALL MILL GEAR SPRAY SYSTEM (FFE MINERALS)
12	1.503972	CAD BALL MILL HYDRAULIC JACKING SYSTEM (FFE MINERALS)
11	1.503973	CAD BALL MILL MAIN BEARING LUBRICATION SYSTEM (FFE MINERALS)
10	09-10-100	STANDARD P&ID SYMBOLS
8	09-10-109	RECLAIM WATER UTILITY P&ID

ENGINEERING REVIEW		
P. ENG./ PROJ. MGR.	LAF	00/09/29
LEAD ENG./ DEPT. MGR.	RR	00/09/29
DESIGN CHECK		
DWG. CHECK	SSK	00/09/29
DESIGNED BY	RR	00/07/31
DRAWN BY	AB	00/08/03

THIS DRAWING IS THE PROPERTY OF AGRA MONENCO INC AND HAS BEEN RELEASED FOR CONFIDENTIAL USE ONLY. IT IS NOT TO BE COMMUNICATED OR DISCLOSED TO OTHERS OR TO BE COPIED IN WHOLE OR IN ANY PART EXCEPT WITH THE PRIOR WRITTEN PERMISSION OF AGRA MONENCO INC.

CLIENT APPROVAL BY DATE

CAD FILE NAME: 7016106
LAST UPDATE: 01/01/10

EXHIBIT B

AGR-CBI_003853
SUBJECT TO ALL APPLICABLE CONFIDENTIAL BUSINESS INFORMATION PRIVILEGES