GRANULATION

& PJID'S

EXHIBIT B

SUBJECT TO ALL APPLICABLE CONFIDENTIAL
BUSINESS INFORMATION PRIVILEGES

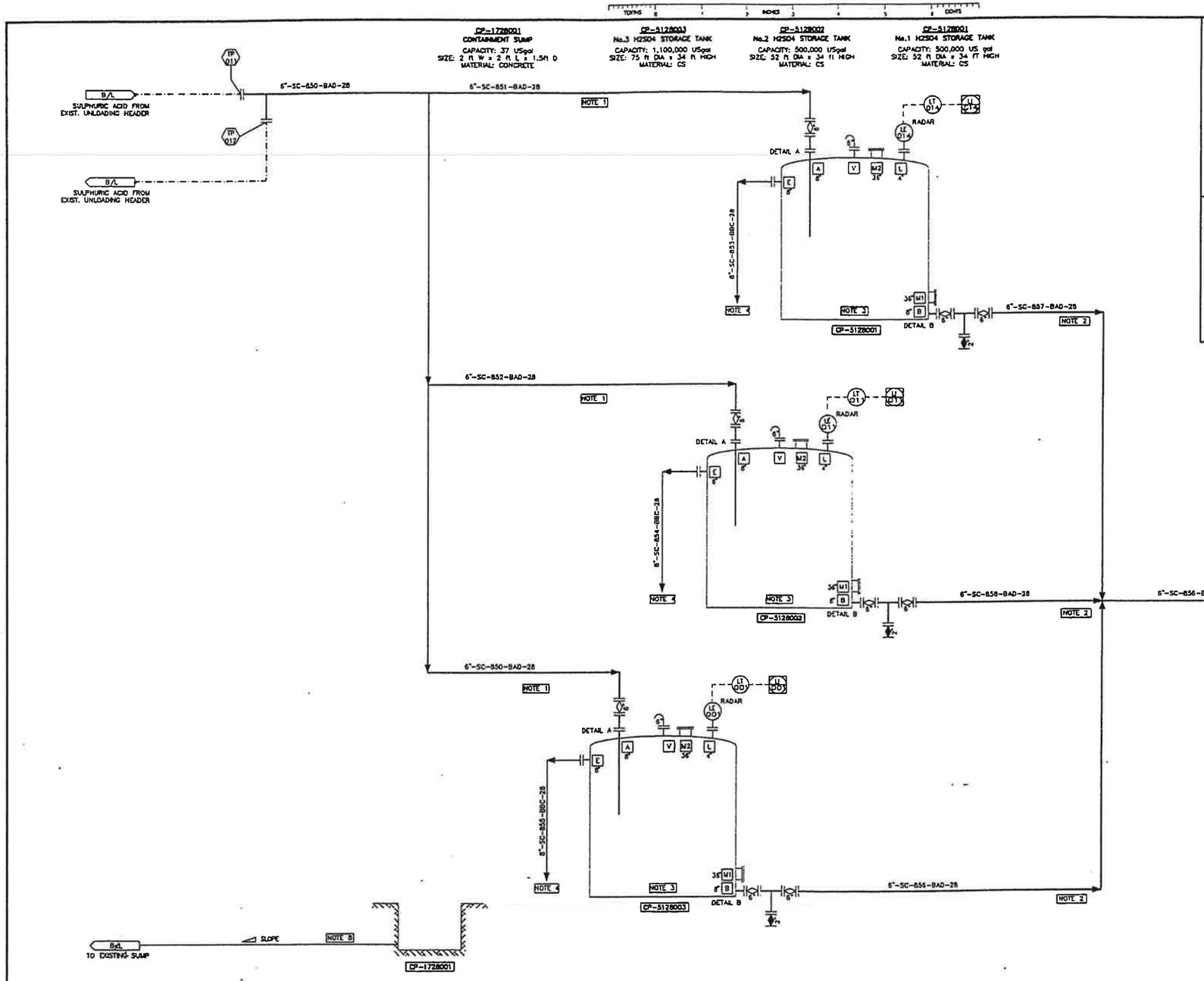

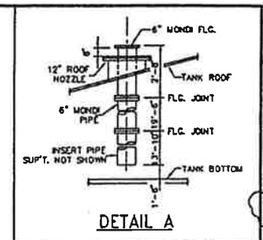

DETAIL A

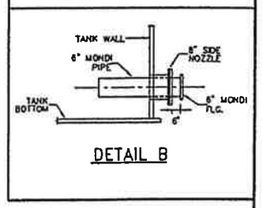

DETAIL B

GENERAL NOTES

1. DESIGN FLOW RATE IN 430 US GPM (BATCH).
2. NORMAL FLOW RATE OUT 332 US GPM. DESIGN FLOW IN@@-430 US GPM.
3. PROVIDE ACID PROOF CONCRETE FLOOR WITH SLOPE OF 8 INCHES PER 100 FEET TOWARDS CLEAN OUT NOZZLE B.
4. OVERFLOW LINE TO BE BROUGHT TO GRADE.
5. TANKS AND PUMPS TO BE IN CONTAINED AREA.
6. NOZZLE A AND B TO BE SCH 80 CS TO ACCOMMODATE 6" MONDI INSERT WITH CERASEAL OR FIBERGLASS ROPE PACKING WRAPPED AROUND OUTSIDE OF INSERT AND COATED WITH PERCOLA MASTIC.
7. THIS DRAWING PREVIOUSLY ISSUED AS AMI # Y6000-500-6-010.
8. LOCATE 4" HDPE DRAIN LINE AT LOW POINT IN SUMP AND SLOPE TO EXISTING SUMP IN SULPHURIC ACID UNLOADING AND STORAGE AREA. 0

EQUIPMENT ON THIS DRAWING

CP-1728001	CONTAINMENT SUMP
CP-5128001	NO.1 H_2SO_4 STORAGE TANK
CP-5128002	NO.2 H_2SO_4 STORAGE TANK
CP-5128003	NO.3 H_2SO_4 STORAGE TANK

AGRA Monenco
CALGARY
ISSUE
MAY 15 2000

NU-WEST INDUSTRIES INC.
3010 CONDA ROAD 500A SPRINGS, ID 83276

REV.	REVISION DESCRIPTION	DATE	DRAWN BY	DESIGNED BY	DWG. CHECK	DESIGN CHECK	LEAD ENG./ DEPT. MGR.	P. ENG./ FIELD MGR.
D	ISSUED FOR TIE-IN REVIEW	00/03/28	AB	RAJM	SSK	RR		
C	ISSUED FOR DESIGN	00/03/06	AB	RAJM	SSK	RR		
B	ISSUED FOR APPROVAL	00/02/08	RH	RAJM	SSK	RR		
A	ISSUED FOR INFORMATION / COMMENTS	99/11/26	Bb	RAJM	RR			
0	ISSUED FOR CONSTRUCTION	00/05/15	AB	RAJM	SSK	RR		

NO.	DWG. NO.	REFERENCE DRAWINGS
8		
7		
6		
5		
4		
3		
2		
1		

ENGINEERING REVIEW		
P. ENG./ SENIOR MGR.	RJT	99/11/26
P. ENG./ DEPT. MGR.	RJT	99/11/26
DESIGN CHECK	RR	99/11/26
DWG. CHECK	SSK	99/11/26
DESIGNED BY	RAJM	99/11/26
DRAWN BY	Bb	99/11/26

THIS DRAWING IS THE PROPERTY OF AGRA MONENCO INC. AND HAS BEEN RELEASED FOR CONFIDENTIAL USE ONLY. IT IS NOT TO BE COMMUNICATED OR DISCLOSED TO OTHERS OR TO BE COPIED IN WHOLE OR IN ANY PART EXCEPT WITH THE PRIOR WRITTEN PERMISSION OF AGRA MONENCO INC.

CLIENT APPROVAL DATE

AGRA MONENCO DWG. NO. Y600D-500-6-103
PROJECT NO. Y600D
SCALE NTS

AGRA Monenco
CHEMISTRY GLOBAL SOLUTIONS

CPO EXPANSION PROJECT
SULPHURIC ACID UNLOADING AND STORAGE
P&ID

DRAWING NO. 28-10-101
REV. 0

AGR-CBI_003932
SUBJECT TO ALL APPLICABLE CONFIDENTIAL BUSINESS INFORMATION PRIVILEGES

H_2SO_4
PATD's

AGR-CBI_003929
SUBJECT TO ALL APPLICABLE CONFIDENTIAL
BUSINESS INFORMATION PRIVILEGES

08	- 10 - 001	North Sulfuric	Flow Sheets	NORTH SULFURIC ACID P & ID GENERAL PLANT	LOST
08	- 10 - 005	North Sulfuric	Flow Sheets	***RESERVED TO GREG FOR P&ID***	
08	- 10 - 007	North Sulfuric	Flow Sheets	NO. SULFURIC ACID PLANT TREATED WATER PLANT (NSP-01)	
08	- 10 - 008	North Sulfuric	Flow Sheets	NO. SULFURIC ACID PLANT INSTRUMENT/PLANT AIR SYSTEM (NSP-02)	
08	- 10 - 009	North Sulfuric	Flow Sheets	NO SULFURIC ACID PLANT ACID STORAGE TK FARM LIMESTONE SLURRY SYSTEM (NSP-03)	
08	- 10 - 010	North Sulfuric	Flow Sheets	NO SULFURIC ACID PLANT STEAM PLANT (NSP-04)	
08	- 10 - 011	North Sulfuric	Flow Sheets	NORTH SULFURIC PLANT POTABLE WATER SYSTEM PFD	
08	- 10 - 012	North Sulfuric	Flow Sheets	POTABLE WATER SYSTEM P&ID NORTH SULFURIC PLANT	
28	- 10 - 101	North Sulfuric Acid	Flow Sheets	CPO EXPANSION PROJECT SULFURIC ACID UNLOADING & ACID STORAGE P&ID	
28	- 10 - 101	North Sulfuric Acid	Flow Sheets	NORTH SULFURIC SULFURIC ACID UNLOADING & ACID STORAGE P&ID	
09	- 10 - 001	General Plant Offsites	Flow Sheets	GENERAL PLANT WELL NO. 1 P&ID	.dwg
09	- 10 - 001	General Plant Offsites	Flow Sheets	ARROW DIAGRAM GUARD HOUSE & SCALES	.tif
09	- 10 - 002	General Plant Offsites	Flow Sheets	PLANT AIR SYSTEM	.tif
09	- 10 - 003	General Plant Offsites	Flow Sheets	GENERAL PLANT FLOW DIAGRAM	
09	- 10 - 005	General Plant Offsites	Flow Sheets	GENERAL PLANT OFFSITE WELL NO.5 P&ID	.dwg
09	- 10 - 006	General Plant Offsites	Flow Sheets	GENERAL PLANT OFFSITE BOOSTER PUMP P&ID	.dwg
09	- 10 - 007	General Plant Offsites	Flow Sheets	GENERAL PLANT OFFSITE WELL NO.7 P&ID	.dwg
09	- 10 - 007	General Plant Offsites	Flow Sheets	GENERAL PLANT FLOW DIAGRAM	.tif
09	- 10 - 008	General Plant Offsites	Flow Sheets	GENERAL PLANT OFFSITE WELL NO.8 P&ID	.dwg
09	- 10 - 009	General Plant Offsites	Flow Sheets	GENERAL PLANT OFFSITE WELL NO.9 P&ID	.dwg
09	- 10 - 010	General Plant Offsites	Flow Sheets	GENERAL PLANT OFFSITE WELL NO.10 P&ID	.dwg
09	- 10 - 011	General Plant Offsites	Flow Sheets	POTABLE WATER SYSTEM PFD	.dwg
09	- 10 - 012	General Plant Offsites	Flow Sheets	POTABLE WATER SYSTEM - P&ID	.dwg
09	- 10 - 013	General Plant Offsites	Flow Sheets	DCS BUILDING / WEST SHOP POTABLE WATER SYSTEM PFD	.dwg
09	- 10 - 014	General Plant Offsites	Flow Sheets	NORTH PLANT SHOP/OFFICE POTABLE WATER SYSTEM PFD	.dwg
09	- 10 - 015	General Plant Offsites	Flow Sheets	RUBBER BUILDING, MOBILE SHOP & ELECT. SHOP AREAS - POTABLE WATER SYSTEM PFD	.dwg
09	- 10 - 016	General Plant Offsites	Flow Sheets	QUALITY CONTROL LAB, TECH SERVICES POTABLE WATER SYSTEM PFD	.dwg
09	- 10 - 017	General Plant Offsites	Flow Sheets	CHEM BLDG/MACHINE/FAB SHOP & WAREHOUSE POTABLE WATER SYSTEM PFD	.dwg
09	- 10 - 018	General Plant Offsites	Flow Sheets	PURCHASING & ADMINISTRATION OFFICES & GUARD SHACK SCALE POTABLE WATER PFD	.dwg
09	- 10 - 019	General Plant Offsites	Flow Sheets	POTABLE WATER SYSTEM P&ID DCS BUILDING	.dwg
09	- 10 - 020	General Plant Offsites	Flow Sheets	GENERAL PLANT WELL CONTROL SCHEME	.dwg
09	- 10 - 021	General Plant Offsites	Flow Sheets	POTABLE WATER SYSTEM P&ID RUBBER SHOP	.dwg
09	- 10 - 023	General Plant Offsites	Flow Sheets	MOUNTAIN FUEL WELL P&ID CP-4108023	.dwg
09	- 10 - 100	General Plant Offsites	Flow Sheets	CPO EXPANSION PROJECT STANDARD P&ID SYMBOLS	Y600D-900-6-000
09	- 10 - 101	General Plant Offsites	Flow Sheets	CPO EXPANSION PROJECT STEAM AND CONDENSATE UTILITY FLOW DIAGRAM	Y600D-900-6-001
09	- 10 - 102	General Plant Offsites	Flow Sheets	CPO EXPANSION PROJECT NATURAL GAS UTILITY FLOW DIAGRAM	Y600D-900-6-002
09	- 10 - 103	General Plant Offsites	Flow Sheets	CPO EXPANSION PROJECT FRESHWATER, WAC, & RECLAIM WATER UTILITY FLOW DIAGRAM	Y600D-900-6-003
09	- 10 - 104	General Plant Offsites	Flow Sheets	CPO EXPANSION PROJECT COOLING POND WATER LOOP UTILITY FLOW DIAGRAM	Y600D-900-6-004
09	- 10 - 105	General Plant Offsites	Flow Sheets	CPO EXPANSION PROJECT CLOSED LOOP COOLING WATER UTILITY FLOW DIAGRAM	Y600D-900-6-005
09	- 10 - 106	General Plant Offsites	Flow Sheets	CPO EXPANSION PROJECT STEAM & CONDENSATE UTILITY P&ID	Y600D-900-6-101
09	- 10 - 107	General Plant Offsites	Flow Sheets	CPO EXPANSION PROJECT NATURAL GAS UTILITY P&ID	Y600D-900-6-102
09	- 10 - 108	General Plant Offsites	Flow Sheets	CPO EXPANSION PROJECT FRESH WATER UTILITY P&ID	Y600D-900-6-103
09	- 10 - 109	General Plant Offsites	Flow Sheets	CPO EXPANSION PROJECT RECLAIM WATER UTILITY P&ID	Y600D-900-6-104

AGR-CBI_003930
SUBJECT TO ALL APPLICABLE CONFIDENTIAL
BUSINESS INFORMATION PRIVILEGES

09 - 10 - 110	General Plant Offsites	Flow Sheets	CPO EXPANSION PROJECT COOLING POND WATER LOOP DIGESTION & PHOS ACID UTILITY P&ID	Y600D-900-6-105
09 - 10 - 111	General Plant Offsites	Flow Sheets	CPO EXPANSION PROJECT COOLING POND WATER LOOP FILTRATION, GRINDING, SCRUBBING UTILITY P&ID	Y600D-900-6-106
09 - 10 - 112	General Plant Offsites	Flow Sheets	CPO EXPANSION PROJECT CLOSED LOOP COOLING WATER INTERCONDENSERS UTILITY P&ID	Y600D-900-6-107
09 - 10 - 113	General Plant Offsites	Flow Sheets	CPO EXPANSION PROJECT CONDENSER WATER COLLECTION & WATER COOLING INDIRECT HEAT EXCHANGER P&ID	Y600D-900-6-108
09 - 10 - 114	General Plant Offsites	Flow Sheets	CPO EXPANSION PROJECT INSTRUMENT AIR UTILITY P&ID	Y600D-900-6-109
09 - 10 - 115	General Plant Offsites	Flow Sheets	CPO EXPANSION PROJECT SAFETY SHOWER/EYEWASH AND UTILITY STATIONS P&ID	Y600D-900-6-110
09 - 10 - 116	General Plant Offsites	Flow Sheets	CPO EXPANSION PROJECT PLANT AIR UTILITY P&ID	Y600D-900-6-111
03E - 10 - 003	East Sulfuric Acid	Flow Sheet	STEAM FLOW DIAGRAM	
03E - 10 - 004	East Sulfuric Acid	Flow Sheet	WATER TREATING AREA-UTILITY PIPING & INSTRUMENTAL FLOW DIAGRAM	
03E - 10 - 007	East Sulfuric Acid	Flow Sheet	ACID PLANT AREA - UTILITY PIPING & INSTRUMENTATION FLOW DIAGRAM	
03E - 10 - 008	East Sulfuric Acid	Flow Sheet	STEAM AND CONDENSATE PROCESS FLOW SHEET	
03E - 10 - 015	East Sulfuric Acid	Flow Sheet	REGENERATION WASTE WATER RECOVERY P & I DIAGRAM	
03E - 10 - 016	East Sulfuric Acid	Flow Sheet	P & I PIPING FOR TERRY TURBINE - EMERGENCY SHUTDOWN SYSTEM	
03E - 10 - 017	East Sulfuric Acid	Flow Sheet	EAST SULFURIC PLANT POTABLE WATER SYSTEM PFD	
03E - 10 - 018	East Sulfuric Acid	Flow Sheet	EAST SULFURIC PLANT POTABLE WATER SYSTEM P&ID	
03E - 10 - 019	East Sulfuric Acid	Flow Sheet	EAST SULFURIC WATER TREATING AREA UTILITY PIPING AND INSTRUMENTATION FLOW DIAGRAM	
29 - 10 - 001			GENERAL PLANT NEW PROCESS PROJECT FLOOW SHEET	
23 - 10 - 101	East Sulfuric Acid	Flow Sheet	EAST SULFURIC COOLING TOWER PIPING AND INSTRUMENTATION FLOW DIAGRAM	
			PLANT UTILITY DIAGRAM PIPING AND INSTRUMENTATION DIAGRAM	321-108
			ACID COOLER & MISC. DRAIN PIPING PIPING AND INSTRUMENTATION DIAGRAM	321-107
			EAST SULFURIC GAS FLOW DIAGRAM PIPING AND INSTRUMENTATION DIAGRAM	321-105
			ACID FLOW PIPING AND INSTRUMENTATION DIAGRAM	321-104
			1350 STPD NORMAL OPERATION CASE WATER AND STEAM MASS & ENERGY BALANCE	321-016
			1351 STPD OPERATION CASE MATERIAL FLOW DIAGRAM	321-015
			NOMENCALTURE	321-001

AGR-CBI_003931
SUBJECT TO ALL APPLICABLE CONFIDENTIAL
BUSINESS INFORMATION PRIVILEGES