Report No. 90-144

ASSESSMENT OF SCRAP SOLVENT HAZARDOUS WASTE STORAGE SYSTEM TAPE MANUFACTURING PLANT, ST. PAUL

To:

3M COMPANY
St. Paul, Minnesota

TERA, inc.

TERA, inc.

6440 Hillcroft, Suite 200
P.O. Box 740038, Houston, Texas 77274, Tel. 713/772-0876, Fax: 713/981-7713

90-144

TANK SYSTEM CERTIFICATION

I have conducted the integrity assessment dated June 18, 1990, of the scrap solvent storage system at the Tape Manufacturing Plant of 3M Company in St. Paul, Minnesota. The EPA ID No. for this facility is MND 000824029. This assessment was performed in accordance with 40 CFR 265.191 (Minnesota 7045.0628 Subpart 2).

With regard to this duty, I certify under penalty of law that I have personally examined and am familiar with the information submitted in this document and all related attachments and that, based on my observations and my inquiry of those individuals immediately responsible for obtaining the information, I believe that the information is true, accurate, and complete. I am aware that there are significant penalties for submitting false information, including the possibility of fine and imprisonment.

John W. Cox

Registered Professional Engineer

Minnesota No. 20195

TERA, Inc.

P. O. Box 740038

Houston, Texas 77274

I hereby certify that this plan, specification, or report was prepared by me or under my direct supervision and that I am a duly Registered Professional Engineer under the laws of the State of Minnesota.

John W. Cox

Date 6/18/90 Registration No. 20195

ASSESSMENT OF SCRAP SOLVENT
HAZARDOUS WASTE STORAGE SYSTEM
TAPE MANUFACTURING PLANT, ST. PAUL

* * *

To

3M COMPANY
St. Paul, Minnesota

* * *

By

TERA, Inc.
Houston, Texas
June, 1990

TABLE OF CONTENTS

Title	Page No.
I. INTRODUCTION	1
II. SYSTEM DESCRIPTION	2
III. CONSIDERATIONS OF ASSESSMENT	3
1. Design Standards	3
2. Hazardous Characteristics of the Waste	5
3. Corrosion Protection	5
5. System Age	5
6. Integrity Examination	6
IV. CONCLUSIONS OF ASSESSMENT	6

ILLUSTRATIONS

Title	Plate No.
System Schematic	1
Tank Fabrication Details	2

APPENDIX - Supporting Documentation

ASSESSMENT OF SCRAP SOLVENT
HAZARDOUS WASTE STORAGE SYSTEM
TAPE MANUFACTURING PLANT, ST. PAUL

I. INTRODUCTION

This work was carried out by TERA, Inc., for 3M Company under Contract No. US-394-S, Activating Letter No. 3000. Its purpose is to provide a written and certified assessment for the scrap solvent storage tank system at the St. Paul Tape Plant. Since secondary containment meeting requirements of 40 CFR 265.193 (MN PCA 7045.0628 Subpart 4) is not provided, assessment is to the requirements of 40 CFR 265.191 (MN PCA 7045.0628 Subpart 2). These rules have the objective of determining whether or not the waste tank system is structurally sound, has adequate pressure controls, is compatible with wastes being handled, is leaking to the environment, and, in general, is fit for its intended service.

Five areas of consideration were addressed, being those specified in the rules, and include:

- Design standards
- Hazardous characteristics of the waste
- Corrosion protection
- Age of the system
- Integrity examination

Results are discussed in Section III. Conclusions are given in Section IV.

A system schematic diagram and fabrication details for the tank are the illustrations for this report. Supporting documentation, including a record of the tank inspection, are contained in the Appendix.

II. SYSTEM DESCRIPTION

Manufacturing of tape products at the St. Paul Plant involves various process and cleaning operations using solvents. Spent solvents from these operations contain dissolved and suspended materials and is called "scrap solvent". The scrap solvent is placed in 55-gallons steel drums at several stations within the plant where it is generated and taken to a central collection point in Building 22 for temporary holding. From here the drums are moved into an unloading area where the contents are removed by a pneumatic suction pump. This point is considered the beginning of the hazardous waste storage system and is shown at the extreme left of Plate 1.

The pump discharge passes through an in-line grinder to reduce the size of suspended solids, then through a run of 2" diameter pipe to the storage tank in Building 51. Pipe running between buildings is insulated and heat traced. The stored scrap solvent is agitated constantly by a recirculation loop powered by the loading pump.

The amount of scrap solvent in the tank is monitored constantly by an ultrasonic level sensor mounted on the tank roof. Digital indicators mounted both at the tank and at the drum unloading station read out total contents in gallons. See Plates A2 and A6. Tank trucks are ordered as necessary to transport the stored scrap solvent for offsite disposal. The flexible tanker loading hose, shown at the extreme right of Plate 1, is considered the end of the hazardous waste storage system for purposes of this assessment. Outdoor pipe from Building 51 to the tanker loading hose is insulated and heat traced.

The tank system and ancillary equipment are indoors and protected from the elements. The exception here is outdoor piping, which, as mentioned above, is insulated and heat traced. External protection for the insulation is weatherproof wrap-around aluminum sheathing. Inside of Building 51 the

II. SYSTEM DESCRIPTION (Continued)

waste tank and adjacent clean chemical tanks are protected against fire by an automatic aqueous film-forming foam water sprinkler system (AFFF) charged with 3M "Light Water".

III. CONSIDERATIONS OF ASSESSMENT

1. Design Standards

a. Storage Tank

Structural details are given on 3M Drawing No. E-540-196, Plate 2 of this report. Design is to 3M Company engineering practice. Notation on the drawing calls for a label by Underwriters Laboratories (UL). There is a UL nameplate on the tank indicating compliance with UL rules in force in 1960, the apparent year of fabrication.

An appropriate standard is NFPA 30 of the National Fire Protection Association. Details were reviewed under requirements of Chapter 2, especially those addressing design, fabrication, spacing, emergency relief venting and foundation (Paragraphs 2-1.1, 2-1.2, 2-2.1, 2-2.2, 2-2.5 and 2-5, respectively).

The tank was found to be in compliance with design, fabrication and foundation requirements of NFPA-30. The shell-to shell spacing of adjacent tanks given in Table 2-7 is 3 ft. Spacing between the waste tank and the closest clean chemical tank is 1.25 ft. Values given in Table 2-7 are based on consideration of access for cooling by fire hose water applied manually during a fire. These rules may not apply indoors when fire suppression is by a light water sprinkler system. Although 1.25 ft spacing seems

III. CONSIDERATIONS OF ASSESSMENT (Continued)

1. Design Standards (Continued)

a. Storage Tank (Continued)

too close, judgement on spacing in this case should be based on 3M Company safety policies and experience.

Tank inspection reported on Plate A1 showed that venting is by a single breather vent with estimated capacity of less than 14,000 SCFH (Plate A3). Based on years of satisfactory service this vent appears to be adequate to handle tank filling and emptying, and thermal breathing. Calculations on Plate A2 show that minimum emergency venting by NFPA 30 criteria is about 75,000 SCFH. This flow rate can be handled by a 4" diameter vent installed above the roof on the existing 4" nozzle on top of the tank (Plate A4). The assumptions on Plate 2A should be reviewed by 3M Company safety engineers for compliance with corporate safety rules. If the assumptions are valid, then the scenario of Plate A2 will require minimum effort to retrofit additional capacity for emergency venting. The ultrasonic level sensor would be displaced from its present position on the 4" nozzle. However, a new nozzle for this purpose can be installed on the manway cover at a remote location where welding can be done safely.

b. Piping, Valves and Fittings

Piping, valves and fittings are to 3M Company standard P-6, a copy of which is included in this report as Plate A7. These standards are adequate for waste system components. Operating pressures and temperatures are well below the limits permitted.

III. CONSIDERATIONS OF ASSESSMENT (Continued)

2. HAZARDOUS CHARACTERISTICS OF THE WASTE

Scrap solvent is classified as EPA waste number F005. Its primary characteristics are ignitability and toxicity (EPA hazard Codes I and T).

3. Corrosion Protection

A review of information published by the National Association of Corrosion Engineers indicates that carbon steel materials of the solvent recovery system are compatible with the scrap solvent waste material. This was verified by thickness measurements taken on the tank. Therefore, no linings or coating are required on inside surfaces of pipes, valves, fittings and the tank. Outsides of tank and indoor piping are protected from rust by paint or black mill finish, and by cover of the building. Outdoor piping running from Building 22 to Building 51 and from Building 51 to the tanker loading hose is insulated and protected by aluminum sheathing. There was no sign of corrosion or rust on any visible external surface of the system components.

No system components are underground, so there are no requirements for cathodic protection.

4. System Age

Age of the tank is established from the date on the fabrication drawing and discussion with 3M personnel, and is determined to be thirty (30) years. System components such as piping, valves, instrumentation and the pump have undergone evolutionary changes over the years to meet demands of the manufacturing processes. For purposes

III. CONSIDERATIONS OF ASSESSMENT (Continued)

4. System Age (Continued)

of establishing when secondary containment is required, the system age is considered to be greater than 15 years.

5. Integrity Examination

A visual inspection was performed on May 18, 1990, supplemented by ultrasonic measurements on the tank. All inspection results are reported in the Appendix on Plate A1.

Ultrasonic thickness measurements showed plate thickness of the tank shell and roof to be at the values specified on the fabrication drawing. There were no signs of deterioration of any system component, and no leaks were observed.

The concrete floors and raised pad under the tank were found to be free of cracks and any sign of uneven settlement or any other distress due to tank support loads.

IV. CONCLUSIONS OF ASSESSMENT

Based on the information available together with the examinations and assessments reported herein it is concluded that, with the exception of providing for emergency venting, the scrap solvent storage tank system at the St. Paul Tape Plant of 3M Company is adequately designed and has sufficient structural strength and compatibility with the waste being handled to avoid collapse, rupture, or failure. Furthermore, the system is not leaking and appears to be fit for continued use in its present service, assuming that adequate emergency venting is installed.

IV. CONCLUSIONS OF ASSESSMENT (Continued)

Considering the close spacing between the waste tank and the adjacent clean chemical tank it is recommended that 3M Company safety personnel assure that adequate capacity for fire suppression is provided for the waste tank.

ILLUSTRATIONS

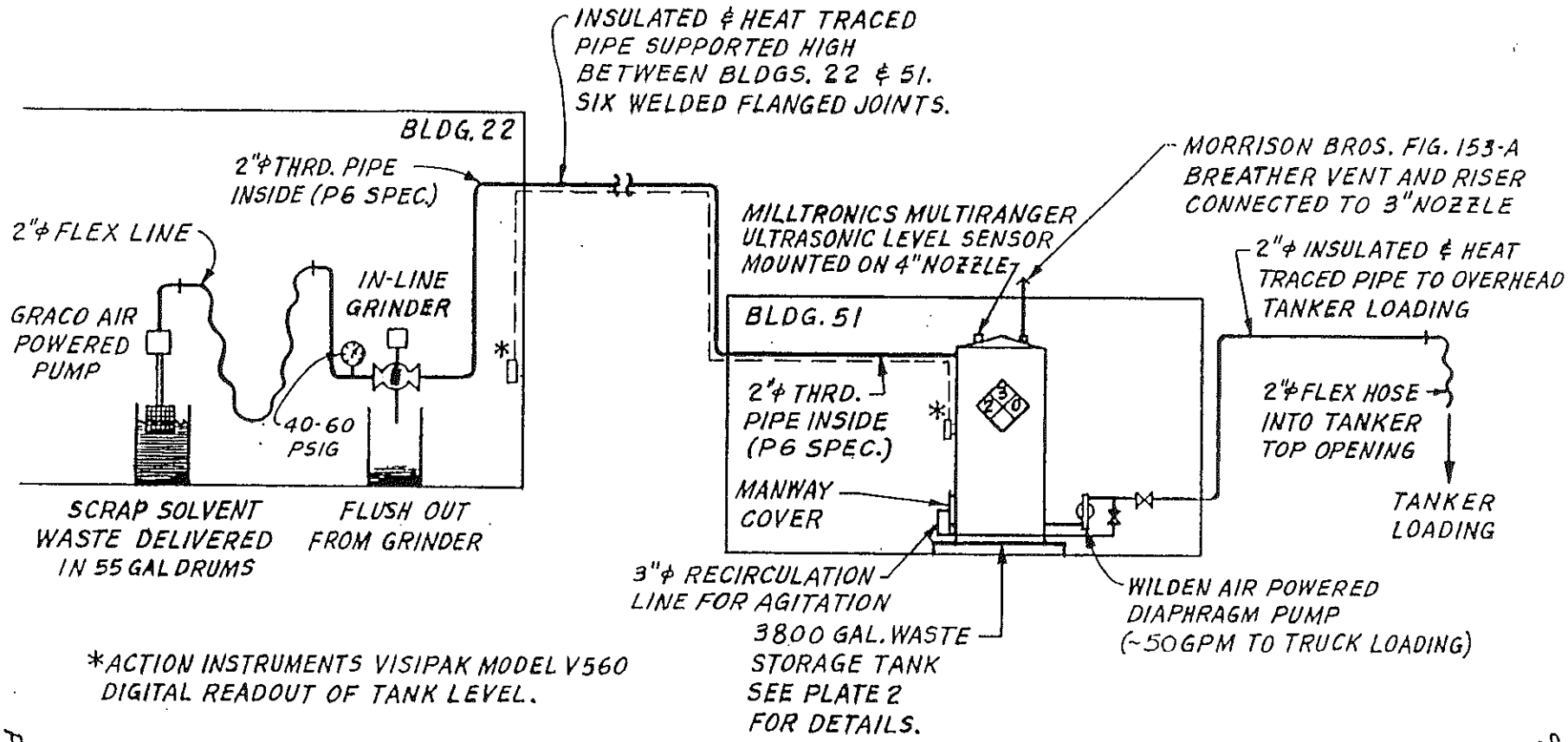

TERA, INC.

PLATE 1

90-144

3 M COMPANY - ST. PAUL TAPE PLANT

SCRAP SOLVENT WASTE STORAGE SYSTEM

APPENDIX

Supporting Documentation

APPENDIX

Supporting Documentation

TABLE OF CONTENTS

Title	Plate No.
Tank Inspection Record	A1
Tank Emergency Venting Calculations	A2
Morrison Bros. Vent No. 153-A	A3
Protectoseal Emergency Vent Series 7800	A4
Milltronics Multiranger Tank Level Sensor	A5
Action Instruments Digital Indicator	A6
3M Piping Specification P-6, Carbon Steel	A7

TERA, INC.

TANK/DRUM INSPECTION RECORD

Sheet: 1 of 1

CLIENT: 3M COMPANY

Job No. 90-144

PLANT LOCATION: St. Paul, Minnesota

Date: 5/18/90

TYPE INSPECTION: EXTERIOR

By: JWC

ITEM NO: CODE: UL 142

YEAR BUILT: 1960

SERVICE: Storage of Spent Solvent Hazardous Waste

CAPACITY: 3,800 gal TANK/DRUM TYPE: Cylinder/flat bottom/cone roof

MATLS: All mild carbon steel

SHELL CONDITION: Satisfactory

ROOF CONDITION: Satisfactory

BOTTOM CONDITION: Satisfactory

JACKET CONDITION: None

SUPPORT TYPE: Skirted base on concrete pad

FOUNDATION CONDITION: Satisfactory

INTERNAL STRUCTURE CONDITION: Not assessible for inspection

WELDED/FLANGED JOINT CONDITION: Satisfactory

NOZZLE CONDITION: Satisfactory

COATING CONDITION: Satisfactory

INSULATION CONDITION: None

SAFETY VALVE CONDITION: Insufficient emergency venting. Normal breather vent is Morrison Bros. # 153-A.

SIGNS OF CRACKS: None

SIGNS OF LEAKAGE: None

SIGNS OF CORROSION: None

SIGNS OF EROSION: None

TEST? Yes TYPE: UT Spots RESULTS: Confirm dwg. th. for shell and roof, 1/4"

OPERATING CONDITIONS: MAX TEMP: amb. MAX PRESS: 4 oz VAC: 1/2oz

REFERENCE INSPECTION RECORDS: None

COMMENTS:
1. Tank is inside Bldg. 51 and shows no signs of deterioration from atmospheric exposure.
2. UT measurements on shell and roof range from .260 to .273 through paint.
3. Shell-to-shell spacing to nearest clean solvent tank is 15".
4. Tank has UL nameplate, gives fabricator as Brown Steel Tank Company, Minneapolis.

SUBJECT: 3M ST. PAUL TAPE PLANT SCRAP SOLV. TANK

BY: J.W.C. DATE: 6/11/90

TERA, inc.

JOB NO.: 90-144

FILE: CALC.

SHEET: 1 OF: 1

EMERGENCY RELIEF VENTING FOR FIRE EXPOSURE

REF. NFPA-30 3RD ED. § 2-2.5

TANK WETTED AREA = $(7.5\pi)(12'-4 - 0'-9) = 273\ ft^2$ (§ 2.-2.5.4)

VENTING CAPACITY = $239{,}000 + 26{,}000 \times \frac{23}{50} \cong 251{,}000$ CFH TOTAL (TABLE 2-8)

ASSUME:

- TANK QUALIFIES FOR REMOTE IMPOUNDING DUE TO SYSTEM OF FLOOR DRAINS IN BLDG. 51 LEADING TO OUTSIDE IMPOUNDMENT.
- LIGHT WATER SPRAY SYSTEM IN TANK AREA MEETS NFPA 15 STDS.
- ON THIS BASIS A FACTOR OF 0.3 MAY BE APPLIED TO THE ABOVE VALUE FROM TABLE 2-8. (§ 2-2.5.7)

FACTORED TOTAL VENTING CAPACITY = $0.3 \times 251{,}000 = \underline{75{,}300\ CFH}$ (§ 2-2.5.7)

CAPACITY OF EXISTING VENT IS NOT AVAILABLE SINCE IT HAS BEEN OUT OF PRODUCTION BY THE SUPPLIER. SEE PLATE 3A. (PER TELECON W/M. LATTNER OF MORRISON BROS. ON 6/11/90.)

NEGLECT CAPAPACITY OF EXISTING VENT (EST. <14,000 CFH) AND TRY FOR A NEW PRESSURE ONLY EMERGENCY VENT OF 4" SIZE TO INSTALL ON THE EXISTING 4" TANK ROOF NOZZLE.

PROTECTOSEAL NO. 7804H WITH 8 OZ/IN^2 SET PRESS. WILL PASS THE REQ'D. FLOW OF 75,300 CFH WITH TANK PRESS. OF 18½" WATER COLUMN (.67 psig). SEE PLATE 4A.

0.67 psig TANK PRESSURE PRODUCES: $\frac{pd}{2t} = \frac{0.67 \times 90}{2 \times .25} = 121$ psi TANGENT STRESS IN SHELL

$\frac{pd}{4} = \frac{0.67 \times 90}{4} = 15$ #/in TENSION IN ROOF-TO-SHELL JOINT.

THESE ARE TRIVIAL DEMANDS ON THE TANK STRUCTURE, SO PROTECTOSEAL NO. 7804H @ 8 OZ/IN^2 IS O.K.

PROTECTOSEAL®
SAFETY WITHOUT COMPROMISE

Series
No. 7800

Emergency Pressure Vent
Certified Air Flow Curves

PRESSURE

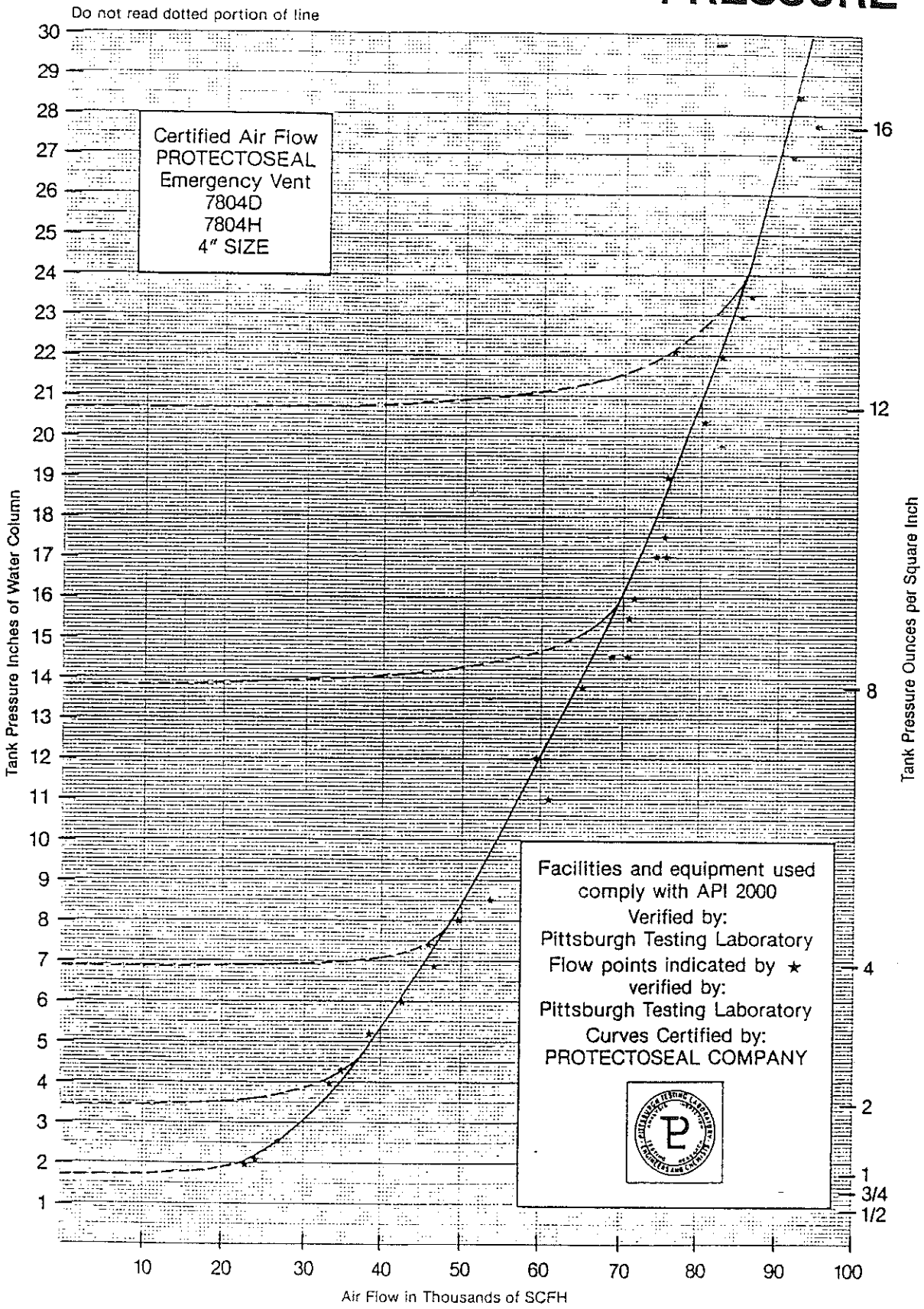

The Pro. oseal Company / 225 Foster Avenue, Bensenville, IL 60106-1690 / 1-70o-595-0800, Telex: 28-2549

SPECIFICATIONS

Series No. 7800
Emergency Pressure Vent

SIDE VIEW

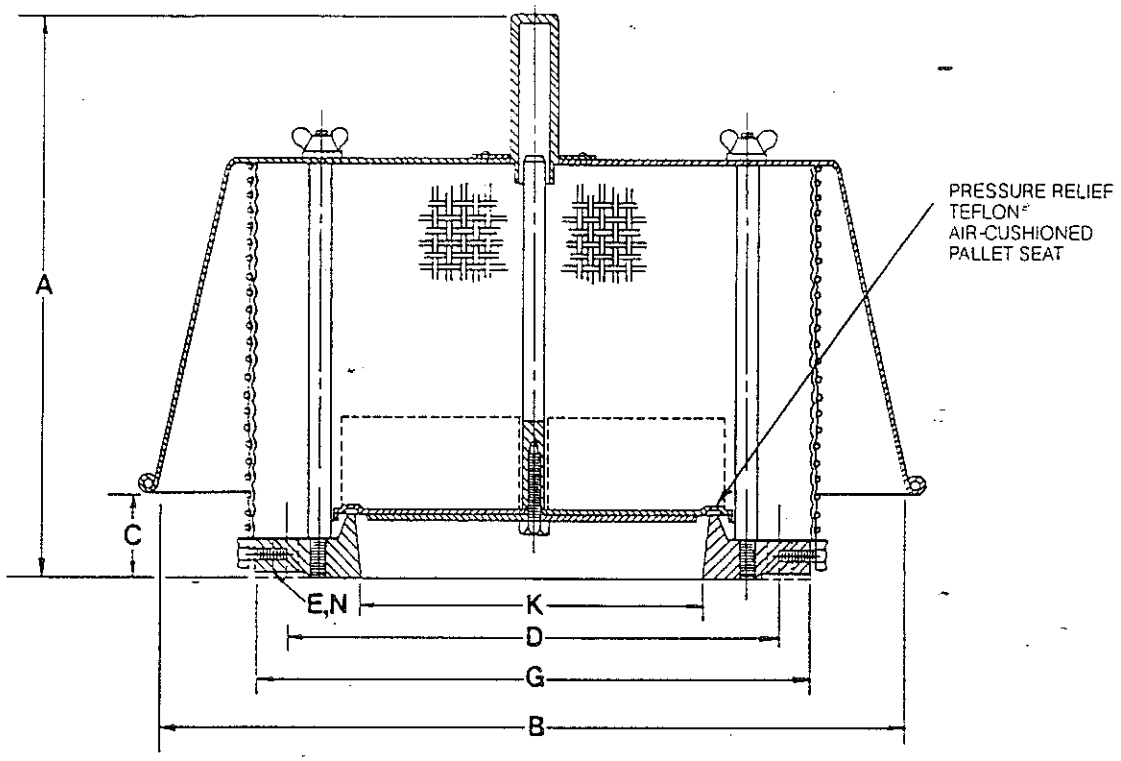

SERIES NO. 7800

DIMENSIONS

Cat. No.	K Pipe Size	A Ht.	B Width	C	D B.C.	E Dia.	G Dia.	No. N Holes
			Standard Construction					
7802H	2"	8¼"	8½"	¾"	4¾"	⅝-11	6"	Stud
7803H	3"	10¼"	12¼"	2⅛"	6"	¾"	7½"	4
7804H	4"	10 9/16"	12¼"	2⅜"	7½"	¾"	9"	8
7806H	6"	13⅛"	14½"	2 11/16"	9½"	⅞"	11"	8
7808H	8"	15¼"	17"	3⅜"	11¾"	⅞"	13½"	8
7810H	10"	16⅝"	22¾"	2¼"	14¼"	1"	16"	12
7812H	12"	18⅝"	25⅛"	2¾"	17"	1"	19"	12
7816ASA	16"	20"	26¾"	6⅝"	21¼"	1⅛"	23½"	16
7820ASA	20"	20"	32"	6⅝"	25"	1¼"	27½"	20
7820API	20"	20"	32"	6⅝"	23½"	¾"	26"	16
7824ASA	24"	21"	40"	6⅝"	29½"	1⅜"	32"	20
7824API	24"	21"	40"	6⅝"	27½"	¾"	30"	20

Add prefix "C", "E" or "F" for other materials of construction. See chart on reverse side for material specifications.
Check with Sales Department for availability and scheduled delivery.

THE PROTECTOSEAL COMPANY
225 Foster Ave., Bensenville, IL 60106-1690
Fax: 1-708-595-8059 Tlx: 28-2549
Ph: 1-708-595-0800

SAFETY WITHOUT COMPROMISE

©1985 The Protectoseal Company

Series No. 7800

Emergency Pressure Vent

Emergency Vent for Pressure Relief

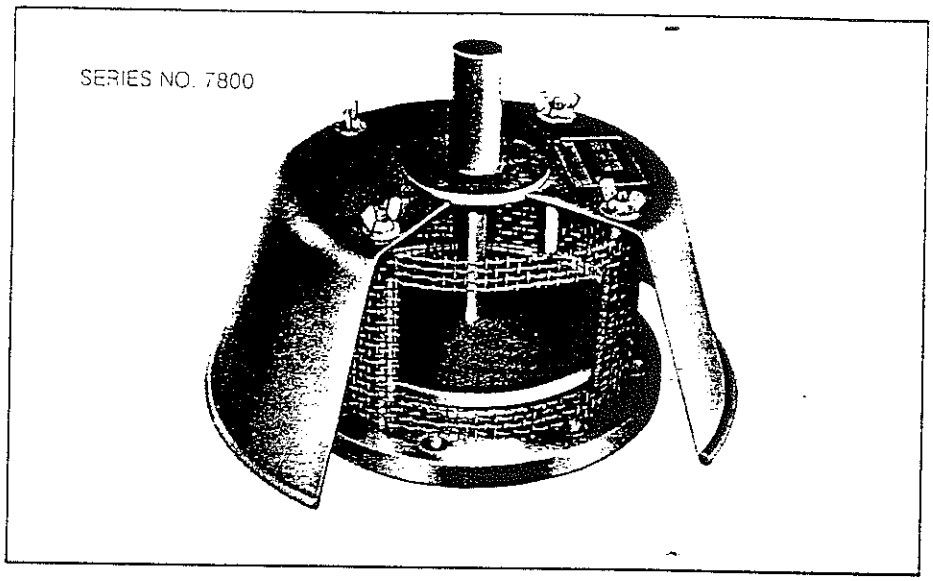

OBJECTIVE

Protectoseal Series No. 7800 Emergency Relief Pressure Vents are designed to provide emergency relief capacity beyond that furnished by the operating vent on tanks, low pressure vessels and piping. Series No. 7800 Emergency Vents do not provide vacuum relief. Vacuum relief must be supplied by the operating vent with which the tank is equipped. (See Protectoseal-Series Nos. 830, 8540, 6240, 18540, 16240.)

TECHNIQUE

.der normal operating conditions, the pallet assembly is closed providing a vapor-tight seal. In the event of an emergency (fire involvement of the tank) the pallet lifts to vent excess vapors thereby protecting tank from dangerous over-pressurization. Pallet automatically closes and reseals when the pressure is reduced.

CONSTRUCTION

Standard: 2-inch through 12-inch sizes–Aluminum base, hood and pallet assembly, Stainless Steel guides. 16-inch through 24-inch sizes–Steel flange with Stainless Steel seat, Steel hood, Aluminum pallet assembly, Stainless Steel guides. All sizes feature Protectoseal's unique FEP Teflon® Air Cushioned Seating.

Custom: Steel flange with Stainless steel seat, Steel hood, Stainless Steel pallet assembly and guides. Aluminum base and hood, Stainless Steel pallet assembly and guides (available in 2-inch through 12-inch sizes only). All Stainless Steel construction. All feature Teflon® Air Cushioned Seating. Other ..erials available upon request. Rubber or metal-to-metal seating also available.

SPECIAL FEATURES

Easy Inspection and Maintenance. Design and light weight of unit permit easy, convenient handling for inspection and maintenance. Coarse mesh screen prevents entry of foreign matter into seating area.

Maintains Accurate Settings. Factory testing prior to shipment assures every unit meets Protectoseal's stringent requirements for accuracy. Standard setting of 1 oz./sq. in. on all units. Higher settings are also available upon request.

Air-Cushioned Seating. A Protectoseal patented design. Unique vent seat incorporates a flat, smooth film of FEP Teflon® to form a floating air seal. Featuring peripheral guiding and center stabilizing stems to insure proper alignment and tight seating. Tested to insure low leak rates. Leakage rate at standard settings is no more than 1 cu. ft. of standard air per hour at 90% of the set point.

Numerous Sizes Available. 2-inch through 12-inch vents mate with standard A.N.S.I. flanged connections. 16-inch through 24-inch mate with applicable A.P.I. or A.N.S.I. bolting specifications. Other drilling patterns available on special request. See chart on reverse side for specific data.

Quality Assurance. Prior to shipment, each unit is factory tested for leakage and correct settings to meet Protectoseal's high standards.

MATERIALS OF CONSTRUCTION

Series	Size	Base Flange/Seat	Hood	Pallet*	Pallet Diaphragm
7800	2"-12"	Alum./Alum.	Aluminum	Aluminum	Teflon®
7800	16"-24"	Steel/316 S.S.	Steel	Aluminum	Teflon®
C7800	2"-12"	Steel/316 S.S.	Steel	316 S.S.	Teflon®
C7800	16"-24"	Steel/316 S.S.	Steel	316 S.S.	Teflon®
E7800	2"-12"	Alum./Alum.	Aluminum	316 S.S.	Teflon®
F7800	2"-12"	316 S.S./316 S.S.	316 S.S.	316 S.S.	Teflon®
F7800	16"-24"	316 S.S./316 S.S.	316 S.S.	316 S.S.	Teflon®

*On Steel and Aluminum vents, weights are Steel or Lead. On Stainless Steel vents, weights are Stainless Steel or Lead.

2"-12" Aluminum vents flanged to mate with 125# FF A.N.S.I. Steel and Stainless Steel units flanged to mate with 150# RF A.N.S.I. 16"-24" vents flanged to mate with applicable A.N.S.I. or A.P.I. FF flange connections.

ATTACHMENT 2

Kortech Consulting, Inc.
1397 Geneva Ave. N. Suite 200B Oakdale, MN 55128
(651) 578-7540 office
(651) 730-0369 fax

External inspection of tank PET051-01 and corresponding piping.

1) Tank and piping system not in service at time of inspection system down for pump replacement.

2) The tank meets the requirements of UL142 and can continue in service.

   a) Tank metal thickness lowest reading .243, UL requirement .167 minimum.
   b) No indication of pitting, corrosion or other signs of deterioration on the tank shell and roof.
   c) All welds are in good condition no sign of cracking or other weld defects.

3) Piping and piping components are in good condition no signs of leaking or deterioration.

   a) Piping is properly supptored
   b) Insulated from Bldg 22 to Bldg 51appears to be in good shape.

4) As per UL142 15.6 tank PET051-01 is equipped with a normal vent (3" Morrison Bros. Co. model 153A, 1.25 oz vacuum and 1.5 oz pressure) and an emergency vent (4" Protecto-seal model 7804-H 8 oz pressure, full open pressure 16 oz at 90500 SCFH)

5) Some of the piping is not to the specifications of 3M manual 13 piping spec's P4 through P6.

RECOMMENDATIONS:

1) The 3" Morrison Bros. vent is over 10 years old and should be replaced.
2) A section of the insulated piping should have the insulation removed and inspected for under insulation corrosion.
3) The tank, piping and area around the tank should be cleaned up for future yearly inspections.

Gary J. Sinnen

ABOVEGROUND STORAGE TANK INSPECTION

Kortech Consulting, Inc.

PETO51-01

SHELL APPURTENANCES AND ATTACHMENTS

MARK	SIZE	SERVICE	NOZZLE NECK UTMs	REPAD SIZE AND THICKNESS	TEST HOLE Y/N	SIZE & CONDITION ~~REPAD~~ NECK TO SHELL WELD	SIZE & CONDITION REPAD TO NECK WELD	CHIME TO CENTER OF NOZZLE	VERT WELD TO CENTER LINE	WELD SPACING (NOTE 1)	COMMENTS (Problems, Settlement, Etc.)
A	3"	FLANGED	.210	NA	NA	1/4 ACCEPTABLE	NA	142"	+8" FROM A	OK	NONE
B	20"	MANWAY	.342	NA	NA	1/4 ACC.	NA	30"	+ 66" FROM A	OK	NONE PET UTM .369
C	1/4	LEAK DETECTION	NA	NA	NA	NA	NA	3"	+ 99 FROM A	NA	NONE
D	3"	GAUGE CONN.	NA	NA	NA	1/4 ACC	NA	6"	+ 102 FROM A	OK	NONE
E	1"	PIPE COUPLING	NA	NA	NA	1/4 ACC	NA	9"	+ 120 FROM A	OK	NONE
F	4"	DRAIN	.240	NA	NA	1/4 ACC	NA	6"	+ 140 FROM A	OK	NONE
G	3"	RECIRCULATING	.212	NA	NA	1/4 ACC	NA	142"	+ 206 FROM A	OK	NONE
ROOF									FROM WEDGE		
I	1"	PLUGED	NA	NA	NA	1/4 ACC	NA	NA	2 1/2	OK	NONE
J	20"	MANWAY +	.340	NA	NA	1/4 ACC	NA	NA	20"	OK	ALSO A CONSERVATION VENT TO ROOF
K	4"	FLOAT SWITCH	.240	NA	NA	1/4 ACC	NA	NA	37"	OK	NONE
L	3"	CONSERVATION VENT	.210	NA	NA	1/4 ACC	NA	NA	49"	OK	NONE
M	2"	VENT RETURN	NA	NA	NA	1/4 ACC	NA	NA	40" S SW	OK	NONE

NOTE 1: RECORD WELD CLEARANCES IF LESS THAN API REQUIREMENTS OR IF LESS THAN 3" TOE-TO-TOE OF WELDS.

COMMENTS:

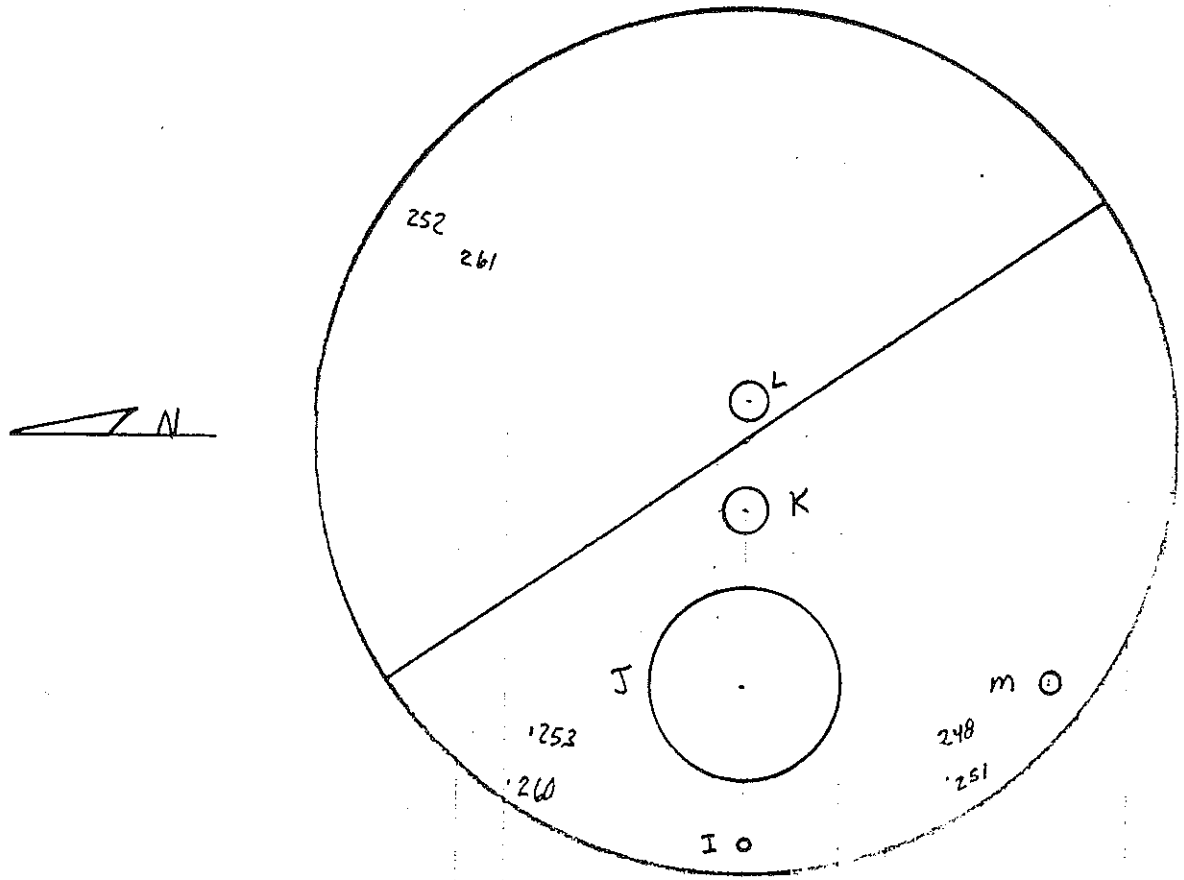

PET051-01

= 10"

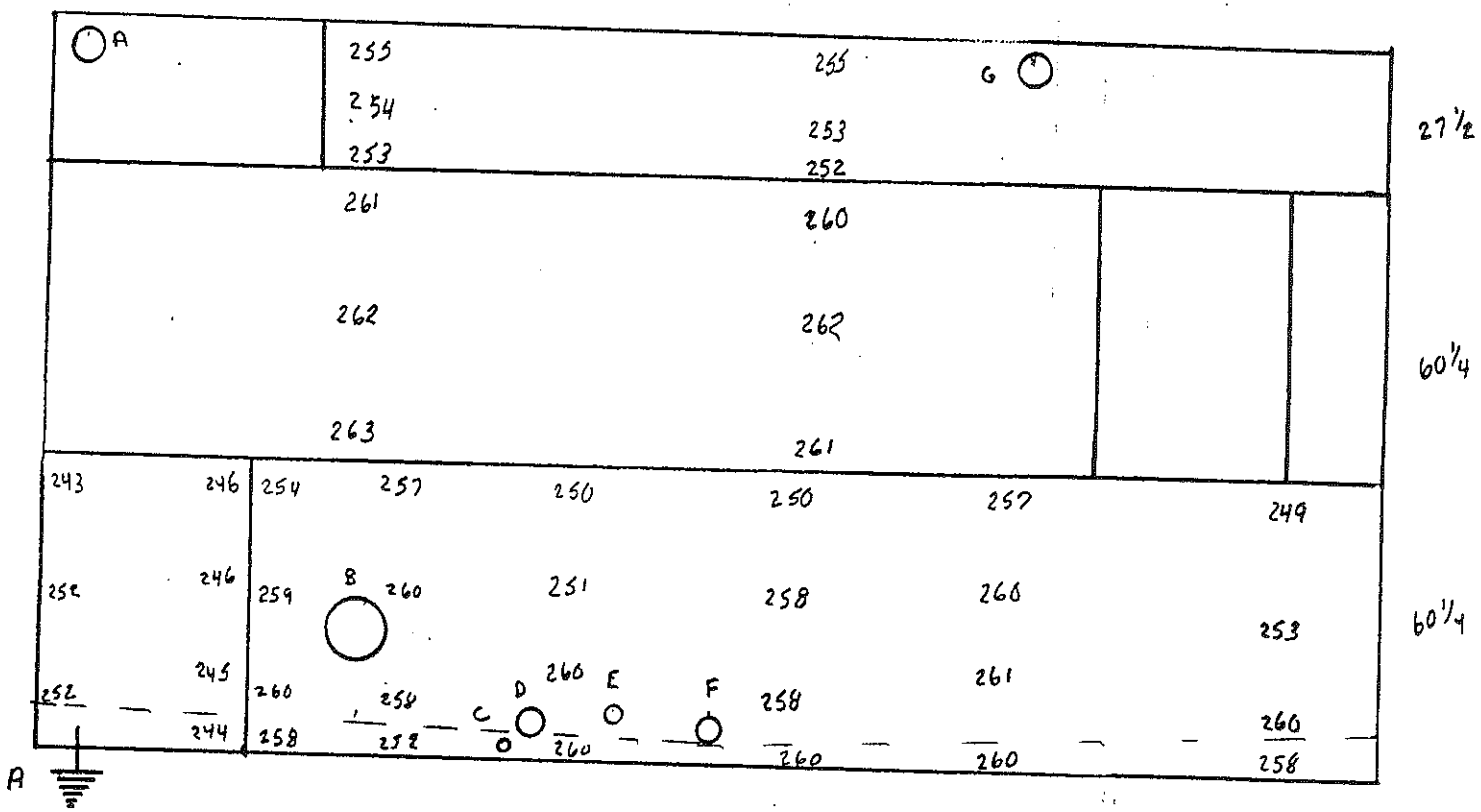

PET051-01

UL 87238

PIPING OUT SIDE
IS INSULATED

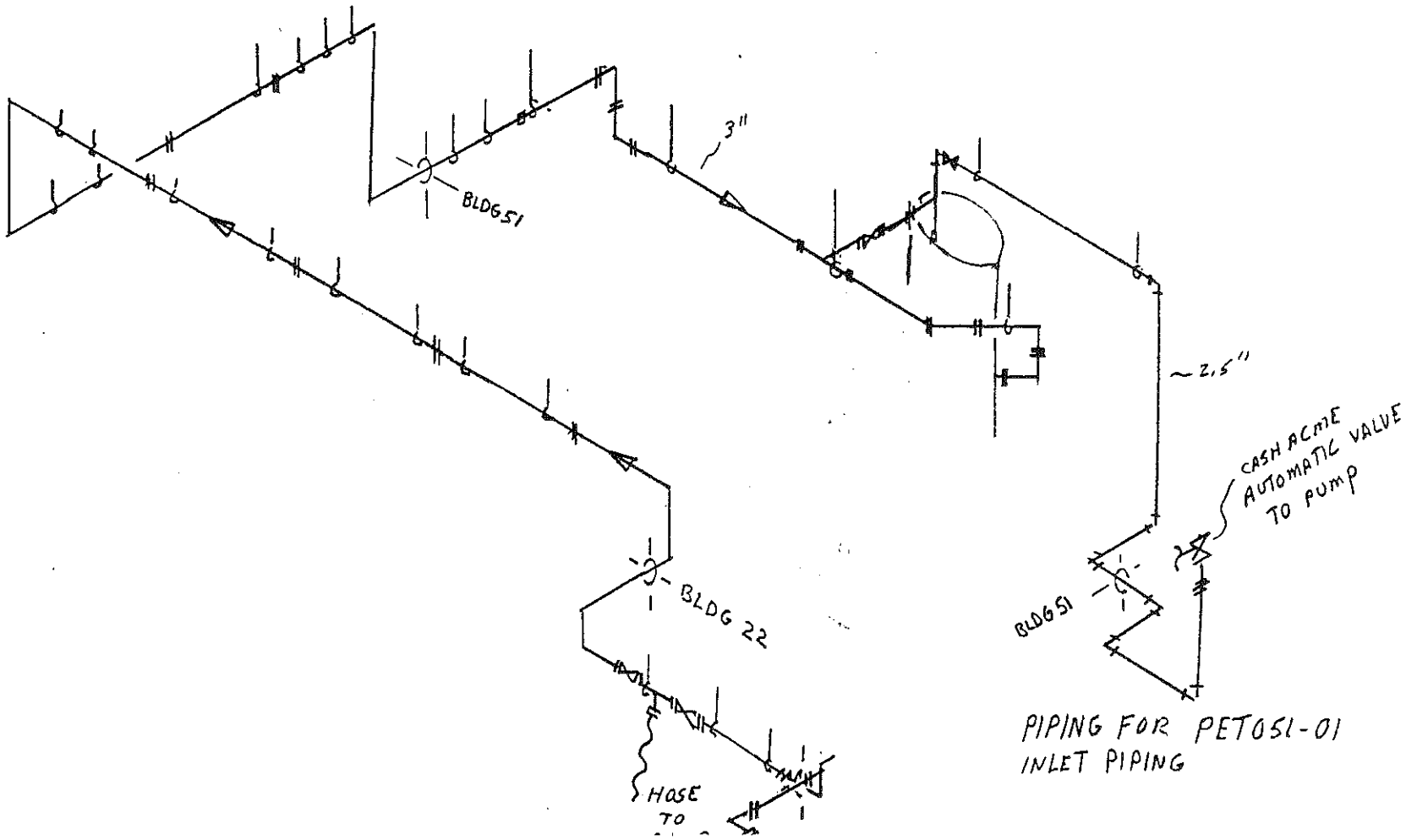

PIPING FOR PET051-01
INLET PIPING

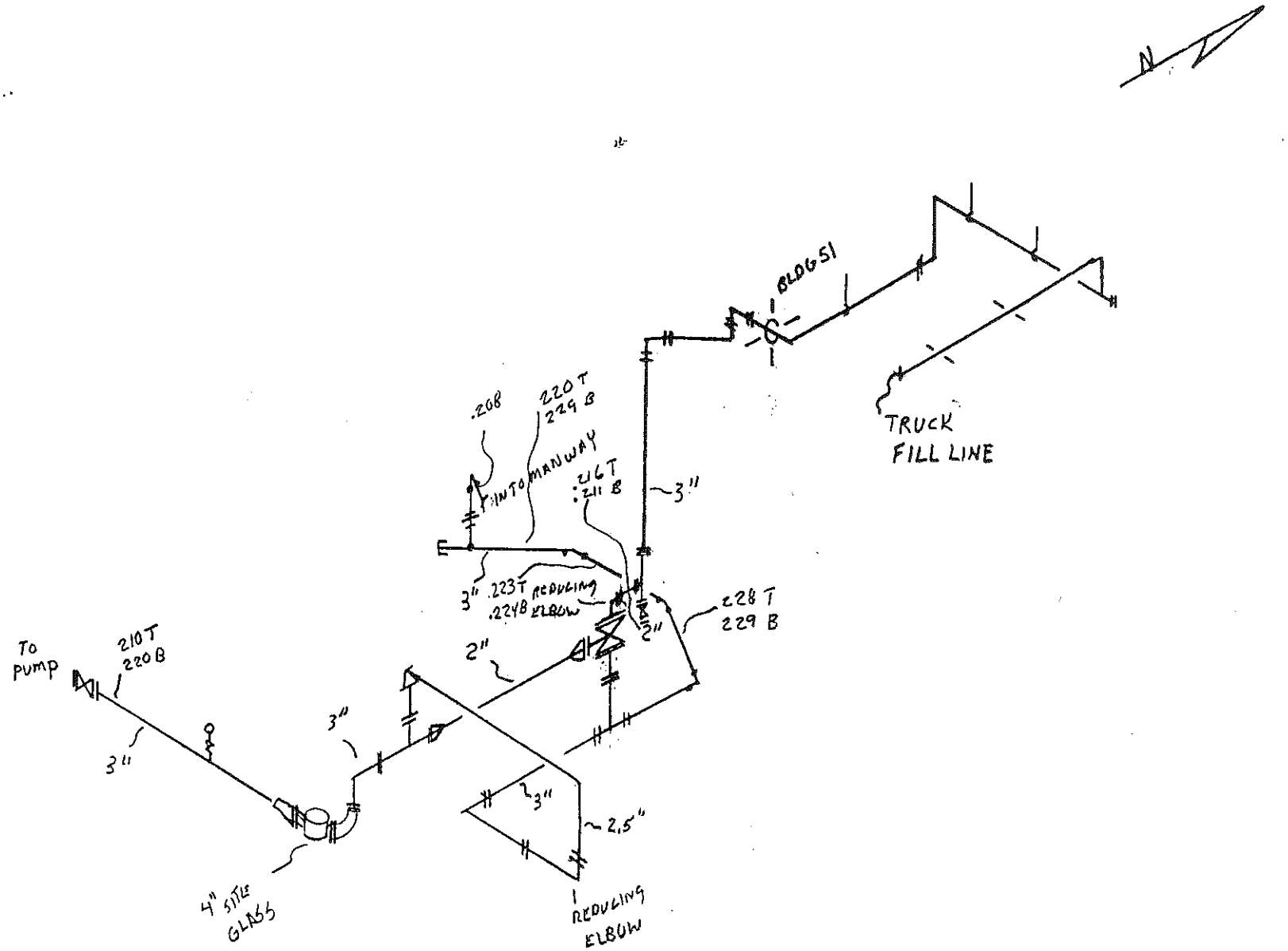

RECIRCULATING AND OUTLET PIPING

TANK PET051-01

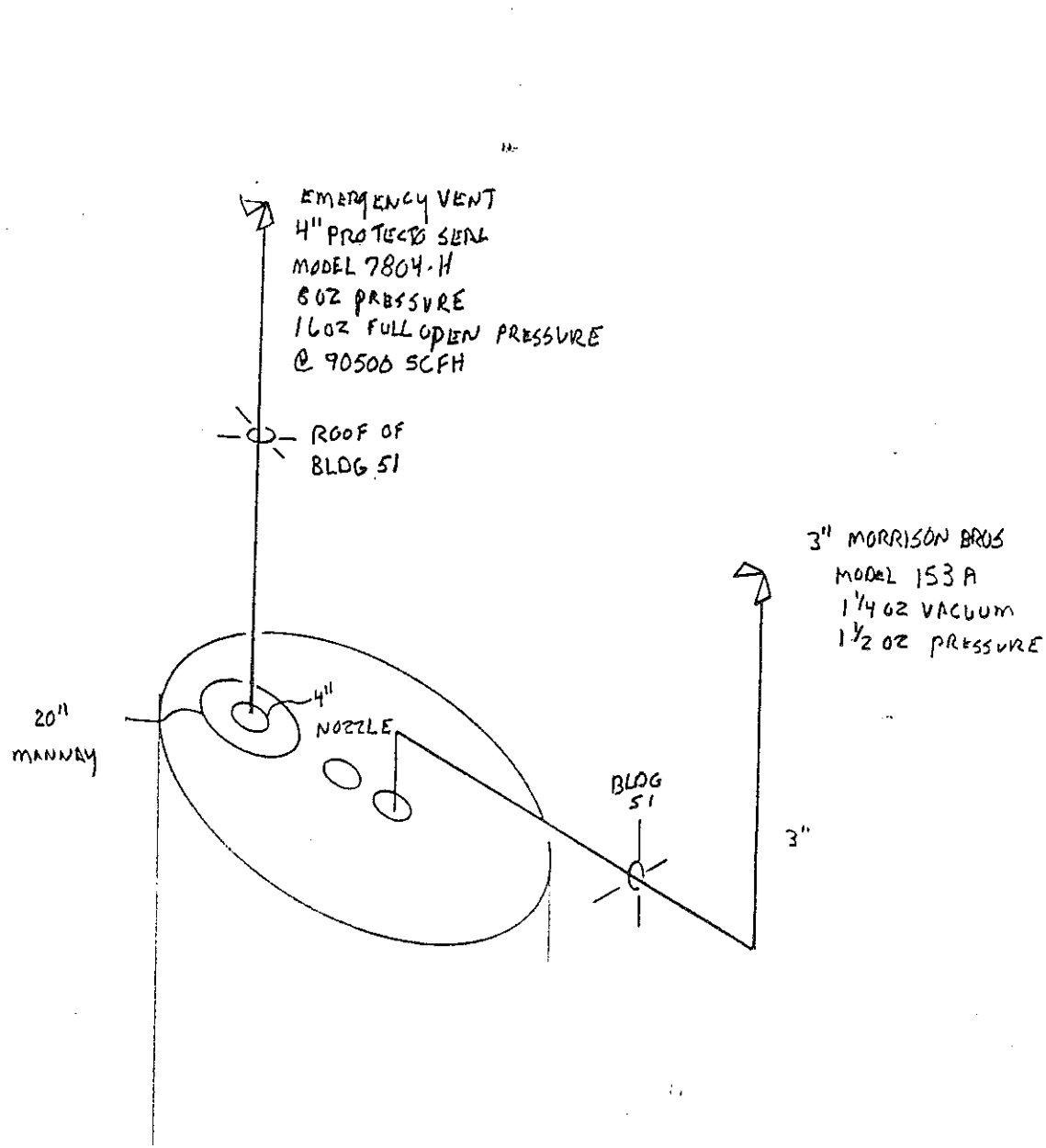

NORMAL AND EMERGENCY VENTS
TANK PET051-01

Kortech Consulting, Inc.
Construction Management - Safety Compliance

ULTRASONIC INSPECTION CALIBRATION and DATA SHEET

MMS# PCT051-01 v System piping DATE: 10-21-99

ULTRASONIC EQUIPMENT:

PANAMETRICS 36DL PLUS S/N: 982044807

TRANSDUCER:

✓ S/N: 129707, MODEL: D791 RM, DIAMETER: .312, FREQUENCY 5.0 MHZ
____ S/N: 89816, MODEL: D790 SM, DIAMETER: .312, FREQUENCY 5.0 MHZ
____ S/N: 897232, MODEL: D790 SM, DIAMETER: .312, FREQUENCY 5.0 MHZ

CALIBRATION BLOCK:

✓ S/N 98-8317 CARBON STEEL

____ S/N 98-8502 STAINLESS STEEL

____ S/N 95-7728 CARBON STEEL

____ S/N 94-6706 CARBON STEEL

UTM CALIBRATION:

NOMINAL	START OF INSPECTION	END OF INSPECTION
1) 3.0	3.00	3.00
2) 2.0	2.01	2.00

INSPECTOR NAME: GARY J SINNEN ___ API 510 # 5117 X API 653 # 6329

Feb 1999

DAILY INSPECTION LOG - HAZARDOUS WASTE TANKS

Plant _____
Month _____
Tank ID _____

Date	1	2	3	4	5	6	7	8	9	10	11	12	13	14	15	16	17	18	19	20	21	22	23	24	25	26	27	28	29	30	31
Tanks																															
General Condition	✓	✓	✓	✓	✓			✓	✓	✓	✓	✓			✓	✓	✓	✓	✓			✓	✓	✓	✓	✓					
Seams	✓	✓	✓	✓	✓			✓	✓	✓	✓	✓			✓	✓	✓	✓	✓			✓	✓	✓	✓	✓					
Manways, connections, gaskets	✓	✓	✓	✓	✓			✓	✓	✓	✓	✓			✓	✓	✓	✓	✓			✓	✓	✓	✓	✓					
Foundation	✓	✓	✓	✓	✓			✓	✓	✓	✓	✓			✓	✓	✓	✓	✓			✓	✓	✓	✓	✓					
Piping																															
All Aboveground Piping and Connections	✓	✓	✓	✓	✓			✓	✓	✓	✓	✓			✓	✓	✓	✓	✓			✓	✓	✓	✓	✓					
Pumps	✓	✓	✓	✓	✓			✓	✓	✓	✓	✓			✓	✓	✓	✓	✓			✓	✓	✓	✓	✓					
Overfill/Spill Control Equipment																															
Level Controls	✓	✓	✓	✓	✓			✓	✓	✓	✓	✓			✓	✓	✓	✓	✓			✓	✓	✓	✓	✓					
Temp. Gauge Data	✓	✓	✓	✓	✓			✓	✓	✓	✓	✓			✓	✓	✓	✓	✓			✓	✓	✓	✓	✓					
Pressure Gauge Data	✓	✓	✓	✓	✓			✓	✓	✓	✓	✓			✓	✓	✓	✓	✓			✓	✓	✓	✓	✓					
Alarms	✓	✓	✓	✓	✓			✓	✓	✓	✓	✓			✓	✓	✓	✓	✓			✓	✓	✓	✓	✓					
Secondary Containment	✓		✓	✓	✓			✓	✓	✓	✓	✓			✓	✓	✓	✓	✓			✓	✓	✓	✓	✓					
Inspector's Initials	[illegible]	[illegible]	[illegible]	[illegible]	[illegible]			[illegible]	[illegible]	[illegible]	[illegible]	[illegible]			[illegible]	[illegible]	[illegible]	[illegible]	[illegible]			[illegible]	[illegible]	[illegible]	[illegible]	[illegible]					

Comments

Inspector's initials

Jan 1999

DAILY INSPECTION LOG - HAZARDOUS WASTE TANKS

Plant _____
Month _____
Tank ID _____

Date	1	2	3	4	5	6	7	8	9	10	11	12	13	14	15	16	17	18	19	20	21	22	23	24	25	26	27	28	29	30	31
Tanks																															
General Condition				✓	✓	✓	✓			✓	✓	✓	✓	✓	✓			✓	✓	✓	✓	✓			✓	✓	✓	✓	✓		
Seams				✓	✓	✓	✓			✓	✓	✓	✓	✓	✓			✓	✓	✓	✓	✓			✓	✓	✓	✓	✓		
Manways, connections, gaskets				✓	✓	✓	✓			✓	✓	✓	✓	✓	✓			✓	✓	✓	✓	✓			✓	✓	✓	✓	✓		
Foundation				✓	✓	✓	✓			✓	✓	✓	✓	✓	✓			✓	✓	✓	✓	✓			✓	✓	✓	✓	✓		
Piping																															
All Aboveground Piping and Connections			✓	✓	✓	✓	✓			✓	✓	✓	✓	✓	✓			✓	✓	✓	✓	✓			✓	✓	✓	✓	✓		
Pumps			✓	✓	✓	✓	✓			✓	✓	✓	✓	✓	✓			✓	✓	✓	✓	✓			✓	✓	✓	✓	✓		
Overfill/Spill Control Equipment																															
Level Controls			✓	✓	✓	✓	✓			✓	✓	✓	✓	✓	✓			✓	✓	✓	✓	✓			✓	✓	✓	✓	✓		
Temp. Gauge Data			✓	✓	✓	✓	✓			✓	✓	✓	✓	✓	✓			✓	✓	✓	✓	✓			✓	✓	✓	✓	✓		
Pressure Gauge Data			✓	✓	✓	✓	✓			✓	✓	✓	✓	✓	✓			✓	✓	✓	✓	✓			✓	✓	✓	✓	✓		
Alarms			✓	✓	✓	✓	✓			✓	✓	✓	✓	✓	✓			✓	✓	✓	✓	✓			✓	✓	✓	✓	✓		
Secondary Containment			✓	✓	✓	✓	✓			✓	✓	✓	✓	✓	✓			✓	✓	✓	✓	✓			✓	✓	✓	✓	✓		
Inspector's Initials			[illegible]	[illegible]	[illegible]	[illegible]	[illegible]			[illegible]	[illegible]	[illegible]	[illegible]	[illegible]	[illegible]			[illegible]	[illegible]	[illegible]	[illegible]	[illegible]			[illegible]	[illegible]	[illegible]	[illegible]	[illegible]		

Comments

Told Charlie cabinet leaking pump

Charlie
Tightened
all flanges
all locks stopped

Dec 1998

DAILY INSPECTION LOG - HAZARDOUS WASTE TANKS

Plant _____
Month _____
Tank ID _____

Date	1	2	3	4	5	6	7	8	9	10	11	12	13	14	15	16	17	18	19	20	21	22	23	24	25	26	27	28	29	30	31
Tanks																															
General Condition																															
Seams																															
Hatways, connections, gaskets																															
Foundation																															
Piping																															
All Aboveground Piping and Connections																															
Pumps																															
Overfill/Spill Control Equipment																															
Level Controls																															
Temp. Gauge Data																															
Pressure Gauge Data																															
Alarms																															
Secondary Containment																															
Inspector's Initials																															

Comments

Nov 1998

DAILY INSPECTION LOG - HAZARDOUS WASTE TANKS

Plant _____
Month _____
Tank ID _____

Date	1	2	3	4	5	6	7	8	9	10	11	12	13	14	15	16	17	18	19	20	21	22	23	24	25	26	27	28	29	30	31
Tanks																															
General Condition																															
Seams																															
Hatways, connections, gaskets																															
Foundation																															
Piping																															
All Aboveground Piping and Connections																															
Pumps																															
Overfill/Spill Control Equipment																															
Level Controls																															
Temp. Gauge Data																															
Pressure Gauge Data																															
Alarms																															
Secondary Containment																															
Inspector's Initials																															

Comments

Oct 1998

DAILY INSPECTION LOG - HAZARDOUS WASTE TANKS

Plant _____
Month _____
Tank ID _____

Date	1	2	3	4	5	6	7	8	9	10	11	12	13	14	15	16	17	18	19	20	21	22	23	24	25	26	27	28	29	30	31
Tanks																															
General Condition																															
Seams																															
Manways, connections, gaskets																															
Foundation																															
Piping																															
All Aboveground Piping and Connections																															
Pumps																															
Overfill/Spill Control Equipment																															
Level Controls																															
Temp. Gauge Data																															
Pressure Gauge Data																															
Alarms																															
Secondary Containment																															
Inspector's Initials																															

Comments

Sept 1998

DAILY INSPECTION LOG - HAZARDOUS WASTE TANKS

Plant _____
Month _____
Tank ID _____

Date	1	2	3	4	5	6	7	8	9	10	11	12	13	14	15	16	17	18	19	20	21	22	23	24	25	26	27	28	29	30	31
Tanks																															
General Condition																															
Seams																															
Manways, connections, gaskets																															
Foundation																															
Piping																															
All Aboveground Piping and Connections																															
Pumps																															
Overfill/Spill Control Equipment																															
Level Controls																															
Temp. Gauge Data																															
Pressure Gauge Data																															
Alarms																															
Secondary Containment																															
Inspector's Initials																															

Comments

August 1998

DAILY INSPECTION LOG - HAZARDOUS WASTE TANKS

Plant _____
Month _____
Tank ID _____

Date	1	2	3	4	5	6	7	8	9	10	11	12	13	14	15	16	17	18	19	20	21	22	23	24	25	26	27	28	29	30	31
Tanks																															
General Condition			✓	✓	✓	✓	✓			✓	✓	✓	✓	✓			✓	✓	✓	✓	✓			✓			✓	✓	✓	✓	✓
Seams			✓	✓	✓	✓	✓			✓	✓	✓	✓	✓			✓	✓	✓	✓	✓			✓			✓	✓	✓	✓	
Hatways, connections, gaskets			✓	✓	✓	✓	✓			✓	✓	✓	✓	✓			✓	✓	✓	✓	✓			✓			✓	✓	✓	✓	✓
Foundation			✓	✓	✓	✓	✓			✓	✓	✓	✓	✓			✓	✓	✓	✓	✓			✓			✓	✓	✓	✓	✓
Piping																															
All Aboveground Piping and Connections			✓	✓	✓	✓	✓			✓	✓	✓	✓	✓			✓	✓	✓	✓	✓			✓			✓	✓	✓	✓	✓
Pumps			✓	✓	✓	✓	✓			✓	✓	✓	✓	✓			✓	✓	✓	✓	✓			✓			✓	✓	✓	✓	✓
													Auto Dry Arround pump																		
Overfill/Spill Control Equipment																															
Level Controls			✓	✓	✓	✓	✓			✓	✓	✓	✓	✓			✓	✓	✓	✓	✓			✓			✓	✓	✓	✓	✓
Temp. Gauge Data			✓	✓	✓	✓	✓			✓	✓	✓	✓	✓			✓	✓	✓	✓	✓			✓			✓	✓	✓	✓	✓
Pressure Gauge Data			✓	✓	✓	✓	✓			✓	✓	✓	✓	✓			✓	✓	✓	✓	✓			✓			✓	✓	✓	✓	✓
Alarms			✓	✓	✓	✓	✓			✓	✓	✓	✓	✓			✓	✓	✓	✓	✓			✓					✓	✓	✓
Secondary Containment			✓	✓	✓	✓	✓			✓	✓	✓	✓	✓			✓	✓	✓	✓	✓			✓			✓	✓	✓	✓	✓
Inspector's Initials			MM	MM	MM	MM	MM			MM	MM	MM	MM	MM			MM	MM	MM	MM	MM			MM			MM	MM	MM	MM	MM

Comments

July 90

DAILY INSPECTION LOG - HAZARDOUS WASTE TANKS

Plant _____
Month _____
Tank ID _____

Date	1	2	3	4	5	6	7	8	9	10	11	12	13	14	15	16	17	18	19	20	21	22	23	24	25	26	27	28	29	30	31
Tanks																															
General Condition	✓	✓	✓			✓	✓	✓	✓	✓			✓	✓	✓	✓	✓			✓	✓	✓	X	✓			✓	✓	✓	✓	✓
Seams	✓	✓				✓	✓	✓	✓	✓			✓	✓	✓	✓	✓			✓	✓	✓	X	✓			✓	✓	✓	✓	✓
Hanways, connections, gaskets	✓	✓				✓	✓	✓	✓	✓			✓	✓	✓	✓	✓			✓	✓	✓	X	✓			✓	✓	✓	✓	✓
Foundation	✓	✓				✓	✓	✓	✓	✓			✓	✓	✓	✓	✓			✓	✓	✓	X	✓			✓	✓	✓	✓	✓
Piping																															
All Aboveground Piping and Connections	✓	✓				✓	✓	✓	✓	✓			✓	✓	✓	✓	✓			✓	✓	✓	X	K			✓	✓	✓	✓	✓
Pumps	✓	✓				✓	✓	✓	✓	✓			✓	✓	✓	✓	✓			✓	✓	✓	X	✓			✓	✓	✓	✓	✓
Overfill/Spill Control Equipment																															
Level Controls	✓	✓				✓	✓	✓	✓	✓			✓	✓	✓	✓	✓			✓	✓	✓	X	✓			✓	✓	✓	✓	✓
Temp. Gauge Data	✓	✓				✓	✓	✓	✓	✓			✓	✓	✓	✓	✓			✓	✓	✓	X	✓			✓	✓	✓	✓	✓
Pressure Gauge Data	✓	✓				✓	✓	✓	✓	✓			✓	✓	✓	✓	✓			✓	✓	✓	X	✓			✓	✓	✓	✓	✓
Alarms	✓	✓				✓	✓	✓	✓	✓			✓	✓	✓	✓	✓			✓	✓	—	—	✓			✓	✓	✓	✓	✓
Secondary Contain...	✓	✓				✓	✓	✓	✓	✓			✓	✓	✓	✓	✓			✓	✓	✓	X	✓			✓	✓	✓	✓	✓
Inspector's Initials	[illegible]	[illegible]				[illegible]	[illegible]	[illegible]	[illegible]	[illegible]			[illegible]	[illegible]	[illegible]	[illegible]	[illegible]			[illegible]	[illegible]	[illegible]	[illegible]				[illegible]	[illegible]	[illegible]	[illegible]	[illegible]

Comments

Pump Not Running

June 1998

DAILY INSPECTION LOG - HAZARDOUS WASTE TANKS

Plant _____
Month _____
Tank ID _____

Date	1	2	3	4	5	6	7	8	9	10	11	12	13	14	15	16	17	18	19	20	21	22	23	24	25	26	27	28	29	30	31
Tanks																															
General Condition	✓	✓	✓	✓	✓			✓	✓	✓	✓	✓			✓	✓	✓	✓	✓			✓	✓	✓	✓	✓	✓	✓	✓	✓	✓
Seams	✓	✓	✓	✓	✓			✓	✓	✓	✓	✓			✓	✓	✓	✓	✓			✓	✓	✓	✓	✓	✓	✓	✓	✓	✓
Manways, connections, gaskets	✓	✓	✓	✓	✓			✓	✓	✓	✓	✓			✓	✓	✓	✓	✓			✓	✓	✓	✓	✓	✓	✓	✓	✓	✓
Foundation	✓	✓	✓	✓	✓			✓	✓	✓	✓	✓			✓	✓	✓	✓	✓			✓	✓	✓	✓	✓	✓	✓	✓	✓	✓
Piping																															
All Aboveground Piping and Connections	✓	✓	✓	✓	✓			✓	✓	✓	✓	✓			✓	✓	✓	✓	✓			✓	✓	✓	✓	✓	✓	✓	✓	✓	✓
Pumps	✓	✓	✓	✓	✓			✓	✓	✓	✓	✓			✓	✓	✓	✓	✓			✓	✓	✓	✓	✓	✓	✓	✓	✓	✓
Overfill/Spill Control Equipment																															
Level Controls	✓	✓	✓	✓	✓			✓	✓	✓	✓	✓			✓	✓	✓	✓	✓			✓	✓	✓	✓	✓	✓	✓	✓	✓	✓
Temp. Gauge Data	✓	✓	✓	✓	✓			✓	✓	✓	✓	✓			✓	✓	✓	✓	✓			✓	✓	✓	✓	✓	✓	✓	✓	✓	✓
Pressure Gauge Data	✓	✓	✓	✓	✓			✓	✓	✓	✓	✓			✓	✓	✓	✓	✓			✓	✓	✓	✓	✓	✓	✓	✓	✓	✓
Alarms	✓	✓	✓	✓	✓			✓	✓	✓	✓	✓			✓	✓	✓	✓	✓			✓	✓	✓	✓	✓	✓	✓	✓	✓	✓
Secondary Containment	✓	✓	✓	✓	✓			✓	✓	✓	✓	✓			✓	✓	✓	✓	✓			✓	✓	✓	✓	✓	✓	✓	✓	✓	✓
Inspector's Initials	[illegible]	[illegible]	[illegible]	[illegible]	[illegible]			[illegible]	[illegible]	[illegible]	[illegible]	[illegible]			[illegible]	[illegible]	[illegible]	[illegible]	[illegible]			[illegible]	[illegible]	[illegible]	[illegible]	[illegible]	[illegible]	[illegible]	[illegible]	[illegible]	[illegible]

Comments

May 1998

DAILY INSPECTION LOG - HAZARDOUS WASTE TANKS

Plant _____
Month _____
Tank ID _____

Date	1	2	3	4	5	6	7	8	9	10	11	12	13	14	15	16	17	18	19	20	21	22	23	24	25	26	27	28	29	30	31
Tanks																															
General Condition	✓			✓	✓	✓	✓	✓			✓	✓	✓	✓	✓			✓	✓	✓	✓	✓				✓	✓	✓	✓		
Seams	✓			✓	✓	✓	✓	✓			✓	✓	✓	✓	✓			✓	✓	✓	✓	✓				✓	✓	✓	✓		
Manways, connections, gaskets	✓			✓	✓	✓	✓	✓			✓	✓	✓	✓	✓			✓	✓	✓	✓	✓				✓	✓	✓	✓		
Foundation	✓			✓	✓	✓	✓	✓			✓	✓	✓	✓	✓			✓	✓	✓	✓	✓				✓	✓	✓	✓		
Piping																															
All Aboveground Piping and Connections	✓			✓	✓	✓	✓	✓			✓	✓	✓	✓	✓			✓	✓	✓	✓	✓				✓	✓	✓	✓		
Pumps	✓			✓	✓	✓	✓	✓			✓	✓	✓	✓	✓			✓	✓	✓	✓	✓				✓	✓	✓	✓		
Overfill/Spill Control Equipment																															
Level Controls	✓			✓	✓	✓	✓	✓			✓	✓	✓	✓	✓			✓	✓	✓	✓	✓				✓	✓	✓	✓		
Temp. Gauge Data	✓			✓	✓	✓	✓	✓			✓	✓	✓	✓	✓			✓	✓	✓	✓	✓				✓	✓	✓	✓		
Pressure Gauge Data	✓			✓	✓	✓	✓	✓			✓	✓	✓	✓	✓			✓	✓	✓	✓	✓				✓	✓	✓	✓		
Alarms	✓			✓	✓	✓	✓	✓			✓	✓	✓	✓	✓			✓	✓	✓	✓	✓				✓	✓	✓	✓		
Secondary Containment	✓			✓	✓	✓	✓	✓			✓	✓	✓	✓	✓			✓	✓	✓	✓	✓				✓	✓	✓	✓		
Inspector's Initials	[illegible]			[illegible]	[illegible]	[illegible]	[illegible]	[illegible]			[illegible]	[illegible]	[illegible]	[illegible]	[illegible]			[illegible]	[illegible]	[illegible]	[illegible]	[illegible]				[illegible]	[illegible]	[illegible]	[illegible]		

Comments

April 1998

DAILY INSPECTION LOG - HAZARDOUS WASTE TANKS

Plant _____
Month _____
Tank ID _____

Date	1	2	3	4	5	6	7	8	9	10	11	12	13	14	15	16	17	18	19	20	21	22	23	24	25	26	27	28	29	30	31
Tanks																															
General Condition																															
Seams																															
Manways, connections, gaskets																															
Foundation																															
Piping																															
All Aboveground Piping and Connections																															
Pumps																															
Overfill/Spill Control Equipment																															
Level Controls																															
Temp. Gauge Data																															
Pressure Gauge Data																															
Alarms																															
Secondary Containment																															
Inspector's Initials																															

Comments

March 1998

DAILY INSPECTION LOG - HAZARDOUS WASTE TANKS

Plant _____
Month _____
Tank ID _____

Date	1	2	3	4	5	6	7	8	9	10	11	12	13	14	15	16	17	18	19	20	21	22	23	24	25	26	27	28	29	30	31
Tanks																															
General Condition		✓	✓	✓	✓	✓																									
Seams		✓	✓	✓	✓	✓																									
Manways, connections, gaskets		✓	✓	✓	✓	✓																									
Foundation		✓	✓	✓	✓	✓																									
Piping																															
All Aboveground Piping and Connections		✓	✓	✓	✓	✓																									
Pumps		✓	✓	✓	✓	✓																									
Overfill/Spill Control Equipment																															
Level Controls		✓	✓	✓	✓	✓																									
Temp. Gauge Data		✓	✓	✓	✓	✓																									
Pressure Gauge Data		✓	✓	✓	✓	✓																									
Alarms		✓	✓	✓	✓	✓																									
Secondary Containment		✓	✓	✓	✓	✓																									
Inspector's Initials		BS	BS	BS	BS	BS																									

Comments

Feb 1998

DAILY INSPECTION LOG - HAZARDOUS WASTE TANKS

Plant _____
Month _____
Tank ID _____

Date	1	2	3	4	5	6	7	8	9	10	11	12	13	14	15	16	17	18	19	20	21	22	23	24	25	26	27	28	29	30	31
Tanks																															
General Condition		✓																													
Seams		✓																													
Manways, connections, gaskets		✓																													
Foundation		✓																													
2-2-98 Auto Dry on Floor under pump																															
Piping																															
All Aboveground Piping and Connections		✓																													
Pumps		✓																													
Overfill/Spill Control Equipment																															
Level Controls		✓																													
Temp. Gauge Data		✓																													
Pressure Gauge Data		✓																													
Alarms		✓																													
Secondary Containment																															
Inspector's Initials		MF	B	B	B	B			B	B	B	B	B			B	B	B													
Comments																															

DAILY INSPECTION LOG - HAZARDOUS WASTE TANKS

Plant _____
Month _____
Tank ID _____

Date	1	2	3	4	5	6	7	8	9	10	11	12	13	14	15	16	17	18	19	20	21	22	23	24	25	26	27	28	29	30	31
Tanks																															
General Condition					✓	✓	✓	✓	✓			✓	✓	✓	✓	✓	✓		✓	✓											
Seams					✓	✓	✓	✓	✓			✓	✓	✓	✓	✓	✓		✓	✓											
Hatways, connections, gaskets					✓	✓	✓	✓	✓			✓	✓	✓	✓	✓	✓		✓	✓											
Foundation					✓	✓	✓	✓	✓			✓	✓	✓	✓	✓	✓		✓	✓											
Piping																															
All Aboveground Piping and Connections			✓		✓	✓	✓	✓	✓			✓	✓	✓	✓	✓	✓		✓	✓											
Pumps					✓	✓	✓	✓	✓			✓	✓	✓	✓	✓	✓		✓	✓											
Overfill/Spill Control Equipment																															
Level Controls					✓	✓	✓	✓	✓			✓	✓	✓	✓	✓	✓		✓	✓											
Temp. Gauge Data					✓	✓	✓	✓	✓			✓	✓	✓	✓	✓	✓		✓	✓											
Pressure Gauge Data					✓	✓	✓	✓	✓			✓	✓	✓	✓	✓	✓		✓	✓											
Alarms					✓	✓	✓	✓	✓			✓	✓	✓	✓	✓	✓		✓	✓											
Secondary Containment					✓	✓	✓	✓	✓			✓	✓	✓	✓	✓	✓		✓	✓											
Inspector's Initials					[illegible]	[illegible]	[illegible]	[illegible]	[illegible]			[illegible]	[illegible]	[illegible]	[illegible]	[illegible]	[illegible]		[illegible]	[illegible]											

Comments

Dec 1999

DAILY INSPECTION LOG - HAZARDOUS WASTE TANKS

Plant _____
Month _____
Tank ID _____

Date	1	2	3	4	5	6	7	8	9	10	11	12	13	14	15	16	17	18	19	20	21	22	23	24	25	26	27	28	29	30	31
Tanks																															
General Condition	✓	✓	✓	✓	✓			✓	✓	✓	✓	✓			✓	✓	✓	✓	✓			✓									
Seams	✓	✓	✓	✓	✓			✓		✓	✓	✓			✓	✓	✓	✓	✓			✓									
Manways, connections, gaskets	✓	✓	✓	✓	✓			✓	✓	✓	✓	✓			✓	✓	✓	✓	✓			✓									
Foundation	✓	✓	✓	✓	✓			✓	✓	✓	✓	✓			✓	✓	✓	✓	✓			✓									
Piping																															
All Aboveground Piping and Connections	✓	✓	✓	✓	✓			✓	✓	✓	✓	✓			✓	✓	✓	✓	✓			✓									
Pumps	✓	✓	✓	✓	✓			✓	✓	✓	✓	✓			✓	✓	✓	✓	✓			✓									
Overfill/Spill Control Equipment																															
Level Controls	✓	✓	✓	✓	✓			✓	✓	✓	✓	✓			✓	✓	✓	✓	✓			✓									
Temp. Gauge Data	✓	✓	✓	✓	✓			✓	✓	✓	✓	✓			✓	✓	✓	✓	✓			✓									
Pressure Gauge Data	✓	✓	✓	✓	✓			✓	✓	✓	✓	✓			✓	✓	✓	✓	✓			✓									
Alarms	✓	✓	✓	✓	✓			✓	✓	✓	✓	✓			✓	✓	✓	✓	✓			✓									
Secondary Containment	✓	✓	✓	✓	✓			✓	✓	✓	✓	✓			✓	✓	✓	✓	✓			✓									
Inspector's Initials	BK	BK	BK	BK	BK			BK	BK	BK	BK	BK			BK	BK	BK	BK	BK			BK									

Comments

Nov 1997

DAILY INSPECTION LOG - HAZARDOUS WASTE TANKS

Plant _____
Month _____
Tank ID _____

Date	1	2	3	4	5	6	7	8	9	10	11	12	13	14	15	16	17	18	19	20	21	22	23	24	25	26	27	28	29	30	31
Tanks																															
General Condition			✓	✓	✓	✓			✓	✓	✓	✓	✓			✓	✓	✓	✓	✓			✓	✓	✓						
Seams			✓	✓	✓	✓			✓	✓	✓	✓	✓			✓	✓	✓	✓	✓			✓	✓	✓						
Manways, connections, gaskets			✓	✓	✓	✓			✓	✓	✓	✓	✓			✓	✓	✓	✓	✓			✓	✓	✓						
Foundation			✓	✓	✓	✓			✓	✓	✓	✓	✓			✓	✓	✓	✓	✓			✓	✓	✓						
Piping																															
All Aboveground Piping and Connections			✓	✓	✓	✓			✓	✓	✓	✓	✓			✓	✓	✓	✓	✓			✓	✓	✓						
Pumps			✓	✓	✓	✓			✓	✓	✓	✓	✓			✓	✓	✓	✓	✓			✓	✓	✓						
Overfill/Spill Control Equipment																															
Level Controls			✓	✓	✓	✓			✓	✓	✓	✓	✓			✓	✓	✓	✓	✓			✓	✓	✓						
Temp. Gauge Data			✓	✓	✓	✓			✓	✓	✓	✓	✓			✓	✓	✓	✓	✓			✓	✓	✓						
Pressure Gauge Data			✓	✓	✓	✓			✓	✓	✓	✓	✓			✓	✓	✓	✓	✓			✓	✓	✓						
Alarms			✓	✓	✓	✓			✓	✓	✓	✓	✓			✓	✓	✓	✓	✓			✓	✓	✓						
Secondary Containment			✓	✓	✓	✓			✓	✓	✓	✓	✓			✓	✓	✓	✓	✓			✓	✓	✓						
Inspector's Initials			[illegible]	[illegible]	[illegible]	[illegible]			[illegible]	[illegible]	[illegible]	[illegible]	[illegible]			[illegible]	[illegible]	[illegible]	[illegible]	[illegible]			[illegible]	[illegible]	[illegible]						

Comments

Oct 1997

DAILY INSPECTION LOG - HAZARDOUS WASTE TANKS

Plant _____
Month _____
Tank ID _____

Date	1	2	3	4	5	6	7	8	9	10	11	12	13	14	15	16	17	18	19	20	21	22	23	24	25	26	27	28	29	30	31
Tanks																															
General Condition																															
Seams																															
Manways, connections, gaskets																															
Foundation																															
Piping																															
All Aboveground Piping and Connections																															
Pumps																															
Overfill/Spill Control Equipment																															
Level Controls																															
Temp. Gauge Data																															
Pressure Gauge Data																															
Alarms																															
Secondary Containment																															
Inspector's Initials																															

Comments

Sept 97

DAILY INSPECTION LOG - HAZARDOUS WASTE TANKS

Plant _____
Month _____
Tank ID _____

Date	1	2	3	4	5	6	7	8	9	10	11	12	13	14	15	16	17	18	19	20	21	22	23	24	25	26	27	28	29	30	31
Tanks																															
General Condition		✓	✓	✓	✓			✓	✓	✓	✓	✓			✓	✓	✓	✓	✓			✓	✓	✓	✓	✓			✓	✓	
Seams		✓	✓	✓	✓			✓	✓	✓	✓	✓			✓	✓	✓	✓	✓			✓	✓	✓	✓	✓			✓	✓	
Manways, connections, gaskets		✓	✓	✓	✓			✓	✓	✓	✓	✓			✓	✓	✓	✓	✓			✓	✓	✓	✓	✓			✓	✓	
Foundation		✓	✓	✓	✓			✓	✓	✓	✓	✓			✓	✓	✓	✓	✓			✓	✓	✓	✓	✓			✓	✓	
Piping																															
All Aboveground Piping and Connections		✓	✓	✓	✓			✓	✓	✓	✓	✓			✓	✓	✓	✓	✓			✓	✓	✓	✓	✓			✓	✓	
Pumps		✓	✓	✓	✓			✓	✓	✓	✓	✓			✓	✓	✓	✓	✓			✓	✓	✓	✓	✓			✓	✓	
Overfill/Spill Control Equipment																															
Level Controls		✓	✓	✓	✓			✓	✓	✓	✓	✓			✓	✓	✓	✓	✓			✓	✓	✓	✓	✓			✓	✓	
Temp. Gauge Data		✓	✓	✓	✓			✓	✓	✓	✓	✓			✓	✓	✓	✓	✓			✓	✓	✓	✓	✓			✓	✓	
Pressure Gauge Data		✓	✓	✓	✓			✓	✓	✓	✓	✓			✓	✓	✓	✓	✓			✓	✓	✓	✓	✓			✓	✓	
Alarms		✓	✓	✓	✓			✓	✓	✓	✓	✓			✓	✓	✓	✓	✓			✓	✓	✓	✓	✓			✓	✓	
Secondary Containment		✓	✓	✓	✓			✓	✓	✓	✓	✓			✓	✓	✓	✓	✓			✓	✓	✓	✓	✓			✓	✓	
Inspector's Initials		[illegible]	[illegible]	[illegible]	[illegible]			[illegible]	[illegible]	[illegible]	[illegible]	[illegible]			[illegible]	[illegible]	[illegible]	[illegible]	[illegible]			[illegible]	[illegible]	[illegible]	[illegible]	[illegible]			[illegible]	[illegible]	

Comments

Aug 1997

DAILY INSPECTION LOG - HAZARDOUS WASTE TANKS

Plant _____
Month _____
Tank ID _____

Date	1	2	3	4	5	6	7	8	9	10	11	12	13	14	15	16	17	18	19	20	21	22	23	24	25	26	27	28	29	30	31
Tanks																															
General Condition																															
Seams																															
Manways, connections, gaskets																															
Foundation																															
Piping																															
All Aboveground Piping and Connections																															
Pumps																															
Overfill/Spill Control Equipment																															
Level Controls																															
Temp. Gauge Data																															
Pressure Gauge Data																															
Alarms																															
Secondary Containment																															
Inspector's Initials																															

Comments

DAILY INSPECTION LOG - HAZARDOUS WASTE TANKS

Plant _____
Month _____
Tank ID _____

Date	1	2	3	4	5	6	7	8	9	10	11	12	13	14	15	16	17	18	19	20	21	22	23	24	25	26	27	28	29	30	31
Tanks																															
General Condition			✓				✓	✓	✓	✓	✓			✓	✓	✓	✓	✓				✓						✓	✓	✓	✓
Seams			✓				✓	✓	✓	✓	✓			✓	✓	✓	✓	✓				✓						✓	✓	✓	✓
Manways, connections, gaskets			✓				✓	✓	✓	✓	✓			✓	✓	✓	✓	✓				✓						✓	✓	✓	✓
Foundation			✓				✓	✓	✓	✓	✓			✓	✓	✓	✓	✓				✓						✓	✓	✓	✓
Piping																															
All Aboveground Piping and Connections			✓				✓	✓	✓	✓	✓			✓	✓	✓	✓	✓				✓						✓	✓	✓	✓
Pumps			✓				✓	✓	✓	✓	✓			✓	✓	✓	✓	✓				✓						✓	NOT working	✓	✓
Overfill/Spill Control Equipment																															
Level Controls			✓				✓	✓	✓	✓	✓			✓	✓	✓	✓	✓				✓						✓	✓	✓	✓
Temp. Gauge Data			✓				✓	✓	✓	✓	✓			✓	✓	✓	✓	✓				✓						✓	✓	✓	✓
Pressure Gauge Data			✓				✓	✓	✓	✓	✓			✓	✓	✓	✓	✓				✓						✓	✓	✓	✓
Alarms			✓				✓	✓	✓	✓	✓			✓	✓	✓	✓	✓				✓						✓	✓	✓	✓
Secondary Containment			✓				✓	✓	✓	✓	✓			✓	✓	✓	✓	✓				✓						✓	✓	✓	✓
Inspector's Initials																															

Comments