REMEDIAL DESIGN WORK PLAN – FORD ROAD LANDFILL

Prepared for

The Ford Road Landfill Settling Parties

April 2010

REMEDIAL DESIGN WORK PLAN – FORD ROAD LANDFILL

Prepared for
The Ford Road Landfill Settling Parties
April 2010

Prepared by:

Brown and Caldwell

4700 Lakehurst Court, Suite 100

Dublin, Ohio 43016

August 2009

Revision 1 – April 2010

137335.300.050

BROWN AND CALDWELL

4700 Lakehurst Court, Suite 100

Dublin, Ohio 43016

TABLE OF CONTENTS

1. INTRODUCTION....1-1
1.1 Background....1-1
1.2 Organization of the RD Work Plan....1-2

2. REMEDIAL DESIGN MANAGEMENT AND SCHEDULE....2-1
2.1 Management Strategy....2-1
2.2 Schedule of RD Activities....2-1

3. PREVIOUS SITE INVESTIGATIONS....3-1
3.1 Previous Site Investigations....3-1
3.1.1 Sanitary Landfill Inspection (OEPA), December 21, 1972....3-1
3.1.2 Site Inspection Reports (USEPA), September 30, 1980....3-1
3.1.3 Evaluation for Potential Groundwater Contamination (USEPA), October 16, 1981....3-2
3.1.4 Preliminary Assessment Report (USEPA), January 5, 1983....3-2
3.1.5 Site Inspection Report (USEPA), July 29, 1983....3-2
3.1.6 Expanded Site Inspection Report (PRC), January 10, 1994....3-2
3.1.7 BFIO Landfill Gas Monitoring, February 8, 1989 through January 31, 1994, On-Going Gas Monitoring by the Park District....3-2
3.1.8 Remedial Investigation/Feasibility Study (Blasland, Bouck, and Lee, Inc), March, 2006....3-3
3.2 Summary of Site Conditions....3-3
3.2.1. Climate and Weather....3-3
3.2.2 Topography....3-3
3.2.3 Geology....3-4
3.2.4 Surface Water....3-4
3.2.5 Groundwater....3-5
3.3 Summary of Site Chemical Data....3-6
3.3.1 Chemicals of Concern....3-6
3.3.2 HCOPCs in Soil....3-7
3.3.3 Landfill Gas....3-7
3.3.4 Leachate....3-8
3.3.5 Groundwater....3-8
3.3.6 Surface Water....3-9
3.3.7 Sediment....3-9
3.4 Ecological Data....3-10
3.5 Engineering Data....3-11
3.5.1 Cover Thickness Evaluation....3-11
3.5.2 Slope Stability Evaluation....3-12
3.6 Remedial Design Parameters, Restrictions, and Objectives....3-12
3.6.1 Remedial Actions....3-12
3.6.2 ARARs....3-14

3.7 Design and Performance Criteria....3-14
3.7.1 Short-Term Monitoring/Testing....3-14
3.7.2 Long-Term Monitoring and Operating Requirements....3-17
3.8 Health and Safety Considerations....3-17
3.8.1 Training for Site Personnel....3-18
3.8.2 Topography and Vegetation....3-18
3.8.3 Trenching and Excavation....3-18
3.8.4 Potential Chemicals of Concern....3-18
3.8.5 Sanitation....3-19

4. ADDITIONAL TESTING/TREATABILITY TESTING....4-1
4.1 Identified Data Gaps....4-1
4.2 Soil Cover Thickness Evaluation for the Upper Surface....4-2
4.3 Soil Cover Thickness on the East Slope....4-2
4.4 Geotechnical Investigation of the Base Soil....4-2
4.5 Current Leachate Level in the Landfill....4-3
4.6 Slope Stability Evaluation....4-4
4.6.1 OEPA GeoRG Manual Guidance....4-6
4.7 Field Data Quality Objectives....4-6

5. PRELIMINARY DESIGN....5-1
5.1 Design Criteria....5-1
5.2 Results of Treatability Studies....5-1
5.3 Results of Additional Field Sampling and Pre-Design Work....5-1
5.4 Project Delivery Strategy....5-1
5.5 Preliminary Plans, Drawings, and Sketches for the Landfill....5-1
5.6 Preliminary Plans, Drawings, and Sketches for the Soil Removal Area....5-2
5.7 Outline of Required Specifications....5-2
5.8 Preliminary Construction Schedule....5-2
5.9 Proposed Cleanup Verification Methods....5-2
5.10 Proposed Citing/Locations or Processes/Construction Activities....5-2
5.11 Real Estate, Easement, Restrictive Covenant, and Permit Requirements....5-2
5.12 QAPP Update....5-3
5.13 HASP Update....5-3
5.14 FSP Update....5-3
5.15 Contingency Plan Update....5-3
5.16 Construction Quality Assurance Plan....5-3
5.17 Responsibilities & Authorities....5-5
5.18 Qualifications of the Quality Assurance Official....5-5
5.19 Protocols for Sampling and Testing....5-5
5.20 Identification of Proposed Quality Assurance Sampling Activities and Evaluation....5-5
5.21 Description of Final Records Storage....5-5

6. PRE-FINAL AND FINAL DESIGN PLANS AND SPECIFICATIONS....6-1

6.1 Final Plans and Specifications 6-1
6.2 Surface Water Management Plan 6-1
6.3 Draft O&M Plan 6-3
6.4 Construction QA Plan 6-5
6.5 Contingency Plan 6-6
6.6 Performance Standards Verification Plan 6-6

7. SUPPORTING SOW TASKS 7-1
7.1 Plan to Limit Potential Access/Human Exposure 7-1
7.2 Institutional Controls 7-2
7.3 Long-Term Maintenance and Post-Closure Care 7-2

8. REFERENCES 8-1

LIST OF FIGURES

Figure 1-1. Site Location
Figure 1-2. Site Plan
Figure 2-1. Project Schedule - Remedial Design Services
Figure 3-1. Proposed Geoprobe Soil Boring Locations
Figure 4-1. Proposed Side Slope Soil Boring Locations
Figure 4-2. Proposed Perimeter Soil Boring Locations
Figure 5-1. LNAPL Area

LIST OF TABLES

Table 3-1. Summary of Hydraulic Conductivity
Table 3-2. Summary of Geotechnical Results
Table 3-3. Chemical-Specific ARARs and TBCs
Table 3-4. Action-Specific ARARs and TBCs
Table 3-5. Location-Specific ARARs and TBCs

LIST OF APPENDICES

APPENDIX A. Field Sampling Plan ..... A
APPENDIX B. quality Assurance Program Plan ..... B
APPENDIX C. Health and Safety Plan and Contingency Plan C
APPENDIX D. Technical Assistance Plan ..... D

1. INTRODUCTION

This Remedial Design (RD) Work Plan is submitted on behalf of the Ford Road Settling Defendants (Settling Parties) to meet the requirement of the Consent Decree 08-CV-03026-AA (CD), signed by USEPA and the Settling Parties, and entered by the Court on February 18, 2009, and the Statement of Work (SOW) and Record of Decision (ROD) for the Ford Road Landfill CERCLA Site (Site). This RD Work Plan provides for design of the remedy for the Site as set forth in the ROD, SOW and CD for achievement of the Performance Standards and other requirements. Upon its approval by USEPA, this RD Work Plan will be incorporated into and become enforceable under the CD.

The objective of the RD is to prepare plans and specifications for the implementation of the Remedial Actions (RAs) at the Ford Road Landfill that meet the criteria for site remediation as described in the ROD, SOW and CD. The RD will be completed in accordance with the Superfund Remedial Design and Remedial Action (RD/RA) Guidance (OSWER Directive No. 9355.0-4A). This RD Work Plan includes plans and schedules for implementation of all RD and pre-design tasks identified in the SOW. In addition, the RD Work Plan includes a schedule for completion of the RA Work Plan.

The draft RD Work Plan was submitted to the USEPA on August 27, 2009. USEPA provided comments regarding the RD Work Plan on October 1, 2009. In order to complete the RD Field Work during 2009 (prior to winter conditions) comments pertaining to the field investigation were addressed first. Responses to these comments were provided by the Settling Parties on October 16, 2009 and conditional authorization to proceed with the field work was provided on October 20, 2009. The field work was completed during the period between October 26 and November 6, 2009.

Following approval of this RD Work Plan by USEPA, the remainder of the RD Work Plan will be implemented and the Settling Parties will submit to USEPA and the State all plans, submittals and other required deliverables in accordance with the approved schedule provided in the RD Work Plan.

1.1 Background

The Site is a 15-acre inactive facility located in the City of Elyria within Lorain County, Ohio. The Site is located on the northern edge of Elyria adjacent to Ford Road, about 1.5 miles from interchange 8 of the Ohio Turnpike/Interstate 90 (Figure 1-1). There are approximately 2,500 people living within a one-mile radius of the Site. The nearest resident is approximately 200 feet northwest of the Site. The current owner of the Site is the Lorain County Metropolitan Parks District (the Park District).

An intermittent stream and a sewer main that is covered with rip-rap are present to the north of the landfill and a ravine and rural land are present to the south. The Black River is located relatively close to the east side of the landfill and the west side is bordered by Ford Road, and beyond Ford Road to the west is the Black River Preserve (a Park District Park). The approximate geographic coordinates of the Site are 41° 22' 26.0" N latitude and 082° 07' 30.0" W longitude. The USEPA spill identification number is 0574, and the USEPA facility identification number is OHD 980510002. Figure 1-2 presents a site plan indicating Site features and previous sample locations.

The Remedial Investigation and Feasibility Study (RI/FS) and the ROD conclude that the slopes at the former landfill appear to be stable. The steeper slopes at the landfill have remained in their current position for more than 35 years without evidence of slope failure aside from minor solifluction and

slumping of surface soil. The majority of the former landfill appears to have an adequate cover of low-permeability soil. Landfill wastes are largely covered, with the exception of some wastes, miscellaneous debris, and white goods that are located along the southern and northern landfill flanks. The landfill top is well graded and gently slopes southwest to northeast. A portion of the eastern side slope has a grade of approximately 2:1, horizontal to vertical (H:V), while the northern and southern portions of the east side slopes and the north and south side slopes are steeper, with maximum grades of approximately 1.2:1. The upper, gently-sloping portion of the landfill supports a dense growth of grass that is well maintained. The side slopes are generally covered with a dense growth of mature trees.

Prior to the start of landfill activities, the area sloped gently toward the river and included a wider flood plain than what is currently present. Much of the sloped area has been filled to approximately the same level as Ford Road, and a portion of the flood plain was incorporated into the landfill. Land-filling activities are believed to have begun with the placing of local municipal waste extending east from Ford Road in the early 1900s. The Site operated as a public landfill, charging tipping fees, until 1964. The Site was leased in 1964 and operated by several entities as a landfill until June 1974. During operation of the landfill in the 1960s and 1970s, municipal and industrial wastes in drums and in bulk were accepted, including, but not limited to: 700 tons of hazardous material; 3.3 million pounds of chemical wastes; and sludge (reportedly 32,000 gallons per day), from 1963 to 1970. Many of these wastes were burned onsite. Foundry sand, slag, and dried sludges were often used for cover material. Landfill operations ended in 1974.

Environmental officials conducted several investigations over the years at the Site and found that leachate was seeping from the landfill. Leachate was found to be discharging into the Black River by Ohio EPA (OEPA) and the Elyria City Department of Health during an inspection completed in 1972. The leachate was sampled in 1980 and found to contain a variety of potentially hazardous substances.

In 1980, with the approval of USEPA and the Park District, a former operator implemented a voluntary response action involving the addition and grading of cover soil (including placing up to 7.5 feet of low-permeability cover materials) to intercept and contain reported observations of leachate emanating from the Site. In addition, some refuse observed near the river was removed and transported to the Lorain County Landfill.

On March 8, 1993, a USEPA contractor, PRC Environmental Management, Inc. (PRC), inspected the Site. PRC found a leachate seep draining toward the Black River near the northeast corner of the Site. On May 18, 1993, PRC sampled soil, surface water, sediment and groundwater at the Site. PRC completed an Expanded Site Inspection report dated January 10, 1994, discussing the results of their investigation and previous investigations.

During July 2002, USEPA Region 5 and the Settling Parties entered into an Administrative Order on Consent which required the Settling Parties to conduct a RI/FS to investigate the nature and extent of contamination at the Site and develop and evaluate potential remedial alternatives pursuant to 40 CFR Part 300.430. The RI/FS was performed by Blasland, Bouck & Lee, Inc. (BBL) between 2003 and 2006 and was approved by USEPA in May 2006. USEPA executed a ROD in September 2006 and a CD and SOW were negotiated during late-2008. The CD was lodged on December 30, 2008 and was entered by the Court on February 18, 2009.

1.2 Organization of the RD Work Plan

This Work Plan is organized to satisfy the requirements provided in the CD, SOW and USEPA regulatory guidance for the performance of RD and RA. Section 1 provides the context and objectives for the RD. Section 2 presents the management strategy for the RD, which includes the identification of key organizations and individuals who are inherent in the implementation of this strategy and schedule of RD activities. Section 3 presents a summary of Site conditions and data upon which the RD is based. It includes a description of

design assumptions, restrictions and performance criteria. Section 4 describes the additional data needs for the RD and the investigation required to address those data needs.

Section 5 describes the elements to be submitted as part of the Preliminary RD. Elements to be submitted as part of the Pre-final and Final RD are described in Section 6. Section 7 describes additional tasks to be performed in support of the RD as required by the CD/SOW, including a plan to limit potential human exposure, implementation of institutional controls, and long-term maintenance and Post-Closure Care. A list of references used throughout this Work Plan is presented in Section 8.

The Appendices contain supporting plans to the RD effort including required documents associated with pre-design investigation activities. The following appendices are included in this RD Work Plan:

- Appendix A: Field Sampling Plan;
- Appendix B: Quality Assurance Program Plan;
- Appendix C: Health and Safety Plan and Contingency Plan; and,
- Appendix D: Technical Assistance Plan.

2. REMEDIAL DESIGN MANAGEMENT AND SCHEDULE

The overall management strategy for performing the RD, the responsibilities of key personnel and organizations involved in the RD, and the schedule for completing the RD are provided in the following subsections.

2.1 Management Strategy

The Settling Parties are responsible for the preparation of the RD for the Site. The Technical Committee is a subset of the Settling Parties that actively manages the major functions of the group. All Settling Parties members can participate in the review of documents and decision making regarding activities completed for the remediation and management of the Site.

Patrick Steerman of Steerman Environmental Management and Consulting, LLC is the Project Coordinator for the Settling Parties and provides review of documents, monthly reports to USEPA, and general coordination of activities for the Site for the Settling Parties.

Brown and Caldwell Ohio, LLC (Brown and Caldwell) is the engineering consulting firm that has been selected to complete the RD for the Site on behalf of the Settling Parties. Within Brown and Caldwell, Ihsan Al-Fayyomi is the Regional Environmental Services Leader responsible for the consulting practice in the Midwest. James Peeples is the Project Manager for the Ford Road RD, and is directly responsible for managing and coordinating the pre-design activities and all disciplines associated with producing the RD. Mike Watkins is the Quality Manager for the field work completed by Brown and Caldwell associated with the RD.

Contractors completing work related to the RD will be subcontracted by Brown and Caldwell for such activities as soil borings, geotechnical testing, analytical work, and surveying. Brown and Caldwell will provide oversight for all subcontractors used in the completion of the RD.

2.2 Schedule of RD Activities

Figure 2-1 provides a summary of the proposed schedule for implementation of the RD and the preparation of the RA Work Plan. Key milestones in the RD process are listed below:

- USEPA Authorization to proceed — May 22, 2009
- Field Health and Safety Plan submitted — June 22, 2009
- RD Work Plan submitted — August 28, 2009
- Fencing and Signage Plan submitted — September 21, 2009
- RD Field Investigation begins — October 22, 2009
- RD Field Investigation completed — November 6, 2009
- USEPA Removed Requirement for Fencing — January 8, 2010
- Validated Data Available From RD Investigation — February 15, 2010
- USEPA Provides Conditional Approval of RDWP — March 10, 2010
- Preliminary Design Begins — March 11, 2010
- Preliminary Design completed (tentative) — June 8, 2010

- Pre-Final Design completed (tentative) January 4, 2011
- Final Design completed (tentative) March 3, 2011
- RA Work Plan submitted (tentative) June 16, 2011

The scheduling of specific activities may change due to variables such as review time and field conditions.

3. PREVIOUS SITE INVESTIGATIONS

3.1 Previous Site Investigations

Previous investigations have occurred at the Site, including the following:

- *Sanitary Landfill Inspection*, OEPA, December 21, 1972 (OEPA, 1972);
- *Site Inspection Report,* Ecology & Environment (E&E) (for USEPA), September 30, 1980 (E&E, 1980);
- *Potential for Groundwater Contamination*, E&E (for USEPA), October 16, 1981 (E&E, 1981);
- *Preliminary Assessment Report,* E&E (for USEPA), January 5, 1983 (E&E, 1983a);
- *Site Inspection Report,* E&E (for USEPA), July 20, 1983 (E&E, 1983b);
- *Expanded Site Inspection Report,* PRC Environmental Management, Inc. (for USEPA), January 10, 1994;
- *BFIO Landfill Gas Monitoring, February 8, 1989 through January 31, 1994* (BFIO, 1994);
- *On-Going Landfill Gas Monitoring by the Park District;* and
- *Remedial Investigation/Feasibility Study*, March 2006, Blasland, Bouck, and Lee, Inc (BBL, 2006).

A more complete description of these investigations is presented in the *Remedial Investigation/Feasibility Study* (BBL, 2006). A summary of each of the above investigations is presented below. Section 3.2 of this Work Plan presents a cumulative data summary of Site conditions based upon the results of these investigations.

3.1.1 Sanitary Landfill Inspection (OEPA), December 21, 1972

The sanitary landfill inspection form reported conditions observed at the landfill on December 21, 1972, by Howard Stiver of the OEPA, including the presence of leachate near the northeast corner of the landfill. It was also observed that insufficient cover material had been applied to the landfill. An inspection of the landfill in June 1976 documented improved conditions, although it indicated continued concerns regarding adequacy of cover and an observation of leachate in the northeast corner of the landfill. The 1976 report proposed remedies for the documented insufficiencies.

3.1.2 Site Inspection Reports (USEPA), September 30, 1980

On September 30, 1980, a Site inspection was performed by Robert Bartholomew of E&E on behalf of the USEPA. During the inspection, moderate leachate was reportedly observed to be entering the Black River at the northeast corner of the Site. The USEPA files contain analytical results (dated October 20, 1980) for a leachate sample and a sediment sample collected from observed seepage points located between the northeastern toe of the landfill and the Black River. The leachate sample was reported to contain detectable concentrations of ammonia, lead, boron, cadmium, zinc, barium, chromium, titanium, tetrahydrofuran, dimethylbenzene, ethylbenzene, 3,3,5-trimethylcyclohexanone, trimethylcyclohexanol, 1,1-oxybisbenzene, methylenebisbenzene, and bis(2-ethylhexyl)phthalate. The sediment sampled was reported to contain detectable levels of bis(2-ethylhexyl) phthalate, phenol, methylphenol, 1H-Indole, tetradecanediols, and polychlorinated biphenyl (PCB).

3.1.3 Evaluation for Potential Groundwater Contamination (USEPA), October 16, 1981

An Evaluation of the Potential for Groundwater Contamination at the Ford Road Site was prepared by E&E on behalf of the USEPA, dated October 16, 1981. This evaluation concluded that impacts to the deeper bedrock aquifer were unlikely due to the relatively impermeable shale cap rock. In addition, the evaluation determined that potential impacts to groundwater in the overburden could result in impact the Black River and should be evaluated by installing and sampling four to five monitoring wells.

On August 23 and 24, 1982, three shallow overburden monitoring wells (MW-1, MW-2, and MW-3) were drilled and installed by ATEC Environmental Consultants (ATEC) at the locations indicated on Figure 1-2. A borehole was also advanced upgradient of the Site; however, no groundwater was encountered above the shale bedrock and therefore no monitoring well was installed at that location.

3.1.4 Preliminary Assessment Report (USEPA), January 5, 1983

A preliminary assessment of the Site was prepared by E&E on behalf of the USEPA (E&E, 1983a). A review was completed of available information from the field investigation team (FIT) files, OEPA files, and USEPA Region 5 files. It was determined that additional information of waste quantity and current Site status was considered necessary to assess potential impact to groundwater, surface water, and/or soil.

3.1.5 Site Inspection Report (USEPA), July 29, 1983

On July 20, 1983, during a Site inspection, E&E collected groundwater samples from each of the three existing monitoring wells at the Site on behalf of the USEPA. Two of the samples were reported to contain low concentrations of acetone and alpha-benzene hexachloride (alpha-BHC). A third sample was reported to contain methylene chloride.

3.1.6 Expanded Site Inspection Report (PRC), January 10, 1994

On January 10, 1994, a USEPA contractor, PRC submitted the *Expanded Site Inspection Report* (PRC, 1994). The activities completed by PRC included an inspection of the Site on March 8, 1993, during which a leachate seep was observed flowing toward the Black River near the northeast corner of the Site. On May 18, 1993, PRC sampled soil, surface water, sediment, and groundwater at the Site. PCB (Aroclor-1254), delta-BHC, alpha chlordane, calcium, lead, and zinc were reported as detected in one or more sediment samples. No hazardous substances were identified at levels above background in surface water samples. Also, 1,l-dichloroethene, potassium, and sodium were reported as detected in one or more of the groundwater samples. Naturally occurring metals, arsenic, barium, manganese, and nickel were also detected at apparently elevated concentrations in both sediment and groundwater.

3.1.7 BFIO Landfill Gas Monitoring, February 8, 1989 through January 31, 1994, On-Going Gas Monitoring by the Park District

BFIO conducted monthly methane gas monitoring from February 8, 1989 through January 31, 1994. The work involved monitoring for methane gas at 10 locations across the landfill during each monitoring event. The monitoring results showed 0% of the lower explosive limit (LEL) and 0% by volume methane from all locations during each monitoring.

A landfill gas monitoring program developed by the Park District was formally approved by OEPA in early 2006 and sampling results have shown that no landfill gas is migrating to the property boundary.

3.1.8 Remedial Investigation/Feasibility Study (Blasland, Bouck, and Lee, Inc), March, 2006

In July 2002, USEPA and the Settling Parties entered into an Administrative Order on Consent which required the Settling Parties to conduct a Remedial Investigation and Feasibility Study (RI/FS) to investigate the nature and extent of contamination at the Site and develop and evaluate potential remedial alternatives pursuant to 40 CFR Part 300.430. The RI/FS was performed by Blasland, Bouck & Lee, Inc. (BBL) between 2003 and 2006 and was approved by USEPA in May 2006. The RI/FS is summarized in the following subsections.

3.2 Summary of Site Conditions

Much of the information regarding Site conditions was obtained and/or compiled during the Site RI/FS. A detailed description of the RI/FS investigations is provided in the *Remedial Investigation/Investigation Feasibility Study, Ford Road Landfill Site, Elyria, Lorain County, Ohio* (BBL, 2006) hereafter referred to as the RI/FS Report. The subsections below provide a summary of the Site conditions reported in the RI/FS Report and prior Site investigation.

3.2.1. Climate and Weather

The climate of Lorain County is significantly affected by Lake Erie. During the summer months, the lake has a cooling effect, and the temperature rarely reaches 100 degrees Fahrenheit (°F). Conversely, during the winter months, the modifying effects of the lake prevent temperatures in the region from falling below 0 °F, except on rare occasions (National Oceanic and Atmospheric Administration [NOAA], 2005).

The normal monthly and annual temperature and precipitation for the region is based on climatological records from the NOAA Elyria 3 E recording station for the period from 1971 to 2000. The data indicate an annual mean temperature of 51.5 °F, ranging from a daily average of 29.7 °F in January to 73.8 °F in July. The mean annual precipitation for this period was 38.02 inches, and the monthly average precipitation ranges from 2.18 inches in February to 4.07 inches in June. Annual snowfall for Elyria averages 56.9 inches based on the information provided in the city profile (www.city-data.com/city/Elyria-Ohio.html) at the time of the RI/FS Report.

3.2.2 Topography

A detailed survey of the immediate Site vicinity was completed in January 2004 to locate key Site features and characterize the topography and drainage conditions at the Site. The resulting Site Map is presented as Figure 1-2.

Site topography is characterized by the gently sloping surface of the top of the landfill which descends from an elevation of approximately 690 feet mean sea level (msl) at the western boundary of the Site along Ford Road to an elevation of approximately 680 feet msl at the top of the slope around the northern, eastern, and southern edges of the landfill surface. The northern, eastern, and southern flanks of the former landfill slope steeply down to the calculated 100-year flood plain of the Black River at an elevation of approximately 610.9 feet msl.

A swale, oriented approximately north-south, was constructed along the western edge of the gently sloping portion of the landfill to intercept surface run-off and prevent the majority of run-off from flowing down the steeply sloped sides of the landfill. The swale directs surface runoff through a pipe to a crushed stone-filled drainage feature immediately north of the Site. The drainage is directed to the Black River via this drainage feature.

3.2.3 Geology

The Site is located within the Berea Headlands section of the Huron-Erie Lake Plains physiographic region of Ohio (Brockman, 1998). The near-surface geology in the vicinity of the Site is generally characterized by the presence of glacially derived, wave-planed, ground moraine deposits from the Wisconsinan epoch and more recent lake deposits. The overburden materials encountered in the subsurface at this Site consist primarily of gray to brown silty clay and clayey silt, with trace to some sand and gravel.

Overburden materials encountered upgradient of the Site are typically glacial till deposits consisting predominantly of low permeability silt and clay. These glacial till deposits likely mantle the top of bedrock and extend down the slope toward the river under the majority of the Site. The native overburden materials encountered above the bedrock within the flood plain of the Black River are composed of a series of alluvial deposits consisting of lenses of sand, clay and silt. Groundwater flow within the overburden downgradient of the Site would be expected to preferentially follow the higher permeability sand lenses if these lenses provide a continuous pathway.

Overlying the native overburden deposits immediately beyond the northeastern toe of the landfill is a wedge of fill material composed primarily of clay and silt with some sand, broken glass, wood, and traces of slag. This wedge of fill material is approximately 10 feet thick near the toe of the landfill slope and tapers in thickness toward the bank of the river. This fill material appears to have been placed beyond the toe of the landfill in conjunction with the documented response action implemented at the request of OEPA in 1980. At the base of this wedge of fill material is a discontinuous layer of sand which appears to extend toward the edge of the river.

Bedrock was encountered in the borings at depths ranging from 12.5 to 28.5 feet below grade and is composed of red to black fissile shale. The shale bedrock formation is likely the Ohio Shale formation of Devonian age, and the red Bedford Shale formation of Mississippian age. Boring logs of wells in the general Site vicinity also observed red and black shale bedrock to depths of up to 100 feet below grade. Bedrock does not appear at the ground surface or along the bank of the Black River onsite, whereas an outcrop of red shale is evident along the access road to the south of the Site and black shale is visible in the bank of the Black River opposite the Site.

3.2.4 Surface Water

Surface water in the vicinity of the Site is dominated by the Black River. The Black River is a meandering stream that flows north, ultimately discharging into Lake Erie. It forms the eastern property boundary of the Site. The majority of surface-water runoff resulting from precipitation to the surface of the landfill likely enters the Black River either from direct overland flow or through surface water features that discharge to the Black River.

Flood stage elevations and flow velocities were calculated for the Black River in the vicinity of the Site as part of the RI. The calculations concluded that a 25-year flood would reach an elevation of 609.3 ft msl with a flow velocity of 3.2 feet/second, a 50-year flood would reach an elevation of 610.1 ft msl at 3.1 ft/s, and a 100-year flood would reach an elevation of 610.9 ft msl with a flow velocity of 3.0 ft/s.

Following the New York State Guidelines for Urban Erosion and Sediment Control and considering the flood stage elevation of 610.9 feet msl at the toe of the landfill slope, and the calculated flow velocity of 3.0 feet per second, it was concluded that a good stand of mixed grasses (e.g., such as the existing vegetation) would provide adequate protection against erosion during a 100- year flood of the Black River. Observations of erosion at the river bank that has exposed some near-surface waste material have been made in the northeast corner of the landfill. The soil and any waste material present in the northeast corner of the landfill will be excavated and removed from the river plain area during the implementation of Alternative A.

Additional evaluation of the potential for erosion following implementation of the RA will be made for the RD, and appropriate erosion protection will be indicated in the RD.

The potential for leachate seeps to the flood plain and through the sidewalls of the landfill will be controlled through surface water management practices and engineering controls to be developed as part of the RD. The RD will address the issue of potential leachate seep development and will consider remedial measures in the flood plain area such as phytoremediation or engineered wetlands to address potential seeps.

3.2.5 Groundwater

According to the Ohio Department of Natural Resources' (ODNR) *Map of Groundwater Resources in Lorain County*, wells located in the shale bedrock in the vicinity of the Site have a low hydraulic conductivity, with developed capacities reportedly ranging from 0 gallons per minute (gpm) to 3 gpm (Hartzell, 1994). The hydraulic conductivity of the shale bedrock underlying the Site, into which MW-3 was installed, was calculated to be 7.08E-06 cm/sec using a specific-capacity test reduction method based on the technique described in Walton, 1962.

Groundwater was encountered within the shallow overburden materials above the bedrock at seven monitoring wells located along the eastern toe of the former landfill. Groundwater present above the bedrock at the Site would tend to flow to the east and discharge to the Black River, which forms the east Site boundary. The hydraulic conductivity of the overburden was calculated for Site wells using a specific-capacity test reduction method based on the technique described in Walton (1962). Specific-capacity test results based on water-level data obtained from overburden wells during the groundwater sampling events range from 1.69E-05 cm/sec (FR-MW-5) to 2.50E-02 cm/sec (FR-MW-10) in the overburden wells, as summarized in Table 3-1. The groundwater flow likely discharges to the Black River at the edge of the Site.

The general groundwater flow direction was determined to be toward the Black River. Groundwater elevations in the overburden along the toe of the landfill fluctuated within a maximum range of 4 feet during the period of observation between October 2003 and November 2003, while the bedrock monitoring well MW-3 showed fluctuations of more than eight feet during the same time period. Overburden monitoring well MW-6, located upgradient of the Site, has also shown substantial variations with time (approximately 16 feet). However, MW-6 was installed in low permeability silty clay overburden and the wide fluctuation in water level at this well may be attributed to seasonal variations in recharge and evapotranspiration.

The hydraulic gradient for the Site was calculated using a ratio of the change in groundwater elevations versus the change in distance. Based on the November 2004 shallow groundwater contour map, the hydraulic gradient near FR-MW-5 was calculated to be 0.167 feet per foot (ft/ft), and 0.125 ft/ft near FR-MW-6.

The potentiometric head elevations at the well couplet location of MW-2/MW-3 (MW-2 overburden well and MW-3 bedrock well) were used to evaluate the vertical head difference between the two water-bearing zones. The vertical gradient between these locations is typically downward. However, the vertical permeability of the shale bedrock is expected to be relatively low and horizontal flow within the overburden is expected to dominate the overall flow. The downward gradient was typically found to be less than 0.2 ft/ft at this well cluster.

The glacial till deposits, composed primarily of silt and clay, form the majority of the native overburden in the Site vicinity and the underlying shale bedrock units were confirmed to have relatively low yields. These observations are also consistent with the characterization of this area as presented in the *Groundwater Resources of Lorain County* (Hartzell, 1994). These relatively low potential yields of the overburden and

shallow bedrock aquifers in the Site vicinity make the potential for future use of these water-bearing zones as a source of potable water impracticable.

In addition, the City of Elyria's Public Utilities and Water Departments reported that current City regulations allow for the use of groundwater as a potable water supply only when a well exists on a property at the time of purchase, and that a property owner may not install a potable water well within the City of Elyria. According to regulations, all new developments located within the City must connect to the City's water supply. This regulation, coupled with the fact that the properties associated with the 10 water wells identified within a one-mile radius of the Site are already connected to the City water supply, make it unlikely that groundwater will ever be used as a potable water source in the Site vicinity.

3.3 Summary of Site Chemical Data

A large body of data was obtained during the RI/FS previous (less comprehensive) Site investigations. Chemical data currently exist for surface water, groundwater, soils, sediment and leachate. A summary of the existing data and a comparison of the data to screening-level risk based concentrations (RBCs) for each media are presented below. Figure 1-2 provides the locations where samples were obtained that are discussed in the summary below.

3.3.1 Chemicals of Concern

This section presents the chemical data obtained for the RI/FS and the results of a screening-level human health evaluation (HHE) and screening level ecological risk assessment (ERA) for the Site. The approach used in the HHE relied on Tier I screening-level evaluations to identify media and exposure pathways that may pose unacceptable risks.

The data evaluation identified health constituents of potential concern (HCOPC) for soil, sediment, surface water, groundwater, and leachate by screening the analytical data using human health-based screening values. Specifically, the HCOPC screening process consisted of comparing maximum chemical concentrations to human health-based screening values. For soils, the HCOPC screening used the results from 40 soil samples that were collected from the Site in 2003 and 2004. As a conservative assumption, both surface and subsurface soil samples were included in the analysis. Sediment data for preliminary HCOPC screening were the 11 samples that were collected from the Black River in 2003, and the results from the single sediment sample collected in 2004. Surface-water, groundwater, and leachate samples collected in 2003 and 2004 for metals analyses included filtered (soluble) and non-filtered (total) samples.

Consistent with the USEPA-approved Focused RI/FS Work Plan (BBL, 2003), a screening-level HHE and a screening-level ERA were conducted as part of the RI/FS. The approach used in the HHE and ERA relied on conservative Tier I screening-level evaluations to identify media and exposure pathways that may pose unacceptable risks to human health and the environment. As part of the HHE and ERA, HCOPC and ecological chemicals of potential concern (ECOPCs) were identified for Site media (i.e., soil, sediment, surface water, groundwater, and leachate). This RD Work Plan focuses on the potential risks to human health and ecological receptors associated with the Site, as identified in the RI/FS Report.

For the HHE, the identified HCOPCs were inorganics (metals), semi-volatile organic compounds (SVOCs), volatile organic compounds (VOCs), and PCBs. Most HCOPC were identified in onsite soil and/or groundwater, with fewer HCOPCs identified for sediment, surface water, and leachate. Potential human exposure pathways associated with the Site include direct contact and incidental ingestion of soil, inhalation of fugitive dust, and dermal contact and incidental ingestion of sediment and surface water in the Black River. Human consumption of contaminated fish from the Black River is also a potentially complete exposure pathway. However, the level of bioaccumulation in fish (and hence the potential for human exposure) is likely to be very low because polycyclic aromatic hydrocarbons (PAHs) and the metals of concern (arsenic,

cadmium, chromium, iron, and thallium) are not considered by the USEPA to be bioaccumulative chemicals (USEPA, 1995). PCBs were also identified as HCOPCs for sediment. The RD will address the soil/groundwater impact at the northeast corner of the landfill where PCBs were identified in the RI.

For the ERA, the ECOPCs identified for the Site included PAHs, PCBs/pesticides, and metals for soil, sediment, surface water, and leachate. The highest potential ecological risks associated with the Site are likely to be in association with elevated metals in the soils around the slope of the landfill. Potential risks associated with leachate, surface water, and sediment are expected to be relatively low, with the exception of sediment in the vicinity of sample FR-SD-111004.

3.3.2 HCOPCs in Soil

Based on the findings of the RI/FS (BBL, 2006), benzo(a)pyrene exceeded the Site-specific soil RBC in seven of the 19 surface soil samples (FR-HB2-S1, FR-HB3-S1, FR-HB5-S1, FR-HB6-S1, FR-HB9-S1, FR-HB12-S1, and FR-SB-34-S1), and dibenzo(a,h)anthracene exceeded the Site-specific soil RBC in two samples (FR-HB2-S1, FR-HB9-S1). For PCBs, only three of the 19 surface soil samples (FR-HB4-S1, FRHB9-S1, and FR-HB10-S1) exceeded the Site-specific soil RBC. Sample FR-HB4-S1 is located along the south slope of the landfill, and samples FR-HB9-S1 and FR-HB10-S1 are located along the north slope of the landfill. Antimony, chromium, and thallium concentrations exceeded the Site-specific RBCs in several of the surface soil samples located along the north and south slopes of the landfill. Cadmium exceeded the RBC in only one sample (FR-HB4-S1). Nickel exceeded the RBC in one sample (FR-HB6-S1) along the south slope of the landfill, and in two samples (FR-HB9-S1 and FR-HB11-S1) along the north slope of the landfill. Lead exceeded the USEPA Region 9 PRG (400 mg/kg) in six of the 19 surface soil samples. Arsenic and iron concentrations in each of the 19 surface soil samples collected along the north and south slopes of the landfill exceeded the Site-specific soil RBC. It should be noted that Site-specific background concentrations of arsenic and iron also exceeded the Site-specific RBC and/or USEPA Region 9 PRGs for residential soil (arsenic exceeded the PRG and Site-specific RBC in all 10 background samples; iron exceeded the PRG in eight of the 10 background samples and exceeded the RBC in all 10 background samples).

3.3.3 Landfill Gas

BFIO conducted monthly methane gas monitoring from February 8, 1989 through January 31, 1994 (BFIO, 1994). This monitoring program involved monitoring for methane gas at 10 locations across the landfill during each monitoring event. The monitoring results showed 0% of the LEL and 0% methane by volume from all locations during each monitoring event. The Park District proposed a landfill gas monitoring system that was formerly approved by OEPA in early 2006. Sampling results to date have shown that no landfill gas migration.

Screening for methane (% of the lower explosive limit—LEL) and organic volatile chemicals with a photo-ionization detector (PID) was performed in soil borings SB-1 through SB-27 during the RI. Methane concentrations (at or above the LEL) were reported in the deepest intervals in borings: SB-5, SB-7, SB-9, SB-10, SB-11, SB-13, SB-15, SB-23B, SB-24B, and SB-25B. Elevated methane below the lower explosive limit was reported at: SB-8 in the 2- to 4-feet soil interval at 86% LEL; SB-14 in the 2- to 4-feet soil interval at 55% LEL; SB-20B in the 0- to 4-feet soil interval at 63.1 % LEL; SB-20C at 9.3%LEL in the 0- to 4-feet soil interval; and, SB-24A in the 0- to 4-feet interval at 53 % LEL. Elevated PID readings were reported at SB-6 in the 6- to 8-feet interval at 60 parts per million (ppm); at SB-19 in the 12- to 14-feet soil interval at 140 ppm; at SB-20B in the 0- to 4-feet soil interval at 6.4 ppm; at SB-23B in the 0- to 4- feet interval at 8.5 ppm; at SB-24A in the 0- to 4- feet interval at 8.6 ppm; and at SB-24B in the 0- to 4-feet interval at 8.3 ppm. None of the 15 perimeter boring s (AM-1 through AM-15) indicated detectable methane concentrations or elevated PID measurements.

3.3.4 Leachate

A Sanitary Landfill Inspection form completed by OEPA on December 21, 1972 (OEPA, 1972) indicated the presence of leachate near the northeast corner of the landfill and noted that insufficient cover material was present for the landfill. A subsequent inspection in June 1976 also indicated the presence of leachate in the northeast corner of the landfill and noted a concern regarding the adequacy of cover material.

A Site Inspection Report from E&E, on behalf of USEPA (E&E, 1980), indicated that leachate was observed at the northeast corner of the Site to be entering the Black River. One leachate sample and one sediment sample were collected from the observed seepage points located between the northeastern toe of the landfill and the Black River. The analytical results from these samples were documented in laboratory data reports from USEPA dated October 20, 1980. These reports show that the leachate sample had detectable concentrations of ammonia, lead, boron, cadmium, zinc, barium, chromium, titanium, tetrahydrofuran, dimethylbenzene, ethylbenzene, 3,3,5-trimethylcyclohexanone, trimethylcyclohexanol, 1,1 oxybisbenzene, methylenebisbenzene, and bis(2-ethylhexyl)phthalate. The reports also show that detectable concentrations of bis(2-ethylhexyl)phthalate, phenol, methylphenol, 1H-Indole, tetradecanediols, and PCBs were present in the collected sediment sample.

PRC observed leachate near the northeast corner of the Site during their 1993 Site inspection (PRC, 1994).

For leachate, the HCOPCs are two VOCs (benzene and chloroform), one SVOC (bis[2-ethylhexyl] phthalate), three pesticides (beta-BHC, dieldrin, and heptachlor), and several metals. The RI reported metals in leachate samples at concentrations above their MCLs include total and/or dissolved cadmium (USACE-B, USACE-C, USACE-D and USACE-F), dissolved nickel (USACE-C and USACE-F), and dissolved thallium (USACE-A). Although these metals were reported at concentrations greater than their MCLs, a number of these metals were also detected above MCLs in background groundwater samples.

Comparison of the leachate data to the OEPA Water Quality Standards for Aquatic Life (Outside Mixing Zone Average [OMZA] and Inside Mixing Zone Maximum [IMZM]) is presented in the RI/FS Report. Several of the leachate samples have ECOPC concentrations (both total and dissolved) greater than the OEPA OMZA standards. However, the majority of these concentrations are less than the IMZM standards (copper was the only constituent to exceed IMZM standards; these exceedances are for total recoverable copper in two leachate samples from location USACE-F), and the relative risks associated with potential leachate exposure are anticipated to be low because: first, exceedances of the OMZA standards are less than one order of magnitude; and. second, the seeps are ephemeral in nature and do not represent suitable habitat for most aquatic receptors.

The RI/FS concluded that that exposure to leachate is not expected to be significant, due to the limited nature of the seeps and the dense vegetation in these areas of the Site (BBL, 2006). Engineering controls will address potential leachate seeps in the flood plain area. The use of trees in the river plain for phytoremediation and/or the use of a constructed wetlands will be considered as alternatives.

3.3.5 Groundwater

The only VOCs with reported concentrations greater than the maximum concentration levels (MCLs) in the groundwater samples collected from the Site are benzene and vinyl chloride, and the only SVOC reported at concentrations above its MCL in the groundwater samples was a common laboratory contaminant, bis(2-ethylhexyl)phthalate, which was also reported as detected above the MCL in the background well. Aroclor 1242 was the only PCB detected at concentrations greater than its MCL in any groundwater sample. Total and/or dissolved metals with reported concentrations greater than their MCLs were: antimony, arsenic, barium, cadmium, lead, nickel, selenium, and thallium. Aluminum, iron and manganese were reported with concentrations greater than their secondary MCLs (SMCLs). The metals which were also

detected above MCLs/SMCLs in background samples were aluminum, antimony, arsenic iron, and manganese.

The RI/FS Report (BBL, 2006) concluded that the results of the supplemental investigation to assess an observation of light non-aqueous phase liquid (LNAPL) in monitoring well FRMW-1 indicate that this is a localized occurrence of PCB-bearing LNAPL was primarily encountered within a discontinuous sand layer at the base of a wedge of fill material encountered immediately downgradient of the toe of the landfill slope near the northeastern edge of the Site. The report also concluded that the inspection of the river bank downgradient of the LNAPL investigation area identified a single location at which evidence of LNAPL discharge to the river was observed. A trace of sheen was identified emanating from a thin sandy layer of soil along a very small section of the river bank downgradient of the LNAPL investigation area. The actual extent of the discharge area along the river bank is not fully defined, and may extend some distance beyond the limited area in which evidence of discharge (*e.g.*; sheen) was observed during the field investigation. The sandy soil layer in which the sheen was observed along the river bank may be directly connected to the sand layer at FR-MW-1 which showed a trace of LNAPL and PCB detections. A supplemental sediment sample (FR-SD-111004) was collected at this location and also showed detections for SVOCs and PCBs.

3.3.6 Surface Water

In their *Expanded Site Inspection Report,* PRC (1994*)* indicated that surface water samples did not identify hazardous substances at levels above background.

The RI/FS Report concluded that none of the reported concentrations of VOCs, pesticides, and PCBs were above their respective ecological screening levels (ESLs). The only SVOC reported at concentrations above its ESL in any of the surface water samples analyzed was bis(2-ethylhexyl)phthalate, which may be attributable to laboratory contamination as this SVOC was also detected in the background surface water sample. In addition, no PCBs were detected in any of the surface water samples analyzed. Metals with reported concentrations greater than their ESLs in surface water samples were: cadmium, copper, lead, nickel, selenium, silver, vanadium, and zinc. However, copper and lead were also detected in the background surface water sample at concentrations exceeding their ESLs.

Comparison of the surface-water data to the OEPA Water Quality Standards for Aquatic Life (OMZA and IMZM) is presented in the RI/FS Report. All of the 2003 surface-water data (both total and dissolved) are below the OEPA standards. For 2004, several samples exceed OMZA water-quality standards for one or more ECOPC. However, the exceedances are less than one order of magnitude, and these concentrations are less than IMZM water quality standards. Given the lack of widespread significant exceedance of surface-water standards, the relative risks associated with potential surface-water exposure were anticipated to be low.

3.3.7 Sediment

Concentrations of benzo(a)pyrene, benzo(b)fluoranthene, dibenz(a,h)anthracene, and PCBs (Aroclor 1254) exceeded the Site-specific sediment RBC in one sediment sample (FR-SD-111004); benzo(a)pyrene also exceeded the Site-specific RBC in sediment sample FR-SD-9. Metal concentrations (i.e., arsenic, cadmium, chromium, iron, and thallium) in sample FR-SD-111004 exceeded their associated Site-specific sediment RBCs. Arsenic concentrations in each of the 11 sediment samples (including the sediment sample collected upstream of the Site) exceeded the Site-specific sediment RBC. The presence of arsenic in the upstream sediment suggests that arsenic is not a Site-related constituent.

PCBs were also identified as HCOPCs for sediment, but only one sample (FR-SD-111004) had PCB concentrations above 1 mg/kg (3.3 mg/kg). A sandy soil layer containing an oily sheen was observed along the river bank at this sampling location. In addition, sample FR-SD-111004 is located downgradient from monitoring well FR-MW-1, which had a measurable thickness of a LNAPL with elevated concentrations of

Aroclors 1242 and 1254. The sheen area does not appear to have led to widespread PCB contamination in the Black River, as indicated by the fact that PCBs were not detected in sediment samples collected downstream at FR-SD-1 and FR-SD-2. The PCB-impacted area will be addressed during the RD.

Comparison of the sediment ECOPC concentrations to ecological risk-based screening values is presented in the RI/FS Report. For organics, two of the sediment samples (FR-SD-8 and FR-SD-9) exhibited concentrations that were between the threshold effect concentration (TEC) and probable effect concentration (PEC) values. For one sample (FR-SD-111004), SVOC concentrations often exceeded both the TEC and the PEC. Metals concentrations for most sediment samples rarely exceeded the PEC values. An exception is sample FR-SD-111004, which exceeded the PEC for several metals. Based on this evaluation, potential ecological risks for sediment are largely associated with sediment in the vicinity of FR-SD-111004.

3.4 Ecological Data

Cover type for the Site and surrounding area was identified by the dominant vegetative species and classification of similar areas into ecological communities. The landfill and immediate surrounding area is a mixture of field, scrub shrub, floodplain forest, and upland forest habitat cover types. Each of these cover types is described as follows:

- Field – Most of the existing landfill cover is classified as field covertype. Field covertype consists of low herbaceous vegetation consisting of forbs and grasses. This covertype is typically inhabited by passerine birds and small mammals (e.g. mice, shrew). Larger mammals (e.g. deer, red fox) and reptiles (e.g. snakes) may also use the area for foraging.
- Scrub-Shrub – Scrub-shrub habitat is located along the slope of the landfill and on the west side of Ford Road. The scrub-shrub plant community includes deciduous shrubs, herbaceous vegetation (e.g., grasses), and saplings. This covertype is typically used for foraging, nesting, and cover by various terrestrial species.
- Upland Forest – Upland forest habitat is located along the northern and southern boundary of the landfill. The upland forest covertype includes mature trees, which are predominantly hardwoods (e.g., black cherry, white ash, white oak, red oak), and understory vegetation such as grasses, shrubs, and other species. The upland forest covertype provides habitat to arboreal mammals (e.g., raccoon, squirrel), and passerine birds may use the forest borders as edge habitat for nesting, breeding, shelter, and feeding. Wildlife may also forage on mast-producing trees (e.g., oaks).
- Floodplain Forest – Floodplain forest is a lowland hardwood forest community found along rivers. The floodplain forest covertype is located east of the landfill between the upland forest and the Black River. Floodplain forests provide suitable habitat for both semi-aquatic and terrestrial fauna due to fluctuating water levels and nutrient-rich soils. Terrestrial species (e.g., raccoon, squirrel) may use this covertype for nesting, breeding, shelter, and feeding. Several types of bird species (e.g. songbirds, waterfowl, and occasional raptors), amphibians (e.g. frogs), reptiles (e.g. turtles), and large mammals (e.g. deer) may also use this covertype.
- Black River – Fish and wildlife resources may also be associated with the Black River east of the Site. The river provides suitable habitat for reptiles/amphibians, benthic invertebrates, and fish. Birds and mammals from surrounding habitat may use the river as a drinking-water source and/or a source of food. Evidence of beaver use was observed near sample locations FR-MW-2 and FR-MW-3.

According to the ODNR Natural Heritage Program (ODNR, 2005), the Site is located within the Black River Reservation. The Black River Reservation is part of the Park District, and follows the Black River as it meanders from Elyria to Lorain. This natural area includes unique habitat types (e.g., shale cliffs, wetlands, a remnant prairie), and a 3.5-mile all-purpose trail located approximately one mile downstream of the Site. The

Cascade-Elywood Park is located along the Black River, approximately two miles upstream of the landfill. Three potentially threatened plant species have been recorded along the Black River downstream of the Site. These species are butternut (*Juglans cinerea),* round-leaved dogwood (*Cornus rugosa),* and Canada buffalo-berry (*Shepherdia canadensis).*

Information from the USFWS (2005) indicates that the Site is within the range of four Federally listed threatened or endangered species, including one mammal (the Indiana bat [*Myotis sodalis]),* two species of birds (bald eagle [*Haliaeetus leucocephalus])* and piping plover (*Charadrius melodus)],* and a snake species (eastern massasauga [*Sistrurus catenatus]).* However, USFWS records indicate that the nearest eagle nest is 2.5 miles northeast of the Site, that no piping plover habitat occurs onsite, and it is unlikely that the massasauga habitat is present (USFWS, 2005). The habitat of the Indiana bat generally consists of caves during the winter months, and man-made structures and possibly hollow trees during the summer months (Burt and Grossenheider, 1980). The Indiana bat may utilize wooded habitats in the vicinity of the Site, but is not expected to utilize Site resources because the landfill has very few mature trees and this species has not been observed at the site.

3.5 Engineering Data

3.5.1 Cover Thickness Evaluation

To evaluate the thickness of the existing landfill cover, 15 soil borings (FR-SB-1 through FR-SB- 15) were advanced at an approximate spacing of one per acre, based on randomly selected locations defined in the field with the concurrence of USEPA. Figure 1-2 illustrates the locations of these borings. The following geotechnical measurements/testing were performed during the landfill cover evaluation:

- Collected thin-walled tube samples (similar to ASTM D1587-00);
- Measured hydraulic conductivity by ASTM D5084-00 from thin-walled tube samples;
- Measured moisture content by ASTM D22 16-98 from thin-walled tube samples;
- Measured unit weight from thin-walled tube samples;
- Measured grain size by sieve and hydrometer methods by ASTM D422-63 (1998) from bulk samples;
- Measured Atterberg Limits by ASTM D43 18-00 from bulk samples;
- Measured infiltration rates at one location per every three acres by ASTM D3385-94 or D5093-90;
- Measured moisture-density relationship from bulk samples; and
- Performed a topographic survey of landfill surface, slopes, and floodplain.

The 18 soil samples (15 Shelby tube samples and three grab samples) were submitted to Summit Testing & Inspection Company of Akron, Ohio for the measurements/tests described above. Results of the geotechnical measurements/testing are summarized in Table 3-2.

An evaluation of the soil borings installed within the footprint of the landfill demonstrated that there is at least two feet of cover soil over the waste over the majority of the landfill. Less than two feet of cover material was observed at two soil borings (FR-SB-23B and FR-SB-24A) located near the western perimeter of the landfill. Some fill materials (e.g.; broken glass, wood, white goods, etc.) were observed mixed in with shallow surface soils encountered at locations FR-HB- 1, FR-HB-2, FR-HB-3, FR-HB- 1 8, FR-HB- 1 9, and FR-HB-20 along the southern slope/toe of the landfill, and were also visually observed on the ground surface along the northern slope/toe of the landfill. These materials are scattered debris with no significant subsurface landfill waste being encountered at these locations. Figure 3-1 illustrates the cover thickness and the approximate limits of waste at the Site. H&A personnel observed scattered waste materials along the northern and southern end slopes of the landfill during the slope stability site inspection.

Based on the results of the soil cover evaluation, H&A modeled the landfill using the computer program Hydraulic Evaluation of Landfill Performance (HELP) model (Version 3.07) to assess the potential infiltration through the existing cover soil at the Site. The HELP model was used to estimate the average percolation of water through the cover soil into the underlying wastes, while accounting for runoff and evapotranspiration. The water that infiltrates through the cover soil is potentially available to generate leachate in the landfill, and is an indicator of the effectiveness of the cover. On the relatively flat top area of the landfill, average annual percolation was estimated to be 8.9 inches, while on the steep side slopes annual percolation was estimated to be 8.4 inches. This amount of total percolation represents approximately 25% of the average precipitation of 36.7 inches per year, as provided in the HELP model.

3.5.2 Slope Stability Evaluation

A detailed slope stability Site inspection was performed by H&A. The inspection was conducted through a series of random traverses on the top and flanks of the landfill and its immediate environs. The findings of the site inspection are summarized below:

- Portions of the landfill side slopes have relatively steep grades (ranging as high as 1.2:1 (horizontal to vertical ratio) and evidence of erosion was observed in these areas;
- Portions of the eastern slope of the landfill display evidence of some post-covering, local slumping, which has since been stabilized by minor earthwork and revegetation;
- The lower flanks of the landfill side-slopes do not display any evidence of erosion or degradation from normal or flood flows of the adjacent Black River;
- What appears to be a shallow road-cut at the base of the slope near the northeastern corner of the landfill has resulted in minor localized slumping of the slope immediately upgrade of the cut and was one of the locations at which a perennial leachate seep was observed;
- Storm water flow in the channel to which the Ford Road drainage culvert discharges is actively degrading the channel bed adjacent to the northern slope of the landfill. However, erosion of the channel bed would not impact the integrity of the landfill cover and was not identified as a significant concern; and
- The natural freeze-thaw processes will continue to promote the down-slope creep of near-surface soils and the tilting of trees on the slopes. However, the presence of healthy vegetation provides significant reinforcement and stabilization of the in-place slope-covering soil.

3.6 Remedial Design Parameters, Restrictions, and Objectives

The parameters that provide the framework for the RD are the descriptions of the remedial actions provided in the RI/FS, the ROD, the CD and the SOW. The RD is also restricted by chemical-specific, action-specific, and location-specific applicable or relevant and appropriate requirements (ARARs) and to be considered criteria (TBCs) that are promulgated by Federal and State agencies. The following subsections describe the remedial actions to be undertaken at the Site and describe the parameters and restrictions of the RD.

3.6.1 Remedial Actions

The two alternatives that were described in the RI/FS and selected in the ROD were Alternative 3 and Alternative A. These alternatives were further clarified in the SOW and are described in the following subsections.

3.6.1.1 Alternative 3 – In-Situ Containment with Cover Enhancement

This alternative will involve implementing the measures outlined under Alternative 2 of the ROD (e.g., monitoring and institutional controls) in conjunction with the focused removal of waste on the side slopes and enhancement of the existing surface cover over the landfill, as appropriate.

The enhancement of the landfill cover will involve Site grading to improve surface water control and the placement of additional low-permeability material over those areas of the landfill that do not currently have a minimum two feet of cover. Cover soil improvements will follow OEPA DSIWM Guidance Document No. 0123: Construction of a 1976 Cap System (1995). The testing specifications for the cover soil enhancements will include: moisture/density relationship; moisture content range; permeability; and grain size analysis. The construction specifications will include: compaction to at least 95% of the maximum Standard Proctor Density (ASTM D-698) or 90% of the maximum Modified Proctor Density (ASTM D-1557); compaction using loose lifts, no greater then eight (8) inches thick prior to compaction; and monitoring of compaction.

Widely scattered cascaded waste was encountered over an approximately 5,000 square foot area on the north slope of the landfill and an approximately 15,000 square foot area on the south slope of the landfill, both outside the limits of waste. Alternative 3 will address this waste by consolidation within the existing or extended limits of the landfill or disposal at a licensed facility, if this material is shown to be a hazardous waste. In the FS, it was assumed that a limited amount of the material may require offsite disposal and most of the material will be consolidated within the limits of the landfill. The method of waste placement and compaction and covering will be determined as part of the RD. Surficial wastes will be removed as necessary to meet regulatory limits. Backfill will be placed in areas, as required, to result in appropriate stable slopes beyond the limits of the landfill.

The possibility of slope modifications will also be addressed under Alternative 3. Currently, most of the landfill side slopes are steeper than 2:1 and are not imminently unstable. Proposed modifications to the slopes will be evaluated during the RD to develop a design for the RA that will provide stable slopes that can be maintained into the future.

Upon completion of the cover enhancements and other components of Alternative 3**,** the presence of a continuous 2-foot cover over the entire landfill surface will serve to significantly reduce potential exposure to impacted media and migration of COPCs by reducing the volume of precipitation that infiltrates through the landfill.

3.6.1.2 Alternative A – Select Soil Removal Action

This alternative will involve the removal of selected soil/sediment observed to contain COPCs that exceed Site-specific RBCs outside of the landfill limits in the northeast comer of the Site. The removal depth is estimated to be a maximum of fifteen feet or until bedrock is encountered. The excavation will remove the impacted sediment at the edge of the river then extend back toward the toe of the landfill slope, removing impacted soil that represents the likely preferential migration pathway along which the LNAPL impacts may have migrated toward the edge of the river.

To the degree practicable, non-impacted surface soil will be removed, stockpiled, characterized, and reused in the landfill RA, if it can be determined that it is not a characteristic hazardous waste based on the constituents contained in the soil and their respective concentrations. Excavated materials that do not contain levels of PCBs or other constituents requiring off-site disposal or management under TSCA, would be used either in construction of landfill cover improvements or placed under the cap within the landfill. Soils and sediment containing constituents with levels exceeding regulatory limits will be sent offsite for disposal. The excavated areas would be backfilled, as required to establish surface contours, with clean, compacted, low permeability soil and re-vegetated.

The RD will address issues such as the stability of the existing landfill slope during this soil removal action. The excavation required to remove impacted soil and sediment will not extend close enough to the landfill slope or contain an excavation slope steep enough to cause potential slope stability issues with the adjacent landfill. This may require limitations in how close the excavation will approach the toe of the landfill. Similarly, the excavation will not extend too close to the river bank such that it destabilizes the bank, resulting in a failure of the excavation in the direction of the river. Issues such as infiltration of water from the river to the excavation through sand seams in the soil, flow of leachate into the excavation, and prevention of leachate flow to the river will also be addressed in the RD for this remedial action. Consideration will be given in the design to limit the potential migration of any remaining LNAPL while allowing hydrostatic release of groundwater from the area of the excavation.

In completing the design for Alternative A, consideration will be given to infiltration from the Black River to the newly emplaced soil and erosion of the soils by the Black River during flood events. The design will address the issue of potential groundwater build-up behind the soils installed to replace the existing soil and the potential for bypass of the soil through native soil to the north and south of the soil remediation area.

3.6.2 ARARs

CERCLA, as amended by the Superfund Amendments and Reauthorization Act of 1986 (SARA), specifies that Superfund remedial actions must comply with the substantive requirements of Federal and State environmental laws. Such requirements may be ARARs. In addition to ARARs, Federal and State advisories and guidance documents exist that, although not binding regulations, contain information "to be considered" (TBC). ARARs and TBCs are important in developing remedial objectives that comply with regulatory requirements or guidance (as appropriate). The identification of site-specific ARARs is based on specific constituents at a site, the various response actions proposed, and the general site characteristics. As such, ARARs are classified into three general categories:

- **Chemical-Specific ARARs** – specific to the type(s) of constituents, pollutants, or hazardous substances at a site; include state and Federal requirements that regulate contaminant levels in various media;
- **Action-Specific ARARs** – specific to the cleanup activities being considered; usually technology- or activity-based; regulatory requirements that define acceptable excavation, treatment, and disposal procedures; and
- **Location-Specific ARARs** – specific to actions at the geographic location; requirements for contaminant concentrations or remedial activities resulting from a site's physical location (e.g., wetlands or floodplains).

Potentially applicable Federal and State ARARs and TBCs are summarized in Tables 3-3, 3-4, and 3-5. These tables were developed for the RI/FS Report based on appropriate guidance documents. In addition, current State and Federal ARARs tables were reviewed. (USEPA, 2009; USEPA, 1988b; USEPA, 1989a; and OEPA, 2009) and professional judgment conditions or other constraints may inhibit the ability to satisfy all ARARs. The ability to satisfy ARARs was evaluated in detail in Section 6.5 of the RI/FS Report. No additional ARARs have been established subsequent to the completion of the RI/FS Report.

3.7 Design and Performance Criteria

3.7.1 Short-Term Monitoring/Testing

During construction activities associated with interim actions and the implementation of the remedial action (RA), the following monitoring/testing will be performed to ensure and document the quality of the construction and potential impacts to the environment from construction activities. All short-term monitoring and testing will be performed in conformance with the quality and data quality objectives

stipulated in the Quality Assurance Project Plan (QAPP). Construction quality testing will be performed in accordance with the Construction Quality Assurance Plan (CQAP), which is discussed in Section 5, and in accordance with the QAPP. Interim action and remedial action plans will include requirements for both short- and long-term monitoring/testing.

Anticipated short-term monitoring and testing activities are described below and include:

- Monitoring of storm water during construction and excavation activities that may impact surface water;
- Air monitoring during construction activities, as necessary;
- Fugitive dust monitoring and control during construction, as necessary;
- Noise control during construction by adhering to performance of work between specified hours of the day and no work on Sundays; and
- Quality Assurance (QA) testing during construction/repair of the existing cap and placement of structural fill material:

These short-term monitoring and testing activities are described in greater detail in the following subsections.

3.7.1.1 Storm Water Monitoring

The remediation planned for the Site will result in greater than one acre of land disturbance which will require obtaining coverage under OEPA General Permit No. OHC 000003: *Authorization for Storm Water Discharges Associated with Construction Activity under the National Pollutant Discharge Elimination System (NPDES).* All information required for A Notice of Intent (NOI) Application including a processing fee will be submitted to the OEPA Northeast District Office (NEDO) to meet the substantive requirements for coverage under OEPA General Permit No. OHC 000003. The NOI Application must be submitted at least 21 days before the commencement of construction (remediation) activity.

A Storm Water Pollution Prevention Plan (SWP3) will be prepared for the Site which will identify the appropriate controls and measures to be implemented for storm water discharge and monitoring. The SWP3 will be prepared as a stand-alone document in accordance with requirements of Part III of the OEPA General Permit No. OHC 000003. The SWP3 will be prepared in accordance with sound engineering and/or conservation practices by a professional experienced in the design and implementation of standard erosion and sediment controls and storm water management practices addressing the phases of construction (remediation). A more detailed description of the required contents of the SWP3 is provided in Section 6.2.

3.7.1.2 Air Monitoring

Air monitoring will be performed in accordance with the requirements of the site-specific Health and Safety Plan prepared in accordance with 29 CFR 1910.120. It is anticipated that Site monitoring for the presence/absence of VOCs, methane and hydrogen sulfide will be required during intrusive activities. It is anticipated that intrusive activities that could result in exposure to chemicals will only occur at the northeast corner of the landfill where soil removal will take place for Alternative A. This location is approximately 1000 feet from the nearest residence. Monitoring during this remedial effort will occur for the purpose of preventing the exposure of workers in this area to airborne contaminants that may result from the remediation. Ensuring that workers who are at the location of the excavation are protected will indirectly protect local residents from exposure, considering the significant distance to the nearest residence. If work at other locations of the site will result in the potential release of contaminants from the subsurface, monitoring at the location of the construction activity will be used to verify that exposure to area residents does not occur. If needed, temporary air sampling locations will be used in appropriate locations and the RD will address this if additional areas of excavation of impacted material are anticipated.

All air monitoring will be performed with equipment calibrated per the manufacturer's instruction to a traceable standard. Records of instrument calibration will be documented and maintained.

3.7.1.3 Fugitive Dust Monitoring and Control

Dust control and suppression methods will be described in the RD. Inspections for the effectiveness of these methods will be based on visual observation and the frequency of required inspections will be addressed in the RD. The purpose of the inspections is to determine the need for implementing the above-mentioned control measures. The inspections will be performed during representative, normal traffic conditions. No inspection will be necessary for a roadway or parking area that is covered with snow and/or ice or if precipitation has occurred that is sufficient for that day to ensure compliance with the above-mentioned applicable requirements. Any required inspection that is not performed due to any of the above-identified events will be performed as soon as such event(s) has (have) ended.

Records of inspections will be maintained and contain the following information:

- The date and reason any required inspection was not performed, including those inspections that were not performed due to snow and/or ice cover or precipitation;
- The date of each inspection where it was determined that it was necessary to implement control measures; and
- The dates that control measures were implemented.

3.7.1.4 Noise Monitoring and Control

Occupational noise will be monitored and controlled in accordance with the site-specific Health and Safety Plan prepared in accordance with 29 CFR 1910.120.

It is anticipated that during the construction of the RA, the hours of heavy equipment use shall be limited to between 7 AM and 7 PM, to limit noise impact on the surrounding public.

3.7.1.5 Quality Assurance (QA) Testing

QA testing will be completed during the RA activities including during the placement of additional soil cover material where less than two feet of cover soil is present and during the placement of structural fill as needed for modifying steeper slopes at the Site.

QA testing that will occur during construction/repair of the existing cap will be detailed in the CQAP and will consist of at least the following items:

- visual observation of soil placement for uniformity and reasonably free of debris, plant materials, and foreign objects;
- visual observation of soil placement in loose lifts $\leq$ 8-inches in thickness;
- compaction $\geq$ 95 percent of Standard Proctor maximum dry density or $\geq$90 percent of Modified Proctor maximum dry density; and
- Compaction tested for in-place density and moisture content according to nuclear densiometer (ASTM D6938).

QA testing during construction of structural fill will be detailed in the CQAP, which is further described in Section 5.16.

3.7.2 Long-Term Monitoring and Operating Requirements

3.7.2.1 Groundwater Monitoring Following Construction of Remedy

The following monitoring activities will be detailed in the Operation and Maintenance Plan (O&M Plan) for the Site to be completed as a part of the RD. Long-term groundwater monitoring will begin after the RA is complete and in accordance with the approved O&M Plan.

Wells FR-MW-3, FR-MW-4, and FR-MW-6 will be sampled annually for five years for metals and VOCs;

- Wells FR-MW-1, FR-MW-7, and FR-MW-8 will be sampled quarterly for 2 years and semiannually for the following 3 years for TCL VOCs, TCL SVOCs, and TAL metals;
- Analytical results of ground water monitoring will be summarized and each COPC identified in the ROD will be compared with Ohio's Water Quality Standards, Lake Erie Basin, in Ohio Administrative Code Chapter 3745-1 Outside Mixing Zone Average for Aquatic Life. This comparison will also be performed for any COPCs identified when sampling the leachate seeps at the Site; and
- Once the initial 5 year period is complete and if all contaminant levels are found to be below risk levels, wells FR-MW-1, 6, 7, and 8 will be sampled annually for an additional 10 years. The list of parameters to be analyzed will be evaluated and updated as needed during each Five Year Review.

3.7.2.2 Long-Term Monitoring and Maintenance of the Final Cover System

Long-term monitoring and maintenance will begin at the completion of the construction activities. A long-term operation and maintenance plan (O&M Plan) will be developed to adhere to the requirements of the CD and SOW to provide details regarding the long-term O&M requirements for the landfill. Monitoring will continue for 15 years after the date on which the new final cap construction activities were completed. Aspects of the plan, to be prepared as a part of the RD, are outlined below.

Following completion of the construction (remediation) activities, routine inspections/ maintenance typically associated with final cover systems will occur and these activities required for these inspections will be detailed in the O&M Plan. Maintenance of the vegetative cover through mowing will be performed. Routine inspections of the landfill will identify issues (e.g. erosion problems, stressed vegetation, presence of brush, shrubs, tree saplings, etc., settlement/subsidence, missing signs, etc) that will be addressed in accordance with procedures described in the O&M Plan.

To ensure the integrity of the construction (remediation) activities and the continued proper functioning of the monitoring and management systems, a site inspection schedule will be set up in the O&M Plan to adhere to the requirements of the CD and SOW. The site inspections will be performed by a qualified inspector assigned to evaluate the performance of the items and systems listed in O&M Plan. Retention and storage requirements of the Inspection Logs will also be included in the O&M Plan. More details regarding the contents of the O&M Plan are provided in Section 6.3.

3.8 Health and Safety Considerations

Health and safety considerations will be acknowledged in the RD. The RD shall be in conformance with OSHA standards and accepted engineering practices. However, the design must still consider site-specific concerns with respect to the health and safety of personnel during both the construction of remedial actions and future operations and maintenance of remedial actions.

A Health and Safety Plan in accordance with 29 CFR 1910.120 shall govern field activity safety. The intent of this section of the RD Work Plan is to identify potential hazards and issues that may affect or limit the RD and not to detail all potential site hazards and their mitigation with respect to field activities.

3.8.1 Training for Site Personnel

All site personnel need to meet the training and medical monitoring requirements of 29 CFR 1910.120. Site personnel shall undergo a site–specific orientation to the site history, site hazards and their mitigation.

Additional health and safety training may be required depending upon tasks assigned to site personnel. Such training needs may include: equipment operator training, competent person (trenching and excavation; scaffolds; etc), confined space entry, air monitoring, etc.

3.8.2 Topography and Vegetation

Site topography and vegetation may limit heavy equipment access and/or limit its operation. The relatively steep slope (approximately 2:1) between the top of the landfill cap and the floodplain of the Black River reflects a change in elevation of approximately 80 feet. Relatively dense vegetation, including mature trees, is found on hill slopes and across the Black River floodplain. Access roads for heavy equipment may need to be constructed to allow access some site areas. Such access roads shall conform with the requirements (including grades) set forth in 29 CFR 1926.602(a)(3).

In addition, the schedule of RA activities presented in the RD shall consider the river stage with respect to seasonal variation and potential for flash flooding. The RD shall consider the potential for ice between and along the banks of the Black River during freeze-thaw cycles. Structures such as fencing, hay bales, silt fencing, soil piles, etc., may be subject to damage or movement if hit by ice blocks during thaw.

3.8.3 Trenching and Excavation

All trenching and excavation activities shall be performed in conformance with OSHA's trenching and excavation standard (29 CFR 1926 Subpart P). Specifically, the RD shall address the requirements for protective systems with respect to the excavations per OSHA's trenching and excavation standard (29 CFR 1926.652). For the excavation to occur for completion of Alternative A, the presence of a relatively high water table in the flood plain may require control of water in conformance with 29CFR 1926.651(h). 29 CFR 1926.561(g)(1)(i) requires air monitoring to be performed prior to entry in any excavation deeper than 4 feet that are within the proximity of landfill areas. The location of soil stockpiles in relation to excavations shall be in conformance with 29 CFR 1926.561(j).

Daily inspections of excavations, the adjacent areas, and protective systems shall be made by a competent person for: evidence of a situation that could result in possible cave-ins, indications of failure of protective systems, hazardous atmospheres, or other hazardous conditions (29 CFR 1926.651(k)). An inspection shall be conducted by the competent person prior to the start of work and as needed throughout the shift. Inspections shall also be made after every rainstorm or other hazard increasing occurrence. These inspections are only required when employee exposure can be reasonably anticipated.

3.8.4 Potential Chemicals of Concern

Landfill gas generated by the anaerobic decomposition of organic wastes within the landfill may contain methane, hydrogen sulfide, and VOCs. Excavations in proximity to the landfill may accumulate such gases and in-turn displace oxygen. Any permanent site structure (e.g., buildings, storage sheds, vaults, manholes, etc) may require monitoring for methane and hydrogen sulfide accumulation. It is important to note that methane and hydrogen sulfide are flammable.

Decontamination of heavy equipment may have to occur close to its use so as to avoid the potential of cross-contamination. In addition, decontamination fluids and wastes shall need to be contained and labeled.

3.8.5 Sanitation

Potable water shall be available at the job site in conformance with 29 CFR 1926.51(a). Containers of non-potable water shall be clearly labeled in conformance with 29 CFR 1926.51(b). Toilet facilities shall be provided in conformance with 29CFR 1926(c). Washing facilities shall be available in conformance with 29 CFR 1926(f). Change areas and storage of street clothes shall be provided if employees are required by a particular standard to wear protective clothing because of the possibility of contamination with toxic materials in accordance with 29 CFR 1926(i).

4. ADDITIONAL TESTING/TREATABILITY TESTING

Based on the objective of the RD and the data and information that were collected during the RI/FS, data gaps have been identified that must be addressed for completion of the RD. The data gaps and the methods that will be used to obtain the needed data are described in this section. Date quality objectives (DQO) needs for each investigation, to eliminate data gaps and ensure that data are of sufficient quality to satisfy planned uses, are also discussed in this section. The Field Sampling Plan (FSP) and Quality Assurance Project Plan (QAPP) associated with the field activities designed to address the data gaps are included in Appendices A and B, respectively. The FSP provides a detailed description of the field procedures associated with the proposed pre-design investigation, while the QAPP provides the procedures for ensuring quality data are obtained consistent with the project objectives.

4.1 Identified Data Gaps

A large body of data exists for the Site based on past studies, including the RI/FS. Based on a review of the available data and consideration of the objective of the RD, the following data gaps have been identified:

1. The soil cover thickness on the upper/flatter portion of the landfill was investigated during the RI. As a result of that investigation, two locations were identified where the cover thickness is less than the required two feet. However, the extent of the area around these identified points that has a cover thickness of less than two feet was not fully evaluated. This is a data gap that will be addressed with additional testing during the pre-design phase of the RD. A description of the methods that will be used for this investigation is provided in Section 4.2.
2. A portion of the side slope of the landfill located near the center of the east side currently at a 2:1 (H:V) slope and is in good condition with only minor signs of surficial soil cover slumping. To date, no investigation has been focused on the thickness of the soil cover in this area, leaving a data gap for the RD. Additional soil borings will be completed in a grid along in this area during the pre-design phase to determine the extent to which the required two feet of cover soil is present. A description of the investigation that will be used to identify cover thickness is provided in Section 4.3. Investigation of slopes that are currently steeper than 2:1 (H:V) will not be completed. It is assumed that modification of these slopes will occur during the RA, and this will necessitate the placement of a suitable cover soil over these areas during the process of modifying the slopes.
3. In order to complete stability analysis for the side slopes on the perimeter of the landfill, additional data are needed. The strength of the native soil at the toe of the landfill is needed in the evaluation, and an estimate of the current leachate level in the landfill is also needed. The methods that will be used to obtain these additional data are described in Sections 4.4 and 4.5.
4. There are no areas of the landfill side slopes where there is currently evidence of slope failure in material other than the surficial soil cover. The base soil beneath the landfill and outside the toe of the landfill shows no sign of failure. The waste material under the surficial soil and on top of the base soil also shows no sign of slope failure. This condition has persisted for more than 35 years for even the steepest portions of the landfill. Therefore, it can be concluded that even the steepest slopes of the landfill are currently stable. However, a slope stability analysis will be completed to establish conservative factors of safety for the existing slopes, and for slopes following modifications that will be defined in the RD. It is not anticipated that any slopes will remain, following modification that will be steeper than 2:1 (H:V). The methods that will be used to complete the slope stability analyses are described in Section 4.6.

4.2 Soil Cover Thickness Evaluation for the Upper Surface

Figure 3-1 provides the locations where cap thickness borings were completed during the RI/FS. Two of the locations on the upper surface of the landfill showed a soil cover thickness of less than the two feet required by the ROD and SOW. These two locations are identified as borings FR-SB-23B and FR-SB-24A and are shown in red on Figure 3-1. The two identified locations with less than two feet of soil cover are within the limits of waste but close to the edge of waste. An investigation is needed to delineate the size and shape of the area surrounding each of the locations where insufficient soil cover has been identified, and to define the limit of waste in this area.

The locations of the soil borings will be chosen in a manner to minimize the total number of soil borings that must be completed, but of sufficient quantity to delineate the boundary of the area(s) where the cap thickness is less than two feet. A grid of soil borings will be used to identify the extent of the area(s) with insufficient soil cover. An initial grid spacing of 50 feet on center will be used to identify the area(s). In locations where the edge of thinner cover is not identified, additional step-out borings will be completed until the edge is identified in all directions. The limit of waste will also be approximately identified to determine how far to extend the cap repairs in that direction. Step-in borings may also be used to more clearly define the limits where additional soil will be needed. Direct-push technology will be used with continuous sampling to identify the interface between the soil cover and the waste material. The boring and sampling procedure are described in more detail in the FSP (Appendix A).

4.3 Soil Cover Thickness on the East Slope

The central portion of the east slope of the landfill contains a section in which the slope is approximately 2:1 (H:V) and where the surface soil appears to be in relatively good condition. No investigation of the soil cover thickness in this portion of the slope has been conducted to date.

The *Standards for the Current Construction of a 1976 Cap System* (OEPA, 1995), indicates the placement of 2-feet of low permeability soil for caps to approximate the standards in effect in 1976. The document describes how to evaluate soils that are proposed for cap repairs and new work, but indicates that there are no permeability testing requirements for existing soil covers that will remain unaltered. Guidance regarding the soil types that would be acceptable for existing soil covers is provided in the document. Geotechnical testing was performed (Atterberg limits, grain size, permeability, etc.) during the RI/FS on 15 soil samples from the soil cover, and results of that testing indicate that the soils used for the cap at the Site meet the required characteristics discussed in the guidance. No further testing of soil properties is needed to verify that the existing cover soil meets this relatively broad standard for acceptance as an existing pre-1976 soil cover. For any area where the cap is determined to be less than two feet thick and/or must be altered for any other reason, the new cap soil will be constructed to meet the soil properties and compaction criteria discussed in the OEPA guidance document (OEPA 1995).

Figure 4-1 shows the proposed layout of a grid of soil borings that will be completed on the central portion of the east side slope to determine the thickness of the soil cover. The borings will be completed by hand with a hammer drill/slide hammer and soil corer and will be advanced normal to the slope to a point at which waste material is encountered. If any of the boring locations indicate a cover thickness of less than two feet, then a step-out boring(s) may be used to delineate the extent of the area with less than two feet of cover.

4.4 Geotechnical Investigation of the Base Soil

In order to complete the needed slope stability analysis of the existing and proposed future side slopes, additional information regarding the base soil beneath the landfill is needed. Soil borings will be advanced at locations along the toe of the landfill in order to evaluate the lithology, and to obtain samples for geotechnical laboratory testing.

Figure 4-2 provides the proposed locations for the geotechnical borings that will be used to obtain information regarding the strength of this soil layer. The locations will provide a good sampling of the soil properties around the toe of the landfill. In all, seven borings are proposed. The FSP (Appendix A) further describes the sampling protocols and targeted sampling intervals.

The borings will be advanced using a hollow-stem auger (HSA) drilling rig. Split-spoon sampling in the field will be performed via the Standard Penetration Test (SPT) per ASTM D1586. The borings will be sampled continuously to the depth at which competent bedrock is encountered. Each boring will be logged by a qualified geologist, recording various soil parameters and recovery volumes. Boring logs and field notes will be included in the RD report.

Based on the lithology and the needs of the geotechnical investigation, an offset boring will be used to advance the augers (without split-spoon sampling) to the desired depth for collection of undisturbed soil samples for geotechnical testing via thin wall samplers (Shelby tubes). In general, one Shelby tube sample will be collected per boring, but, based on variations in lithology, additional tubes will be collected as needed to obtain the desired geotechnical information. Shelby tube sample collection shall be performed in the field per ASTM D1587.

Upon completion of each boring, the borehole will be backfilled with bentonite grout applied through a bottom-discharging tremie pipe.

Geotechnical laboratory testing shall include:

- Moisture content (ASTM D2116);
- Grain size distribution via sieve and hydrometer (ASTM D422);
- Atterberg Limits (ASTM D4318);
- Density (ASTM D2937); and
- Consolidated undrained (CU) triaxial with pore pressure measurements (set of 3) (ASTM D4767).

Approximately 4 moisture content tests will be performed on SPT samples from each boring. Each Shelby tube sample will be tested for the first four parameters listed above. Based on the results of this testing, three Shelby tube samples will be selected for triaxial testing. Additional samples may be selected for triaxial tests based on the observed lithology.

The sampling and testing procedures for this investigation are described in greater detail in the FSP (Appendix A).

4.5 Current Leachate Level in the Landfill

The leachate level in the landfill is used in the analysis of slope stability. The level of leachate within the side slopes of the landfill is most important. Existing information indicates that the leachate level intersects the landfill slope approximately at the toe of the landfill. Leachate outbreaks from the side slope of the landfill will typically occur at (or near) the leachate level within the landfill. It is generally not possible for the cover soil of the landfill to hold back hydrostatic pressure due to the presence of a leachate "water" table within the landfill, so outbreak locations are good indicators of leachate level within the landfill. To date, most locations where leachate seeps have been observed are at the toe of the slope or beyond the toe in the native soil, demonstrating a low level of leachate within the landfill.

A thorough inspection of the landfill slopes will be completed to identify locations where leachate outbreaks may be occurring. A systematic reconnaissance of the side slope surface will be used to cover all areas of the side slopes and identify leachate outbreaks that may have gone undetected to date. To the extent practical, the side slopes will also be observed in winter when a snow cover is present. Leachate outbreaks can

generally be observed by areas of melted snow on the side slope. The location of each leachate seep will be marked with a stake and a figure prepared showing seep locations and elevations. Information from previously identified leachate seeps will also be used in this evaluation.

The potential for leachate to enter the excavation that will be completed in the northeast corner of the landfill (Alternative A) will be addressed in the RD and methods for dealing with leachate that enters the excavation will be presented. The RD will also describe the methods that will be used to minimize the entrance of river water to the excavation and the prevention of leachate from entering the river.

4.6 Slope Stability Evaluation

An evaluation of the stability of the existing slopes and the slopes following proposed alterations will be completed for the RD. Data obtained from the RD Field Investigation will be used to augment existing information to complete the analyses.

The Ford Road Landfill was closed in 1974, and few changes have been made to the landfill grades since that time. Additional soil cover was added to the landfill in 1980 to provide positive drainage from the flatter upper portion of the landfill, and to provide additional cover where needed. Work occurred on the center section of the eastern landfill slope, providing cover soil and leaving the slopes in this area at approximately 2:1 (H:V). Since closure of the landfill, the steep side slopes on the north and south portions of the landfill have remained unaltered for more than 35 years. In some places these slopes are as steep as 1.2:1.

There are three key modes by which slope failure could occur if the slopes are overly steep relative to strength of the underlying soil, the strength of the waste material, or the strength of the cover soil. These methods include:

1. The foundation soil beneath the landfill and beyond of the toe of the landfill could fail, resulting in slope movements toward the river and/or bulging of the soil at the toe of the landfill;
2. The waste material within the landfill could fail, causing a bulge in the side slope or movement of the waste material at the top of the landfill away from the main body of the landfill; and.
3. The surficial soil cover could fail by slumping or creeping down slope.

Each of these modes of failure has characteristic features that can be observed in the field. Site reconnaissance was completed by Haley and Aldrich (H&A) during the RI and has been completed more recently by BC to look for evidence of these types of failure. The only evidence of failure noted relates to the surficial soil (type 3 failure from above), which has slumped in a few locations and shows signs of downhill creep in locations. This third form of slope failure is a concern from the standpoint of long-term maintenance in that the soil cover would need to be repaired following any observed slumping event, but it is not a concern in terms of basal or catastrophic failure of overall slopes at the Site. No evidence has been observed at the Site of basal or waste slope failure (types 1 and 2 from the above list).

Given the long period of time that the slopes have been in their current steep configuration, and the lack of any significant failure of either the soil beneath the landfill or the waste material itself, it can reasonably be concluded that even the steepest slopes of the landfill currently posses a factor of safety that is greater than 1.0. The factor of safety is defined as the ratio of the resisting forces (or moments) to the driving forces (or moments). At a safety factor of 1.0, the driving and resisting forces would theoretically be balanced, but in reality movement would be occurring within the most vulnerable failure surfaces even with a safety factor of 1.0. Based on geotechnical literature sources, slope movements begin to occur when the factor of safety decreases to approximately 1.15, that is, before it reaches 1.0. Given that the steepest slopes at the Ford Road Landfill have remained in place for 35 years without evidence of movement (other than surficial soil slumping or creep), it can be concluded that the slopes currently have a safety factor of at least 1.15.

Although currently stable, most of the slopes at the site are steeper than 2:1 (H:V). In places, waste material is present at the ground surface on the slopes, and this material must be removed and placed within the capped limits of the final landfill. Additionally, portions of the steep side slopes currently have less than two feet of cover soil and the soil cover includes tree roots and other vegetation. In order to remove surficial waste material and ensure the presence of an adequate soil cover on the side slopes, it will be necessary to remove the current vegetation, construct a new soil cover and re-vegetate the slopes. Upon removal of the existing vegetation, it is expected that the cover soils will become less stable with greater potential for erosion and slumping.

Based on the ROD, where cover soil is altered the final cover must be constructed to meet the requirements for a 1976 soil cap (OEPA, 1995). It is not considered practical or cost effective to reconstruct the cap on the side slopes to meet these specifications if the slopes remain steeper than 2:1. Therefore, regardless of the outcome of the quantitative slope stability analysis, the steepest slope that would be considered in the final design would be 2:1 (H:V). If the slope stability analysis determines that the slopes need to be flatter than 2:1 (H:V), to meet appropriate safety factors, then the slopes will be made as flat as required for long-term stability. Maintenance and/or constructability concerns will also be evaluated and may lead to the selection of slopes that are flatter than 2:1 (H:V) even if this is not required for slope stability.

Given that the steeper slopes will be altered to 2:1 (H:V) or flatter, what remains in terms of slope stability analysis is to show that the final slopes around the entire perimeter of the landfill will be stable following the RD/RA. Flattening the landfill slopes will inherently result in stability improvements. The existing steep slopes have remained stable for 35 years and altering these slopes to 2:1 or flatter will intuitively result in improvement to the stability and the safety factor of the slopes. The methods that will be used in the RD to complete the slope stability analysis and calculate a conservative factor of safety are outlined below.

The slope stability analysis will rely on the following data and evidence to conservatively establish the minimum safety factor for the landfill slopes after alterations are completed during the RA: (1) conservative literature values for the strength of the waste material, (2) the understanding that even the steepest slopes at the site have a minimum safety factor of 1.15 (as discussed above), 3) the strength of the soil beneath the landfill and beyond the toe of the slopes determined from the RD Field Investigation and geotechnical analysis, and (4) the level of leachate within the landfill in the zone between the crown and toe of the slope.

The slope stability analysis procedure will begin with an evaluation of the steepest existing slopes at the site. As discussed above, the steep slopes on the north and south portions of the landfill sides possess a safety factor of 1.15 or greater, based on the period of time that they have remained in place without signs of movement (other than that of the surficial soils). The evaluation will be completed using the computer software Slope/W within Geo-Studio 2007 (Geoslope International, 2007). The strength of the soil beneath the landfill and beyond the toe of the landfill will be included in the model based on results obtained from the RD Field Investigation. The strength of the waste material will be derived from conservative literature values. The remaining unknown in the evaluation will be the leachate level within the waste material between the toe and crown of the slope. The leachate level at the toe of the slope can be estimated based on the observed locations where leachate seeps occur at the landfill. Seeps have been observed at the base of the slope or beyond the base within the river plain, but seeps have not been observed on the side slopes of the landfill. If leachate levels were higher near the toe of the slope, leachate outbreaks or seeps would be observed higher on the side slopes. Lack of such higher seeps is good evidence that the leachate levels at the toe of the landfill are at or below the base of the waste material. This leaves only the level of leachate beneath the crown of the landfill as an unknown. This unknown value can be conservatively "backed out" of the evaluation by completing iterations in which a series of potential leachate levels are entered into the model until a safety factor of 1.15 for a current slope is obtained.

With the strength of the existing steep slopes conservatively defined, the safety factor that will result from various methods for buttressing and altering the existing slopes can be quantitatively evaluated. Constructible

methods for altering and supporting the slopes will be evaluated with the goal of achieving a conservatively derived safety factor of at least 1.3 (the minimum factor of safety that ODOT uses for road berms) or greater in the slope stability analysis. As discussed above, final slopes steeper than 2:1 (H:V) will not be considered, but slopes of 2:1 (H:V) and possibly flatter will be evaluated. The slope stability analysis will also include the evaluation of the effects of a 100-year flood on the stability of the slopes as well as seismic loading conditions.

In selecting the preferred approach for the slope configuration, slope safety factor will be only one of several issues considered. Other issues that will be used in the selection process will include: (1) constructability of the alternative, (2) the construction costs, (3) the erosion potential of the slope during and after construction and the methods that will be needed to prevent erosion, (4) the potential need to make future repairs to the surficial soil on the slope if slumping or erosion were to occur in the future, (5) the ability to establish dense vegetation on the slope to prevent future erosion, and (6) the long-term maintenance activities and the safety and cost for mowing the slopes. Consideration will also be given to alternative vegetation covers for the side slopes.

Based on the conservative methods of analysis described above, the Remedial Design will consider options for slope modifications and will propose a preferred approach. The selected slope modification alternative will be based on a slope stability analysis which demonstrates that the proposed changes to the landfill side slopes will result in an acceptable factor of safety and that the changes will result in significant improvements to the stability of the landfill side slopes that are already present in a stable configuration.

4.6.1 OEPA GeoRG Manual Guidance

The stability analyses will be performed and the results reported in general accordance with the GeoRG Manual (OEPA, 2004) where the guidance is applicable to the closure of the Ford Road Landfill. Specifically, this will include:

- A Pre-Design Investigation Report addressing applicable items in the GeoRG Manual;
- Final Stability Report addressing applicable items in the GeoRG Manual; and
- Stability analyses addressing applicable items in the GeoRG Manual, including:
  - Existing and final slopes,
  - Deep failure analyses (potential failure surfaces through the subgrade and waste slopes),
  - Shallow failure surfaces through the soil cover,
  - Drained and undrained conditions (as appropriate),
  - Unsaturated and saturated conditions (as appropriate),
  - Static and seismic loadings, and
  - Factors of safety as discussed above.

The results of these analyses will be provided in the Preliminary RD for review and will be updated and finalized based on comments for the Final RD.

4.7 Field Data Quality Objectives

The type of data to be generated during this investigation will consist of soil samples for lithologic description, geotechnical testing, and stratigraphic analysis. The primary investigative techniques will include 1) soil borings advanced by conventional hollow-stem auger drilling techniques equipped with split-barrel samplers and Shelby tube samplers, 2) hand coring on steep-sloped areas, and 3) conventional direct-push

(Geoprobe®-type) samplers used to identify the thickness of the soil cover in selected locations. The field data objectives for this investigation are described as follows:

- To provide data to define the areas with less than two feet of soil cover;
- To provide geotechnical data sufficient to determine the strength properties of the soil at the toe of the landfill;
- To perform reconnaissance of the landfill slopes over time at frequencies that are sufficient to account for seasonal variations in leachate levels and especially in winter when leachate outbreaks are easier to identify; and,
- To provide sufficient documentation that the methods used during the field investigation are in accordance with the procedures described in the FSP and QAPP.

5. PRELIMINARY DESIGN

The Preliminary RD will be prepared to include the contents specified in the SOW. The Preliminary RD will be submitted when the design effort is approximately 50% complete. The subsections below provide brief descriptions of the contents of each portion of the Preliminary RD.

5.1 Design Criteria

The design criteria discussed in Section 3.7 and 3.8 will be described in the Preliminary RD with any additions to be included based on the nature of the preliminary design and results of the additional field sampling and pre-design work.

5.2 Results of Treatability Studies

Currently, there are no treatability studies planned for the RD. However, if treatability studies are needed, work plans for the studies will be prepared for USEPA review and approval prior to commencing the work. A description of any treatability studies completed and their results will be included with the Preliminary RD.

5.3 Results of Additional Field Sampling and Pre-Design Work

The results of additional field sampling used to gain the information needed to complete the RD will be presented and discussed in the Preliminary RD. It is currently anticipated that these studies will include:

1. A geotechnical investigation of the soils at the toe of the existing landfill slope;
2. An analysis of the stability of the existing landfill slopes;
3. Examining options for slope improvements and analyzing these options for slope stability;
4. The cover thickness evaluations in the upper soil cover area and on the side slope where the existing slope is 2:1 or less steep;
5. Work to estimate the leachate level in the landfill based on the elevation of leachate outbreaks; and
6. Any additional evaluation that may be completed near the northeast corner of the landfill where soil removal is proposed. If any additional studies are completed for the RD, the results of the studies will also be summarized in the Preliminary RD.

5.4 Project Delivery Strategy

The strategy for implementing the RA will be discussed in the Preliminary RD.

5.5 Preliminary Plans, Drawings, and Sketches for the Landfill

Drawings will be prepared to provide a clear indication of the proposed modifications to the landfill that will be provided in greater detail in the Final RD, and to be implemented in the RA. An overview of the construction phasing for the RA will also be provided.

5.6 Preliminary Plans, Drawings, and Sketches for the Soil Removal Area

Drawings relating to the soil removal action near the northeast corner of the landfill will be prepared to provide an indication of the area of the excavation, slopes of the sidewalls for the excavation, and other information needed to convey the nature of the soil removal action. The results of slope stability analyses relating to this excavation and the adjacent steep slopes of the landfill will be presented and discussed. A preliminary evaluation of the sequencing for the activities associated with the soil removal action will be provided. Issues such as infiltration of water from the river and other problematic aspects of this soil removal action will be discussed, along with anticipated solutions. Figure 5-1 shows the general area of the soil removal action.

5.7 Outline of Required Specifications

The specifications that will be provided for the final design will be presented in outline form in the Preliminary RD.

5.8 Preliminary Construction Schedule

A preliminary construction schedule for each aspect of the RA will be provided in the Preliminary RD. The schedule will update the schedule provided in this Work Plan. The construction schedule will include a timeline for completion of the RA Work Plan, and a preliminary schedule for implementation of the construction activities associated with the RA.

5.9 Proposed Cleanup Verification Methods

The methods that will be used to verify that the activities of the RA will result in an achievement of the clean-up goals and Performance Standards as stated in the ROD, SOW and CD will be provided in the Preliminary RD. The Preliminary RD will also provide a discussion regarding verification that ARARs are being met by the RD/RA.

5.10 Proposed Citing/Locations or Processes/Construction Activities

Proposed locations of construction activities and siting of existing as well as planned RA structures shall be identified as part of the Preliminary RD. Such locations shall be identified in sufficient detail so as to delineate the boundaries of work to be performed. In addition, limitations to areas of work shall be described in the Preliminary RD. Such limitations may be related to an identified ARAR, permit condition, best working practice, and/or design criteria. Any existing structures within work areas (e.g., monitoring wells) that are not to be disturbed shall be identified in the Preliminary RD. It is not anticipated that area constraints will be a problem for the RA, and it is noted that land to the north and south of the landfill property is owned by the Lorain County Parks District. However, sequencing of construction activities will be evaluated to limit, as possible, the use of property outside of the defined site boundaries.

5.11 Real Estate, Easement, Restrictive Covenant, and Permit Requirements

An Environmental Covenant between the Park District and U.S. EPA was submitted to U.S. EPA on July 17, 2009, meeting the requirement for real estate easements and restrictive covenants. Any permit requirements associated with the Site arising from the RA shall be identified during the Preliminary RD.

5.12 QAPP Update

Any updates required to the established QAPP will be submitted to USEPA in the Preliminary RD for review prior to implementation.

5.13 HASP Update

Any updates or modifications to the HASP shall be submitted to USEPA in the Preliminary RD.

5.14 FSP Update

Any updates or modifications to the FSP shall be submitted to USEPA in the Preliminary RD.

5.15 Contingency Plan Update

Any updates or modifications to the Contingency Plan shall be submitted to USEPA in the Preliminary RD.

5.16 Construction Quality Assurance Plan

A draft CQAP will be submitted to USEPA in the Preliminary RD. The CQAP describes the site-specific components of the quality assurance program related to the construction of the RA to ensure that the completed project meets or exceeds all design criteria, plans, and specifications. It will contain the following elements:

1. Responsibilities and authorities of all organizations and key personnel involved in the design and construction of the Remedial Action;
2. Qualifications of the Quality Assurance Official to demonstrate he possesses the training and experience necessary to fulfill his identified responsibilities;
3. Protocols for sampling and testing used to monitor construction quality; and
4. Identification of proposed quality assurance sampling activities, including the sample size, locations of sampling/testing, frequency of testing, acceptance and rejection data sheets, problem identification and corrective measures reports, evaluation reports, acceptance reports, and final documentation requirements and protocols.

The draft CQAP will include, at a minimum, the following sections:

- General
- Introduction.
- Definitions and use of terms; related to construction quality assurance and construction quality control.
- Project management; identification of the project team and the qualifications, role, responsibility, and authority of each of the organizations and key personnel involved in the design, construction of the Remedial Action, and performance of CQA activities.
- Scope of the CQAP and discussion of the components of the CQAP
- Project meetings and communication; definition of meetings (pre-construction, progress, problem or work deficiency, and closeout) including personnel to attend, frequency, and discussion topics and the lines of communication.
- Construction Quality Assurance for the Ford Road Landfill
  - Introduction.

- Each component of the Ford Road Landfill construction (remediation) will be addressed for the following CQA activities as the CQA activities apply to each component:
  - Supplier's QC sampling and testing documentation including sample size; locations; test frequency acceptance and rejection documentation; and problem/corrective measures, evaluation, acceptance, and final documentation reports.
  - Delivery, handling, and storage procedures.
  - Installation and repair.
  - Protocols for conformance sampling and testing used to monitor the construction activities including sample size; locations; test frequency acceptance and rejection documentation; and problem/corrective measures, evaluation, acceptance, and final documentation reports.
  - Certification and acceptance
- Monitoring; discussions of the observations and monitoring to be performed by the CQA field inspector including field testing and the conformance testing required by the material suppliers and/or the Contractor.
  - Visual observation of soil placement for uniformity and reasonably free of debris, plant materials, and foreign objects
  - Visual observation of soil placement in loose lifts < 8-inches in thickness
  - Compaction requirements for slope stability; at a minimum, compaction > 95 percent of Standard Proctor maximum dry density or >90 percent of Modified Proctor maximum dry density
  - Compaction tested for in-place density and moisture content according to nuclear densiometer (ASTM D6938)

- Construction Quality Assurance for the Ford Road Landfill
- Documentation
  - Introduction.
  - Daily Record Keeping; memoranda, daily observation and inspection reports, field test data logs, problem management (identification and corrective measures) reports, and design acceptance/certification reports.
  - Photographic Records; logs of the photographs taken to visually document the construction (remediation) activities.
  - Surveying; certification surveying to provide documentation for record drawings and to verify quantities of materials and construction (remediation) activities performed.
  - Alterations; discussions of the revisions/changes/deviations from the design or technical specifications made in the field. If such alterations are made, edits will be placed on the field drawing set (hand edits and notes on design maps) and the field drawing set will be retained for incorporation into the final as-built drawings.
  - Progress Reports; summary reports prepared by the CQA manager pertaining to the status of the construction (remediation) activities.
  - Certification of Completion of Construction Report; written documentation that the work has been performed in compliance with the approved RD Work Plan, the design plans, technical specifications, and physical sampling and testing including the necessary supporting information.
  - Records Storage; discussion of how the information, data, and reports will be maintained and stored.
  - CQA Field Forms; examples of the forms to be use to document observations and field test results.

- At a minimum, all non-identical copies of records and documents will be stored until ten years (see Paragraph 104 of Section XXV [Retention of Records] of the CD) following the USEPA's written notification of Certification of Completion of the Work that the work has been performed in accordance with the CD (see Paragraph 54b of Section XIV [Certification of Completion of the Work]) of the CD).
  - The documentation section of the CQAP will include a discussion of storing records and documents in hard copy and electronic form.

5.17 Responsibilities & Authorities

The responsibilities of organizations and key personnel involved in the design and construction of the RA shall be identified in the Preliminary RD.

5.18 Qualifications of the Quality Assurance Official

The Quality Assurance Official shall be identified and his responsibilities defined as part of the Preliminary RD. The Quality Assurance Official shall be a licensed engineer with sufficient experience on projects with similar scope and issues as to those found at the Site. Specifically, their work experience shall include: landfill design experience, slope stability evaluations and mitigation, and management of construction quality assurance projects at landfills and/or remedial actions.

5.19 Protocols for Sampling and Testing

Protocols used to monitor construction, including but not limited to sampling and testing, shall be identified and described along with associated data quality objectives in the Preliminary RD. It is anticipated that a full description of the construction quality assurance program for construction activities, including protocols and procedures for oversight, record keeping, testing, verification, observation, sampling, and laboratory analysis, shall be described in the CQAP.

5.20 Identification of Proposed Quality Assurance Sampling Activities and Evaluation

Quality assurance sampling activities and protocols related to the RA, including but not limited to sampling and testing, shall be identified and described along with associated data quality objectives in the Preliminary RD. It is anticipated that a full description of the construction quality assurance program for construction activities, including protocols and procedures for oversight, record keeping, testing, verification, observation, sampling, and laboratory analysis, shall be described in the CQAP. This will include determination of sample size, locations and frequency of testing. Required documentation related to the construction quality assurance program shall be identified and at a minimum include: acceptance and rejection data sheets, problem identification and corrective measures data reports, evaluation reports, acceptance reports, and final documentation.

5.21 Description of Final Records Storage

The preliminary design shall include a description of final records storage for both the RD and RA. Pursuant to the CD, each of the settling parties shall preserve and retain all non-identical copies of records and documents (including records or documents in electronic form) now in its possession or control or which come into its possession or control that relate in any manner to its liability under CERCLA with respect to the Site, provided, however, that Settling Parties who are potentially liable as owners or operators of the Site must retain, in addition, all documents and records that relate to the liability of any other person under CERCLA with respect to the Site. Each Settling Party must also retain, and instruct its contractors and

agents to preserve, for the same period of time specified above all non-identical copies of the last draft or final version of any documents or records (including documents or records in electronic form) now in its possession or control or which come into its possession or control that relate in any manner to the performance of the Work, provided, however, that each Settling Party (and its contractors and agents) must retain, in addition, copies of all data generated during the performance of the Work and not contained in the aforementioned documents required to be retained. Each of the above record retention requirements shall apply regardless of any corporate retention policy to the contrary.

Records related to the RD Work Plan will be maintained by Brown and Caldwell in both electronic and hard copy formats. Upon receipt of USEPA approval of the RD Work Plan, Brown and Caldwell shall forward copies of all of the RD Work Plan files to Patrick Steerman of Steerman Environmental Management and Consulting, LLC for archiving.

Records listed above need to be retained for a minimum of 10 years after the Settling Parties receive USEPA's notification pursuant to Paragraph 54.b of Section XIV (Certification of Completion of the Work) as described in the Consent Decree. At the conclusion of this document retention period, the Settling Parties shall notify the United States at least 90 days prior to the destruction of any such records or documents, and, upon request by the United States, Settling Parties shall deliver any such records or documents to USEPA.

Electronically generated CAD and GIS files for final work product, and as-built drawings will be compiled and forwarded to the U.S. EPA for use in potential enterprise GIS efforts. Final geospatial data generated under the SOW will be submitted to the Buffalo District in the following forms (as applicable): Microsoft Access and/or Excel database (project sampling database), ESRI-compatible GIS format (i.e., shapefiles, geodatabases, layer files, etc.), and AutoCAD and MicroStation format for as-built drawings. The drawing files will be generated and checked in AutoCAD for quality control. Electronic files in MicroStation will then be generated using a function present in AutoCAD, but additional quality control checking of the MicroStation files will not be completed following the file conversion, and the final AutoCAD drawing files will be provided in addition to the MicroStation files.

6. PRE-FINAL AND FINAL DESIGN PLANS AND SPECIFICATIONS

The Pre-final RD shall be submitted to USEPA when the design effort is 95% complete, per the CD and SOW. The Pre-final RD shall fully address USEPA comments made to the preceding Preliminary RD submittal. The Pre-final RD shall serve as the Final RD if USEPA has no further comments and issues the Notice To Proceed.

The Final RD shall be submitted when the design effort is 100% complete. The Final RD shall fully address USEPA comments made to the Pre-final RD and shall include reproducible drawings and specifications suitable for bid advertisement.

The Pre-final and Final RD submittals will include those elements listed for the Preliminary RD, as well as the following:

- Final plans and specifications;
- Draft Operation and Maintenance (O&M) Plan;
- Construction Quality Assurance Project Plan (CQAPP).
- Contingency Plan; and
- Performance Standards Verification Plan.

The above listed elements are further discussed below. Section 5 presents the elements to be included in the Preliminary RD submittal.

6.1 Final Plans and Specifications

The Pre-final and Final RD will include reproducible drawings and specifications suitable for bid advertisement.

6.2 Surface Water Management Plan

A Surface Water Management Plan shall be submitted as part of the Pre-final and Final RD submittals. It shall contain the Storm Water Pollution Prevention Plan (SWP3), which will identify the appropriate controls and measures to be implemented for storm water discharge and monitoring. The SWP3 will be prepared as a stand-alone document in accordance with Part III of the OEPA General Permit No. OHC 000003. The SWP3 will be prepared in accordance with sound engineering and/or conservation practices by a professional experienced in the design and implementation of standard erosion and sediment controls and storm water management practices addressing the phases of construction (remediation).

The Surface Water Management Plan shall also set forth the protocols and procedures for evaluating the cap installation with respect to infiltration as required by the SOW. Various models will be used to ensure that the cover soil and surface water drainage systems are functioning or will function with respect to reducing the infiltration of water into/through the landfill. A Site water-balance model, using USEPA's HELP model, or similar software, will be compiled after the remedy is in place to ensure that the cover soil installation was done properly and is functioning as intended.

The Surface Water Management Plan shall also describe the best management practices and controls that shall be monitored and maintained as part of the post closure care. The RA planned for the Site will result in greater than one acre of land disturbance, which will require obtaining coverage under OEPA General Permit No. OHC 000003: *Authorization for Storm Water Discharges Associated with Construction Activity under the National Pollutant Discharge Elimination System (NPDES)*. The substantive requirements of a Notice of Intent (NOI) Application including a processing fee will be submitted to the OEPA Northeast District Office (NEDO) to obtain coverage under OEPA General Permit No. OHC 000003. The NOI Application must be submitted at least 21 days before the commencement of construction (remediation) activity. The Site will be granted general permit coverage to discharge storm water associated with construction (remediation) activity under the terms and conditions of the OEPA General Permit No. OHC 000003.

A Storm Water Pollution Prevention Plan (SWP3) is required for the Site that will identify the appropriate controls and measures to be implemented for storm water discharge and monitoring, General Permit No. OHC 000003. The SWP3 will be prepared in accordance with sound engineering and/or conservation practices by a professional experienced in the design and implementation of standard erosion and sediment controls and storm water management practices addressing the phases of construction (remediation).

At a minimum, procedures in the SWP3 shall provide that all controls on the Site are inspected at least once every seven calendar days and within 24 hours after any storm event greater than one-half inch of rain per 24-hour period. The inspection frequency may be reduced to at least once every month if the entire Site is temporarily stabilized or runoff is unlikely due to weather conditions (e.g., Site is covered with snow, ice, or the ground is frozen). A waiver of inspection requirements is available until one month before thawing conditions are expected to result in a discharge if all of the following conditions are met: The project is located in an area where frozen conditions are anticipated to continue for extended periods of time (i.e., more than one month);

- Land disturbance activities have been suspended; and
- The beginning and ending dates of the waiver period are documented in the SWP3.

Once a definable area has been finally stabilized (e.g. vegetative cover has been established, installation of landscape mulches, rip rap, etc., and temporary erosion and sediment control practices are removed, disposed off the Site, and trapped sediment is permanently stabilized), the area will be designated in the SWP3 and no further inspection requirements will apply to that portion of the Site. Qualified inspection personnel will be assigned to conduct the inspections to ensure that the control practices are functional and to evaluate whether the SWP3 is adequate and properly implemented in accordance with the schedule proposed in Part III.G.1.g of OEPA General Permit No. OHC 000003 or whether additional control measures are required.

A checklist will be developed to be completed and signed by the qualified inspection personnel following each inspection. At a minimum, the checklist (i.e., Inspection Report) will include:

- The inspection date;
- Names, titles, and qualifications of personnel performing the inspection;
- Weather information for the period since the last inspection (or since commencement of construction activity if the first inspection) including a best estimate of the beginning of each storm event, duration of each storm event, approximate amount of rainfall for each storm event (in inches), and whether any discharges occurred;
- Weather information and a description of any discharges occurring at the time of the inspection based on visual observation and/or the use of field instruments or sampling and analysis;
- Location(s) of discharges of sediment or other pollutants from the Site;
- Location(s) of Best Management Practices (BMPs) to be maintained;

- Location(s) of BMPs that failed to operate as designed or proved inadequate for a particular location;
- Location(s) where additional BMPs are needed that did not exist at the time of inspection; and
- Corrective action required, including any changes to the SWP3 necessary and implementation dates.

A Notice of Termination (NOT) Application will be submitted to OEPA NEDO within 45 days of completing the permitted land disturbance activities. Prior to submitting the NOT, final stabilization (e.g. vegetative cover has been established, installation of landscape mulches, rip rap, etc., and temporary erosion and sediment control practices are removed, disposed off the Site, and trapped sediment is permanently stabilized) must be achieved on all portions of the Site, a Site inspection must be performed and documented, and a maintenance agreement must be provided to ensure all post-construction (remediation) BMPs will be maintained in perpetuity.

Substantive requirements for 404/401 permit for disturbance of wetland and surface water areas will be followed. The RD will also incorporate methods for handling storm water that accumulates in excavations.

6.3 Draft O&M Plan

A draft O&M Plan to cover both implementation and long-term maintenance of the RA will be submitted as part of the Final RD. The Final O&M Plan shall be submitted to USEPA in accordance with the construction schedule contained in the approved RA Work Plan.

The O&M Plan shall include the following elements as may be applicable to the Site:

1. Description of normal maintenance:
   a. Description of tasks for operation, including inspections for potential future leachate seeps;
   b. Description of tasks for maintenance, including well inspections in the flood plain area;
   c. Description of prescribed treatment or operation conditions; and
   d. Schedule showing frequency of each O&M task.
2. Description of potential operating problems:
   a. Description and analysis of potential operation problems;
   b. Sources of information regarding problems; and
   c. Common and/or anticipated remedies.
3. Description of routine monitoring and laboratory testing:
   a. Description of monitoring tasks including inspection for leachate seeps at the toe of the landfill;
   b. Description of required data collection, laboratory tests and their interpretation;
   c. Required quality assurance and quality control;
   d. Schedule of monitoring frequency and procedures for a petition to USEPA to reduce the frequency of maintenance or to discontinue it; and
   e. Description of verification sampling procedures if Cleanup or Performance Standards are exceeded in routine monitoring.
4. Description of alternate O&M:
   a. Should a system failure occur, description of alternate procedures to prevent release or threatened releases of hazardous substances, pollutants or contaminants which may endanger public health and the environment or exceed performance standards;
   b. Repair of monitoring wells in the event that damage occurs to the well or protective casing; and
   c. Analysis of vulnerability and additional resource requirement should a failure occur.

5. Corrective Action:
   a. Description of corrective action to be implemented in the event that cleanup or performance standards are exceeded; and
   b. Schedule for implementing these corrective actions.
6. Safety plan:
   a. Description of precautions, necessary equipment, etc., for Site personnel; and
   b. Safety tasks required in event of systems failure.
7. Description of equipment:
   a. Equipment identification;
   b. Installation of monitoring components;
   c. Maintenance of Site equipment; and
   d. Replacement schedule for equipment and installed components.
8. Records and reporting mechanisms required:
   a. Daily operating logs;
   b. Records for operating costs;
   c. Mechanism for reporting emergencies; and
   d. Personnel and maintenance records.

A summary of the observations to be performed during the Site inspection for the cover system will include, but is not limited to, the following:

Surface Water Management System

- Run-off Swales
  - obstructions to flow;
  - erosion;
  - excessive siltation; and,
  - loose or missing rip-rap (if utilized).

Final Cover System

- Erosion
  - final cover surface; and,
  - at the toe of the landfill slopes.
    - Leachate Outbreaks
    - Settlement/subsidence
  - Slope Stability Issues
    - Adequate Vegetation
    - Surface Water Accumulation and
    - The Need for Mowing.

Site Security

- Signs
  - whether or not missing, and,

- quality of lettering (readability).

If issue(s) are identified during the inspections, the issue(s) will be addressed immediately to minimize the potential impact to the integrity of the final cover system. A discussion of the maintenance activities that may be performed will be provided in the O&M Plan and will include the following:

Final Cover System

- Mowing: At a minimum, the vegetation will be mowed each year; where mowing is practical. The final side slopes may be maintained in another manner to be designated in the RD.
- Erosion: The severity of the erosion will be assessed including whether or not the in final cover system has been compromised. Clean common borrow soil material will be placed, compacted, and graded to eliminate any rills, channels, or gullies. The disturbed area will be seeded to establish vegetation. Areas where erosion issues persist may need to have erosion matting and/or riprap installed to aid in the establishment of vegetation and to minimize the continuation of erosion. Erosion issues related to the toe of the landfill slopes, depending on the severity, may need to be evaluated in conjunction with slope stability issues.
- Leachate Outbreaks: Landfill slopes and surrounding areas will be inspected for potential leachate outbreaks. If leachate seeps are observed, they will be noted and evaluated and course of action developed if needed.
- Subsidence: In areas where subsidence/differential settlement has occurred, the severity of the subsidence will be assessed including whether or not the final cover system has been compromised. If the depression does not hold water during rainfall events, then it will be concluded that the cover system has been compromised in this location. If required, clean common borrow soil material will be placed, compacted, and graded to fill the depression back to the level of the adjacent ground surface. Any disturbed area will be seeded to establish vegetation.
- Slope Stability: In areas where slope stability issues are identified, severity of the slope failure will be assessed including whether or not the final cover system has been compromised. Depending on the extent of the slope failure the assessment may include field investigation activities to obtain data and information for use in performing slope stability analysis. Any required remedial activities will be discussed with the USEPA.
- Other vegetation: Vegetation other than grass (e.g. tree saplings, shrubs, bushes, brush, etc.) will be considered during the RD in relation to the type of cover system designed for the site. This type of vegetation will only be included in the design if it can be shown to be compatible with the constructed berm or cover system. Site Security
- Signs: Signs that are loose or that have fallen off of their appropriate locations will be replaced or repositioned. Missing signs and signs where the lettering is determined to not be legible will be replaced.

A record of the maintenance activities performed will be kept in accordance with the procedures outlined in the O&M Plan.

6.4 Construction QA Plan

The final CQAP will be submitted with the Pre-final and Final RD. The components of the CQAP are related to the construction of the RA to ensure that the completed project meets or exceeds all design criteria, plans, and specifications. The CQAP shall contain the elements described in Sections 5.14, and incorporate comments from USEPA's review of the draft CQAP submitted as part of the Preliminary Design.

6.5 Contingency Plan

A draft Contingency Plan shall be developed as part of the Pre-final RD. The Contingency Plan shall be contained in the draft O&M Plan and Performance Standards Verification Plan. Both documents shall include response actions and protocols in the event an inspection, operation and/or maintenance activity or performance standard verification task indicates a deficiency, failure, or an action level has been reached. Both documents shall include protocols and time response requirements for the reporting of emergencies, critical repair issues, non-critical/ routine maintenance activities to USEPA.

6.6 Performance Standards Verification Plan

The Performance Standards Verification Plan (PSVP) shall explain in detail which mechanisms will ensure that the RA achieves the overall Remedial Action Objectives (RAOs) developed and defined in the CD, including those RAOs that are not based upon concentration levels of hazardous substances. The PSVP shall include provisions for confirmation sampling as needed.

Performance monitoring shall be conducted by the Settling Parties for 15 years following the issuance of the Certification of Completion of Work Report, according to the PSVP, to ensure that all Performance Standards are met. The purpose of the PSVP is to provide a mechanism to ensure that both short-term and long-term Performance Standards for the RA are met. The draft PSVP shall be submitted with the Pre-final RD. Once approved, the PSVP shall be implemented on the approved schedule. PSVP will include the following:

1. Quality Assurance Project Plan;
2. Health and Safety Plan;
3. Field Sampling Plan; and
4. Specification of those tasks to be performed by the Settling Parties to demonstrate compliance with the Performance Standards and a schedule for the performance of these tasks.

The PSVP shall explain in detail which mechanisms will ensure that the RA achieves the overall RAOs developed and defined in the ROD, including those RAOs that are not based on concentration levels of hazardous substances. The PSVP shall include provisions for confirmation sampling as needed.

A Site water-balance model, using USEPA's HELP model, or similar software, will be compiled after the remedy is in place to ensure that the cap installation was done properly and is functioning as intended.

7. SUPPORTING SOW TASKS

The SOW identifies additional tasks that support the RD and/or RA. This section discusses these tasks and their implementation.

7.1 Plan to Limit Potential Access/Human Exposure

The CD requires limiting access to certain areas of the Site prior to implementation of the RA. These areas are between the landfill slope and the river where soil impacts were identified within 2-feet of the ground surface. The CD requires that a plan be developed that will limit potential human exposure to contaminants and considers several methods including fencing, signs, and/or physical barriers. The exact method will be specified in the plan based on a field evaluation of conditions. The CD requires submittal of a plan that evaluates such controls and proposes their implementation 120 days from issuance of the Notice to Proceed, which requires this Plan to be submitted by September 19, 2009. Elements to be contained within the Plan are explained below.

Barriers that limit human exposure will be maintained around each area until the remediation is complete within that area. Notification will be made to USEPA prior to the removal of access controls placed in conjunction with this Plan.

- The area that requires exposure control includes the area between the landfill slope and the river in the northeast corner of the Site where organic compounds are present above action levels within two feet of the ground surface

The Plan to control potential human exposure will be submitted separately on or before 120 days from issuance of the Notice to Proceed. The Plan will include a discussion of the types of barrier control that may be used, which will include, but not necessarily be limited to, the following controls:

- Signage;
- Fencing;
- Rip-Rap; and
- Soil cover.

Each control method will be evaluated for use based upon the following criteria:

- Effectiveness of isolation;
- Ease of implementation;
- Compatibility with future remediation;
- Operation and maintenance;
- Ease of removal; and,
- Cost.

Based on conversations with Ohio EPA and USEPA in December 2009, a letter was submitted to USEPA indicating that there would be little or no benefit to the installation of fencing or rip-rap in the area of where the LNAPL is present at or below the water level of the Black River. Water samples taken a few feet from the location of the LNAPL also had no detections of PCBs. Given that access to the area where the LNAPL

has been identified is limited already by the steep river bank and the presence of water above the location for much of the year, the Ohio EPA and USEPA agreed that additional measures to control access to this area would be ineffective and generally not necessary. USEPA agreed in a letter dated January 18, 2010 and provided approval for forgo the rip-rap or fencing. A design for remediation of this area will be prepared as a part of the RD, and the area will be remediated as soon as practical.

7.2 Institutional Controls

The CD requires the implementation of institutional controls related to the Site. The Park District submitted and Environmental Covenant to U.S. EPA on July 17, 2009, which meets the requirements for institutional controls at this Site.

The Settling Parties will grant the access rights and the rights to enforce the land/water use restrictions to: (1) the United States, on behalf of USEPA, and its representatives; (2) the State of Ohio and its representatives; (3) the Settling Defendants and their representatives; and/or (4) other appropriate grantees.

If USEPA and/or Ohio EPA determine that land/water use restrictions in the form of state or local laws, regulations, ordinances or other governmental controls are needed to implement the remedy selected in the ROD, ensure the integrity and protectiveness thereof, or ensure noninterference therewith, the Park District will cooperate with USEPA's and the State's efforts to secure such governmental controls.

The RD and O&M Plan for the RA will stipulate any limitations on land use at the Site during the RA implementation and into the future. It is anticipated that such limitations will include limitations on subsurface excavation in areas of RA structures and limit disturbance to landfill caps and covers, except where required by the O&M Plan.

The O&M Plan will include the type and frequency of reporting requirements, and will designate the responsibility for completing monitoring and inspection activities associated with the RA. Such inspections may include, but not be limited to cover and cap surveys, inspections of the groundwater monitoring network, etc. Identified issues during these inspections will be corrected in compliance with the procedures outlined in the O&M Plan. The O&M Plan will outline the procedures for the documentation and reporting on maintenance and repair activities.

7.3 Long-Term Maintenance and Post-Closure Care

As part of the RD, a detailed plan outlining inspections, monitoring, and operations and maintenance including post-closure care requirements for the RA will be prepared. The O&M Plan is discussed in more detail in Section 6.3, and will be prepared in draft form as a part of the Final RD as discussed in Section 6. This O&M Plan will detail the activities to occur, at what frequency, how these activities are to be conducted, who will conduct each activity, what data are to be collected, and the method and format of reporting to USEPA. The O&M Plan will include a schedule outlining both the performance of tasks as well as reporting deadlines. The O&M Plan will also include procedures for task and plan modification and amendment. Once approved, the O&M Plan will be implemented following the schedule detailed within the Plan.

8. REFERENCES

American Conference of Governmental Industrial Hygienists (ACGIH), 2005. *Threshold Limit Values for Chemical Substances and Physical Agents & Biological Exposure Indices*, ACGIH: Cincinnati, Ohio.

ASTM Standard D2216-05, *Standard Test Methods for Laboratory Determination of Water (Moisture) Content of Soil and Rock by Mass*, ASTM International, West Conshohocken, PA, 2005, DOI: 10.1520/D2216-05, www.astm.org.

ASTM Standard D422-63(2007), *Standard Test Method for Particle-Size Analysis of Soils,* ASTM International, West Conshohocken, PA, 2007, DOI: 10.1520/D0422-63R07, www.astm.org.

ASTM Standard D4318-05, *Standard Test Methods for Liquid Limit, Plastic Limit, and Plasticity Index of Soils*, ASTM International, West Conshohocken, PA, 2005, DOI: 10.1520/D4318-05, www.astm.org.

ASTM Standard D2937-04, *Standard Test Method for Density of Soil in Place by the Drive-Cylinder Method,*, ASTM International, West Conshohocken, PA, 2004, DOI: 10.1520/D2937-04, www.astm.org.

ASTM Standard D4767-04, *Standard Test Method for Consolidated Undrained Triaxial Compression Test for Cohesive Soils*, ASTM International, West Conshohocken, PA, 2004, DOI: 10.1520/D4767- 04, www.astm.org.

ASTM Standard D6938-08a, *Standard Test Method for In-Place Density and Water Content of Soil and Soil-Aggregate by Nuclear Methods (Shallow Depth), Soils*, ASTM International, West Conshohocken, PA, 2007, DOI: 10.1520/D6938-08A, www.astm.org.

Blasland, Bouck & Lee, Inc. (BBL), 2006. *Remedial Investigation/Feasibility Study Work Plan, Ford Road Landfill Site, Elyria, Ohio.*

Brockman, C.S. 1998. *Physiographic Regions of Ohio*. Ohio Division of Geology Survey.

Browning-Ferris Industries of Ohio (BFIO), 1994. *Landfill Gas Monitoring Results, February 8, 1989 through January 31, 1994.*

Consent Decree, United States of America vs. Lorain County Metropolitan Park District, Browning–Ferris Industries of Ohio, Inc., Goodrich Corporation, Ford Motor Company, General Motors Corporation, and Chevron Environmental Management Company, for itself and on behalf of Kenwanee Industries, Inc., District Court Northern District of Ohio Eastern Ohio, U. S. District Court for the Northern District of OH, Eastern Division, signed on February 18, 2009.

Ecology and Environment Inc. (E&E), 1980, *Site Inspection Report – Ford Road Industrial Landfill.* Prepared for the U.S. Environmental Protection Agency (September 30, 1980).

E&E, 1981. *An Evaluation of the Potential for Groundwater Contamination at the Ford Road Site* (October 16, 1981).

E&E, 1983a. *Preliminary Assessment Report.* (January 5, 1983).

E&E, 1983b. *Site Inspection Report – Ford Road Industrial Landfill.* (July 29, 1983).

OEPA, 1972. *Sanitary Landfill Inspection – Ford Road Industrial Landfill.*

OEPA, 1972. *Sanitary Landfill Inspection Form*, December 21, 1972.

OEPA DSIWM, 1995. *Standards for Current Construction of a 1976 Cap System,* March 27, 1995.

OEPA, 2004. *Geotechnical and Stability Analyses for Ohio Waste Containment Facilities*. Geotechnical Resource Group, September 14, 2004.

OEPA DERR, 2009. ARARs Table, RR-034LIST. June 30, 2009. Remedial Response Program website, http://www.epa.state.oh.us/derr/rules/RR-034LIST.pdf

PRC Environmental Management, Inc. (PRC), 1994. *Expanded Site Inspection Report,* (January 10, 1994).

USEPA, Region 5, September 27, 2006. *Record of Decision (ROD) for the Ford Road Industrial Landfill Site.*

USEPA, 1980. *Analytical Data Report EEIB-365,* Ford Road Landfill (October 20, 1980).

USEPA, 1985. *Handbook - Dust Control at Hazardous Waste Sites*, U.S. EPA, EPA/540/2-85/003, November 1985.

USEPA, 1989. *Seminar Publication - Requirements for Hazardous Waste Landfill Design, Construction, and Closure*, U.S. EPA, EPA/625/4-89/022, August 1989.

USEPA, 1988. *CERCLA Compliance with Other Laws Manual - Part I and Part 2*, OSWER Directive 9234.1-01, EPA/540/G-89/006, Interim Final, August 1988.

USEPA, 1989. *Technical Guidance Document: Final Covers on Hazardous Waste Landfills and Surface Impoundments*, U.S. EPA, EPA/530-SW-89-047, July 1989.

USEPA, 1990. Quality Assurance/Quality Control Guidance for Removal Activities: Sampling QA/QC Plan and Data Validation Procedures, Interim Final, U.S. EPA, EPA/540/G-90/004, April 1990.

USEPA, 1991. *Conducting Remedial Investigations/Feasibility Studies for CERCLA Municipal Landfill Sites*, OSWER Directive 9355.3-11, EPA/540/P-91/001, February 1991.

USEPA, 1992. Superfund Accelerated Cleanup Bulletins: Presumptive Remedies for Municipal Landfill Sites, U.S. EPA Publication 9203.1-02I: 1.) April 1992, Vol. 1, No. 1; 2.) February 1993, Vol. 2, No. 1; and, 3.) August 1992, Vol. 1, No. 3

USEPA, 1993a. *Data Quality Objectives Process for Superfund*, Interim Final Guidance, OSWER Directive 9355.9-01, EPA540-R-93-071, September 1993.

USEPA, 1993b. *Technical Guidance Document: Construction Quality Assurance and Quality Control for Waste Containment Facilities*, U.S. EPA, EPA/600/R-93/182, September 1993.

USEPA, 1993c. *Presumptive Remedy for CERCLA Municipal Landfill Sites*, U.S. EPA, EPA 540-F-93-035, September 1993.

USEPA, 1995a. *Remedial Design/Remedial Action Handbook*, OSWER 9355.0-04B, EPA 540/R-95/059, June 1995.

USEPA, 1995b. *Remedial Design/Remedial Action Handbook*, OSWER 9355.0-04B, EPA 540/R-95/059, June 1995.

USEPA, 1995c. *Presumptive Remedies: CERCLA Landfill Caps RI/FS Data Collection Guide*, U.S. EPA, EPA/540/F-95/009, August 1995.

USEPA, 2000. *Data Quality Objectives Process for Hazardous Waste Site Investigations*, U.S. EPA, EPA/600/R-00/007 (EPA QA/G-4HW), January 2000.

USEPA, June 30, 2009. Applicable or Relevant and Appropriate Requirements (ARARS), http: //www.epa.gov/superfund/policy/remedy/sfremedy/arars/overview.htm.

Walton, W.C. 1962. Selected Analytical Methods for Well and Aquifer Evaluation. Illinois State Water Survey, Bulletin 19.

FIGURES

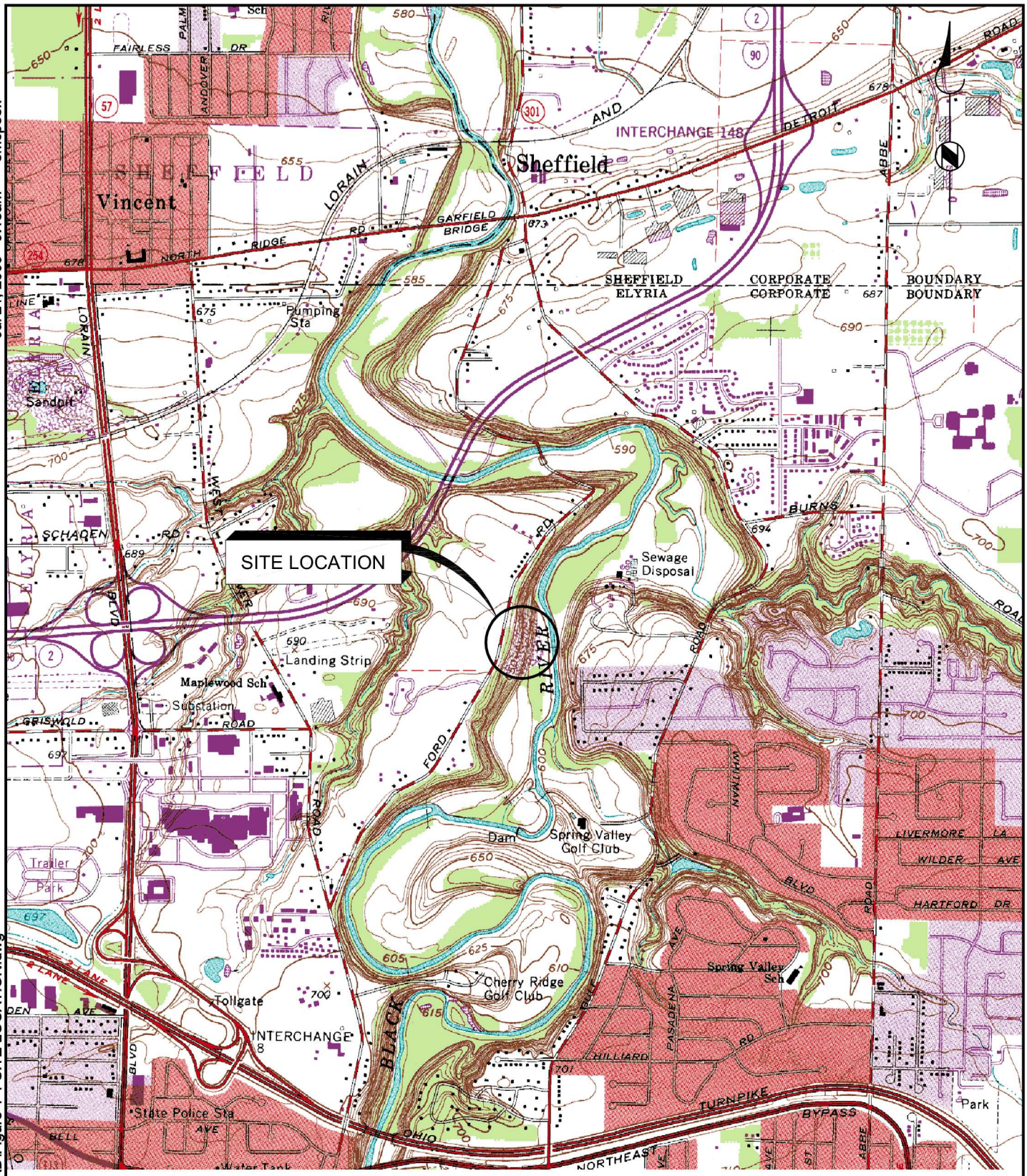

FORD ROAD LANDFILL
ELYRIA OHIO
SOURCE: BASE MAP USGS 7.5 MIN. QUAD., AVON, OH, 1994

0 2000 4000
SCALE IN FEET

Jul 21, 2009 - 9:18am emcpeek

P:\Ford Road\Drawings\CAD\Figure 1-1 SITE LOCATION.dwg

BROWN AND CALDWELL

Figure 1-1
SITE LOCATION

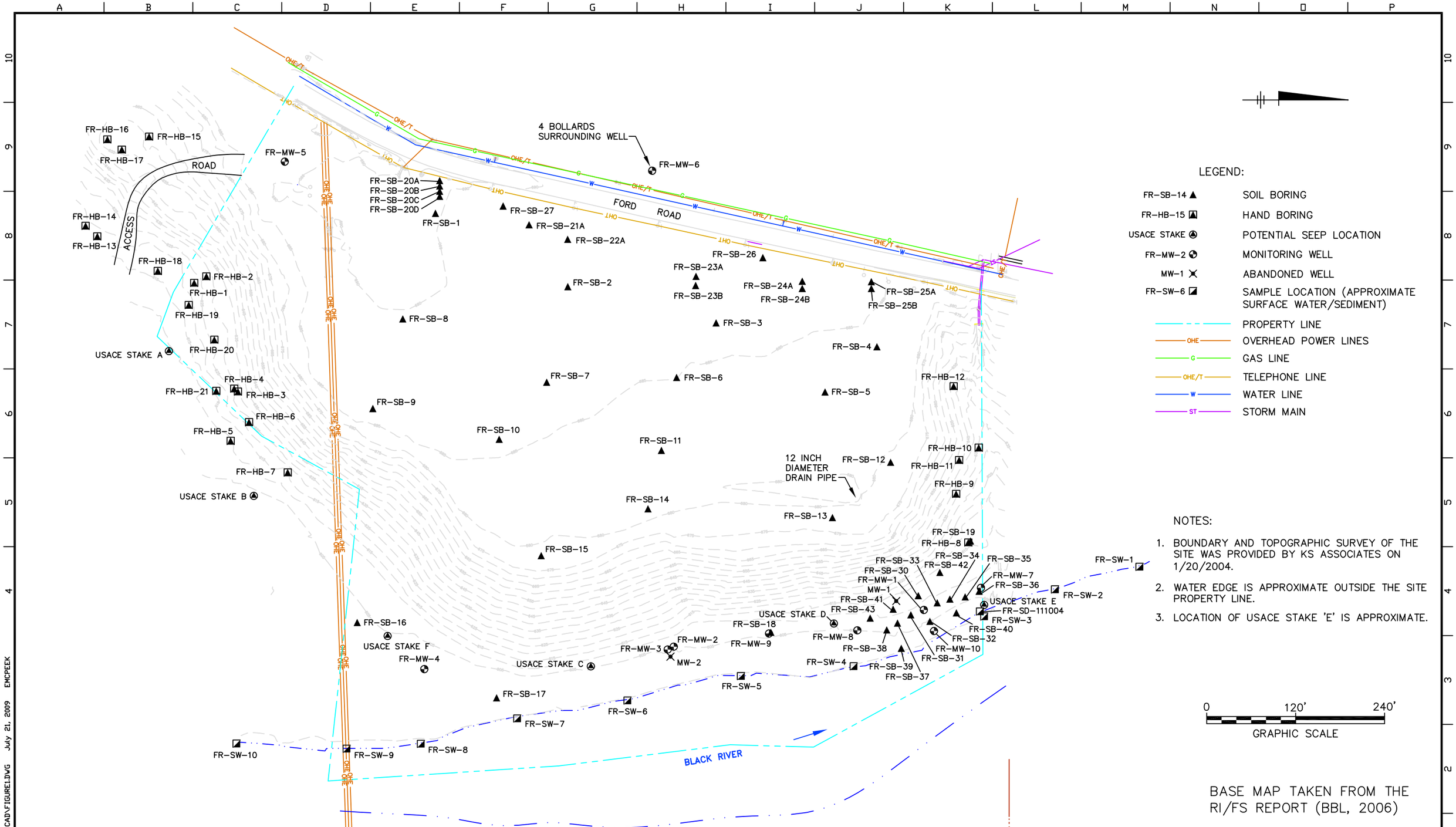

BROWN AND CALDWELL
COLUMBUS, OHIO

SUBMITTED: _____ PROJECT MANAGER DATE: _____
APPROVED: _____ BROWN AND CALDWELL DATE: _____

LINE IS 1 INCH AT FULL SIZE (IF NOT 1" - SCALE ACCORDINGLY)
DESIGNED: JAP
DRAWN: MSK
CHECKED:
CHECKED:
APPROVED:

EXTERNAL REFERENCES

REVISIONS					
ZONE	REV.	DESCRIPTION	BY	DATE	APP.

FORD ROAD LANDFILL, ELYRIA OHIO

SITE PLAN

FILENAME GEO_BOR_LOC.DWG
BC PROJECT NUMBER 137355
CLIENT PROJECT NUMBER
FIGURE NUMBER 1-2

P:\FORD ROAD\DRAWINGS\CAD\FIGURE1.DWG July 21, 2009 EMCPEEK
6/22/09

Project Schedule - Remedial Design
Ford Road CERCLA Landfill, Elyria, Ohio
Figure 2-1

ID	Task Name	% Complete	Start	Finish
1	Consent Decree Entered	100%	Wed 2/18/09	Wed 2/18/09
2	**USEPA Approval of Supervising Consultant/Engineer**	**100%**	**Tue 3/31/09**	**Fri 5/22/09**
3	Selection Notification and QMP Submittal	100%	Tue 3/31/09	Tue 3/31/09
4	USEPA Review and Comments	100%	Tue 3/31/09	Mon 5/4/09
5	BC Revisions and re-submittal	100%	Tue 5/5/09	Fri 5/22/09
6	USEPA Authorization to Proceed (ATP)	100%	Fri 5/22/09	Fri 5/22/09
7	**Monthly Progress Report to EPA**	**42%**	**Wed 6/10/09**	**Tue 5/10/11**
32	**Health & Safety Plan - Field Design Activities**	**100%**	**Mon 6/22/09**	**Tue 10/20/09**
33	Submit Health and Safety Plan	100%	Mon 6/22/09	Mon 6/22/09
34	Health and Safety Plan Approved	100%	Tue 10/20/09	Tue 10/20/09
35	**Remedial Design Work Plan (RDWP)**	**100%**	**Fri 5/22/09**	**Wed 3/10/10**
36	Organization and Qualifications	100%	Fri 5/22/09	Thu 6/18/09
37	**Remedial Design Investigations**	**100%**	**Fri 5/22/09**	**Thu 7/2/09**
38	RD Investigation Plan	100%	Fri 5/22/09	Thu 6/18/09
39	**Slope Stability Analysis**	**100%**	**Fri 5/22/09**	**Thu 7/2/09**
40	Methods and data gaps	100%	Fri 5/22/09	Thu 6/11/09
41	Data Collection Plan	100%	Fri 6/12/09	Thu 7/2/09
42	**Remedial Design Activities**	**100%**	**Tue 5/26/09**	**Fri 7/31/09**
43	Floodplain Evaluation	100%	Tue 5/26/09	Fri 7/31/09
44	Basis for Soil Erosion Plan	100%	Tue 5/26/09	Fri 7/31/09
45	Basis for Surface Water Plan	100%	Tue 5/26/09	Fri 7/31/09
46	Short Term Monitoring Plan	100%	Tue 5/26/09	Fri 7/31/09
47	Institutional Control Requirements	100%	Tue 5/26/09	Fri 7/31/09
48	O&M Plan Requirements	100%	Tue 5/26/09	Fri 7/31/09
49	Quality Assurance Project Plan Requirements	100%	Tue 5/26/09	Fri 7/31/09
50	Field Sampling Plan Requirements	100%	Tue 5/26/09	Fri 7/31/09
51	Health & Safety Plan Requirements	100%	Tue 5/26/09	Fri 7/31/09
52	Remedial Design Schedule	100%	Tue 5/26/09	Fri 7/31/09
53	BC Quality Control	100%	Mon 8/3/09	Wed 8/5/09
54	Draft to Technical Committee	100%	Wed 8/5/09	Wed 8/5/09
55	Technical Committee Review	100%	Thu 8/6/09	Tue 8/18/09
56	Revisions	100%	Wed 8/19/09	Thu 8/27/09
57	Draft RDWP to EPA	100%	Fri 8/28/09	Fri 8/28/09
58	**RDWP Review and Approval**	**100%**	**Fri 8/28/09**	**Wed 3/10/10**
59	EPA Review and Comment	100%	Fri 8/28/09	Thu 10/1/09
60	**RD Field Investigation Approval**	**100%**	**Thu 10/1/09**	**Wed 10/21/09**
61	Responses to EPA Comments	100%	Thu 10/1/09	Fri 10/16/09
62	EPA Review and Approval	100%	Fri 10/16/09	Wed 10/21/09
63	RDWP Revisions	100%	Fri 8/28/09	Mon 1/18/10
64	Revised RDWP Submitted to EPA	100%	Tue 1/19/10	Tue 1/19/10
65	EPA Review and Approval	100%	Mon 2/15/10	Wed 3/10/10
66	RDWP Conditional Approval	100%	Wed 3/10/10	Wed 3/10/10
67	**Fencing and Signage Plan**	**100%**	**Mon 8/3/09**	**Fri 1/8/10**
68	Plan Preparation	100%	Mon 8/3/09	Mon 9/21/09
69	Fencing and Signage Plan to EPA	100%	Mon 9/21/09	Mon 9/21/09
70	USEPA Approval to forgo Riprap	100%	Fri 1/8/10	Fri 1/8/10
71	**USEPA Review/Progress Meetings (Dates TBD)**	**0%**	**Wed 7/7/10**	**Wed 2/2/11**
74	**Remedial Design (RD)**	**24%**	**Thu 10/22/09**	**Tue 4/5/11**
75	**RD Field Investigation**	**100%**	**Thu 10/22/09**	**Mon 2/15/10**

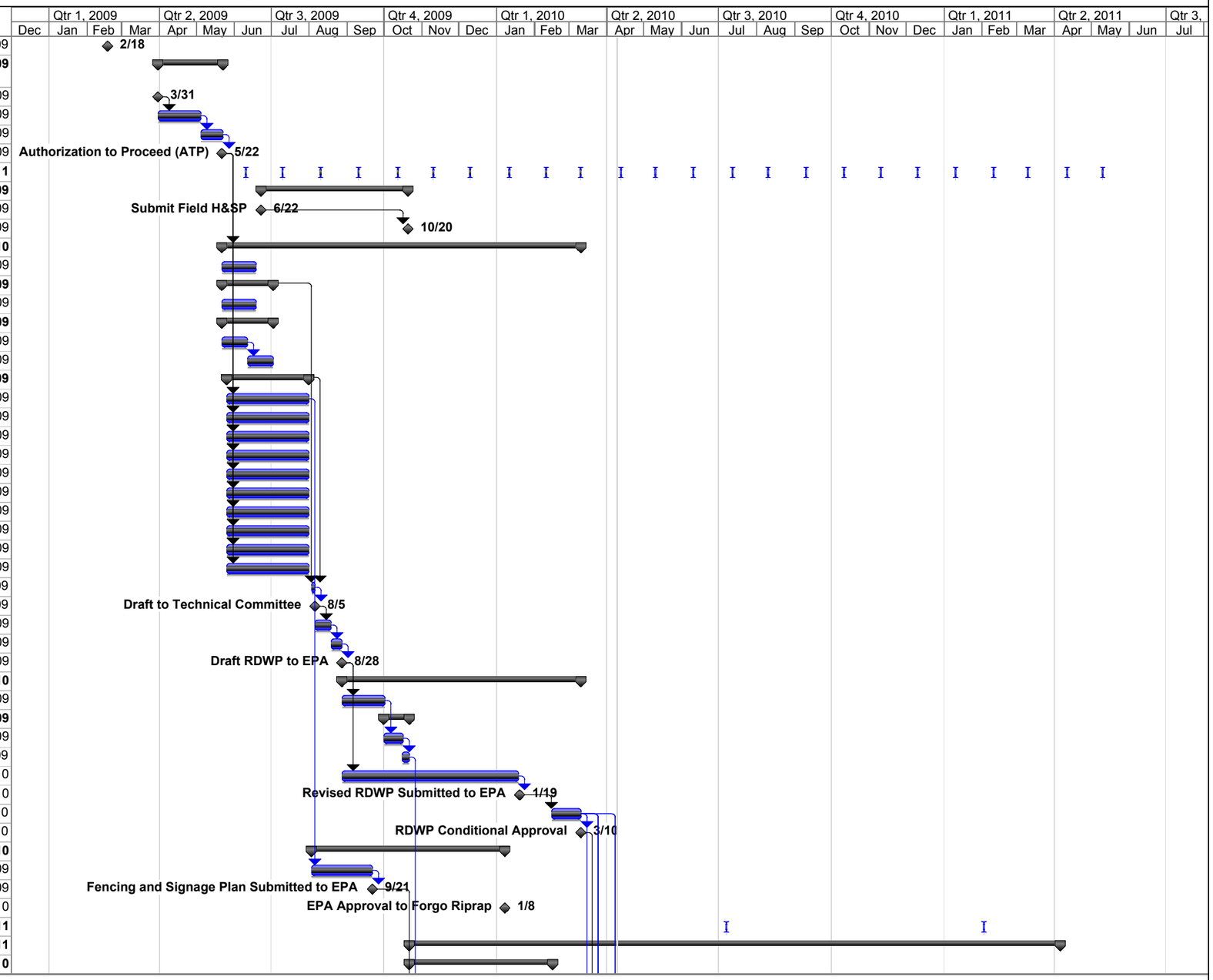

Project: 137335 Ford Road Landfill
Date: Fri 4/9/10

Task | Split | Progress | Milestone | Summary | Project Summary | External Tasks | External Milestone | Deadline

Project Schedule - Remedial Design
Ford Road CERCLA Landfill, Elyria, Ohio
Figure 2-1

ID	Task Name	% Complete	Start	Finish
76	Mobilization	100%	Thu 10/22/09	Mon 10/26/09
77	Geotechnical Investigation	100%	Mon 10/26/09	Fri 11/6/09
78	Sample Analysis and Data Validation	100%	Mon 11/9/09	Mon 2/15/10
79	Validated Pre-design Results Available	100%	Mon 2/15/10	Mon 2/15/10
80	**Preliminary Design**	**22%**	**Thu 3/11/10**	**Tue 6/8/10**
81	Alternatives Evaluation	50%	Thu 3/11/10	Thu 4/15/10
82	Alternative Selection	0%	Fri 4/16/10	Fri 4/30/10
83	Stability Evaluation	35%	Thu 3/25/10	Wed 5/5/10
84	Capping/Grading Plan	35%	Thu 3/25/10	Wed 5/5/10
85	Waste Relocation Plan	25%	Thu 3/25/10	Wed 5/5/10
86	PCB/LNAPL Area Plan	25%	Thu 3/25/10	Wed 5/5/10
87	Plans and Specifications	0%	Thu 4/8/10	Wed 5/12/10
88	Preliminary RD Report	0%	Thu 4/8/10	Wed 5/12/10
89	BC Quality Control	0%	Thu 5/13/10	Mon 5/17/10
90	Draft to Technical Committee	0%	Mon 5/17/10	Mon 5/17/10
91	Technical Committee Review	0%	Tue 5/18/10	Mon 5/31/10
92	Revisions	0%	Tue 6/1/10	Mon 6/7/10
93	Preliminary Design to EPA	0%	Tue 6/8/10	Tue 6/8/10
94	EPA Review and Comment on Preliminary Design	0%	Wed 6/9/10	Tue 7/6/10
95	**Prefinal Design**	**0%**	**Wed 7/7/10**	**Tue 1/4/11**
96	Design and Revisions	0%	Wed 7/7/10	Mon 11/29/10
97	Constructability Review	0%	Wed 8/18/10	Thu 8/19/10
98	CQAPP	0%	Tue 11/9/10	Mon 11/29/10
99	O&M, FSP, and Contingency Plans	0%	Tue 11/9/10	Mon 11/29/10
100	BC Quality Control	0%	Tue 11/30/10	Mon 12/6/10
101	Draft to Technical Committee	0%	Mon 12/6/10	Mon 12/6/10
102	Technical Committee Review	0%	Tue 12/7/10	Mon 12/20/10
103	Revisions	0%	Tue 12/21/10	Mon 1/3/11
104	Prefinal Design to EPA	0%	Tue 1/4/11	Tue 1/4/11
105	EPA Review and Comment on Prefinal Design	0%	Wed 1/5/11	Tue 2/1/11
106	**Final Design**	**0%**	**Wed 2/2/11**	**Tue 4/5/11**
107	Final Revisions	0%	Wed 2/2/11	Fri 2/18/11
108	BC Quality Control	0%	Fri 2/18/11	Mon 2/21/11
109	Draft to Technical Committee	0%	Mon 2/21/11	Mon 2/21/11
110	Technical Committee Review	0%	Tue 2/22/11	Mon 2/28/11
111	Revisions	0%	Tue 3/1/11	Thu 3/3/11
112	Final Design to EPA	0%	Thu 3/3/11	Thu 3/3/11
113	EPA Review and Approval	0%	Fri 3/4/11	Tue 4/5/11
114	Engineer's Cost Estimate	0%	Tue 2/1/11	Thu 3/3/11
115	**Remedial Action (RA) Work Plan**	**0%**	**Wed 4/6/11**	**Thu 6/16/11**
116	Work Plan Preparation	0%	Wed 4/6/11	Tue 5/17/11
117	BC Quality Control	0%	Wed 5/18/11	Tue 5/24/11
118	Draft to Technical Committee	0%	Tue 5/24/11	Tue 5/24/11
119	Technical Committee Review	0%	Wed 5/25/11	Tue 6/7/11
120	Revisions	0%	Wed 6/8/11	Wed 6/15/11
121	Final Draft to EPA	0%	Thu 6/16/11	Thu 6/16/11

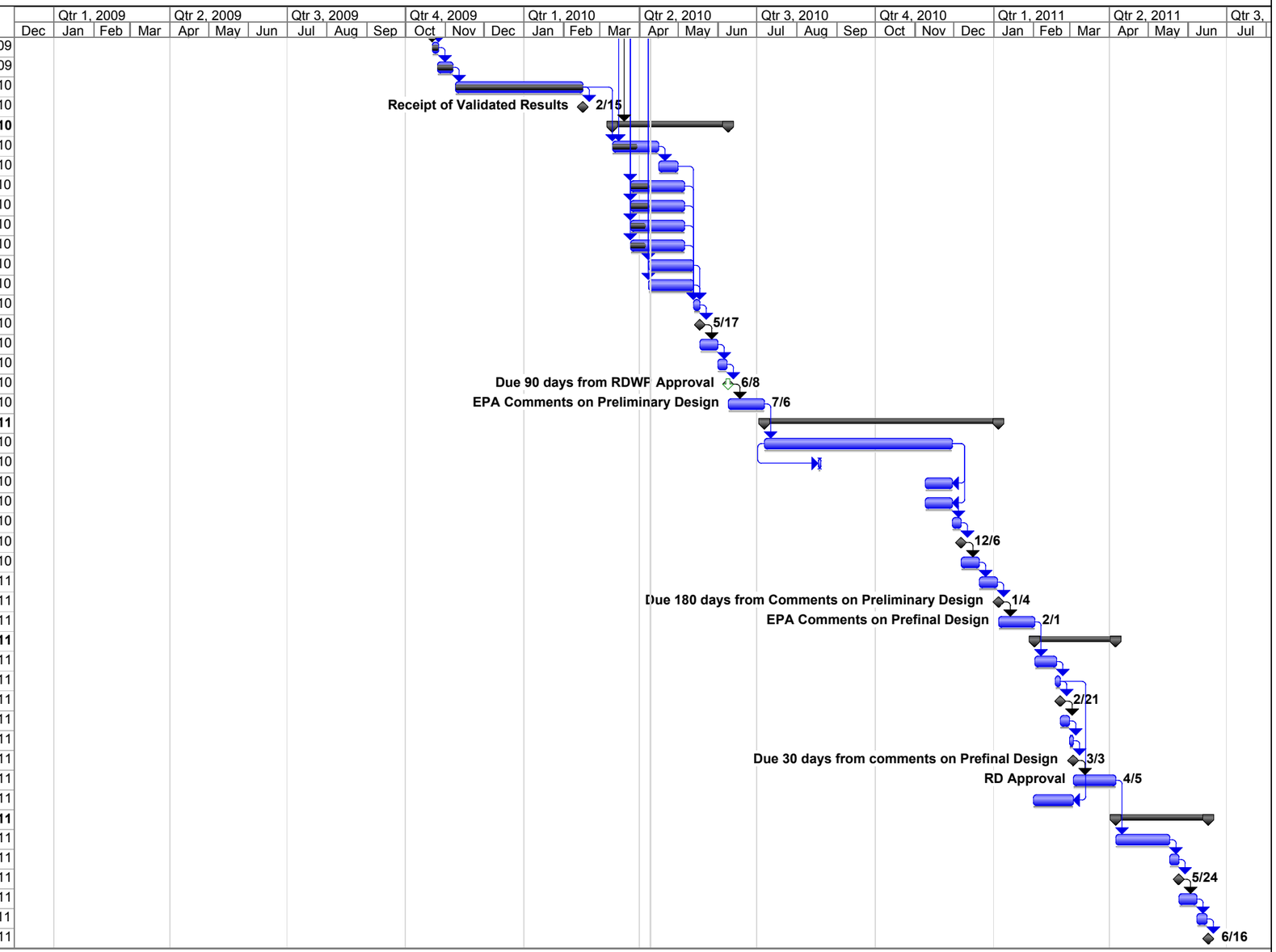

Project: 137335 Ford Road Landfill
Date: Fri 4/9/10

Task | Split | Progress | Milestone | Summary | Project Summary | External Tasks | External Milestone | Deadline

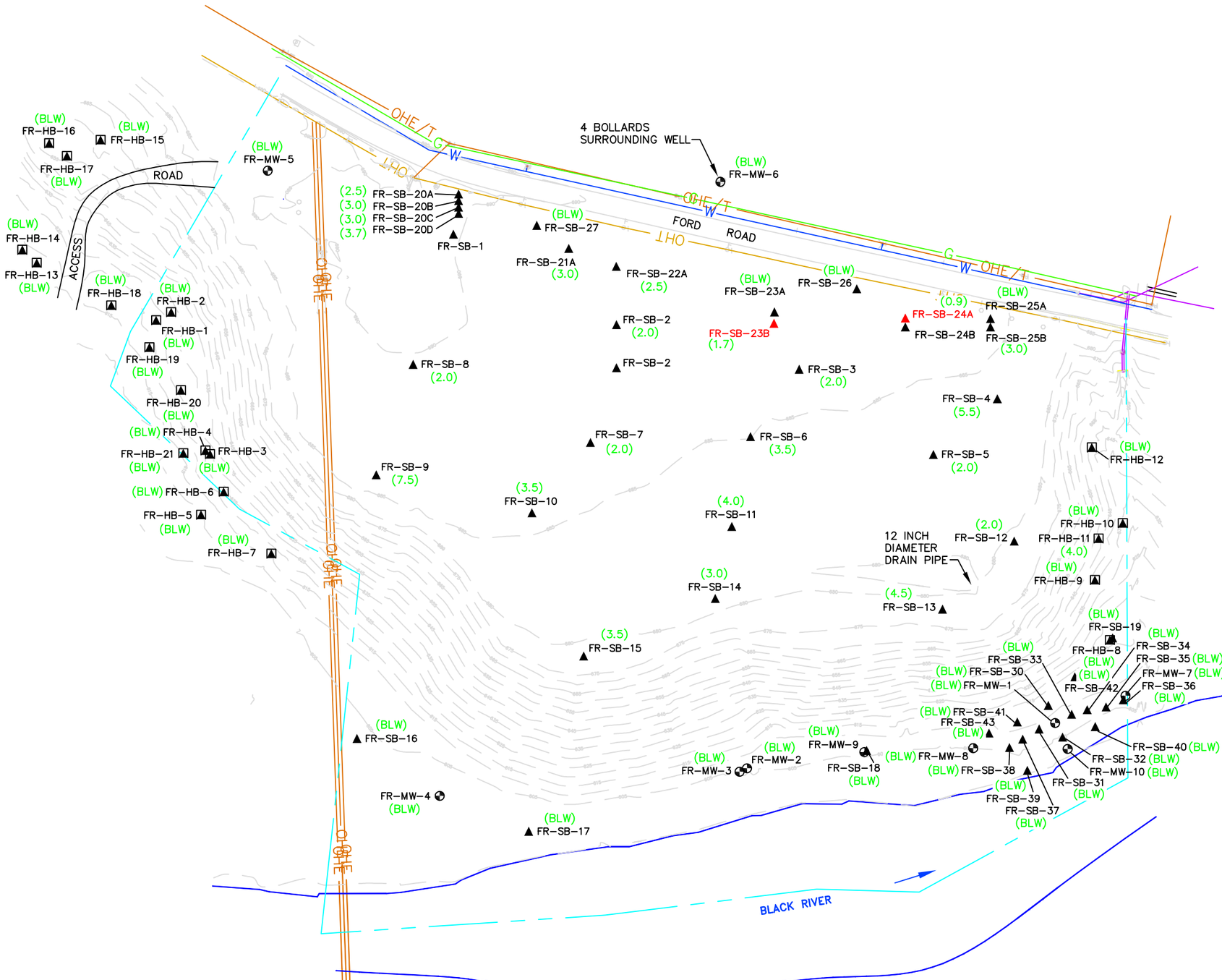

LEGEND:

FR-MW-2	MONITORING WELL
FR-SB-14	SOIL BORING
FR-SB-14	RI/FS SOIL BORINGS INDICATING LESS THAN 2-FT OF COVER
FR-HB-15	HAND BORING
	PROPERTY LINE
OHE	OVERHEAD POWER LINES
G	GAS LINE
OHE/T	TELEPHONE LINE
W	WATER LINE
ST	STORM MAIN
(2.0)	LANDFILL COVER THICKNESS (FEET). BLW = BEYOND LIMITS OF WASTE

NOTES:

1. BOUNDARY AND TOPOGRAPHIC SURVEY OF THE SITE WAS PROVIDED BY KS ASSOCIATES ON 1/20/2004.
2. WATER EDGE IS APPROXIMATE OUTSIDE THE SITE PROPERTY LINE.
3. LOCATION OF USACE STAKE 'E' IS APPROXIMATE.

0 120' 240'

GRAPHIC SCALE

BASE MAP TAKEN FROM THE RI/FS REPORT (BBL, 2006)

BROWN AND CALDWELL

COLUMBUS, OHIO

SUBMITTED: _____ DATE: _____
PROJECT MANAGER

APPROVED: _____ DATE: _____
BROWN AND CALDWELL

LINE IS 1 INCH AT FULL SIZE (IF NOT 1" - SCALE ACCORDINGLY)

DESIGNED: JAP
DRAWN: MSK
CHECKED:
CHECKED:
APPROVED:

EXTERNAL REFERENCES

REVISIONS

ZONE	REV.	DESCRIPTION	BY	DATE	APP.

FORD ROAD LANDFILL, ELYRIA OHIO

PROPOSED GEOPROBE SOIL BORING LOCATIONS

FILENAME GEO_BOR_LOC.DWG

BC PROJECT NUMBER 137355

CLIENT PROJECT NUMBER

FIGURE NUMBER 3-1

P:\FORD ROAD\DRAWINGS\CAD\FIGURE9.DWG January 18, 2010 BKIEDROWSKI

6/22/09

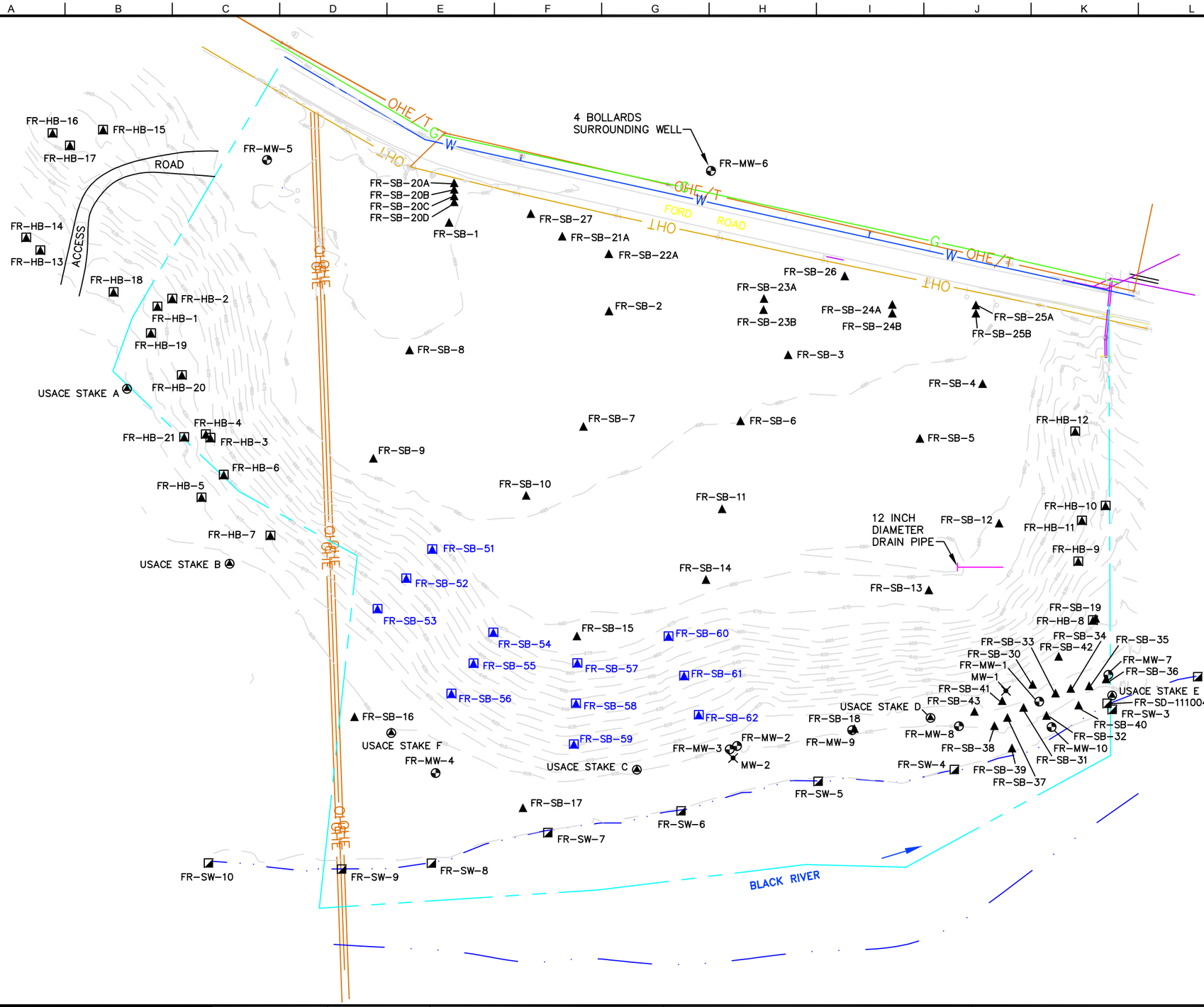

LEGEND:

FR-SB-14 ▲	SOIL BORING
FR-SB-51	PROPOSED HAND AUGERED SOIL BORING
FR-HB-15	HAND BORING
USACE STAKE	POTENTIAL SEEP LOCATION
FR-MW-2	MONITORING WELL
MW-1	ABANDONED WELL
FR-SW-6	SAMPLE LOCATION (APPROXIMATE SURFACE WATER/SEDIMENT)
	PROPERTY LINE
OHE	OVERHEAD POWER LINES
G	GAS LINE
OHE/T	TELEPHONE LINE
W	WATER LINE
ST	STORM MAIN

NOTES:

1. BOUNDARY AND TOPOGRAPHIC SURVEY OF THE SITE WAS PROVIDED BY KS ASSOCIATES ON 1/20/2004.
2. WATER EDGE IS APPROXIMATE OUTSIDE THE SITE PROPERTY LINE.
3. LOCATION OF USACE STAKE 'E' IS APPROXIMATE.

0 120' 240'
GRAPHIC SCALE

BASE MAP TAKEN FROM THE RI/FS REPORT (BBL, 2006)

BROWN AND CALDWELL
COLUMBUS, OHIO

SUBMITTED: _____ DATE: _____
PROJECT MANAGER
APPROVED: _____ DATE: _____
BROWN AND CALDWELL

LINE IS 1 INCH AT FULL SIZE (IF NOT 1" - SCALE ACCORDINGLY)
DESIGNED:
DRAWN:
CHECKED:
CHECKED:
APPROVED:

EXTERNAL REFERENCES

REVISIONS

ZONE	REV.	DESCRIPTION	BY	DATE	APP.

FORD ROAD LANDFILL, ELYRIA OHIO

PROPOSED SIDE SLOPE
SOIL BORING LOCATIONS

FILENAME: SLOPE_SOIL.DWG
BC PROJECT NUMBER: 137355
CLIENT PROJECT NUMBER:
FIGURE NUMBER: 4-1

P:\FORD ROAD\DRAWINGS\CAD\SLOPE_SOIL.DWG July 27, 2009 EMCPEEK
6/22/09

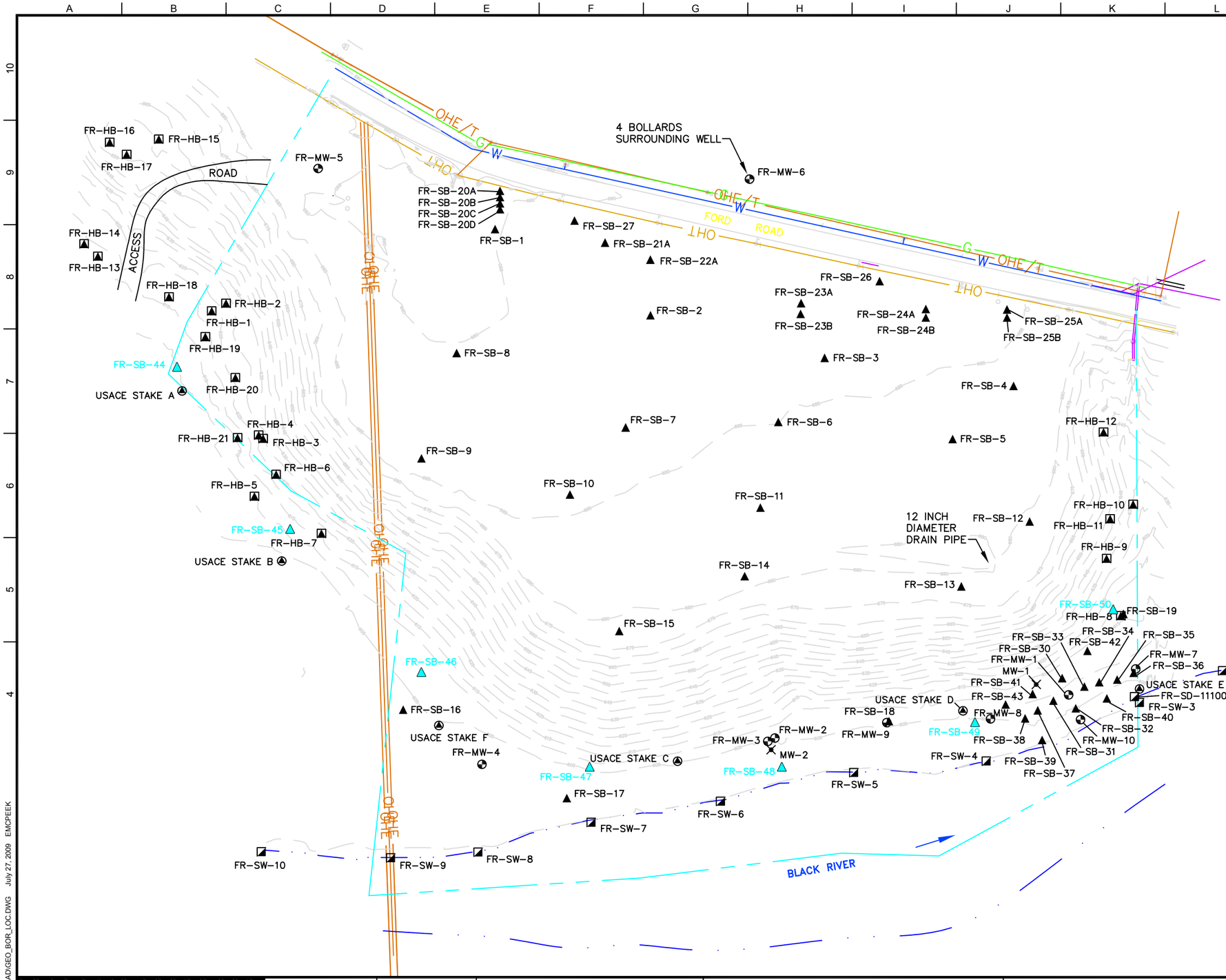

LEGEND:

FR-SB-44	PROPOSED SOIL BORING
FR-SB-14	SOIL BORING
FR-HB-15	HAND BORING
USACE STAKE	POTENTIAL SEEP LOCATION
FR-MW-2	MONITORING WELL
MW-1	ABANDONED WELL
FR-SW-6	SAMPLE LOCATION (APPROXIMATE SURFACE WATER/SEDIMENT)
	PROPERTY LINE
OHE	OVERHEAD POWER LINES
G	GAS LINE
OHE/T	TELEPHONE LINE
W	WATER LINE
ST	STORM MAIN

NOTES:

1. BOUNDARY AND TOPOGRAPHIC SURVEY OF THE SITE WAS PROVIDED BY KS ASSOCIATES ON 1/20/2004.
2. WATER EDGE IS APPROXIMATE OUTSIDE THE SITE PROPERTY LINE.
3. LOCATION OF USACE STAKE 'E' IS APPROXIMATE.

0 120' 240'

GRAPHIC SCALE

BASE MAP TAKEN FROM THE RI/FS REPORT (BBL, 2006)

BROWN AND CALDWELL

COLUMBUS, OHIO

SUBMITTED: _____ DATE: _____
PROJECT MANAGER

APPROVED: _____ DATE: _____
BROWN AND CALDWELL

LINE IS 1 INCH AT FULL SIZE (IF NOT 1" - SCALE ACCORDINGLY)

DESIGNED:
DRAWN:
CHECKED:
CHECKED:
APPROVED:

EXTERNAL REFERENCES

REVISIONS					
ZONE	REV.	DESCRIPTION	BY	DATE	APP.

FORD ROAD LANDFILL, ELYRIA OHIO

PROPOSED PERIMETER SOIL BORING LOCATIONS

FILENAME: GEO_BOR_LOC.DWG

BC PROJECT NUMBER: 137355

CLIENT PROJECT NUMBER:

FIGURE NUMBER: 4-2

P:\FORD ROAD\DRAWINGS\CAD\GEO_BOR_LOC.DWG July 27, 2009 EMCPEEK

6/22/09

TABLES

Table 3-1

Summary of Hydraulic Conductivity
Ford Road Landfill
Elyria, Ohio

Well ID	Hydraulic Conductivity (cm/sec)
FR-MW-1	1 .86E-04
FR-MW-2	2.44E-02
FR-MW-4	1 .67E-02
FR-MW-5	1 .69E-05
FR-MW-6	NA
FR-MW-7	9.98E-04
FR-MW-8	4.48E-03
FR-MW-9	8.49E-03
FR-MW-10	2.50E-02

Hydraulic conductivity values are from the RI/FS Report (BBL, 2006
cm/sec = centimeters per second

Table 3-2

Summary of Geotechnical Results
Ford Road Landfill
Elyria, Ohio

Boring	Sample	Depth (ft)	Liquid/Plastic Limits (%/%)	Plasticity Index (%)	Hydraulic Conductivity (cm/sec)	Max. Dry Density (pcf)	Optimum Moisture (%)
FR-SB-1	STSB-1	1-3	53/26	27	NP	105.1	18.9
FR-SB-2	STSB-2	0-2	41/24	17	2.28E-06	113.3	15.9
FR-SB-3	STSB-3	0-2	37/20	17	4.86E-05	NP	NP
FR-SB-4	STSB-4	0-2	40/22	18	7.25E-06	NP	NP
FR-SB-5	STSB-5	0-2	36/19	17	1.05E-04	NP	NP
FR-SB-6[1]	STSB-6	1.5-3.5	NP	NP	NP	NP	NP
FR-SB-7	STSB-7	0-2	44/23	21	4.92E-04	NP	NP
FR-SB-8	STSB-8	0-2	33/20	13	5.56-05	NP	NP
FR-SB-9	STSB-9	0-2	25/21	14	NP	NP	NP
FR-SB-10	STSB-10	0-2	30/19	11	NP	NP	NP
FR-SB-11	STSB-11	0-2	38/22	16	8.19E-06	NP	NP
FR-SB-12	STSB-12	0-2	41/24	17	4.68E-05	NP	NP
FR-SB-13	STSB-13	0-2	35/21	14	2.43E-05	NP	NP
FR-SB-14	STSB-14	0-2	43/19	24	1.87E-04	NP	NP
FR-SB-15	STSB-15	0-2	34/20	14	3.23E-06	108.8	18

Data are from the RI/FS Report (BBL, 2006)
cm/sec = centimeters per second
ft = feet, NP = Not Performed, pcf = pound-force per cubic foot
[1]Sample FR-SB-6 was not tested due to the presence of landfill waste in the sample.

Table 3-3

Chemical-Specific ARARS and TBCS
Ford Road Landfill
Elyria, Ohio

Regulation	Citation	ARAR or TBC	Description	Rationale
	FEDERAL ARARs AND TBCs			
Toxic Substances Control Act (TSCA)	40 CFR Part 761	ARAR	Provides regulations for storage, handling, and disposal of materials containing PCBs greater than 50 ppm.	Applies to remedies involving excavation.
	STATE ARARs AND TBCs			
Voluntary Action Program (VAP) Generic Numerical Standards	OAC 3745-300-08	TBC	Provides direct contact soil standards for the protection of human health.	May be considered for evaluation of cleanup goals.
VAP Property-Specific Risk Assessment Procedures	OAC 3745-300-09 (F)	TBC	Provides direct contact soil standards for ecological receptors.	May be considered for evaluation of cleanup goals.

Table 3-4

Action-Specific ARARS and TBCS

Ford Road Landfill

Elyria, Ohio

Regulation	Citation	ARAR or TBC	Description	Rationale
FEDERAL ARARs and TBCs				
Standards for Owners and Operators of Hazardous Waste Treatment, Storage, and Disposal Facilities	40 CFR Part 264	ARAR	Requirements for placement of a cap over hazardous waste, run-on/run-off prevention, property use restrictions, and operation and maintenance requirements.	Applies to remedies involving capping.
National Emission Standards for Hazardous Air Pollutants	40 CFR Part 61	ARAR	Requirements for air emissions testing during excavation.	Applies to remedies involving excavation.
Occupational Safety and Health Act (OSHA)	29 CFR Part 1910 29 CFR Part 1926 29 CFR Part 1904	ARAR	Established requirements for worker safety and health.	Would apply for any action taken at the Site.
USDOT Placarding and Handling	49 CFR Part 171	ARAR	Transportation and handling requirements for hazardous materials.	Applies to remedies involving transport of hazardous materials on public roadways.

Table 3-4 (Continued)

Action-Specific ARARS and TBCS

Ford Road Landfill
Elyria, Ohio

Regulation	Citation	ARAR or TBC	Description	Rationale
Resource Conservation and Recovery Act (RCRA)	40 CFR Part 257	ARAR	Establishes regulations regarding criteria for classification of solid waste disposal facilities and practices.	Applies to residuals removed from the Site.
Resource Conservation and Recovery Act (RCRA)	40 CFR Parts 257 and 258 42 U.S.C. 7401 et seq.	TBC	Establishes standards for the management and disposal of solid waste.	May be considered as guidance on the management of waste.
Clean Air Act (CAA)	40 CFR Part 52 42 U.S.C. 7401 et seq.	TBC	Establishes requirements for emission rates in accordance with National Ambient Air Quality Standards (NAAQS); provides guidelines for minimizing effects of fugitive dust/airborne COCs resulting from excavation; establishes primary and secondary ambient air quality standards for emissions.	May be considered for remedial alternatives that include removal and/or relocation of soils.

Table 3-4 (Continued)

Action Specific ARARS and TBCS

Ford Road Landfill
Elyria, Ohio

Regulation	Citation	ARAR or TBC	Description	Rationale
EPA 540/G-90/007	OSWER Directive 9355.4-01	TBC	Guidance on remedial actions for Superfund landfill sites. Advocates appropriate engineering and institutional controls for material that is managed in place.	May be considered as general guidance for activities at the Site.
EPA 540/G-90/007	OSWER Directive 9355.4-01	TBC	Guidance on remedial actions for Superfund landfill sites. Advocates appropriate engineering and institutional controls for material that is managed in place.	May be considered as general guidance for activities at the Site.

Table 3-4 (Continued)

Action Specific ARARS and TBCS

Ford Road Landfill
Elyria, Ohio

STATE ARARs AND TBCs

Regulation	Citation	ARAR or TBC	Description	Rationale
Standards for Current Construction of a 1976 Cap System	Ohio EPA – DSIWM Guidance #0111 OAC 3745-27-09(F)	ARAR	Establishes criteria for materials, construc-tion, and testing specifications for a cap at a pre-1990 landfill.	Applies to remedies involving surface cover enhancement.
Identification and Listing of Hazardous Waste	Ohio EPA Rule 3745-51	ARAR	Establishes procedures for identifying solid wastes which are subject to regulation as hazardous wastes.	Applies to remedies involving excavation.
Acceptance and Handling of Hazardous Waste and the Manifest System	Ohio EPA Rule 3745-53- 20	ARAR	Provides standards relating to the use of the manifest system and its record keeping requirements.	Applies to the transportation of removed materials.
Acceptance and Handling of Hazardous Waste and the Manifest System	Ohio EPA Rule 3745-53- 20	ARAR	Provides standards relating to the use of the manifest system and its record keeping requirements.	Applies to the transportation of removed materials.
Ohio EPA Guidance	GeoRG Manual	TBC	Guidance on landfill geotechnical evaluations and slope stability analysis.	Guidance applies primarily to new landfills, but some aspects are relevant to work at Ford Road Landfill.

Table 3-5

Location-Specific ARARs and TBCs
Ford Road Landfill
Elyria, Ohio

Regulation	Citation	ARAR or TBC	Description	Rationale
			FEDERAL ARARs and TBCs	
Clean Water Act	40 CFR Part 131	ARAR	Specifies water quality criteria for all surface waters	Applies to all sites where surface water is present.
Endangered Species Act	16 USC 1531 et seq. 50 CFR Part 200 50 CFR Part 402	ARAR	Requires federal agencies to ensure that the continued existence of any endangered or threatened species and their habitats will not be jeopardized by a site action.	Applies to any action taken at the site. Site-specific information requests regarding the possible occurrence of threatened/endangered species and critical habitat were submitted to both the U.S. Fish & Wildlife Service (USFWS) and the ODNR Natural Heritage Program. Responses from the agencies are included as Appendix P.
Standards for Owners and Operators of Hazardous Waste Treatment, Storage, and Disposal Facilities	40 CFR Part 264.18(b)	ARAR	Landfill facilities within a 100-year floodplain must be designed, constructed, operated, and maintained to avoid washout.	Applies to capping and post-excavation restoration activities.
Executive Order 11988, Protection of Floodplains	40 CFR Part 6 App. A	ARAR	Actions taken within a floodplain must avoid adverse effects, minimize potential harm, restore, and preserve natural and beneficial values of the floodplain.	Applies to capping and post-excavation restoration activities.

Table 3-5 (Continued)

Location-Specific ARARs and TBCs
Ford Road Landfill
Elyria, Ohio

Description	Citation	ARAR or TBC	Description	Rationale
National Historic and Historical Preservation Acts	36 CFR Part 65 36 CFR Part 800 16 USC 470	ARAR	Requires actions to protect and preserve artifacts and historic and cultural properties.	Applies to any action taken at the site. A full historic investigation will be completed before any alternative is implemented.
			STATE ARARs and TBCs	
Water Quality Standards – All Waters	OAC 3745-1 -04	ARAR	Specifies water quality criteria that all surface waters of the state must meet.	Applies to all sites where surface water is present.
Water Quality Standards – Black River Drainage Basin	OAC 3745-1 -27	ARAR	Specifies water quality criteria that all surface waters within the Black River drainage basin must meet.	Applies to all sites within the Black River drainage basin where surface water is present.
Water Quality Standards – Lake Erie Drainage Basin	OAC 3745-1 -33	ARAR	Specifies water quality criteria that all surface waters within the Lake Erie drainage basin must meet.	Applies to all sites within the Lake Erie drainage basin where surface water is present.

Table 3-5 (Continued)

Location-Specific ARARs and TBCs
Ford Road Landfill
Elyria, Ohio

Description	Citation	ARAR or TBC	Description	Rationale
Standards for Current Constructio n of a 1976 Cap System	Ohio EPA – DSIWM Guidance #0111 OAC 3745-27-09(F)	ARAR	Establishes criteria for materials, construction, and testing specifications for a cap at a pre-1990 landfill.	Applies to remedies involving surface cover enhancement.
Identification and Listing of Hazardous Waste	Ohio EPA Rule 3745-51	ARAR	Establishes procedures for identifying solid wastes which are subject to regulation as hazardous wastes.	Applies to remedies involving excavation.
Acceptance and Handling of Hazardous Waste and the Manifest System	Ohio EPA Rule 3745-53-20	ARAR	Provides standards relating to the use of the manifest system and its record keeping requirements	Applies to the transportation of removed materials.

APPENDIX A. FIELD SAMPLING PLAN

FIELD SAMPLING PLAN
FOR THE
REMEDIAL DESIGN/REMEDIAL ACTION
FORD ROAD LANDFILL

Prepared for
The Ford Road Landfill Settling Parties
August 2009

Prepared by:

Brown and Caldwell
4700 Lakehurst Court, Suite 100
Dublin, Ohio 43016

137335.300.050

TABLE OF CONTENTS

1. INTRODUCTION....1
1.1 Background and History....1
2. SAMPLING AND TESTING OBJECTIVES....3
3. SAMPLING LOCATION AND FREQUENCY....4
3.1 Geotechnical Investigation....4
3.1.1 Previous Investigations....4
3.1.2 Proposed Geotechnical Investigation....5
3.2 Contingency Investigations....6
3.2.1 Monitoring Well Installation....6
3.2.2 Groundwater Sampling....7
3.2.3 Monitoring Well Abandonment....7
3.2.4 Soil Sampling....7
4. SAMPLE DESIGNATION AND DOCUMENTATION....9
4.1 Field Sample Designation....9
4.2 Laboratory Sample Identification Number....10
4.3 Field Sampling Documentation....10
4.3.1 Sample Labels....10
4.3.2 Field Logbook....10
4.3.3 Field Forms....11
5. SAMPLING EQUIPMENT AND PROCEDURES....12
5.1 Sample Collection Equipment....12
5.1.1 Equipment for Sampling Soils....12
5.1.2 Equipment for Sampling Groundwater....13
5.2 Field Instrumentation....13
5.2.1 Interface Probe....14
5.2.2 Groundwater Multi-Parameter Meter....14
5.2.3 Photoionization Detector....14
5.2.4 Multi-Gas Detector....14
5.3 Sample Collection Procedures....14
5.3.1 Soil Sampling....14
5.3.2 Groundwater Sampling....16
5.4 Field Quality Control Samples....17
5.4.1 Trip Blank....17
5.4.2 Equipment Blank....17
5.4.3 Field Duplicates....17
5.4.4 Matrix Spike/Matrix Spike Duplicates....17
5.5 Environmental Conditions....17
5.6 Decontamination Procedures....18

5.7 Investigation Derived Waste 18
6. SAMPLE HANDLING AND CUSTODY 19
6.1 General Sampling Protocols 19
6.1.1 Sample Containers 19
6.2 Chain-of-Custody 19
6.2.1 Sample Labels 19
6.2.2 Chain-of-Custody Record 19
6.2.3 Transfer of Custody 20
6.3 Sample Packaging and Shipment 20
7. REFERENCES 21
ATTACHMENT A SOPS AND ASTM STANDARDS ..... A
ATTACHMENT B ODNR WELL ABANDONMENT GUIDANCE ..... B

1. INTRODUCTION

This document presents the Field Sampling Plan (FSP) for field activities associated with Remedial Design (RD), and Remedial Action (RA) at the Ford Road Landfill (the Site). Updates to this FSP may be made periodically if field activities are required that are not currently anticipated. These activities will be undertaken on behalf of the Ford Road Landfill Settling Parties (Settling Parties). This work is being performed in accordance with the Consent Decree (CD), Statement of Work (SOW) entered by the Court on February 18, 2009, and associated Record of Decision (ROD) for the Site, dated September 27, 2006.

This FSP has been prepared in general conformance to relevant U.S. Environmental Protection Agency (USEPA) and the Ohio EPA (OEPA) guidance, including "Guidance for Conducting Remedial Investigations and Feasibility Studies under CERCLA" (USEPA, 1988).

The overall approach and objectives of the remedial design activities are discussed in the RD Work Plan (RDWP) (Brown and Caldwell, 2009). The Data Quality Objectives (DQOs) and overall project Quality Assurance (QA) objectives and procedures are presented in the Quality Assurance Project Plan (QAPP), included as Appendix B to the RDWP. A site-specific Health and Safety Plan (HASP) developed for the field activities associated with the RD is included as Appendix C to the RDWP.

This FSP describes the project sampling rationale and procedures that will result in data which meets the project objectives. The FSP is organized into the following sections:

- Section 1.0 - Introduction
- Section 2.0 - Sampling and Testing Objectives
- Section 3.0 - Sampling Location and Frequency
- Section 4.0 - Sample Designation and Documentation
- Section 5.0 - Sample Equipment and Procedures
- Section 6.0 - Sample Handling and Custody

1.1 Background and History

The Site is a 15-acre inactive facility located in the City of Elyria within Lorain County, Ohio. The Site is located on the northern edge of Elyria adjacent to Ford Road, about 1.5 miles from interchange 8 of the Ohio Turnpike/Interstate 90. There are approximately 2,500 people living within a one-mile radius of the Site. The nearest resident is approximately 200 feet northwest of the Site. The current owner of the Site is the Lorain County Metropolitan Parks District (the Park District).

An intermittent stream and a sewer main that is covered with rip-rap are present to the north of the landfill and a ravine and rural land are present to the south. The Black River is located relatively close to the east side of the landfill and the west side is bordered by Ford Road, and beyond Ford Road to the west is the Black River Preserve (a Park District Park).

The RI/FS and the ROD conclude that the slopes at the former landfill site appear to be stable. The steeper slopes at the landfill have remained in their current position for more than 35 years without evidence of slope failure aside from minor solifluction and slumping of surface soil. The majority of the former landfill appears to have an adequate cover of low-permeability soil. Landfill wastes are largely covered, with the exception of

some wastes, miscellaneous debris, and white goods that are located along the southern and northern landfill flanks. The landfill top is well graded and gently slopes southwest to northeast. A portion of the eastern side slope has a grade of approximately 2:1, horizontal to vertical (H:V), while the northern and southern portions of the east side slopes and the north and south side slopes are steeper, with maximum grades of approximately 1.2:1. The upper, gently-sloping portion of the landfill supports a dense growth of grass that is well maintained. The side slopes are generally covered with a dense growth of mature trees.

Prior to the start of landfill activities, the area sloped gently toward the river and included a wider flood plain than what is currently present. Much of the sloped area has been filled to approximately the same level as Ford Road, and a portion of the flood plain was incorporated into the landfill. Land-filling activities are believed to have begun with the placing of local municipal waste extending east from Ford Road in the early 1900s. The Site operated as a public landfill, charging tipping fees, until 1964. The Site was leased in 1964 and operated by several entities as a landfill until June 1974. During operation of the landfill in the 1960s and 1970s, municipal and industrial wastes in drums and in bulk were accepted, including, but not limited to: 700 tons of hazardous material; 3.3 million pounds of chemical wastes; and sludge (reportedly 32,000 gallons per day), from 1963 to 1970. Many of these wastes were burned onsite. Foundry sand, slag, and dried sludges were often used for cover material. Landfill operations ended in 1974.

Additional Site background and history are discussed in the RDWP. The current owner of the property is the Park District.

2. SAMPLING AND TESTING OBJECTIVES

The objectives of the sampling program are to gather data of adequate technical content, quality, and quantity to support the RD/RA for the Site. Samples will be collected at designated locations to ensure that a sufficient quantity of data is obtained to meet the goals of the RD/RA. The overall objective for each sampling task is to obtain data of sufficient quality and quantity to evaluate the current conditions of the landfill, such as of slope stability, and the thickness of the cover soil, and to verify the effectiveness of the remedy.

The QAPP outlines the data quality objectives and the corresponding quality assurance standards by which all sample acquisition and testing will be conducted as part of the field program. The QAPP presents the detailed site-specific laboratory protocols to be followed for ensuring the quality and integrity of the remedial design activities data, along with the accuracy and precision of the testing/analyses and the representativeness and completeness of the data.

3. SAMPLING LOCATION AND FREQUENCY

This section discusses sampling locations and frequencies for the RD activities. Included is a summary of previous investigations and the proposed activities to support the remedial design. Section 3.1 addresses the planned geotechnical investigation while Section 3.2 describes RA and potential contingency field activities. Detailed sampling and field procedures are provided in Sections 4 and 5.

3.1 Geotechnical Investigation

The following paragraphs summarize previous geotechnical investigations completed at the Site during the RI/FS, and Brown and Caldwell's (BC's) proposed geotechnical investigation to support the RD.

3.1.1 Previous Investigations

The most recent and comprehensive geotechnical investigation occurred during the RI/FS (BBL, 2006). The RI/FS included a geotechnical investigation to evaluate the landfill cover, and a qualitative slope stability evaluation. The geotechnical investigation focused on evaluating the landfill cover and included the collection of 15 thin-walled Shelby tube samples of the cover soil, one each from 15 soil borings (FR-SB-1 through FR-SB-15) drilled on the upper, flat portion of the landfill. Each Shelby tube was tested for moisture content, hydraulic conductivity, density, grain size distribution and Atterberg limits in accordance with ASTM methods. The thickness of the cover soil at each soil boring location was also determined. The soil borings were augmented by hand auger borings along the side slopes and physical inspection of the landfill slopes. The locations of these soil and hand auger borings and the corresponding cover thickness are illustrated on Figure 3-1. The RI/FS concluded that "sufficient existing landfill cover material was observed across the majority of the landfill with the exception of limited areas along both the northern and southern slopes and at two locations near the western perimeter of the landfill".

The RI/FS included a slope stability evaluation completed by H&A that consisted of physical inspection along random traverses on the top and flanks of the landfill. The evaluation culminated in preparation of a Technical Memorandum that was included in Appendix D to the RI/FS Report. The findings of the slope stability evaluation, as presented in the RI/FS Report, included of the following:

A detailed slope stability Site inspection was performed by H&A at the Site on March 31, 2004. The inspection was conducted through a series of random traverses on the top and flanks of the landfill and its immediate environs. The findings of the site inspection are summarized below:

- A majority of the top and slope coverings of the landfill are intact and support healthy vegetation, with no indication of current or impending instability;
- Portions of the landfill side slopes have relatively steep grades (ranging as high as 1.2:1 (horizontal to vertical ratio) and evidence of erosion was observed in these areas;
- Portions of the eastern slope of the landfill display evidence of some post-covering, local slumping, which has since been stabilized by minor earthwork and revegetation;
- The lower flanks of the landfill side-slopes do not display any evidence of erosion or degradation from normal or flood flows of the adjacent Black River;

- What appears to be a shallow road-cut at the base of the slope near the northeastern corner of the landfill has resulted in minor localized slumping of the slope immediately upgrade of the cut and was one of the locations at which a perennial leachate seep was observed;
- Storm water flow in the channel to which the Ford Road drainage culvert discharges is actively degrading the channel bed adjacent to the northern slope of the landfill. However, erosion of the channel bed would not impact the integrity of the landfill cover and was not identified as a significant concern; and
- The natural freeze-thaw processes will continue to promote the down-slope creep of near-surface soils and the tilting of trees on the slopes. However, the presence of healthy vegetation provides significant reinforcement and stabilization of the in-place slope-covering soil.

3.1.2 Proposed Geotechnical Investigation

The geotechnical investigation designed to compliment the work performed during the RI/FS and provide the additional information needed for the RD will consist the following three components:

- Completion of Geoprobe® soil borings on top of the landfill.
- Completion of seven soil boring pairs around the perimeter/toe of the landfill; and
- Completion of 12 hammer drill soil borings on the eastern side slope of the landfill.

The scope of work associated with each of these three components is discussed in the following subsections. Detailed sampling and field procedures are provided in Sections 4 and 5 of this FSP, while QA procedures are presented in the QAPP included as Appendix B to the RDWP.

3.1.2.1 Geoprobe® Soil Borings

Two of the locations on the upper surface of the landfill showed a soil cover thickness of less than the two feet required by the ROD and SOW. These two locations are identified as borings FR-SB-23B and FR-SB-24A and are shown in red on Figure 3-1 of the FSP. The two identified locations with less than two feet of soil cover are within the limits of waste but close to the edge of waste. An investigation is needed to delineate the size and shape of the area surrounding each of the locations where insufficient soil cover has been identified, and to define the limit of waste in this area.

The locations of the soil borings will be chosen in a manner to minimize the total number of soil borings that must be completed, but will be of sufficient number to delineate the boundary of the area(s) where the cap thickness is less than two feet. A grid of soil borings will be used to identify the extent of the area(s) with insufficient soil cover. The initial boring grid will begin close to the location where insufficient cover was found. In locations where the edge of thinner cover is not identified, additional step-out borings will be completed until the edge is identified in all directions. The limit of waste will also be approximately identified to determine how far to extend the cap repairs in that direction. Step-in borings may also be used to more clearly define the limits as needed. Geoprobe® borings will be used with continuous sampling to identify the interface between the soil cover and the waste material. The soil borings will also be used to define the western limit of waste material in this area.

A truck- or track-mounted Geoprobe® will be used to push the soil core through the soil cover to the underlying waste material. Upon retrieval of the full soil core, the BC field geologist will describe the soil cover lithology, thickness and recovery, and document the information in the field logbook. Additional soil borings may be added, based on the field data, to fully define the area with less than two feet of cover material and the western limit of waste material.

Upon completion of each Geoprobe® boring, it will be backfilled with bentonite pellets or chips and hydrated. Soil boring cuttings will be spread on the ground surface unless they contain waste material or evidence of contamination (e.g., odor, staining, etc.), then they will be containerized.

3.1.2.2 Perimeter Soil Borings

A total of seven soil boring locations (identified as FR-SB-44 through FR-SB-50) will be completed around the perimeter of the landfill near the toe of the landfill to evaluate slope stability. The proposed soil boring locations are shown on Figure 3-2. Each boring location will consist of drilling two soil borings (e.g., FR-SB-44A and FR-SB-44B) using a hollow-stem auger (HSA) drill rig equipped with 4.25-inch inside diameter HSAs. The first boring will be continuously sampled down to the top of bedrock using 2-feet long by 2-inch diameter split spoons and the Standard Penetration Test (SPT) via ASTM D1586 (Attachment A). Soil descriptions, sample recovery and the SPT blow counts will be recorded by BC's Field Geologist in the field logbook. Based on the lithology defined in the initial boring at each location, depth intervals will be targeted for geotechnical sample collection from the second soil boring to be completed at each location, approximately five feet from the original soil boring. Soil samples will be collected from the designated depths in the second boring using a combination of thin-walled Shelby tubes and split spoons. The samples will be hand delivered to the geotechnical laboratory for testing via ASTM methods for moisture content, grain size (via sieve and hydrometer), Atterberg limits, density, and consolidated undrained (CU) triaxial with pore pressure.

3.1.2.3 Side Slope Soil Borings

A total of 12 hammer drill soil borings (identified as FR-SB-51 through FR-SB-62) will be completed on the side slopes of the landfill to evaluate the soil cover thickness. The proposed hammer drill locations are shown on Figure 3-3. These soil borings will be completed using a hand-held gas or electric powered hammer drill and/or slide bar to drive a core sampler normal to the side slope until underlying waste material is encountered, or until a minimum of two feet of soil cover is observed. The lithology and thickness of the soil cover will be described and recorded by BC's Field Geologist in the field logbook.

If less than two-feet of cover soil is encountered at any of the original 12 boring locations, additional step-out or step-in borings may be completed to define the area of insufficient cover soil.

3.2 Contingency Investigations

In addition to those investigations defined above, additional, or contingency investigations may also be necessary during the RD/RA depending on the results of the initial investigations and evaluations. These contingency investigations might include monitoring well installation, groundwater sampling, monitoring well abandonment, and post-excavation sampling. The field procedures associated with these contingency investigations are discussed in general terms in the following subsections, so that if any aspect of these investigations are realized, this FSP will not need significant revisions. Instead, this FSP will be amended with a brief discussion of the additional scope and figure showing the sample or well locations.

3.2.1 Monitoring Well Installation

Additional monitoring wells are not proposed as part of the RD field investigation or the RA. Well replacements may be needed during the RA, if slope adjustments or buttressing results in covering areas where existing monitoring wells are located. If additional shallow monitoring wells or replacement wells are determined to be necessary, they will be installed consistent with those wells installed during the RI/FS. Wells will be constructed of two-inch diameter schedule 40 PVC well casing and screen. The well screen will include 0.010-slot well screen and a screen length of 5 to 10 feet, depending on the depth of the well. The well will be installed such that the shallow water table is contained within the screened interval. Wells will be installed through 4.25-inch I.D. HSAs create an approximately eight-inch diameter borehole. Well

construction will include a sand/filter pack around the screened portion of the well to a height of approximately one to two feet above the top of the screen, followed by a one- to two-foot bentonite seal, then grouted to ground surface. A measurement reference point will be marked on the top of the inner PVC well casing. Surface completion will include a steel, lockable, stick-up protective casing secured in a concrete surface pad.

During drilling, the soils will be continuously sampled via the SPT method (ASTM D1586) to establish the lithology of the subsurface and the location of the shallow water table. Following installation the new monitoring well(s) will be developed. Monitoring well installation and development will be in accordance with those procedures described in SOP No. 1 in Attachment A. Soil cuttings and development water will be managed in accordance with procedures described in Section 5-7.

Following installation, the horizontal/vertical position of the well will be surveyed by a licensed Ohio surveyor in accordance with the QA procedures described in the QAPP. The elevation of the measurement reference point on top of the inner PVC well casing will also be surveyed for elevation.

3.2.2 Groundwater Sampling

Groundwater sampling is not anticipated until after the RA is complete. However, if performed at any time during the RD/RA, it will be conducted in accordance with the QAPP and SOP No. 2 in Attachment A. Groundwater sampling will use "low-flow" purging and sampling techniques to the greatest extent possible, depending on the recovery rates of the wells sampled. Groundwater samples collected for analysis will be sent to the analytical laboratory to be analyzed for the specified parameters, which might include some combination of volatile organic compounds (VOCs), semi-volatile organic compounds (SVOCs), metals, and polychlorinated biphenyls (PCBs). Field parameters measured during purging/sampling may include pH, temperature, dissolved oxygen (DO), specific conductance and turbidity. Purge water will be managed in accordance with the procedures described in Section 5-7.

3.2.3 Monitoring Well Abandonment

Monitoring well abandonment, if performed, will be in conformance with procedures described in the document entitled "State of Ohio Technical Guidance for Sealing Unused Wells", dated 1996 (Attachment B), and in accordance with OAC 3745-9. The Technical Guidance additionally calls for completing a form for each well abandoned and submitting it to the Ohio Department of Natural Resources (ODNR). Copies of the well abandonment form(s) will also be submitted to USEPA.

Well materials removed during well abandonment will be managed in accordance with procedures described in Section 5-7.

3.2.4 Soil Sampling

The extent of soil excavation that will be necessary within the LNAPL-impacted area in the northeast corner of the Site is presently uncertain, and will be determined during the RD. If soil excavation is performed to remove impacted soil, then post-excavation sampling will be conducted to verify that the remaining soil meets the Performance Standards defined in the SOW. The rationale for determining the size of the excavation will be defined in the RD and will be based, at least in large part, on existing data contained in the RI/FS Report.

Once the limits of the excavation have been achieved using the excavation criteria described in the RD, soil sampling will likely be conducted for confirmation that sufficient soil has been removed. The precise post-excavation sampling strategy will be provided in the RD, but will likely include collecting composite samples. These samples will be submitted to the laboratory for analysis. Analyses will likely include some combination of metals and SVOCs, as well as PCBs to ensure the Performance Standards have been met. Analytical

procedures will consistent with those described in the QAPP. The post-excavation sample data will be shared and discussed with USEPA prior to initiating backfilling of the excavation.

4. SAMPLE DESIGNATION AND DOCUMENTATION

A key aspect of field sampling quality assurance involves the implementation of sampling documentation procedures. Proper development and implementation of these procedures ensures the integrity of a sample from collection to data reporting.

4.1 Field Sample Designation

Each sample collected during the pre-design field activities will receive a unique sample number. This sample number will be essential for tracking samples in the field and at the laboratory, and managing the resulting data.

In order to identify each sample collected, a sample-tracking scheme will be implemented which allows all samples to be traced to a specific location (e.g., well, soil boring, etc.), matrix, depth (as appropriate), and date of collection. These procedures are described in the QAPP and summarized below.

The method of identification of a sample depends on the type of measurement or analysis performed. When field screening measurements (e.g., pH, dissolved oxygen, or turbidity) are made, data are recorded directly in logbooks or on field investigation forms. Identifying information such as project name, station number, station location, date and time, name of sampler, field observations, remarks, or other pertinent information will be recorded.

Samples collected for laboratory analysis during the field investigation will be specifically designated for unique identification. Each sample will be designated by an alpha-numeric code which will identify the sampling location, type or as necessary depth.

Aqueous and solid samples collected as a part of the work will be assigned unique sample identifiers. The sample identifiers are required in order to identify and track each of the samples collected for analysis. Associated field QA/QC samples such as duplicates and field blanks will be further identified adding the date of collection to the sample name as shown below, and as needed a number will be added sequentially to distinguish the samples.

Each of the samples will be identified by a unique alpha-numeric code that indicates the particular sample type, location, and date. The format of the code is as follows:

The three codes that make up the sample identifier are described as follows:

1. The Site name – FR (Ford Road);
2. The medium/sample type codes are listed below:
   - MW - Groundwater sample taken from a monitoring well;
   - SW - Surface water sample;
   - SP - Seep sample;
   - SED - Sediment sample;
   - S - Soil sample
   - DW - Drummed waste sample;
   - W - Waste sample;

- SB - soil boring sample;
- TB - Trip Blank;
- FB - Field Blank sample;
- DUP - Duplicate sample; and
- MS/MSD – Matrix Spike/Matrix Spike Duplicate sample.

3. The location code will be keyed to the specific sample designation.

The following is an example of a sample identifier that will be used for samples collected for geotechnical laboratory analysis:

- FR-SB-48B-10-12: indicating that the soil sample was collected from the second boring at soil boring location FR-SB-48 from a depth of 10 to 12 feet below ground surface.

4.2 Laboratory Sample Identification Number

The geotechnical and analytical laboratories will assign a unique I.D. number to each sample submitted for testing. The laboratory will submit a deliverable to BC that provides a cross-reference between the laboratory sample I.D. and the field sample I.D.

4.3 Field Sampling Documentation

A critical aspect of data quality involves the development, use, and maintenance of a field sampling documentation system. A strict and thorough sampling documentation system will be utilized during sampling conducted at the Site. This documentation, which includes proper labeling of sample containers and field logbook entries, is essential for data tracking, sample custody, and overall data quality assurance.

4.3.1 Sample Labels

Sample labels are required on sample containers for the primary purpose of sample identification. Specific field data need not be recorded on the labels as they will be recorded on field data sheets and/or in the field logbook. The sample labels will contain the following information:

- Sample identification (see Section 4.1);
- Depth of sample (if appropriate);
- Analysis/test to be performed;
- An "up" arrow (Shelby tube samples only)
- Preservative (if required);
- Project name and number;
- Date and time of sample collection; and
- Initials of Sampler

4.3.2 Field Logbook

A bound weatherproof logbook, dedicated to the Site, will be kept by the sampling personnel. The Site logbook is a controlled document that records major on-site activities during the field investigation. At a minimum, the Site logbook will include a summary of sampling identifiers and shipment information, visitor's names and arrival/departure times, community contacts, and other site-specific information determined by the sampling personnel to be noteworthy. In addition, prior to field work each day, the personnel Site, the proposed activities, and the weather will be recorded in the Site logbook. Discussions of program activities,

field difficulties/problems, and deviations from the FSP, QAPP and/or other Site plans (with justification) must also be included in the logbook, along with corresponding times.

The sampling team or any individual performing a particular field investigation activity (e.g., soil or groundwater sampling) will be required to maintain a field logbook. Each logbook will be controlled and assigned a unique sequential identification by the sampling personnel.

Pertinent information to be recorded in field logbooks includes information that is necessary to reconstruct the investigative/sampling operations. Documentation of sample activities in the field logbook will be completed immediately after sampling at the location of sample collection. Logbook entries will contain sample information, including sample number, collection time, location, descriptions, field measurements, and other site- or sample-specific observations. Difficulties with sample recovery and other field observations (e.g., staining, visible contamination, etc.) will be noted if encountered.

If photographs are taken as part of the documentation procedure, the name of the photographer, the date, the time, and a description of the photo (including direction and scale, if applicable) will be entered sequentially in the field logbook as the photographs are taken. Once downloaded, the photographs will be numbered in correspondence to the logbook numbers, and the above information will be placed in a photographic log filed with the photographs and/or placed on the back of the photograph.

The field logbooks will have the name of the Site and project written on the cover and inside the cover. The date, page number and initials of the primary field note transcriber will be written atop each page during the day the entries are made. Corrections to the logbooks will consist of a single strike line through the incorrect entry, the new accurate information, the initials of the corrector, and the date of amendment. Any blank spaces/pages in the logbooks will be crossed out with a single strike mark and signed by the person making the notation.

4.3.3 Field Forms

During certain sampling events, specific field forms may be used to record field data. An example is for groundwater sampling where well-specific field forms may be used to record the purging and sampling data. However, basic sampling information will still be recorded in the field logbook.

5. SAMPLING EQUIPMENT AND PROCEDURES

To ensure that data generated for the remedial design are valid, consistent, and usable, BC will implement specific sample collection requirements. These requirements focus on the use of appropriate sample collection equipment and set forth specific procedures for sample collection. Also discussed are the proposed decontamination procedures and management of IDW.

5.1 Sample Collection Equipment

5.1.1 Equipment for Sampling Soils

Various pieces of field equipment that may be used to sample soils at the Site are described below.

- Scoops and Shovels

  Scoops and shovels are used to collect surface soils or sediments. Scoops and shovels are made of a variety of materials including stainless steel, wood, plastic, or Teflon®. Scoops or shovels may be used to collect shallow bulk samples for geotechnical testing.

- Hand Auger

  The hand-powered auger consists of a steel drill bit at the end of a bucket, a drill rod and a T-shaped handle. The auger is used to drill a borehole to a desired depth, usually not more than 4 feet below the surface (depending upon the material encountered). The soil sample is brought to the surface when the auger is withdrawn.

- Soil Corer

  The soil corer consists of a small diameter, hollow, thin-walled metal tube. Their length can vary from six inches to two feet. It can be used to obtain an undisturbed soil profile sample from the surface to a maximum depth of approximately eight feet. The soil corer can be driven either manually by a slide hammer, or using a gas or electric powered hammer drill. Soil corer and slide hammer manufacturers include AMS. Hammer drill manufacturers include Bosch.

- Split Spoon

  Split spoon samplers are used to collect soil samples from a wide variety of soil types at greater depths than obtainable with most other soil sampling devices. A split spoon sampler consists of a heavy steel sampling tube that can be split longitudinally into two equal halves. Split spoons and Shelby tubes (below) are most commonly used when drilling borings with a hollow stem auger drill rig. The split spoon is attached to a drill rod and is forced into the ground by hammering in accordance with ASTM Method D1586. After the desired depth is reached, the split spoon is extracted from the ground and opened to obtain a soil profile sample.

- Shelby Tube

  A Shelby tube is used to obtain an undisturbed sample of soil for determining geotechnical characteristics. It is constructed of metal and has an outside diameter of 2 to 5 inches and a length of 24 to 54 inches. The sampler is advanced through the soil without rotation in a smooth motion. When retrieved, the ends of the sampler are capped with wax, and the sample is sent to the geotechnical laboratory for testing. Shelby tube sampling will be performed in accordance with ASTM Method D1587.

- Macro-Core Sampler

  The macro-core sampler is used when drilling soil borings with the Geoprobe®. The sampler consists of a four-foot long, 2-inch diameter stainless steel barrel with a threaded cutting shoe at its base. Soil samples are collected by attaching the sampler to push rods and pushing or hammering the sampler into the subsurface using the hydraulics on the Geoprobe® rig. The soil samples are contained in disposable, clear acetate liners within the drive barrel. The liner is replaced after each sample is obtained.

- Large Core Sampler

  The large core sampler is also used with the Geoprobe® and is useful when caving of the boring occurs. The sampler consists of a two-foot long, 1-3/8-inch-diameter stainless steel barrel with a threaded cutting shoe at its base. It is a piston-type sampler that recovers soil from discrete depths. Soil samples are collected by attaching the sampler to push rods used to advance the sealed sampler to the top of the depth interval of interest, then releasing a stop pin from the drive head within the push rods. Once the stop pin is released, the sampler is advanced an additional 24 inches. As the sampler is advanced, the drive point/piston retracts allowing the soil to enter the sampler. The soil samples are contained in disposable, clear liners within the drive barrel.

5.1.2 Equipment for Sampling Groundwater

Various pieces of field equipment that may be used to sample groundwater at the Site are described below.

- Bailer

  A bailer is a cylindrical device with a check valve that is made of Teflon®, PVC or stainless steel. It is designed to collect liquid samples from groundwater monitoring wells, and may also be used to sample liquids in pits or tanks. Bailers may be dedicated, field cleaned, or disposable. For groundwater sampling at the Site, bottom-emptying, dedicated/disposable Teflon® bailers will be used to sample each well scheduled to be sampled.

- Peristaltic Pump and Tubing

  A peristaltic pump may be used to purge/sample the shallow wells at the Site. The pump consists of a circular series of rollers that successively squeeze a section of flexible tubing, creating a vacuum. A section of polyethylene tubing is connected to the pump silicone tubing and lowered into the well to the desired depth. Flow is regulated with a rheostat-type controller located on the pump. The pumps run on internal batteries, or external AC or 12 volt DC power. Dedicated/disposable tubing will be used to sample each well at the Site.

- Submersible Pump and Tubing

  A Grundfos® 2-inch diameter submersible electric pump may be used to sample wells at the Site. The pump is constructed of stainless steel with a Teflon® impeller, and is easily decontaminated between wells. Flow is regulated with a rheostat-type controller located at the surface. AC power is usually provided by a generator. Polyethylene tubing connected to the pump will be dedicated/disposable, and changed between well locations.

5.2 Field Instrumentation

Brown and Caldwell may utilize various field instruments at the Site. All instruments will be operated according to the manufacturer's specifications. Instruments requiring calibration will be calibrated prior to daily use according to the manufacturer's recommendations. Calibration results will be documented in the field logbook.

5.2.1 Interface Probe

An interface probe (IP) will be used to measure liquid levels in monitoring wells and to measure LNAPL thickness, if any. Measurements obtained using IP will be documented in the field logbook.

The depth to liquid(s) will be measured in existing monitoring wells using an IP. The probe will be lowered into the well until the meter indicates liquid has been contacted via emission of an audible tone. The IP emits different audible tones when encountering LNAPL versus groundwater. Generally, a solid tone indicates LNAPL, whereas an intermittent tone indicates groundwater. The depth from the surveyed reference mark atop the well inner casing to the top of the first liquid encountered will be measured on the tape at least three times or until a consistent value is obtained. The value will be recorded to the nearest 0.01 feet on field data sheets and/or the field logbook, along with the type of liquid encountered (LNAPL or groundwater). The procedure will be repeated to measure the depth to the LNAPL/groundwater interface (i.e., the groundwater surface) where both phases are present. Due to the difficulties sometimes encountered in attempting to obtain an accurate depth to the LNAPL/groundwater interface, care will be taken when measuring this depth.

5.2.2 Groundwater Multi-Parameter Meter

Groundwater samples will be field tested with a multi-parameter meter in a flow-through cell. Groundwater will be tested during purging and just prior to sample collection to provide an indication of field parameter stability over time. The meter will be used to measure pH, specific conductance, temperature, dissolved oxygen, and turbidity. A commercially available instrument will be used. All parameter values will be reported in the field logbook and/or field sample data sheets. Operation and calibration will be in accordance with instrument's owner manual. The instrument will be calibrated at a minimum of before each day of use.

5.2.3 Photoionization Detector

A photoionization detector (PID) may be used to detect total organic vapors during various field activities for the health and safety of field personnel. Use of the PID is described in the HASP.

5.2.4 Multi-Gas Detector

A multi-gas detector may be used to detect methane, hydrogen sulfide and the lower explosive limit (LEL) during various field activities for the health and safety of field personnel. Records will be maintained for all measurements taken including borings advanced through the landfill cap to the top of waste material. Use of the multi-gas detector is described in the HASP.

5.3 Sample Collection Procedures

5.3.1 Soil Sampling

Soil sampling during the pre-design investigation will include Geoprobe® soil borings, perimeter soil borings using a hollow-stem-auger (HSA) drill rig, and hammer drill soil borings. The sampling procedures are described in the following paragraphs, and contingency sampling procedures for chemical analysis are included in the event that such sampling is needed at some point during the RD/RA. Upon completion of the field program, each soil boring location will be surveyed for horizontal and vertical position by a licensed Ohio surveyor in accordance with the QA procedures described in the QAPP.

5.3.1.1 Geoprobe® Soil Borings

The Geoprobe® soil borings will be sampled continuously from the ground surface to the top of the underlying waste material, to a maximum depth of approximately two-feet below the ground surface. Soil samples will be

collected in four-foot-long macro-core samplers. An acetate liner will be placed within the sampler. Upon recovery, the sampler will be opened and the liner containing the soil will be removed.

The driller will slit the liner longitudinally and BC's field geologist will log the color, texture, and moisture content of the sample, differentiating between cover and waste material. This information, as well as the percent of recovery in the liner and sample depth, will be recorded in the field logbook. Any visual or other evidence of contamination such as staining or odors will also be recorded. Each boring will be advanced until the depth to the cover/waste interface can be clearly identified, and recorded.

Upon completion of each Geoprobe® boring, it will be backfilled with bentonite pellets or chips and hydrated. Soil boring cuttings will be spread on the ground surface unless they contain waste material or evidence of contamination (e.g., odor, staining, etc.), then they will be containerized as described in Section 5.7.

5.3.1.2 Perimeter Soil Borings

Soil samples from the perimeter borings will be collected using standard hollow-stem-auger methods and split-spoon and Shelby tube samplers. It is anticipated that any auger drilling will be performed with 4.25-inch inside-diameter, hollow-stem augers. Each perimeter soil boring location will consist of two borings, drilled approximately five feet apart. The first boring will be used to continuously sample the subsurface materials down to the top of bedrock, while the second boring will be used to obtain the Shelby tube(s) and soil samples for geotechnical testing. The intervals identified for geotechnical testing will be based on the lithology of the first boring, and discussions with BC's Project Manager and Geotechnical Engineer. Therefore, the actual depths of the samples for geotechnical testing cannot be pre-determined in this FSP.

The first boring at each location will be continuously sampled using split spoons in accordance with the SPT via ASTM Method D1586 (see Attachment A). This method consists of driving the split spoon sampler using a 140-pound weight (or auto-hammer) and 30-inch drop. The number of blows needed to drive the split spoon each six inches is recorded. A pocket penetrometer and Torvane® shall be used by the Field Geologist to measure the respective soil consistency and shear stress of cohesive soils. The boring will be advanced until bedrock is encountered, which will be when 50 hammer blows fails to advance the split spoon two inches, or 100 blows cannot advance the split spoon six inches. Typically, the presence of bedrock can be verified by inspecting the shoe of the split spoon for pieces of bedrock. Bedrock is anticipated to be encountered at a depth of approximately 15 feet in the perimeter borings.

Upon retrieving each split spoon, the SPT blow counts will be recorded in the field logbook, along with the percent recovery in the split spoon and the description of the soil, including depth of sample, color, texture, grain size, evidence of contamination, etc. A representative portion of each split spoon sample will be retained in a labeled zip-lock storage bag for future reference.

Once the first boring has been logged, the Field Geologist will contact BC's Project Manager and/or Geotechnical Engineer to discuss the findings and to identify the target depth interval(s) in the companion boring for geotechnical testing. The second boring will then be advanced down to the top of the first target interval, at which point a Shelby tube will be driven in accordance with ASTM Method D1587 (see Attachment A). Upon retrieval of the Shelby tube, both ends will be inspected and the percent recovery and soil types recorded. Each tube shall be labeled with an "up" arrow and the amount of recovery. Approximately, one to two inches of material shall be removed from the ends of the tube and wax shall be poured into the tube to provide an air tight plug (approximately one to two-inches thick) against the soil in accordance with ASTM D1587. A plastic cap shall be placed over each end of the tube, sealed with duct tape and dipped in a pan of melted wax. The Shelby tubes will be stored upright in a secure area, protected from extreme heat or freezing, prior to hand delivery to the geotechnical laboratory. If soil recovery in the Shelby tube is insufficient to complete the prescribed geotechnical testing, then either an additional Shelby tube or

split-spoon samples may be obtained from the soil boring, or a third adjacent soil boring, to obtain the necessary sample volume and type. The proposed geotechnical tests, associated ASTM method, and sample container type are shown in Table 5-1.

Upon completion of each boring location, the two borings will be backfilled with a bentonite/cement slurry via the tremie method to grade as the augers are removed. However, the soil borings will not be backfilled until both borings at a location are completed. Soil boring cuttings will be spread on the ground surface unless they contain waste material or evidence of contamination (e.g., odor, staining, etc.), then they will be containerized as described in Section 5.7.

5.3.1.3 Side Slope Soil Borings

Hammer drill soil borings will be completed on the side slope of the landfill. These borings will be completed by driving the soil corer either with a hand slide hammer or a gas or electric powered hammer drill (such as a Bosch Model 11245 drill or equivalent). Upon retrieval of the full soil corer, BC's field geologist will carefully extrude the soil and log the color, texture, and moisture content of the sample, differentiating between cover and waste material. This information, as well as the percent of recovery in the corer and sample depth, will be recorded in the field logbook. Any visual or other evidence of contamination such as staining or odors will also be recorded. The corer will then be re-inserted into the borehole and the procedure repeated. Each boring will be advanced until the depth to the cover/waste interface can be clearly identified, and recorded.

Upon completion of each hammer drill location, the borehole will be backfilled with bentonite pellets or chips and hydrated. Waste material recovered from the boring will be containerized as described in Section 5.7, while uncontaminated cover soil recovered from the boring will be spread on the ground surface.

5.3.2 Groundwater Sampling

It is not anticipated that groundwater sampling will be needed until after the RA is complete. However, if groundwater sampling were to be needed at any time during the RD/RA, it will be performed in accordance with SOP No. 2 in Attachment A. Groundwater sampling will consist of four tasks:

1. Water level measurement and immiscible layer detection;
2. Well purging;
3. Field testing for pH, specific conductance, temperature, dissolved oxygen, and turbidity; and
4. Sampling.

Before each well is sampled, the well will be inspected for integrity. Any non-dedicated sampling equipment will be decontaminated before sampling each well following the procedures described in Section 5. A complete round of liquid level measurements will be obtained from all Site wells prior to purging/sampling begins. . Measurements will be made consecutively in a minimal amount of time to avoid any effects of temporal fluctuation in water levels.

Wells will be purged and sampled with a submersible or peristaltic pump. Wells may also be sampled with a disposable bailer. Bottom-emptying bailers will be used when bailer sampling of VOCs is necessary.

During well purging, wells that recover in a reasonable amount of time will be purged of three well volumes and sampled as soon as possible thereafter. Low yielding wells will be purged to dryness. All wells will be sampled within 24 hours of purging. Field parameters such as pH, conductivity, temperature and turbidity of the groundwater will be monitored periodically during purging, and measurements will be noted in the field logbook and/or field forms.

Following purging, the well will be sampled according to SOP No. 2 in Attachment A which also discusses the prioritized order of collection of samples for various parameters. Samples for analysis for dissolved metals, if required, will be field filtered following the procedures specified in SOP No. 2.

5.4 Field Quality Control Samples

Because the samples to be collected for geotechnical testing will not be subjected to chemical analysis, field quality control samples for the geotechnical testing will not be necessary. Field quality control samples for the other types of potential sampling that may be completed during the RA or in subsequent work are discussed in the QAPP and summarized in the following subsections.

5.4.1 Trip Blank

One trip blank will be submitted to the laboratory with each shipment of samples for volatile organic analysis. The analysis of this blank will provide a baseline measurement of any contamination to which the samples may have been exposed during transport. A trip blank is comprised of a sample bottle provided by the laboratory filled with deionized, organic-free water, preserved, handled like a sample, and returned to the laboratory for analysis. Trip blanks will be prepared by the analytical laboratory and will be submitted for both liquid and solid samples.

5.4.2 Equipment Blank

One equipment blank will be collected per sampling episode per sampled medium or at a frequency equal to approximately 5% of the samples collected for each medium, whichever is larger. The analysis of these blanks serves to verify the cleanliness of the sampling equipment. An equipment blank is collected by rinsing decontaminated field equipment with water, transferring the water to a sample bottle, and submitting the sample for analysis. Deionized, organic-free water provided by the laboratory will be used for the field blanks. The equipment blank will be analyzed for the same parameters as the samples associated with that equipment.

5.4.3 Field Duplicates

Approximately 5% of all the samples will be collected in duplicate and submitted for laboratory analysis. Duplicates are two samples collected independently from one sampling location during a single episode of sampling. Duplicates provide information about sample variability.

5.4.4 Matrix Spike/Matrix Spike Duplicates

Matrix spike and matrix spike duplicates (MS/MSDs) are a quality control requirement performed by the laboratory. It is necessary to collect three times the usual required volume for aqueous samples to be analyzed as MS/MSDs. No additional sample volume is necessary for solid samples. At a minimum, additional volume for one sample will be provided to the laboratory for every group of 20 samples collected per medium and matrix.

5.5 Environmental Conditions

Sampling at the Site may be conducted at any time of year, regardless of the weather. Extreme heat or cold will require increased attention to health and safety issues, and may impact the duration of work. Equipment such as Geoprobe® or hollow-stem auger rigs require longer warm-up times in cold weather. Some areas of the Site may be impassable to vehicles and personnel during wet periods or when the Black River is at flood stage. Consideration shall be given to these and other relevant weather impacts before scheduling field work.

5.6 Decontamination Procedures

Sampling equipment decontamination procedures will vary depending on the field task. The various levels of decontamination to be performed between sampling locations for the various types of field activities are described below.

Level 1 (Geotechnical Sampling Equipment, Split-Spoons, Trowels, etc.)

- Wash/scrub with potable water; and
- Potable water rinse.

Level 2 (IP, Water Level Meter and Probes)

- Rinse with laboratory detergent/distilled water solution; and
- Rinse with distilled water.

Level 3 (Sampling Equipment that comes in Direct Contact with the Analytical Sample Media)

- Wash/scrub with laboratory detergent/distilled water solution;
- Distilled water rinse,
- Laboratory-grade methanol rinse (if organic analyses are planned);
- Distilled water rinse;
- Laboratory-grade 10% nitric acid rinse (if metals analyses are planned); and
- Final distilled water rinse.

The waste water generated from the decontamination procedures will be containerized and managed as described in Section 5.7.

5.7 Investigation Derived Waste

Investigation derived waste (IDW) generated from field activities will be containerized in labeled 55-gallon DOT-approved steel drums and staged at a pre-designation location at the Site for characterization and disposal or retention on the site for incorporation into the landfill during the RA. Information contained on the label will include the drum contents, name, address and telephone number of generator, date(s) the material was placed in the drum, and a BC contact name/telephone number. Wastes will be separated based on type. For example, separate drums will be filled for solid landfill waste, contaminated soil, monitoring well development and purge water, decontamination wastewater, LNAPL, used personal protective equipment (PPE), and general trash. If a sufficient quantity of general trash is expected, then a dumpster or rolloff might be staged for this material instead of drums.

For liquid wastes, characterization of the drummed IDW will consist of collecting a composite sample from drums of similar contents and sending the sample to the analytical laboratory to be analyzed for the parameters required by the designated waste receiving facility. Characterization sampling will occur as soon as possible following field activities to ensure compliance with all local, state and federal regulations regarding storage of IDW. In the case of solid matrix IDW, these wastes may be placed in the on-site landfill beneath the cap during the RA.

Investigation generated wastes will be disposed in accordance with applicable Federal, State, and Local regulations.

6. SAMPLE HANDLING AND CUSTODY

An important aspect of field sampling quality assurance involves proper sample handling and strict chain of custody protocol. Improper sample handling may lead to results that are not representative of the materials sampled. BC will take precautions while handling samples to maintain the integrity of the sample. Such precautions include employing proper sample transfer procedures, use of proper sample containers, use of proper sample preservation techniques, and observing sample holding times.

6.1 General Sampling Protocols

6.1.1 Sample Containers

Table 5-1 describes the sample containers needed for the various geotechnical tests. Table 6-1 describes the sample containers needed for the various potential analytical analyses.

6.2 Chain-of-Custody

The chain-of-custody procedures are initiated in the field following sample collection. The procedures consist of: (1) preparing and attaching a unique sample label to each sample collected, (2) completing the chain-of-custody (COC) record, and (3) preparing and packing the samples for shipment. These procedures are briefly described in the following subsections.

6.2.1 Sample Labels

Field personnel are responsible for uniquely identifying and labeling all samples collected during the field investigation program. All labeling must be completed in indelible/waterproof ink and securely affixed to the sample container.

All sample containers will be affixed with label that will contain the following information:

- Sample identification (see Section 4.1); Depth of sample (if appropriate);
- Analysis/test to be performed;
- An "up" arrow (Shelby tube samples only)
- Preservative (if required);
- Project name and number;
- Date and time of sample collection; and
- Initials of Sampler

6.2.2 Chain-of-Custody Record

The Brown and Caldwell COC record, as shown in Figure 6-1, will be completed for the geotechnical samples submitted to the laboratory. These forms are maintained as a record of sample collection, transfer, shipment, and receipt by the laboratory. These forms also contain pertinent information concerning sampling location, date, and times, signatures of at least one team member; types of samples collected along with a unique sample

identification number; the number of samples collected and shipped for testing, the requested tests, the project number, and the name of the laboratory to which the samples are being sent.

6.2.3 Transfer of Custody

Samples will be accompanied by COC form during each step of custody, transfer, and shipment. When physical possession of samples is transferred, both the individual relinquishing the samples and the individual receiving them will sign, date, and record the time on the COC form.

6.3 Sample Packaging and Shipment

Following sample collection, all samples will be brought to an onsite location for batching and paperwork checks. Label information is checked to ensure there is no error in sample identification. The samples will be packaged to prevent breakage and/or leakage, and staged awaiting hand delivery to the geotechnical laboratory on a weekly basis.

7. REFERENCES

American Society of Testing Materials (ASTM), 2008. *Annual Book of ASTM Methods*, 2008.

BBL, 2006. *Remedial Investigation/Feasibility Study Report, Ford Road Landfill Site, March, 2006*.

Brown and Caldwell, 2009. *Remedial Design Work Plan, Ford Road Landfill Site, August 2009*.

USEPA, 1988. *Guidance for Conducting Remedial Investigations and Feasibility Studies under CERCLA, October, 1988*.

FIGURES

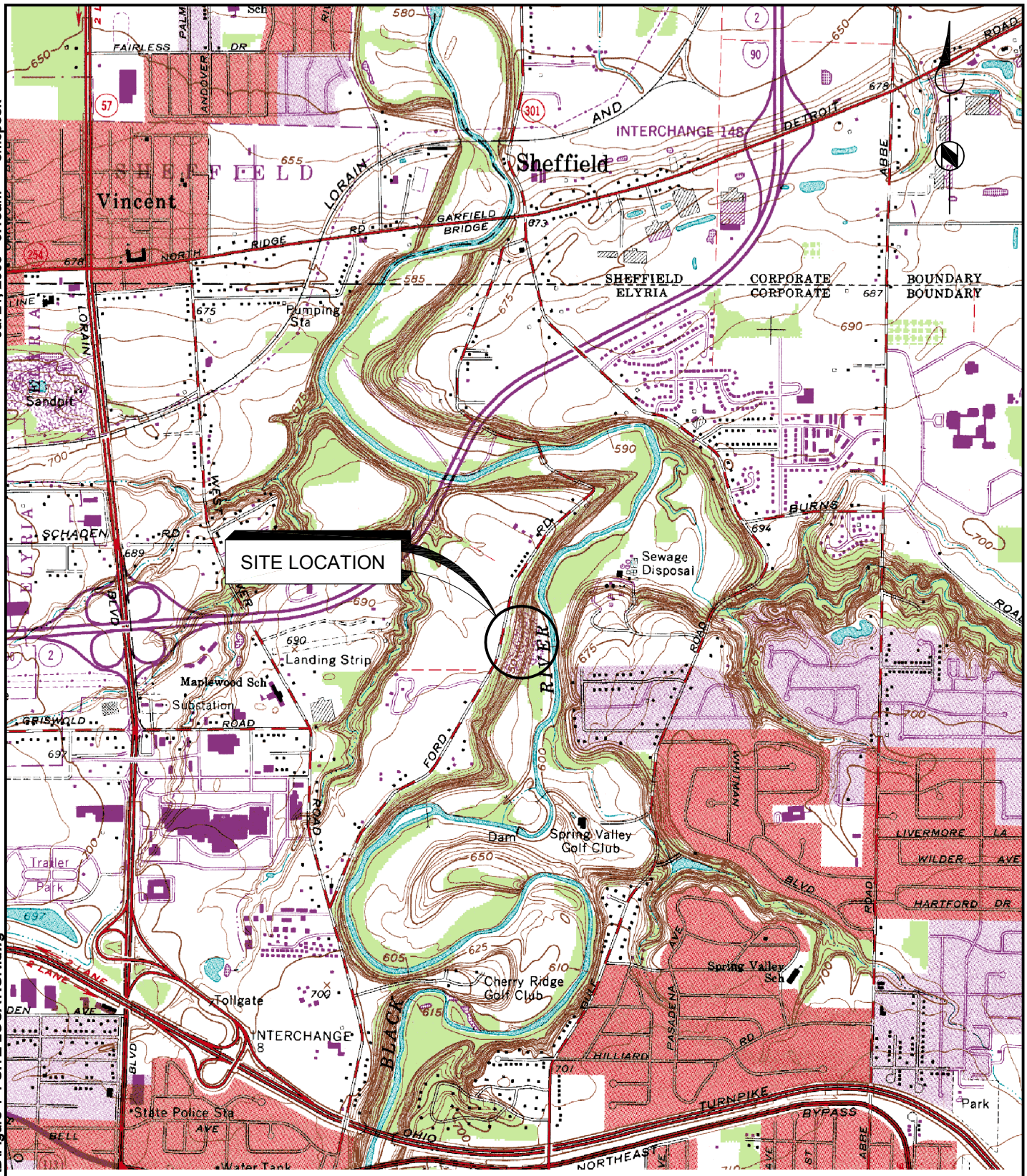

FORD ROAD LANDFILL
ELYRIA OHIO
SOURCE: BASE MAP USGS 7.5 MIN. QUAD., AVON, OH, 1994

0 2000 4000
SCALE IN FEET

BROWN AND CALDWELL

Figure 1-1
SITE LOCATION

Jul 21, 2009 - 9:18am emcpeek

P:\Ford Road\Drawings\CAD\Figure 1-1 SITE LOCATION.dwg

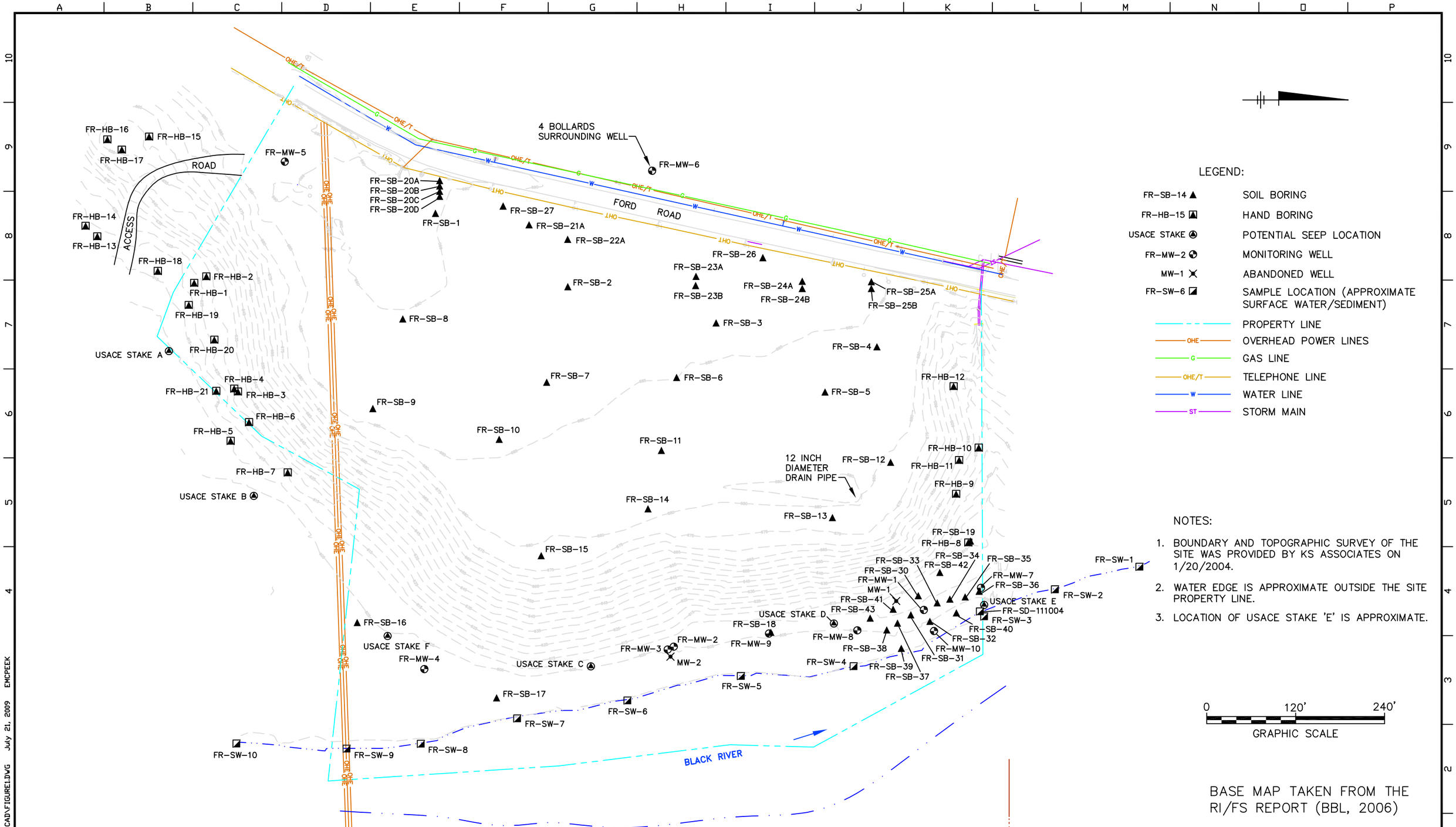

BROWN AND CALDWELL
COLUMBUS, OHIO

SUBMITTED: _____ PROJECT MANAGER DATE: _____
APPROVED: _____ BROWN AND CALDWELL DATE: _____

LINE IS 1 INCH AT FULL SIZE (IF NOT 1" - SCALE ACCORDINGLY)
DESIGNED: JAP
DRAWN: MSK
CHECKED:
CHECKED:
APPROVED:

EXTERNAL REFERENCES

REVISIONS					
ZONE	REV.	DESCRIPTION	BY	DATE	APP.

FORD ROAD LANDFILL, ELYRIA OHIO

SITE PLAN

FILENAME GEO_BOR_LOC.DWG
BC PROJECT NUMBER 137355
CLIENT PROJECT NUMBER
FIGURE NUMBER 1-2

P:\FORD ROAD\DRAWINGS\CAD\FIGURE1.DWG July 21, 2009 EMCPEEK
6/22/09

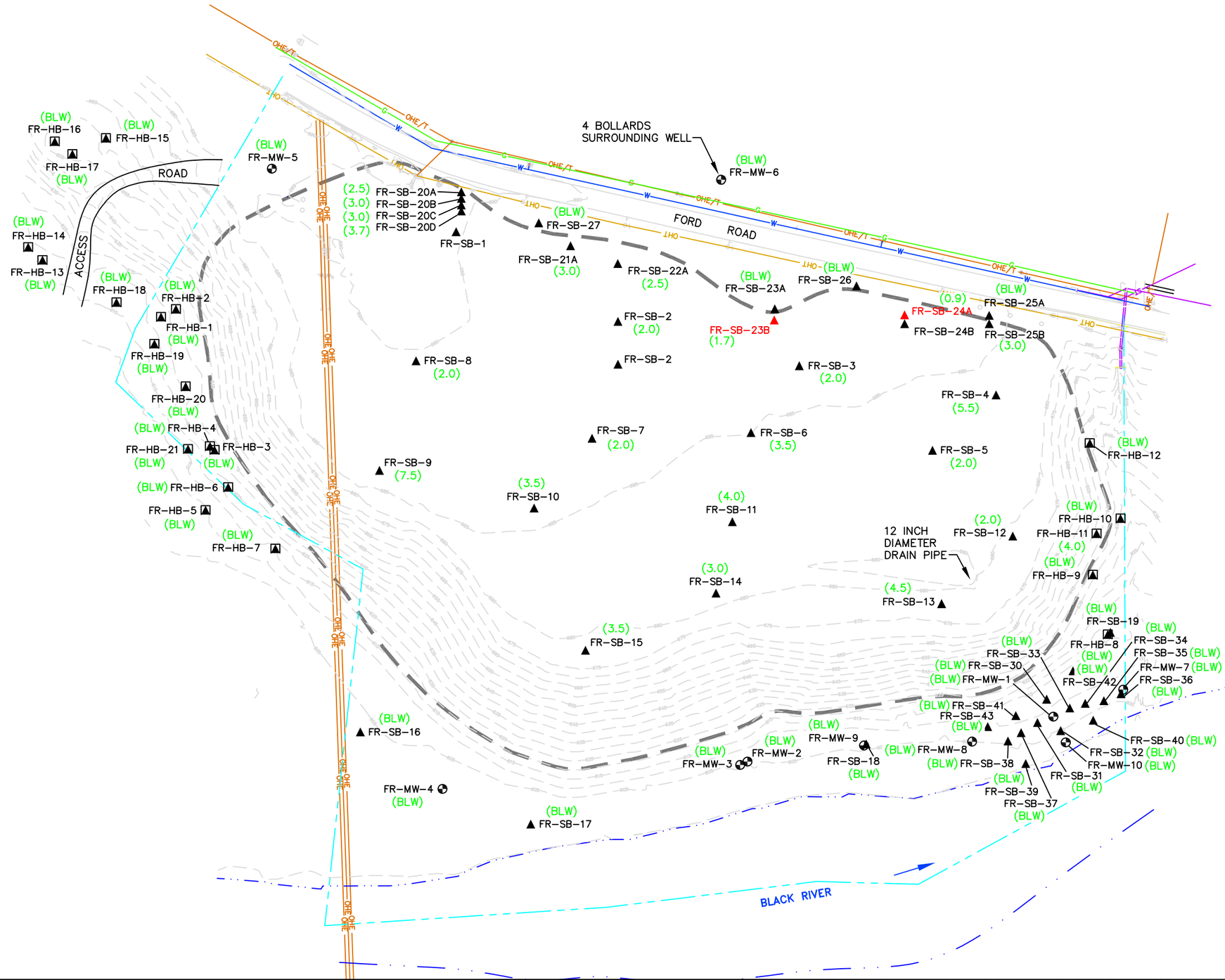

LEGEND:

FR-MW-2	MONITORING WELL
FR-SB-14	SOIL BORING
FR-SB-14	RI/FS SOIL BORINGS INDICATING LESS THAN 2-FT OF COVER
FR-HB-15	HAND BORING
	PROPERTY LINE
OHE	OVERHEAD POWER LINES
G	GAS LINE
OHE/T	TELEPHONE LINE
W	WATER LINE
ST	STORM MAIN
(2.0)	LANDFILL COVER THICKNESS (FEET). BLW = BEYOND LIMITS OF WASTE
	APPROXIMATE LIMIT OF WASTE

NOTES:

1. BOUNDARY AND TOPOGRAPHIC SURVEY OF THE SITE WAS PROVIDED BY KS ASSOCIATES ON 1/20/2004.
2. WATER EDGE IS APPROXIMATE OUTSIDE THE SITE PROPERTY LINE.
3. LOCATION OF USACE STAKE 'E' IS APPROXIMATE.

0 120' 240'

GRAPHIC SCALE

BASE MAP TAKEN FROM THE RI/FS REPORT (BBL, 2006)

BROWN AND CALDWELL

COLUMBUS, OHIO

SUBMITTED: _____ DATE: _____
PROJECT MANAGER

APPROVED: _____ DATE: _____
BROWN AND CALDWELL

LINE IS 1 INCH AT FULL SIZE (IF NOT 1" - SCALE ACCORDINGLY)

DESIGNED: JAP
DRAWN: MSK
CHECKED:
CHECKED:
APPROVED:

EXTERNAL REFERENCES

REVISIONS					
ZONE	REV.	DESCRIPTION	BY	DATE	APP.

FORD ROAD LANDFILL, ELYRIA OHIO

PROPOSED GEOPROBE SOIL BORING LOCATIONS

FILENAME GEO_BOR_LOC.DWG

BC PROJECT NUMBER 137355

CLIENT PROJECT NUMBER

FIGURE NUMBER 3-1

P:\FORD ROAD\DRAWINGS\CAD\FIGURE9.DWG August 27, 2009 MSKDTB

6/22/09

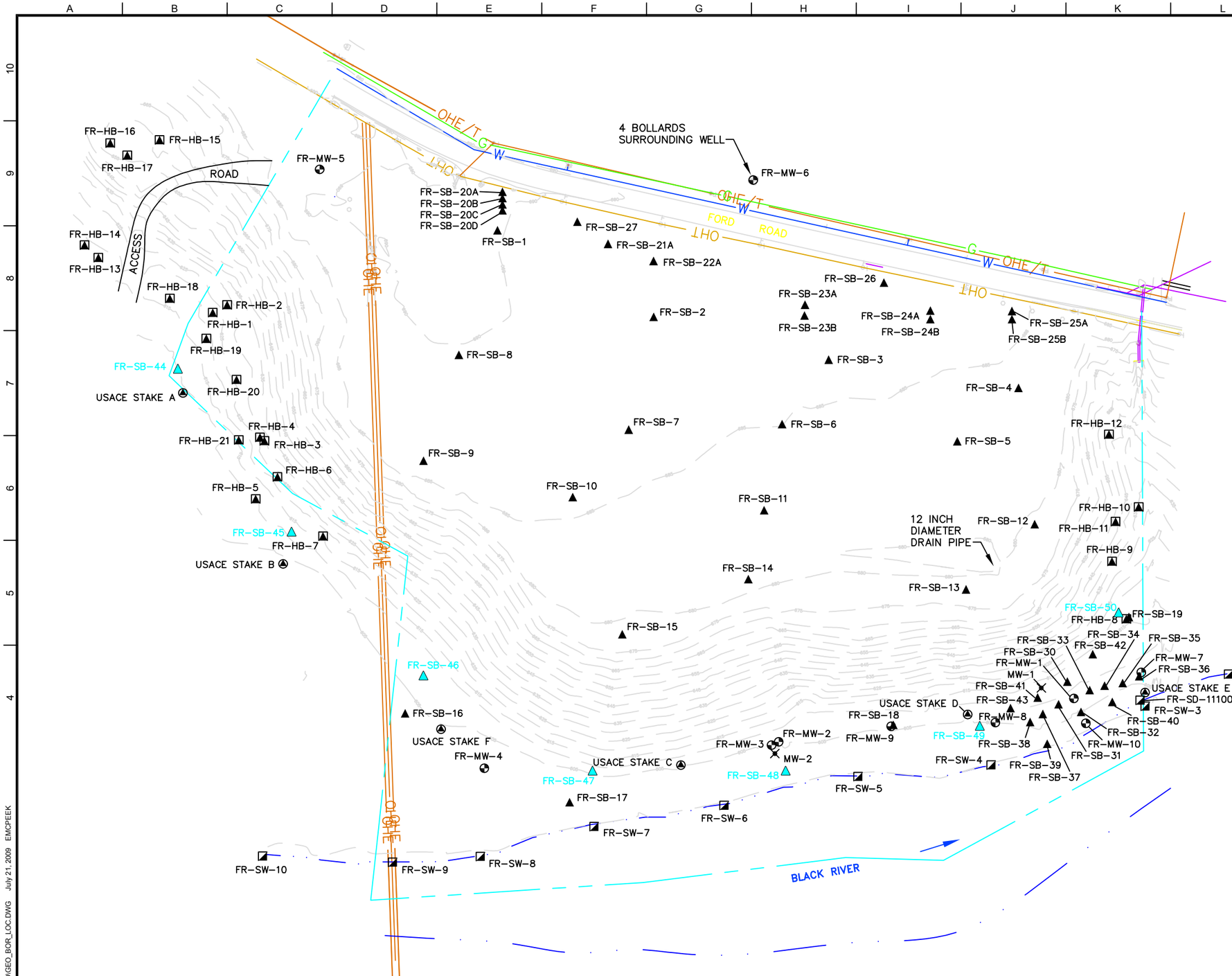

LEGEND:

FR-SB-44	PROPOSED SOIL BORING
FR-SB-14	SOIL BORING
FR-HB-15	HAND BORING
USACE STAKE	POTENTIAL SEEP LOCATION
FR-MW-2	MONITORING WELL
MW-1	ABANDONED WELL
FR-SW-6	SAMPLE LOCATION (APPROXIMATE SURFACE WATER/SEDIMENT)
	PROPERTY LINE
OHE	OVERHEAD POWER LINES
G	GAS LINE
OHE/T	TELEPHONE LINE
W	WATER LINE
ST	STORM MAIN

NOTES:

1. BOUNDARY AND TOPOGRAPHIC SURVEY OF THE SITE WAS PROVIDED BY KS ASSOCIATES ON 1/20/2004.
2. WATER EDGE IS APPROXIMATE OUTSIDE THE SITE PROPERTY LINE.
3. LOCATION OF USACE STAKE 'E' IS APPROXIMATE.

0 120' 240'

GRAPHIC SCALE

BASE MAP TAKEN FROM THE RI/FS REPORT (BBL, 2006)

BROWN AND CALDWELL

COLUMBUS, OHIO

SUBMITTED: _____ DATE: _____
PROJECT MANAGER

APPROVED: _____ DATE: _____
BROWN AND CALDWELL

LINE IS 1 INCH AT FULL SIZE (IF NOT 1" - SCALE ACCORDINGLY)

DESIGNED:
DRAWN:
CHECKED:
CHECKED:
APPROVED:

EXTERNAL REFERENCES

REVISIONS

ZONE	REV.	DESCRIPTION	BY	DATE	APP.

FORD ROAD LANDFILL, ELYRIA OHIO

PROPOSED PERIMETER SOIL BORING LOCATIONS

FILENAME: GEO_BOR_LOC.DWG

BC PROJECT NUMBER: 137355

CLIENT PROJECT NUMBER

FIGURE NUMBER: 3-2

P:\FORD ROAD\DRAWINGS\CAD\GEO_BOR_LOC.DWG July 21, 2009 EMCPEEK

6/22/09

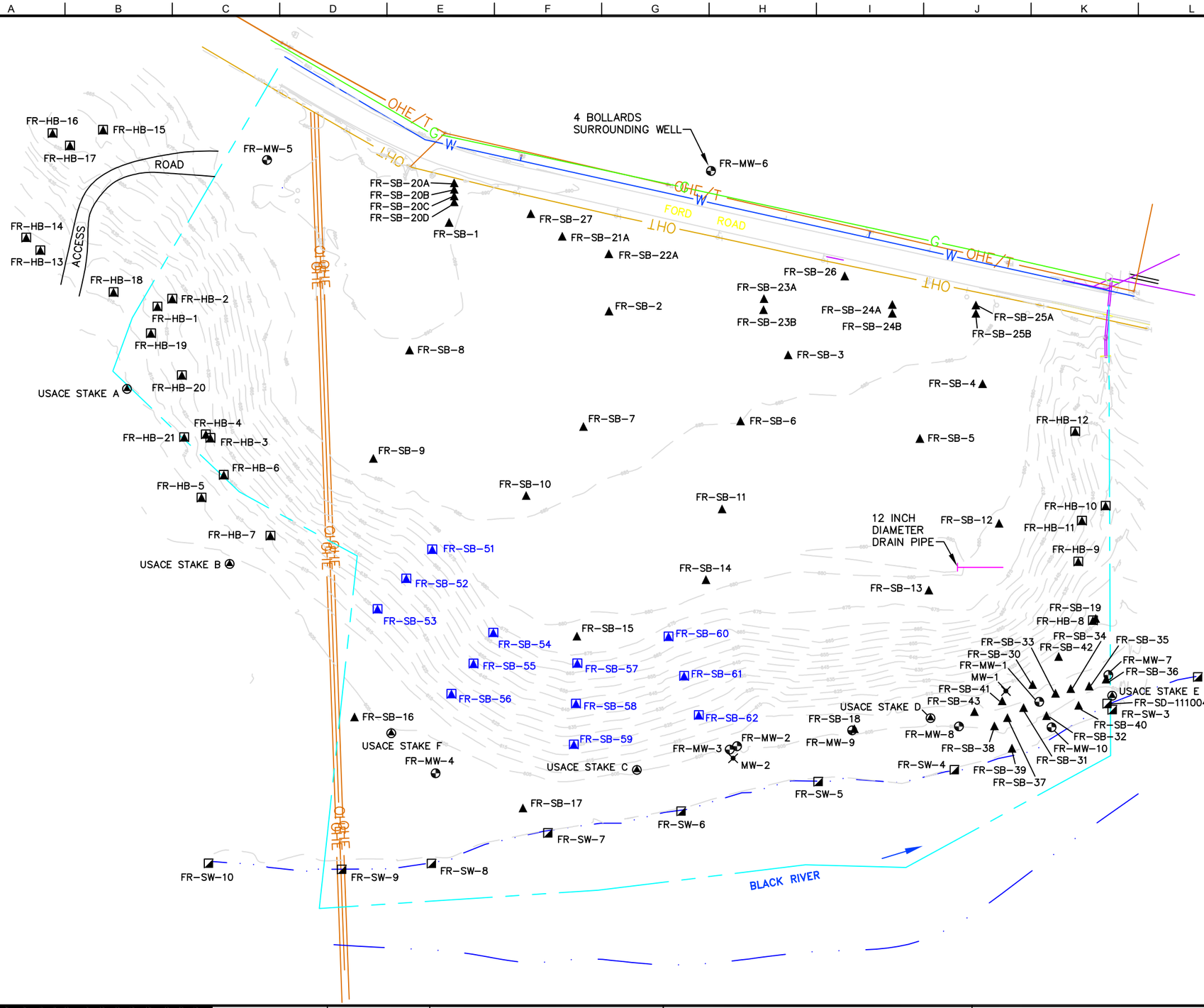

LEGEND:

FR-SB-14 ▲	SOIL BORING
FR-SB-51	PROPOSED HAND AUGERED SOIL BORING
FR-HB-15	HAND BORING
USACE STAKE	POTENTIAL SEEP LOCATION
FR-MW-2	MONITORING WELL
MW-1	ABANDONED WELL
FR-SW-6	SAMPLE LOCATION (APPROXIMATE SURFACE WATER/SEDIMENT)
	PROPERTY LINE
OHE	OVERHEAD POWER LINES
G	GAS LINE
OHE/T	TELEPHONE LINE
W	WATER LINE
ST	STORM MAIN

NOTES:

1. BOUNDARY AND TOPOGRAPHIC SURVEY OF THE SITE WAS PROVIDED BY KS ASSOCIATES ON 1/20/2004.
2. WATER EDGE IS APPROXIMATE OUTSIDE THE SITE PROPERTY LINE.
3. LOCATION OF USACE STAKE 'E' IS APPROXIMATE.

0 120' 240'
GRAPHIC SCALE

BASE MAP TAKEN FROM THE RI/FS REPORT (BBL, 2006)

BROWN AND CALDWELL
COLUMBUS, OHIO

SUBMITTED: _____ DATE: _____
PROJECT MANAGER
APPROVED: _____ DATE: _____
BROWN AND CALDWELL

LINE IS 1 INCH AT FULL SIZE (IF NOT 1" - SCALE ACCORDINGLY)
DESIGNED:
DRAWN:
CHECKED:
CHECKED:
APPROVED:

EXTERNAL REFERENCES

REVISIONS

ZONE	REV.	DESCRIPTION	BY	DATE	APP.

FORD ROAD LANDFILL, ELYRIA OHIO
PROPOSED SIDE SLOPE
SOIL BORING LOCATIONS

FILENAME: SLOPE_SOIL.DWG
BC PROJECT NUMBER: 137355
CLIENT PROJECT NUMBER:
FIGURE NUMBER: 3-3

P:\FORD ROAD\DRAWINGS\CAD\SLOPE_SOIL.DWG July 21, 2009 EMCPEEK
6/22/09

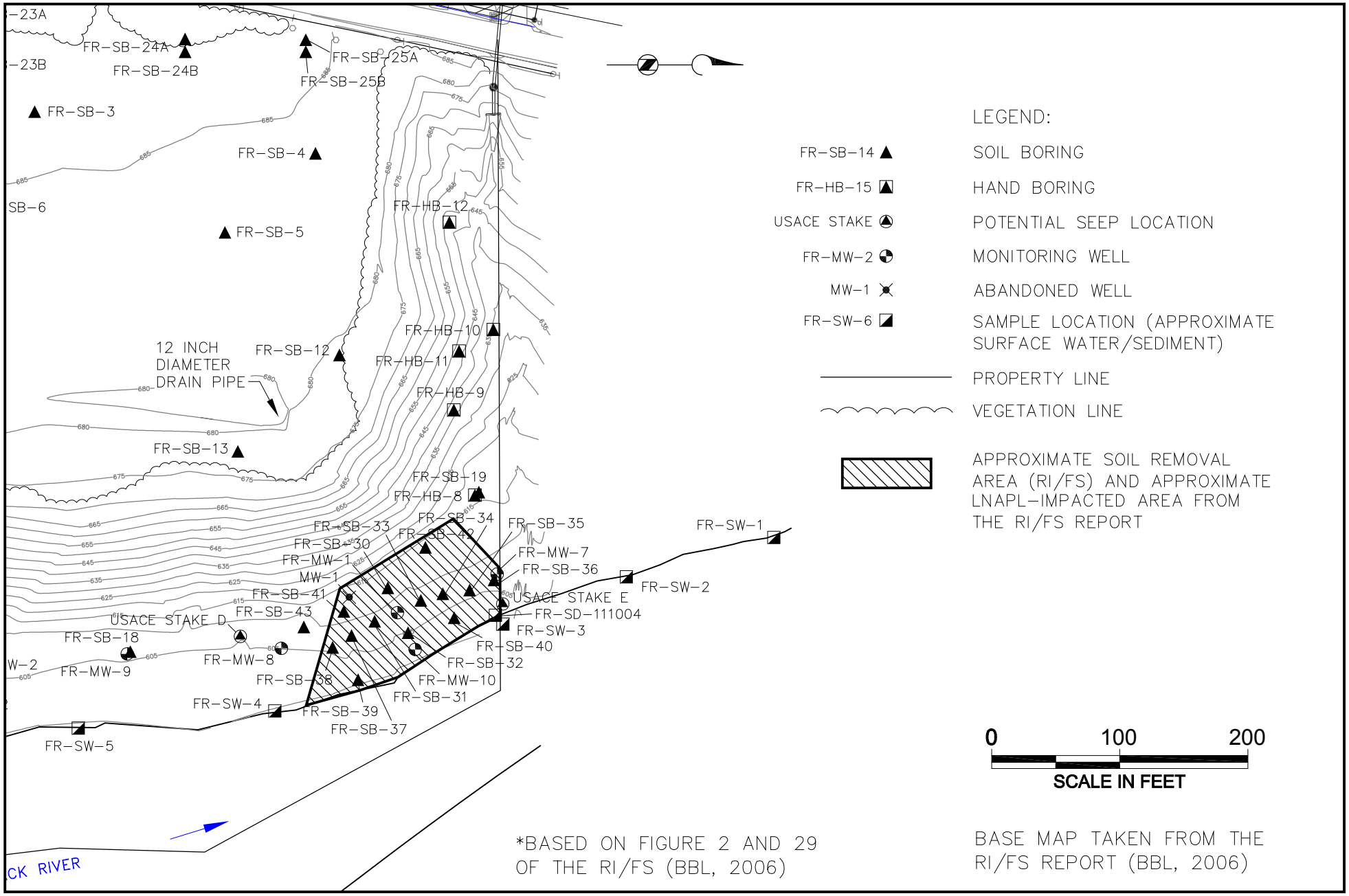

BROWN AND CALDWELL

FIGURE 3-4
APPROXIMATE LIMITS OF LNAPL-IMPACTED AREA

Chain of Custody Record

BROWN AND CALDWELL

☐ **Columbus Office**
4700 Lakehurst Ct, Suite 100
Dublin, Ohio 43016
(614) 410-6144
(614) 410-3088 fax

☐ **Cleveland Office**
7550 Lucerne Dr, Suite 310
Middleburg Heights, Ohio 44130
(440) 826-4900
(440) 826-3400 fax

☐ **Cincinnati Office**
135 Merchant St, Suite 240
Cincinnati, Ohio 45246
(513) 719-6100
(513) 719-6105 fax

COC No: 948

Page _____ of _____

Lab Quote No:

Lab:

Address:

Phone:

Carrier:

Airbill:

Project Name:

Project Location:

Project Number:

Project Manager:

Sampler's Name:

Sampler's Signature:

Field Phone:

1 None
2 HCl
3 H2SO4
4 HNO3
5 NaOH
6 Other

Container Size and Type (P/G)

Preservative Code

Sample Identification	Sample Date	Sample Time	Sample Type	Matrix	Total # of Cont.											Remarks:

Special Instructions/QC Requirements & Comments:

Relinquished by:	Date/Time:	Received by:	Date/Time:
Relinquished by:	Date/Time:	Received by:	Date/Time:
Relinquished by:	Date/Time:	Received by:	Date/Time:

Cooler TEMPERATURE upon arrival at laboratory _____ °C *(To be filled in by LABORATORY upon receipt)*

Distribution: WHITE - Accompanies shipment YELLOW - Returns with report PINK - Sampler's copy

FIGURE 6-1

SAMPLE CHAIN-OF-CUSTODY FORM

Ford Road Landfill
Elyria, Ohio

TABLES

TABLE 5-1

GEOTECHNICAL TESTS AND SAMPLE CONTAINERS

Ford Road Landfill
Elyria, Ohio

Geotechnical Test	ASTM Method	Sample Container	Approximate No. of Samples to be Collected
Moisture Content	D2116	Shelby Tube or 12-ounce Jar	20-30
Grain Size via Sieve/Hydrometer	D422	Shelby Tube	7
Atterberg Limits	D4318	Shelby Tube or 12-ounce Jar	7
Density	D2937	Shelby Tube	7
Consolidated, Undrained Triaxial with Pore Pressure (set of 3)	D4767	Dedicated Shelby Tube	3-4

TABLE 6-1

ANALYTICAL SAMPLE VOLUME AND CONTAINERS
Ford Road Landfill
Elyria, Ohio

Analytical Method	Aqueous Matrix			Aqueous Matrix		
	Sample Container	Preservative	Holding Time	Sample Volume	Preservative	Holding Time
VOCs	2-ounce glass[1]	4° C	14 days	3 X 40-ml glass[2]	HCl to pH<2; 4° C	14 days
SVOCs	4-ounce glass[1]	4° C	14 days	2 X 1-liter amber glass[2]	4° C	7/40 days[3]
Metals	4-ounce glass[1]	4° C	180 days/28 days for Hg	500-ml glass or plastic	HNO_3 to pH<2; 4° C	180 days/28 days for Hg
PCBs	4-ounce glass[1]	4° C	14 days	2 X 1-liter amber glass[2]	4° C	7/40 days[3]

Notes:
1 - Wide-mouth glass jar with PTFE-lined lid.
2 - Glass with Teflon®-lined cap.
3 - 7 days till extraction and 40 days till analysis.

ATTACHMENT A SOPS AND ASTM STANDARDS

STANDARD OPERATING PROCEDURE (SOP) NO. 1

MONITORING WELL INSTALLATION AND DEVELOPMENT

Brown and Caldwell
Standard Operating Procedure

Groundwater Monitoring Well Installation and Development

Revision 1.0
Revision Date: October 31, 2000

Prepared/Revised by:	**Rebecca Frend**	October 31, 2000
	Name	Date
Senior QA Review:	Jay Lucas	10/26/01
	Name	Date
Regional Quality Officer:	Derek Van Winkle	October 26, 2001
	Name	Date

GROUNDWATER MONITORING WELL INSTALLATION

TABLE OF CONTENTS

1.0 OBJECTIVES 1
2.0 SCOPE AND APPLICABILITY 1
2.1 Health and Safety 2
3.0 RESPONSIBILITES 2
4.0 REQUIRED MATERIALS 3
5.0 METHODS 4
5.1 Drilling Methods 4
5.1.1 Hollow Stem Auger Methods 4
5.1.2 Mud Rotary Methods 5
5.1.3 Air Drilling Methods 5
5.1.4 Rotosonic Drilling 6
5.2 Borehole logging 7
5.3 MONITORING WELL CONSTRUCTION PROCEDURES 7
5.3.1 Backfilling. 8
5.3.2 Well Casing and Screen 9
5.3.3 Filter Pack 11
5.3.4 Well Sealing Material 13
5.3.5 Surface Completions 13
5.3.6 Monitoring Well Location and Surveying 14
5.4 Well Development 15
5.5 Disposal And Decontamination 17
6.0 QUALITY ASSURANCE/QUALITY CONTROL 18
7.0 RECORDS 18
8.0 REFERENCES 19
9.0 ATTACHMENTS 19

1.0 OBJECTIVES

The objective of this standard operating procedure (SOP) is to provide the methods to be used for the installation and development of groundwater monitoring wells and to provide standardized reporting formats for documentation of data. This SOP has been specifically designed with the objective of installing and developing wells for environmental investigations.

2.0 SCOPE AND APPLICABILITY

This procedure is intended for use by Brown and Caldwell for the installation, development, and documentation of monitoring wells that will be used for environmental investigations.

Specific monitoring well design and installation procedures depend on project-specific objectives and subsurface conditions and should be discussed in project-specific planning documents. The following aspects will need to be determined when planning a well installation:

- Borehole drilling method
- Construction materials
- Well depth
- Screen length
- Well construction materials
- Location, thickness, and composition of annular seals
- Well completion and protection requirements.

Groundwater monitoring well installation and development will be performed in accordance with applicable well standards for the area of the investigation, this SOP and the project-specific planning documents. Drilling methods employed to pilot the borehole for monitoring well installation will be dependent on the physical nature of

the subsurface materials (unconsolidated materials and/or consolidated materials) at the site. The drilling contractor shall be a licensed water well driller, in accordance with local and state requirements, and a qualified drilling contractor for the installation of groundwater monitoring wells for environmental investigations.

2.1 Health and Safety

Potential physical and chemical hazards will need to be addressed when planning monitoring well installation. A health and safety plan that addresses known and anticipated field conditions must be prepared prior to field work and be followed during well installation.

3.0 RESPONSIBILITES

The project manager is responsible for ensuring that the project involving monitoring well installation is properly planned and executed and that the safety of personnel from chemical and physical hazards associated with drilling and well installation is provided for.

The field geologist or engineer is responsible for directly overseeing the construction and installation of the monitoring wells by the driller and to ensure that the project specific well-installation specifications defined in the project-specific planning documents are followed and that pertinent data are recorded on appropriate forms and in the field notebook. Monitoring well construction and boring completion will be conducted under the supervision of an appropriately qualified and registered person as defined by local regulations.

The site safety officer, typically the field geologist or engineer, is responsible for overseeing the health and safety of Brown and Caldwell employees and for stopping work if necessary to fix unsafe conditions observed in the field. If a subcontracted

firm conducts installation and documentation activities, then the firm will designate a site safety officer.

4.0 REQUIRED MATERIALS

Many materials are required for successfully completing the installation and development of monitoring wells. The drilling Subcontractor often supplies much of the material. However, the field personnel should be aware of what is required to conduct the work so they have their own supplies and can provide complete Subcontractor oversight. The following is a general list of materials that are needed for performing the tasks outlined in this SOP.

Geologist

- Hand lens
- Health and Safety supplies (e.g., steel toed boots, gloves, hard hat, etc.)
- Lithologic Logs and Well completion forms
- Logbook
- Logging assistance tools (e.g., grain size charts, color charts)
- Measuring tapes (both long weighted cloth type and small measuring tape, preferably marked in tenths and hundredths of a foot)

Drilling Subcontractor

- Drilling equipment (depends upon the type of drilling, e.g., drill stem, auger, generators, compressors, steam cleaners, etc.)
- Well drilling supplies (drilling mud,
- Decontamination Pad construction supplies
- Well construction supplies (screen, well casing, sand pack, bentonite chips, bentonite, cement mixture, water).

- Health and safety records required for working on site
- Driver's licenses
- Ancillary support vehicles
- General tools

5.0 METHODS

The borehole diameter must be a minimum of four (4) inches greater than the outside diameter of the well screen or riser pipe used to construct the well. This is necessary so that sufficient annular space is available to install filter packs and grout seals. All boreholes will be cleared for shallow obstructions by following the SOP for Utility Clearance.

5.1 Drilling Methods

Several drilling methods are available for use in creating a borehole for well installation. These methods include hollow stem, air rotary, mud rotary, and cable tool, among others. The drilling method selected will be based on the physical properties of the subsurface materials.

5.1.1 Hollow Stem Auger Methods

Hollow stem auger uses continuous flight hollow stem auger with a bit on the bottom to drill and maintain an open borehole. The continuous flight auger drives the drill cuttings to the surface as drilling progresses. The walls of the auger minimize the amount of unconsolidated materials entering into the space inside the casing. Intact soil samples are collected by pounding a sampler ahead of the auger. The well casing, filter pack and seal are installed inside the auger. The auger is removed slightly ahead of backfilling as filter pack and grout are added. Careful recording of the amount of each material used should be recorded in the field logbook.

5.1.2 Mud Rotary Methods

Mud rotary drilling uses drilling fluids to circulate drill cuttings to the surface. Drilling fluid will consist of only uncontaminated air, water or uncontaminated water mixed with bentonite. Powdered bentonite or an approved equivalent will be used as an additive in the drilling fluid. Bentonite will be mixed into the drilling fluid using a mud mixer and a portable mud tank. Drilling fluid density and viscosity will be maintained at appropriate levels for the various lithology encountered and in accordance with material specifications.

A shale-shaker and de-sanding system will be used to maintain the density and viscosity of the drilling fluid. Sand content will be minimized to the degree possible by maintaining no greater than 4 percent sand by mud volume.

If water or other drilling fluids have been introduced into the borehole during drilling or well installation, samples of these fluids should be obtained and analyzed for chemical constituents that may be of interest at the site. In addition, an attempt should be made to recover the quantity of fluid or water introduced by flushing the borehole before well installation and/or by pumping the well during development.

5.1.3 Air Drilling Methods

The following are descriptions of air rotary, “down-the-hole”, and dual-wall reverse circulation air rotary methods. Air rotary uses air as a primary means of transporting drill cuttings to the surface. A large compressor provides filtered air that is piped to the swivel hose connected to the top of the Kelly bushing or drill pipe. The air, forced down the drill pipe, escapes through small ports at the bottom of the drill bit, thereby lifting the cuttings and cooling the bit. The cuttings are blown out the top of the hole and are collected at the surface in a cyclone unit and a

two- to four-yard roll-off container. Injection of a small volume of clean water into the air system controls dust and lowers the temperature of the air so that the swivel is cooled. Air drilling is effective in semi-consolidated or consolidated materials.

A second direct rotary method using air is called the "down-the-hole" or percussion down hole hammer drilling system. A pneumatic drill operated at the end of the drill pipe rapidly strikes the rock while the drill pipe is slowly rotated. The percussive effect is similar to the blows delivered by a cable tool bit. Cuttings are removed continuously by the air used to drive the hammer.

A third direct air rotary method is called the Air Rotary Casing Hammer (ARCH) method is used where an outer steel casing is advanced slightly behind the drill bit. The drill bit reams material in front of the casing and then the casing is advanced with a pneumatic hammer down the hole to prevent hole collapse. Cuttings are collected in a tube system that conveys them into a cyclone at the surface.

Dual-wall reverse circulation air rotary method uses flush-jointed, double wall pipe in which the air moves by reverse circulation. The airflow is contained between the two walls of the dual-wall pipe and only contacts the walls of the borehole near the bit. Dual-wall pipe can be driven into place in loosely consolidated materials by a pile hammer as a drive bit is cutting the formation. Downhole air hammers and tricone bits can also be used to cut the formation. The air lifts the cuttings to the surface through the inner pipe. Dual-wall methods can be applied in consolidated and unconsolidated formations.

5.1.4 Rotosonic Drilling

This section to be added as needed later.

5.2 Borehole logging

Boreholes will be logged using cuttings and samples collected during drilling activities. Soil or rock samples will be collected as described in the SOP for Soil Sampling. Cuttings and soil and rock samples will be described at the frequency presented in the project-specific planning documents following the procedures outlined in SOP for Field Classification and Description of Soil and Rock.

After drilling has been completed, the field geologist/engineer will measure the total open depth of the borehole with a weighted, calibrated tape measure and document the depth. The field geologist will then collaborate with the supervising geologist by reviewing lithologic units encountered, water levels, if any, and other logged information to determine the well construction details.

Boreholes/well locations should be clearly designated in the field notes using notes and a hand sketched layout and should include the following information:

- Measurements of each boring/sample point relative to fixed objects (building, structures, etc),
- Boring/sample location with their identification number noted,
- North arrow or other compass directional indicator, and
- Other essential site features and/or investigation features (underground storage tanks, piping, above ground tanks, etc.).

5.3 MONITORING WELL CONSTRUCTION PROCEDURES

Monitoring wells will be constructed in accordance with state and local agency requirements, and will include at a minimum the following materials:

- Borehole backfill for overdrilled boreholes prior to well installation,
- Well casing and screen

- Filter pack materials
- Well sealing materials (e.g., bentonite pellets, cement, powdered bentonite), and
- Surface seals and materials for well surface completion (e.g., concrete, protective steel casing, steel posts, surface boxes).

A discussion of these materials and how they are used is provided in more detail in the following sections.

5.3.1 Backfilling.

If backfilling the borehole to the appropriate well installation depth is necessary, neat cement, bentonite grout, bentonite pellets or filter pack sand may be used. The backfill material selected for use will depend on site conditions, lithology, and project-specific requirements. Most often the borehole requires complete sealing with lower layers, so neat cement, bentonite grout, or bentonite pellets are used. The setup time should be a minimum of 48 hours for neat cement and 24 hours for bentonite grout and bentonite pellets prior to beginning well construction. Field personnel should remeasure and verify that the bottom of the bore hole is exactly where it should be set before proceeding with well construction. The necessary setup times may be reduced if manufacturer- approved additives are mixed with the grout to accelerate the cure time.

If neat cement or bentonite grout is used, a tremie pipe will be required to place the grout in the bottom of the hole. Grouting the borehole may be difficult to accomplish, if the portion of the borehole to be grouted is significantly lower than the groundwater level. Provisions will be necessary to support the screen and riser pipe to prevent them from sinking into the grout. Care will be taken to frequently measure the total borehole depth when adding grout to the bottom of the hole.

Grout should have thickened to a hardened state before proceeding. The thickness of the grout will be calculated based on depth readings and recorded. If a well has been backfilled too much it may require reaming to clear out the overfilled material.

Depending upon the lithology some distance should be planned between the fill in a borehole and the bottom of the screened interval. Unless this distance would result in a breach confining layer, or the well screen requires setting directly on the impermeable zone due to site requirements, the bottom of the well screen should be set at a maximum of 6 inches above the top of any backfill. The distance between the top of fill and the bottom of the well screen should be filled with a fine sand buffer.

Bentonite pellets should be carefully dropped into the borehole to minimize the risk of pellets sticking to the side of the borehole when dropped through a water column. Pellets are generally easier to place than bentonite chips because pellets do not hydrate as quickly, hence pellets are the preferred method for small backfill jobs where significant confining zones have not been breached.

5.3.2 Well Casing and Screen

The monitoring well will consist of factory-sealed commercially available well screen and casing. Well screens and casing will typically be constructed of polyvinyl chloride (PVC), a type of plastic, but may also be constructed of stainless steel or Teflon depending on subsurface conditions or other project requirements. Stainless steel casing shall meet one of the following standards: American Society For Testing Materials (ASTM) A-53-93A or B, A-589-93, or American Petroleum Institute 5L, March 1982 Edition to conform to the minimum standards given in Table A of that document.

Plastic casing and liners shall meet the requirements of ASTM Standard F480-94 and the National Sanitation Foundation (NSF) International Standard Number 14-1990, Plastic Piping System Components and Related Materials. Evidence of compliance shall be included in the current NSF listing and display of the NSF seal on each section of casing, and marking the casing in accordance with the requirements of ASTM Standard F-480-94. Plastic well casing and liners must be Standard Dimension Ratio (SDR)-rated and conform to the minimum requirements given in Table B of the above-referenced document.

Well screens shall be constructed of non-corrosive and non-reactive material. Well screens shall be permanently joined to the well casing and shall be centered in the borehole. The anticipated length of screen and the reasoning behind choosing the length of screen will be determined when developing the project-specific planning documents. Modification can be made in the field, but will be done in consultation with the PM, or their designee such as the Project Technical Manager or Responsible Geologist.

Screen slot type and size will be dependent on the sand pack material and the aquifer formation material. Casing will be connected by flush-threaded or coupled joints and will be completed with a bottom cap. A collection sump may be installed below the screen and will vary in length depending on lithology and project needs. The collection sump and bottom cap will be connected to the well screen by flush threaded or coupled joints. Plastic casing must have threaded joints and O-ring seals. Solvent, glue, or anti-seize compounds will not be used on the joints. With deep wells (greater than approximately 100 feet below grade), centralizers should be used to keep the well casing plume and straight in the borehole. Centralizers should be placed at approximately 20 foot intervals in the screen interval and 40 foot intervals throughout the blank casing interval.

For water table wells, well screens should be placed such that some of the screened interval is above the water table, and some section is below the water table. This allows for seasonal fluctations. The amount of split should be determined by the lead responsible geologist and be based upon local conditions.

Casing and screen (well string) must be clean, free of rust, grease, oil or contaminants and be composed of materials that will not affect the quality of the water sample. All casing shall be watertight. The casing shall be centered in the borehole, be free of any obstructions and allow sampling devices to be lowered into the well. The well string shall be hung in the borehole during installation so that the well is sufficiently plumbed and straight after completion.

5.3.3 Filter Pack

Monitoring wells installed in unconsolidated material will be constructed with filter packs. When used, the filter pack will be the only material in contact with the well screen. The filter pack will consist of sand or gravel. The sand or gravel used for filter pack material shall be sized to match the screen slot size and the surrounding lithology to prevent subsurface materials from penetrating through the sand or filter pack, and preventing the sand or filter pack from entering the well. Sizing of the filter pack material is often conducted using sieve analysis and following interpretative procedures outlined in Driscoll (1986). The sand or gravel shall be free of clay, dust, and organic material. Crushed limestone, dolomite, or any material containing clay or any other material that will adversely affect the performance of the monitoring well shall not be used as filter pack. The filter pack will extend a maximum of six (6) inches below the bottom of the screen to two (2) to three (3) feet above the top of screen. The filter pack material may be placed in the well by pouring the sand into the open borehole, or tremied into place depending upon site-specific criteria. However, in all cases, filter pack material should be

added carefully with continuous measurements by the field geologist to prevent bridging of the filter pack material.

Groundwater wells completed into competent bedrock material are often not completed with filter pack material, and can be completed as an open hole over the screened interval. Completion in this manner should be carefully considered and approved by regulatory agencies prior to field mobilization.

The well will be gently bailed and surged with a bailer and surge block after the filter pack has been added to the borehole and before the seal is placed in the annular space. A surge block consists of a rubber or leather and metal plunger attached to a rod or pipe of sufficient length to reach the bottom of the screen. Surging should be maintained for at least five minutes and the entire length of saturated screen will be surged to help settle the filter pack. The top of the filter pack will need to be gauged after surging and additional filter pack material may need to be added if settling has occurred.

Sometimes project specific requirements may identify that a transition sand be emplaced above the main filter pack. This transition sand is usually much smaller grain size than the filter pack, and is emplaced to provide added protection that grout invasion into the filter pack will not occur when deep wells (greater than 200 feet deep) are installed. Transition sands can be emplaced up to 10 or 20 feet above the regular sand pack interval. An alternative to transition sands is to use additional well seal material such as bentonite pellets.

5.3.4 Well Sealing Material

The wells will have an annular space seal that extends from the top of the filter pack to the surface. The annular sealing material above the filter pack will prevent the migration of fluids from the surface and between aquifers. Sealing material will be chemically compatible with anticipated contaminants. Hydrated bentonite chips or pellets are typically used as an annular seal directly above the filter pack. The annular seal should be a minimum of 3 feet thick unless site-specific requirements dictate otherwise. For example, as mentioned above, deep wells may require additional sealant material (10 to 20 feet thick versus 3 feet) between the sand pack and cement ground annular fill above to prevent grout invasion into the filter pack interval. Cement and/or bentonite grout are typically used as annular fill above the seal. Above the sealant material a bentonite grout mixture is often used as an annular fill to complete the well installation to within 2 feet of the surface. Grouting emplacement will occur using a tremie pipe so that the grout fills the annular space from the bottom to the surface without allowing air pockets to form in the filled zone.

5.3.5 Surface Completions

Above Grade or Monument Surface Well Head Completion

With above-grade well completions, the well casing will extend to 1 to 2 feet above the ground surface. A locking cap will be placed at the top of the casing and the cap will be watertight. The section of casing that sticks up above ground will be protected by a steel protective pipe, set at least 2-feet deep into a concrete surface seal. A concrete pad should be constructed around the protective steel pipe. The pad should be square, approximately 1.5-by-1.5 to 2-by 2-feet, sloped slightly away from the well, and the top of the pad should be approximately 4-inches off the ground. Specific client needs may differ from this construction, and such requirements

should be outlined in project specific planning documents. The top of the protective pipe will have a vented lockable cap. Protective steel posts will be installed in areas where the well could be struck by vehicles or heavy equipment. In addition, a "weep" hole should be drilled in the bottom of the protective steel pipe. In areas where freezing may occur, placement of the weep hole is critical; little volume should exist in the protective casing above the weep hole where water could accumulate and freeze thereby damaging the well. A "V" notch or other permanent mark will be placed at the north edge of the top of the well casing that will be used as the reference point for well elevation surveying and water level monitoring.

Ground or Grade Surface Well Head Completion

Monitoring well casing may terminate at the ground surface with a flush mounted traffic-rated road box. Road box installations must use a watertight well cap for the well riser pipe in addition to a watertight road box to prevent surface water from entering the well. The well casing should extend approximately 3 inches above the sealant in the bottom of the well box. The traffic-rated road box and surface concrete completion should meet Class A specifications, which meet a minimum 4000-pound compressive strength. The surface completion should provide positive drainage away from the well box to prevent ponding around the well. In traffic areas and sidewalks, this positive drainage slope away from the box should be minimized to prevent physical hazards. The surface seal around the box should be a minimum of 12 inches around the perimeter of the box. As discussed above a reference mark should be placed on the top of the well casing for well elevation surveying and water level monitoring.

5.3.6 Monitoring Well Location and Surveying

Monitoring wells will be located by parcel coordinates required by local permit requirements. Each well will be surveyed by a licensed surveyor in the state where

the well has been installed and tied to an established state or county benchmark, site conditions permitting. The vertical survey will be accurate to 0.01 foot relative to mean sea level. Both the top of casing and ground surface elevation near the well will be surveyed for vertical control. The "V" notch cut on the north side of each well casing will be used as the surveyor's reference mark. For horizontal control, each well will be tied to an existing site coordinate system and will be surveyed to a horizontal accuracy of 0.1 foot.

5.4 Well Development

Monitoring well development is necessary to ensure that complete hydraulic connection is made and maintained between the well and the aquifer material surrounding the well screen and filter pack. The appropriate development method will be selected for each project on the basis of the circumstances, objectives, and requirements of that project.

The appropriate development method will be selected for each project based on the lithology, objectives, and requirements of that project. Project-specific planning documents will identify the specific development method to be used. In general, most wells will be developed by using surge block and bailing methods to draw the coarse and/or fine material out of the sand pack. Other development methods that may be used include jetting, airlift, and submersible pump methods. These methods are discussed further below. Jetting is typically not used as a development method for environmental investigations, but is commonly used for water resource monitoring wells or production wells.

Well development should begin no sooner than 48 hours after well installation. However, if drilling muds are used during well installation, well development should occur approximately 24 hours following well installation so that the drilling mud does not set up in the well screen section.

Generally a phased process is used to develop wells, starting with a gentle bailing phase to remove sand, followed by a surging phase, then a pumping phase after the well begins to clear up. The following paragraphs provide more detailed information.

After a well is first installed, and in fact, often before the bentonite pellet seal is set, gentle bailing is used to remove water and sand from the well. The purpose of this technique is used to settle the sand pack. After further well sealant materials have been added and allowed to set for approximately 48 hours, bailing is resumed as part of well development. The purpose of bailing is to remove an fine material that may have accumulated in the well, and start pulling in natural material into the sand pack. Bailing is often conducted until the sand content in the removed water begins to decrease.

After the sand content begins to decrease, surging is conducted. A surge block is used to move sediments from the filter pack into the well casing. A surge block consists of a rubber (or leather) and metal plunger attached to a rod or pipe of sufficient length to reach the bottom of the well. All surge blocks will be constructed of materials that will not introduce contamination into the well. Surge blocks should have some manner of allowing pressure release to prevent casing collapse. The surge block is moved up and down the well screen interval and then removed, followed by a return to bailing to remove any sand brought into the well by the surging action. Care should be taken to not surge too strongly with subsequent casing deformation or collapse; the well screen interval is often the weakest part of a well. Surging should be followed by additional bailing to remove fine materials that may have entered the well during the surging effort.

After surging has been completed and the sand content of the bailed water has decreased, a submersible pump is used to continue well development. The pump

should be moved up and down the well screen interval until the obtained water is relatively clear. Well development will continue until the water in the well clarifies and monitoring parameters such as pH, specific conductivity, and temperature stabilize as defined in the project-specific planning documents. It should be noted that where very fine-grained formations are opposite the screened interval, continued well development until clear water is obtained might be impossible. Decisions regarding when to cease development where silty conditions exist should be made between the field supervisor and PM.

During well development pH, specific conductivity, temperature, and turbidity should be monitored frequently to establish natural conditions and evaluate whether the well has been completely developed. The main criteria for well development is clear water (Nephelometric turbidity units or NTU of less than 5). As mentioned above, clear water can often be impossible to obtain with environmental monitoring wells. A further criteria for completed well development is that the other water quality parameters mentioned above stabilize to within 10 percent between readings over one well volume.

The minimum volume of water purged from the well during development will be approximately a minimum of 3 borehole volumes (wells will typically not reach stabilization of water quality parameters before this condition is achieved and may not have reached stability even after this threshold has been achieved). The above is a general guideline for difficult well development - project-specific planning documents should address project constraints on well development. Development water will be stored in 55-gallon Department of Transportation (DOT) -approved drums and/or baker tanks depending upon the total volume of purge water removed from the newly installed wells.

5.5 Disposal And Decontamination

All drill cuttings and fluids generated during well installation and development will be containerized pending analytical results and determination of disposal options as outlined in the Investigation-Derived Waste Handling SOP unless project-specific requirements unless specify otherwise. Waste containment and disposal will occur in a manner that will not result in contamination of the immediate area or result in a hazard to individuals who may come in contact with these materials.

All drilling and well construction equipment that comes into contact with the borehole will be decontaminated by following the Equipment Decontamination SOP.

6.0 QUALITY ASSURANCE/QUALITY CONTROL

Borehole drilling and well construction details will be documented in detail in the field. Field documentation forms will consist of a lithologic borehole log, a well construction log, and daily field note forms. Examples of these forms are included in Attachment A. Deviations from project-specific planning documents will be documented and explained in daily field notes. The program manager will be contacted to discuss project deviations.

Field quality control can be maintained through 1) making sure employees are properly trained to conduct the work being implemented, and 2) performing routine field audits to evaluate how well employees are following procedures. These two aspects of QA/QC are detailed in the Quality Assurance Program documentation.

7.0 RECORDS

Field notes and logs will be submitted to the Project Manager or designate immediately following the field event for checking and revision purposes. The Project Manager or designate shall review and transmit the completed forms for incorporation into the project file.

8.0 REFERENCES

California Department of Water Resources, 1981, State of California Water Well Standards, Bulletin 74-81.

California Department of Water Resources, 1990, State of California Water Well Standards (modified), Bulletin 74-90.

Driscoll, F.G., 1986, Groundwater and Wells, Second Edition, Johnson Filtration Systems, Inc., St. Paul, MN.

United States Environmental Protection Agency, 1989, Handbook for Suggested Practices for the Design and Installation of Monitoring Wells, EPA 600/4-89/034, Reprinted by the National Ground Water Association.

9.0 ATTACHMENTS

Attachment A – Well Construction and Lithologic Log Form

ATTACHMENT A

WELL CONSTRUCTION AND LITHOLOGIC LOG FORM

ATTACHMENT A
EXAMPLE WELL COMPLETION FORM

BROWN AND CALDWELL

BOREHOLE/WELL LOG

LOCATION OF BORING

N W E S

SCALE:

CLIENT

LOCATION

PROJECT NAME

JOB NUMBER

DRILLING CONTRACTOR

RIG TYPE (CIRCLE ONE) OTHER _____

HSA DP MUD ARCH NONE

DRILLING METHOD, FLUID USED

SOIL SAMPLING METHOD (CIRCLE ONE) OTHER _____

SPLIT SPOON CC ACETATE NONE

MONITORING INSTRUMENT (CIRCLE ONE) OTHER _____

PID FID LEL RAD NONE

SURFACE CONDITIONS (CIRCLE ONE) OTHER _____

ASPHALT CONCRETE DIRT DRY WET

BORING NUMBER

SHEET OF

DRILLING	
START	FINISH
TIME	TIME
DATE	DATE

WELL CONSTRUCTION	
START	FINISH
TIME	TIME
DATE	DATE

WELL CONSTRUCTION		SOIL SAMPLING					WATER LEVEL (INTIAL/STATIC)	DEPTH (FEET)	INSTRUMENT READING (ppm)	USCS GROUP SYMBOL	FINE GRAINED AND ORGANIC SOIL DESCRIPTION: GROUP NAME, MUNSELL COLOR, COLOR, SIZE DISTRIBUTION, PLASTICITY, DRY STRENGTH, DILATANCY, TOUGHNESS, MOISTURE, ODOR, STRUCTURE, CONSISTENCY, RELATIVE PERMEABILITY, LOCAL GEOLOGIC NAME, CONTACT DESCRIPTION COARSE GRAINED SOIL DESCRIPTION: GROUP NAME, MUNSELL COLOR, COLOR, GRADATION (g/s/f), SIZE DISTRIBUTION, PLASTICITY, SHAPE, ANGULARITY, MOISTURE, ODOR, STRUCTURE, CEMENTATION, RELATIVE PERMEABILITY, LOCAL GEOLOGIC NAME, MINERALOGY, CONTACT DESCRIPTION
ANNULUS	CASING	SAMPLER USED	BLOWS/6" INTERVAL	INTERVAL SAMPLED	RECOVERY	ANALYTICAL SAMPLE (A,B,C)					SAMPLE TYPE: INTERVAL: DESCRIPTION
								0			
								5			
								0			
								5			
								0			

ANALYTICAL SAMPLE ID (SEE ABOVE FOR LOCATION)

A _____ D _____

B _____ E _____

C F

STANDARD OPERATING PROCEDURE (SOP)
NO. 2

MONITORING WELL SAMPLING

Brown and Caldwell
Standard Operating Procedure

Groundwater Sample Collection

Revision 1.1
Revision Date: October 9, 2001

Prepared/Revised by:	**Wendy Linck**	October 9, 2001
	Name	Date
Senior QA Review:	Fay Lucas	10/26/01
	Name	Date
Regional Quality Officer:	Donald Van Winkle	October 26, 2001
	Name	Date

GROUNDWATER SAMPLE COLLECTION

TABLE OF CONTENTS

TABLE OF CONTENTS i
1.0 OBJECTIVES 1
2.0 SCOPE AND APPLICABILITY 1
3.0 REQUIRED MATERIALS 1
4.0 RESPONSIBILITIES 2
5.0 METHODS 3
5.1 General Considerations 3
5.1.1 Equipment Decontamination 4
5.1.2 Dedicated and Disposable Equipment 4
5.1.3 Sequence of Sampling 5
5.1.4 Field QA/QC Samples 5
5.2 PURGING AND SAMPLING PROCEDURES 6
5.2.1 Planning 6
5.2.2 Preparatory Office Activities 9
5.2.3 Preparatory Field Activities 10
5.2.4 Well Purging 13
5.2.5 Groundwater Sampling 16
5.2.6 Equipment Instructions 17
5.2.7 Field Measurements 37
5.3 FIELD RECORDS 38
5.4 SAMPLE SHIPMENT 39
5.5 SPECIAL REGULATORY REQUIREMENTS 39
6.0 REFERENCES 39
7.0 ATTACHMENTS 42

1.0 OBJECTIVES

The primary objective of this standard operating procedure (SOP) is to establish a uniform method for the collection of representative groundwater samples from monitoring wells, and to reduce the potential variability associated with purging and sampling.

2.0 SCOPE AND APPLICABILITY

This SOP will be used to support groundwater monitoring programs and conducting the field groundwater sampling activities. Groundwater sampling involves two primary operations, purging stagnant water from a well followed by the collection of a sample from the same well. Groundwater sampling variables can be significantly controlled through the appropriate selection and use of purging and sampling equipment, and through the use of procedures that are described in this SOP.

3.0 REQUIRED MATERIALS

Materials required for conducting groundwater sampling are variable depending upon the method chosen to conduct the sampling. Therefore the listing of materials will be separated into two parts in this SOP. This section will present materials that are general in applicability – things that should be included regardless of purge or sampling method. In Section 5, where specific methods and approaches are discussed, additional materials will be listed. General materials that should be considered regardless of method are as follows:

- Health and safety records
- Personal protection equipment (as required by the Site Safety Plan)
- Health and safety monitoring equipment (e.g., PID)

- Well Completion Forms and Data from previous sampling efforts (if available)
- Water level indicator
- Decontamination supplies (5 gallon buckets, decontamination fluids, squirt bottles)
- Water quality monitoring equipment
- Purge pumps and control boxes
- Generator
- Twine
- Permanent marking pens
- Notebook
- Calculator
- Measuring tape
- IDW containers and labels
- Garbage bags
- Drinking water
- Phone, Camera
- Shipping labels and Chain of Custody records
- Coolers
- Ice
- Filters (0.45 μm), if appropriate
- Tubing

Checklists are included in the Readiness Review SOP for help in gathering and monitoring the equipment necessary to conduct groundwater purging and sampling

4.0 RESPONSIBILITIES

The Project Manager, or designee, will have the responsibility to oversee and ensure that groundwater purging and sampling procedures are implemented in accordance this SOP and any project- or site-specific planning documents.

The field personnel will be responsible for the understanding and implementation of this SOP during groundwater sampling activities, as well as, obtaining the appropriate field logbooks, forms and records necessary to complete the field activities.

5.0 METHODS

5.1 General Considerations

Groundwater sampling involves two primary operations. These include the purging of stagnant water from the well followed by the collection of a sample. Groundwater sampling variables can be significantly controlled through the appropriate selection and use of purging and sampling equipment, and through the use of procedures that are described below.

Good communication is essential to the ultimate success of a groundwater sampling project. This includes communication within the project team, as well as communication with the client and analytical laboratory, when establishing project objectives.

Good communication with the project team, laboratory, client, and, if appropriate, regulatory agencies, includes complete project specific planning documents such as field sampling plans, quality assurance plans, and scope of work documents for subcontracted laboratories. Plans should include detailed information with respect to site-specific requirements, with reference to SOPs wherever possible, and risk criteria that will be used to assess the data. The quality assurance plan and laboratory scope of work (of which the quality assurance plan can be part) should contain detailed information regarding what is expected from the laboratory regarding the methods to be used, quality assurance measures and calibrating corrective measures, and deliverables (especially electronic deliverable formats). A

detailed quality assurance plan is even more important in light of EPA's Performances Based Measurement Standard (PBMS) initiative.

In addition to good communication, the project plans should consider equipment decontamination, sampling equipment, sampling sequence, and field quality assurance/quality control (QA/QC) samples. These are described in the following sections.

5.1.1 Equipment Decontamination

Equipment that will be in contact with the sample must be decontaminated prior to each use. This is necessary to minimize inadvertent contamination of the sample. Specific methods for equipment cleaning are dependent upon a number of factors including the sample media, analytical parameters, the purpose of the investigation, the equipment to be cleaned, and the specific regulatory guidelines that may apply.

Equipment decontamination procedures are described in the Equipment Decontamination SOP. Any site specific decontamination procedures can be specified in the field sampling plan for each project.

5.1.2 Dedicated and Disposable Equipment

Use of dedicated and new, disposable purging and sampling equipment are preferable to decontamination of reusable sampling equipment. Dedicated equipment, and use of new, disposable equipment, can virtually eliminate cross-contamination between samples caused by incomplete decontamination. Dedicated equipment can also increase sampling efficiency through the elimination of the need to decontaminate equipment for successive sampling. Furthermore, dedicated equipment can also help to reduce the physical handling of the equipment that can cause sample contamination through contact with potentially contaminated

surfaces. New, disposable equipment may need to be decontaminated before use. Review project-specific planning documents regarding decontamination of disposable equipment.

5.1.3 Sequence of Sampling

The groundwater sampling operation should always be conducted in a sequence that proceeds from wells containing the lowest concentrations to wells containing the highest concentrations. Sampling in this order will further minimize the likelihood of sample cross-contamination that can be caused through improper handling or equipment cleaning. This type of sampling sequence should be used even for programs in which equipment is dedicated to minimize the cross-contamination that could result from exposure to contaminated garments or other equipment. If water quality is not known, the wells upgradient of a suspected source area should be sampled first, followed by the wells furthest away and cross-gradient or downgradient.

Sampling sequence also applies to the order that different analytes are collected. Typically these analytes that are volatile are collected first, followed by those that are sensitive to oxidation.

5.1.4 Field QA/QC Samples

Additional samples should be collected for the specific purpose of documenting the Quality Assurance/Quality Control (QA/QC) of the field sampling procedures. Field QA/QC samples provide technically and legally defensible data regarding the reproducibility and overall quality of the groundwater sample. Descriptions of the type and frequency of QA/QC sampling should be specified in the project-specific planning documents. Field QA/QC samples include field blanks, equipment blanks, trip blanks, and blind duplicates. These samples are collected in addition to the

laboratory QA/QC samples which may include method blanks, matrix spikes and matrix spike duplicate samples.

5.2 PURGING AND SAMPLING PROCEDURES

This section provides a description of the procedures to be used for groundwater sampling. These procedures include planning, preparatory office activities, preparatory field activities, well purging, well sampling, and post sampling activities. These activities are listed on Attachment A and are described in detail in the following sections. Many of these steps have record keeping components which are discussed in detail in Section 5.4.

5.2.1 Planning

The planning phase should include the selection of specific field methods, including the well purging strategy and planning for the proper disposal of the purge water. The sampling program should be discussed in project-specific planning documents.

Good communication with the analytical laboratory is essential to the success of a groundwater sampling project. The analytical requirements must be well defined and clearly communicated, prior to conducting the field work. Written communication is encouraged, in particular to document requirements for specific analytical methods, low detection limits, and other special needs. Written communication should include a detailed scope of work that includes the quality assurance plan for the project. These plans should specifically identify detection limits, with particular emphasis placed on how these limits relate to regulatory criteria or risk based criteria that have been developed for the project.

<u>Purging and Sampling Equipment Selection</u>

Some of the factors that should be considered in the selection of purging and sampling devices include:

- Well yield
- Depth to water
- Well diameter and depth
- Required material of construction
- Analytical parameters
- Regulatory requirements
- Cost

Attachment B presents a summary of purging equipment. Attachment C summarizes well sampling equipment. Attachment D presents a matrix indicating suitability of sampling and purging equipment for specific applications.

Purging Strategies

The strategy that will be employed for well purging should be determined prior to sampling and presented in project-specific planning documents. Several different strategies are commonly used in order to assess the completeness of well purging. The most common purging strategies are listed below.

- Purging is continued until stabilization of certain indicator parameters is observed in successive measurements over a specified time or volume. The most commonly used indicator parameters include pH, specific conductivity, turbidity, temperature, oxidation/reduction potential (ORP), and dissolved oxygen (DO).
- Purging 3 to 5 well volumes of water from the well.

- Purging low yield wells until the water level reaches the top of the well screen, and then allowing the well to partially recover. After partial recovery, the well is re-purged to the top of the well screen and allowing the well to partially recover a second time. It is recognized, however, that it may not be possible to avoid dewatering the well screen in many shallow wells.
- Very low yield wells are purged until dryness and allowing the well to partially recover (often 12 to 24 hours).
- Low or no-flow purging strategies. Generally, well is pumped at rates (<0.5 gallons per minute) that do not induce drawdown and ostensibly mirror flow rates in the aquifer. These are gaining acceptance in many areas because such techniques reduce generated wastes. Often regulatory agencies will require a comparison study before acceptance but these can be valuable when long term monitoring programs will be implemented.

Implementation of these strategies is discussed in more detail in Section 5.2.

Purge Water Disposal

The methods and responsibility for collection, containerization, treatment and disposal of purge water should be determined prior to initiation of any sampling project. Much of how to handle purge water is discussed in the SOP for Investigation Derived Waste. However, additional considerations for groundwater purging and sampling are included below.

Collection and contamination is often accomplished through use of 55 gallon drums, mobile storage tanks, or through use of vacuum trucks which can directly transport off site to a treatment facility or to larger storage tanks on site. If specifically allowed by the responsible agency, purge water may be reapplied to the ground surface. Treatment of purge water may be accomplished on site at facilities that

have wastewater treatment plants, or by using a mobile treatment unit. Responsibility for off-site disposal of containerized purge water must be determined prior to conducting the work.

5.2.2 Preparatory Office Activities

Equipment and containers should be organized in the office prior to embarking on a field sampling project to the extent practicable. The time spent in the field should be spent on sample collection, making field measurements and recording data.

Prepare Sampling and Purging Equipment

The purging and sample collection equipment and all required hardware should be obtained, organized and decontaminated prior to the initiation of the field sampling program. To accommodate waste generated during decontamination, these activities may be completed at the site prior to sampling.

Sample Containers and Preservatives

The appropriate sample containers and associated preservatives must be obtained. The containers and preservatives are normally, but not always, supplied by the laboratory that will be responsible for the analyses. Sample containers should be organized and inventoried several days prior to initiation of the sampling program in order to provide sufficient time to rectify any problems, should they occur. Whenever possible, pre-printed sample labels should be created prior to mobilization, if possible.

Initiation of Field Data Records

Field data sheets should be initiated prior to the start of sampling. Examples of initial data to be recorded include site and sampling location identification, well depth and construction, and purging and sampling collection methods. Additional discussion regarding field records is presented in Section 5.4. Example field data sheets are provided in Attachments E and F. These sheets can be combined in a bound field notebook as well. See SOPs on Sampling Handling, Sample Preservation, and Field Notes and Documentation regarding the requirements for storage/preservation and use of field records, respectively.

5.2.3 Preparatory Field Activities

The following procedures should be conducted in the field prior to well purging and sampling.

Well Maintenance Check

A well maintenance check should be performed that includes a visual inspection of the condition of the protective casing and surface seal. In addition, the well should be inspected for other signs of damage or unauthorized entry. Any problems should be documented.

It is recommended that the bottom of the well not be sounded each time the well is sampled. Routine sounding of the well can increase the risk of inadvertent well contamination because it is difficult to adequately decontaminate the tapes used for this purpose. Well depths obtained from well completion records are generally adequate for the purpose of the determination of well volume. Generally, the only reason to sound well depth is if a need to verify the depth arises, or if you suspect that sediment/soil has collected in the bottom of the well.

Preparation of Well Area

A suitable work area should be established around the perimeter of the well. Sampling equipment should be placed on a clean surface such that it will not become inadvertently contaminated. This work area can be prepared by placing new polyethylene (PE) sheeting on the ground around the well, taking care not to step on it. Alternatives also include the placement of a clean PE-lined trash can, a clean PE or aluminum covered table, or similar, adjacent to the well. Remember – a clean work area leaves a much more favorable impression than a dirty work area.

Water Level Measurements

The depth to water should measured prior to initiation of all sampling activities. The water level measurements should be made following the SOP for Groundwater Level and NAPL Measurements in Monitoring Wells.

Non-Aqueous Phase Liquid (NAPL) Determination

If their presence is suspected, each well should be evaluated for the presence of light or dense non-aqueous phase liquids (LNAPLs or DNAPLs) prior to well purging. The NAPL measurements should be made following the SOP for Groundwater Level and NAPL Measurements in Monitoring Wells.

Calculation of Well Purge Volume

The volume of water standing in the well should be calculated through the application of the depth to water data, the known well depth, and the well diameter using the constants presented below. Well depth information obtained from the well

completion records are generally sufficiently precise for the purpose of well volume calculations that would be used for subsequent purging determinations.

The following conversions allow quick calculation of well casing volumes:

Well Casing Diameter (inches)	Gallons per foot of water
1.0	0.041
2.0	0.163
3.0	0.367
4.0	0.653
6.0	1.469

Alternatively, the well casing volume may be calculated using the formula $V = CF*d^2h$, where

V = volume of water (gallons)

d = diameter of well (inches)

h = height of water column (feet)

CF = conversion factor (0.0408) that includes conversion of cubic feet to gallons, inches to feet, and diameter to radius.

In some states the volume of the entire well (not just the well casing, but entire borehole) is required when determining well volume. Check local state requirements to determine which method of well volume calculation applies to your site. This volume can be calculated in a manner similar to above with the following formula:

$$V = 0.0408\ d^2h + 0.0408\ (D^2-d^2)\ h\varnothing$$

where

V = volume of water in well (gallons)

D = diameter of borehole (inches)

d = diameter of well casing (inches)

h = height of water column (feet)

∅ = porosity of sand pack (often approximated at 0.30)

Which of the above methods should be used should be discussed or defined in the project-specific planning documents.

5.2.4 Well Purging

Monitoring wells must be purged prior to the collection of aqueous phase samples. Specific instructions for the use of purging equipment are presented in Section 4.6.

The placement of a device (in most cases a pump) that will be used for well purging is critical in order to ensure a complete exchange of the entire water column. The intake of a device used for purging should be placed as high in the water column as is possible under pumping conditions. Optimum placement is to have the pump at the top of the water column. This is done so that purging will draw water from the formation into the screened area of the well, and up through the casing, so that the entire static water column can be removed.

If the monitoring well is a slow recharging well, then the pump should be placed near the surface and slowly lowered at a rate similar to groundwater withdrawal. As an alternative approach the pump could be set at no more than three to five feet below the water surface. If the recovery rate of the well is faster than the pump rate and no observable drawdown occurs, the pump can be raised until the intake is within one foot of the top of the water column for the duration of purging. If the pump rate exceeds the well recovery rate, the pump will have to be lowered as needed based upon the amount of drawdown.

Upon completion of purging, the device should continue to be operated as it is slowly withdrawn from the well to purge any water that remains above the pump intake. One should be very careful not to keep the pump on too long after removal, because

a pump can easily burn up without groundwater to cool it. It is recommended that pumps be fitted with backflow prevention valves so that purged water in the discharge tubing does not flow back into the well. Under no circumstances should the pump intake simply be placed at the bottom of the well without first making an effort to evaluate the pumping characteristics of the particular well.

Standard Purging Approach

Initially, groundwater withdrawal should occur no more than three to five feet below the water surface. If the recovery rate of the well is faster than the pump rate and no observable drawdown occurs, the pump should be raised until the intake is within one foot of the top of the water column for the duration of purging. If the pump rate exceeds the well recovery rate, the pump will have to be lowered as needed based upon the amount of drawdown.

An adequate purge is normally achieved when three to five times the volume of standing water in the well has been removed. After three well volumes have been removed, if the chemical parameters have not stabilized according to the criteria given below, additional well volumes may be removed. If the parameters have not stabilized within five volumes, it is at the discretion of the project manager whether or not to collect a sample or to continue purging.

Considering groundwater chemistry, an adequate purge is achieved when the pH, specific conductance, and temperature of the groundwater have stabilized and the turbidity has either stabilized or is below 10 Nephelometric Turbidity Units (NTUs). In very silty formations, the turbidity stabilization criteria given above may be impossible to reach and should be disregarded. Other parameters such as salinity, dissolved oxygen, and oxidation reduction potential also may be important criteria for stabilization, especially under low flow purging. Stabilization occurs when parameter measurements are within 10 percent between two readings spaced

approximately one well volume apart, or under low flow purging, between two readings determined in project planning documents. A water meter quality fitted with flow through cell, which allows continuous monitoring of the above parameters is recommended for these measurements.

Attempts should be made to avoid purging wells to dryness, as previously described. However, even with slow purge rates, a well may be purged dry. In those cases, this constitutes an adequate purge and the well can be sampled when recovery is sufficient (enough volume to fill the sample containers). Recovery criteria are often cited as 80 percent of the original well column height.

Low Stress or Low Flow Groundwater Purging

Sometimes it is desirable to collect representative samples while exerting minimum stress on the water-bearing formation. Typically this is accomplished by limiting the flow rate during purging to the range of 100 to 500 ml/min (0.025 to 0.13 gallons/min). For this procedure, the goal is to induce a steady flow rate while minimizing the drawdown.

It is important to insert the sampling equipment carefully, so as to prevent the re-suspension of silt and clay particles in the well. In order to minimize turbidity, it is preferable to use dedicated equipment, or to allow sufficient time after the installation of non-dedicated equipment to allow soil particles to re-settle before purging and sampling. Sufficient time for settling should be verified by turbidity measurements.

Initially, the purge flow rate should start at approximately 200 ml/min (0.053 gallons/min), and water level should be frequently monitored. Flow rate should be adjusted so that drawdown will not exceed 0.3 ft, or approximately 2 percent of the saturated thickness of low permeability formations, whichever is greater.

Indicator parameters which should be monitored for low stress groundwater purging include turbidity, specific conductance, temperature, pH, ORP, and DO. In-line analyzers and continuous readout displays are recommended, so that the sample is not exposed to air prior to measurement. The well is considered stabilized when three consecutive readings vary no more than 10% or are below 10 NTUs for turbidity, 3% for specific conductance, 0.1 SU for pH, 10 mV for ORP, and 10% for DO. Measurement of the indicator parameters should continue every three to five minutes until these measurements indicate stability in water quality. If these parameters have not stabilized after about an hour, the well should be purged until a minimum of three well volumes have been removed.

5.2.5 Groundwater Sampling

It is important that wells be sampled as soon as possible after purging. If adequate volume is available, the well should be sampled immediately as long as the well has recovered to 80 percent of the original water column height. If not, sampling should occur as soon as the well has recovered sufficiently to provide adequate volume. Specific instructions for the use of sampling equipment are presented in Section 5.2.6.

Standard Sampling Approach

As with purging equipment, there are a number of considerations in the selection of sample collection equipment. Furthermore, it is common to use a different device for sample collection than for purging. An example would be to purge with the use of submersible pump and to collect the sample with the use of a disposable bailer. A summary of well sampling equipment is provided in Attachment B.

As discussed previously, consideration should be given to the order in which sample containers are to be filled for various parameter groups. The order should be determined on the basis of parameter sensitivity to volatilization, pH change, or oxidation, and the priority for analytical data in cases where the water volume in the well is less than what is required for analysis. In general, volatile organic compounds are the most sensitive constituents to volatilization so the sample for these parameters should be containerized immediately. Likewise, pH change occurs rapidly in samples that are in contact with air, so pH measurements and the containerization of pH sensitive parameters, such as anions (e.g., nitrate, sulfate), or metals, (e.g., ferrous iron or Fe^{2+}), should also be implemented expeditiously.

Low Stress Groundwater Sampling

Sometimes it is desirable to collect representative samples while exerting minimum stress on the water-bearing formation. Typically this is accomplished by limiting the flow rate during sampling to the range of 100 to 250 ml/min (0.025 to 0.065 gallons/min). Sampling flow rate should not exceed the purge flow rate for which water quality indicator parameters stabilized. Sampling equipment must be the same equipment that was used for purging, and should not be moved between purging and sampling activities.

5.2.6 Equipment Instructions

This section provides specific instructions for the installation and use of various devices for both well purging and groundwater sample collection, and includes the following equipment:

- Bailer
- Bladder pump
- Small diameter (2-inch) electric submersible pump

- Large diameter (4-inch) electric submersible pump
- Compressed gas-driven piston pump
- Gasoline powered centrifugal pump
- Peristaltic suction pump
- Inertial lift pump.

It is recognized that a combination of the procedures may be employed. An example would be the use of a small diameter electric submersible pump for purging and a bailer for sample collection. The specific methods to be used for purging and sampling a well should be outlined in the project-specific planning documents.

Bailer

A bailer is one of the simplest groundwater sampling devices. The same bailer can be used for both purging and sample collection. Bailers consist of a rigid tube equipped with a bottom and/or top check valve that is lowered into the well on a flexible cord.

Required Equipment:

- Bailer of appropriate size and material
- New bailer cord of appropriate material
- New disposable gloves of appropriate material
- Clean trash can and supply of trash can liners, or new plastic sheeting
- Five gallon pail, graduated in minimum one gallon increments
- Bottom emptying device (optional)
- Water quality monitoring equipment

Purging Instructions:

- Determine the volume of water to be purged, as described previously.
- Place new polyethylene (PE) sheet on suitable surface adjacent to well, taking care not to step on the PE sheet.
- Don a new pair of gloves. Decontaminate equipment as outlined in decontamination SOP
- Attach a cord to the bailer.
- Lower the bailer into the well until it is completely submerged. The bailer should be lowered slowly so that it does not cause a splash that could aerate the water column.
- Pull the bailer out of the well while placing the cord on the PE sheet or in a PE-lined bucket. An alternate method is to wind the bailer cord between the hands. Care should be taken to prevent the bailer or the cord from contacting any surface other than the interior of the well or the plastic liner.
- Empty the bailer into the pail.
- Repeat the operation until the necessary volume of water has been purged from the well.
- Monitor indicator parameters as discussed previously.

Sampling Instructions:

- Prepare the well area and lower the bailer into the well following the method described previously for purging.
- Allow the bailer to fill slowly and then gently retrieve the bailer from the well while avoiding contact with the sides of the well. Care should be taken to prevent the bailer or the line from contacting any surface other than the interior of the well or the PE sheet or PE-lined bucket.
- Fill the sample containers slowly. The use of a bottom emptying device is preferred in that sample aeration and sample volume loss are minimized.

- Bottles should be filled in order of sensitivity to volatilization and oxidation as discussed in Section 5.1.3 or as outlined in project-specific planning documents. Care should be taken to ensure that no head space remains in the volatile organic vials. Certain other parameters may also require minimizing headspace (e.g., reduced or ferrous iron).
- Filtered samples can be obtained by filling a non-preserved sample receptacle, and then transferring the liquid through an in-line filter (typically a 0.45 μm disposable filter) into a preserved sample receptacle using a peristaltic pump. Other gravity feed filters also are available.

Bladder Pump

A bladder pump is one of the easiest devices to operate for the purpose of purging and sample collection. The bladder pump is often dedicated to the well and can be used in conjunction with an inflatable packer in order to minimize the purge volume necessary to accomplish effective purging.

Required Equipment:

- Bladder pump
- Tubing of appropriate type and length
- Bladder pump controller
- Compressed air source
- New disposable gloves of appropriate material
- New plastic sheeting
- Five gallon pail, graduated in minimum one gallon increments
- Water quality monitoring equipment (preferably a flow through cell).
-

Installation Instructions (initial installation or non-dedicated use):

- Place new polyethylene (PE) sheet on suitable surface adjacent to well, taking care not to step on the PE sheet.
- Don a new pair of gloves.
- Assemble the pump and tubing and lower into the well being careful not to contact any surface other than the interior of the well or the plastic sheeting.
- Decontaminate equipment and pump (if not dedicated) as outlined in decontamination SOP
- Install the air inlet and water discharge fittings on top of the well (for a dedicated installation).

Purging Instructions:

- Refuel the gasoline-powered compressor, if used, at a location that is remote from the well, being very careful not to spill any fuel on equipment or clothing that will be used at the well site.
- Place the gasoline-powered compressor as far from the well as possible in a down-wind direction to eliminate potential exhaust impact to sampling.
- Connect the compressed air source and pump controller to the pump as per manufacturer's instructions.
- Don a new pair of gloves after handling the gasoline-powered compressor.
- Determine the volume of water to be purged, as described previously.
- Start the pump by opening the regulator on the controller, which allows compressed air to flow into the system.
- The controller should be adjusted to maximize the flow rate while minimizing the rapid "jolting" of the tubing as water is drawn into pump.
- Direct the pump discharge to the five gallon pail and determine the pumping rate.
- Continue pumping until the necessary volume of water has been purged from the well.

- Monitor indicator parameters as discussed previously.

Sampling Instructions:

- Allow the well to recharge after completion of purging, if necessary.
- Resume pumping after adjusting the regulator to the minimum pressure that will still allow water to be pumped to the surface.
- Collect the samples by pumping directly into each of the required containers.
- Bottles should be filled in order of sensitivity to volatilization and oxidation as discussed in Section 5.1.3 or as outlined in project-specific planning documents. Care should be taken to ensure that no head space remains in the volatile organic vials. Certain other parameters may also require minimizing headspace (e.g., reduced or ferrous iron).
- Filtered samples can easily be obtained by installing an in-line, 0.45 μm disposable cartridge filter directly onto the pump discharge.

Small Diameter (2") Electric Submersible Pump

A small-diameter electric submersible pump (Grundfos Redi-Flo2 or equivalent) can be operated with a wide variety of pumping rates such that it is very versatile for both well purging and sample collection. This type of pump can be used in either a dedicated or non-dedicated mode. Collecting groundwater samples from these pumps is only appropriate if approved project-specific planning documents specifically include this technique for collecting samples.

Required Equipment:

- Small diameter electric submersible pump
- Pump shroud (when used in a six-inch or larger well to minimize turbulence, to keep motor cool)
- Teflon® jacketed power cable on a plastic reel

- Tubing of appropriate type and length
- Check valve (optional)
- Electric pump controller with appropriate power plug
- 230 volt, single phase, electric power source, >10 amps
- Tool kit including basic tools, tubing cutters, extra tubing connector bracket, electrical connectors, wire ties, etc.
- Ground fault interrupter (GFI)
- New disposable gloves of appropriate material
- New PE sheeting
- Five gallon pail, graduated in minimum one gallon increments
- Water quality monitoring equipment (preferably a flow through cell).

Installation Instructions:

- Place new polyethylene (PE) sheet on suitable surface adjacent to well, taking care not to step on the PE sheet.
- Don a new pair of gloves.
- Assemble the pump, tubing, optional check valve, and electric power cables.
- Decontaminate equipment and pump (if not dedicated) as outlined in decontamination SOP.
- Prime pump with deionized water by inverting the pump and removing fill cap.
- Lower pump slowly into the well, being careful not to contact any surface other than the interior of the well or the plastic sheeting. When lowering the pump be particularly sensitive to areas that suggest drag or problems in the well where the pump could get stuck. If a problem exists do not continue, but discuss ways to investigate with PM or senior technical personnel.
- Place the pump intake as discussed in Section 5.4.2. Monitor the pump discharge and well hydraulics as discussed previously.

Purging Instructions:

- Refuel the electric generator at a location that is remote from the well, being very careful not to spill any fuel on equipment or clothing that will be used at the well site.
- Place the gasoline-powered compressor as far from the well as possible in a down-wind direction to eliminate potential exhaust impact to sampling.
- Don a new pair of gloves after handling the generator.
- Connect electric power, GFI, and pump controller to the pump.
- Determine the volume of water to be purged, as described previoulsy.
- Start the pump.
- Direct the pump discharge to the five gallon pail and determine the pumping rate.
- Continue pumping until the necessary volume of water has been purged from the well.
- If the pump intake has been placed deeply down into the water column for some reason, slowly withdraw the pump upward through the water column while it is still running to purge all water standing above the pump <u>unless</u> the pump will be used for sample collection.
- Shut off the pump <u>rapidly</u> whenever the pump stops pumping water.
- Monitor indicator parameters as discussed previously.

Sampling Instructions:

- Allow the well to recharge after completion of purging, if necessary.
- Resume pumping and adjust the pumping rate to the slowest possible rate.
- Collect the samples by pumping directly into each of the required containers.
- Bottles should be filled in order of sensitivity to volatilization and oxidation as discussed in Section 5.1.3 or as outlined in project-specific planning documents. Care should be taken to ensure that no head space remains in

the volatile organic vials. Certain other parameters may also require minimizing headspace (e.g., reduced or ferrous iron).

- Filtered samples can easily be obtained by installing an in-line, 0.45 μm disposable cartridge filter directly onto the pump discharge.

Large Diameter (4") Electric Submersible Pump

A large-diameter electric submersible pump is most frequently used for purging large-diameter wells that cannot be efficiently purged using other methods. Large-diameter pumps can also be used for sample collection for parameters that are not particularly pH or pressure sensitive. This type of pump is usually not dedicated. Collecting groundwater samples from these pumps is only appropriate if approved project-specific planning documents specifically include this technique for collecting samples.

Required Equipment:

- Large-diameter, stainless steel electric submersible pump
- [Optional] Check valve, install internally within the pump or externally between the pump and the tubing
- Electric power cable on a plastic reel (Teflon® jacketed cable is preferred)
- Stainless steel or polypropylene support line
- 1/2" to 1" PE Tubing of appropriate length
- Flow control valve
- 120 or 240 volt electric power source (as appropriate)
- Ground fault interrupter (GFI)
- Tool kit including assorted basic tools, tubing cutters, wire cutters, hose clamps, waterproof connectors, wire ties, hose fittings, assorted pipe nipples and adapters, etc.
- New disposable gloves of appropriate material
- New plastic sheeting

- Five gallon pail, graduated in minimum one gallon increments or flow meter
- Bleeder tee (if the submersible pump is used for sample collection). This consists of a tee with a large diameter, valved pump discharge port and a Water quality monitoring equipment.
- small diameter, valved port equipped with a sample weephole.
- Water quality monitoring equipment (preferably a flow through cell).

Installation Instructions:

- Place new polyethylene (PE) sheet on suitable surface adjacent to well, taking care not to step on the PE sheet.
- Don a new pair of gloves.
- Decontaminate equipment and pump (if not dedicated) as outlined in decontamination SOP.
- Assemble the pump, tubing, flow control valve, electric power cables and support line and lower into well being careful not to contact any surface other than the interior of the well or the PE sheeting.
- The tubing, electrical power cable and support line should be fastened together at 15 to 20 foot intervals with the use of nylon wire ties (<u>not</u> with electrical tape) taking care to leave adequate slack in the electric power cable.
- The use of a check valve is recommended to prevent rapid backflow of water from the tubing after the pump is shut off. It is recognized, however, that the use of a check valve makes it more difficult to pull the pump from the well due to the added weight of the water in the tubing and can increase the chance of "sand locking" occurring in the pump.
- Lower pump slowly into the well, being careful not to contact any surface other than the interior of the well or the plastic sheeting. When lowering the pump be particularly sensitive to areas that suggest drag or problems in the well where the pump could get stuck. If a problem exists do not

continue, but discuss ways to investigate with PM or senior technical personnel.

- Place the pump intake as discussed in Section 5.4.2. Monitor the pump discharge and well hydraulics as discussed previously.

Purging Instructions:

- Refuel the electric generator at a location that is remote from the well, being very careful not to spill any fuel on equipment or clothing that will be used at the well site.
- Place the gasoline-powered compressor as far from the well as possible in a down-wind direction to eliminate potential exhaust impact to sampling.
- Don a new pair of gloves after handling the generator.
- Connect electric power and GFI to the pump.
- Determine the volume of water to be purged, as described previously.
- Start the pump.
- Determine the pumping rate either by directing the pump discharge to the five gallon pail or with the use of a flow meter.
- Adjust pumping rate to match the yield of the well.
- Continue pumping until the necessary volume of water has been purged from the well.
- If the pump intake has been placed deeply down into the water column for some reason, slowly withdraw the pump upward through the water column while it is still running to purge all water standing above the pump.
- Shut off the pump <u>immediately</u> whenever the pump stops pumping water.
- Dispose of the tubing and support line after use.
- Monitor indicator parameters as discussed previously.

Sampling Instructions:

- Allow the well to recharge after completion of purging, if necessary.
- Resume pumping and adjust the bleeder tee valves so that a slow, steady, non-aerated flow emanates from the bleeder tee weephole (approximately 100 ml/min).
- Collect the samples directly from the weephole into each of the required containers.
- Bottles should be filled in order of sensitivity to volatilization and oxidation as discussed in Section 5.1.3 or as outlined in project-specific planning documents. Care should be taken to ensure that no head space remains in the volatile organic vials. Certain other parameters may also require minimizing headspace (e.g., reduced or ferrous iron).
- Filtered samples can easily be obtained by installing an in-line, 0.45 μm disposable cartridge filter directly onto the pump discharge

Compressed Gas-Driven Piston Pump

A compressed gas-driven piston pump can be used for purging and sample collection in two-inch diameter wells at great depths. This type of pump is not typically dedicated. Collecting groundwater samples from these pumps is only appropriate if approved project-specific planning documents specifically include this technique for collecting samples

Required Equipment:

- Small diameter air driven pump
- Tubing of appropriate type and length
- Pump controller
- Compressed air source
- New disposable gloves of appropriate material
- New plastic sheeting

- Five gallon pail, graduated in minimum one gallon increments
- Water quality monitoring equipment (preferably a flow through cell).

Installation Instructions:

- Place new polyethylene (PE) sheet on suitable surface adjacent to well, taking care not to step on the PE sheet.
- Don a new pair of gloves.
- Decontaminate equipment and pump (if not dedicated) as outlined in decontamination SOP.
- Assemble the pump and tubing and lower into the well, being careful not to contact any surface other than the interior of the well or the plastic sheeting.
- Lower pump slowly into the well, being careful not to contact any surface other than the interior of the well or the plastic sheeting. When lowering the pump be particularly sensitive to areas that suggest drag or problems in the well where the pump could get stuck. If a problem exists do not continue, but discuss ways to investigate with PM or senior technical personnel.
- Place the pump intake as discussed in Section 5.4.2. Monitor the pump discharge and well hydraulics as discussed previously.

Purging Instructions:

- Connect the air source and pump controller to the pump.
- Determine the volume of water to be purged, as described above.
- Start the pump.
- Direct the pump discharge to the five gallon pail and determine the pumping rate.
- Continue pumping until the necessary volume of water has been purged from the well.

- If the pump intake has been placed deeply down into the water column for some reason, slowly withdraw the pump upward through the water column while it is still running to purge all water standing above the pump.
- Shut off the pump immediately whenever pump stops pumping water.
- Monitor indicator parameters as discussed previously.

Sampling Instructions:

- Allow the well to recharge after completion of purging, if necessary.
- Resume pumping and adjust to a slow pumping rate (approximately 100 ml/min).
- Collect the samples by pumping directly into each of the required containers.
- Bottles should be filled in order of sensitivity to volatilization and oxidation as discussed in Section 5.1.3 or as outlined in project-specific planning documents. Care should be taken to ensure that no head space remains in the volatile organic vials. Certain other parameters may also require minimizing headspace (e.g., reduced or ferrous iron).
- Filtered samples can easily be obtained by installing an in-line, 0.45 μm disposable cartridge filter directly onto the pump discharge.

Gasoline Powered Centrifugal Suction Pump

A two-cycle gasoline-engine-powered centrifugal pump provides an effective way to rapidly purge any well in which the depth to the pumped water level is less than about 20 to 25 feet. This type of pump is normally used with dedicated tubing. Groundwater sampling cannot be conducted using these pumps.

Required Equipment:

- Two-cycle gasoline-engine-powered centrifugal pump
- 1/2" to 3/4" PE tubing of appropriate length

- Flow control valve
- Check (foot) valve
- Supply of distilled or deionized water
- New disposable gloves of appropriate material
- New PE sheeting
- Five gallon pail, graduated in minimum one gallon increments
- Water quality monitoring equipment

Installation Instructions:

- Place new polyethylene (PE) sheet on suitable surface adjacent to well, taking care not to step on the PE sheet.
- Don a new pair of gloves.
- Decontaminate equipment such as hose (if not dedicated) as outlined in decontamination SOP.
- A check valve should be installed on the bottom of the tubing in order to prevent backflow of water into the well from the tubing and the pump after the pump is shut off. The check valve will also aid in priming the pump.
- Lower the tubing into well, being careful not to contact any surface other than the interior of the well or the PE sheeting. The outside of the tubing should be decontaminated following instructions in the Decontamination SOP.
- Place the intake of the tubing as high in the well as is possible but deep enough that it will not break suction.

Purging Instructions:

- Refuel the pump at a location that is remote from the well, being very careful not to spill any fuel on equipment or clothing that will be used at the well site. Pay strict attention to the required fuel mixture (gasoline/oil) that is specified by the pump manufacturer.

- Place the gasoline-powered compressor as far from the well as possible in a down-wind direction to eliminate potential exhaust impact to sampling.
- Connect the tubing to the pump.
- Don a new pair of gloves after handling the pump.
- Determine the volume of water to be purged, as described previously.
- Prime the pump using either distilled, deionized, or potable water. Use potable water only if the source has been tested analytically and found to be clear of the constituents of interest. Alternately, a pump equipped with a check valve on the tubing can be primed by working the tubing in an up and down motion, as with the intertial lift pump. This second approach should only be used if no other alternative is available for priming the pump.
- Start the pump.
- Direct the pump discharge to the five gallon pail and determine the pumping rate.
- Adjust the pumping rate to match the yield of the well.
- Continue pumping until the necessary volume of water has been purged from the well.
- If the pump intake tubing has been placed deeply down into the water column for some reason, slowly withdraw the tubing upward through the water column while it is still running to purge all water standing above the bottom intake.
- Dispose of the tubing after use, unless it is dedicated.
- Monitor indicator parameters as discussed previously.

Sampling Instructions:

- A centrifugal pump is not suitable and may not be used for sample collection.

Peristaltic Suction Pump

A peristaltic pump can be used to purge shallow, small diameter wells at a low to modest rate. The lift capacity is very limited with these pumps and often exceeded at groundwater depths of greater than 20 to 25 feet (depending upon pump size). This type of pump is normally used with dedicated tubing. Peristaltic pumps can also be used for sample collection for parameters that are not pH or pressure sensitive. Collecting groundwater samples from these pumps is only appropriate if approved project-specific planning documents specifically include this technique for collecting samples.

Required Equipment:

- Peristaltic pump, electric powered 12 VDC.
- 12 VDC power source, such as a sealed motorcycle battery or connection to vehicle battery.
- 3/8" to 1/2" PE, PP, or Teflon® tubing of appropriate length.
- 5/8" OD, 3/8" ID medical grade silicone tubing. Do not attempt to use Tygon® tubing.
- New disposable gloves of appropriate material.
- New PE sheeting.
- Five gallon pail, graduated in minimum one gallon increments.
- Water quality monitoring equipment (preferably a flow through cell).

Installation Instructions:

- Place new polyethylene (PE) sheet on suitable surface adjacent to well, taking care not to step on the PE sheet.
- Don a new pair of gloves.
- Replace the silicone tubing in the pump head if the pump will used for sample collection.
- Lower the tubing into the well, being careful not to contact any surface other than the interior of the well or the plastic sheeting.

- Place the intake of the tubing as high in the well as possible but deep enough that it will not break suction.

Purging Instructions:

- Connect the tubing to the pump.
- Determine the volume of water to be purged, as described above.
- Start the pump.
- Direct the pump discharge to the five gallon pail and determine the pumping rate.
- Continue pumping until the necessary volume of water has been purged from the well.
- If the pump intake tubing has been placed deeply down into the water column for some reason, slowly withdraw the tubing upward through the water column while it is still running to purge all water standing above the bottom intake.
- Dispose of the tubing after use.
- Monitor indicator parameters as discussed previously.

Sampling Instructions:

- Allow the well to recharge after completion of purging, if necessary.
- Resume pumping and adjust to a slow pumping rate, (approximately 100 ml/min) if the pump is equipped with a speed control.
- Collect the samples by pumping directly into each of the required containers.
- Bottles should be filled in order of sensitivity to volatilization and oxidation as discussed in Section 5.1.3 or as outlined in project-specific planning documents. Care should be taken to ensure that no head space remains in the volatile organic vials. Certain other parameters may also require minimizing headspace (e.g., reduced or ferrous iron).

- Filtered samples can easily be obtained by installing an in-line, 0.45 μm disposable cartridge filter directly onto the pump discharge.

Inertial Lift Pump

An inertial lift pump is a very simple device that can be used to purge and sample wells of almost any diameter to a depth of approximately 100 feet. This type of pump is normally dedicated to the well. Collecting groundwater samples from these pumps is only appropriate if approved project-specific planning documents specifically include this technique for collecting samples.

Required Equipment:

- 1/2" OD HDPE pump tubing
- Check valve
- Electric motor driven lift arm [OPTIONAL]
- Electric power source [OPTIONAL]
- New disposable gloves of appropriate material
- New plastic sheeting
- Five gallon pail, graduated in minimum one gallon increments
- Water quality monitoring equipment (preferably a flow through cell).

Installation Instructions:

- Place new polyethylene (PE) sheet on suitable surface adjacent to well, taking care not to step on the PE sheet.
- Don a new pair of gloves.
- Decontaminate equipment and pump (if not dedicated) as outlined in decontamination SOP.
- Install self threading valve on the bottom of the tubing

- Lower pump slowly into the well, being careful not to contact any surface other than the interior of the well or the plastic sheeting. When lowering the pump be particularly sensitive to areas that suggest drag or problems in the well where the pump could get stuck. If a problem exists do not continue, but discuss ways to investigate with PM or senior technical personnel.
- Place the tubing intake as high in the well as is possible but deep enough that it will not break suction. The tubing intake can be placed deeper in the well if the inertial lift pump will also be used for sample collection.

Purging Instructions:

- Refuel the electric generator, if used, at a location that is remote from the well, being very careful not to spill any fuel on equipment or clothing that will be used at the well site.
- Place the generator as far from the well as possible in a down-wind direction.
- Don a new pair of gloves after handling the generator.
- Connect the tubing to the pump arm, if used.
- Determine the volume of water to be purged, as described above.
- Start pumping by working the pump tubing in an up and down motion.
- Direct the pump discharge to the five gallon pail and determine the pumping rate.
- Continue pumping until the necessary volume of water has been purged from the well.
- If the pump intake tubing has been placed deeply down into the water column for some reason, slowly withdraw the tubing upward through the water column while it is still running to purge all water standing above the bottom intake. This should be accomplished by reconnecting the pump arm at progressively lower points on the tubing and allowing the pump to

operate for short periods of time. This step is not required if the inertial lift pump will be used for sample collection.

- Dispose of the tubing after use, unless it is left in the well.
- Monitor indicator parameters as discussed previously.

Sampling Instructions:

- Allow the well to recharge after completion of purging, if necessary.
- Resume pumping at a slow rate either by decreasing the speed of the lift arm unit or by operating the tubing manually.
- Collect the samples by pumping directly into each of the required containers.
- Bottles should be filled in order of sensitivity to volatilization and oxidation as discussed in Section 5.1.3 or as outlined in project-specific planning documents. Care should be taken to ensure that no head space remains in the volatile organic vials. Certain other parameters may also require minimizing headspace (e.g., reduced or ferrous iron).
- Filtered samples can easily be obtained by installing an in-line, 0.45 μm disposable cartridge filter directly onto the pump discharge.

5.2.7 Field Measurements

The final determination of pH, specific conductance, and temperature should be made immediately upon collection of the samples. It is preferred that these parameters be measured continuously using a water quality meter coupled with a "flow through" cell. Alternately, these measurements would be made in an aliquot contained in a disposable plastic cup.

5.3 FIELD RECORDS

Accurate field records must be maintained to document groundwater sampling activities. These records include technical field data, sample identification labels, and chain-of-custody information for each sample. These records are described in detail in the following sections, and discussed in the Field Documentation and Sampling Handling SOPs.

Specifically for groundwater sampling, the field sampling records should include, at a minimum, the following information:

- Sampling location
- Date and time
- Condition of the well
- Static water level (depth to water)
- Depth to the bottom of the well
- Calculated well volume
- Purging method
- Actual purged volume
- Sample collection method
- Sample description
- Field meter calibration data
- Water quality measurements
- General comments (weather conditions, etc.)

All data entries should be made using black indelible ink and should be written legibly. Entry errors should be crossed out with a single line, dated, and initialed by the person making the correction.

5.4 SAMPLE SHIPMENT

Shipment of samples to an analytical laboratory is usually required upon completion of sample collection. Proper packaging is necessary in order to protect the sample containers, to maintain the samples at or below a temperature of 4°C, and to comply with all applicable transportation regulations. See the Sampling Handling and Management SOP for further details.

5.5 SPECIAL REGULATORY REQUIREMENTS

A number of states and USEPA regions have specific groundwater sampling requirements that must be followed. These requirements must be determined in advance, and should be incorporated in to the project specific planning documents.

6.0 REFERENCES

American Society for Testing Materials. "D 4448, Standard Guide for Sampling Groundwater Monitoring Wells."

Armstrong, R. and F.R. McLaren, 1984. "The Suction Side Sample Catcher in Ground Water Quality Sampling," Ground Water Monitoring Review, Fall 1984, pp. 48-53.

Barcelona, M.J., J.P. Gibb, J.A. Helfrich and E.E. Garske, 1985. Practical Guide to Groundwater Sampling, Illinois State Geological Survey Contract Report 374, pp. 94.

Barcelona, M.J., and J.A. Helfrich, 1986. "Well Construction and Purging Effects on Ground-Water Samples," Environmental Science and Technology, vol. 20, no. 11, pp. 1179-1184.

Barcelona, M.J., J.A. Helfrich, and E.E. Garske, 1988. "Verification of Sampling Methods and Selection of Materials for Ground-Water Contamination Studies," Ground-Water Contamination: Field Methods, ASTM Special Technical Publication 963, pp. 221-231.

Barker, J.F. and R. Dickhout, 1988. "An Evaluation of Some Systems for Sampling Gas-Charged Ground Water for Volatile Organic Analysis," Ground Water Monitoring Review, Fall 1988, v. 8, no. 4, pp. 112-120.

Claassen, H.C., 1982. Guidelines and Techniques for Obtaining Water Samples That Accurately Represent the Water Chemistry of an Aquifer, U.S. Geological Survey, Open-File Report 82-1024, Lake, Colorado, pp. 49.

Clarke A.N., D. R. Davis and J. H. Clarke, "Environmental Project Definition with the Analytical Laboratory: The First Step Toward Total Quality Assurance," American Environmental Laboratory, October, 1990.

Ficken, J.H, 1988. "Recent Development of Downhole Water Samplers for Trace Organics," Ground-Water Contamination: Field Methods, ASTM Special Technical Publication 963, pp. 253-257.

Gibb, J.P., R.M. Schuller and R.A. Griffin, 1981. Procedures for the Collection of Representative Water Quality Data from Monitoring Wells. Illinois State Water Survey Cooperative Groundwater Report 7.

Gibb, J.P., R.M. Schuller, and R.A. Griffin, 1980. Monitoring Well Sampling and Preservation Techniques, EPA-600/9-80-101.

Gibs, Jacob, and Thomas E. Imbrigiotta, 1990. "Well-Purging Criteria for Sampling Purgeable Organic Compounds," Ground Water, vol. 28, no. 1.

Giddings, T., 1983. "Bore-Volume Purging to Improve Monitoring Well Performance: An Often-Mandated Myth," Proceedings of the Third National Symposium on Aquifer Restoration and Ground Water Monitoring, National Water Well Association, Dublin, Ohio, pp. 253-256.

Gillham, R.W., M.J.L. Robin, J.F. Barker and J.A. Cherry, 1983. Groundwater Monitoring and Sample Bias, Environmental Affairs Department, American Petroleum Institute, pp. 206.

Herzog, B.L., S.J. Chou, J.R. Valkenburg, and R.A. Griffin, 1988. "Changes in Volatile Organic Chemical Concentrations After Purging Slowly Recovering Wells," Ground Water Monitoring Review, Fall 1988, v. 8, no. 4, pp. 93-99.

Herzog, B., J. Pennino, and G. Nielsen, 1991. "Ground-Water Sampling," Practical Handbook of Ground-Water Monitoring, David M. Nielsen editor, Lewis Publishers, Chelsea, MI, pp. 449-499.

Ho, J.S.Y., 1983. "Effect of Sampling Variables on Recovery of Volatile Organics in Water," Journal of American Water Works, November 1983, pp. 583-586.

Imbrigiotta, T.E., J. Gibs, T.V. Fusillo, G.R. Kish, and J.J. Hochreiter, 1988. "Field Evaluation of Seven Sampling Devices for Purgeable Organic Compounds in Ground Water," Ground-Water Contamination: Field Methods, ASTM Special Technical Publication 963, pp. 258-273.

Kasper, R.B. and J.A. Serkowski, 1988. "Evaluation of Sampling Equipment for RCRA Monitoring in a Deep Unconfined Aquifer," Proceedings of the Second National Outdoor Action Conference on Aquifer Restoration and Ground Water Monitoring, National Water Well Association, Worthington, Ohio, pp. 445-455.

McAlary, T.A. and J.F. Barker, 1987. "Volatilization Losses of Organics During Ground Water Sampling from Low Permeability Materials," Ground Water Monitoring Review, Fall 1987, pp. 63-68.

NCASI, 1982. "A Guide to Groundwater Sampling", NCASI Technical Bulletin, No. 362, January 1982.

New Jersey Department of Environmental Protection, 1988. Field Sampling Procedures Manual, pp. 414

Nielsen, D.M. and G.L. Yeates, 1985. "A Comparison of Sampling Mechanisms Available for Small-Diameter Ground Water Monitoring Wells," Ground Water Monitoring Review, Spring 1985, pp. 83-99.

Panko, A.W. and P. Barth, 1988. "Chemical Stability Prior to Ground-Water Sampling: A Review of Current Well Purging Methods," Ground-Water Contamination: Field Methods, ASTM Special Technical Publication 963, pp. 232-239.

Rannie, E.H. and R.L. Nadon, 1988. "An Inexpensive, Multi-Use, Dedicated Pump for Ground Water Monitoring Wells," Ground Water Monitoring Review, Fall 1988, v. 8, no. 4, pp. 100-107.

Scalf, M.R., J.F. McNabb, W.J. Dunlap, R.L. Cosby, and J.S. Fryberger, 1981. Manual of Ground-Water Quality Sampling Procedures, September 1981, Robert S. Kerr Environmental Research Laboratory, Ada, Oklahoma, EPA-600/2-81-160.

Schalla, R., D.A. Myers, M.A. Simmons, J.M. Thomas, and A.P. Toste, 1988. "The Sensitivity of Four Monitoring Well Sampling Systems to Low Concentrations of Three Volatile Organics," Ground Water Monitoring Review, Summer 1988, pp. 90-96.

Schuller, R.M., J.P. Gibb, and R.A. Griffin, 1981. "Recommended Sampling Procedures for Monitoring Wells," Ground Water Monitoring Review, Spring 1981, pp. 42-46.

United States Environmental Protection Agency Region IV, 1996. Environmental Investigations and Standard Operating Procedures and Quality Assurance Manual, 1996, pp. 7-1 - 7-10.

United States Environmental Protection Agency, 1991. Compendium of ERT Groundwater Sampling Procedures, EPA/540/P-91/007, January 1991.

Unwin, J.P. and D. Huis, 1983. "A Laboratory Investigation of the Purging Behavior of Small-Diameter Monitoring Well," Proceedings of the Third Annual Symposium on Ground Water Monitoring and Aquifer Restoration, National Water Well Association, Dublin, Ohio, pp. 257-262.

Unwin, J. and V. Maltby, 1988. "Investigations of Techniques for Purging Ground-Water Monitoring Wells and Sampling Ground Water for Volatile Organic Compounds," Ground-Water Contamination: Field Methods, ASTM Special Technical Publication 963, pp. 240-252.

7.0 ATTACHMENTS

Attachment A - Groundwater Sampling Checklist

Attachment B - Summary of Well Purging Equipment

Attachment C - Summary of Well Sampling Equipment

Attachment D - Purging and Sampling Equipment Matrix

Attachment E – Example Groundwater Sampling Field Data Sheet

ATTACHMENTS

Attachment A. Groundwater Sampling Checklist

Planning

- ☐ Select well purging method
- ☐ Determine well purging strategy
  - ☐ Purging until of indicator parameters stabilize (±10%).
  - ☐ Purge predetermined number of well volumes (usually 3 to 5).
  - ☐ Low yield wells purged until dryness.
  - ☐ Others
- ☐ Determine containerization and disposal method for purge water
- ☐ Select well sampling method
- ☐ Determine groundwater sampling sequence

Preparatory Office Activities

- ☐ Obtain and decontaminate appropriate purging and sample collection equipment.
- ☐ Obtain appropriate sample containers and preservatives from laboratory.
- ☐ Inventory sample containers and preservatives.
- ☐ Pre-label sample containers.
- ☐ Initiate field data record for each well.
- ☐ Communicate sampling schedule with analytical laboratory and site contact or other parties, as required.

Preparatory Field Activities

- ☐ Perform well maintenance check.
- ☐ Prepare clean work area.
- ☐ Determine the depth to groundwater (±0.02 ft).
- ☐ Calculate the water volume standing in the well (±2%).

Well Purging

- ☐ Place purging device at proper depth to ensure complete purging of well (if device is not also used for sample collection).
- ☐ Purge well, following previously selected strategy.
- ☐ Handle and dispose of purge water using previously determined method.

Well Sampling

- ☐ Collect groundwater sample.
- ☐ Fill containers and made field determinations in order of decreasing sensitivity to volatilization and/or pH change.
- ☐ Fill all other sample containers.
- ☐ Record all technical data.
- ☐ Maintain chain of custody records.
- ☐ Pack and ship samples to prevent breakage, to maintain sample temperature of 4°C and to comply with Dangerous Goods regulations.

Attachment B. Summary of Well Purging Equipment

Description	Pumping Rate (gpm)	Well Diam. (inches)	Depth Limit (feet)	Can it be Dedicated?	Materials	Advantages	Disadvantages	Manufacturers
Bailer								
Tube with bottom and/or top check valve, suspended by line.	0.2 - 2	Unlimited	Unlimited	Yes	• PVC • Teflon ® • HDPE • SS	• Inexpensive • Simple • Can yield high quality samples • No power required • Easily cleaned	• Awkward to use • Can aerate sample if not used carefully • Increases likelihood of turbid samples • Labor intensive	Timco: Johnson: Voss:
Small Diameter (2") Electric Submersible Pump								
Electrically driven impeller pump.	0.1 - 9	2 - 4	75 - 300	Yes	• SS / Teflon ®	• Relatively high pump rate • Effective for deep well purging	• Requires 230 VAC power source • High capital cost • Deep sampling reduces efficiency	Grundfos Fultz
Large Diameter (4") Electric Submersible Pump								
Electrically driven impeller pump.	4 - 20	> = 4	Unlimited	Not typically	• SS	• High pump rate • Effective for deep wells • Moderate cost	• Difficult to handle & decon. • Requires AC power source	Grundfos
Peristaltic (Suction) Pump								
Elastic tubing that is sequentially squeezed by rollers.	1-3	< = 2	± 25	Yes, internal elastic tubing & pump tubing	• Teflon ® • HDPE • PP	• Flow easily controlled • Portable • Inexpensive • Relatively simple	• Requires power source • Slow purging rate	Isco, Masterflex

Notes:

SS: Stainless Steel
HDPE: High density polyethylene
PP: Polypropylene
VAC: Voltage AC Source
PVC: Polyvinyl Chloride
TSS: Total Suspended Solids
VOCs: Volatile Organic Compounds

Attachment C. Summary of Well Sampling Equipment

Description	Well Diam. (inches)	Depth Limit (feet)	Can it be Dedicated?	Materials	Reduce Flow to 100ml/m?	Acceptable for: VOC	Acceptable for: pH Sensitive	Advantages	Disadvantages	Manufacturers
Bailer										
Tube with bottom and/or top check valve, suspended by line.	Unlimited	Unlimited	Yes	• PVC • Teflon ® • HDPE • SS	Yes	Yes	Yes	• Simple, inexpensive • Can yield high quality samples if used carefully • No power required • Easily cleaned	• Awkward to use • Can aerate sample if not used carefully • Increases chance of turbid samples • Flow not continuous	Timco: Johnson: Voss:
Small Diameter (2") Electric Submersible Pump										
Electrically driven impeller pump.	2 - 4	400	Yes	• SS / Teflon ®	Yes	Yes	Yes	• Easy to operate • Easy to control • Continuous flow	• High capital cost • Awkward if not dedicated	Grundfos
Large Diameter (4") Electric Submersible Pump										
Electrically driven impeller pump.	>=4	unlimited	Not typically	• SS	No	No	No	• Continuous flow	• May not be compatible with VOC & pressure sensitive parameters	Grundfos
Peristaltic (Suction) Pump										
Elastic tubing that is sequentially squeezed by rollers.	<=2	± 25	Yes, internal elastic tubing & pump tubing	• Teflon ® • HDPE • PP	No	Yes		• Flow rate easily controlled, continuo • Portable • Inexpensive • No pump contact with sample	• Loss of VOC due to reduced pressure • Requires power source • May require priming • Can impede access	Isco, Masterflex

Notes:

SS: Stainless Steel
HDPE: High density polyethylene
VAC: Voltage AC Source
PVC: Polyvinyl Chloride
VOCs: Volatile Organic Compounds
PP: Polyprplene

Attachment D - Purging and Sampling Equipment Matrix

Methods	4 inch wells									2 inch wells									<2 inch wells								
	Water Level < 20'						W.L. > 20'			Water Level < 20'						W.L. > 20'			Water Level < 20'						W.L. > 20'		
	Cs>0.2			Cs<0.2						Cs>0.2			Cs<0.2						Cs>0.2			Cs<0.2					
		Sample			Sample			Sample			Sample			Sample			Sample			Sample			Sample			Sample	
	Purging	VOC/pH	Other	Purging	VOC/pH	Other	Purging	VOC/pH	Other	Purging	VOC/pH	Other	Purging	VOC/pH	Other	Purging	VOC/pH	Other	Purging	VOC/pH	Other	Purging	VOC/pH	Other	Purging	VOC/pH	Other
Methods Described in this SOP																											
Bailer	X	X	X	X	X	X	I	X	X	X	X	X	X	X	X	I	X	X	X	X	X	X	X	X	X	X	X
2" Electric Submersible Pump	X	X	X	X	X	X	X	X	X	X	X	X	X	X	X	X	X	X									
4" Electric Submersible Pump	X	O	X	X	O	X	X	O	X																		
Peristaltic Pump	X	O	X							X	O	X							X	O	X						
Other Methods To Consider																											
Bladder Pump	X	X	X	X	X	X	I	X	X	X	X	X	X	X	X	X	X	X									
Gas Driven Piston Pump	X	X	X	X	X	X	I	X	X	X	X	X	X	X	X	X	X	X									
Centrifugal Pump	X									X									X								
Syringe Sampler		X	X		X	X		X	X		X	X		X	X		X	X									
Inertial Lift Pump	X	O	X	X	O	X	I	O	X	X	O	X	X	O	X	X	O	X	X	O	X	X	O	X	X	O	X

Notes: W.L. - Water Level
Cs - Specific Capacity (gallons per foot of drawdown)
VOC - Volatile Organic Compounds
X - Recommended method.
O - Conditionally acceptable Method, based upon technical concerns.
I - Inefficient method but technically acceptable.
- Not recommended or not feasible.

GROUNDWATER PURGE AND SAMPLING FIELD DATA SHEET

1. PROJECT INFORMATION

WELL ID: _____

Project Number:_____ Task Number:_____ Date:_____ Time:_____

Client:_____ Personnel:_____

Project Location:_____ Weather:_____

2. WELL DATA

Casing Diameter:_____ inches | Type of Casing: _____

Screen Diameter:_____ inches (d) | Type of Screen:_____ Screen Length : _____

Total Depth of Well from TOC:_____ feet

Depth to Static Water from TOC:_____ feet

Depth to Product from TOC:_____ feet

Length of Water Column (h):_____ feet Calculated Casing Volume:_____ gal (3 to 5 times one well volume)

Purge Volume Calculation (one casing volume = $0.041d^2h$):

Note: 2-inch well = 0.167 gal/ft 4-inch well = 0.667 gal/ft

3. PURGE DATA

Equipment Model(s)

Purge Method: _____

Materials: Pump/Bailer _____ 1. _____

Materials: Rope/Tubing _____ 2. _____

Was well purged dry? ❑ Yes ❑ No Pumping Rate: gal/min

Time	Cum. Gallons Removed	pH	Temp (Units)	Spec. Cond. (Units)	Eh (Units)	DO (Units)	Turbidity (NTU)	Other: _____	Comments	

4. SAMPLING DATA

Method(s): _____

Materials: Pump/Bailer _____

Materials: Tubing/Rope _____

Depth to Water at Time of Sampling:_____ Field Filtered? ❑ Yes ❑ No

Sample ID:_____ Sample Time:_____ # of Containers:_____

Duplicate Sample Collected? ❑ Yes ❑ No ID:_____

Analyses Requested:

5. COMMENTS

_____

Designation: D 1586 – 08a

Standard Test Method for Standard Penetration Test (SPT) and Split-Barrel Sampling of Soils[1]

This standard is issued under the fixed designation D 1586; the number immediately following the designation indicates the year of original adoption or, in the case of revision, the year of last revision. A number in parentheses indicates the year of last reapproval. A superscript epsilon (ε) indicates an editorial change since the last revision or reapproval.

This standard has been approved for use by agencies of the Department of Defense.

1. Scope*

1.1 This test method describes the procedure, generally known as the Standard Penetration Test (SPT), for driving a split-barrel sampler to obtain a representative disturbed soil sample for identification purposes, and measure the resistance of the soil to penetration of the sampler. Another method (Test Method D 3550) to drive a split-barrel sampler to obtain a representative soil sample is available but the hammer energy is not standardized.

1.2 Practice D 6066 gives a guide to determining the normalized penetration resistance of sands for energy adjustments of N-value to a constant energy level for evaluating liquefaction potential.

1.3 Test results and identification information are used to estimate subsurface conditions for foundation design.

1.4 Penetration resistance testing is typically performed at 5-foot depth intervals or when a significant change of materials is observed during drilling, unless otherwise specified.

1.5 This test method is limited to use in nonlithified soils and soils whose maximum particle size is approximately less than one-half of the sampler diameter.

1.6 This test method involves use of rotary drilling equipment (Guide D 5783, Practice D 6151). Other drilling and sampling procedures (Guide D 6286, Guide D 6169) are available and may be more appropriate. Considerations for hand driving or shallow sampling without boreholes are not addressed. Subsurface investigations should be recorded in accordance with Practice D 5434. Samples should be preserved and transported in accordance with Practice D 4220 using Group B. Soil samples should be identified by group name and symbol in accordance with Practice D 2488.

1.7 All observed and calculated values shall conform to the guidelines for significant digits and rounding established in Practice D 6026, unless superseded by this test method.

1.8 The values stated in inch-pound units are to be regarded as standard, except as noted below. The values given in parentheses are mathematical conversions to SI units, which are provided for information only and are not considered standard.

1.8.1 The gravitational system of inch-pound units is used when dealing with inch-pound units. In this system, the pound (lbf) represents a unit of force (weight), while the unit for mass is slugs.

1.9 Penetration resistance measurements often will involve safety planning, administration, and documentation. This test method does not purport to address all aspects of exploration and site safety. *This standard does not purport to address all of the safety concerns, if any, associated with its use. It is the responsibility of the user of this standard to establish appropriate safety and health practices and determine the applicability of regulatory limitations prior to use.* Performance of the test usually involves use of a drill rig; therefore, safety requirements as outlined in applicable safety standards (for example, OSHA regulations,[2] NDA Drilling Safety Guide,[3] drilling safety manuals, and other applicable state and local regulations) must be observed.

2. Referenced Documents

2.1 *ASTM Standards:* [4]

D 653 Terminology Relating to Soil, Rock, and Contained Fluids

D 854 Test Methods for Specific Gravity of Soil Solids by Water Pycnometer

D 1587 Practice for Thin-Walled Tube Sampling of Soils for Geotechnical Purposes

D 2216 Test Methods for Laboratory Determination of Water (Moisture) Content of Soil and Rock by Mass

D 2487 Practice for Classification of Soils for Engineering Purposes (Unified Soil Classification System)

D 2488 Practice for Description and Identification of Soils

[1] This method is under the jurisdiction of ASTM Committee D18 on Soil and Rock and is the direct responsibility of Subcommittee D18.02 on Sampling and Related Field Testing for Soil Evaluations.

Current edition approved Oct. 1, 2008. Published October 2008. Originally approved in 1958. Last previous edition approved in 2008 as D 1586 – 08.

[2] Available from Occupational Safety and Health Administration (OSHA), 200 Constitution Ave., NW, Washington, DC 20210, http://www.osha.gov.

[3] Available from the National Drilling Association, 3511 Center Rd., Suite 8, Brunswick, OH 44212, http://www.nda4u.com.

[4] For referenced ASTM standards, visit the ASTM website, www.astm.org, or contact ASTM Customer Service at service@astm.org. For *Annual Book of ASTM Standards* volume information, refer to the standard's Document Summary page on the ASTM website.

*A Summary of Changes section appears at the end of this standard.

Copyright © ASTM International, 100 Barr Harbor Drive, PO Box C700, West Conshohocken, PA 19428-2959, United States.

(Visual-Manual Procedure)

D 3550 Practice for Thick Wall, Ring-Lined, Split Barrel, Drive Sampling of Soils

D 3740 Practice for Minimum Requirements for Agencies Engaged in Testing and/or Inspection of Soil and Rock as Used in Engineering Design and Construction

D 4220 Practices for Preserving and Transporting Soil Samples

D 4633 Test Method for Energy Measurement for Dynamic Penetrometers

D 5434 Guide for Field Logging of Subsurface Explorations of Soil and Rock

D 5783 Guide for Use of Direct Rotary Drilling with Water-Based Drilling Fluid for Geoenvironmental Exploration and the Installation of Subsurface Water-Quality Monitoring Devices

D 6026 Practice for Using Significant Digits in Geotechnical Data

D 6066 Practice for Determining the Normalized Penetration Resistance of Sands for Evaluation of Liquefaction Potential

D 6151 Practice for Using Hollow-Stem Augers for Geotechnical Exploration and Soil Sampling

D 6169 Guide for Selection of Soil and Rock Sampling Devices Used With Drill Rigs for Environmental Investigations

D 6286 Guide for Selection of Drilling Methods for Environmental Site Characterization

D 6913 Test Methods for Particle-Size Distribution (Gradation) of Soils Using Sieve Analysis

3. Terminology

3.1 *Definitions:* Definitions of terms included in Terminology D 653 specific to this practice are:

3.1.1 *cathead*, *n*—the rotating drum or windlass in the rope-cathead lift system around which the operator wraps a rope to lift and drop the hammer by successively tightening and loosening the rope turns around the drum.

3.1.2 *drill rods*, *n*—rods used to transmit downward force and torque to the drill bit while drilling a borehole.

3.1.3 *N-value*, *n*—the blow count representation of the penetration resistance of the soil. The *N*-value, reported in blows per foot, equals the sum of the number of blows (*N*) required to drive the sampler over the depth interval of 6 to 18 in. (150 to 450 mm) (see 7.3).

3.1.4 *Standard Penetration Test (SPT)*, *n*—a test process in the bottom of the borehole where a split-barrel sampler having an inside diameter of either 1-1/2-in. (38.1 mm) or 1-3/8-in. (34.9 mm) (see Note 2) is driven a given distance of 1.0 ft (0.30 m) after a seating interval of 0.5 ft (0.15 m) using a hammer weighing approximately 140-lbf (623-N) falling 30 ± 1.0 in. (0.76 m ± 0.030 m) for each hammer blow.

3.2 *Definitions of Terms Specific to This Standard:*

3.2.1 *anvil*, *n*—that portion of the drive-weight assembly which the hammer strikes and through which the hammer energy passes into the drill rods.

3.2.2 *drive weight assembly*, *n*—an assembly that consists of the hammer, anvil, hammer fall guide system, drill rod attachment system, and any hammer drop system hoisting attachments.

3.2.3 *hammer*, *n*—that portion of the drive-weight assembly consisting of the 140 ± 2 lbf (623 ± 9 N) impact weight which is successively lifted and dropped to provide the energy that accomplishes the sampling and penetration.

3.2.4 *hammer drop system*, *n*—that portion of the drive-weight assembly by which the operator or automatic system accomplishes the lifting and dropping of the hammer to produce the blow.

3.2.5 *hammer fall guide*, *n*—that part of the drive-weight assembly used to guide the fall of the hammer.

3.2.6 *number of rope turns*, *n*—the total contact angle between the rope and the cathead at the beginning of the operator's rope slackening to drop the hammer, divided by 360° (see Fig. 1).

3.2.7 *sampling rods*, *n*—rods that connect the drive-weight assembly to the sampler. Drill rods are often used for this purpose.

4. Significance and Use

4.1 This test method provides a disturbed soil sample for moisture content determination, for identification and classification (Practices D 2487 and D 2488) purposes, and for laboratory tests appropriate for soil obtained from a sampler that will produce large shear strain disturbance in the sample such as Test Methods D 854, D 2216, and D 6913. Soil deposits containing gravels, cobbles, or boulders typically result in penetration refusal and damage to the equipment.

4.2 This test method provides a disturbed soil sample for moisture content determination and laboratory identification. Sample quality is generally not suitable for advanced laboratory testing for engineering properties. The process of driving the sampler will cause disturbance of the soil and change the engineering properties. Use of the thin wall tube sampler (Practice D 1587) may result in less disturbance in soft soils. Coring techniques may result in less disturbance than SPT sampling for harder soils, but it is not always the case, that is, some cemented soils may become loosened by water action during coring; see Practice D 6151, and Guide D 6169.

4.3 This test method is used extensively in a great variety of geotechnical exploration projects. Many local correlations and widely published correlations which relate blow count, or *N*-value, and the engineering behavior of earthworks and foundations are available. For evaluating the liquefaction potential of sands during an earthquake event, the *N*-value should be normalized to a standard overburden stress level. Practice D 6066 provides methods to obtain a record of normalized resistance of sands to the penetration of a standard sampler driven by a standard energy. The penetration resistance is adjusted to drill rod energy ratio of 60 % by using a hammer system with either an estimated energy delivery or directly measuring drill rod stress wave energy using Test Method D 4633.

NOTE 1—The reliability of data and interpretations generated by this practice is dependent on the competence of the personnel performing it

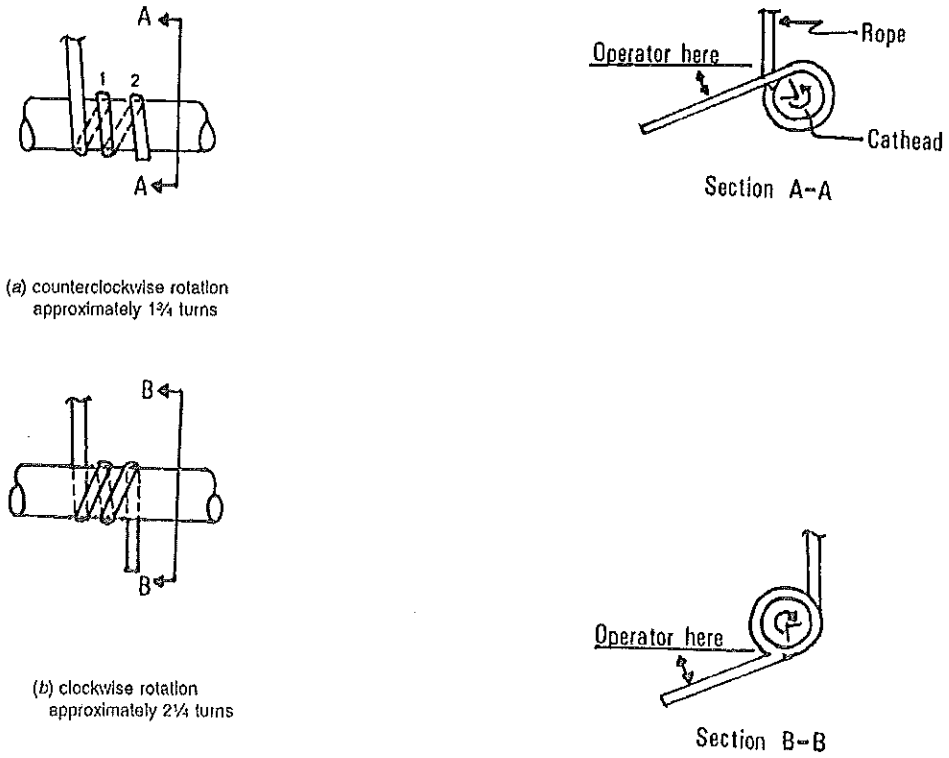

(*a*) counterclockwise rotation approximately 1¾ turns

(*b*) clockwise rotation approximately 2¼ turns

FIG. 1 Definitions of the Number of Rope Turns and the Angle for (*a*) Counterclockwise Rotation and (*b*) Clockwise Rotation of the Cathead

and the suitability of the equipment and facilities used. Agencies that meet the criteria of Practice D 3740 generally are considered capable of competent testing. Users of this practice are cautioned that compliance with Practice D 3740 does not assure reliable testing. Reliable testing depends on several factors and Practice D 3740 provides a means of evaluating some of these factors. Practice D 3740 was developed for agencies engaged in the testing, inspection, or both, of soils and rock. As such, it is not totally applicable to agencies performing this practice. Users of this test method should recognize that the framework of Practice D 3740 is appropriate for evaluating the quality of an agency performing this test method. Currently, there is no known qualifying national authority that inspects agencies that perform this test method.

5. Apparatus

5.1 *Drilling Equipment*—Any drilling equipment that provides at the time of sampling a suitable borehole before insertion of the sampler and ensures that the penetration test is performed on intact soil shall be acceptable. The following pieces of equipment have proven to be suitable for advancing a borehole in some subsurface conditions:

5.1.1 *Drag, Chopping, and Fishtail Bits*, less than 6½ in. (165 mm) and greater than 2¼ in. (57 mm) in diameter may be used in conjunction with open-hole rotary drilling or casing-advancement drilling methods. To avoid disturbance of the underlying soil, bottom discharge bits are not permitted; only side discharge bits are permitted.

5.1.2 *Roller-Cone Bits*, less than 6½ in. (165 mm) and greater than 2¼ in. (57 mm) in diameter may be used in conjunction with open-hole rotary drilling or casing-advancement drilling methods if the drilling fluid discharge is deflected.

5.1.3 *Hollow-Stem Continuous Flight Augers*, with or without a center bit assembly, may be used to drill the borehole. The inside diameter of the hollow-stem augers shall be less than 6½ in. (165 mm) and not less than 2¼ in. (57 mm).

5.1.4 *Solid, Continuous Flight, Bucket and Hand Augers*, less than 6½ in. (165 mm) and not less than 2¼ in. (57 mm) in diameter may be used if the soil on the side of the borehole does not cave onto the sampler or sampling rods during sampling.

5.2 *Sampling Rods*—Flush-joint steel drill rods shall be used to connect the split-barrel sampler to the drive-weight assembly. The sampling rod shall have a stiffness (moment of inertia) equal to or greater than that of parallel wall "A" rod (a steel rod that has an outside diameter of 1-5/8 in. (41.3 mm) and an inside diameter of 1-1/8 in. (28.5 mm).

5.3 *Split-Barrel Sampler*—The standard sampler dimensions are shown in Fig. 2. The sampler has an outside diameter of 2.00 in. (50.8 mm). The inside diameter of the of the split-barrel (dimension D in Fig. 2) can be either 1½-in. (38.1

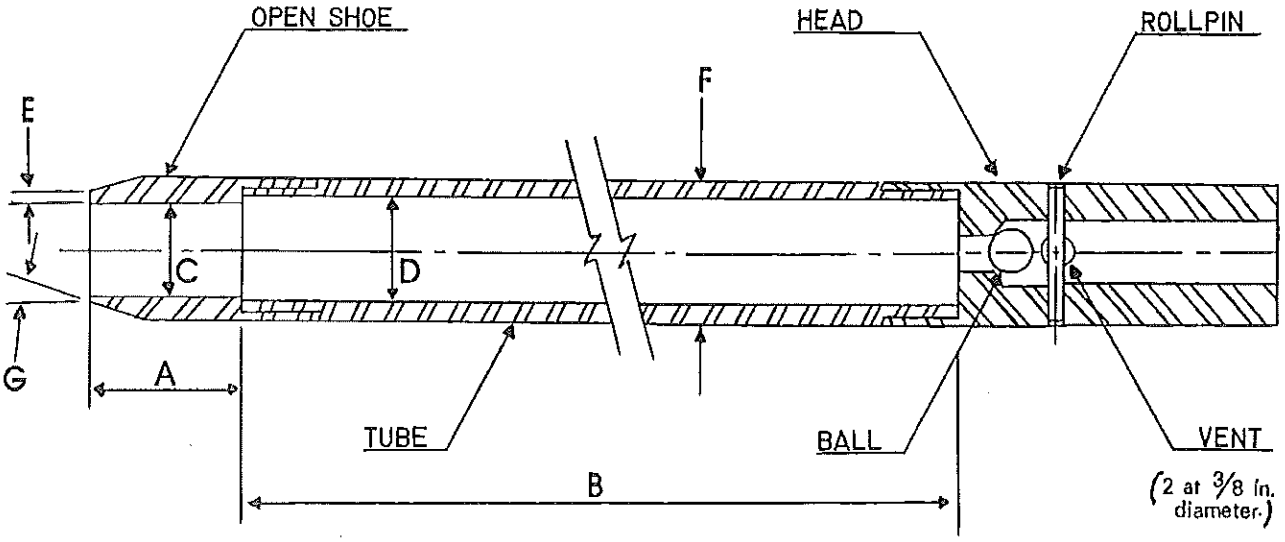

A = 1.0 to 2.0 in. (25 to 50 mm)
B = 18.0 to 30.0 in. (0.457 to 0.762 m)
C = 1.375± 0.005 in. (34.93 ± 0.13 mm)
D = 1.50 ± 0.05 – 0.00 in. (38.1 ± 1.3 – 0.0 mm)
E = 0.10 ± 0.02 in. (2.54 ± 0.25 mm)
F = 2.00 ± 0.05 – 0.00 in. (50.8 ± 1.3 – 0.0 mm)
G = 16.0° to 23.0°

FIG. 2 Split-Barrel Sampler

mm) or 1⅜-in. (34.9 mm) (see Note 2). A 16-gauge liner can be used inside the 1½-in. (38.1 mm) split barrel sampler. The driving shoe shall be of hardened steel and shall be replaced or repaired when it becomes dented or distorted. The penetrating end of the drive shoe may be slightly rounded. The split-barrel sampler must be equipped with a ball check and vent. Metal or plastic baskets may be used to retain soil samples.

NOTE 2—Both theory and available test data suggest that *N*-values may differ as much as 10 to 30 % between a constant inside diameter sampler and upset wall sampler. If it is necessary to correct for the upset wall sampler refer to Practice D 6066. In North America, it is now common practice to use an upset wall sampler with an inside diameter of 1½ in. At one time, liners were used but practice evolved to use the upset wall sampler without liners. Use of an upset wall sampler allows for use of retainers if needed, reduces inside friction, and improves recovery. Many other countries still use a constant ID split-barrel sampler, which was the original standard and still acceptable within this standard.

5.4 *Drive-Weight Assembly*:

5.4.1 *Hammer and Anvil*—The hammer shall weigh 140 ± 2 lbf (623 ± 9 N) and shall be a rigid metallic mass. The hammer shall strike the anvil and make steel on steel contact when it is dropped. A hammer fall guide permitting an unimpeded fall shall be used. Fig. 3 shows a schematic of such hammers. Hammers used with the cathead and rope method shall have an unimpeded over lift capacity of at least 4 in. (100 mm). For safety reasons, the use of a hammer assembly with an internal anvil is encouraged as shown in Fig. 3. The total mass of the hammer assembly bearing on the drill rods should not be more than 250 ± 10 lbm (113 ± 5 kg).

NOTE 3—It is suggested that the hammer fall guide be permanently marked to enable the operator or inspector to judge the hammer drop height.

5.4.2 *Hammer Drop System*—Rope-cathead, trip, semi-automatic or automatic hammer drop systems may be used, providing the lifting apparatus will not cause penetration of the sampler while re-engaging and lifting the hammer.

5.5 *Accessory Equipment*—Accessories such as labels, sample containers, data sheets, and groundwater level measuring devices shall be provided in accordance with the requirements of the project and other ASTM standards.

6. Drilling Procedure

6.1 The borehole shall be advanced incrementally to permit intermittent or continuous sampling. Test intervals and locations are normally stipulated by the project engineer or geologist. Typically, the intervals selected are 5 ft (1.5 m) or less in homogeneous strata with test and sampling locations at every change of strata. Record the depth of drilling to the nearest 0.1 ft (0.030 m).

6.2 Any drilling procedure that provides a suitably clean and stable borehole before insertion of the sampler and assures that the penetration test is performed on essentially intact soil shall be acceptable. Each of the following procedures has proven to be acceptable for some subsurface conditions. The subsurface conditions anticipated should be considered when selecting the drilling method to be used.

6.2.1 Open-hole rotary drilling method.

6.2.2 Continuous flight hollow-stem auger method.

6.2.3 Wash boring method.

6.2.4 Continuous flight solid auger method.

6.3 Several drilling methods produce unacceptable boreholes. The process of jetting through an open tube sampler and then sampling when the desired depth is reached shall not be

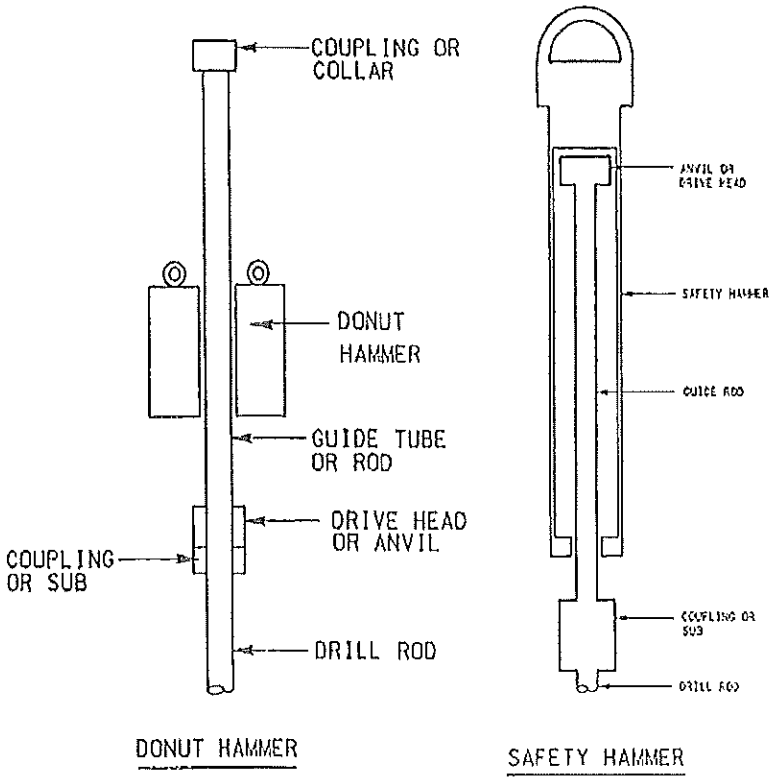

FIG. 3 Schematic Drawing of the Donut Hammer and Safety Hammer

permitted. The continuous flight solid auger method shall not be used for advancing the borehole below a water table or below the upper confining bed of a confined non-cohesive stratum that is under artesian pressure. Casing may not be advanced below the sampling elevation prior to sampling. Advancing a borehole with bottom discharge bits is not permissible. It is not permissible to advance the borehole for subsequent insertion of the sampler solely by means of previous sampling with the SPT sampler.

6.4 The drilling fluid level within the borehole or hollow-stem augers shall be maintained at or above the in situ groundwater level at all times during drilling, removal of drill rods, and sampling.

7. Sampling and Testing Procedure

7.1 After the borehole has been advanced to the desired sampling elevation and excessive cuttings have been removed, record the cleanout depth to the nearest 0.1 ft (0.030 m), and prepare for the test with the following sequence of operations:

7.1.1 Attach either split-barrel sampler Type A or B to the sampling rods and lower into the borehole. Do not allow the sampler to drop onto the soil to be sampled.

7.1.2 Position the hammer above and attach the anvil to the top of the sampling rods. This may be done before the sampling rods and sampler are lowered into the borehole.

7.1.3 Rest the dead weight of the sampler, rods, anvil, and drive weight on the bottom of the borehole. Record the sampling start depth to the nearest 0.1 ft (0.030 m). Compare the sampling start depth to the cleanout depth in 7.1. If excessive cuttings are encountered at the bottom of the borehole, remove the sampler and sampling rods from the borehole and remove the cuttings.

7.1.4 Mark the drill rods in three successive 0.5-foot (0.15 m) increments so that the advance of the sampler under the impact of the hammer can be easily observed for each 0.5-foot (0.15 m) increment.

7.2 Drive the sampler with blows from the 140-lbf (623-N) hammer and count the number of blows applied in each 0.5-foot (0.15-m) increment until one of the following occurs:

7.2.1 A total of 50 blows have been applied during any one of the three 0.5-foot (0.15-m) increments described in 7.1.4.

7.2.2 A total of 100 blows have been applied.

7.2.3 There is no observed advance of the sampler during the application of 10 successive blows of the hammer.

7.2.4 The sampler is advanced the complete 1.5 ft. (0.45 m) without the limiting blow counts occurring as described in 7.2.1, 7.2.2, or 7.2.3.

7.2.5 If the sampler sinks under the weight of the hammer, weight of rods, or both, record the length of travel to the nearest 0.1 ft (0.030 m), and drive the sampler through the remainder of the test interval. If the sampler sinks the complete interval, stop the penetration, remove the sampler and sampling rods from the borehole, and advance the borehole through the very soft or very loose materials to the next desired sampling elevation. Record the *N*-value as either weight of hammer, weight of rods, or both.

7.3 Record the number of blows (*N*) required to advance the sampler each 0.5-foot (0.15 m) of penetration or fraction

thereof. The first 0.5-foot (0.15 m) is considered to be a seating drive. The sum of the number of blows required for the second and third 0.5-foot (0.15 m) of penetration is termed the "standard penetration resistance," or the "*N*-value." If the sampler is driven less than 1.5 ft (0.45 m), as permitted in 7.2.1, 7.2.2, or 7.2.3, the number of blows per each complete 0.5-foot (0.15 m) increment and per each partial increment shall be recorded on the boring log. For partial increments, the depth of penetration shall be reported to the nearest 0.1 ft (0.030 m) in addition to the number of blows. If the sampler advances below the bottom of the borehole under the static weight of the drill rods or the weight of the drill rods plus the static weight of the hammer, this information should be noted on the boring log.

7.4 The raising and dropping of the 140-lbf (623-N) hammer shall be accomplished using either of the following two methods. Energy delivered to the drill rod by either method can be measured according to procedures in Test Method D 4633.

7.4.1 *Method A*—By using a trip, automatic, or semi-automatic hammer drop system that lifts the 140-lbf (623-N) hammer and allows it to drop 30 ± 1.0 in. (0.76 m ± 0.030 m) with limited unimpedence. Drop heights adjustments for automatic and trip hammers should be checked daily and at first indication of variations in performance. Operation of automatic hammers shall be in strict accordance with operations manuals.

7.4.2 *Method B*—By using a cathead to pull a rope attached to the hammer. When the cathead and rope method is used the system and operation shall conform to the following:

7.4.2.1 The cathead shall be essentially free of rust, oil, or grease and have a diameter in the range of 6 to 10 in. (150 to 250 mm).

7.4.2.2 The cathead should be operated at a minimum speed of rotation of 100 RPM.

7.4.2.3 The operator should generally use either 1-3/4 or 2-1/4 rope turns on the cathead, depending upon whether or not the rope comes off the top (1-3/4 turns for counterclockwise rotation) or the bottom (2-1/4 turns for clockwise rotation) of the cathead during the performance of the penetration test, as shown in Fig. 1. It is generally known and accepted that 2-3/4 or more rope turns considerably impedes the fall of the hammer and should not be used to perform the test. The cathead rope should be stiff, relatively dry, clean, and should be replaced when it becomes excessively frayed, oily, limp, or burned.

7.4.2.4 For each hammer blow, a 30 ± 1.0 in. (0.76 m ± 0.030 m) lift and drop shall be employed by the operator. The operation of pulling and throwing the rope shall be performed rhythmically without holding the rope at the top of the stroke.

NOTE 4—If the hammer drop height is something other than 30 ± 1.0 in. (0.76 m ± 0.030 m), then record the new drop height. For soils other than sands, there is no known data or research that relates to adjusting the *N*-value obtained from different drop heights. Test method D 4633 provides information on making energy measurement for variable drop heights and Practice D 6066 provides information on adjustment of *N*-value to a constant energy level (60 % of theoretical, N60). Practice D 6066 allows the hammer drop height to be adjusted to provide 60 % energy.

7.5 Bring the sampler to the surface and open. Record the percent recovery to the nearest 1 % or the length of sample recovered to the nearest 0.01 ft (5 mm). Classify the soil samples recovered as to, in accordance with Practice D 2488, then place one or more representative portions of the sample into sealable moisture-proof containers (jars) without ramming or distorting any apparent stratification. Seal each container to prevent evaporation of soil moisture. Affix labels to the containers bearing job designation, boring number, sample depth, and the blow count per 0.5-foot (0.15-m) increment. Protect the samples against extreme temperature changes. If there is a soil change within the sampler, make a jar for each stratum and note its location in the sampler barrel. Samples should be preserved and transported in accordance with Practice D 4220 using Group B.

8. Data Sheet(s)/Form(s)

8.1 Data obtained in each borehole shall be recorded in accordance with the Subsurface Logging Guide D 5434 as required by the exploration program. An example of a sample data sheet is included in Appendix X1.

8.2 Drilling information shall be recorded in the field and shall include the following:

8.2.1 Name and location of job,

8.2.2 Names of crew,

8.2.3 Type and make of drilling machine,

8.2.4 Weather conditions,

8.2.5 Date and time of start and finish of borehole,

8.2.6 Boring number and location (station and coordinates, if available and applicable),

8.2.7 Surface elevation, if available,

8.2.8 Method of advancing and cleaning the borehole,

8.2.9 Method of keeping borehole open,

8.2.10 Depth of water surface to the nearest 0.1 ft (0.030 m) and drilling depth to the nearest 0.1 ft (0.030 m) at the time of a noted loss of drilling fluid, and time and date when reading or notation was made,

8.2.11 Location of strata changes, to the nearest 0.5 ft (15 cm),

8.2.12 Size of casing, depth of cased portion of borehole to the nearest 0.1 ft (0.030 m),

8.2.13 Equipment and Method A or B of driving sampler,

8.2.14 Sampler length and inside diameter of barrel, and if a sample basket retainer is used,

8.2.15 Size, type, and section length of the sampling rods, and

8.2.16 Remarks.

8.3 Data obtained for each sample shall be recorded in the field and shall include the following:

8.3.1 Top of sample depth to the nearest 0.1 ft (0.030 m) and, if utilized, the sample number,

8.3.2 Description of soil,

8.3.3 Strata changes within sample,

8.3.4 Sampler penetration and recovery lengths to the nearest 0.1 ft (0.030 m), and

8.3.5 Number of blows per 0.5 foot (0.015 m) or partial increment.

9. Precision and Bias

9.1 *Precision*—Test data on precision is not presented due to the nature of this test method. It is either not feasible or too

costly at this time to have ten or more agencies participate in an in situ testing program at a given site.

9.1.1 The Subcommittee 18.02 is seeking additional data from the users of this test method that might be used to make a limited statement on precision. Present knowledge indicates the following:

9.1.1.1 Variations in *N*-values of 100 % or more have been observed when using different standard penetration test apparatus and drillers for adjacent boreholes in the same soil formation. Current opinion, based on field experience, indicates that when using the same apparatus and driller, *N*-values in the same soil can be reproduced with a coefficient of variation of about 10 %.

9.1.1.2 The use of faulty equipment, such as an extremely massive or damaged anvil, a rusty cathead, a low speed cathead, an old, oily rope, or massive or poorly lubricated rope sheaves can significantly contribute to differences in *N*-values obtained between operator-drill rig systems.

9.2 *Bias*—There is no accepted reference value for this test method, therefore, bias cannot be determined.

10. Keywords

10.1 blow count; in-situ test; penetration resistance; soil; split-barrel sampling; standard penetration test

APPENDIX

(Nonmandatory Information)

X1. Example Data Sheet

X1.1 See Fig. 4.

DRILLERS BORING LOG

Project _____ Project No: _____ Boring No _____

Location _____ Sheet _____ of _____

Date Started _____ Date Completed _____

Drill Crew:

Boring Location
Station _____ Offset _____

Elevation

Strata Depth		Soil Description and Remarks	Sample Type	No.	Depth		Recovery	N-Values		
From	To				From	To		6"	6"	6"

Drill Rig Type _____

Method Of Drilling:

Auger _____ Size _____

Wash _____ Water _____ Mud _____

Hammer Type

Auto _____ Manual _____

Split-Spoon Type

Length _____ Liner Used _____

Boring Size _____ Bit Used _____

Casing Size _____ Length _____

Weather _____

Non-Drilling Time (Hrs.)

Boring Layout _____ Moving _____

Hauling Water _____ Standby _____

Water Level @ _____ Date _____ Time _____

@ _____ Date _____ Time _____

@ _____ Date _____ Time _____

Cave-In Depth

@ _____ Date _____ Time _____

FIG. 4 Example Data Sheet

D 1586 – 08a

SUMMARY OF CHANGES

Committee D18 has identified the location of selected changes to this standard since the last issue (D 1586 – 08) that may impact the use of this standard. (Approved October 1, 2008.)

(*1*) Removed previous Figure 4.
(*2*) Replaced "undisturbed" with "intact" in Sections 5.1 and 6.2.

Committee D18 has identified the location of selected changes to this standard since the last issue (D 1586 – 99) that may impact the use of this standard. (Approved February 1, 2008.)

(*1*) There have been numerous changes to this standard to list them separately. From the most recent main ballot process, additional changes were requested and incorporated into this newest revision. Stated below is a highlight of some of the changes.
(*2*) Scope was completely revised.
(*3*) Referenced Documents updated to include new standards.
(*4*) Terminology: added section on Definitions.
(*5*) Significance and Use: clarified use of the SPT test.
(*6*) Apparatus: general editorial changes.
(*7*) Sampling and Testing Procedure: general editorial changes.
(*8*) Data Sheets/Forms: general editorial changes.
(*9*) Precision and Bias: added Sections 9.1.1.1 and 9.1.1.2.

ASTM International takes no position respecting the validity of any patent rights asserted in connection with any item mentioned in this standard. Users of this standard are expressly advised that determination of the validity of any such patent rights, and the risk of infringement of such rights, are entirely their own responsibility.

This standard is subject to revision at any time by the responsible technical committee and must be reviewed every five years and if not revised, either reapproved or withdrawn. Your comments are invited either for revision of this standard or for additional standards and should be addressed to ASTM International Headquarters. Your comments will receive careful consideration at a meeting of the responsible technical committee, which you may attend. If you feel that your comments have not received a fair hearing you should make your views known to the ASTM Committee on Standards, at the address shown below.

This standard is copyrighted by ASTM International, 100 Barr Harbor Drive, PO Box C700, West Conshohocken, PA 19428-2959, United States. Individual reprints (single or multiple copies) of this standard may be obtained by contacting ASTM at the above address or at 610-832-9585 (phone), 610-832-9555 (fax), or service@astm.org (e-mail); or through the ASTM website (www.astm.org).

Designation: D 1587 – 08

Standard Practice for Thin-Walled Tube Sampling of Soils for Geotechnical Purposes[1]

This standard is issued under the fixed designation D 1587; the number immediately following the designation indicates the year of original adoption or, in the case of revision, the year of last revision. A number in parentheses indicates the year of last reapproval. A superscript epsilon (ε) indicates an editorial change since the last revision or reapproval.

This standard has been approved for use by agencies of the Department of Defense.

1. Scope*

1.1 This practice covers a procedure for using a thin-walled metal tube to recover relatively intact soil samples suitable for laboratory tests of engineering properties, such as strength, compressibility, permeability, and density. Thin-walled tubes used in piston, plug, or rotary-type samplers should comply with Section 6.3 of this practice which describes the thin-walled tubes.

NOTE 1—This practice does not apply to liners used within the samplers.

1.2 This Practice is limited to soils that can be penetrated by the thin-walled tube. This sampling method is not recommended for sampling soils containing gravel or larger size soil particles cemented or very hard soils. Other soil samplers may be used for sampling these soil types. Such samplers include driven split barrel samplers and soil coring devices (D 1586, D 3550, and D 6151). For information on appropriate use of other soil samplers refer to D 6169.

1.3 This practice is often used in conjunction with fluid rotary drilling (D 1452, D 5783) or hollow-stem augers (D 6151). Subsurface geotechnical explorations should be reported in accordance with practice (D 5434). This practice discusses some aspects of sample preservation after the sampling event. For information on preservation and transportation process of soil samples, consult Practice D 4220. This practice does not address environmental sampling; consult D 6169 and D 6232 for information on sampling for environmental investigations.

1.4 The values stated in inch-pound units are to be regarded as standard. The values given in parentheses are mathematical conversions to SI units that are provided for information only and are not considered standard.

1.4.1 The tubing tolerances presented in Table 1 are from sources available in North America. Use of metric equivalent is acceptable as long as thickness and proportions are similar to those required in this standard.

1.5 *This standard does not purport to address all of the safety concerns, if any, associated with its use. It is the responsibility of the user of this standard to establish appropriate safety and health practices and determine the applicability of regulatory limitations prior to use.*

1.6 This practice offers a set of instructions for performing one or more specific operations. This document cannot replace education or experience and should be used in conjunction with professional judgment. Not all aspects of this practice may be applicable in all circumstances. This ASTM standard is not intended to represent or replace the standard of care by which the adequacy of a given professional service must be judged, nor should this document be applied without consideration of a project's many unique aspects. The word "Standard" in the title of this document means only that the document has been approved through the ASTM consensus process.

2. Referenced Documents

2.1 *ASTM Standards:*[2]

D 653 Terminology Relating to Soil, Rock, and Contained Fluids

D 1452 Practice for Soil Investigation and Sampling by Auger Borings

D 1586 Test Method for Penetration Test (SPT) and Split-Barrel Sampling of Soils

D 2488 Practice for Description and Identification of Soils (Visual-Manual Procedure)

D 3550 Practice for Thick Wall, Ring-Lined, Split Barrel, Drive Sampling of Soils

D 3740 Practice for Minimum Requirements for Agencies Engaged in Testing and/or Inspection of Soil and Rock as Used in Engineering Design and Construction

D 4220 Practices for Preserving and Transporting Soil Samples

[1] This practice is under the jurisdiction of ASTM Committee D18 on Soil and Rock and is the direct responsibility of Subcommittee D18.02 on Sampling and Related Field Testing for Soil Evaluations.

Current edition approved Oct. 1, 2008. Published October 2008. Originally approved in 1958. Last previous edition approved in 2007 as D 1587 – 00 (2007)$^{\epsilon 1}$.

[2] For referenced ASTM standards, visit the ASTM website, www.astm.org, or contact ASTM Customer Service at service@astm.org. For *Annual Book of ASTM Standards* volume information, refer to the standard's Document Summary page on the ASTM website.

*A Summary of Changes section appears at the end of this standard.

Copyright © ASTM International, 100 Barr Harbor Drive, PO Box C700, West Conshohocken, PA 19428-2959, United States.

TABLE 1 Dimensional Tolerances for Thin-Walled Tubes

Nominal Tube Diameters from Table 2[A] Tolerances						
Size Outside Diameter	2 in.	50.8 mm	3 in.	76.2 mm	5 in.	127 mm
Outside diameter, D_o	+0.007 -0.000	+0.179 -0.000	+0.010 -0.000	+0.254 -0.000	+0.015 -0.000	0.381 -0.000
Inside diameter, D_i	+0.000 -0.007	+0.000 -0.179	+0.000 -0.010	+0.000 -0.254	+0.000 -0.015	+0.000 -0.381
Wall thickness	±0.007	±0.179	±0.010	±0.254	±0.015	±0.381
Ovality	0.015	0.381	0.020	0.508	0.030	0.762
Straightness	0.030/ft	2.50/m	0.030/ft	2.50/m	0.030/ft	2.50/m

[A] Intermediate or larger diameters should be proportional. Specify only two of the first three tolerances; that is, D_o and D_i, or D_o and Wall thickness, or D_i and Wall thickness.

D 5434 Guide for Field Logging of Subsurface Explorations of Soil and Rock

D 5783 Guide for Use of Direct Rotary Drilling with Water-Based Drilling Fluid for Geoenvironmental Exploration and the Installation of Subsurface Water-Quality Monitoring Devices

D 6151 Practice for Using Hollow-Stem Augers for Geotechnical Exploration and Soil Sampling

D 6169 Guide for Selection of Soil and Rock Sampling Devices Used With Drill Rigs for Environmental Investigations

D 6232 Guide for Selection of Sampling Equipment for Waste and Contaminated Media Data Collection Activities

3. Terminology

3.1 *Definitions:*

3.1.1 For common definitions of terms in this standard, refer to Terminology D 653.

3.2 *Definitions of Terms Specific to This Standard:*

3.2.1 *inside clearance ratio, %, n*—the ratio of the difference in the inside diameter of the tube, D_i, minus the inside diameter of the cutting edge, D_e, to the inside diameter of the tube, D_i expressed as a percentage (see Fig. 1).

3.2.2 *ovality, n*—the cross section of the tube that deviates from a perfect circle.

4. Summary of Practice

4.1 A relatively intact sample is obtained by pressing a thin-walled metal tube into the in-situ soil at the bottom of a boring, removing the soil-filled tube, and applying seals to the soil surfaces to prevent soil movement and moisture gain or loss.

5. Significance and Use

5.1 This practice, or Practice D 3550 with thin wall shoe, is used when it is necessary to obtain a relatively intact specimen suitable for laboratory tests of engineering properties or other tests that might be influenced by soil disturbance.

NOTE 2—The quality of the result produced by this standard is dependent on the competence of the personnel performing it, and the suitability of the equipment and facilities used. Agencies that meet the criteria of Practice D 3740 are generally considered capable of competent and objective sampling. Users of this practice, are cautioned that compliance with Practice D 3740 does not in itself assure reliable results. Reliable results depend on many factors; Practice D 3740 provides a means of evaluating some of those factors.

6. Apparatus

6.1 *Drilling Equipment*—When sampling in a boring, any drilling equipment may be used that provides a reasonably clean hole; that minimizes disturbance of the soil to be sampled; and that does not hinder the penetration of the thin-walled sampler. Open borehole diameter and the inside

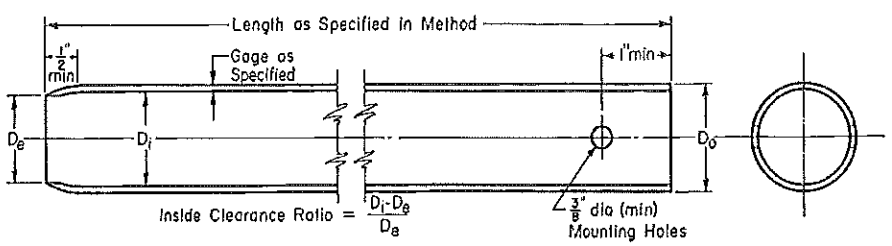

NOTE 1—Minimum of two mounting holes on opposite sides for D_o smaller than 4 in. (101.6 mm).

NOTE 2—Minimum of four mounting holes equally spaced for D_o 4 in. (101.6 mm) and larger.

NOTE 3—Tube held with hardened screws or other suitable means.

NOTE 4—2-in (50.8 mm) outside-diameter tubes are specified with an 18-gauge wall thickness to comply with area ratio criteria accepted for "intact samples." Users are advised that such tubing is difficult to locate and can be extremely expensive in small quantities. Sixteen-gauge tubes are generally readily available.

Metric Equivalent Conversions

in.	mm
⅜	9.53
½	12.7
1	25.4
2	50.8
3	76.2
4	101.6
5	127

FIG. 1 Thin-Walled Tube for Sampling

TABLE 2 Suitable Thin-Walled Steel Sample Tubes[A]

Outside diameter (D_o):			
in.	2	3	5
mm	50.8	76.2	127
Wall thickness:			
Bwg	18	16	11
in.	0.049	0.065	0.120
mm	1.24	1.65	3.05
Tube length:			
in.	36	36	64
m	0.91	0.91	1.45
Inside clearance ratio, %	<1	<1	<1

[A] The three diameters recommended in Table 2 are indicated for purposes of standardization, and are not intended to indicate that sampling tubes of intermediate or larger diameters are not acceptable. Lengths of tubes shown are illustrative. Proper lengths to be determined as suited to field conditions.

diameter of driven casing or hollow stem auger shall not exceed 3.5 times the outside diameter of the thin-walled tube.

6.2 *Sampler Insertion Equipment*, shall be adequate to provide a relatively rapid continuous penetration force. For hard formations it may be necessary, although not recommended, to drive the thin-walled tube sampler.

6.3 *Thin-Walled Tubes*, should be manufactured to the dimensions as shown in Fig. 1. They should have an outside diameter of 2 to 5 in. (50 to 130 mm) and be made of metal having adequate strength for the type of soil to be sampled. Tubes shall be clean and free of all surface irregularities including projecting weld seams. Other diameters may be used but the tube dimensions should be proportional to the tube designs presented here.

6.3.1 *Length of Tubes*—See Table 2 and 7.4.1.

6.3.2 *Tolerances*, shall be within the limits shown in Table 1.

6.3.3 *Inside Clearance Ratio*, should be not greater than 1 % unless specified otherwise for the type of soil to be sampled. Generally, the inside clearance ratio used should increase with the increase in plasticity of the soil being sampled, except for sensitive soils or where local experience indicates otherwise. See 3.2.1 and Fig. 1 for definition of inside clearance ratio.

6.3.4 *Corrosion Protection*—Corrosion, whether from galvanic or chemical reaction, can damage or destroy both the thin-walled tube and the sample. Severity of damage is a function of time as well as interaction between the sample and the tube. Thin-walled tubes should have some form of protective coating, unless the soil is to be extruded less than 3 days. The type of coating to be used may vary depending upon the material to be sampled. Plating of the tubes or alternate base metals may be specified. Galvanized tubes are often used when long term storage is required. Coatings may include a light coat of lubricating oil, lacquer, epoxy, Teflon, zinc oxide, and others.

NOTE 3—Most coating materials are not resistant to scratching by soils that contain sands. Consideration should be given for prompt testing of the sample because chemical reactions between the metal and the soil sample con occur with time.

6.4 *Sampler Head*, serves to couple the thin-walled tube to the insertion equipment and, together with the thin-walled tube, comprises the thin-walled tube sampler. The sampler head shall contain a venting area and suitable check valve with the venting area to the outside equal to or greater than the area through the check valve. In some special cases, a check valve may not be required but venting is required to avoid sample compression. Attachment of the head to the tube shall be concentric and coaxial to assure uniform application of force to the tube by the sampler insertion equipment.

7. Procedure

7.1 Remove loose material from the center of a casing or hollow stem auger as carefully as possible to avoid disturbance of the material to be sampled. If groundwater is encountered, maintain the liquid level in the borehole at or above ground water level during the drilling and sampling operation.

7.2 Bottom discharge bits are not permitted. Side discharge bits may be used, with caution. Jetting through an open-tube sampler to clean out the borehole to sampling elevation is not permitted.

NOTE 4—Roller bits are available in downward-jetting and diffused-jet configurations. Downward-jetting configuration rock bits are not acceptable. Diffuse-jet configurations are generally acceptable.

7.3 Lower the sampling apparatus so that the sample tube's bottom rests on the bottom of the hole and record depth to the bottom of the sample tube to the nearest 0.1-ft (0.03 m).

7.3.1 Keep the sampling apparatus plumb during lowering, thereby preventing the cutting edge of the tube from scraping the wall of the borehole.

7.4 Advance the sampler without rotation by a continuous relatively rapid downward motion and record length of advancement to the nearest 1 in. (25 mm).

7.4.1 Determine the length of advance by the resistance and condition of the soil formation, but the length shall never exceed 5 to 10 diameters of the tube in sands and 10 to 15 diameters of the tube in clays. In no case shall a length of advance be greater than the sample-tube length minus an allowance for the sampler head and a minimum of 3 in. (76 mm) for sludge and end cuttings.

NOTE 5—The mass of sample, laboratory handling capabilities, transportation problems, and commercial availability of tubes will generally limit maximum practical lengths to those shown in Table 2.

7.5 When the soil formation is too hard for push-type insertion, the tube may be driven or Practice D 3550 may be used. If driving methods are used, the data regarding weight and fall of the hammer and penetration achieved must be shown in the report. Additionally, that tube must be prominently labeled a "driven sample."

7.6 Withdraw the sampler from the soil formation as carefully as possible in order to minimize disturbance of the sample. The tube can be slowly rotated to shear the material at the end of the tube, and to relieve water or suction pressures (or both) and improve recovery. Where the soil formation is soft, a delay before withdraw of the sampler (typically 5 to 30 minutes) may improve sample recovery.

8. Sample Measurement, Sealing and Labeling

8.1 Upon removal of the tube, remove the drill cuttings in the upper end of the tube and measure the length of the soil sample recovered to the nearest 0.25 in. (6 mm) in the tube. Seal the upper end of the tube. Remove at least 1 in. (25 mm)

of material from the lower end of the tube. Use this material for soil description in accordance with Practice D 2488. Measure the overall sample length. Seal the lower end of the tube. Alternatively, after measurement, the tube may be sealed without removal of soil from the ends of the tube.

8.1.1 Tubes sealed over the ends, as opposed to those sealed with expanding packers, should be provided with spacers or appropriate packing materials, or both prior to sealing the tube ends to provide proper confinement. Packing materials must be nonabsorbent and must maintain their properties to provide the same degree of sample support with time.

8.1.2 Depending on the requirements of the investigation, field extrusion and packaging of extruded soil samples can be performed. This allows for physical examination and classification of the sample. Samples are extruded in special hydraulic jacks equipped with properly sized platens to extrude the core in a continuous smooth speed. In some cases, further extrusion may cause sample disturbance reducing suitability for testing of engineering properties. In other cases, if damage is not significant, cores can be extruded and preserved for testing (Practice D 4220). Bent or damaged tubes should be cut off before extruding.

8.2 Prepare and immediately affix labels or apply markings as necessary to identify the sample (see Section 9). Assure that the markings or labels are adequate to survive transportation and storage.

NOTE 6—Top end of the tube should be labeled "top."

9. Field Log

9.1 Record the information that may be required for preparing field logs in general accordance to Guide D 5434. This guide is used for logging explorations by drilling and sampling. Some examples of the information required include;

9.1.1 Name and location of the project,

9.1.2 Boring number,

9.1.3 Log of the soil conditions,

9.1.4 Surface elevation or reference to a datum to the nearest foot (0.5 m) or better,

9.1.5 Location of the boring,

9.1.6 Method of making the borehole,

9.1.7 Name of the drilling foreman and company, and

9.1.8 Name of the drilling inspector(s).

9.1.9 Date and time of boring-start and finish,

9.1.10 Depth to groundwater level: date and time measured,

9.2 Recording the appropriate sampling information is required as follows:

9.2.1 Depth to top of sample to the nearest 0.1 ft. (.03 m) and number of sample,

9.2.2 Description of thin-walled tube sampler: size, type of metal, type of coating,

9.2.3 Method of sampler insertion: push or drive,

9.2.4 Method of drilling, size of hole, casing, and drilling fluid used,

9.2.5 Soil description in accordance with Practice D 2488,

9.2.6 Length of sampler advance (push), and

9.2.7 Recovery: length of sample obtained.

10. Keywords

10.1 geologic investigations; intact; sampling; soil exploration; soil investigations; subsurface investigations

SUMMARY OF CHANGES

Committee D18 has identified the location of selected changes to this standard since the last issue (D 1587 – 00 (2007)$^{\epsilon 1}$) that may impact the use of this standard. (Approved October 1, 2008.)

(*1*) Replaced "undisturbed" with "intact" in Sections 1.1, 4.1, 5.1, 10, and Note 4 of Fig. 1.

(2) Editorial changes made in Sections 1.4, 7.3, 7.4.1, 7.6, 8.1, and 8.1.2.

ASTM International takes no position respecting the validity of any patent rights asserted in connection with any item mentioned in this standard. Users of this standard are expressly advised that determination of the validity of any such patent rights, and the risk of infringement of such rights, are entirely their own responsibility.

This standard is subject to revision at any time by the responsible technical committee and must be reviewed every five years and if not revised, either reapproved or withdrawn. Your comments are invited either for revision of this standard or for additional standards and should be addressed to ASTM International Headquarters. Your comments will receive careful consideration at a meeting of the responsible technical committee, which you may attend. If you feel that your comments have not received a fair hearing you should make your views known to the ASTM Committee on Standards, at the address shown below.

This standard is copyrighted by ASTM International, 100 Barr Harbor Drive, PO Box C700, West Conshohocken, PA 19428-2959, United States. Individual reprints (single or multiple copies) of this standard may be obtained by contacting ASTM at the above address or at 610-832-9585 (phone), 610-832-9555 (fax), or service@astm.org (e-mail); or through the ASTM website (www.astm.org).

ATTACHMENT B ODNR WELL ABANDONMENT GUIDANCE

State of Ohio
Technical Guidance
for
Sealing Unused Wells

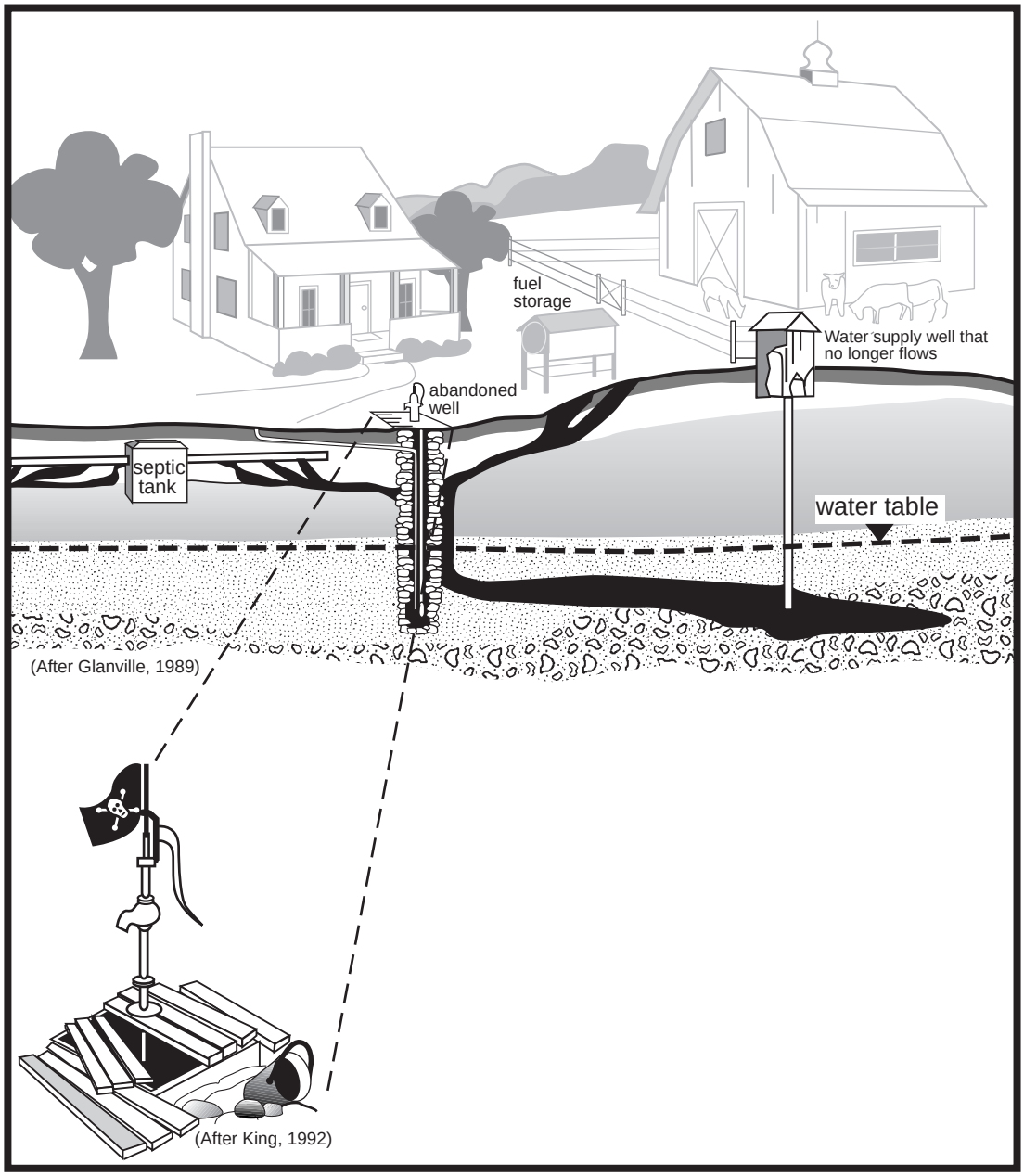

by the

State Coordinating Committee on Ground Water
1996

TECHNICAL GUIDANCE FOR SEALING UNUSED WELLS

BY THE

STATE COORDINATING COMMITTEE ON GROUND WATER

1996

Table of Contents

Table of Contents ii

List of Figures iii

List of Tables iii

Table of Contents continued iii

Preface iv

Acknowledgements v

Introduction 1

Overview of Regulations 1

Reasons to Properly Seal an Unused Well 3
- Eliminate Physical Hazard 3
- Prevent Ground Water Contamination 3
- Prevent Further Loss of Confining Pressure 3
  - Who Should Perform Well Sealing? 5

Types of Wells Defined by Method of Construction 5
- Dug Wells 5
- Driven Wells 5
- Drilled Wells 6
  - Bored 6
  - Cable Tool 7
  - Rotary 7
  - Vibratory 9

Types of Wells Defined by Aquifer Characteristics 9

Preparation for Sealing 12
- Well Information 12
- Casing Issues 12

Sealing Materials 14
- Cement–Based Grouts 14
  - Cement Properties 14
  - Cement Types 16
  - Neat Cement Grout 16
  - Concrete Grout 17
  - Other Cement Additives 17
- Bentonite—Based Grouts 17
  - Clay Properties 17
  - Properties of Bentonite/Water Slurries 17
  - High-Solids Bentonite Grout 18
  - Powdered Bentonite/Clay Grout 19
  - Granular Bentonite Slurries 19
  - Coarse Grade Bentonite 19
  - Pelletized Bentonite 20
  - Availability Of Bentonite Grout Materials 20
- Fill Materials 20

Procedures for Sealing the Well 20
- General Sealing Procedures 20
- Specific Well Sealing Procedures 23
  - Sealing Dug and Bucket-Drilled Wells 23
  - Sealing Driven Wells 24
  - Sealing Wells Drilled Through a Single Unconsolidated Aquifer or an Unconfined, Unconsolidated Aquifer 24
  - Sealing Wells Drilled Through Multiple Unconsolidated Aquifers 25
  - Sealing Wells Drilled Through Confined, Unconsolidated Aquifers 26
  - Sealing Wells Drilled Through Single Consolidated Aquifers 28
  - Sealing Wells Drilled Through Multiple Consolidated Aquifers 28
  - Sealing Wells Drilled Through Fractured or Cavernous Formations 29
  - Sealing Flowing Wells Drilled Through Single or Multiple Consolidated Aquifers 30
  - Sealing Wells of Unknown Construction 30

Table of Contents *continued*

Conclusions 30

References 32

Glossary 34

Appendix 1 37
- Contact Agencies 37

Appendix 2 39
- Cost Considerations 39

Appendix 3 41
- List of Acronyms 41

Appendix 4 42
- Sealing Monitoring Wells and Boreholes 42
  - Sealing Materials 42
  - Procedures 42
  - Planning 42
  - Field Procedure 43

List of Figures

Figure A. Example well sealing report 2
Figure B. Reasons to properly seal an unused well 4
Figure D. Driven well 6
Figure C. Typical dug well design 6
Figure E. Well construction using hollow stem augers 8
Figure F. Cable tool-drilled wells 8
Figure G. Rotary-drilled well with screen, developed in a sand and gravel aquifer 9
Figure H. Generalized map of ground water resources in Ohio 10
Figure I. Confined and unconfined aquifers 11
Figure J. Example well log and drilling report 13
Figure K. Grouting bedrock well using tremie pipe method 22
Figure L. Sealing wells with coarse grade bentonite products using pouring method 23
Figure M. Sealing procedures for dug or other shallow, large diameter wells 24
Figure N. Methods for sealing wells penetrating multiple aquifers 25
Figure O(1). Reducing or stopping flow of well by casing extension 26
Figure O(2). Using inflatable packer to restrict flow 27
Figure O(3). Pouring disinfected gravel into well to reduce flow 28
Figure P. Sealing procedures for wells penetrating fractured or cavernous formations 29

List of Tables

Table 1 Grout Properties 15
Table 2 Permeability of Various Sealing Materials 15
Table 3 Cement Curing Time Required 15
Table 4 Grout Slurry Densities 18
Table 5 Summary of Recommended Well Sealing Procedures 31
Table 6 Table Comparing Volumes of Different Well Sealing Materials Required to Seal a 100 Foot Well 40

Preface

In early 1992, Ohio's State Coordinating Committee on Ground Water identified a list of major issues and problems that they determined should be addressed in some form by the Committee. The issue of the lack of consistent standards and regulations regarding the sealing of abandoned wells and test borings was identified as a major issue of concern by the Committee. The Natural Resource Conservation Service (NRCS, formerly the Soil Conservation Service) approached the Committee in the spring of 1994 regarding a new USDA cost sharing program for sealing abandoned wells that could be implemented by the states. The program required that the states develop technical standards that would be adopted by the state technical committee at the NRCS. Once these technical standards were adopted, counties participating in the cost share program could choose to offer cost share funds to farmers for sealing abandoned wells on agricultural properties. Based on this new opportunity from the NRCS, and due to increasing concerns by many of the participating state agencies and the well drilling industry, the Committee decided to form a workgroup in June, 1994 to develop consistent technical standards for sealing abandoned wells and test borings. Both the Ohio Environmental Protection Agency and the Ohio Department of Health have committed to revising their rules regarding well sealing to be consistent with the resulting new technical guidance document. The Well Sealing Workgroup began meeting in July, 1994; what follows is the product of eighteen months of meetings, research, edits, and revisions.

Throughout this document are references to proprietary materials or products. These references should in no way be interpreted as endorsements for any particular brand name or manufacturer, and are used only for illustrative or comparative purposes.

This guidance does not apply to wells constructed for the purpose of injecting fluids into the subsurface (except as it may augment, not supersede, rule requirements). The authority over injection wells depends on the well classification. For more information contact the Ohio Environmental Protection Agency, Division of Drinking and Ground Waters, Underground Injection Control Unit.

Acknowledgements

The preparation of the Technical Guidance for Sealing Unused Wells involved the contribution and hard work of a number of individuals on the Well Sealing Workgroup of the State Coordinating Committee on Ground Water. The development of the Technical Guidance was supported by the State Coordinating Committee on Ground Water and its member agencies. Special appreciation and acknowledgement is given to Katherine Sprowls for her extensive work in organizing, editing and authoring these guidelines. The workgroup also thanks the many industry professionals who graciously took the time to review and provide comments on the guidelines. In addition, the following are deserving of special thanks for the time and effort they devoted to generating the figures found in the guidelines: Janet Welday of the U. S. Geological Survey, Anne Mischo of the Ohio State University Extension, and Wayne Jones and David Orr of the Ohio Department of Natural Resources. Grateful acknowledgement is given to the following workgroup members for their technical research and text authorship, report editing and preparation:

Well Sealing Workgroup Members

Katherine Sprowls (*Editor*)	Division of Water, Ohio Department of Natural Resources
Rebecca Petty (*Workgroup Chair*)	Division of Water, Ohio Department of Natural Resources
Robert Van Horn	Division of Geological Survey, Ohio Department of Natural Resources
Lisa Koenig	Division of Drinking and Ground Waters, Ohio Environmental Protection Agency
Scott Golden	Bureau of Local Services, Ohio Department of Health
Russell Smith	Bureau of Local Services, Ohio Department of Health
Kevin Hodnett	State Fire Marshal, Ohio Department of Commerce
Larry Berger	Division of Plant Industry, Ohio Department of Agriculture
Denise Dumouchelle	United States Geological Survey
Ken Wolfe	Natural Resource Conservation Service
Hewitt Fredebaugh, Jr.	Fredebaugh Well Drilling
Alan Belasco	Belasco Drilling

State Coordinating Committee on Ground Water Member Agencies

Ohio Environmental Protection Agency

Ohio Department of Natural Resources

Ohio Department of Health

Ohio Department of Agriculture

Ohio Public Utilities Commission

Ohio Department of Development

Ohio Department of Commerce - State Fire Marshal

Ohio Department of Transportation

United States Geological Survey

Natural Resources Conservation Service

—*Rebecca Petty*

Introduction

An unused or abandoned water **well**[1] is a well that is no longer in service or is in such a state of disrepair that continued use for the purposes of accessing **ground water** is unsafe or impracticable. Abandoned wells can be found almost anywhere: on farms, industrial sites, and in urban areas. Those marked by windmill towers and old hand pumps are easy to spot. Many lie hidden beneath weeds and brush. These wells are open traps waiting for unsuspecting children, hunters, and animals (Gordon, 1988). In addition, wells are often abandoned when their **yield** has diminished, or the quality of the water they supply has degraded. Each year, many wells are abandoned when homes are connected to community water supplies. No accurate accounting of abandoned wells exists for the State of Ohio. However, it has been estimated that there could be more than 200,000 unused wells in the state (Golden, pers. comm., 1995).

The number of potential contaminants that may enter these wells is unlimited. Fuel, fertilizer, solvents, sewage, animal waste, pesticides and numerous other contaminants have been introduced into ground water through improperly sealed abandoned wells. If a substance can be dissolved, carried, or mixed in water, it has the potential for entering ground water through an improperly sealed abandoned water well (King, 1992).

This guidance outlines the materials and methodologies that should be used to properly seal a well. The intent of this guidance is to provide a comprehensive discussion of all elements involved in the well sealing process, including basic ground water principles and an introduction to well drilling and construction methods. Readers familiar with these topics can move directly to the sections dealing with well sealing procedures, which start on page 20.

In addition, this guidance covers the procedures for sealing **monitoring wells** and **boreholes**. Readers interested in these procedures are probably already conversant with most of the information presented throughout this document. Therefore, the procedures for sealing monitoring wells and boreholes are addressed separately in Appendix 4.

Any well to be abandoned should be sealed to prevent vertical movement of water. The sealing method chosen should be dependent on both well construction and site **geologic/hydrogeologic conditions**. Whenever there is doubt about either the construction of the well or the site hydrogeology, the choices of sealing material and procedure should be those affording the greatest probability of providing a permanent seal.

Overview of Regulations

Current regulations for private (Ohio Administrative Code (OAC) 3701-28-07) and public water wells (OAC 3745-9-10) require that boreholes not converted into wells, and wells not being used to obtain water or provide information on quality, quantity, and water level, be sealed. However, the regulations specify only that the well/**test boring** be completely filled with **grout** in order to seal the **aquifer** and protect the ground water.

The authority for enforcement for public water supplies is the Ohio Environmental Protection Agency (EPA)/Division of Drinking and Ground Waters (DDAGW) Drinking Water Program and the authority for enforcement for private wells is the Ohio Department of Health (ODH) and local health departments.

Proper sealing of all abandoned wells must be documented per the Ohio Revised Code (ORC) Section 1521.05 (B). A well sealing report (Figure A) must be submitted to the Ohio Department of Natural Resources (ODNR), Division of Water. An appropriate form can be requested from the ODNR (614-265-6739). Also, ODH's Private Water Systems Rules require that the local health department be notified when an abandoned well has been sealed. In most counties, sending the local health department a copy of ODNR's well sealing report is an acceptable form of notification.

---

[1] All terms in bold print can be found in the glossary.

WATER WELL SEALING REPORT
(For Abandoned or Unused Wells)
OHIO DEPARTMENT OF NATURAL RESOURCES
Division of Water, Water Resources Section
1939 Fountain Square Drive
Columbus, Ohio 43224-1360

LOCATION

County DELAWARE Township GENOA Section 4
Property Owner E. J. FUDD
Address of Property 12345 SMOTHERS RD., WESTERVILLE, OH, 43081
Location: 1/2 miles EAST (n, e, s, w) of SUNBURY RD. (nearest intersection)

on the NORTH (n, e, s, w name) side of SMOTHERS ROAD (road)

ORIGINAL WELL

ODNR Well Log Number N/A Copy attached? Yes or No (circle one)

MEASURED CONSTRUCTION DETAILS Date of measurements 8/31/92

Depth of Well 101.5 Static Water Level 14.5
Size of Casing 8 INCH Length of casing ?
Well Condition ABANDONED

SEALING PROCEDURE

Method of Placement PRESSURE GROUT - 1" TREMIE TUBE

Placement:	From	To	Sealing Material	Volume
	101.5	SURFACE	BENSEAL/E-Z MUD	385 GAL

Was Casing Removed? Yes or No (circle one)
Condition of Casing GOOD
Perforations: From To
From To
Date Sealing Performed 8/31/92
Reason(s) for Sealing WELL ABANDONED - NO LONGER NEEDED AND IN THE WAY OF CONSTRUCTION

CONTRACTOR

Name ACME DRILLING COMPANY ODH Registration # 3456
Address 1234 MAIN ST.
City/State/Zip SOCKERDOWNE, OH, 56789 Signature W. E. Coyote

DNR 7810.93 **SUBMIT COMPLETED FORM TO ODNR-DIVISION OF WATER**

Figure A. Example well sealing report

Reasons to Properly Seal an Unused Well

There are many reasons for properly sealing unused wells. The most important of these include: eliminating physical hazards, preventing ground water contamination, and preventing further loss of confining pressure in **confined aquifers**.

Eliminate Physical Hazard

One of the most obvious reasons to properly seal a well is the physical hazard (Figure B). A good example of this danger was seen a few years ago as the nation witnessed the rescue of a small child from an unsealed abandoned water well that was less than 10 inches in diameter. It is also quite common to find animal remains in unsealed abandoned wells. Other than being the reason for the unfortunate creature's demise, an additional hazard is the possible bacterial contamination of the aquifer caused by the decay of the animal. There also have been cases cited where improperly sealed **geotechnical borings**, used to obtain **stratigraphic** information during highway construction, have caused potholes to occur in newly-constructed highways (Smith, 1994). Geotechnical borings are often drilled on farmland that is in the process of being sold for commercial or industrial use. Imagine the consequences if the farmer's prize-winning Guernsey (or other livestock, for that matter) steps into an open borehole and breaks a leg. These are just a few of the hazards that could result from the existence of unsealed abandoned wells of any type.

Prevent Ground Water Contamination

Another reason to properly seal a well is to prevent ground water contamination (Figure B). There are four ways that an unsealed abandoned well could contaminate the ground water: by intermixing of waters between aquifers, by surface water entering the aquifer, by direct disposal of contaminants down the well, and by bacterial contamination from decomposition of animal bodies and waste products.

Poorly constructed wells or wells that are screened across multiple aquifers can cause intermixing of water between the aquifers. Depending upon the hydrogeologic conditions, poor quality water can move upward or downward into a pristine aquifer. Ground water zones penetrated by a well may have physical or chemical qualities that are incompatible. Chemical reactions may occur that result in undesirable products such as iron sulfides and calcium sulfate (Smith, 1994).

Contaminated surface water can enter a well if the well cap has been broken or removed, or if there are holes in the well **casing** due to damage or deterioration with age. In addition, contaminated surface water can seep down along the space (called the **annular space**) between the casing and the borehole wall of an improperly grouted well. This is an important consideration because most older water wells do not meet today's construction standards.

Illegal direct disposal of contaminants down unused wells is a common occurrence. Open wells offer tempting disposal receptacles for liquid and solid waste. People seem naturally compelled to throw or pour unwanted material down an open hole (Smith, 1994).

Abandoned wells are often preferred havens for a host of arthropods (spiders, earwigs, and centipedes) that prefer dark, moist, calm places. Also these can become subsurface dwellings for rodents and reptiles. The bodies and waste products of these colonists add nutrients and undesirable bacteria to the ground water (Smith, 1994).

Prevent Further Loss of Confining Pressure

It is important to seal a well penetrating a confined aquifer(s) to preserve the confined (or "pressurized") conditions (Figure B). These confining conditions allow the water to reach a certain level in a well (called the **static level**). The static level will be higher than the depth at which the water is encountered in the aquifer; in some cases, the well will flow because the static level is higher than the ground surface. A reduction in the confining pressure may cause water levels in neighboring wells to drop because the **hydraulic head** is no longer high enough to allow the water in these wells to maintain their original static levels. Reduced confining pressures may result from water in a deeper aquifer moving upward into **formations** containing no water, or into **saturated zones** of lower hydraulic head. In the case of flowing wells, the pressure can be reduced simply because of the constant flow of

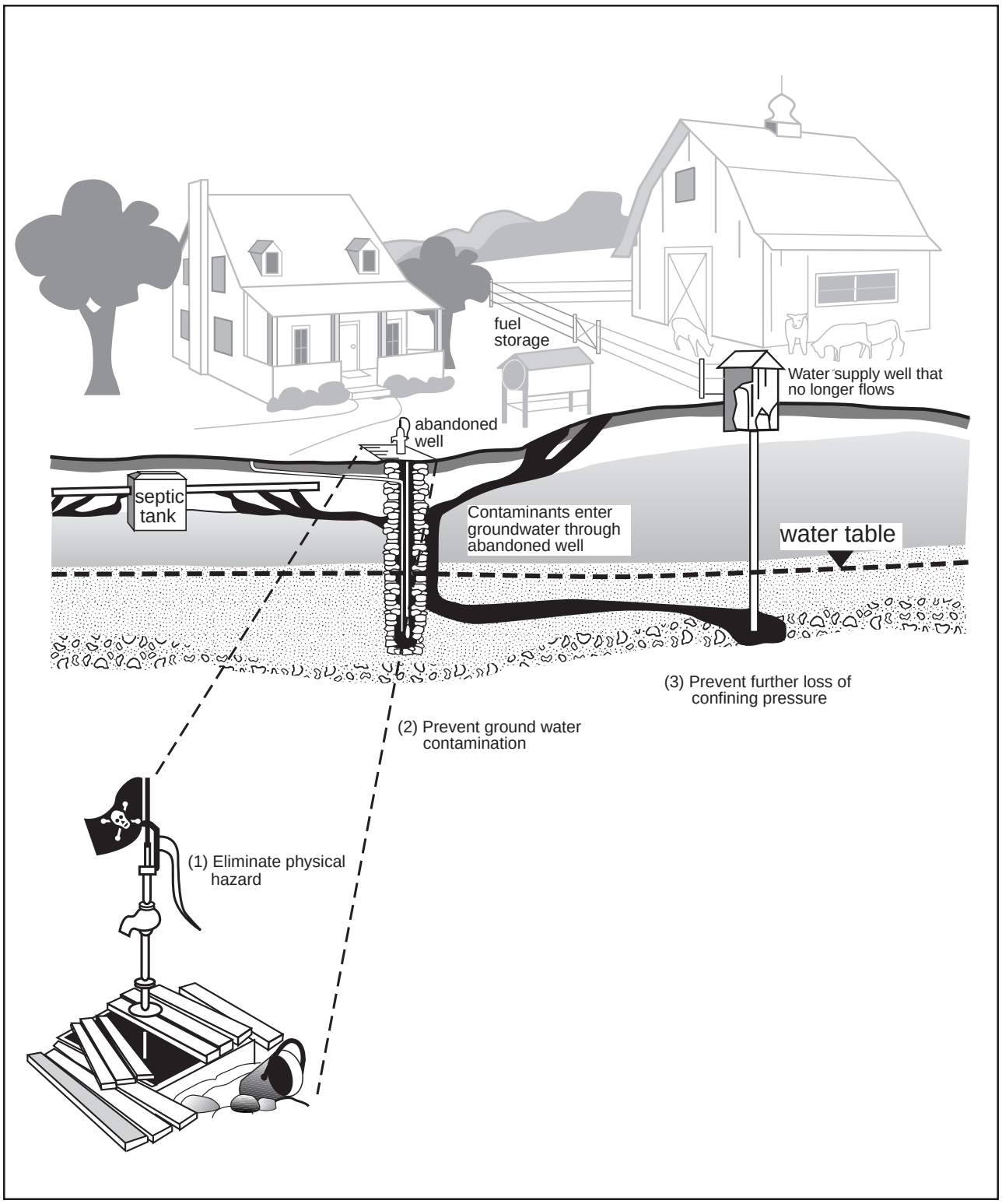

Figure B. Reasons to properly seal an unused well
(After Glanville, 1989, and King, 1992)

water from the aquifer onto the ground surface. Therefore, it is especially important to ensure that abandoned wells penetrating confined aquifers are properly sealed.

Who Should Perform Well Sealing?

It may seem that anyone who can rip open a bag of grout and pour it down the hole could seal a well. However, effective well sealing requires skill and cannot be done carelessly. A sealed-in leaking shaft or hole will most likely result if too little grout is emplaced, or it is mixed improperly, or seals are not set at the right depths, or annulus openings are left outside the casing. The consequence is continued threats to other wells and direct pathways to the ground water (Smith, 1994).

There are no qualifications specified in regulation for persons who can perform well sealing. Based on the difficulty in sealing many wells, and the equipment and knowledge involved, it is strongly recommended that well sealing be completed by an experienced registered drilling contractor. Some work may also need to be supervised by a qualified hydrogeologist or qualified engineer. It should be noted that all professional contractors do not have the same experience. An experienced contractor should be able to provide a description of work to be performed and a list of references proving his/her qualifications. Personnel should be trained and equipped for sites with potential for exposure to contamination or other hazards (Smith, 1994).

In some instances, shallow large diameter **dug wells** can be successfully sealed by a non-professional with minimal amount of special equipment. Be aware, however, that once a well has been sealed improperly, it is costly to correct because the defective seal has to be drilled out. An experienced registered drilling contractor should be consulted, at a minimum, in all sealing situations. It is recommended that wells with one or more of the following characteristics be sealed by an experienced registered drilling contractor only:

- drilled wells,
- flowing wells,
- wells greater than 100 feet in depth,
- wells where water is seeping from around the casing,
- wells where pumping equipment is difficult to remove,
- wells which produce gas, and
- monitoring wells (Zahniser and Gaber, 1993).

Types of Wells Defined by Method of Construction

Wells can be described in different ways, either by their method of construction, or by the type of aquifer in which they are developed. To describe wells by their method of construction, it is necessary to understand what it takes to “make a well.” There are three commonly used methods of well construction: digging (by hand or backhoe), driving, and drilling.

Dug Wells

Dug wells can be defined as any wells not installed by drilling rigs. They are usually large diameter (greater than 24 inches) and fairly shallow (25 feet or less, although dug wells deeper than 25 feet are not uncommon), and are constructed by digging with a backhoe or by hand (Figure C). Casing installed in dug wells can vary from concrete pipe and vitrified tile to cobbles and bricks. In some cases, dug wells are improperly used as **cisterns** for roof runoff or hauled water.

Driven Wells

Driven wells, for the purposes of this document, will refer to well points exclusively (Figure D). Well points are installed only in **unconsolidated** formations. Well points are typically small diameter, shallow wells used to supply water for a single household. Many of these wells are installed by the homeowners themselves. Well points consist of a **well screen** with a hardened point which is hammered into place (by hand or machine) using a large weight. Sections of pipe are added to the screen in order to advance the screen to the desired depth.

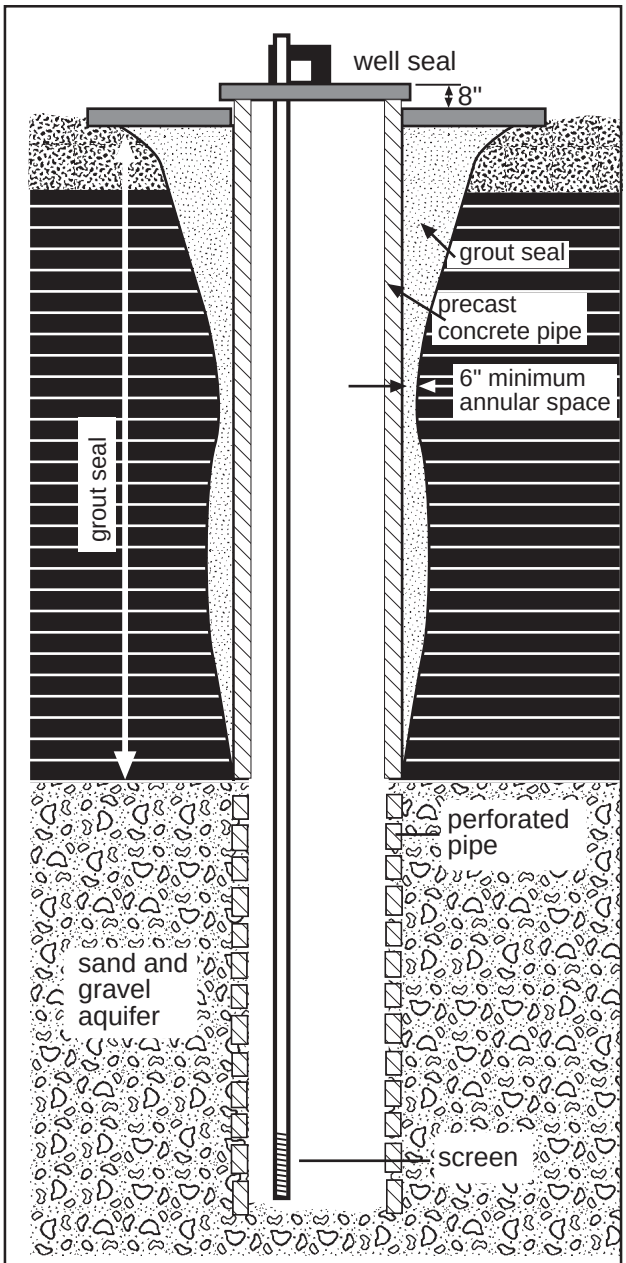

Figure C. Typical dug well design
(After Midwest Plan Service, 1979)

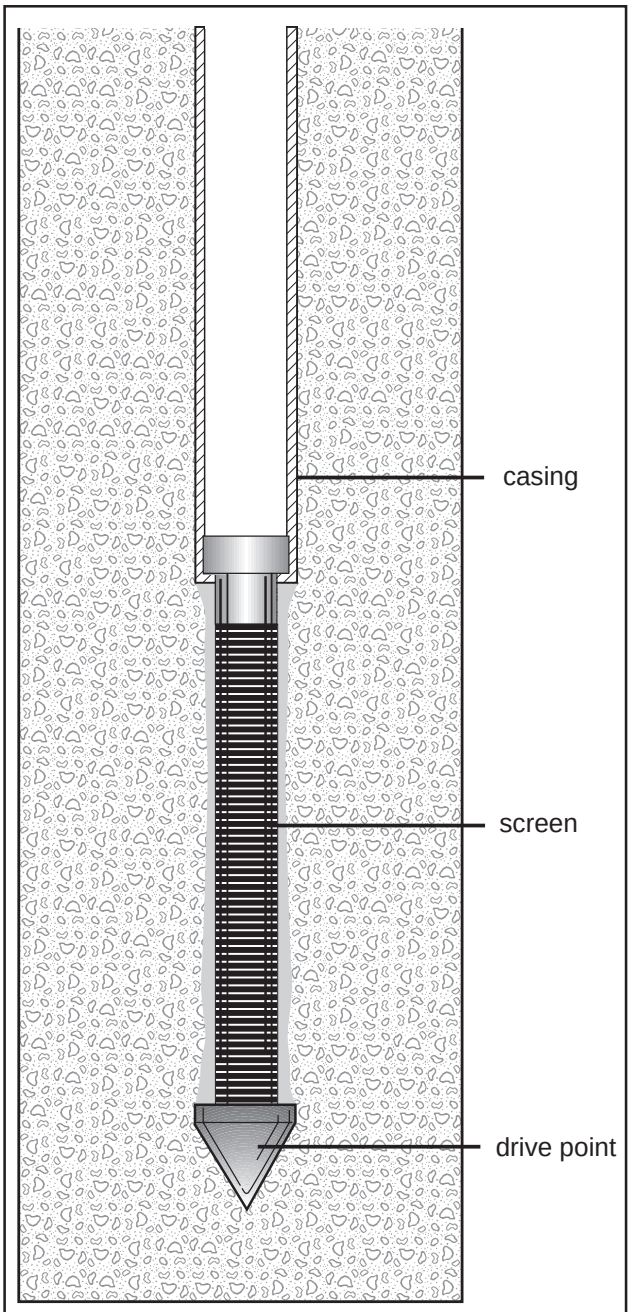

Figure D. Driven well

Drilled Wells

The third major category of well construction methods is that of drilled wells. Drilled wells are those that are constructed using machines designed specifically for the task of well installation. There are several drilling methods commonly used today: boring, cable tool, rotary, and vibratory drilling.

Bored

Bored wells are also known as augered wells and are used to construct wells in unconsolidated formations. There are three principal types of augers used for well drilling: bucket augers, solid-stem augers, and hollow-stem augers. The bucket auger has the largest diameter of the three types of augers, and is the most frequently used augering technique for water supply wells in Ohio. The bucket is cylindrical with hardened teeth on the bottom and has a diameter of 18" to 48". The bucket can remove 24" to 48" of material at a time. Wells drilled with a bucket auger normally range in depth from 50 to 150 feet, but in some areas they can reach 250 feet in depth (Driscoll, 1986). In Ohio, a

bucket-augered well generally is cased with concrete pipe or vitrified tile, and in many respects will resemble a dug well.

Solid-stem augers consist of spiral flanges welded to a pipe. One length of pipe (or auger section) is called a flight; multiple auger sections are often referred to as continuous flighting. The leading auger flight has a special bit or cutter head attached that cuts a hole for the flights to follow. Flights are added as the hole is drilled deeper. **Cuttings** from the drilling process are brought to the surface by the action of the augers (Driscoll, 1986). Boreholes constructed with solid stem augers are typically used for geotechnical, or, less commonly, environmental purposes, rather than water supply wells.

Hollow-stem augers are similar to solid stem augers in design, except that **drill rods** can pass through the auger sections. The leading drill rod has a pilot assembly attached to drill slightly ahead of the lead auger flight (Figure E). The outside diameter of these augers can range from 4 $^1/_4$" to 18", with corresponding inside diameters of 2 $^1/_4$" to 12 $^1/_4$". Because the flights are hollow, they can be used as temporary casing to hold the hole open while the permanent casing is installed. As the well is being installed, the augers are removed. Wells drilled with hollow stem augers have been used to construct water supply wells, but they are more often used to construct monitoring wells.

Cable Tool

Cable tool (sometimes called “spudder”) rigs operate by repeatedly lifting and dropping a string of **drill tools** into the hole (Figure F). The **drill bit** at the bottom of the drill tools breaks or crushes the formation and when mixed with water forms a slurry. After drilling a certain number of feet, the bit and tools are pulled from the hole and the slurry is removed by **bailing**. In unconsolidated formations, casing is driven into the hole behind the drill bit so that the hole will stay open. When the desired depth has been reached, the casing can be pulled back to expose a screen, if one is to be installed. In some cases, drilling a well deep into unconsolidated sediments requires that two strings of casing be used; that is, the driller will start with a particular diameter casing, then when this size casing can no longer be driven, a smaller diameter casing is set inside the larger casing and the drilling and driving process continues until the well is completed. This technique works because the smaller diameter casing has less friction working against it. However, when drilling a well into the bedrock with a cable tool rig, usually a single casing string is set a few feet into the bedrock, and drilling continues open hole until the desired depth is reached. Cable tool drilling is still the most commonly used method of drilling water wells in Ohio. About 79 percent of the drilling contractors operating in the state of Ohio own cable tool rigs.

Rotary

Rotary rigs use one of two methods to rotate the drill bit: a table drive or top head drive. The rotation of the table or top head is transferred to the drill rods, which in turn rotate the bit. Mud rotary rigs use a roller cone bit at the end of the drill rods. The drill cuttings are circulated out of the hole with water or **drilling mud**. When the appropriate depth has been reached, the drill rods are withdrawn from the hole. The casing and screen (if needed) can then be set in the open borehole. Since it is necessary to drill an oversized borehole with this type of drilling method, the outside diameter of the well casing will be at least 2" smaller than the diameter of the borehole. Therefore, it is important that the space between the casing and borehole wall (annular space) be sealed to prevent contamination from the surface, and to hold the casing in place in the borehole.

Air rotary drilling rigs operate in basically the same way as mud rotary. However, instead of using drilling mud to clean the cuttings out of the borehole, a combination of compressed air and water is used. Air rotary rigs also run roller cone bits, but, in addition, they have the capability to run a down-the-hole hammer. The down-the-hole hammer is used for **consolidated** formations only. Compressed air is forced down the drill rods to operate the piston-like action of the hammer (bit). The hammer pulverizes the material being drilled. The air, in combination with water or foam, lifts the cuttings out of the hole. Hole sizes can range from 4 $^1/_8$" to 30" (Ingersoll-Rand Co., 1988). Usually a well will be drilled with mud through unconsolidated formations to the bedrock formation, if that is the aquifer. After the casing is set and grouted into place, the well can continue to be drilled with a combination of air and water until the desired depth is reached. Both methods of rotary drilling are frequently used in Ohio to construct water supply wells. Figure G shows typical rotary-drilled well construction.

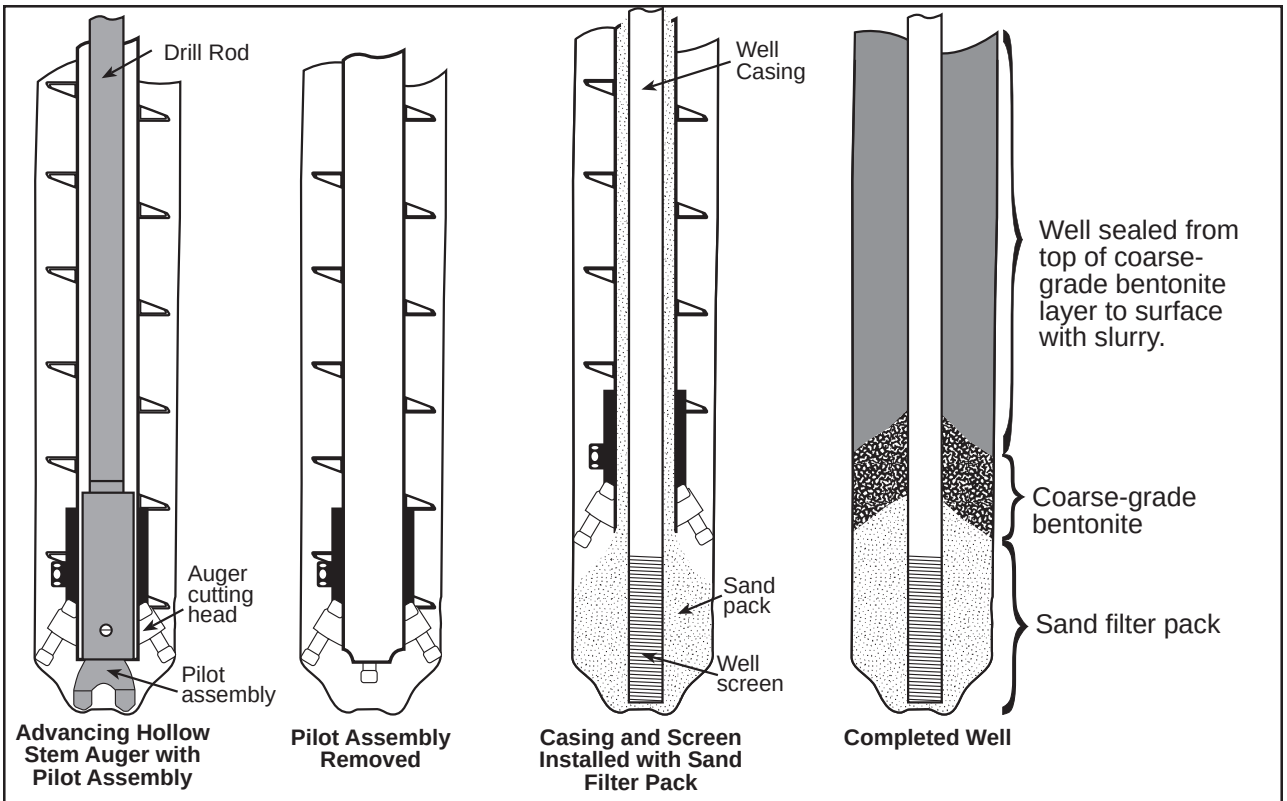

Figure E. Well construction using hollow stem augers
(Modified from Hackett, 1987 and 1988)

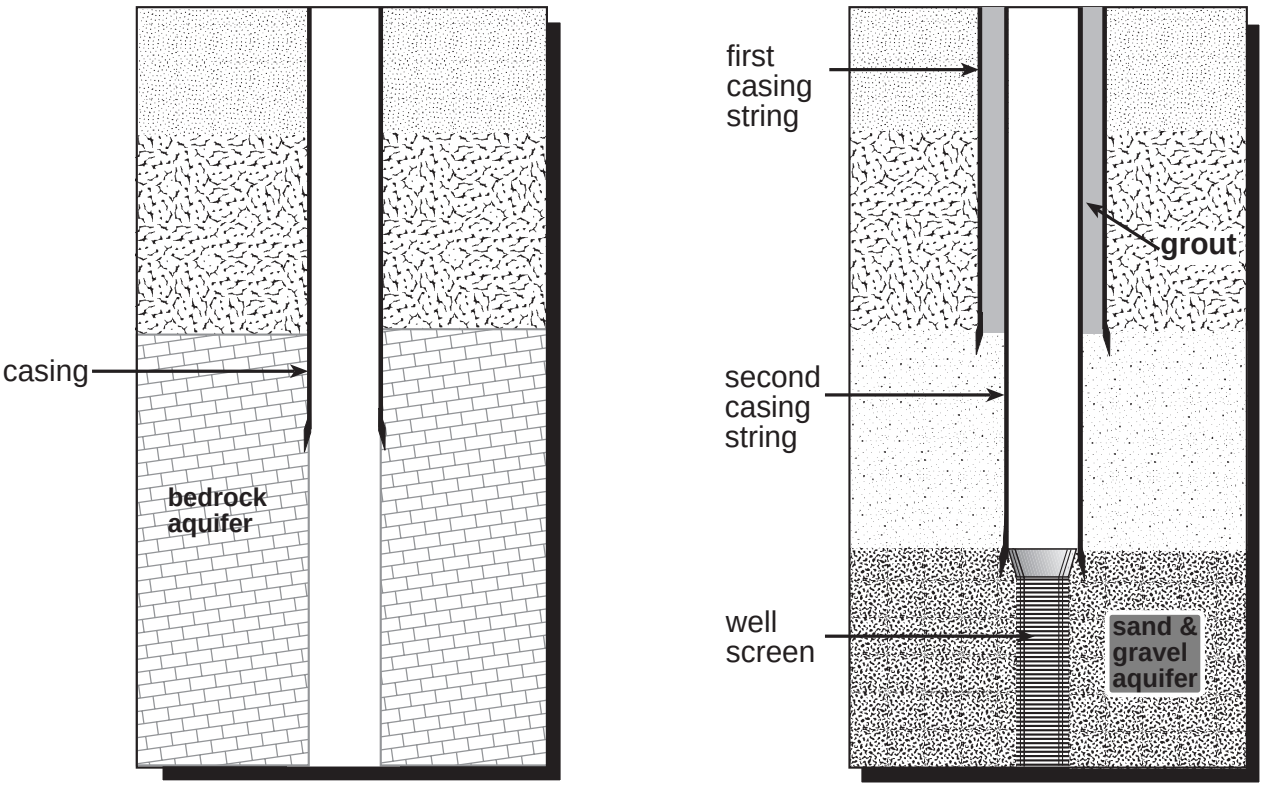

Figure F. Cable tool-drilled wells

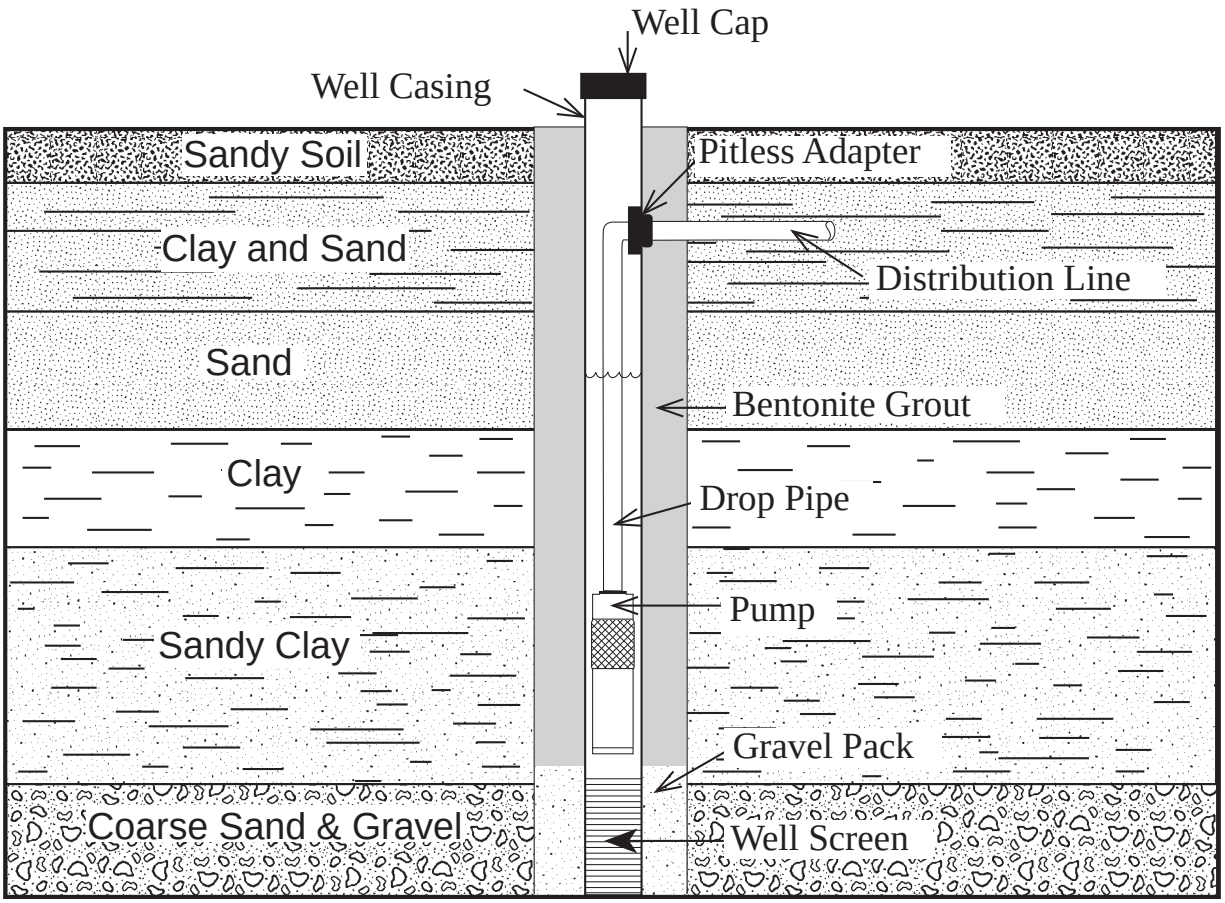

Figure G. Rotary-drilled well with screen, developed in a sand and gravel aquifer

Another method of rotary drilling is reverse rotary. Reverse rotary drilling is most often used to construct large diameter (24 inches or greater) water supply wells. Reverse rotary rigs are similar to air or mud rotaries in design, but are larger in size. The bit is rotated by table drive exclusively, as the top head drive does not develop enough torque to turn the size of the bit required to drill large diameter wells. The major difference between the reverse rotary and the other rotary methods described here is the pattern of fluid circulation. With reverse rotary, the drilling fluid is added to the borehole through the annular space, then the fluid and cuttings are removed from the hole by suction through the drill rods. The fluid and cuttings are deposited into a mud pit, where the cuttings settle out and the fluid is recirculated. The resulting large-diameter borehole allows easy installation of **filter pack** and well screens, which are necessary to properly develop high capacity wells in unconsolidated formations. Reverse rotary drilling can also be used in most consolidated formations (Driscoll, 1986).

Vibratory

Vibratory drilling involves the use of a resonance source through the drill rods to drill a hole to the desired depth. The resonance through the casing (rods in this case) pushes the cuttings into the side wall of the hole and into the center of the pipe. This method produces a minimal amount of cuttings, uses no drilling mud, and produces a continuous core. This drilling method is used mostly for geotechnical and environmental sampling purposes. Monitoring wells can be set through the casing if desired.

Types of Wells Defined by Aquifer Characteristics

Wells can be described by the types of aquifers in which they are developed. An aquifer is a geologic formation, group of formations, or part of a formation that is capable of yielding water to a well or spring. Figure H shows the statewide distribution of expected well yields from aquifers (this map is very general and should not be used to determine well yields on a site-specific basis). These

yields, are directly related to the types of geologic formations that comprise the aquifers. For example, the white areas on the map signify aquifers that typically yield less than five gallons per minute to a well. The aquifers in these areas generally consist of shales, or interbedded limestone and shale, or, in some cases, interbedded shale, limestone, and sandstone.

Geologic formations in Ohio will be either consolidated or unconsolidated. Consolidated formations are those that are lithified, that is, hardened into rock. A borehole penetrating a consolidated formation would be able to stay open indefinitely without the benefit of casing. Consolidated aquifers in Ohio generally consist of sandstone, limestone, or shale. The most productive consolidated aquifer is cavernous limestone. Sealing wells that penetrate fractured and cavernous rock may have special problems due to loss of grouting material.

Unconsolidated formations are usually soft and loose (there are some exceptions). Wells penetrating unconsolidated formations must be cased, otherwise the borehole walls will collapse. Unconsolidated aquifers in Ohio consist of silt, sand, gravel, or any combination of the three. Many of the state's most prolific wells are developed in sand and gravel aquifers.

Consolidated and unconsolidated aquifers can also be confined or unconfined. Unconfined aquifers are aquifers in which there are no **confining beds** between the zone of saturation and the surface (see Figure I for example). They are often referred to as water table aquifers. The upper surface of

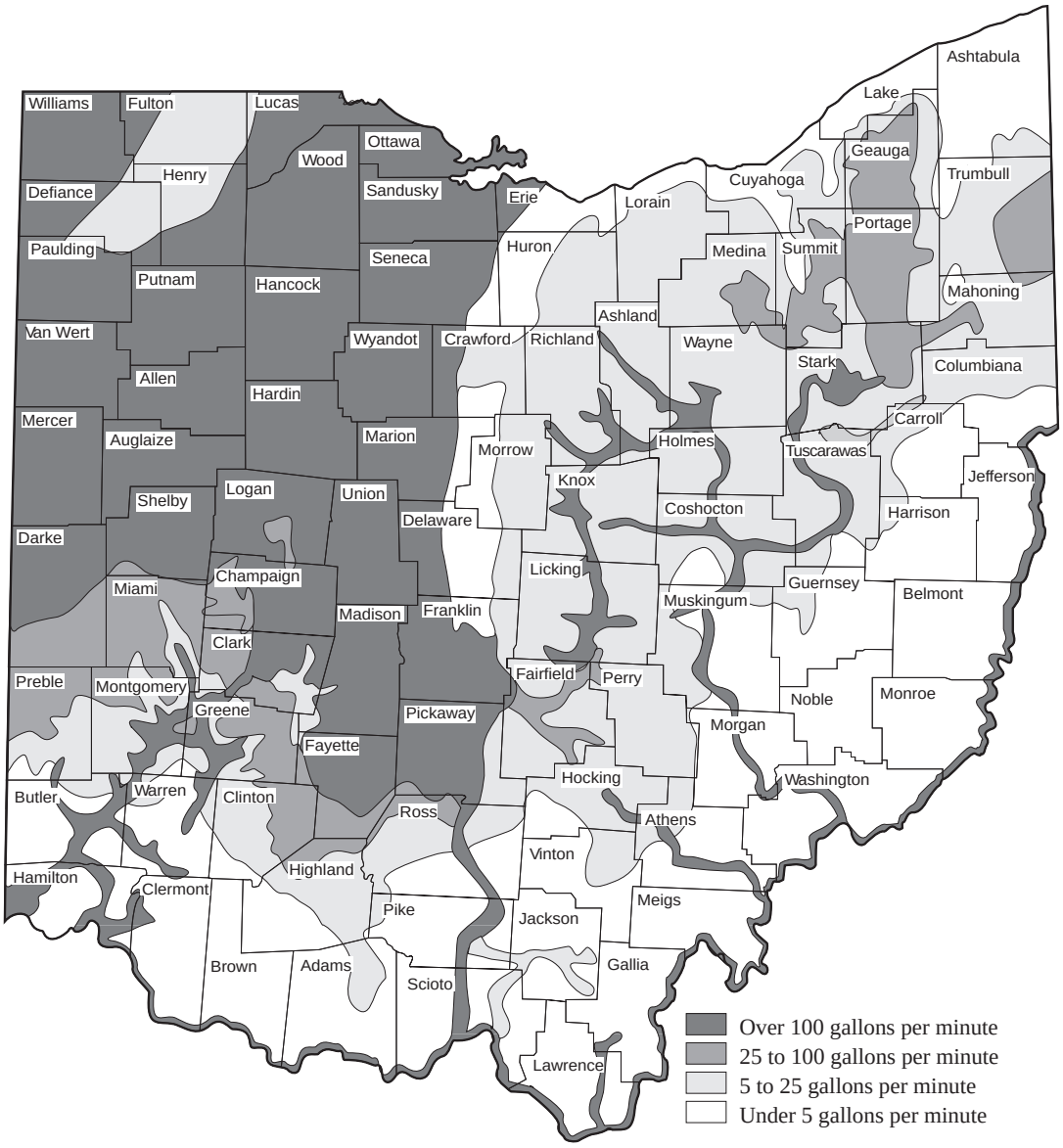

Figure H. Generalized map of ground water resources in Ohio

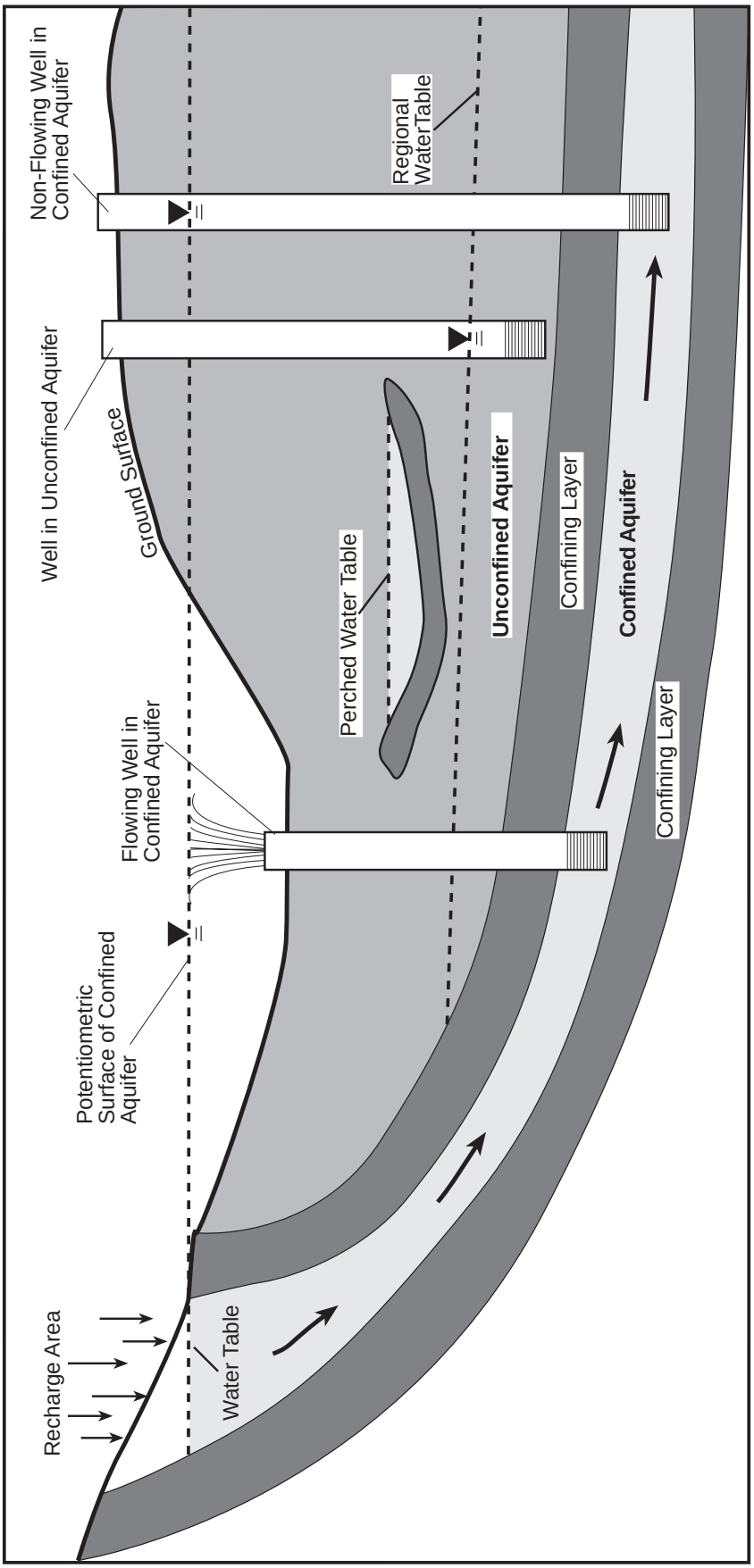

Figure I. Confined and unconfined aquifers
(After U. S. Department of the Interior, 1977)

an unconfined aquifer is in direct contact with the atmosphere through open **pores** of the material above and is everywhere in balance with the hydraulic head in the **recharge** area. Therefore, the static level in a well penetrating an unconfined aquifer will be the same as the level of the water table. Confined aquifers are aquifers that are overlain by a confining bed (see Figure I also). The confining bed has a significantly lower **permeability** than the aquifer. When a confined aquifer is penetrated by a well, the water will rise above the confining unit to an elevation that is equivalent to the hydraulic head of the confined aquifer. If this elevation is greater than the top of the well, the water will flow from the well (commonly called an artesian well). The term artesian well, however, includes any well developed in a confined aquifer where the water level rises above the top of the aquifer, not just those that are flowing.

Wells developed in confined aquifers can present a special problem when it comes time to seal them. Also, wells screened across several aquifers will require more care in sealing. These wells must be sealed in such a manner so that there is no intermixing of water between the aquifers. In addition, careful consideration must be given to choosing an appropriate sealing method for wells screened in a single aquifer but penetrating several aquifers. These scenarios and others will be addressed in the section on **Procedures For Sealing The Well**.

Preparation for Sealing

Well Information

Information concerning the geology and physical condition of the well, such as total depth, formations encountered, and diameter are important in determining the sealing method. Geologic conditions vary throughout the state and different methods of sealing are needed to meet these varying conditions. Well construction details are needed to determine the type and amount of materials needed to seal the well.

The best source of information is the “Well Log and Drilling Report” that is completed by the driller at the time of construction. These logs contain well construction information and a record of formations encountered during well installation. Figure J is an example of a well log. An accurate well log will enable a drilling contractor to select the most appropriate sealing method for that well. Copies of these reports are filed with the Ohio Department of Natural Resources, Division of Water, and, within the last 10 to 15 years, each county health department. To obtain a copy of a well log and drilling report, it is necessary to know the county in which the well was drilled, the township within that county, the street address, the name of the property owner at the time the well was drilled, the names of the nearest cross roads, and the approximate year in which the well was drilled. It may not be possible to discover all of this information, but the Division of Water will do a file search with the information that is available. Occasionally, a well log and drilling report may not be on file, either because the well was drilled before the filing law went into effect (1947) or because, for some reason, the log was not sent to the Division. Call the Division of Water, Water Resources Section at 614-265-6740 to have the files searched for a specific well log and drilling report.

Logs for nearby wells should be reviewed if a well log and drilling report cannot be located. Often, wells on adjacent properties will be of similar depths and construction. If a well is free of obstructions (including old pumps), then the depth may be easily determined with a weighted measuring tape or rope. Local drilling contractors will also be familiar with the general geologic conditions in the area.

Other methods for examining the condition of a well include casing-depth indicators, borehole video cameras, and geophysical logging equipment such as calipers and gamma-ray probes. These tools are commonly used in the maintenance of public supply wells and in scientific investigations. These methods are likely to be expensive, but most wells will not need such detailed investigations. Local drilling contractors should be able to locate firms possessing this equipment, if necessary.

Casing Issues

Well casing is usually constructed of plastic (PVC), steel (in drilled wells), or concrete pipe, vitrified tile, brick, or cobbles (in dug wells). The well screen is a section of wire-wrapped or machine-slotted casing through which water enters the well. In many older wells, it was common

DNR 7802.94

TYPE OR USE PEN
SELF TRANSCRIBING
PRESS HARD

WELL LOG AND DRILLING REPORT

Ohio Department of Natural Resources
Divison of Water, 1939 Fountain Square Drive
Columbus, Ohio 43224 Phone (614) 265-6739

Permit Number WI9500009

COUNTY FRANKLIN TOWNSHIP WASHINGTON SECTION/LOT No. 3 (Circle One)

OWNER/BUILDER (Circle One or Both) R. D. RUNNER (First, Last) PROPERTY ADDRESS (Address of well location) 12345 RINGS ROAD (Number, Street) DUBLIN (City)

LOCATION OF PROPERTY 1/8 MILE EAST OF COSGRAY, NORTH SIDE OF RINGS ROAD Zip Code + 4 43002

CONSTRUCTION DETAILS

CASING *(Length below grade) Borehole Diameter 9 in.

1 Diameter 5 in. Length* 157 ft. Wall Thickness SDR21 in.

2 Diameter ____ in. Length* ____ ft. Wall Thickness ____ in.

Type: 1 Steel 2 / 1 Galv. 2 / [X] PVC 2 / 1 2 Other ____

Joints: 1 Threaded 2 / 1 Welded 2 / [X] Solvent 2 / 1 2 Other ____

Liner: Length ____ Type ____ Wall Thickness ____ in.

SCREEN Type (wire wrapped, louvered, etc.) MACHINE SLOTTED Material PVC

Length 5 ft. Diameter 5 in.

Set between 162 ft. and 157 ft. Slot 0.050

GROUT

Material BENSEAL/E-Z MUD Volume used 280 GALLONS

Method of installation 1" TREMIE TUBE

Depth: placed from 152 ft. to SURFACE ft.

GRAVEL PACK (Filter Pack)

Material #4 PARRY SAND Volume used 500 LBS

Method of installation GRAVITY

Depth: placed from 165 ft. to 152 ft.

Pitless Device [X] Adapter ☐ Preassembled unit

Use of Well RESIDENTIAL

[X] Rotary ☐ Cable ☐ Augered ☐ Driven ☐ Dug ☐ Other ____

Date of Completion 2/17/95

WELL LOG*

INDICATE DEPTH(S) AT WHICH WATER IS ENCOUNTERED.

Show color, texture, hardness, and formation: sandstone, shale, limestone, gravel, clay, sand, etc.	From	To
YELLOW BROWN CLAY	0	11
GRAY CLAY & GRAVEL	11	63.5
SAND & GRAVEL	63.5	65.5
GRAY SILTY CLAY	65.5	89
SAND WITH GRAVEL	89	92
GRAY CLAY & GRAVEL	92	144
SAND	144	150
SAND & GRAVEL	150	165

WELL TEST

☐ Bailing ☐ Pumping* [X] Other AIR LIFT

Test rate 25 gpm Duration of test 3/4 hrs.

Drawdown 20 ft.

Measured from: ☐ top of casing [X] ground level ☐ Other ____

Static Level (depth to water) 30 ft. Date: 2/17/95

Quality (clear, cloudy, taste, odor) CLEAR

*(Attach a copy of the pumping test record, per section 1521.05, ORC)

PUMP

Type of pump SUBMERSIBLE Capacity 20 gpm

Pump set at 100 ft.

Pump installed by OTHERS

WELL LOCATION

Location of well in State Plane coordinates, if available:

Zone ____ x ____ y ____

Elevation of well ____ ft./m. Datum plain: ☐ NAD27 ☐ NAD83

Source of coordinates: ☐ GPS ☐ Survey ☐ Other ____

Sketch a map showing distance well lies from numbered state highways, street intersections, county roads, buildings or other notable landmarks.

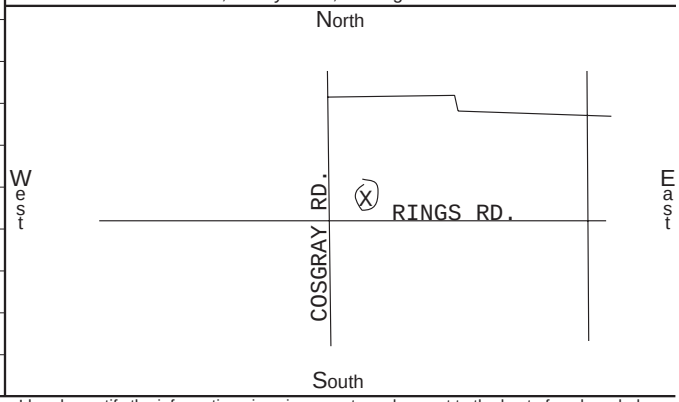

*(If additional space is needed to complete well log, use next consecutively numbered form.)

I hereby certify the information given is accurate and correct to the best of my knowledge.

Drilling Firm ACME DRILLING COMPANY Signed W. E. Coyote

Address 1234 MAIN ST. Date 2/27/95

City, State, Zip SOCKERDOWNE, OH 56789 ODH Registration Number 3456

Completion of this form is required by section 1521.05, Ohio Revised Code - file within 30 days after completion of drilling.

ORIGINAL COPY TO - ODNR, DIVISION OF WATER, 1939 FOUNTAIN SQ. DRIVE, COLS., OHIO 43224

Blue - Customer's copy Pink - Driller's copy Green - Local Health Dept. copy

Figure J. Example well log and drilling report

practice to cut slots with a torch in the bottom two or three feet of casing to produce a home-made screen. These types of "screens", however, are highly inefficient and susceptible to corrosion and plugging. The casing and screen prevent the surrounding formations from caving into the well. Some formations are sufficiently consolidated that the well will remain open and no well screen is required.

Water can migrate along the space between the casing and the borehole wall; therefore, the best way to seal a well is to remove the casing and screen (if any), and grout the open hole. If there is no well log or other information about the construction of the well, or if the well casing is in poor condition, then it is probably best not to remove the casing (unless the well is an environmental well that can be easily overdrilled). Consideration should be given to having a registered drilling contractor rip or perforate the casing in such cases.

Sealing Materials

The data in this section relies heavily on information found in the Michigan Water Well Grouting Manual (Gaber and Fisher, 1988).

Materials used for sealing abandoned water wells must have certain properties to make them desirable for use. The ideal grout should 1) be of low permeability in order to resist flow through them, 2) be capable of bonding to both the well casing (if necessary) and borehole wall to provide a tight seal, 3) be chemically inert or nonreactive with formation materials or constituents of the ground water with which the grout may come in contact, 4) be easily mixed, 5) be of a consistency that will allow the grout to be pumped and remain in a pumpable state for an adequate period of time, 6) be capable of placement into the well through a 1-inch diameter pipe, 7) be self-leveling in the well, 8) have minimal penetration into permeable zones, 9) be capable of being easily cleaned from mixing and pumping equipment, 10) be readily available at a reasonable cost, and 11) be safe to handle.

Grouting materials currently used in water wells are comprised of either cement or bentonite. Although there are advantages and disadvantages with each material and none of the grout materials available today exhibit all of the desirable characteristics listed above, field experience has shown each to be suitable under most geological conditions. Table 1 lists advantages and disadvantages of cement and bentonite grouts.

Final permeability of the grout is recommended to be 1×10^{-7} centimeters per second to retard fluid movement. Table 2 shows approximate permeability values for various sealing materials.

Cement–Based Grouts

Cement Properties

Portland cement is the main ingredient in cement-based grouts such as neat cement or concrete. Cement is a mixture of lime, iron, silica, alumina, and magnesia components. The raw materials are combined and heated to produce cement clinker. The clinker is ground up and mixed with a small amount of gypsum or anhydride to control setting time.

When Portland cement is mixed with water (producing neat cement), several chemical reactions occur. Heat is generated as the mixture cures and changes from a slurry to a solid. This is referred to as the heat of hydration and results in a temperature increase in the formation material at the cement/borehole interface and the well casing, if any remains in the hole (Troxell, et.al., 1968; Portland Cement Association, 1979). The amount of heat given off is dependent upon several factors such as cement composition, use of additives, and surrounding temperatures. Excessive heat of hydration may adversely affect the structural properties of any PVC plastic well casing left in the borehole (Molz and Kurt, 1979; Johnson et.al., 1980).

The setting of cement is controlled by temperature, pressure, water loss, water quality, and other factors (Smith, 1976). Warm water used for slurry preparation and warmer air temperature will cause faster setting than cold water and cooler air temperature. Cement in the borehole will tend to set faster at the bottom since the weight of the cement column will increase hydrostatic pressure on the cement at the bottom. Water expelled from the cement into permeable zones will also result in an increased rate of setting. Standard Portland cement will reach its initial set in about 4 hours at a 50°F curing temperature. Table 3 shows total curing times for various cement grouts.

Table 1
Grout Properties

	Advantages	Disadvantages
CEMENT-BASED GROUTS	Suitable Permeability	Shrinkage & Settling
	Easily Mixed & Pumped	Long Curing Time
	Hard-Positive Seal	High Density Results in Loss To Formations
	Supports Casing	Heat of Hydration
	Suitable For Most Formations	Affects Water Quality
	Proven Effective Over Decades Of Field Use	Equipment Clean-Up Essential
	Properties Can Be Altered With Additives	Casing Cannot Be Moved After Grouting
BENTONITE-BASED GROUTS	Suitable Permeability With High Solids Grouts	Premature Swelling And High Viscosity Result in Difficult Pumping
	Non-Shrinking & Self-Healing	Difficult Mixing
	No Heat of Hydration	Subject to Wash Out in Fractured Bedrock
	Low Density	Subject to Failure From Contaminated Water
	No Curing Time Required	Equipment Clean-Up Difficult
	Casing Movable After Grouting	Limited Field Experience
		Usage Instructions Vary For Each Product
		Limited Availability

Table 2
Permeability of Various Sealing Materials

Sealing Material	Permeability (K) in cm/sec
Neat Cement (6 gal water/94 lb sack)	10^{-7}
Bentonite Grout (20% Bentonite)	10^{-8}
Bentonite Pellets	10^{-8}
Granular Bentonite	10^{-7}
Granular Bentonite/Polymer Slurry (15% Bentonite)	10^{-8}
Coarse Grade Bentonite	10^{-8}
(From American Colloid Co, and N.L. Baroid/N.L. Industries, 1989)	

Table 3
Cement Curing Time Required

Grout Type	Curing Time
Neat Cement - Type I	48 Hours
Concrete Grout - Type I	48 Hours
Neat Cement w/2% $CaCl_2$	24 Hours
Hi-Early Cement - Type III	12 Hours
Concrete Grout - Type III	12 Hours

Cement Types

Several types of cement are manufactured to accommodate various chemical and physical conditions which may be encountered. The American Society for Testing and Materials (ASTM) Specifications C150 (ASTM, 1992) is the standard used by cement manufacturers.

Portland cement Types I and IA are readily available throughout Ohio. Type II cement is available at some of the larger building supply outlets. Other cements are available by special order through cement suppliers. The different types of cement and their appropriate usage are described as follows:

Type I — General purpose cement suitable where special properties are not required.

Type II — Moderate sulfate resistance. Lower heat of hydration than Type I. Recommended for use where sulfate levels in ground water are between 150 and 1500 ppm.

Type III — High-early-strength. Ground to finer particle size which increases surface area and provides faster curing rate (approximately $^1/_4$ of the time it takes for Type I to cure). When Type III cement is used, the water to cement ratio must be increased to 6.3 to 7 gallons of water per sack.

Type IV — Low heat of hydration cement designed for applications where the rate and amount of heat generated by the cement must be kept to a minimum. Develops strength at a slower rate than Type I.

Type V — Sulfate-resistant cement for use where ground water has a high sulfate content. Recommended for use where sulfate levels in ground water exceed 1500 ppm.

Expansive-type cements are also available in Ohio. This type of cement will expand upon curing by use of additives in the mix, such as gypsum or aluminum powder.

Neat Cement Grout

Neat cement slurry is comprised of Portland cement and fresh water, with no aggregate present. It was first used as a grouting material in Texas and Oklahoma oil fields in the early 1900's (Smith 1976). Neat cement has since been used extensively in both the oil & gas and water well industries. Field experience has shown it to be effective for sealing off formations when properly applied. It can be mixed using a wide variety of methods. Generally, lower pressures are developed while pumping neat cement grouts. The main disadvantages of using neat cement are shrinkage upon curing, possible formation of a **microannulus** around the casing, and, in some cases, mixing according to manufacturer's specifications, which can result in a thick mixture that is difficult to pump.

In some states, neat cement is considered superior to bentonite-based grouts in situations where bedrock is encountered within 25 feet of ground surface. This is because it will form a hard, rock-like seal consistent with the bedrock and will not wash out or dilute from higher ground water flow rates encountered in some highly fractured formations.

The amount of shrinkage or settling, and compressive strength, of neat cement is dependent upon the proportion of water to cement in the slurry (Coleman and Corrigan, 1941; Halliburton Services, 1981). As the water to cement ratio increases, the compressive strength of the neat cement will decrease and shrinkage will increase. Laboratory studies and field experience have demonstrated that settling of cement particles will occur, resulting in a drop in the grout level (Coleman and Corrigan, 1941, Kurt, 1983). The top of the hardened neat cement grout mass will generally be a few feet below the slurry level due to this settling. Field observations show that the amount of settling will usually be 5 to 10 percent of the total grouted depth if the neat cement is mixed at 5 to 6 gallons of water per sack.

The American Petroleum Institute (API) recommends a water to cement ratio of 0.46 by weight or 5.2 gallons of water per 94-lb sack of cement. This is the amount of water needed to hydrate the cement. More than 5.2 gallons/sack ratio will thin the grout and make it easier to pump, but will adversely affect the grout's sealing properties. This guideline recommends that the maximum amount of water mixed per sack of cement be 6 gallons. The neat cement slurry at 6 gallons of water per sack of cement should weigh a minimum of 15 lbs/gal before pumping. At weights greater than 16 lbs/gal, pumping of the slurry becomes difficult due to higher **viscosity** and pumping pressure. **Density** measurements of the slurry using a **mud balance** are recommended to assure proper water-to-cement ratios.

Under certain conditions it may be necessary for the consulting engineer or regulatory agency to specify an increase in the water to cement ratio. Factors such as the cement type, addition of additives, and quality of ground water will affect the grout performance and should be considered when planning the grouting operation.

Concrete Grout

Concrete grout consists of Portland cement, sand, and water. The addition of sand to a neat cement slurry results in less shrinkage and tighter bonding to the casing and borehole. Also, the sand in the slurry will aid in bridging pores in permeable formations. Concrete grout should be used only under specific sealing circumstances, such as for sealing flowing wells, sealing water wells with natural gas or methane present, and sealing wells with cavernous zones. Concrete should be handled only by experienced registered drilling contractors due to the exacting requirements for its successful installation. Concrete grout must be pumped down a tremie pipe, or, if the borehole is free of water, poured down. Placing concrete grout through a column of water will cause the separation of sand from the slurry and result in placement problems. If concrete grout is used on a routine basis, it should be pumped through a metallic grout pipe because it is highly abrasive on plastic pipe. Concrete grout can also cause excessive pump wear.

Other Cement Additives

Accelerators may be added to cement to decrease its setting time when attempting to cement off flows in and around casings. This will allow the cement to set before it is washed out of the hole. Calcium chloride is the most common and readily available accelerator. It is generally used at between 2 and 4 percent by weight of cement. Accelerators should be used with caution since miscalculations or equipment breakdown can result in a cemented grout pump or hose. Other additives such as retarders, weight-reducing agents, weighting agents, lost circulation control agents, and water reducing agents are available for cements but are not routinely used for water well sealing.

Bentonite—Based Grouts

Clay Properties

Clays are the principal ingredient of all bentonite-based grouts and drilling muds. They may be characterized as naturally occurring substances which exhibit colloidal-like properties (remain in suspension in water for a long period of time) and varying degrees of **plasticity** when wet (Bates, 1969). The term clay is frequently applied to a variety of fine-grained materials including clays, shales, and clayey soils. They are all composed of small crystalline particles which are known as the clay minerals.

The common characteristic associated with clays is the very small particle size that has a very high surface area to mass ratio. Negative electrical charges on the particle surface result in the interaction of clays with other particles and water. This, coupled with the ability of certain clays to swell many times their original volume when **hydrated**, accounts for many of the properties and uses for clays.

The variety of bentonite commonly used in grouting materials and drilling muds is one in which the clay mineral is predominantly sodium-rich montmorillonite. Mined at relatively few locations, the majority of the high-grade sodium bentonite is obtained in Wyoming, Montana, and South Dakota (Gray and Darley, 1981). These clays are characterized by their ability to absorb large quantities of water and swell 10 to 12 times in volume. Bentonite particles tend to remain in suspension an indefinite period of time when placed in water. The resulting slurry is of low density and high viscosity. Bentonites that have calcium as the predominant exchangeable ion are less desirable as sealing materials because they have significantly lower swelling ability (Gaber and Fisher, 1988). That is why mixing cement and bentonite is ineffective for preventing shrinkage of cement as it cures. Calcium ions in the cement replace sodium ions in the bentonite by a process called ion exchange. The resulting calcium bentonite has little or no swelling capability, and is therefore unable to prevent shrinkage of the cement (Smith, 1994).

Properties of Bentonite/Water Slurries

Three important physical properties of a water/bentonite slurry are: 1) density, 2) viscosity, and 3) gel strength. A review of these properties will aid in understanding what makes a good bentonite grout.

Density is defined as the weight per unit volume of a fluid and is commonly expressed in pounds per gallon. The terms weight and density, although technically distinct, are frequently used interchangeably in the drilling industry. The density of grout determines how much pressure is exerted on the formation when the fluid is at rest and is a direct indicator of the amount of clay solids present. The higher the density, the more solids are suspended in solution. Density is measured using a mud balance. A mud balance measures a specific volume of grout slurry in pounds per gallon. The densities of various sealing materials can be seen in Table 4.

Measurements should be taken after each grout batch is mixed and a grout sample should also be collected after the grout appears at the surface. The grout discharged from the well should have a density equal to that of the grout before it was pumped. The grout must be pumped into the well until dilution is minimal.

Viscosity is a measure of a fluid's resistance to flow. The higher the viscosity of a fluid, the more difficult it becomes to pump. The viscosity of bentonite-based grouts is dependent upon a number of factors including: 1) the density, 2) the size and shape of the clay particles, and 3) the charge interaction between the particles (Driscoll, 1986). Viscosity can be measured with a Marsh funnel viscometer, which determines the time it takes to dispense one quart of fluid through the funnel. Water has a Marsh funnel viscosity of approximately 26 seconds; bentonite-based grouts should have a 70 second viscosity. Grout should be periodically checked for adequate viscosity. A low viscosity grout will make a less effective seal than a grout with the proper viscosity.

Gel strength is a measure of internal structural strength. It is an indication of a fluid's ability to support suspended particles when the fluid is at rest. Gel strength is caused by the physical alignment of positive and negative charges on the surface of the clay particles in solution. Gel strength is responsible for the quasi-solid (plastic) form of a clay/water mixture.

Table 4
Grout Slurry Densities

Product	Water Ratio	Minimum Density Lbs/Gal	Volume ft^3/sack
Neat Cement	6.0 gal./sack of cement	15.0	1.28*
	5.2 gal. recommended/sack of cement	15.6	1.18*
Neat Cement & CaC1 (accelerator)	6.0 gal./sack of cement CaC1- 2 to 4 lbs. sack of cement	15.0	1.28
Concrete Grout	1 sack of cement and an equal volume of sand per 6 gallon maximum water	17.5	2.0
Bentonite			
Benseal/EZ-Mud	Benseal - 1.5 pounds/gallon of water EZ-Mud - 1 quart/100 gallons of water	9.25	4.75
Volclay	2.1 pounds/gallon of water	9.4	3.6

(*From Halliburton Services, 1981)

The gel strength is affected by how well the clay particles are dispersed in solution and the amount of water the particles have absorbed. Gel strength is not typically measured in the field. However, it is related to the fluid density and is dependent largely on the quality of the bentonite.

High-Solids Bentonite Grout

Within the last decade, bentonite products developed specifically for well grouting have appeared on the market. Some use chemical additives when mixing to control the development of viscosity and gel strength. By design, these products are meant to be easy to pump, place, and clean up. Premature swelling and/or high viscosities may make them difficult to pump when they are not mixed properly. Generally, bentonite grouts require higher pumping pressures than neat cement grouts (Gaber and Fisher, 1988). It also is important to know the environment into which the bentonite will be placed.

For example, high concentrations of chlorides in the water will supress the hydration of bentonite unless it has been mixed with an agent that counteracts the effect of the chlorides (Smith, 1994).

The bentonite-based grouts currently available can be broadly grouped into four classifications. The classifications reflect the degree of processing and the particle size of the bentonite constituent. The four classes of materials are: 1) powdered bentonite, 2) granular bentonite, 3) coarse grade bentonite, and 4) pelletized bentonite. Each class of bentonite requires a different handling and placement method. Manufacturers recommend that mixing and placement methods should be assessed with regard to the depth to the water table, the required depth of grouting, and other pertinent geological information.

Powdered Bentonite/Clay Grout

Powdered bentonite/clay products available are similar in texture, appearance, and packaging to the high yield drilling mud grade bentonite. They are a mixture of bentonite clays (sodium and calcium) and other clays and do not possess the expansion characteristics of grouts containing predominantly sodium bentonite. They are marked as high solids clay grout with a resulting slurry of 15 to 20 percent clay solids by weight of water and are designed to have extended workability. When properly applied, they result in a flexible seal of low permeability. Adequate mixing of this product requires the use of a venturi-type mixer and a mud rotary type mud pump and recirculation system or a paddle mixer.

Some products utilize an inorganic chemical additive (magnesium oxide) referred to as an initiator, to aid in the development of gel strength. Exclusion of the initiator can result in decreased set strength, affecting the quality of the seal. Failure to meet manufacturer's density requirements or placement of the grout on top of a lower density material (e.g., drilling mud or water) can result in a disappearance of the grout material from the well. This is due to a lack of gel strength development, resulting in settling of bentonite material in the well or loss to surrounding formations. For this reason, the use of these products requires placement of the material the entire length of the borehole. A bentonite pellet or neat cement cap a few feet thick is also recommended near the surface.

Granular Bentonite Slurries

Granular bentonites are generally manufactured from high-yield, non-drilling grade bentonite. The bentonite is processed to provide coarse granular particles (predominantly 8 to 20 **mesh**) which possess considerably lower surface area-to-mass ratios than the finely ground, powdered bentonite. This results in slower water absorption and delayed hydration and expansion when compared to a finely ground bentonite.

One advantage of the granular bentonite slurry is that the delay in swelling of the bentonite particles for a short period of time (15 minutes or less) allows preparation of a slurry possessing a lower viscosity. If mixing and pumping are done efficiently, the granular bentonite slurries allow placement of a high density grout in a low viscosity state. Expansion of the bentonite then occurs downhole. Granular bentonite may be prepared with 15 to 20 percent bentonite content by weight. This results in a set grout which exhibits excellent permeability and gel strength characteristics.

These products rely on the addition of a synthetic organic polyacrylamide polymer to suppress the hydration and delay swelling of the bentonite particles. The use of such products requires particular attention to the manufacturer's mixing recommendations. One recommended mixing procedure requires addition of the polymer to water at a rate of 1 quart of polymer per 100 gallons of water prior to adding the granular bentonite at 1-$^1/_2$ to 2 lbs. per gallon (Smith and Mason, 1985). Mixing requires the use of blade or paddle-type mixers or grout mixers with recirculation. Centrifugal pumps are not recommended for mixing or pumping granular bentonite slurries. Upon addition of the bentonite, pumping of the grout material must be accomplished before swelling of the bentonite occurs. If expansion occurs prematurely the slurry cannot be pumped and the batch is wasted.

Coarse Grade Bentonite

Coarse grade bentonite, also referred to as crushed or chip bentonite, is processed by the manufacturer to provide a large particle size and density. The bentonite particles are sized from $^3/_8$ to $^3/_4$ inch

and are intended to fall without bridging through a column of water in a borehole. When placed properly, the coarse grade bentonite provides a high density, flexible down-hole seal of low permeability.

Due to the size of the coarse grade bentonites, care should be taken in their use. Since the material cannot be pumped, placement of the material requires pouring from the surface. Placement may be accompanied by tamping to insure that bridging has not occurred. The bentonite must be poured slowly, and the pouring rate should not exceed the manufacturer's specifications.

Prior to using this material, it should be sieved through $^1/_4$-inch mesh screen to remove fines which have accumulated in the bag during shipment. These fines, if not removed, will clump if they hit water and increase chances of bridging. Water should be poured on top of any coarse grade bentonite above the water table to induce swelling.

Pelletized Bentonite

The pelletized bentonite consists of $^1/_4$ to $^1/_2$-inch size, compressed bentonite pellets. As with coarse grade bentonite, pelletized bentonite provides a dense and flexible seal. Pelletized bentonite can be poured directly into the well through standing water. Precautions similar to those for the use of coarse grade bentonite are required to avoid bridging.

Availability Of Bentonite Grout Materials

Bentonite products are not as widely available as Portland cement and must be obtained from water well equipment suppliers. New bentonite grouting products with higher solids and improved workability will most likely be developed by the bentonite industry in the future.

Fill Materials

Complete filling with a bentonite material may not be economically feasible in wells that have exceedingly large volumes. Most wells in this category are of large diameter and, therefore, present a physical hazard. This type of well must be filled with load-bearing materials (Gordon, 1988). For example, large diameter, shallow dug wells can be filled with clean clay, such as that sold in 100 pound bags as fireclay (Peck, 1987). This clay, however, should not be used as a sealing material or fill material in other types of wells because it does not seal as effectively as commercially prepared bentonite products (Carlton, 1975) and can bridge in deeper, smaller diameter wells. There are other well types - such as wells completed in fractured limestones or extremely coarse gravel - that can contribute to the excessive loss of sealing materials. Fill materials can be used in such instances to bridge fractures and large voids in the water-producing zone before sealants are emplaced (Gordon, 1988).

There are a variety of low-cost materials which can be used to fill space where an impermeable seal is not required in a certain section of the borehole, as specified in the next section of these guidelines. Depending upon the application, these materials may be clean, disinfected sand, gravel, crushed stone, or clay. In all cases, the material should be clean — free of sticks, leaves, or other foreign matter. Additionally, the material should be free of any toxic chemical residue. All fill materials considered for well sealing should be sized to the well being sealed, meaning that the material should have particle-size diameters small enough not to cause bridging (Gordon,1988).

Procedures for Sealing the Well

General Sealing Procedures

The first step in the well sealing process is to remove all obstructions from the well. These obstructions can include pumps and related equipment, such as drop pipes, **pitless adapters**, and suction lines. Pumps that are stuck and cannot be pulled should be pushed to the bottom of the hole, if possible. Other obstructions could consist of trash, animal remains, and debris such as large rocks or pieces of wood. If there is a possibility that the well has been contaminated, which could be evidenced by the presence of items such as empty pesticide containers, fertilizer bags, or a strong odor, the well owner should inform the appropriate agency (see Appendix 1) before sealing begins.

After the obstructions have been removed from the well, the next step is to decide what to do with the casing. As discussed earlier, the casing can be removed (by pulling, overdrilling, drilling out, or

jacking out), ripped or perforated, or left intact if the annular seal is judged to be adequate. The treatment of the casing will depend on the condition and type of casing, and the type of well being sealed. Another factor to consider when attempting casing removal is the type of formation in which the well is developed. Wells developed in unconsolidated formations should be sealed by simultaneously removing the casing and adding the sealing and /or fill material(s) to the well. This is necessary because once the casing is removed from a well developed in an unconsolidated formation, the borehole walls may collapse, preventing complete sealing of the borehole. It is highly recommended that this and all other steps in the sealing process be performed by an experienced registered drilling contractor.

Ripping or perforating a casing should be done by experienced registered drilling contractors that have the specialized tools needed for this work. Well casings should be ripped or perforated when the casing cannot be removed and:

- voids are known to exist between the casing and the formation, or
- there is a gravel pack (type of filter pack) between the two casings of a double-cased well, or
- the well is located in an area of known ground water contamination, or
- any combination of the above.

Overdrilling is not a commonly used method of casing removal in the water well industry; rather, it is used more often to remove casings from environmental wells. Overdrilling a well requires a drilling contractor to drill a larger diameter borehole over the existing well. The depth of the overdrilled borehole will depend on the construction of the well and local hydrogeologic conditions. After overdrilling, the casing can then be pulled. The borehole where the well was located is then grouted. Well casings should be overdrilled when the casing cannot be pulled, the condition of the annular seal is questionable, and:

- there is water flowing from around the outside of the well casing (this condition can occur in flowing wells), or
- the well is located in an area of known contamination, or
- there is gravel packing connecting two or more hydraulic zones.

Once the casing issue has been resolved, the next step is to disinfect the well. Chlorine is the most commonly used disinfection product, and is sold in many forms: bleach, tablets, pellets, powder, etc.. At concentrations of 150 to 200 parts per million (or milligrams per liter), the chlorine will kill any bacterial organisms that may exist in the water. As a result, water forced back into the formation by the sealing process will not cause bacterial contamination of any wells that are downgradient of the sealed well and developed in the same aquifer. The well may be disinfected before casing removal if it is suspected that the borehole may collapse after removal of the casing.

Installation of the sealing material follows the disinfection process. The method of installation and the sealing materials used must be matched to the type of well being sealed. In most situations (except for shallow wells), the method that provides the easiest installation and best seal is pressure grouting with a neat cement or bentonite slurry. Pressure grouting involves pumping a mixture of neat cement and water, or bentonite, polymer or initiator, and water down a small diameter plastic or steel pipe (called a tremie pipe) which has been lowered to the bottom of the borehole or well (Figure K). As the slurry is pumped, the pipe is pulled back at a rate that keeps the end of the pipe submerged in the slurry. The slurry will displace any water in the well and force it to the surface. The well has been filled when the slurry reaches the surface. Time should be allowed for any settlement of the slurry to occur before the final steps in the well sealing procedure are followed.

Precautions must be taken to ensure that the sealing material does not bridge when sealing wells with coarse grade bentonite products. Chipped bentonite products can be used in wells 200 feet deep or less. Pelletized bentonite products can be used in wells 100 feet deep or less. All coarse grade products used in wells less than 24" in diameter should be poured over a wire mesh screen to eliminate the fine bentonite powder that could cause bridging. These products should be poured at a rate no faster than 3 minutes per 50 pound bag (Figure L). The pouring process should be halted occasionally in order to lower a weighted measuring tape into the well until it reaches the top of the sealing products to confirm that bridging has not occurred. A tamping device should be used where possible to break any bridges that form. The total volume of products used to fill the well should be very close to

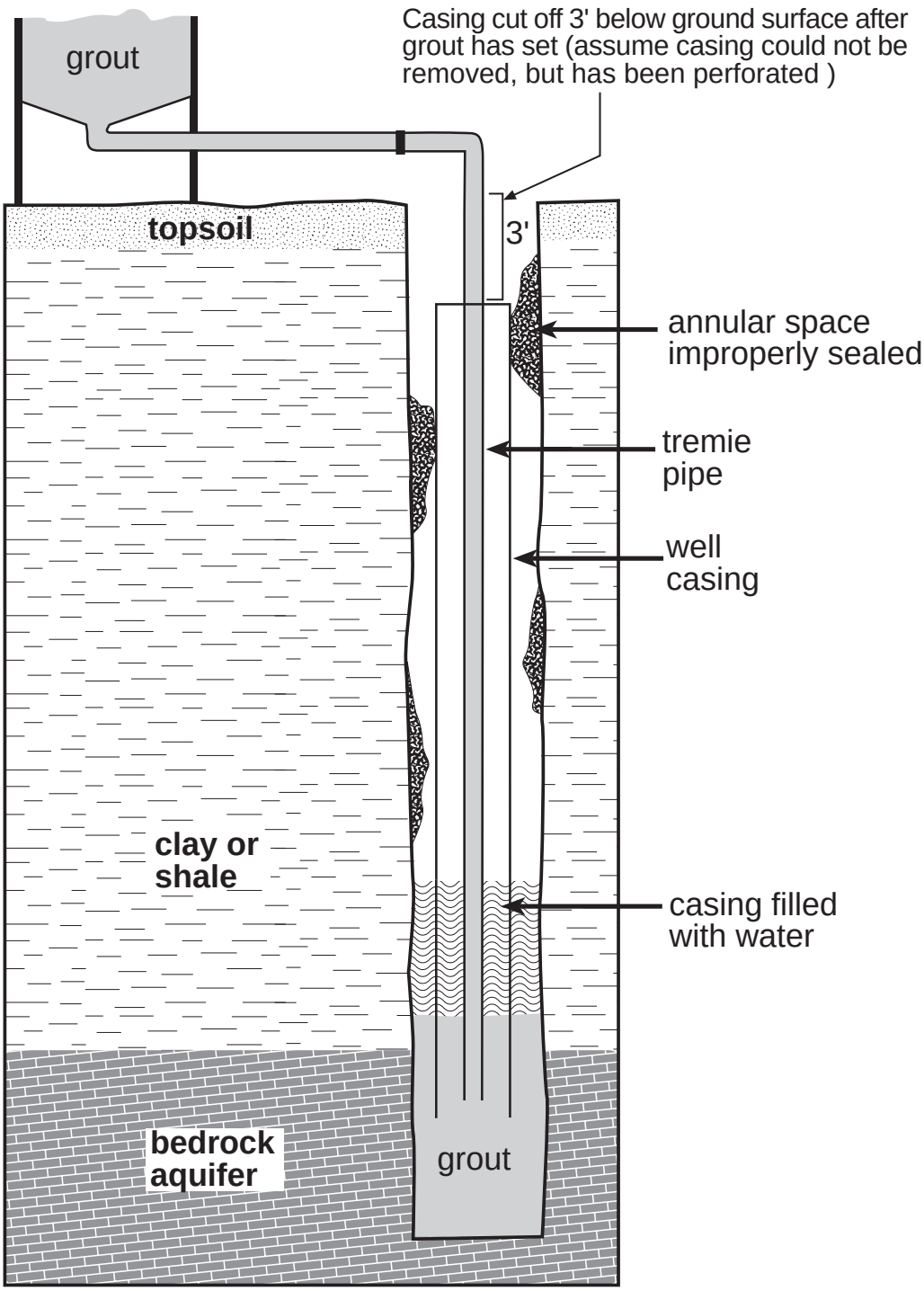

Figure K. Grouting bedrock well using tremie pipe method

the estimate of the amount needed for sealing. After the well has been sealed, it should be left unfinished overnight to see if any settling has occurred.

When the installation of sealing material has been completed, any remaining casing must be cut off to a depth of three to four feet below ground level. Then the remaining hole should be filled with clean soil and mounded at ground surface to ensure that surface water will drain away from the well. This procedure may be subject to change, depending upon the use of the land where the well is located.

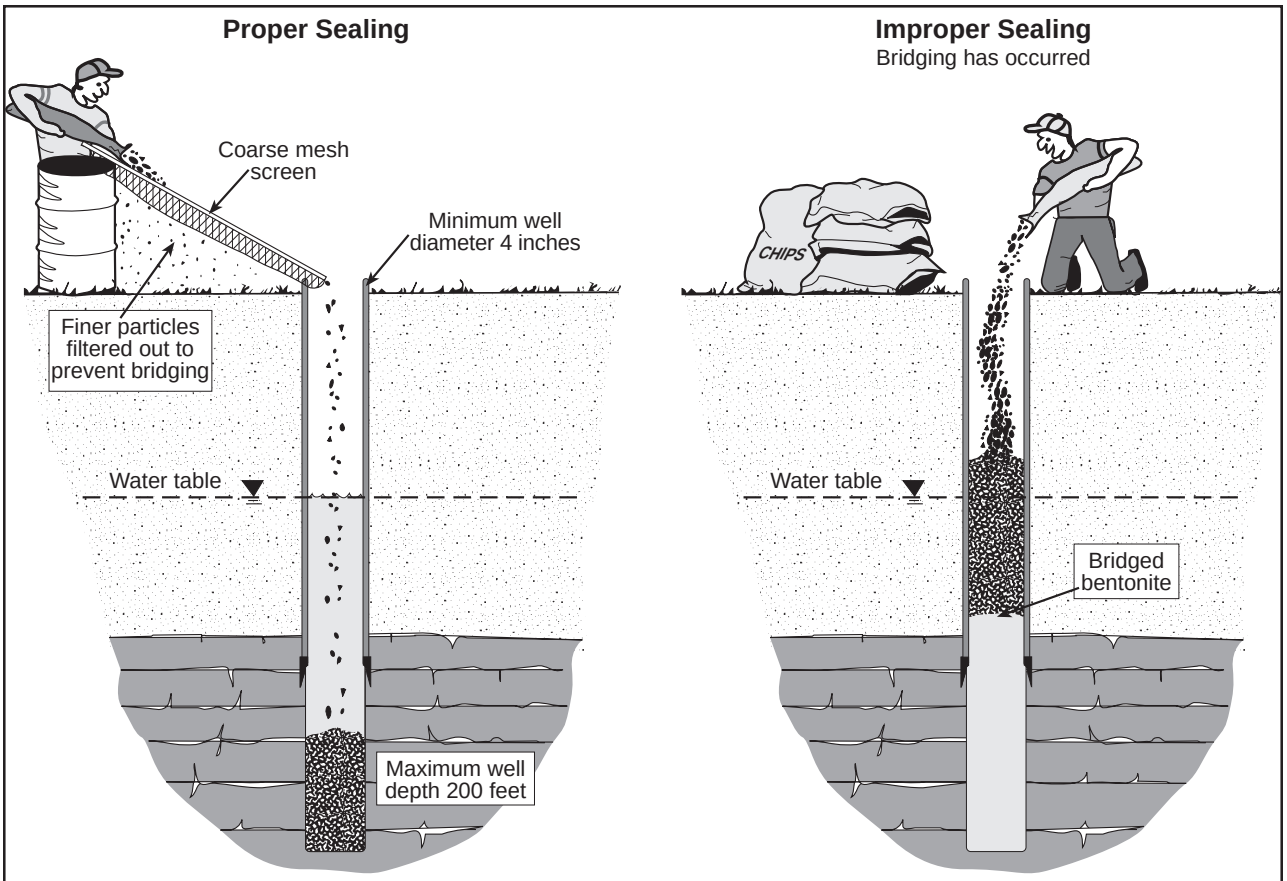

Figure L. Sealing wells with coarse grade bentonite products using pouring method
(Modified from Wisconsin Department of Natural Resources, 1993)

The final step in the well sealing process is the submission of a well sealing report to the Ohio Department of Natural Resources, Division of Water (Figure A). This form is readily available from the Division of Water upon request, and most drilling contractors will have a supply on hand.

Specific Well Sealing Procedures

Sealing Dug and Bucket-Drilled Wells

The procedure for sealing dug and bucket-drilled wells differs somewhat from the general procedures described earlier in this guidance (Figure M). Once any obstructions are removed, the liner (casing equivalent) should be left intact except for the upper 3 to 5 feet (this number is dependent upon the measured static level in the well). The static water level in the well should be measured, and the well pumped dry if it contains water. The well should be disinfected, wet or dry.

Backfill with clean clay or cement to the measured water level if the static water level is less than five feet below ground surface, and the well is greater than twenty-four inches in diameter and twenty-five feet or less in depth. Remove the liner to the depth of the measured water level and excavate 6 inches beyond the original outside diameter of the well. Add a one foot thick layer of impermeable sealing material at the depth of the measured water level. This layer could consist of coarse grade bentonite or cement. If the impermeable sealing material used is coarse grade bentonite, it should be hydrated before completion if the well has been pumped dry. Five gallons of potable water should be added per fifty pound bag of bentonite. Fill the remainder of the well with clean soil and mound at ground surface to ensure drainage of surface water away from the well.

Backfill with clean clay or cement to the measured water level if the static water level is greater than five feet below the ground surface, and the well is greater than twenty-four inches in diameter and twenty-five feet or less in depth. Add a one foot thick layer of impermeable sealing material and

hydrate. Then add more clean clay or cement to three feet below the ground surface. Remove the top three feet of liner and excavate six inches beyond the original outside diameter of the well. Add another one foot of sealing material and hydrate it if necessary. Fill the remainder of the well with clean soil and mound at ground surface to facilitate drainage of surface water.

Wells less than or equal to twenty-four inches in diameter with water levels greater than five feet below ground surface, or, wells greater than twenty-four inches in diameter and greater than twenty five-feet in depth, should be treated as drilled wells and sealed in a manner appropriate for drilled wells.

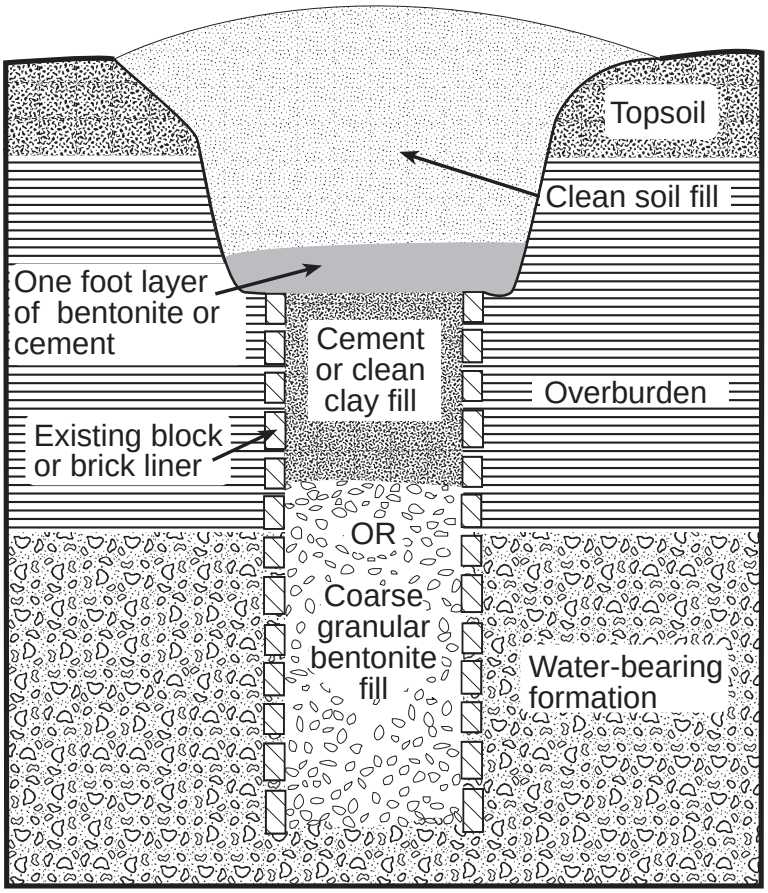

(Well is 25 feet deep or less and greater than 24 inches in diameter, and has a static level of less than five feet.)

Figure M. Sealing procedures for dug or shallow, large diameter wells

Sealing Driven Wells

After inspection and removal of any obstructions, the well should be disinfected. Casing removal should then be attempted. The well should then be filled with coarse grade or pelletized bentonite, bentonite slurry, or cement slurry to ground surface. The casing should be cut off three feet below the ground surface if it was not successfully removed. The area excavated around the well to access the casing should be filled with clean soil and mounded at ground surface to ensure drainage of surface water away from the well.

Sealing Wells Drilled Through a Single Unconsolidated Aquifer or an Unconfined, Unconsolidated Aquifer

After any existing obstructions have been removed from the well, the casing should be removed, ripped or perforated, or left intact. The type and condition of the casing will determine which procedure should be attempted. Before installing the sealing materials, the well should be disinfected. Then, clean sand and/or gravel can be placed from the bottom of the well to the top of the aquifer, or to twenty-five feet below ground surface, whichever is encountered first. Next, the well should be pressure grouted with bentonite or cement slurry, or coarse grade bentonite products can be slowly poured, from twenty-five feet to ground surface. Hydrate any coarse grade or pelletized bentonite products used, if necessary. Periodically tamp the coarse grade bentonite products to prevent bridging. These filling and sealing procedures should be done as the casing is being removed from the hole, if removal is to be attempted. If the well is not of great depth or large diameter, an alternative sealing method would be to pressure grout the entire well bore from bottom to ground surface with bentonite or cement slurry as the casing is being removed from the hole.

The casing should be cut off three feet below ground surface if it was not removed while sealing. The remaining excavation should be filled with clean soil and mounded at ground surface.

Sealing Wells Drilled Through Multiple Unconsolidated Aquifers

Remove any obstructions present in the well. After the well has been disinfected, simultaneously install the sealing materials and remove the casing, if it is to be removed. The well should be pressure grouted from the bottom of the well to ground surface with bentonite or cement slurry if the well penetrates multiple aquifers but is open only to one, or penetrates multiple aquifers and is screened across multiple zones. Or, if there is detailed information available on the depth and thickness of each aquifer penetrated, it may be possible to place clean sand and/or gravel within each aquifer zone, and place an impermeable sealing material, such as neat cement or bentonite products, between each aquifer corresponding to the confining unit present (Figure N). Then the well should be sealed from the top of the uppermost aquifer to the surface with neat cement or bentonite products. Coarse grade bentonite products (chips) can be slowly poured into the well until they appear at ground surface if the well is 200 feet deep or less, and is 4 inches or more in diameter (Figure N). Pelletized bentonite products can be used if the well is 100 feet deep or less, and is 4 inches or more in diameter. These bentonite products, when used, should be periodically hydrated, if necessary, and periodically tamped to prevent bridging.

Any casing not removed should be cut off three feet below ground level, and the remainder of the well can be filled with clean soil and mounded at ground surface.

Sealing Wells Drilled Through Confined, Unconsolidated Aquifers

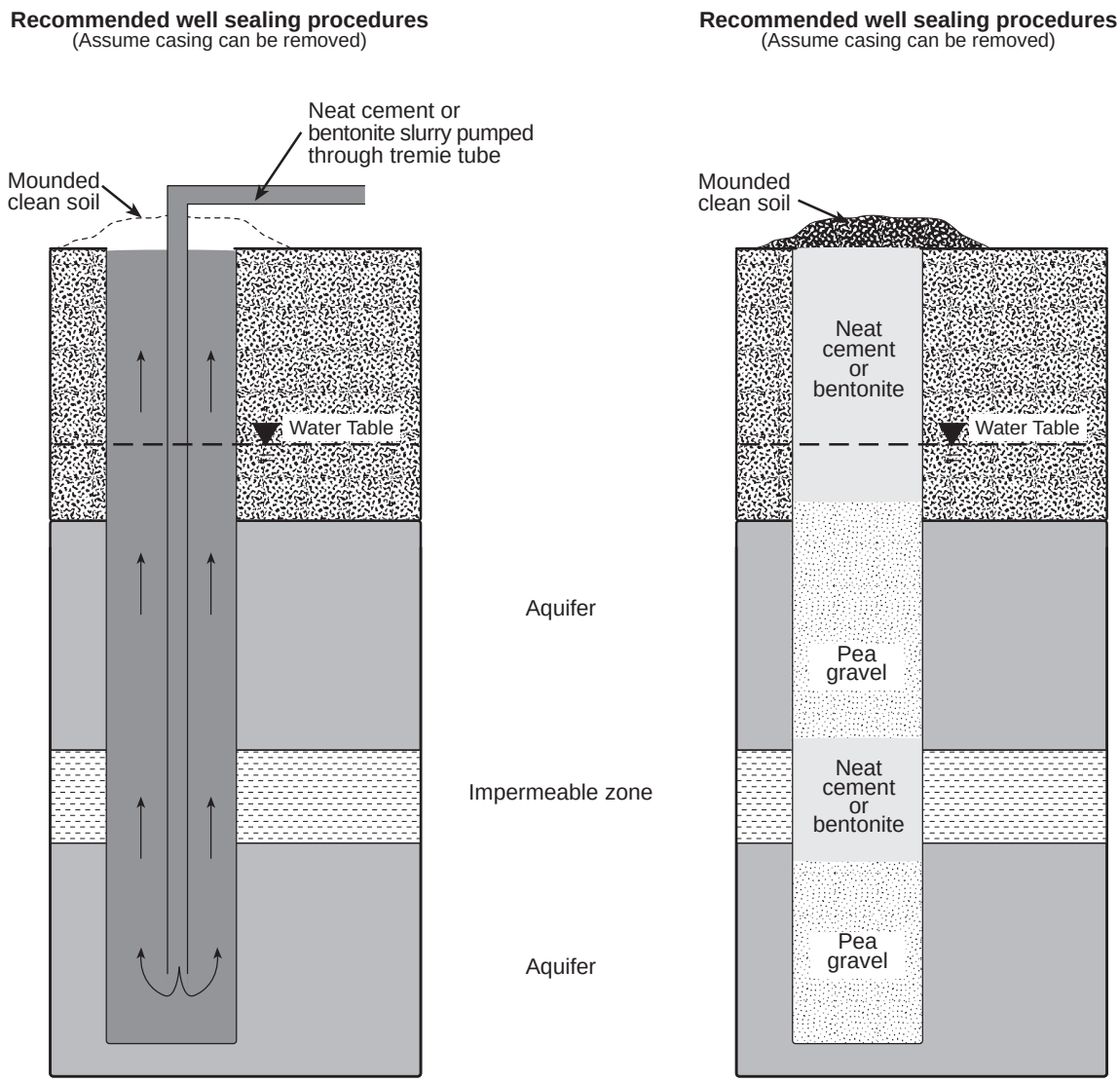

Figure N. Methods for sealing wells penetrating multiple aquifers

Wells drilled through confined aquifers can be difficult to seal because they can flow. This guidance strongly recommends that an experienced registered drilling contractor be consulted in all sealing situations, but it is especially important when dealing with these types of wells.

Once any obstructions are cleared, the casing must be removed, ripped or perforated, or left intact, depending upon the condition of the casing and the proposed sealing method. The well should then be disinfected, if possible, before the sealing materials are installed. If the well is not flowing, clean sand and/or gravel may be placed from the bottom of the well to the top of the producing zone or to twenty-five feet below the ground surface, whichever is encountered first. This should be followed by pressure grouting with cement or bentonite slurry, or by slowly pouring in coarse grade bentonite products or pelletized bentonite, from twenty-five feet to ground surface. Any coarse grade bentonite products used should be periodically hydrated, if necessary, and tamped to prevent bridging.

If the well is flowing from within the casing only, an attempt should be made to determine the hydraulic head. Extend the casing high enough to keep the well from flowing if the hydraulic head is low enough to permit casing extension (Figure O(1)). Pressure grout with cement from the bottom of the well to the ground surface. Coarse grade bentonite products (100 feet or less for pelletized bentonite, 200 feet or less for chipped) may be poured from the bottom of the well to ground surface if the

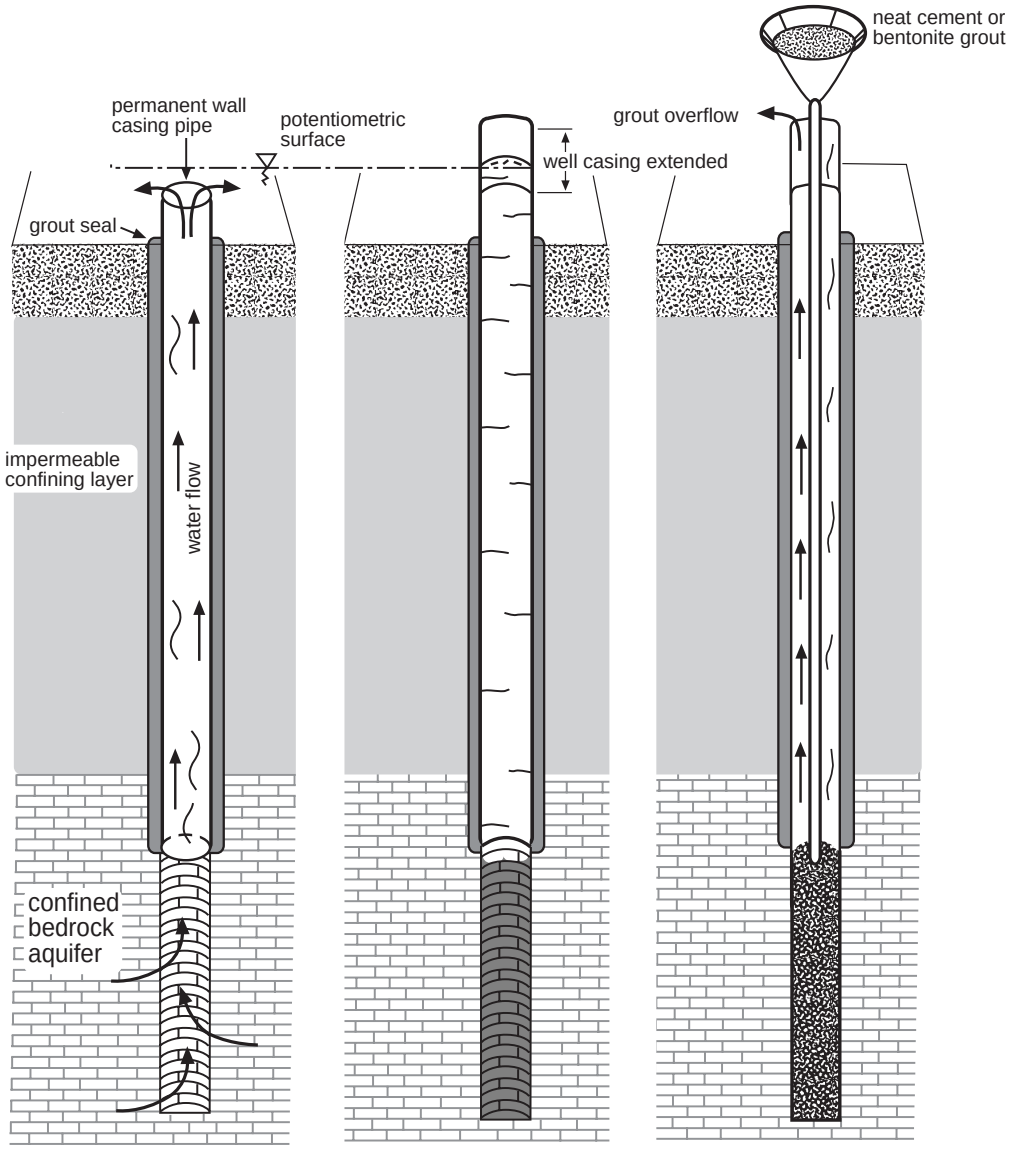

Figure O(1). Reducing or stopping flow of well by casing extension
(After Wisconsin regulations, 1994)

flow has been completely stopped by casing extension. The casing can then be cut off three to four feet below ground surface, and the remaining excavation filled with clean soil and mounded.

The well can be sealed by attempting to stop the flow, or by other methods that will allow sealing while the well is flowing, if the hydraulic head is too high to permit casing extension. An inflatable packer should be placed at the top of the producing formation to attempt to stop or restrict the flow (Figure O(2)). Then the well can be pressure grouted with cement or bentonite slurry through the packer from the bottom of the hole to the bottom of the packer. The packer can then be deflated and grouting continued to ground surface. It may also be possible to stop the flow by placing a shut-in device on top of the well. A tremie tube can be inserted through the shut-in device and the well pressure grouted with cement or bentonite slurry from the bottom of the well to the ground surface.

Another alternative for slowing the flow is to pour disinfected gravel into the well in an attempt to reduce the flow to a point where it becomes possible to use pressure grouting equipment to seal the well (Figure O(3)). Once the grout has set, any remaining casing can be cut off three to four feet below the ground surface. The resulting hole can then be filled with clean soil and mounded at ground surface.

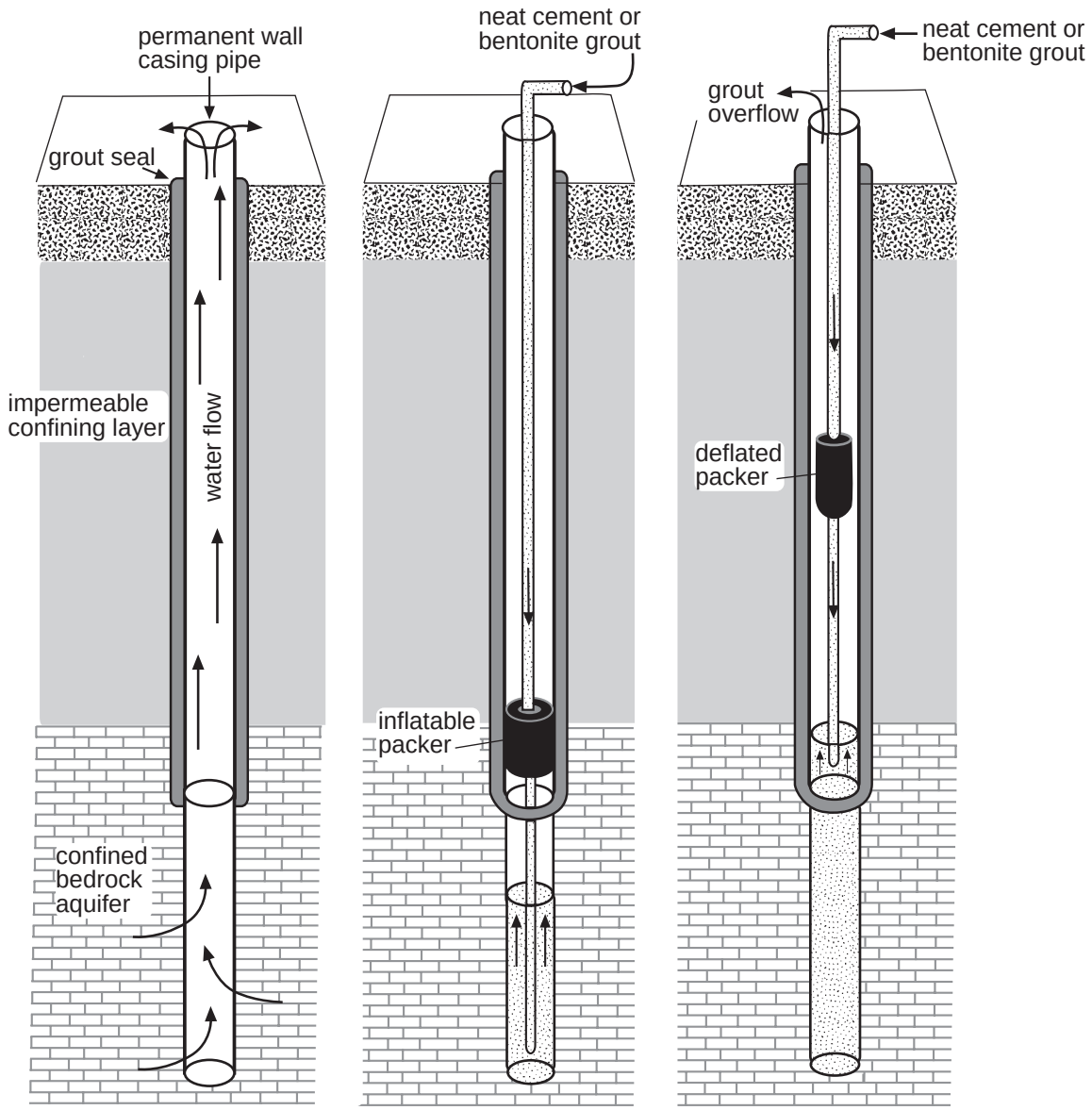

Figure O(2). Using inflatable packer to restrict flow
(After Wisconsin regulations, 1994)

The well should be pressure grouted continuously from bottom to top with a fast setting cement if the well is flowing from within the casing and around the outside of the casing, and if the casing can be removed by overdrilling. If the casing cannot be removed, tremie lines should be run along the outside of the casing if there is an annular space, and down through the middle of the casing, so that the well bore and the annular space can be continuously and simultaneously pressure grouted from the bottom of the well to the ground surface.

Sealing Wells Drilled Through Single Consolidated Aquifers

These types of wells should be sealed in the same manner as wells drilled through single unconsolidated aquifers, except that the casing removal and sealing need not occur simultaneously. Please refer to that section for sealing procedures.

Sealing Wells Drilled Through Multiple Consolidated Aquifers

Any obstructions should be removed and the casing should be removed, perforated, ripped, or left intact. The well then should be disinfected prior to the installation of the sealing materials. The well should be pressure grouted with cement or bentonite slurry from the bottom of the well to the ground surface. Alternatively, if there is enough information available about the construction of the well and

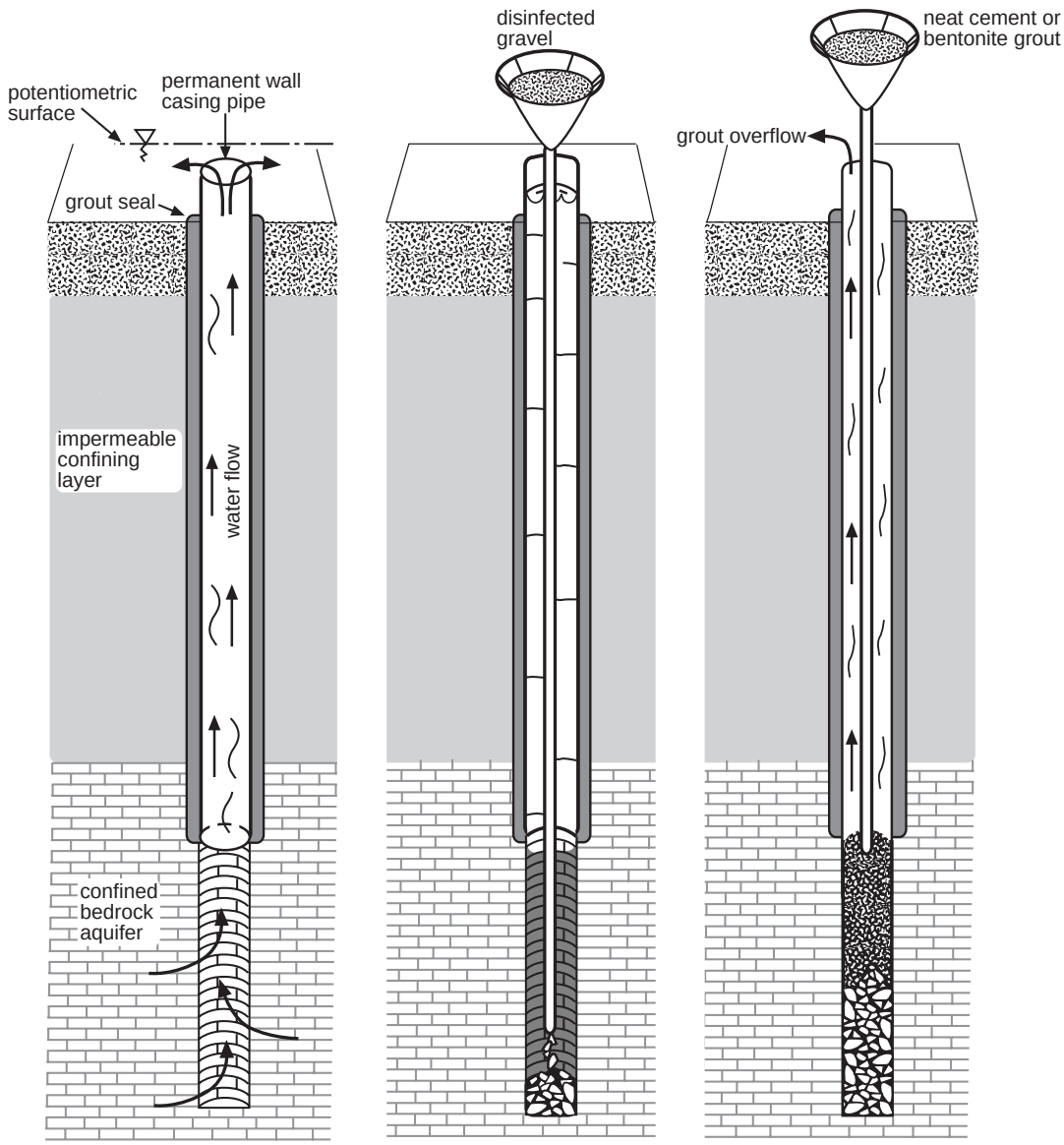

Figure O(3). Pouring disinfected gravel into well to reduce flow
(After Wisconsin regulations, 1994)

formations penetrated, gravel fill can be used in the water-bearing zones, while an impermeable sealing material (bentonite or cement) can be used to seal the confining layers. An impermeable material also can be used as a seal from the top of the uppermost aquifer to the surface. Any remaining casing should then be cut off three to four feet below the ground surface, and the resulting excavation should be filled with clean soil and mounded. Refer to Figure N for details on these sealing methods.

Sealing Wells Drilled Through Fractured or Cavernous Formations

Once initial issues of obstructions, casing, and disinfection have been taken care of, the next step is to try to determine the depth(s) at which the fractured or cavernous zones occur. During sealing, a plug may be placed above the cavernous interval, and then the well may be pressure grouted with cement or bentonite slurry from the top of the plug to the ground surface. A well with a highly fractured zone of known depth could be sealed in the same manner (Figure P). The well could be filled with coarse gravel to the top of the fractured or cavernous zone, and then pressure grouted from the top of that zone to the ground surface (no plug would be needed above the gravel fill) if the fractured or cavernous zone is not extensive. The casing should be cut off three to four feet below the ground surface, and the remaining hole filled with clean soil and mounded, to complete the sealing process.

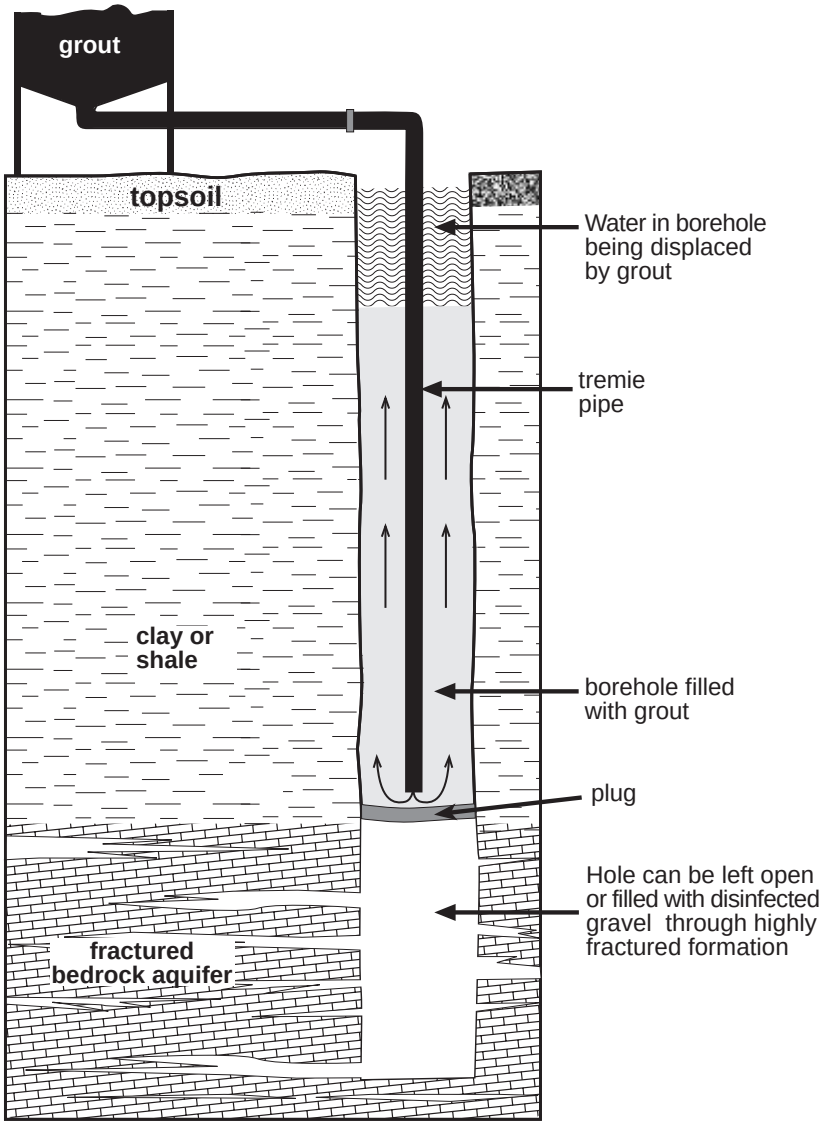

Figure P. Sealing procedures for wells penetrating fractured or cavernous formations

Sealing Flowing Wells Drilled Through Single or Multiple Consolidated Aquifers

Flowing wells drilled through consolidated aquifers can be sealed in the same manner as wells drilled through confined, unconsolidated aquifers. Please refer to the procedures in that section for well sealing information.

Sealing Wells of Unknown Construction

After any obstructions have been removed, the casing should be left in place due to the lack of information on the construction details of the well. Disinfect the well, then attempt to determine the depth of the well. The well should be pressure grouted from bottom to top with bentonite or cement slurry if the depth of the well is 300 feet or less, and the diameter is twenty four inches or less. Wells greater than 300 feet in depth should be pressure grouted as well, but specialized equipment may be required to pump grout to these depths.

The casing should be cut off three to four feet below ground surface. The remainder of the well should be filled with clean soil and mounded at ground surface.

The final step in all of these well sealing procedures is to file a well sealing report with the Ohio Department of Natural Resources, Division of Water. A summary of all the well sealing procedures discussed in this section can be found in Table 5.

Conclusions

Unsealed or improperly sealed abandoned wells present a very real threat to the quality of ground water in Ohio. With potentially as many as 200,000 existing abandoned wells scattered across the state, it is apparent that steps must be taken now to guarantee the future quality of the state's ground water resources.

The guidelines outlined in this document are the result of a genuine need for information on how to seal abandoned wells properly. While these guidelines are not intended to cover every possible scenario, they can certainly serve as a reference for basic methodologies to be followed in commonly encountered situations. It is strongly recommended that a well owner consult an experienced registered drilling contractor when preparing to seal a well. This is the best way to ensure that the well will be sealed in a manner appropriate for that type of well under those specific geologic conditions.

WELL TYPE		MATERIALS							METHOD OF INSTALLATION
		Clean fill		Concrete	Neat cement slurry	Coarse grade bentonite		Bentonite slurry w/70 second viscosity	
		Gravel and/or sand	Clay			Chips	Pellets		
UNCONSOLIDATED FORMATION(S)	Dug & bucket-drilled wells >24" in diam. and ≤ 25' in depth	No	Yes-to static level[1]	No	Yes	Yes	Yes	No	Material may be poured into well
	Driven wells	No	No	No	Yes	Yes[5]	Yes[5]	Yes	Slurry must be tremied, coarse grade bentonite must be slow-poured[2]
	Wells drilled through single aquifer ≤ 24" in diam., >25' deep	Yes- to top of aquifer or 25' below ground surface[3]	No	No	Yes	Yes[2]	Yes[2]	Yes	Slurry must be tremied, gravel may be poured, coarse grade bentonite must be slow-poured
	Wells drilled through multiple aquifers ≤ 24" in diam., >25' deep	Yes[4]	No	No	Yes	Yes[2]	Yes[2]	Yes	Slurry must be tremied, coarse grade bentonite must be slow-poured
	Flowing wells drilled through single or multiple aquifers	No[7]	No	Yes	Yes	Yes[6]	Yes[6]	Yes	Slurry must be tremied
CONSOLIDATED FORMATION(S)	Wells drilled through single aquifer ≤ 24" in diam., >25' deep	Yes-to top of aquifer or 25' below ground surface[3]	No	No	Yes	Yes[2]	Yes[2]	Yes	Slurry must be tremied, gravel poured, coarse grade bentonite must be slow-poured
	Wells drilled through multiple aquifers ≤ 24" in diam., >25' deep	Yes[4]	No	No	Yes	Yes[2]	Yes[2]	Yes	Slurry must be tremied, gravel poured, coarse grade bentonite slow-poured
	Wells drilled through fractured or cavernous formations	Yes-through fractured or cavernous zones only	No	Yes	Yes-from top of plug or cavern fill to surface	Yes-from top of plug or cavern fill to surface	Yes-from top of plug or cavern fill to surface	Yes-from top of plug or cavern fill to surface	Slurry must be tremied, gravel only (no sand should be used) poured, coarse grade bentonite slow-poured
	Flowing wells drilled through single or multiple aquifers	No[7]	No	Yes	Yes	Yes[6]	Yes[6]	Yes	Slurry must be tremied
Drilled wells of unknown construction		No	No	No	Yes	No	No	Yes	Slurry must be tremied
Any wells >24" in diam. and >25' deep		Yes[4]	No	No	Yes	Yes[2]	Yes[2]	Yes	Slurry must be tremied, chips and pellets must be slow-poured and tamped periodically

[1] The clay fill must be topped with a 1ft. thick layer of bentonite or cement extending 6" beyond the original outside diameter of the well.
[2] The bentonite chips or pellets must be poured slowly over a wire mesh screen and into the well at a rate no faster than 3 minutes per 50 pound bag. Pellets should be used in wells no deeper than 100 feet, chips in wells no deeper than 200 feet. These products should be tamped periodically and hydrated if they are placed above the water table, or if the well is dry. The diameter of the well must be 4" or greater.
[3] The well should then be filled to the surface with cement or bentonite products.
[4] Gravel and/or sand may be used in aquifer zones provided there is an impermeable plug of bentonite or cement placed between these zones, and from the top of the uppermost zone to the surface.
[5] Coarse grade bentonite may be used in wells 25 feet deep or less as long as it is tamped periodically. Wells deeper than 25 feet must be sealed with a tremied slurry.
[6] Coarse grade bentonite may be used if flow has been stopped by casing extension and products are able to fall to the bottom of the well. Well should be 200 feet deep or less, and at least 4 inches in diameter.
[7] Gravel may be used in flowing wells only to slow flow enough to allow grouting to proceed.

Table 5 Summary of Recommended Well Sealing Procedures

References

Aller, L., T.W. Bennett, G. Hackett, R.J. Petty, J.H. Lehr, H. Sedoris, D.M. Nielsen and J.E. Denne, 1991. Handbook of suggested practices for the design and installation of ground water monitoring wells. Environmental Monitoring Systems Laboratory, Office of Research and Development, U.S. Environmental Protection Agency, EPA/600/4-89/034.

American Colloid Company, no year. Volclay grout product information. American Colloid Company, Arlington Heights, Illinois.

American Society for Testing and Materials, 1992. Standard specification for portland cement, method C150-92. Annual Book of American Society for Testing Material Standards, Philadelphia, Pennsylvania, Volume 4.01, pp. 121-125.

_____, 1993. Decommissioning of ground water wells, vadose zone monitoring devices, boreholes, and other devices for environmental activities, method D5299-92. Annual Book of American Society for Testing Material Standards, Philadelphia, Pennsylvania, Volume 4.08, pp. 270-285.

American Water Works Association, 1984. Appendix I: abandonment of test holes, partially completed wells, and completed wells. American Water Works Association Standard for Water Wells, American Water Works Association, Denver, Colorado, pp. 45-47.

Bates, R.L., 1969. Geology of the industrial rocks and minerals. Dover Publications, Inc., New York, New York.

Carlton, R.W., 1975. Potential use of Ohio clays in the well-plugging industry. Ohio Department of Natural Resources, Division of Geological Survey, Report of Investigations No. 97, 9 pp.

Coleman, J.R. and G.I. Corrigan, 1941. Fineness and water-cement ratio in relation to volume and permeability of cement. Petroleum Technology, Technical Publication No. 1226, pp. 1-11.

Driscoll, F.G., 1986. Groundwater and wells. Johnson Filtration Systems, St. Paul, Minnesota, 1089 pp.

Freeze, R.A. and J.A. Cherry, 1979. Groundwater. Prentice-Hall, Inc., Englewood Cliffs, New Jersey, 604 pp.

Gaber, M.S. and B.O. Fisher, 1988. Michigan water well grouting manual. Michigan Department of Public Health, Ground Water Quality Control Section, 83 pp.

Glanville, T., 1989. Plugging abandoned wells. Iowa State University Extension, Ames, Iowa, 6 pp.

Golden, S., personal communication, 1995. Ohio Department of Health, Bureau of Local Services.

Gordon, D.L., 1988. Guidelines for plugging abandoned water wells. Iowa Department of Natural Resources, Technical Information Series 15, 46 pp.

Gray, G.R. and H.C.H. Darley, 1981. Composition and properties of oil well drilling fluids. Gulf Publishing Co., Houston, Texas.

Hackett, G., 1987. Drilling and constructing monitoring wells with hollow-stem augers part 1: drilling considerations. Ground Water Monitoring Review, Fall 1987, pp. 51-62.

_____, 1988. Drilling and constructing monitoring wells with hollow-stem augers part 2: monitoring well installation. Ground Water Monitoring Review, Winter 1988, pp. 60-68.

Halliburton Services, 1981. Halliburton cementing tables. Duncan, Oklahoma.

Ingersoll-Rand Company, 1988. The hole story. Ingersoll-Rand Company, Roanoke, Virginia, 11 pp.

Johnson, R.C. Jr., C.E. Kurt and G.F. Dunham, Jr., 1980. Well grouting and casing temperature increases. Ground Water, Volume 18, No. 1, pp. 7-13.

King, D.P., 1992. Sealing abandoned water wells: a campaign primer. Illinois Department of Energy and Natural Resources, 51 pp.

Kraemer, C.A, J.A. Shultz and J.W. Ashley, 1991. Monitoring well post installation considerations in: D.M. Nielsen (editor), Practical Handbook of Ground-Water Monitoring. Lewis Publishers, Inc., Chelsea, Michigan, pp. 333-363.

Kurt, C.E., 1983. Cement-based seals for thermoplastic water well casings. Water Well Journal, Volume 37, No. 1, pp. 38-40.

Midwest Plan Service, 1979. Private water systems handbook. Midwest Plan Service MWPS-14, Iowa State University, Ames, Iowa, 72 pp.

Molz, F.J. and C.E. Kurt, 1979. Grout-induced temperature rise surrounding wells. Ground Water, Volume 17, No. 3, pp. 264-269.

N.L. Baroid, 1989. Baroid drilling fluids products. N. L. Baroid/N. L. Industries, Inc., Houston, Texas.

Ohio Environmental Protection Agency, 1995. Technical guidance manual for hydrogeologic investigations and ground water monitoring, chapter 9. Columbus, Ohio.

Peck, C., 1987. "Grouting as seen by a cable tool driller" in Drill Bits, Fall 1987. Ohio Department of Natural Resources, Division of Water, 6 pp.

Portland Cement Association, 1979. Design and control of concrete mixtures. Twelfth Edition, Skokie, Illinois.

Renz, M.E., 1989. In-situ decommissioning of ground water monitoring wells. Water Well Journal, Volume 43, No. 5, pp. 58-60.

Smith, D.K., 1976. Cementing. Society of Petroleum Engineers of AIME, New York, New York.

Smith, S.A., 1994. Well & borehole sealing: importance, materials, and recommendations for decommissioning. Ground Water Publishing Co., 69 pp.

Smith, S. and C. Mason, 1985. Bentonite grouting. Water Well Journal, Volume 39, No. 2, pp. 35-37.

Troxell, G.E., H.E. Davis and J.W. Kelly, 1968. Composition and properties of concrete. McGraw-Hill, New York, New York.

U. S. Department of the Interior, 1977. Ground water manual. U. S. Department of the Interior, Bureau of Reclamation, U. S. Government Printing Office, Washington, D. C., p. 8.

Wisconsin Administrative Code, 1994. Well and drillhole abandonment. Wisconsin Administrative Code, Section NR 812.26.

Wisconsin Department of Natural Resources, 1993. Well abandonment. Wisconsin Department of Natural Resources, Madison, Wisconsin, 6 pp.

Zahniser, T.E. and M. Gaber, 1993. Plugging abandoned wells. Michigan State University Extension, Bulletin WQ 40, 6 pp.

Glossary

Annular space	the space between the well casing and the borehole wall.
Aquifer	a geological formation, part of a formation, or group of formations that is capable of yielding a significant amount of water to a well or spring.
Bailing	the use of a bucket, or rigid tube or pipe with a valve to remove fluid volumes or debris and cuttings from a well.
Borehole	a hole in the earth made by a drill; the uncased drill hole from the surface to the bottom of the well.
Casing	an impervious, durable pipe placed in a well to prevent the walls from caving and to seal off surface drainage or undesirable water, gas, or other fluids, and prevent their entering the well.
Cistern	a large receptacle used for storing water, especially an underground tank in which rainwater is collected.
Confining bed	a body of impermeable or distinctly less permeable material stratigraphically adjacent to one or more aquifers.
Confined aquifer	an aquifer bounded above and below by beds of distinctly lower permeability than that of the aquifer itself and which contains groundwater under pressure greater than that of the atmosphere. This term is synonymous with the term "artesian aquifer."
Consolidated	lithified geologic materials. In Ohio, these materials constitute formations such as sandstone, limestone, and shale.
Cuttings	chips removed from the borehole by a bit in the process of well drilling.
Density	the mass or quantity of a substance per unit volume, usually expressed in grams per cubic centimeter.
Drill rod	the extension rods used to attach the bit to the drilling rig to enable the penetration into the earth.
Drill bit	a device used on the end of a drilling stem or rod for the purpose of penetrating earth formations. Drilling bits are usually made of a hardened material so as to last an extended period of time.
Drilling mud	a special mixture of clay, water, and chemical additives pumped down hole through the drill pipe and drill bit. The mud is used to lubricate and cool the bit and to float cuttings to the surface for removal.
Drill tools	general term associated with all equipment used in the drilling process. Tools, bits, rods, stems, etc.
Dug well	a well excavated into a generally shallow, unconsolidated aquifer in which the side walls may be supported by material other than standard weight steel casing.
Filter pack	siliceous, well-rounded, clean, and uniform sand or gravel that is placed between the borehole wall and the well screen to prevent formation material from entering through the screen.
Formation	a body of consolidated or unconsolidated rock characterized by a degree of lithologic homogeneity which is prevailingly, but not necessarily, tabular and is mappable on the earth's surface or traceable in the subsurface.
Geologic conditions	the distribution, types, and structural features of earth materials present in any given area.

Geotechnical boring	borings installed to determine the geological and engineering properties of subsurface soils.
Ground water	any water below the surface of the earth in a zone of saturation.
Grout	As used in these guidelines, grout is a fluid mixture of water and cement or water and bentonite that is of a consistency to be pumped through a small-diameter pipe.
Hydrated	the incorporation of water into the chemical composition of mineral.
Hydraulic head	the height of the free surface of a body of water above a given subsurface point; a reflection of the ground water level plus the pressure head.
Hydrogeologic conditions	the occurrence, distribution, and quality of subsurface water within consolidated and/or unconsolidated earth materials in a given area.
Mesh	one of the openings in a screen or sieve. The value of the mesh is usually given as the number of openings per linear inch.
Microannulus	for the purpose of this guidance document the term means the space between the sealing material and the casing and/or the formation. This is caused by the shrinkage of the sealing material.
Monitoring well	any excavation that is drilled, cored, bored, washed, driven, dug, jetted, or otherwise constructed for the purpose of extracting groundwater for physical, chemical, or biological testing, or for the purpose of determining the quantity or static level of ground water on a continuing basis.
Mud balance	a scale that measures a specific volume of grout slurry (density) and is expressed in pounds per gallon.
Permeability	the capacity of a porous rock, sediment, or soil for transmitting fluid; a measure of the relative ease of fluid flow across a pressure gradient.
Pitless adapter	a device or an assembly of parts which permits water to pass through the casing or extension thereof; provides access to the well and to the parts of the water system within the well; and provides for the transportation of the water and the protection of the well and water therein from surface or near surface contaminants.
Plasticity	the capability of being deformed permanently without rupture.
Pore	a tiny opening, usually microscopic, in consolidated or unconsolidated materials.
Recharge	the processes by which water is absorbed and is added to the saturation zone, either directly into a formation, or indirectly by way of another formation.
Saturated zone	the portion of consolidated or unconsolidated materials in which all of the pore space is occupied by water.
Static level	the distance measured from the established ground surface to the water surface in a well being neither pumped nor under the influence of pumping nor flowing under artesian pressure.
Stratigraphic	the arrangement of consolidated and unconsolidated strata.
Test boring	a boring designed to obtain information on ground water quality and/or geological and hydrogeological conditions.
Unconsolidated	not lithified but loose, soft geologic materials. Alluvium, soil, gravel, clay, and overburden are some of the terms used to describe a formation consisting of unconsolidated materials.
Viscosity	the property of a fluid or semi-liquid to offer internal resistance to flow.
Well	any excavation, regardless of design or method of construction, created for

	any of the following purposes: (1) removing ground water from or recharging water into an aquifer; (2) determining the quantity, quality, level, or movement of ground water in or the stratigraphy of an aquifer; and (3) removing or exchanging heat from ground water.
Well screen	a machine-slotted or wire-wrapped portion of casing used to stabilize the sides of the borehole, prevent the movement of fine-grained material into the well, and allow the maximum amount of water to enter the well with a minimum of resistance.
Yield	the quantity of water which may flow or be pumped from the well per unit of time.

Appendix 1

Contact Agencies

Ohio Department of Agriculture, Pesticide Regulation Section

The Ohio Department of Agriculture (ODA) does not currently provide routine well analysis for pesticides; however, the Pesticide Regulation Section of ODA will sample any well where it is suspected that the use of a pesticide may have contaminated the well. Samples must be collected by an ODA inspector to protect sample integrity, and then analyzed at the ODA laboratory in Reynoldsburg. The Pesticide Regulation Section will investigate to determine how the well was contaminated if a water sample is positive for a pesticide. The ODA will advise the well owner on how to clean up the well, and, if necessary, take appropriate enforcement action under Ohio Pesticide Law. The Ohio Department of Agriculture can be contacted at 614-728-6200.

Ohio Department of Commerce, Division of State Fire Marshal, Bureau of Underground Storage Tank Regulations (BUSTR)

In the event that any potable or non-potable water well is suspected of being contaminated with petroleum from a leaking petroleum underground storage tank (such as those used at gas stations), contact BUSTR at 1-800-686-2878 before sealing the well.

Ohio Department of Health, Division of Quality Assurance

For information on specific regulatory requirements for sealing private wells, or for questions about possible contamination with substances other than pesticides or petroleum products, contact the local health department or the Ohio Department of Health Private, Water System Program (PWSP) at 614-466-1390.

To determine the registration status of a particular private water system contractor (i.e., drilling contractor or pump installer), contact the local health department or the ODH-PWSP Public Inquiries Assistant at 614-466-0148.

Ohio Department of Natural Resources, Division of Mines & Reclamation

The Division of Mines and Reclamation regulates the abandonment of test borings for coal and industrial minerals exploration through the permitting process under the Ohio Revised Code Chapter 1513 and 1514. Most exploratory borings are mined through the removal of the coal or industrial mineral. Those borings that are not removed by mining are required to be properly sealed using procedures approved by the Division. The Division also recommends that the coal operator properly seal any original private water supply wells that are replaced by a new well drilled as a result of a water supply replacement order by the Chief. The Division investigates any ground water contamination complaints related to coal and industrial minerals mining activities.

Ohio Department of Natural Resources, Division of Oil & Gas

Personnel in the Groundwater Protection Section of the Division investigate ground water contamination cases when oil and gas operations are the suspected cause. If there is reason to believe that an unsealed, unused well on a property is an oil or gas well, the Division also has an Idle and Orphan Well Program that addresses the need to seal abandoned oil and gas wells. For more information on these two programs, contact the Division's Central Office at 614-265-6926.

Ohio Department of Natural Resources, Division of Water

The Ohio Revised Code, Section 1521.05, requires that a well sealing report be filed with the Division of Water for all wells sealed in the State of Ohio. Copies of the well sealing report can be obtained from the Division by calling 614-265-6739. The Division also collects well log and drilling reports required to be filed by drilling contractors for wells drilled across the state. This authority also comes from Section 1521.05 of the Ohio Revised Code. Requests for copies of well log and drilling reports on file can be made by calling 614-265-6740.

Ohio Environmental Protection Agency

The Ohio Revised Code 6111.42 gives the Ohio EPA authority to prescribe regulations for the drilling, operation, maintenance, and sealing of abandoned wells as deemed necessary by the director to prevent the contamination of underground waters in the state, except that such regulations do not

apply to non-public potable wells. Currently, the Ohio EPA, Division of Drinking and Ground Waters, has regulations for the sealing of public water supply wells (OAC 3745-9-10) and for wells used for the purpose of injecting fluids into the ground (OAC 3745-34-07, 60, and 36). Sealing of monitoring wells is generally handled by the Division that has regulatory authority over the site/facility. For information on specific regulatory requirements for public drinking water wells or for injection wells, the Division of Drinking and Ground Waters should be contacted at 614-644-2752.

The Ohio EPA has no regulations/requirements for a person to report contamination in their private well. Reporting of ground water contamination is only required if an entity is monitoring ground water in accordance with hazardous or solid waste rules. In general, the Ohio EPA will not respond to a request to evaluate a contaminated private well unless the local or state health department requests assistance in investigating the source of the problem. However, this will not affect how the well should be sealed, but may affect when it is sealed if additional investigation is initiated.

An exception to this occurs if the well was used to inject fluid waste. If it was used as an injection well, the owner/operator must contact the Division of Drinking and Ground Waters, Underground Injection Control Unit (U.I.C.) of the Ohio EPA at 614-644-2905. Specific requirements must be followed for the sealing of injection wells.

Appendix 2

Cost Considerations

When obtaining estimates for well sealing from local drilling contractors, it is necessary to understand upon what the contractor's price will be based. As seen in the guidelines, there are many steps in sealing a well properly. The preliminary steps, which involve researching the history of the well by obtaining a well log and drilling report or talking to neighbors, can be done by the well owner. However, except perhaps in the case of shallow dug wells, the remaining steps of the sealing process should be handled by a registered drilling contractor with experience in sealing abandoned wells.

The contractor must consider many factors in order to provide the best estimate possible. Besides the cost of the materials used to seal the well, the contractor must also consider the cost of the labor and equipment used to install them. For example (brand names used in this section are for illustrative purposes only and do not imply an endorsement of any particular product), most contractors can currently buy a bag of Benseal (a granular bentonite product installed in slurry form) from their supplier for approximately $7 per bag. The contractor must then add the cost of labor for installing the Benseal, the cost of the pumping equipment, and the cost of the polymer mixed with the Benseal. This will raise the price per bag of Benseal to approximately $75 per bag, installed. Multiply this by the 5 bags it takes to seal a 100 foot deep, 6 inch diameter well (see Table 6, and note that the number of bags required has been rounded up to the nearest whole bag), and the result is an estimate of $375. Or, suppose the well is to be sealed with a neat cement slurry. The installed price of cement slurry per bag is about $30. To seal the same well cited above, it will cost almost $480 because it will take nearly 16 bags of cement to fill the well (Table 6). These prices will probably not reflect the removal of any obstructions from the well, such as pumping equipment, the disinfection of the well, or removing, perforating, or cutting off the casing. These are all factors that will affect the contractor's estimate.

Another commonly used well sealing material is coarse grade bentonite, which consists of chips of bentonite ranging from $^3/_8$" to $^3/_4$" in size. Coarse grade bentonite is poured into the well, not pumped like a slurry. Therefore, the equipment and labor costs are lower. Assume that Holeplug is to be used to seal a 100 foot deep, 6 inch diameter well. Most contractors could probably purchase Holeplug from their suppliers for about $7 per bag. Add labor to install the Holeplug, and the price is raised to approximately $15 per bag. However, it will take almost 29 bags of Holeplug (Table 6) to fill the well. The result is a cost estimate of $435. Then, any of the factors mentioned in the previous discussion could add to this cost.

In some cases, more than one type of material may be used to seal the well. If the well to be sealed penetrates a highly fractured bedrock formation, such as limestone, the contractor may wish to fill the fractured portion of the well with gravel or aggregate, then finish the sealing process with a cement or bentonite slurry or a coarse grade bentonite product. Table 6 shows volumes of a standard size aggregate required to fill wells of varying depths and diameters. One cubic yard (27 cubic feet) of #8 aggregate (roughly $^3/_8$" in size) averages about $16. With labor included the cost averages $40. Keep in mind that the well should not be filled entirely with this aggregate. There must be impermeable material between the top of the aggregate layer and the ground surface. This type of sealing procedure should be used only under certain geologic conditions.

The most costly factor in sealing a water well is removing or perforating the casing. Depending upon the equipment used to remove or perforate the casing and the hours of labor involved in the process, the cost of the well sealing operation could be increased anywhere from $200 to $500. Some of the other factors, such as removing existing pumping equipment and cutting off the casing below ground surface, also may be labor intensive if any difficulties are encountered. This too will add to the total sealing price.

Obviously, there are many factors to be considered when a contractor provides an estimate for sealing a well. By being aware of these factors, the well owner can ask the contractor intelligent questions and be involved in the estimation process. This also will give the well owner a basis for evaluating different estimates to determine which contractor to hire to do the job.

Table 6 Table Comparing Volumes of Different Well Sealing Materials Required to Seal a 100 Foot Well

Hole Diameter Inches	Gallons Per Foot	Gallons to be Plugged in 100'well	Bags Required to Plug a 100 ft Well*			Hole Volume Cu Ft/Ft depth	Feet Filled by One Bag of Holeplug	Bags of Holeplug to Fill 100' Well*	Cu Ft of #8 Aggregate to Fill a 100' Well
			Benseal	Enviroplug	Neat Cement				
2	0.17	17	1	1	2	0.022	31.30	4	2.2
3	0.38	38	2	2	4	0.049	14.30	7	4.9
4	0.67	67	3	3	7	0.087	7.90	13	8.7
5	1.00	100	4	5	11	0.136	5.10	20	13.6
6	1.51	151	5	7	16	0.196	3.50	29	19.6
7	2.05	205	7	10	22	0.267	2.60	39	26.7
8	2.70	270	9	13	28	0.349	2.00	51	34.9
9	3.40	340	11	16	35	0.442	1.60	64	44.2
10	4.20	420	13	19	44	0.545	1.30	79	54.5
11	5.00	500	16	23	52	0.660	1.10	95	66.0
12	6.00	600	19	27	62	0.785	0.89	113	78.5
15	9.50	950	30	43	98	1.227	0.57	177	122.7
18	13.60	1360	42	61	140	1.767	0.39	255	176.7
20	16.80	1680	52	75	173	2.181	0.32	315	218.1
25	26.00	2600	80	117	267	3.409	0.20	491	340.9
30	38.00	3800	117	170	390	4.909	0.14	707	490.9
60	152.00	15200	468	679	1559	20.322	0.04	2500	2032.2

* Number of bags has been rounded up to the next whole bag.

Yield Calculations:

Neat Cement: One 94 lb bag plus 6 gallons of water equals 9.75 gallons of grout
Benseal: One 50 lb bag plus 10 oz. of E-Z Mud plus 30 gallons water equals 32.5 gallons of grout
Enviroplug: One 50 lb bag plus 2.5 lb of activator plus 20 gallons of water equals 22.4 gallons of grout

Holeplug is a granular bentonite product, $^3/_8$"– $^3/_4$" in size that is poured, not pumped, into a well.

Table based on product information published by NL Baroid, Wyo-Ben. Inc., and Chemgrout Inc.

Appendix 3

List of Acronyms

ASTM	-	American Society for Testing and Materials
API	-	American Petroleum Institute
BUSTR	-	Bureau of Underground Storage Tank Regulations
DDAGW	-	Division of Drinking and Ground Waters
EPA	-	Evironmental Protection Agency
OAC	-	Ohio Administrative Code
ODA	-	Ohio Department of Agriculture
ODH	-	Ohio Department of Health
ODNR	-	Ohio Department of Natural Resources
ORC	-	Ohio Revised Code
PWSP	-	Private Water System Program
UIC	-	Underground Injection Control

Appendix 4

Sealing Monitoring Wells and Boreholes[1]

Boreholes that are not completed as monitoring wells and monitoring wells that are no longer being sampled or used for ground water level measurements must be sealed properly to: 1) prevent poor quality water from one saturated zone entering another, 2) prevent contamination of the ground water by surface contaminants, 3) restore an aquifer to as close to its original condition as possible, 4) eliminate physical hazards, and 5) reduce potential for future liability. A suitable program should be designed and implemented to meet these objectives.

The sealing material and the method of sealing depend on: 1) the design and construction of the well/borehole, 2) hydrogeologic conditions, 3) chemical environment, 4) safety hazards and 5) disposal of contaminated materials removed. In general, well sealing should consist either of a method for well removal and simultaneous grouting of the borehole with bentonite, neat cement, or a method for grouting in-place that ensures complete sealing.

Sealing Materials

The chosen sealing material should:

- Not react with contaminants, ground water, or geologic materials.
- Have a hydraulic conductivity comparable to or lower than that of the in-situ material.
- Form a tight bond with the borehole wall and the casing.
- Be resistant to cracking and/or shrinking.
- Be of sufficient structural strength to withstand subsurface pressures.
- Be capable of being placed at the appropriate depth.

No single material will exhibit all of the characteristics mentioned above. Therefore, every situation must be evaluated carefully to determine the appropriate choice. Generally, materials used are comprised of concrete, neat cement, or sodium bentonite.

Most wells completed in unconsolidated formations or non-creviced rock may be satisfactorily sealed with neat cement or bentonite. Wells that penetrate limestone or other creviced or channeled rock formations should be filled with concrete grout or neat cement to ensure seal permanence. The use of fine-grained materials to seal creviced rock may not be desirable because the materials might be displaced by flow of water through crevices (American Water Works Association, 1984). Neat cement or sodium bentonite should be used for sealing an abandoned well/borehole below the water table (Gordon, 1988). Pure sodium bentonite placed above the water table should be hydrated if it is not installed in slurry form due to the lack of water for hydration of pellets or chips. At no time should a borehole or well be backfilled with cuttings or with any materials of unknown integrity. However, in some geologic environments, such as coarse gravel, where excessive loss of sealing materials may occur, or when grout may affect the water quality of nearby monitoring wells, clean sand or gravel in conjunction with regular materials can be used (Gordon, 1988; Kraemer et al., 1991).

Procedures

Planning

Careful review should be conducted prior to sealing monitoring wells. This may include:

- Review of records pertaining to well construction and repair or modifications.
- Review of all analytical chemical data for soil and ground water.
- Review of the hydrogeologic/geologic characteristics in the vicinity of the well.
- Current conditions of the well such as total depth, amount of siltation, etc.

---

[1] The information in this section is from Chapter 9 of the Ohio Environmental Protection Agency's "Technical Guidance Manual for Hydrogeologic Investigations and Ground Water Monitoring", 1995.

If a well is to be left in place, borehole geophysical techniques may be helpful in determining its integrity. This may include caliper logs to measure inside diameter; television logs to identify casing breaks, screen size, etc.; gamma logs to verify geologic information; cement bond logs to determine if the casing is firmly attached to the grout; flow logs to determine if vertical flow occurs within the casing; and hydraulic integrity tests to determine if the casing is intact (ASTM, 1993).

Prior to the sealing of monitoring wells, it is recommended that a work plan detailing the procedures/methods be submitted to the appropriate regulatory authority[2]. The information should include:

- Reasons for sealing.
- Identification and location coordinates.
- Casing diameter and material.
- Screen material, length, and depth.
- Total depth.
- Geologic materials opposite well screen.
- Drilling log and construction diagrams.
- Type and concentrations of contaminants present[3], if any.
- Procedure for disposal of any contaminated soil, well construction material, and water.
- Method for sealing.
- Type of sealing material.
- An estimation of the volume of sealing material needed.
- Measures to protect the health and safety of individuals.

Field Procedure

Monitoring wells have often been sealed by pulling the surface casing where possible, followed by pouring cement or bentonite into the hole. This procedure is inappropriate, especially if the construction of the well is unknown or the well intake spans more than one saturated zone. Incomplete seals may form due to bridging. Additionally, the procedure has little effect on the filter pack, which may allow communication between saturated zones.

The following basic procedure is recommended for sealing monitoring wells and boreholes. Steps 1 and 2 are not necessary for sealing exploratory boreholes. It should be understood that no single method and material are suitable for all situations. Site-specific characteristics may merit modifications or procedures not discussed below. Additional information can be found in the references listed.

1. Inspect the well and remove any obstacles (i.e., pumps, pressure lines, other debris, etc.) that may interfere with the placement and performance of the sealing material. If necessary, a camera survey can help to identify the depth and construction of the well if this information is not known. The outer protective casing should be removed.

2. Since the primary purpose of sealing is to eliminate vertical fluid movement, it is strongly recommended that the casing and screen be removed and the boring be overdrilled to remove the annular seal and filter pack, unless it can be determined that the original grout seal is intact. When the well is removed, there is less concern about channeling in the annular space or an inadequate casing/grout seal (Aller et al., 1991). The casing and well screen can be removed by pulling or bumping the casing, overdrilling around the casing using a hollow stem auger, or drilling out the well using a solid stem auger or rotary bit. The method used should depend on the type, length, and diameter of the casing, conditions of the annular seal, and site geology. Aller et al. (1991) and ASTM 5299-92 provided a discussion on various removal techniques. The borehole should be overdrilled using a bit with a diameter at least $1^1/_2$ times greater than the original diameter of the borehole. Drilling should

---

[2] If a regulated entity is conducting a hydrogeologic investigation or a ground water monitoring program, a well sealing work plan should be submitted prior to initiating the program. In this situation, a separate workplan is not necessary.

[3] If contamination was detected or suspected in the original well or boring, appropriate health and safety requirements should be followed.

be slightly deeper than the original depth to assure complete removal. To achieve an effective seal, the borehole should be cleared of any excess mud filtercake.

In some instances, such as when safety problems occur, or when dealing with large diameter wells, casing removal can be difficult. If the well construction is known, the screen and filter pack do not span more than one saturated zone, and circumstances prevent complete removal of casing and screen, then the following procedure can be used (based on Renz, 1989):

a. The well can be filled with clean silica sand to one foot above the screen in the event that the screened area is adjacent to a highly permeable formation.

b. One foot of bentonite pellets can be placed above the screen in a manner that prevents bridging (i.e., through a tremie pipe or by tamping after installation).

c. The pellets should be hydrated.

d. To allow the sealant to permeate and be effective, the casing should be perforated to one foot above the bentonite seal either by splitting it vertically (synthetic casing) or by making horizontal cuts every two feet with retractable blade (steel casing).

3. The borehole should be pressure grouted using a tremie pipe as the drilling stem is removed. The sealant should be applied in one continuous procedure to prevent segregation, dilution, and bridging (Aller et al., 1991). The pipe should be in constant contact with the sealant to prevent air pockets from forming. The borehole should be sealed from the bottom up to the frost line (approximately two to three feet from the surface). The overflowing grout should be regularly evaluated as it reaches the surface. When the observed material is similar to that being pumped in, this stage of the sealing is considered complete. Wells sealed in-situ should be sealed from the bottom up to approximately five feet from the surface.

4. The grout plug should be inspected 24 hours after installation to check for settling and grout should be added if needed. If the well is sealed in place, the casing should be cut off approximately five feet below ground level and a PVC or stainless steel cap should be emplaced. The boring should be grouted to within two to three feet from the surface with appropriate material. Monitoring wells sealed in place should be marked with a piece of metal to allow for location by a metal detector or magnetometer (Aller et al., 1991).

5. The remaining area above the plug should be completed in a manner that is compatible with the site. For example, its top can be covered with one to two feet of soil if vegetative growth is desired. If the area is to be surfaced, then the final seal can be completed with cement or concrete.

6. Proper sealing of monitoring wells should be documented and reported to the implementing regulatory agency managing the site. The information should include, at a minimum:

- Identification (e.g. registration number, location, owner, other features).
- Well construction details.
- Date, time, person responsible, and contractor/consultant performing the work.
- Authority under which the sealing was performed.
- Procedures and materials used.
- Method/procedures for disposal of any contaminated materials.

Additionally, Ohio Revised Code 1521.05(B) requires that a well sealing report be filed with the Ohio Department of Natural Resources (ODNR) on forms supplied by the Department. Figure A is an example of this form. It can be obtained from ODNR, Division of Water (614-265-6739).

APPENDIX B. QUALITY ASSURANCE PROGRAM PLAN

QUALITY ASSURANCE PROJECT PLAN
FOR THE
REMEDIAL DESIGN/REMEDIAL ACTION
FORD ROAD LANDFILL

AUGUST 2009

Prepared for:

Ford Road Landfill Settling Parties

Prepared by:

Brown and Caldwell
4700 Lakehurst Court, Suite 100
Dublin, Ohio 43016

137335.300.050

TABLE OF CONTENTS

1. INTRODUCTION....1
1.1 Site Background....2
1.2 Previous Investigations....3
2. PROJECT ORGANIZATION AND PERSONNEL RESPONSIBILITIES....4
2.1 Primary Contractors....4
2.2 Other Contractors....4
3. QUALITY ASSURANCE OBJECTIVES....6
3.1 Data Quality Objectives (DQOs)....6
3.2 Project Quality Objectives (PQOs)....6
3.2.1 Who Will Use the Data?....6
3.2.2 What Will the Data Be Used For?....6
3.2.3 What Type of Data are Needed?....6
3.2.4 How "Good" do the Data Need to be in Order to Support the Environmental Decision?....7
3.2.5 How Much, Where, and When will the Data be Needed?....7
3.2.6 How Should the Data be Collected or Generated?....7
3.2.7 Who Will Collect and Generate the Data?....7
3.2.8 How Will the Data be Reported?....8
3.2.9 How Will the Data be Archived?....8
3.3 Comparison Criteria....8
3.4 Analytical Data Quality Categories....8
3.5 QA/QC Characteristics....9
3.5.1 Precision....9
3.5.2 Accuracy....10
3.5.3 Representativeness....11
3.5.4 Completeness....11
3.5.5 Sensitivity....11
3.6 Impact of Failure to Meet Data Quality Objectives....11
3.7 Data Usability and Reconciliation with User Requirements....12
4. INVESTIGATION ACTIVITIES AND SAMPLING PROCEDURES....15
4.1 Geotechnical Investigation....15
4.1.1 Geoprobe® Borings....15
4.1.2 Perimeter Soil Borings....16
4.1.3 Hammer Drill Borings....16
4.1.4 Survey....16
4.1.5 Decontamination....17
4.2 Contingency Investigations....17
4.2.1 Monitoring Well Installation....17
4.2.2 Groundwater Sampling....18

4.2.3 Monitoring Well Abandonment 18
4.2.4 Post Excavation Sampling for Alternative A During the RA 18
4.3 Investigation Derived Waste Management 18
4.4 Decontamination Procedures 19

5. SAMPLE CUSTODY AND DOCUMENTATION 21
5.1 Sample Identification System 21
5.2 Sample Custody, Packaging, and Shipping 22
5.2.1 Field Custody 22
5.2.2 Sample Containers and Preservatives 23
5.2.3 Sample Shipping Procedures 23
5.2.4 Laboratory Custody Procedures 24
5.3 Sample Documentation 24
5.3.1 Field Logbooks 24
5.3.2 Field Investigation Forms 25
5.3.3 On-Site Screening Analysis Records 25

6. LABORATORY REQUIREMENTS AND PROCUREMENT OF LABORATORY SERVICES 27
6.1 Analytical Laboratory Services 27
6.2 Geotechnical Laboratory Services 27

7. ANALYTICAL AND GEOTECHNICAL DATA HANDLING, REVIEW, AND REPORTING 28
7.1 Data Reduction 28
7.1.1 Field Data Reduction 28
7.1.2 Analytical Laboratory Data Reduction 28
7.1.3 Geotechnical Laboratory Data Reduction 29
7.1.4 Project Data Reduction 29
7.2 Data Review 29
7.2.1 Methodology 29
7.2.2 Data Verification Summary for Analytical Sample Results 30
7.2.3 Reconciliation with Data Quality Objectives 30
7.3 Data Reporting 30
7.3.1 Contents of Laboratory Data Reports 31
7.3.2 Data Presentation in the Remedial Design Report 31

8. QUALITY ASSURANCE/QUALITY CONTROL SAMPLE REQUIREMENTS 33
8.1 Field Quality Control Samples 33
8.1.1 Field Environmental Duplicate Samples 33
8.1.2 Field Blanks 33
8.1.3 Trip Blanks 33
8.1.4 Cooler Temperature Blanks 34
8.2 Laboratory Quality Control Samples 34
8.2.1 Method Blanks 34
8.2.2 Matrix Spike/Matrix Spike Duplicates 34
8.2.3 Surrogate Compounds 34
8.2.4 Internal Standards 34

8.2.5 Laboratory Control Samples 35
8.2.6 Laboratory Duplicate Samples 35
8.2.7 Interference Check Samples 35

9. INSTRUMENT CALIBRATION AND PREVENTIVE MAINTENANCE 37
9.1 Instrument Calibration 37
9.1.1 Field Instrumentation 37
9.1.2 Analytical Laboratory Instrumentation 37
9.2 Preventive Maintenance 38
9.2.1 Field Instrumentation 38
9.2.2 Laboratory Instrumentation 38

10. SUPPLIES AND CONSUMABLES 40

11. PROJECT ASSESSMENTS 41
11.1 Project Readiness Audit 41
11.2 Surveillances 41

12. TRAINING OF PROJECT STAFF 42
12.1 General Personnel Training 42
12.2 Quality Assurance Training 42
12.3 Technical Training 42

13. CORRECTIVE ACTION 43

14. QUALITY ASSURANCE REPORTS TO MANAGEMENT 44

15. REFERENCES 45

FIGURES 45

ATTACHMENT A. UFP – QAPP WORKSHEETS .... A

ATTACHMENT B. ANALYTICAL LABORATORY QA MANUAL AND SOPS .... B

ATTACHMENT C. GEOTECHNICAL LABORATORY QA/QC MANUAL AND ASTM STANDARDS C

1. INTRODUCTION

This document presents the Quality Assurance Project Plan (QAPP) for data collection activities associated with remedial design (RD) and remedial action (RA) at the Ford Road Landfill (the Site). This QAPP also anticipates activities that may be needed during the remedial action (RA) to limit the need for future updates to the QAPP. This QAPP has been prepared on behalf of the Ford Road Landfill Settling Parties (Settling Parties). This work associated with the RD/RA is being performed in accordance with the Consent Decree (CD) and Statement of Work (SOW) entered by the Court on February 18, 2009 and the Record of Decision (ROD) for the Site, dated September 27, 2006.

The purpose of the data collection associated with this QAPP is to complete all required investigation activities at the Site in support of the RD/RA, although update of the QAPP may be required at various stages of the RD/RA to allow for the addition of field activities that have not been anticipated at this time. Data collection activities include collecting physical and geotechnical data from portions of the top, flanks and perimeter of the landfill to evaluate cover soil thickness and slope stability, investigating exposed waste along the north slope of the landfill, investigating waste observed south of the southern footprint of the landfill, and evaluating the light non-aqueous phase liquid (LNAPL)-impacted soil near the northeast corner of the landfill. The RD will provide a permanent solution that contains the waste, addresses slope stability, and erosion control while being protective of human health and the environment. This QAPP is prepared as an appended document to the Remedial Design Work Plan (RDWP) (Brown and Caldwell, 2009), as are a Field Sampling Plan (FSP) and site-specific Health and Safety Plan (HASP).

This QAPP has been prepared to define the quality assurance (QA) and quality control (QC) activities to be implemented, the integrity of the work to be performed at the Site, and the type and quality of data collected relative to its intended use. This Plan has been prepared and reviewed in accordance with The Uniform Federal Policy for Implementing Quality Systems (UFP-QS) [EPA-505-F-03-001] (IDQTF, 2005a), and the Uniform Federal Policy for Quality Assurance Project Plans (UFP-QAPP), [EPA-505-B-04900A through C] (IDQTF, 2005b). Accordingly, the completed 37 QAPP Worksheets contained in the "Workbook for Uniform Federal Policy for Quality Assurance Project Plans" are included in Attachment A. This relatively new U.S. Environmental Protection Agency (USEPA) QAPP guidance (finalized in 2005) has been designed to streamline the USEPA's review of the QAPPs by placing the majority of the required components onto standard Worksheets.

The specific subjects addressed by the QAPP include the following:

- Description of Project
- Organization and Responsibilities of Project Personnel
- Project Objectives, including QA Objectives for Data
- Field Sampling Program and Procedures
- Sample Custody, Packaging and Shipping
- Sample Documentation
- Sample Analytical Program
- Data Reduction, Verification, Assessment, and Reporting

- QA/QC Requirements and Procedures
- Calibration and Maintenance of Instrumentation
- Requirements for Supplies and Consumables
- Assessment of Project Procedures
  - Training of Project Staff
  - Corrective Action
  - QA Reports to Management

The scope of field work and data collection anticipated for the remedial design and interim action activities, as described in the RDWP and FSP, focuses on geotechnical testing and liquid level measurements from existing monitoring wells on Site. However, this QAPP also addresses the various analytical testing that could potentially be needed during the RD/RA. In this manner, significant revision to the QAPP will not be needed if the scope expands over time and as the RD/RA is completed

Worksheets, which further document the required elements of this QAPP, are referenced as appropriate in the text sections, and are provided in Attachment A. Worksheets No. 1 and No. 3 contain the approval and distribution list for this QAPP, respectively. Identifying information in regard to this document, including a cross-reference guide between text sections and Worksheets for specific QAPP elements/information, is provided in Worksheet No. 2 (Attachment A).

1.1 Site Background

The Site is a 15-acre inactive facility located in the City of Elyria within Lorain County, Ohio. The Site is located on the northern edge of Elyria adjacent to Ford Road, about 1.5 miles from interchange 8 of the Ohio Turnpike/Interstate 90 (Figure 1-1). There are approximately 2,500 people living within a one-mile radius of the Site. The nearest resident is approximately 200 feet northwest of the Site. The current owner of the Site is the Lorain County Metropolitan Parks District (the Park District).

An intermittent stream and a sewer main that is covered with rip-rap are present to the north of the landfill and a ravine and rural land are present to the south. The Black River is located relatively close to the east side of the landfill and the west side is bordered by Ford Road, and beyond Ford Road to the west is the Black River Preserve (a Park District Park). The approximate geographic coordinates of the Site are 41° 22' 26.0" N latitude and 082° 07' 30.0" W longitude. The USEPA spill identification number is 0574, and the USEPA facility identification number is OHD 980510002. Figure 1-2 presents a site plan indicating Site features and previous sample locations.

The RI/FS and the ROD conclude that the slopes at the former landfill appear to be stable. The steeper slopes at the landfill have remained in their current position for more than 35 years without evidence of slope failure aside from minor solifluction and slumping of surface soil. The majority of the former landfill appears to have an adequate cover of low-permeability soil. Landfill wastes are largely covered, with the exception of some wastes, miscellaneous debris, and white goods that are located along the southern and northern landfill flanks. The landfill top is well graded and gently slopes southwest to northeast. A portion of the eastern side slope has a grade of approximately 2:1, horizontal to vertical (H:V), while the northern and southern portions of the east side slopes and the north and south side slopes are steeper, with maximum grades of approximately 1.2:1. The upper, gently-sloping portion of the landfill supports a dense growth of grass that is well maintained. The side slopes are generally covered with a dense growth of mature trees.

Prior to the start of landfill activities, the area sloped gently toward the river and included a wider flood plain than what is currently present. Much of the sloped area has been filled to approximately the same level as Ford Road, and a portion of the flood plain was incorporated into the landfill. Land-filling activities are

believed to have begun with the placing of local municipal waste extending east from Ford Road in the early 1900s. The Site operated as a public landfill, charging tipping fees, until 1964. The Site was leased in 1964 and operated by several entities as a landfill until June 1974. During operation of the landfill in the 1960s and 1970s, municipal and industrial wastes in drums and in bulk were accepted, including, but not limited to: 700 tons of hazardous material; 3.3 million pounds of chemical wastes; and sludge (reportedly 32,000 gallons per day), from 1963 to 1970. Many of these wastes were burned onsite. Foundry sand, slag, and dried sludges were often used for cover material. Landfill operations ended in 1974.

Environmental officials conducted several investigations over the years at the Site and found that leachate was seeping from the landfill. Leachate was found to be discharging into the Black River by Ohio EPA (OEPA) and the Elyria City Department of Health during an inspection completed in 1972. The leachate was sampled in 1980 and found to contain a variety of potentially hazardous substances.

In 1980, with the approval of USEPA and the Park District, a former operator implemented a voluntary response action involving the addition and grading of cover soil (including placing up to 7.5 feet of low-permeability cover materials) to intercept and contain reported observations of leachate emanating from the Site. In addition, some refuse observed near the river was removed and transported to the Lorain County Landfill.

On March 8, 1993, a USEPA contractor, PRC Environmental Management, Inc. (PRC), inspected the Site. PRC found a leachate seep draining toward the Black River near the northeast corner of the Site. On May 18, 1993, PRC sampled soil, surface water, sediment and groundwater at the Site. PRC completed an Expanded Site Inspection report dated January 10, 1994, discussing the results of their investigation and previous investigations.

During July 2002, USEPA Region 5 and the Settling Parties entered into an Administrative Order on Consent which required the Settling Parties to conduct a Remedial Investigation and Feasibility Study (RI/FS) to investigate the nature and extent of contamination at the Site and develop and evaluate potential remedial alternatives pursuant to 40 CFR Part 300.430. The RI/FS was performed by Blasland, Bouck & Lee, Inc. (BBL) between 2003 and 2006 and was approved by USEPA in May 2006. USEPA executed a ROD in September 2006 and a CD and SOW were negotiated during late-2008. The CD was lodged on December 30, 2008 and was entered by the Court on February 18, 2009.

1.2 Previous Investigations

Several environmentally-related investigations have been conducted at the Site over the years. These investigations are described in the RWDP and are summarized in the following reports:

- Sanitary Landfill Inspection, OEPA, 1972;
- Site Inspection Report, Ecology & Environment (for USEPA), 1980;
- Laboratory Data Reports, USEPA, 1980;
- Potential for Groundwater Contamination, Ecology & Environment (for USEPA), 1981;
- Preliminary Assessment Report, Ecology and Environment (for USEPA), 1983;
- Site Inspection Report, Ecology & Environment (for USEPA), 1983;
- Expanded Site Inspection Report, PRC (for USEPA), 1994;
- BFI Landfill Gas Monitoring, 1989-1994; and
- Remedial Investigation/Feasibility Study (RI/FS) Report, BBL, 2006.

The RI/FS Report (BBL, 2006) documents the most recent and comprehensive of the previous investigations, and has been relied upon in developing the RDWP and this QAPP to identify the data needs to complete the remedial design. The RI/FS Report and RDWP have also been relied upon for obtaining basic Site history and other background information.

2. PROJECT ORGANIZATION AND PERSONNEL RESPONSIBILITIES

2.1 Primary Contractors

The primary contractors retained by the Settling Parties are listed as follows:

- Steerman Environmental Management & Consulting, LLC (SEMC). – Mr. Patrick Steerman of SEMC will serve as the as Project Coordinator and is responsible for overall management, coordination, and communication among the Settling Parties, Brown and Caldwell and the other contractors, and the agencies.
- Brown and Caldwell (BC) – BC will serve as the CD defined Supervising Consultant/Engineer for pre-design, interim action, remedial design, engineering, and other technical issues.

Responsibility for maintaining QA/QC during the interim action, pre-design and remedial design activities principally lies with the BC Project Manager (PM) and QA Officer, although proper implementation of QA/QC requires that the entire project staff is cognizant of appropriate procedures and goals. An organization structure has been developed to identify the roles and responsibilities of the various personnel involved with the Site. The structure for this project includes USEPA, the Settling Parties, BC, and other subcontractors. Project organization and responsibility functions, along with communication pathways and qualifications, are presented in Worksheet Nos. 4 through 7 in Attachment A.

USEPA Region 5 is the lead agency overseeing the activities occurring at the Site. BC will provide support to the Settling Parties., and will receive technical and cost direction solely from the Settling Parties or Mr. Steerman (as the Settling Parties' representative), and the Settling Parties and/or Mr. Steerman will be responsible for obtaining any access approvals needed by BC or their subcontractors to perform various field activities.

2.2 Other Contractors

Other contractors may be retained to provide various services, typically under subcontract to BC, as described below:

- Analytical Laboratory - The analytical laboratory subcontractor will provide analytical services for solid and aqueous media. They will be responsible for providing sample bottles and preservatives (as necessary) and providing laboratory analysis and appropriate data reporting. BC intends to subcontract TestAmerica in North Canton, Ohio as the analytical laboratory. TestAmerica (previously STL) was the analytical laboratory subcontracted by BBL for the RI/FS and have provided BC with the analytical laboratory-related input for this QAPP.
- Geotechnical Laboratory - The geotechnical laboratory subcontractor will provide geotechnical testing for solid media. They will be responsible for identifying the proper volume and sample container (Shelby tube, bulk, etc.) for the field samples and for adhering to the appropriate ASTM or other methodology for testing the samples. BBC&M has provided the geotechnical laboratory-related input for this QAPP.

- Drilling Services - The drilling subcontractor will be responsible for acquiring drilling permits, utility clearances, and supplying services (including labor, equipment, and materials) required to perform the drilling activities, including soil borings, collection of subsurface soil samples, monitoring well abandonment, and monitoring well installation and development. They will also be responsible for the maintenance and quality control of the equipment needed to perform those activities. The drilling subcontractor will be responsible for containerizing and transporting investigation-derived waste (IDW) from remote locations to the on-site storage area. The drilling subcontractor will also be responsible for following equipment decontamination procedures. Upon completion of the work, the drilling subcontractor will be responsible for decontaminating all equipment prior to demobilizing from the Site. Monitoring well installation and abandonment activities will be in accordance with the applicable state and federal guidance and regulations.
- Surveying Services - The survey subcontractor will be licensed in Ohio and will be responsible for supplying services (including labor, equipment, and materials) required to provide land survey data as required, including the horizontal coordinates and vertical elevations of the ground surface for sample locations, and other locations as indicated by BC.
- Waste Disposal Services - The waste disposal subcontractor will be responsible for supplying services (including labor, equipment, and materials) required to perform the off-site transportation and disposal of aqueous and non-aqueous IDW residuals. The subcontractor will be appropriately licensed and insured and will dispose of all IDW residuals at licensed facilities approved by BC and the Settling Parties.

3. QUALITY ASSURANCE OBJECTIVES

Quality assurance objectives have been developed in a systematic process as part of the QAPP as presented in Worksheet Nos. 9, 10 and 11 (Attachment A) and in the following sections.

3.1 Data Quality Objectives (DQOs)

Implementation of pre-design and interim action activities as specified in the RDWP focuses on satisfying the following Data Quality Objectives (DQOs):

- To evaluate the nature and thickness of cover material atop the landfill and define those areas, if any, with less than two feet of cover soil;
- To identify and define waste materials outside the footprint of the landfill;
- To evaluate and establish slope stability of the landfill, including erosion control, in accordance with applicable regulations and standard engineering principals;
- To define the limits of impacted soils in the northeast corner of the Site and design a permanent remedy for that area that is protective of human health and the environment; and

3.2 Project Quality Objectives (PQOs)

Specific project quality objectives (PQOs) have been developed through a systematic planning process. These are statements intended to clarify the project's objectives; define the appropriate type of data and acceptance/performance criteria, including where, when, and how many samples to be collected, and if required, specify the tolerable levels of potential decision errors. The PQOs are discussed in the following subsections.

3.2.1 Who Will Use the Data?

Data will be used by the Settling Parties, their contractors, USEPA and OEPA.

3.2.2 What Will the Data Be Used For?

- The data will be used to evaluate the aforementioned DQOs listed in Section 3.1 and to develop a RD that meets the requirements of the CD, SOW and ROD. The project Performance Standards are those described in the SOW;
- Analytical sensitivity must be adequate to detect and quantify the concentrations of each of the listed constituents to the concentrations of their respective action levels;
- The data will be used to define the limits of the landfill, evaluate the thickness of the cover soil, evaluate slope stability, and to define the limits of excavation in the LNAPL-impacted area.

3.2.3 What Type of Data are Needed?

- Groundwater quality data are needed for the parameters, well locations, and monitoring frequency as stated in the FSP;

- Groundwater/LNAPL elevation and thickness data are needed from the wells and at the frequency as stated in the FSP;
- Soil/waste quality data are needed for the parameters and locations described in the FSP;
- Geotechnical data are needed for the parameters and locations described in the FSP;
- Waste characterization data are needed for the parameters and wastes described in the FSP; and
- Survey data are needed for the locations described in the FSP.

3.2.4 How "Good" do the Data Need to be in Order to Support the Environmental Decision?

A primary Measurement Performance Criterion is adequate analytical sensitivity to meet the Performance Standards listed on Worksheet No. 15 in Attachment A.

3.2.5 How Much, Where, and When will the Data be Needed?

- The spatial distribution of the data is specified in the FSP;
- The temporal distribution of the data is specified in the FSP; and
- The specific analytical and geotechnical parameters to be tested for are specified in the FSP.

3.2.6 How Should the Data be Collected or Generated?

- The aqueous media samples (e.g., groundwater, etc.) destined for chemical analysis will be collected using the procedures specified in the FSP;
- The specified aqueous media samples will be analyzed by TestAmerica Laboratories, Inc. (TestAmerica) following SW846 analytical methodologies and SOPs as presented in Attachment B;
- Groundwater and LNAPL thickness and elevation data will be determined from depth to liquid field measurements using electronic water level meters/interface probes and survey data;
- The solid media samples (soil, waste, etc.) destined for chemical analysis will be collected using the procedures specified in the FSP;
- The specified solid media samples will be analyzed by TestAmerica following SW846 analytical methodologies and SOPs presented in Attachment B;
- Geotechnical samples will be collected in the appropriate containers using those procedures described in the FSP and tested by the geotechnical laboratory in accordance with the appropriate ASTM Standards presented in Attachment C; and
- Survey data will be obtained by a licensed Ohio surveyor in accordance with the required horizontal and vertical accuracy.

3.2.7 Who Will Collect and Generate the Data?

- Qualified personnel from BC will collect the aqueous and solid media samples, with the appropriate assistance provided by the drilling services subcontractor;
- Qualified personnel from BC will collect the geotechnical samples, with the appropriate assistance provided by the drilling services subcontractor;
- Qualified personnel from TestAmerica will perform the analytical laboratory analyses and provide the analytical data;

- Qualified personnel from the geotechnical laboratory will perform the geotechnical laboratory testing and provide the geotechnical data;
- Qualified personnel from the subcontracted surveying company will perform the survey activities and provide the survey data; and
- Qualified personnel from BC will obtain depth to liquid level measurements.

3.2.8 How Will the Data be Reported?

- Field data will be recorded and reported as specified in the FSP;
- Laboratory analytical data will be reported to BC in two formats:
- Laboratory summary report including sample results, a case-narrative, and a QA summary report.
- Electronic data deliverable (EDD) of the aforementioned in a BC-specified format;
- Geotechnical data will be reported to BC in hard copy format, including all calculation sheets;
- Survey data will be reported to BC in both hard copy and electronic format, and will include three columns of data: the northing coordinate, the easting coordinate, and the elevation (MSL-mean sea level); and
- Data will be reported to USEPA as appendices to the RD submittals, with the data summarized in tables contained within the body of the report. An electronic version of the complete report, in PDF format, will also be provided.

3.2.9 How Will the Data be Archived?

- Aforementioned electronic files will be maintained in their native formats on a server located in BC's Columbus, Ohio office;
- Tape backups of the files on the servers are made periodically which will be stored at an off-site location for a minimum of ten years, as required in the CD; and
- A paper copy of the complete Remedial Design Report and associated project file will be maintained either at the BC office in Columbus, Ohio or an off-site document repository for a minimum of 10 years, as required in the CD.

3.3 Comparison Criteria

Analytical data results will be compared to the Performance Standards described in the SOW (Worksheet No. 15 in Attachment A). Samples analyzed for those constituents listed in Worksheet No. 15 must be analyzed with sufficient sensitivity to have detection limits at, or below, the standards presented.

3.4 Analytical Data Quality Categories

Analytical PQOs, also called measurement performance criteria, are composed of written expectations for precision, accuracy, representativeness, comparability, and completeness of a data set. Additional QA/QC requirements to satisfy analytical PQOs for the project include sensitivity of the analytical methods (detection limit verification) and blank contamination evaluation. The PQO process provides a logical basis for linking the QA/QC procedures to the intended use of the data, primarily through the decision maker's acceptable limits on decision error. Two descriptive data categories – field/screening data and analytical data - will be used for the Site.

Field/screening data are generated in the field, and are not critical to project objectives. QA/QC elements associated with screening data include sample documentation and calibration. Portable instruments to be used during the field investigation to collect screening data include:

- Temperature meter;
- pH meter;
- Turbidity meter;
- Specific conductivity meter; and
- Other parameters associated with groundwater sample collection.

Analytical data are generated from analysis of samples collected at the Site and have satisfied known QA/QC acceptance or performance criteria requirements. Analytical result data provided by the laboratory are critical to project objectives. QA/QC elements of definitive data include determination and documentation of calibrations, detection limits, method blanks, controls, and matrix spike recoveries. Additional information on analytical QC sample elements and their acceptance criteria is provided in Worksheet No. 12 (Attachment A).

3.5 QA/QC Characteristics

The overall QA/QC objective for data collection activities from the Site is to provide data of known and documented quality and sensitivity, allowing comparison to the Performance Standards described in the SOW, through the use of developed and implemented procedures. Quality characteristics for data are determined by the evaluation of the precision, accuracy, representativeness, comparability, and completeness of the analytical results, sensitivity of method/detection limit verification, and blank contamination quantitation and minimalization. Data quality objectives for each of these parameters are determined based on the level of data required. Descriptions of these characteristics are provided below, and specific QA/QC objectives for both screening and definitive data are presented on Worksheet No. 12 (Attachment A), including matrices and methods.

3.5.1 Precision

Precision is the measurement of agreement in repeated tests of the same or identical samples, under prescribed conditions. Precision data indicate how consistent and reproducible the field sampling or analytical procedures have been. Analytical precision can be expressed in terms of Relative Percent Difference (RPD) or Relative Standard Deviation (RSD).

When only two aliquots of a sample are analyzed, either two representative portions from a single field location or two aliquots of a prepared sample at the laboratory, these samples are referred to as "duplicates." Duplicate precision is evaluated by calculating the RPD between the concentrations of the two samples, and the smaller the RPD, the greater the precision. RPDs are calculated using the following equation:

$$\underline{RPD =} \quad \frac{\underline{|\ Vo - Vd\ |}}{\underline{0.5\ (Vo + Vd)}} \ \underline{x\ 100}$$

Where: Vo is the original sample concentration value and Vd is the duplicate sample concentration value.

When three or more aliquots are analyzed, these samples are referred to as "replicates," and replicate precision is evaluated by calculating the RSD. RSD, also known as the coefficient of variation, is calculated using the following equation, and the smaller the RSD, the greater the precision:

$$RSD = \frac{SD}{Mean} \times 100$$

Where: SD is the Standard Deviation, and is calculated by:

$$SD = \sqrt{\frac{\sum_{i=1}^{n} (x_i - \overline{x})^2}{n - 1}}$$

Where: x_i is each individual value used for calculating the mean; x is the mean of *n* values; and *n* is the total number of values.

The precision of analytical environmental samples has two components - laboratory precision and sampling precision. Laboratory precision is determined by measurements of laboratory duplicates/replicates and by analysis of reference materials. The objectives for laboratory precision are specified in the analytical methodologies and are presented on Worksheet No. 12 (Attachment A).

The precision of the field sampling effort is determined by the analysis of field duplicate samples; (see Section 8.1.1). Field duplicate analysis will be performed at a rate of no less than one duplicate for every 20 samples per matrix, and acceptance criteria for these duplicates will be an RPD of 50 percent for aqueous samples and 100 percent for solid samples.

The precision limits provided in Worksheet No. 12 for the screening measurements are acceptance criteria for duplicate and calibration analyses of field measurement parameters.

3.5.2 Accuracy

Accuracy is the degree of agreement of a measured sample result or average of results with an accepted reference or true value. It is the quantitative measurement of the bias of a system, and is expressed in terms of percent recovery (%R). Measurements of accuracy for the laboratory include surrogate spike, laboratory control spike, matrix spike, and matrix spike duplicate samples. The laboratory must meet or exceed the control limit objectives, as stated in Worksheet No. 12 (Attachment A) and the applicable methodologies.

The analytical accuracy will be evaluated using %Rs, which are calculated as below:

For laboratory control spike or surrogate spike samples:

$$\%R = \frac{SSR}{SA} \times 100$$

Where: SSR is the spiked sample concentration value (measured value), and SA is the spiked concentration added (true value).

For matrix spike/matrix spike duplicate samples:

$$\%R = \frac{SSR - SR}{SA} \times 100$$

Where: SSR is the spiked sample concentration value, SR is the unspiked sample concentration value, and SA is the spiked concentration added.

3.5.3 Representativeness

Representativeness is the degree to which the results of the analyses accurately and precisely represent a characteristic of a population, a process condition, or an environmental condition. In this case, representativeness is the degree to which the data reflect the contaminants present and their concentration magnitudes in the sampled Site areas. Sample homogeneity and sampling/subsampling variability must be considered during project planning to obtain a higher degree of representativeness. Representativeness of data will be obtained through the proper selection of sampling locations and implementation of approved sampling and analytical procedures. Results from environmental field duplicate sample analyses can be used to assess representativeness, in addition to precision.

3.5.4 Completeness

Completeness is defined as the percentage of samples that meet or exceed all the criteria objective levels for accuracy, precision and detection limits within a defined time period or event. It is the measure of the number of data "points" which are judged to be valid, usable results. The objective for completeness for this field investigation is [95 percent], and will be calculated by dividing the number of usable data results (i.e., those results not considered to be "rejected" and/or those samples not able to be analyzed) by the number of possible data results (i.e., the total number of field samples collected), and then multiplying by 100 percent, as shown:

$$\% \text{ Completeness} = \frac{Dv}{Dt} \times 100$$

Where: Dv is the number of usable valid data values (i.e., all results not "rejected" during data verification and all samples able to be analyzed) and Dt is the total number of possible data values (i.e., both valid and rejected data values among all samples collected).

3.5.5 Sensitivity

Sensitivity is the ability of the analytical method or instrument to detect a target analyte at the level of interest. The method detection limit (MDL) is a statistically-derived value that represents a 99 percent confidence level that the reported instrument signal is different from a blank sample. The quantitation limit (QL) is the minimum concentration of an analyte that can be routinely identified by the laboratory, and is generally between three and ten times the MDL. Analytical methods are matrix-, moisture- and dilution-dependent. The sample quantitation limit (SQL) actually determined for a constituent for a specific sample may be higher than the QL due to these issues.

For the purposes of the sampling activities associated with this Site, the MDLs must be at or below the associated Performance Standards described in the SOW.

3.6 Impact of Failure to Meet Data Quality Objectives

The QA objectives presented in Worksheet No. 12 (Attachment A) represent the data quality necessary to meet the project's technical goals. The QA/QC efforts discussed in this QAPP focus on managing measurement error, and ultimately providing an understanding of the potential impact uncertainty may have on data usability of the measurement data for the project. QA objectives will be evaluated throughout the investigation effort to evaluate the results relative to compliance to the project stated objectives. If these objectives are not being met, the usability (i.e., the precision and/or accuracy) of the sampling data may be impacted. The severity of the impact to the data usability must consider the end use of the data, the

standards that the data are being compared to, and the reported concentration relative to the standard (e.g. estimated data result that is substantially less than the associated standard represents less of a usability impact than undetected data with detection limits greater than the standards or estimated data results very close to an associated standard).

3.7 Data Usability and Reconciliation with User Requirements

As the data verification tasks proceed and are completed, and QA objective evaluations are performed throughout the duration of the project, the usability of the data in meeting the stated project objectives will be continually assessed by the appropriate technical staff. Data verification and QA objective evaluations will be performed upon the receipt of each data deliverable. This data verification will culminate in the determination of the usability of the data in meeting the stated project data objectives. Limitations on the use of data collected for the project will be communicated to appropriate users. Decisions regarding the resolutions of the issues raised by the data users will be coordinated and documented by the BC PM in concert with the USEPA RPM, as appropriate.

4. INVESTIGATION ACTIVITIES AND SAMPLING PROCEDURES

This section provides an overview of the planned field investigation and sampling operations. The field program to be performed at the Site is summarized in Worksheet Nos. 14 and 18 in Attachment A. The project monitoring schedule is presented in Worksheet No. 16 in Attachment A. A comprehensive description of the proposed field investigation is provided in the RDWP, with detailed field procedures described in the FSP. A summary of the field investigation associated with the RDWP is provided below.

4.1 Geotechnical Investigation

The geotechnical investigation described in the RDWP and FSP consists of the following four tasks:

1. Geoprobe™ borings on top of the landfill;
2. Perimeter soil borings around the toe of the landfill;
3. Hammer drill borings on the side slopes of the landfill; and
4. Survey.

Field procedures associated with these four tasks are detailed in the FSP and summarized in the following sections.

4.1.1 Geoprobe® Borings

Two of the locations on the upper surface of the landfill showed a soil cover thickness of less than the two feet required by the ROD and SOW. These two locations are identified as borings FR-SB-23B and FR-SB-24A and are shown in red on Figure 3-1 of the FSP. The two identified locations with less than two feet of soil cover are within the limits of waste but close to the edge of waste. An investigation is needed to delineate the size and shape of the area surrounding each of the locations where insufficient soil cover has been identified, and to define the limit of waste in this area.

The locations of the soil borings will be chosen in a manner to minimize the total number of soil borings that must be completed, but will be of sufficient number to delineate the boundary of the area(s) where the cap thickness is less than two feet. A grid of soil borings will be used to identify the extent of the area(s) with insufficient soil cover. The initial boring grid will begin close to the location where insufficient cover was found. In locations where the edge of thinner cover is not identified, additional step-out borings will be completed until the edge is identified in all directions. The limit of waste will also be approximately identified to determine how far to extend the cap repairs in that direction. Step-in borings may also be used to more clearly define the limits as needed. Geoprobe® borings will be used with continuous sampling to identify the interface between the soil cover and the waste material. The soil borings will also be used to define the western limit of waste material in this area.

A truck- or track-mounted Geoprobe® will be used to push the soil core through the soil cover to the underlying waste material. Upon retrieval of the full soil core, the BC field geologist will describe the soil cover lithology, thickness and recovery, and document the information in the field logbook. Additional soil borings may be added, based on the field data, to fully define the area with less than two feet of cover material and the western limit of waste material.

Upon completion of each Geoprobe® boring, it will be backfilled with bentonite pellets or chips and hydrated. Soil boring cuttings will be spread on the ground surface unless they contain waste material or evidence of contamination (e.g., odor, staining, etc.), then they will be containerized as described in Section 4.4.

4.1.2 Perimeter Soil Borings

A total of seven soil boring locations (identified as FR-SB-44 through FR-SB-50) will be completed around the perimeter of the landfill near the toe of the landfill to evaluate slope stability. The proposed soil boring locations are shown on Figure 3-2 in the FSP. Each boring location will consist of drilling two soil borings (e.g., FR-SB-44A and FR-SB-44B) using a hollow-stem auger (HSA) drill rig equipped with 4.25-inch inside diameter HSAs. The first boring will be continuously sampled down to the top of bedrock using 2-feet long by 2-inch diameter split spoons and the Standard Penetration Test (SPT) via ASTM D1586 (Attachment A). Soil descriptions, sample recovery and the SPT blow counts will be recorded by BC's Field Geologist in the field logbook. Based on the lithology defined in the initial boring at each location, depth intervals will be targeted for geotechnical sample collection from the second soil boring to be completed at each location, approximately five feet from the original soil boring. Soil samples will be collected from the designated depths in the second boring using a combination of thin-walled Shelby tubes and split spoons. The samples will be hand delivered to the geotechnical laboratory for testing via ASTM methods for moisture content, grain size (via sieve and hydrometer), Atterberg limits, density, and consolidated undrained (CU) triaxial with pore pressure.

The sample containers and ASTM methods to be used for the geotechnical testing are presented in Worksheet No. 19 (Attachment A). The Shelby tube will be driven and prepared for delivery to the laboratory in accordance with ASTM Method D1587.

4.1.3 Hammer Drill Borings

A total of 12 hammer drill soil borings (identified as FR-SB-51 through FR-SB-62) will be completed on the side slopes of the landfill to evaluate the soil cover thickness. The proposed hammer drill locations are shown on Figure 3-3 in the FSP. These soil borings will be completed using a hand-held gas or electric powered hammer drill and/or slide bar to drive a core sampler normal to the side slope until underlying waste material is encountered, or until a minimum of two feet of soil cover is observed. The lithology and thickness of the soil cover will be described and recorded by BC's Field Geologist in the field logbook.

If less than two-feet of cover soil is encountered at any of the original 12 boring locations, additional step-out or step-in borings may be completed to define the area of insufficient cover soil.

Upon completion of each hammer drill location, the borehole will be backfilled with bentonite pellets or chips and hydrated. Waste material recovered from the boring will be containerized as described in Section 4.4, while uncontaminated cover soil recovered from the boring will be spread on the ground surface.

4.1.4 Survey

Prior to field mobilization, the perimeter, and Geoprobe® boring locations will be staked in the field by a licensed Ohio land surveyor and the horizontal and vertical position (elevation msl and spatial coordinates) recorded. Then, following completion of the field activities, the "as built" locations will be re-surveyed for those locations that were adjusted from the staked location. Survey accuracy will be ±0.01 feet vertically and ±0.1 feet horizontally.

4.1.5 Decontamination

Sampling equipment decontamination procedures will vary depending on the field task. The various levels of decontamination to be performed between sampling locations for the various types of field activities are described below.

- Level 1 (Geotechnical Sampling Equipment, Split-Spoons, Trowels, etc.)
  - Wash/scrub with potable water; and
  - Potable water rinse.
- Level 2 (IP, Water Level Meter and Probes)
  - Rinse with laboratory detergent/distilled water solution; and
  - Rinse with distilled water.
- Level 3 (Sampling Equipment that comes in Direct Contact with the Analytical Sample Media)
  - Wash/scrub with laboratory detergent/distilled water solution;
  - Distilled water rinse,
  - Laboratory-grade methanol rinse (if organic analyses are planned);
  - Distilled water rinse;
  - Laboratory-grade 10% nitric acid rinse (if metals analyses are planned); and
  - Final distilled water rinse.

The waste water generated from the decontamination procedures will be containerized and managed as described in Section 4.4.

4.2 Contingency Investigations

In addition to those investigations defined above, additional, or contingency investigations may also be necessary during the RD/RA. These contingency investigations might include monitoring well installation, groundwater sampling, monitoring well abandonment, and post-excavation sampling. The field procedures associated with these contingency investigations are discussed in general terms in the following subsections, so that if any aspect of these investigations are realized, this QAPP will not need significant revisions. Instead, this FSP will be amended with a brief discussion of the additional scope and figure showing the sample or well locations.

4.2.1 Monitoring Well Installation

If additional shallow monitoring wells are determined to be necessary, they will be installed consistent with those wells installed during the RI/FS. Wells will be constructed of two-inch diameter schedule 40 PVC well casing and screen. The well screen will include 0.010-slot well screen and a screen length of 5 to 10 feet, depending on the depth of the well. The well will be installed such that the shallow water table is contained within the screened interval. Wells will be installed through 4.25-inch I.D. HSAs, creating an approximately eight-inch diameter borehole. Well construction will include a sand/filter pack around the screened portion of the well to a height of approximately one to two feet above the top of the screen, followed by a one- to two-foot bentonite seal, then grouted to ground surface. A measurement reference point will be marked on the top of the inner PVC well casing. Surface completion will include a steel, lockable, stick-up protective casing secured in a concrete surface pad.

During drilling, the soils will be continuously sampled via the SPT method (ASTM D1586) to establish the lithology of the subsurface and the location of the shallow water table. Following installation the new

monitoring well(s) will be developed. Monitoring well installation and development will be in accordance with those procedures described in the FSP. Soil cuttings and development water will be managed in accordance with procedures described in Section 4.4.

Following installation, the horizontal/vertical position of the well will be surveyed by a licensed Ohio surveyor in accordance with the QA procedures described in this QAPP. The elevation of the measurement reference point on top of the inner PVC well casing will also be surveyed for elevation.

4.2.2 Groundwater Sampling

Groundwater sampling, if performed, will be conducted in accordance with this QAPP and the FSP. Groundwater sampling will use "low-flow" purging and sampling techniques to the greatest extent possible, depending on the recovery rates of the wells sampled. Groundwater samples collected for analysis will be sent to the analytical laboratory to be analyzed for the specified parameters, which might include some combination of volatile organic compounds (VOCs), semi-volatile organic compounds (SVOCs), metals, and polychlorinated biphenyls (PCBs). Field parameters measured during purging/sampling will include pH, temperature, dissolved oxygen (DO), specific conductance and turbidity. Purge water will be managed in accordance with those procedures described in Section 4.4.

4.2.3 Monitoring Well Abandonment

Monitoring well abandonment, if performed, will be in conformance with procedures described in the FSP.

Well materials removed during well abandonment will be managed in accordance with those procedures described in Section 4.4.

4.2.4 Post Excavation Sampling for Alternative A During the RA

The extent of soil excavation that will be necessary within the impacted soil area in the northeast corner of the Site is presently uncertain, and will be determined during the RD. The soil excavation to remove impacted soil may require post-excavation sampling to verify that the remaining soil meets the Performance Standards. The rationale for determining the size of the excavation will be defined in the RD and will be based, at least in large part, on existing data contained in the RI/FS Report.

Once the limits of the excavation have been achieved using the excavation criteria described in the RD, the northern and southern sidewalls, and the base, will be sampled. The precise post-excavation sampling strategy will be provided in the RD, but will likely include collecting composite samples. These samples will be submitted to the analytical laboratory for analysis. Analyses will likely include some combination of metals and SVOCs, as well as PCBs to ensure the Performance Standards have been met. Analytical procedures will be consistent with those described in this QAPP. The post-excavation sample data will be shared and discussed with USEPA prior to initiating backfilling of the excavation.

4.3 Investigation Derived Waste Management

Investigation derived waste (IDW) generated from field activities will be containerized in labeled 55-gallon DOT-approved steel drums and staged at a pre-designation location at the Site for characterization and disposal or retention on the site for incorporation into the landfill during the RA. Information contained on the label will include the drum contents, name, address and telephone number of generator, date(s) the material was placed in the drum, and a BC contact name/telephone number. Wastes will be separated based on type. For example, separate drums will be filled for solid landfill waste, contaminated soil, monitoring well development and purge water, decontamination wastewater, LNAPL, used personal protective equipment (PPE), and general trash. If a sufficient quantity of general trash is expected, then a dumpster or rolloff might be staged for this material instead of drums.

For liquid wastes, characterization of the drummed IDW will consist of collecting a composite sample from drums of similar contents and sending the sample to the analytical laboratory to be analyzed for the parameters required by the designated waste receiving facility. Characterization sampling will occur as soon as possible following field activities to ensure compliance with all local, state and federal regulations regarding storage of IDW. In the case of solid matrix IDW, these wastes may be placed in the on-site landfill beneath the cap during the RA.

Investigation generated wastes will be disposed in accordance with applicable Federal, State, and Local regulations.

4.4 Decontamination Procedures

Sampling equipment decontamination procedures will vary depending on the field task. The various levels of decontamination to be performed between sampling locations for the various types of field activities are described below.

- Level 1 (Geotechnical Sampling Equipment, Split-Spoons, Trowels, etc.)
  - Wash/scrub with potable water; and
  - Potable water rinse.
- Level 2 (IP, Water Level Meter and Probes)
  - Rinse with laboratory detergent/distilled water solution; and
  - Rinse with distilled water.
- Level 3 (Sampling Equipment that comes in Direct Contact with the Analytical Sample Media)
  - Wash/scrub with laboratory detergent/distilled water solution;
  - Distilled water rinse,
  - Laboratory-grade methanol rinse (if organic analyses are planned);
  - Distilled water rinse;
  - Laboratory-grade 10% nitric acid rinse (if metals analyses are planned); and
  - Final distilled water rinse.

The waste water generated from the decontamination procedures will be containerized and managed as described in Section 4.4.

5. SAMPLE CUSTODY AND DOCUMENTATION

Identification, documentation and strict custody of samples are important for steps to maintain the integrity of the environmental samples. These topics are addressed in the SOPs and ASTM methodologies, and the FSP. The subsections below and Worksheet Nos. 26 and 27 (Attachment A) address sample identification, packaging, shipping, and documentation. Procedures followed during the field investigation will be in accordance with the FSP and are summarized in the following sections.

5.1 Sample Identification System

The method of identification of a sample depends on the type of measurement or analysis performed. When field screening measurements (e.g., pH, dissolved oxygen, or turbidity) are made, data are recorded directly in logbooks or on field investigation forms. Identifying information such as project name, station number, station location, date and time, name of sampler, field observations, remarks, or other pertinent information will be recorded.

Samples collected for laboratory analysis during the field investigation will be specifically designated for unique identification. Each sample will be designated by an alpha-numeric code which will identify the sampling location, type or as necessary depth.

Aqueous and solid samples collected as a part of the work will be assigned unique sample identifiers. The sample identifiers are required in order to identify and track each of the samples collected for analysis. Associated field QA/QC samples such as duplicates and field blanks will be further identified adding the date of collection to the sample name as shown below, and as needed a number will be added sequentially to distinguish the samples.

Each of the samples will be identified by a unique alpha-numeric code that indicates the particular sample type, location, and date. The format of the code is as follows:

Medium/Sample Type Code-Location Number

The three codes that make up the sample identifier are described as follows:

1. The Site name – FR (Ford Road);
2. The medium/sample type codes are listed below:

- MW - Groundwater sample taken from a monitoring well;
- SW – Surface water sample;
- SP – Seep sample;
- SED – Sediment sample;
- DW – Drummed waste sample;
- W – Waste sample;
- SB – soil boring sample;
- S – Soil sample
- TB – Trip Blank;

- FB – Field Blank sample;
- DUP – Duplicate sample; and
- MS/MSD – Matrix Spike/Matrix Spike Duplicate sample.

3. The location code will be keyed to the specific sample designation.

The following is an example of a sample identifier that will be used for samples collected for geotechnical laboratory analysis:

FR-SB-48B-10-12: Indicating that the soil sample was collected from the second boring at soil boring location FR-SB-48 from a depth of 10 to 12 feet below ground surface.

5.2 Sample Custody, Packaging, and Shipping

Sample custody must be strictly maintained and carefully documented each time the sample material is collected, transported, received, prepared, and analyzed. Custody procedures are necessary to ensure the integrity of the samples, and samples collected during the field investigation must be traceable from the time the samples are collected until they are disposed of and/or stored, and their derived data are used in the final report. Sample custody is defined as (1) being in the sampler's possession; (2) being in the sampler's view, after being in the sampler's possession; (3) being locked in a secured container, after being in the sampler's possession; and (4) being placed in a designated secure area. Sections 5.2.1, 5.2.2, and 5.2.3 document the on-site packaging and shipment procedures for sample custody in the field. The analytical and geotechnical laboratories will maintain custody after arrival of the samples through internal logging procedures, as indicated in Section 5.2.4.

5.2.1 Field Custody

Field custody procedures will be implemented for each sample collected. The field sampling team will be responsible for the care and custody of the samples until they are properly transferred or dispatched. To assure the integrity of the samples, the samples are to be maintained in a designated, secure area and/or be custody sealed in the appropriate containers prior to shipment.

Each environmental sample will be properly identified and individually labeled. Labels will be filled out in indelible ink with at least the following information: field sample identification, date and time of sample collection, initials of sampler(s), analysis/test required, and preservation (as appropriate). The sample label will be securely attached to the sample container. In addition, an "up" arrow will be included on each Shelby tube so that the tube can be maintained in an upright position during storage and shipment.

Environmental samples being analyzed by the analytical laboratory will be properly packaged and shipped for analysis. Following labeling, the sample bottles will be enclosed in clear sealable plastic bags (e.g., zip-loc bags), through which the identifying label is visible.

The sample containers, now sealed in bags, will then be placed in a hard plastic cooler and voids filled with either ice or packaging material (e.g. bubble wrap). Samples will be packed with sufficient ice (enclosed in double-bagged sealable plastic bags) to cool the samples to 4±2°C. Additionally, each iced cooler will be packed with a cooler temperature blank. Lastly, the cooler will be filled with adequate cushioning material to minimize the possibility of container breakage during transportation.

Samples destined for the geotechnical laboratory will be secured in a cooler or box and transported to the laboratory.

A COC will be included with all sample transfers/shipments to the analytical or geotechnical laboratory. A sample COC form to be used for the geotechnical samples is included as Figure 5-1. TestAmerica will provide the COC forms to be completed for the analytical samples.

5.2.2 Sample Containers and Preservatives

Different combinations of containers and preservation techniques are required for the various samples, in part due to specified maximum allowable sample holding times for certain analyses. The various required preservation methods, container types, and maximum sample holding times for the aqueous and solid samples are listed on Worksheet No. 19 (Attachment A). All samples destined for chemical analysis, including trip blanks, must be cooled to and maintained at 4 (±2) degrees Celsius from the time they are collected, forward.

Sample labels are required on sample containers for the primary purpose of sample identification. Specific field data need not be recorded on the labels as they will be recorded on field data sheets and/or in the field logbook. The sample labels will contain the following information:

- Sample identification (see Section 5.1);
- Depth of sample (if appropriate);
- Analysis/test to be performed;
- Preservative (if required);
- Project name and number;
- Date and time of sample collection; and
- Initials of Sampler

5.2.3 Sample Shipping Procedures

Shipment of samples to an analytical laboratory is usually required upon completion of sample collection, unless the laboratory can provide a courier. Packaging is necessary in order to protect the sample containers, to maintain the samples at a temperature of 4°C, and to comply with applicable transportation regulations.

In general, samples are shipped using packaging that is supplied by the analytical laboratory. The packaging normally includes a shippable insulated box such as an ice cooler and contains protective internal packaging materials such as foam sleeves. Some laboratories use proprietary sample packaging with integral internal packaging. In either case, ice will be used to maintain the temperature of the samples.

Regulations will be observed regarding the shipment of dangerous goods. Sample containers and certain field equipment may be defined as dangerous goods such that special requirements will be followed for their shipment. Air shipment of dangerous goods is regulated by the International Air Transport Association (IATA) as described in "Dangerous Goods Regulations" (IATA, current year). IATA Regulations are updated annually. Shipment by ground is regulated by the U.S. Department of Transportation (DOT; 49 CFR). Furthermore, individual shippers (e.g., Federal Express) or other countries (international shipments) may have additional requirements for dangerous goods shipment.

Environmental samples, (e.g., groundwater, soil, etc.) containing relatively low concentrations of contaminants, (regulated under 40 CFR) are currently exempt from Hazardous Goods regulations. 40 CFR 261.40(d) states, "A sample of solid waste or a sample of water, soil, or air which is collected for the sole purpose of testing to determine its characteristics or composition is not subject to this Part or Parts 262 through 267 or Part 124 of this chapter or to the notification requirements of Section 3010 of RCRA." Sample containers will be packed to avoid inadvertent breakage and/or spillage during shipment.

Environmental samples which are known to be or suspected to be toxic, corrosive, flammable, or those which emit a noxious or anesthetic annoyance or discomfort to passengers and/or flight crews when shipped by air, will be packed, labeled and shipped in accordance with current IATA regulations. Refer to "Dangerous Good Regulations" (current year), Section 3 - Classification.

Specific regulations exist (Shipment in Excepted Quantities) for the shipment of many reagents that are commonly used as preservatives and decontamination agents. Consequently, the shipment to the Site of "empty" sample containers containing small quantities of preservatives will be conducted in accordance with the regulations. The most significant limitations for the shipment of preservatives (IATA, current year) involve those for nitric acid in which only small quantities (<0.5L) of low concentration (<20 percent) nitric acid can be shipped in any given sample shipment.

If the analytical laboratory couriers the samples directly from the Site, or the samples are being delivered directly to the laboratory by BC, the COC form will not be placed inside the cooler. The COC form must be signed by the receiver (e.g., the laboratory courier, or the laboratory sample custodian) when he/she accepts possession of the samples.

5.2.4 Laboratory Custody Procedures

Laboratory custody procedures are described in the laboratory SOPs presented in Attachment B.

5.3 Sample Documentation

The documentation generated for and associated with the field activities will be summarized (in tabulated form if possible) and placed in the project files.

5.3.1 Field Logbooks

The sampling team or any individual performing a particular field investigation activity (e.g., soil or groundwater sampling) will be required to maintain a bound, weatherproof field logbook. Each logbook will be controlled and assigned a unique sequential identification by the sampling personnel. At a minimum, daily entries into the field logbooks will include the date, personnel Site, the proposed activities, weather, start/stop times of activities (including arrival and departure times), visitor's names, community contacts, and other site-specific information determined by the sampling personnel to be noteworthy. Pertinent sampling information to be recorded in field logbooks includes information that is necessary to reconstruct the investigative/sampling operations. Documentation of sample activities in the field logbook will be completed immediately after sampling at the location of sample collection. Logbook entries will contain sample information, including sample number, collection time, location, descriptions, field measurements, and other site- or sample-specific observations. Difficulties with sample recovery and other field observations (e.g., staining, visible contamination, etc.) must be noted if encountered. Any field difficulties/problems, and deviations from the FSP, QAPP and/or other Site plans (with justification) must also be included in the field logbook.

If photographs are taken as part of the documentation procedure, the name of the photographer, the date, the time, and a description of the photo (including direction and scale, if applicable) will be entered sequentially in the field logbook as the photographs are taken. Once downloaded, the photographs will be numbered in correspondence to the logbook numbers, and the above information will be placed in a photographic log filed with the photographs.

The field logbooks will have the name of the Site and project written on the cover and inside the cover. The date, page number and initials of the primary field note transcriber will be written atop each page during the day the entries are made. Corrections to the logbooks will consist of a single strike line through the incorrect entry, the new accurate information, the initials of the corrector, and the date of amendment. Any blank spaces/pages in the logbooks will be crossed out with a single strike mark and signed by the person making the notation.

5.3.2 Field Investigation Forms

In addition to field logbooks, field team members may use appropriate forms applicable to the field activities. For example, during purging and sampling of the monitoring wells, a monitoring well data sheet may be completed for each well. The field sampling forms will include the following information:

- Sampling location;
- Date and time;
- Condition of the well;
- Static water level (depth to water);
- Depth to the bottom of the well;
- Calculated well volume;
- Purging method (if method appropriate);
- Field parameters measured during purging;
- Actual purged volume (if method appropriate);
- Sample collection method;
- Sample description;
- Field meter calibration data; and
- General comments (weather conditions, etc.).

5.3.3 On-Site Screening Analysis Records

Field screening data (e.g., liquid level measurements, temperature, turbidity, etc.) will be reported by Site personnel in field logbooks and/or on field investigation forms associated with the sampling event. Documents and/or raw data generated during on-site field screening sample analyses will become part of the on-site field screening analyses record.

6. LABORATORY REQUIREMENTS AND PROCUREMENT OF LABORATORY SERVICES

6.1 Analytical Laboratory Services

The analytical laboratory program to be undertaken at the Site, including potential laboratory assignments, is summarized in Worksheet No. 23 (Attachment A). Sample collection and analytical protocol information, (which includes the following: sample matrix, number of samples, analytical parameter/group, analytical method(s), sample volume and container requirements, sample preservation, and sample holding times), are presented on Worksheet No. 19 in Attachment A. Quantitation limits for the analyses are provided on Worksheet No. 15 in Attachment A, while the analytical SOPs are listed on Worksheet No. 23 (Attachment A) and included in Attachment B. Prior to the sampling event, BC will coordinate with the analytical laboratory to schedule the delivery of sample containers and the analyses.

Results from the analyses are to be reported in standard units for the matrix and analyses (e.g., ug/L for groundwater and ug/Kg for soil). Worksheet No. 30 (Attachment A) identifies the laboratory providing analytical services. It is anticipated that TestAmerica Laboratories, Inc., located in North Canton, Ohio will be subcontracted by BC as the analytical laboratory for this project.

6.2 Geotechnical Laboratory Services

The geotechnical laboratory program to be undertaken at the Site, including potential laboratory assignments, is summarized in Worksheet No. 23 in Attachment A. Sample collection and analytical protocol information, (which includes the following: sample matrix, number of samples, geotechnical test/method procedure, sample volume and container requirements), are presented on Worksheet No. 19 in Attachment A. The geotechnical SOPs/ASTM methods are listed on Worksheet No. 23 in Attachment A and included in Attachment C. Prior to the sampling event, BC will coordinate with the geotechnical laboratory to schedule to verify the required sample containers, sample volumes and the test methods.

Results from the geotechnical tests will be reported in the appropriate units identified in the SOPs/ASTM methodology. Worksheet No. 30 (Attachment A) identifies the laboratory providing geotechnical testing services. It is anticipated that BBC&M Engineering, Inc., located in Cleveland, Ohio will be subcontracted by BC as the geotechnical testing laboratory for this project.

7. ANALYTICAL AND GEOTECHNICAL DATA HANDLING, REVIEW, AND REPORTING

Standard methods and references will be used as guidelines for data handling, reduction, review, and reporting. Data for the project will be compiled and summarized with an independent verification at each step in the process to prevent transcription/typographical errors. Any computerized entry of data will also undergo verification review. Worksheet No. 29 (Attachment A) lists the documents and records that will be generated during the project. In addition to the following subsections, data verification, verification and usability assessment procedures for the project are also summarized in Worksheet Nos. 34 through No. 37 in Attachment A.

7.1 Data Reduction

The following sections define how field, laboratory, and project data will be reduced, summarized and tabulated.

7.1.1 Field Data Reduction

Field instrumentation data (e.g., temperature, pH, etc.) will be reported by Site personnel in field logbooks and/or on field investigation forms associated with the sampling event. At the end of the field investigation, the field screening data results will be summarized in the Site's computerized database and/or in tabulated form, as warranted.

7.1.2 Analytical Laboratory Data Reduction

The analytical laboratory will tabulate and compile analytical results and associated QA/QC information. Data generated by the laboratory will be reported in a specified format containing the required elements to confirm DQO compliance. Analytical results will be presented on a reduced summary form which will include the dates the samples were received and analyzed, and the analytical methods used. Laboratory QA/QC information required by the method protocols will be compiled, including the application of data QA/QC qualifiers as appropriate. In addition, COC forms will be provided in the reduced laboratory summary data packages to confirm DQO compliance. Specifics on internal laboratory data reduction protocols and reporting are identified in the laboratory's SOPs presented in Attachment B.

For data management, the laboratory will use their in-house Laboratory Information Management Systems (LIMS). The entry of input data and calculations will be checked, and the initials of the individual entering the data and the reviewer(s) will accompany all data transfers. Calculations to be performed typically include the following:

- Coefficients of variation for replicate samples;
- Spiked sample recoveries;
- Standard reference sample concentrations; and
- Environmental sample concentrations.

7.1.3 Geotechnical Laboratory Data Reduction

The geotechnical laboratory will tabulate and compile testing results and associated QA/QC information. Data generated by the laboratory will be reported in a specified format containing the required elements to confirm DQO compliance. Laboratory QA/QC information required by the ASTM method protocols will be compiled. Specifics on internal laboratory data generation and reduction protocols and reporting are identified in the laboratory's SOPs presented in Attachment C.

7.1.4 Project Data Reduction

Following receipt of the laboratory reports by BC, the results will be compiled in the database for the project. Additional information on project data reporting requirements is provided in Section 7.3.

7.2 Data Review

7.2.1 Methodology

A comprehensive, qualitative data review will be performed on each of the laboratory results to verify that information generated relative to a given sample is complete and accurate. The data review will be consistent with the information outlined in Worksheet Nos. 34, 35, and 36 in Attachment A. Formal data validation will not be performed.

The criteria (limits) used for data verification will be consistent with those listed on Worksheet No. 12 in Attachment A. To accomplish the data verification process, the system completes the following steps:

- Step 1: Completeness
  - Field Sample Completeness - Determine if field sampling was complete and was performed correctly.
  - Field Method Deviations – Determine potential impacts from noted/approved deviations, in regard to PQOs.
  - Field Documentation Completeness – Determine if the field documentation and COC forms are complete.
  - Laboratory Completeness – Determine if laboratory analysis/testing and reporting is complete and utilized the correct methods.
  - Laboratory Method Deviations – Determine potential impacts from noted/approved deviations, in regard to PQOs.
  - Database Completeness – Determine that the computer relational database is complete and correct.
- Step 2: Contamination (Analytical Samples Only)
  - Method Blank Evaluation – Determine if the source of positive results in the field sample is attributable to laboratory processing.
  - Trip Blank Evaluation – Determine if the source of positive results in the field samples is attributable to sample shipment.
  - Field Blank Evaluation – Determine if the source of positive results in the field sample detection is attributable to field processing.
- Step 3: Holding Times (Analytical Samples Only)
  - Holding Time Evaluation – Check whether holding times meet, slightly exceed, or grossly

- Step 4: Accuracy (Analytical Samples Only)
  - MS/MSD Evaluation – Spiked field sample recoveries for the MS/MSD are compared to the acceptance criteria range.
  - LCS – Spiked compound recoveries are compared to the acceptance criteria range.
  - Surrogate Evaluation – Surrogate recoveries are compared to the acceptance criteria ranges.
- Step 5: Precision (Analytical Samples Only)
  - Laboratory Duplicate Evaluation – The relative percent differences between a field sample and its laboratory duplicate (if performed) are compared to the acceptance criteria.
  - Field Duplicate Evaluation – Check whether the precision between a field sample and its field duplicate meet project criteria.
- Step 6: Representativeness (Analytical Samples Only)
  - Historic Data Review – Determine if sample is consistent with historic data within the context of the anticipated natural variability of groundwater quality.
- Step 7: Sensitivity(Analytical Samples Only)
  - Detection Limits - Determine if reported laboratory detection limits meet the project performance criteria.

7.2.2 Data Verification Summary for Analytical Sample Results

A summary report detailing the out-of-control criteria and the associated sample data that are qualified will be generated at the end of the data verification process. The following evaluation procedures account for potential data verification out-of-criteria situations:

- Samples analyzed outside of holding time criteria will be rejected in the event of a gross exceedance;
- Samples with surrogate recoveries greater than or less than the project acceptance criteria ranges will have values greater than the sample reporting limit qualified as estimated;
- Samples with surrogate recoveries below the project control limits but greater than or equal to 10% will have all non-detected values qualified as estimated;
- LCS samples with recoveries outside of criteria will have all samples in the same preparation batch qualified following the same rules as for surrogates;
- Samples for organic analysis with MS recoveries outside of project control limits will have the specific out-of-criteria compound result(s) in the associated unspiked sample qualified; and
- Field duplicate analytes with out-of-criteria RPDs will have the analyte values greater than the sample reporting limit estimated in only the field duplicate and its associated sample.

7.2.3 Reconciliation with Data Quality Objectives

BC's QA Officer, in conjunction with the Project Manager, will determine whether field and analytical/geotechnical data or data sets meet the requirements necessary for decision making. The results of measurements will be compared to the DQO requirements set forth in this QAPP.

7.3 Data Reporting

Data will be reported directly by the analytical and geotechnical laboratories, and in the Remedial Design Report prepared by BC. The subsequent sections summarize how the data will be reported in each of these two formats.

7.3.1 Contents of Laboratory Data Reports

The laboratories will provide data reports in a reduced summary format. The data packages will include:

- A copy of the chain-of-custody;
- Laboratory results summary (includes detection limits and dilution factors where applicable);
- Laboratory listing of sample preparation and analytical/testing methods;
- Laboratory compliance quality control summary (includes blank results, LCS, LSCD, MS/MSD and surrogate results where applicable); and
- The hardcopy analytical laboratory report will include a written case narrative, which will note any problems encountered in receipt or during analysis of the samples, and the corrective actions utilized.

7.3.2 Data Presentation in the Remedial Design Report

A list of report submittals and a schedule of proposed delivery dates are provided in Worksheet Nos. 33 and No. 16 in Attachment A, respectively. BC's Project Manager and QA Officer will review all laboratory reports prior to use to ensure compliance with project requirements.

The RD Report will include summaries of the analytical and geotechnical data generated during the RD investigation. Summary formats will include tabular and graphical, and presented spatially on figures as appropriate. A narrative discussion of the data sets will be included that will include discussion of sampling procedures, QA/QC procedures, data quality and data usability. Appendices to the RD Report will contain laboratory data/results reports, completed field forms, and waste disposal manifests as appropriate.

8. QUALITY ASSURANCE/QUALITY CONTROL SAMPLE REQUIREMENTS

This section discusses the type and quantities of QA/QC samples to be utilized for chemical sampling during implementation of the field program. These samples only pertain to the analytical samples, and not the geotechnical samples.

8.1 Field Quality Control Samples

The subsections below present general information and guidance on field QC samples, including definition and frequency of QC blanks. Worksheet No. 20 (Attachment A) provides a summary of the required field QC samples. Field QC samples will be labeled and shipped according to the procedures outlined in Section 5.0. Field QC samples will not be collected for waste characterization sampling or for resamples to confirm low-level parameter detections.

8.1.1 Field Environmental Duplicate Samples

Duplicate environmental samples may be analyzed to evaluate the reproducibility (precision) of the sampling procedures. Duplicate samples, when utilized, will be collected at a rate of one duplicate for every 20 samples per sample matrix. The duplicate samples will be collected concurrently from the same location as the original environmental sample. The original and duplicate samples will be a pair of co-located samples that are obtained and prepared or homogenized separately. The duplicated sample will be "coded" such that the laboratory will be unable to determine the original field sample that was duplicated. An explanation of the duplicate "coding" will be documented in the field logbook and the appropriate field sampling forms.

8.1.2 Field Blanks

A field blank will be collected for non-disposable equipment to evaluate the potential for residual chemical contamination of environmental samples from inadequate decontamination of field equipment. Field blanks will be collected by pouring distilled, deionized (DI) water over and/or through decontaminated equipment and collecting the rinsate in the appropriate sample container(s). Field blanks will be collected at a frequency of one per 20 environmental samples per matrix. Analysis of field blanks will be identical to analysis of the associated environmental samples, and the blanks will be preserved as indicated in the applicable methods. Shipment of field blanks will occur with the associated environmental samples.

8.1.3 Trip Blanks

A trip blank serves to detect possible cross-contamination of samples resulting from handling, storage and shipment procedures. Trip blanks are needed whenever environmental samples will be analyzed for VOCs and consist of volatile organic analysis (VOA) vials filled at the laboratory with DI water. Each shipment of samples for VOA analysis will include at least one trip blank that will accompany the associated samples throughout their life-span, from being shipped with the empty sample containers to being returned to the laboratory with the environmental samples. In addition, trip blanks are stored by the laboratory under the same conditions as the environmental samples. The trip blanks will be analyzed identically to the associated environmental samples.

8.1.4 Cooler Temperature Blanks

A cooler temperature blank will be included in each cooler of samples shipped from the Site to verify that the cooler temperature has been maintained at 4°C (±2°C). The temperature blanks will be provided by the laboratory and will consist of a sample container filled with either potable or DI water, unpreserved, and labeled as a temperature blank. The laboratory will record the temperature of the blank water on the COC form immediately upon cooler receipt by the laboratory.

8.2 Laboratory Quality Control Samples

General information and guidance on laboratory QC samples are presented in the subsections below. A summary of QC procedures, frequencies, criteria, and corrective actions for the samples, as determined by the applicable method guidelines, is provided in Worksheet No. 28 (Attachment A). More detailed information of these quality control samples is presented in Attachment B (analytical laboratory Quality Assurance Manual and SOPs) and Attachment C (geotechnical laboratory Quality Assurance Manual and ASTM Standards). The following laboratory quality control samples only apply to the analytical laboratory where chemical analysis of samples will be performed.

8.2.1 Method Blanks

A method blank, also known as a preparation blank or a laboratory reagent blank, will be analyzed with every batch of samples (i.e., up to 20 environmental samples) to ensure that contamination has not occurred during the analytical process. Method blanks consist of a portion of analyte-free water or solid that is processed through the entire analytical procedure the same as the corresponding batch of environmental samples.

8.2.2 Matrix Spike/Matrix Spike Duplicates

Matrix spike/matrix spike duplicate (MS/MSD) samples (also known as spike/duplicate samples or laboratory fortified samples) may be used to assess precision and accuracy of the analytical methods. In this procedure, additional aliquots of an actual field sample are collected at a specific location, and two aliquots are "spiked" by the addition of known amounts of an analyte or analytes. These samples are then analyzed identically to the environmental samples. A comparison of the resulting concentration(s) to the original sample concentration, and among the two "spike" sample concentrations, provides information on the ability of the analytical procedure to generate a correct result from the sample. MS/MSD samples may be collected in the field at a rate of [five percent], and will be analyzed on a per batch basis, with up to 20 environmental samples constituting a batch. The validity of MS/MSD %R and RPD values will be determined using the acceptance criteria stated in Worksheet No. 28(Attachment A).

8.2.3 Surrogate Compounds

Surrogates (also known as system monitoring compounds or reiterated monitoring compounds) are compounds of known concentrations added to every organic analysis sample at the beginning of the sample preparation to monitor the accuracy of recovery in regard to sample preparation and analysis. Surrogate recoveries will be used to assess potential matrix interferences. The recovery values will be compared to values established in the applicable methodologies to determine the validity of the data (see Worksheet No. 28 in Attachment A).

8.2.4 Internal Standards

Internal standards are used to provide instrument correction for variation in instrument performance and injection volumes. Internal standards also establish relative response factors for the analytes. Worksheet No. 28 in Attachment A presents the acceptance criteria for internal standards as per the applicable methodologies.

8.2.5 Laboratory Control Samples

A laboratory control sample (LCS) consists of an analyte-free water or solid phase sample that is spiked with target analytes at a known concentration. A LCS will be analyzed for every batch of samples (i.e., less than or equal to 20 samples) to provide information on the accuracy of the analytical methods and on the laboratory's performance. LCS samples must be prepared from a stock solution different than the one used to prepare the calibration standards. The percent recoveries for the LCS compounds will be compared to QC limits stated in the appropriate methods, and are presented in Worksheet No. 28 in Attachment A.

8.2.6 Laboratory Duplicate Samples

A laboratory duplicate sample will be prepared and analyzed for each batch of samples of similar matrix. These samples serve to demonstrate acceptable method precision (calculated through RPD values) by the laboratory. The RPD values must be within acceptable QC limits as per Worksheet No. 28 (Attachment A) and the appropriate methodology.

8.2.7 Interference Check Samples

An interference check sample (ICS), which contains target analytes at known concentrations, verifies the laboratory's inter-element and background correction factors. Analysis of ICS samples is unique to metals analysis using the inductively coupled plasma (ICP) method.

9. INSTRUMENT CALIBRATION AND PREVENTIVE MAINTENANCE

9.1 Instrument Calibration

This section describes the requirements for control, calibration and adjustment (if necessary) of instrumentation (further details are provided in Worksheet Nos. 22 and 24 in Attachment A). Instruments will be calibrated and adjusted (if warranted) at specified, predetermined intervals using known, recognized standards. All instruments will be calibrated in accordance with manufacturer's instructions.

9.1.1 Field Instrumentation

Sampling personnel will be responsible for maintenance and calibration of equipment while it is in use in the field. Equipment will be calibrated at least daily according to the manufacturer owner manuals. Information to be recorded includes the following (as applicable):

- Name of device/instrument calibrated, including instrument serial/identification number (if known);
- Manufacturer;
- Date of calibration;
- Standard(s) used during calibration (applicable calibration standards will be traceable to national standards);
- Procedure of calibration;
- Adjustments made (if any);
- Final settings of instrument/device;
- Signature of calibration operator; and
- Additional Comments (if necessary).

Equipment found to be out of calibration will be recalibrated. When instrumentation is found to be out of calibration or damaged, or if the instrument is consistently out of calibration, it will be repaired or replaced.

9.1.2 Analytical Laboratory Instrumentation

Personnel at the analytical laboratory will be responsible for ensuring that analytical instrumentation are of the proper range, type and accuracy for the test being performed, and that all of the equipment are calibrated at their required frequencies, according to specific protocols/procedures. At a minimum, calibration is required: (1) when an analytical method is first set up; (2) prior to the analysis of any batch of samples; (3) when the instrument detector has been subject to major maintenance; or (4) when the instrument fails the calibration QA/QC checks (see Worksheet No. 24 in Attachment A).

Laboratory equipment will be calibrated using certified/nationally recognized standards and according to the applicable methodologies and the laboratory SOPs. Stock standards will be dated when received, and the preparation of all standard solutions will be documented in a standard preparation logbook. Information to be recorded includes the standard prepared, the source and concentration of the standard, the standard lot number, the data prepared, and the initials of the preparer.

The methodologies/laboratory SOPs also specify the appropriate operations to follow during calibration or when any instrument is found to be out of calibration. Information on and frequency for laboratory QA/QC samples are presented in Section 8.2 and/or the specified analytical method procedures.

9.2 Preventive Maintenance

Worksheet Nos. 22 and No. 25 in Attachment A provide summary information on maintenance of field and laboratory instrumentation, respectively.

9.2.1 Field Instrumentation

Field equipment will be maintained at its proper functional status in accordance with the owner's manual specifications. A check of the equipment will be performed before field activities begin, and routine spare parts (e.g., batteries, connectors, etc.) and maintenance tools will be maintained on Site, to minimize equipment downtime during the field activities. Visual checks of the equipment will be conducted on a daily basis.

Routine preventive maintenance will be performed to assure proper operation of the equipment. Any maintenance performed on field equipment will be documented on instrument calibration and maintenance sheets or in the designated field logbook, and will be undertaken only by personnel who have the appropriate skills and/or training in the type of maintenance required (see Section 12.0). Information to be recorded includes (as applicable):

- Name of device/instrument repaired, including instrument serial/identification number (if known);
- Manufacturer;
- Date of maintenance;
- Reason for maintenance;
- Maintenance performed;
- Adjustments made (if any);
- Signature of repair operator; and
- Comments (if any).

9.2.2 Laboratory Instrumentation

To minimize the occurrence of instrument failure and other system malfunctions, a preventive maintenance program for laboratory instruments is implemented. The laboratories are responsible for the maintenance of their equipment, in accordance with manufacturers' specifications. Laboratory personnel will be responsible for ensuring that instrumentation is functioning properly and within specific guidelines/specifications prior to starting any analysis or test. Maintenance, performed by either laboratory personnel for routine replacements or the manufacturer's service personnel for major instrumentation checks, will be conducted according to manufacturer's recommendations and procedures.

All maintenance performed on the laboratory instruments will be documented in maintenance logbooks. The date, initials of the person performing the maintenance, and the type of maintenance performed will be recorded. In addition, receipts from major maintenance performed by the manufacturer's service personnel will be kept by the laboratory.

10. SUPPLIES AND CONSUMABLES

Supplies and consumables necessary for the field investigation will be obtained through appropriate commercial markets and will meet any supply-specific requirements outlined in the project documents (e.g. QAPP, FSP, HASP, etc.). Supplies and consumables will be inspected by field personnel prior to use. Any supplies/consumables that do not meet requirements will be discarded or returned to the supplier.

Supply-specific requirements include the following:

- Containers utilized for analytical samples will be supplied by the analytical laboratory performing the analyses;
- The field QA/QC sample water will be DI water that is certified to be contaminant-free, and provided by the laboratory;
- Decontamination chemical supplies will be of ultra pure laboratory grade (nitric acid) and pesticide grade (methanol) or better; and
- Field screening instrumentation supplies will be of procedural- and/or manufacturer-specific grade.

Supplies and consumables will be stored, as necessary, in a designated area on the Site or in a BC office. The storage area will be protected from adverse conditions (e.g., weather, heat, etc.) to protect the supplies/consumables from possible outside contamination and breakage.

During the "readiness review" (see Section 11.1) and throughout the field investigation, the sampling personnel will be responsible for accountability for contractor-owned and/or -controlled property on the Site. The field personnel will properly obtain, secure, maintained, operate, and decontaminate equipment. The field personnel will also maintain an inventory of consumable supplies on-site, control access to them, and will ensure that supplies are stored properly and used only for their intended purpose. Supplies will be purchased in quantities that can be consumed within 30 days, and will not be "stock-piled" at the Site.

11. PROJECT ASSESSMENTS

The following section contains information on the various types of project assessments, which is also indicated in Worksheet Nos. 31 and 32 in Attachment A.

11.1 Project Readiness Audit

BC's PM and/or QA Officer may conduct a "readiness audit" for field activities, prior to the commencement of the investigation. Equipment and supplies will be inventoried, and field instrumentation will be checked to determine they are in working order. Maintenance activities performed during the "readiness audit" are to be documented and maintained in the project file and referenced in the designated field logbook.

11.2 Surveillances

Surveillance of field activities may be conducted with oversight personnel from USEPA, OEPA and/or BC's PM and/or QA Officer. The surveillance may be conducted either as an announced or an unannounced visit to the Site. Surveillance notes obtained by BC personnel will be kept in the project file and referenced in the designated field logbook.

12. TRAINING OF PROJECT STAFF

Performance monitoring and investigation techniques training will be provided to the project staff. Training requirements are discussed in the subsections below, and are summarized on Worksheet No. 8 in Attachment A.

12.1 General Personnel Training

Project staff will receive general training on the project objectives, PQO(s) for the Site, USEPA requirements, the FSP, the HASP, and this QAPP.

12.2 Quality Assurance Training

Training will include topics related to QA, and will include, but not be limited to:

- QAPP elements, including project-specific QA requirements;
- Need for proper documentation and records maintenance;
- Responsibilities and authority of project personnel;
- Chain of command/communication;
- Handling and review of field, laboratory and non-direct measurement data;
- USEPA QA requirements; and
- Field and sampling procedures.

12.3 Technical Training

Personnel performing Site activities will receive training on their respective tasks. In general, training will be provided to accomplish:

- Initial proficiency;
- Maintain proficiency; and
- Adapt to changes in technology, methods, or job responsibilities.

The extent of training will be commensurate with the following objectives:

- Scope, complexity and nature of the activity to be performed; and
- Prior education, experience and proficiency of personnel.

13. CORRECTIVE ACTION

Review and implementation of systems and procedures may result in recommendations for corrective action (see also Worksheet No. 32 in Attachment A). Deviations from the specified procedures within approved project plans due to unexpected site-specific conditions will warrant corrective action. All errors, deficiencies, or other problems will be brought to the immediate attention of the BC PM and the Settling Parties, and may, as required be brought to the attention of the USEPA RPM.

Procedures have been established to ensure that conditions adverse to data quality are promptly investigated, evaluated and corrected. These procedures for review and implementation of a corrective action are as follows:

- Define the problem;
- Investigate the cause of the problem;
- Develop a corrective action to eliminate the problem, in consultation with the personnel who defined the problem and who will implement the corrective action;
- Obtain required approvals;
- Implement the corrective action;
- Verify that the corrective action has eliminated the problem; and
- Evaluate the effectiveness of the corrective action.

If problems occur with the laboratories or analyses/testing, the laboratory must immediately notify BC's PM or QA Officer by telephone and/or email. Consultation with appropriate personnel regarding appropriate actions would then follow.

All corrective action documentation (e.g., emails, telephone logs, etc.) will include an explanation of the problem and a proposed solution. Possible corrective action procedures include the following:

- Changing sampling methodology;
- Changing analytical methodology;
- Performing re-extractions/re-analyses;
- Performing a statistical analysis to determine confidence; and
- Performing re-sampling.

14. QUALITY ASSURANCE REPORTS TO MANAGEMENT

Worksheet No. 33 contains information on QA reporting requirements. QA/QC issues will be reported by the analytical laboratory in each laboratory data delivery package.

15. REFERENCES

BBL, 2006. Remedial Investigation/Feasibility Study Report, Ford Road Landfill Site, March 2006.

Brown and Caldwell, 2009. Remedial Design Work Plan, Ford Road Landfill Site, August 2009

IDQTF, 2005a. Uniform Federal Policy for Quality Assurance Project Plans, Evaluating, Assessing, and Documenting Environmental Data Collection and Use Programs, Part 1: UFP-QAPP Manual, Final, Version 1. Intergovernmental Data Quality Task Force. EPA-505-B-04-900A / DTIC ADA 427785. March 2005.

IDQTF, 2005b. Uniform Federal Policy for Quality Assurance Project Plans, Evaluating, Assessing, and Documenting Environmental Data Collection and Use Programs, Part 2A: UFP-QAPP Workbook, Final, Version 1. Intergovernmental Data Quality Task Force. EPA-505-B-04-900C / DTIC ADA 427486. March 2005.

FIGURES

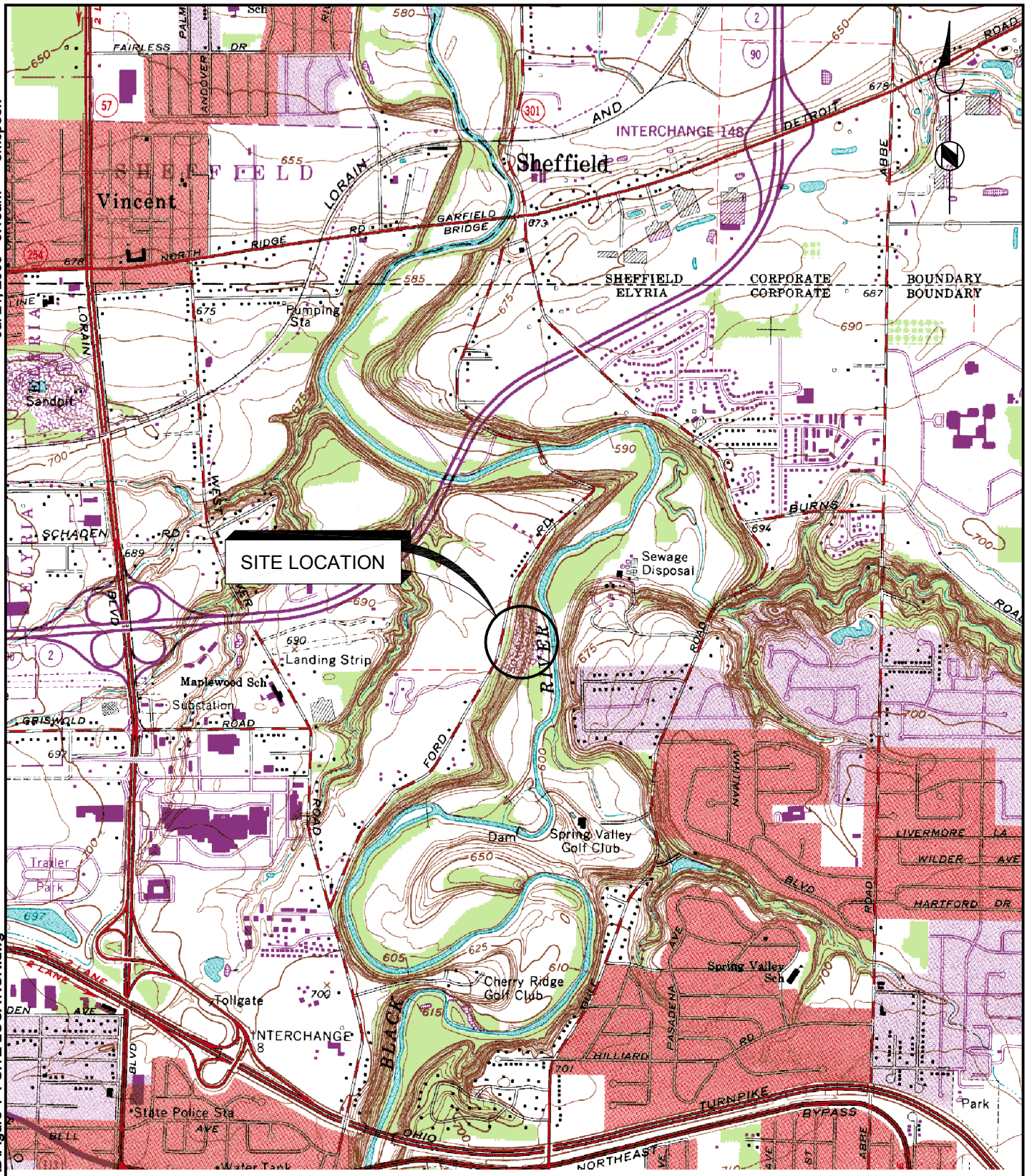

FORD ROAD LANDFILL
ELYRIA OHIO
SOURCE: BASE MAP USGS 7.5 MIN. QUAD., AVON, OH, 1994

0 2000 4000
SCALE IN FEET

BROWN AND CALDWELL

Figure 1-1
SITE LOCATION

Jul 21, 2009 - 9:18am emcpeek

P:\Ford Road\Drawings\CAD\Figure 1-1 SITE LOCATION.dwg

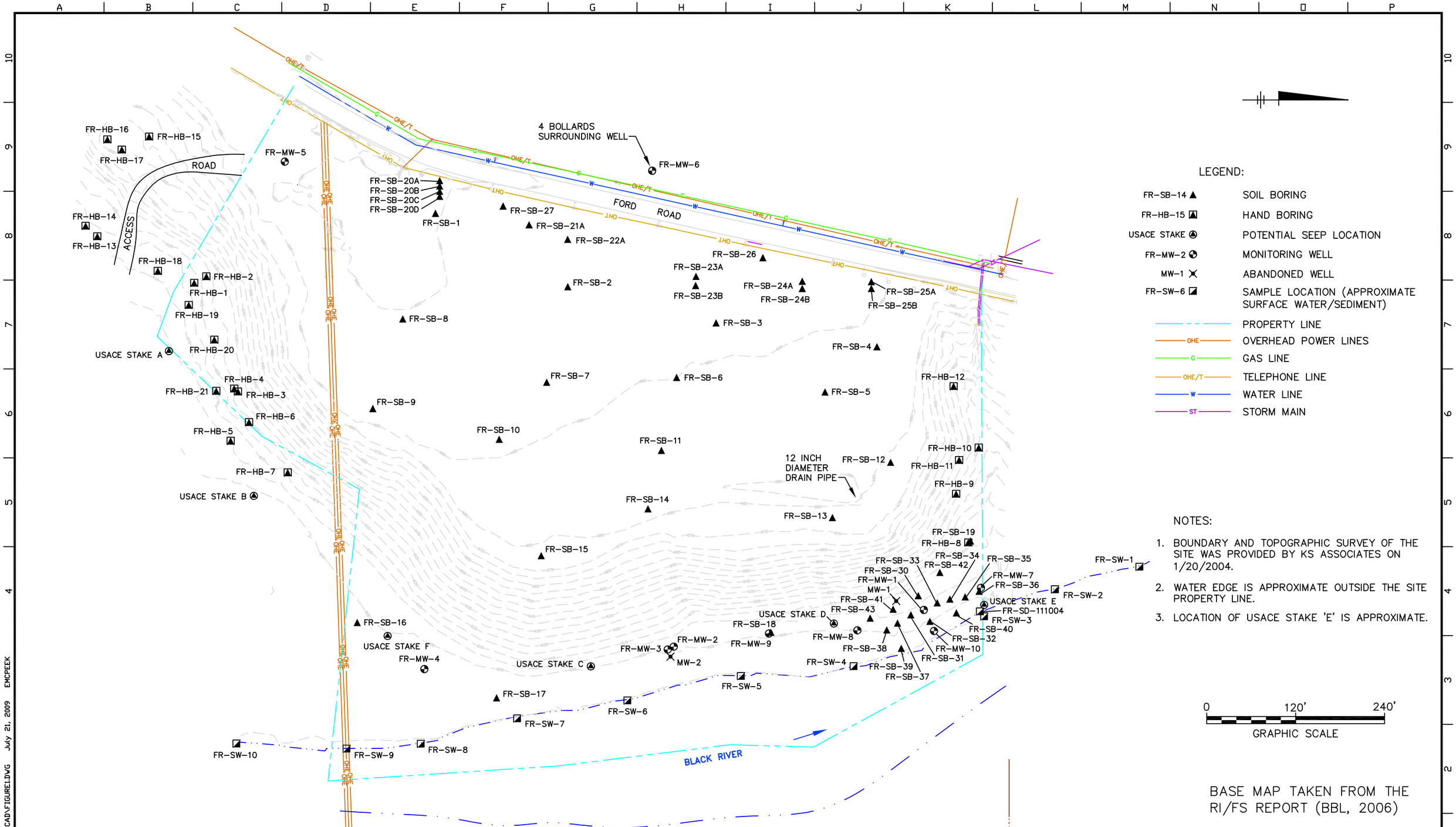

BROWN AND CALDWELL
COLUMBUS, OHIO

SUBMITTED: _____ PROJECT MANAGER DATE: _____
APPROVED: _____ BROWN AND CALDWELL DATE: _____

LINE IS 1 INCH AT FULL SIZE (IF NOT 1" - SCALE ACCORDINGLY)
DESIGNED: JAP
DRAWN: MSK
CHECKED:
CHECKED:
APPROVED:

EXTERNAL REFERENCES

REVISIONS					
ZONE	REV.	DESCRIPTION	BY	DATE	APP.

FORD ROAD LANDFILL, ELYRIA OHIO

SITE PLAN

FILENAME GEO_BOR_LOC.DWG
BC PROJECT NUMBER 137355
CLIENT PROJECT NUMBER
FIGURE NUMBER 1-2

P:\FORD ROAD\DRAWINGS\CAD\FIGURE1.DWG July 21, 2009 EMCPEEK
6/22/09

Chain of Custody Record

BROWN AND CALDWELL

☐ **Columbus Office**
4700 Lakehurst Ct, Suite 100
Dublin, Ohio 43016
(614) 410-6144
(614) 410-3088 fax

☐ **Cleveland Office**
7550 Lucerne Dr, Suite 310
Middleburg Heights, Ohio 44130
(440) 826-4900
(440) 826-3400 fax

☐ **Cincinnati Office**
135 Merchant St, Suite 240
Cincinnati, Ohio 45246
(513) 719-6100
(513) 719-6105 fax

COC No: 948

Page _____ of _____

Lab Quote No:

Lab:

Address:

Phone:

Carrier:

Airbill:

Project Name:

Project Location:

Project Number:

Project Manager:

Sampler's Name:

Sampler's Signature:

Field Phone:

1 None
2 HCl
3 H2SO4
4 HNO3
5 NaOH
6 Other

Container Size and Type (P/G)

Preservative Code

Sample Identification	Sample Date	Sample Time	Sample Type	Matrix	Total # of Cont.											Remarks:

Special Instructions/QC Requirements & Comments:

Relinquished by:	Date/Time:	Received by:	Date/Time:
Relinquished by:	Date/Time:	Received by:	Date/Time:
Relinquished by:	Date/Time:	Received by:	Date/Time:

Cooler TEMPERATURE upon arrival at laboratory _____ °C *(To be filled in by LABORATORY upon receipt)*

Distribution: WHITE - Accompanies shipment YELLOW - Returns with report PINK - Sampler's copy

FIGURE 5-1

SAMPLE CHAIN-OF-CUSTODY FORM

Ford Road Landfill
Elyria, Ohio

ATTACHMENT A. UFP – QAPP WORKSHEETS

Publication Numbers:

EPA: EPA-505-B-04-900C
DoD: DTIC ADA 427486

Intergovernmental Data Quality Task Force

Workbook for Uniform Federal Policy for Quality Assurance Project Plans

Evaluating, Assessing, and Documenting Environmental Data Collection and Use Programs

Part 2A: UFP-QAPP Workbook

This Workbook supplements Part 1 of the UFP-QAPP, the UFP-QAPP Manual. Proper completion of these worksheets requires knowledge of the QAPP elements explained in the Manual.

Final
Version 1
March 2005

Publication Numbers:

EPA: EPA-505-B-04-900C
DoD: DTIC ADA 427486

TABLE OF CONTENTS

INTRODUCTION		
QAPP Worksheet No. 1.	Title and Approval Page	1
QAPP Worksheet No. 2.	QAPP Identifying Information	2
QAPP Worksheet No. 3.	Distribution List	6
QAPP Worksheet No. 4.	Project Personnel Sign-Off Sheet	7
QAPP Worksheet No. 5.	Project Organizational Chart	8
QAPP Worksheet No. 6.	Communication Pathways	9
QAPP Worksheet No. 7.	Personnel Responsibilities and Qualifications Table	10
QAPP Worksheet No. 8.	Special Personnel Training Requirements Table	11
QAPP Worksheet No. 9.	Project Scoping Session Participants Sheet	12
QAPP Worksheet No. 10.	Problem Definition	13
QAPP Worksheet No. 11.	Project Quality Objectives/Systematic Planning Process Statements	14
QAPP Worksheet No. 12.	Measurement Performance Criteria Table	17
QAPP Worksheet No. 13.	Secondary Data Criteria and Limitations Table	33
QAPP Worksheet No. 14.	Summary of Project Tasks	34
QAPP Worksheet No. 15.	Reference Limits and Evaluation Table	36
QAPP Worksheet No. 16.	Project Schedule/Timeline Table	54
QAPP Worksheet No. 17.	Sampling Design and Rationale	55
QAPP Worksheet No. 18.	Sampling Locations and Methods/SOP Requirements Table	56
QAPP Worksheet No. 19.	Analytical SOP Requirements Table	57
QAPP Worksheet No. 20.	Field Quality Control Sample Summary Table	60
QAPP Worksheet No. 21.	Project Sampling SOP Reference Table	61
QAPP Worksheet No. 22.	Field Equipment Calibration, Maintenance, Testing, and Inspection Table	62
QAPP Worksheet No. 23.	Analytical SOP Reference Table	63
QAPP Worksheet No. 24.	Analytical Instrument Calibration Table	66
QAPP Worksheet No. 25.	Analytical Instrument and Equipment Maintenance, Testing, and Inspection Table	70
QAPP Worksheet No. 26.	Sample Handling System	72
QAPP Worksheet No. 27.	Sample Custody Requirements	73
QAPP Worksheet No. 28.	QC Samples Table	76
QAPP Worksheet No. 29.	Project Documents and Records Table	82
QAPP Worksheet No. 30.	Analytical Services Table	83
QAPP Worksheet No. 31.	Planned Project Assessment Table	86
QAPP Worksheet No. 32.	Assessment Findings and Response Actions	87
QAPP Worksheet No. 33.	QA Management Reports Table	88
QAPP Worksheet No. 34.	Sampling and Analysis Verification (Step I) Process Table	89
QAPP Worksheet No. 35.	Sampling and Analysis Validation (Steps IIa and IIb) Process Table	90
QAPP Worksheet No. 36.	Sampling and Analysis Validation (Steps IIa and IIb) Summary Table	91
QAPP Worksheet No. 37.	Data Usability Assessment	92

QAPP Worksheet No. 1

Title and Approval Page

Site Name/Project Name: **Ford Road Landfill Site**
Site Location: **Ford Road, Elyria, Lorain County, Ohio**

Title: **QAPP**
Revision Number: **1**
Revision Date: **8/6/09**
Page: **1 of 92**

Quality Assurance Project Plan for the Ford Road Landfill Remedial Design and Pre-Design Activities
Document Title

United States Environmental Protection Agency, Region 5
Lead Organization

Michael Watkins, Brown and Caldwell
Preparer's Name and Organizational Affiliation

4700 Lakehurst Court, Suite 100, Dublin, OH 43016, 440-826-4900, mwatkins@brwncald.com
Preparer's Address, Telephone Number, and E-mail Address

15/July/2009
Preparation Date (Day/Month/Year)

Brown and Caldwell Project Manager: _____
Signature

James A. Peeples, P.E., Brown and Caldwell, 8/6/09

Brown and Caldwell Project QA Officer: _____
Signature

Andrew G. McCorkle, C.P.G., Brown and Caldwell, 8/6/09

USEPA – Remedial Project Manager: _____
Signature

Demaree Collier, USEPA, Date:_____

Other Approval Signatures: _____
Signature

_____
Printed Name/Title/Date

Document Control Number: _____

QAPP Worksheet No. 2

QAPP Identifying Information

Site Name/Project Name: Ford Road Landfill Site
Site Location: Ford Road, Elyria, Lorain County, Ohio
Site Number/Code: USEPA facility identification number - OHD 980510002
Operable Unit: N/A
Contractor Name: Brown and Caldwell
Contractor Number: N/A
Contract Title: N/A
Work Assignment Number: N/A

1. ***Identify guidance used to prepare QAPP:***
   Uniform Federal Policy for Implementing Quality Systems (EPA-505-F-03-001, Uniform Federal Policy for Quality Assurance Project Plans, Parts 1, 2, and 3 (EPA-505-B-04-900A, B, and C.

2. ***Identify regulatory program***:_CERCLA, Record of Decision dated September 27, 2009 ___

3. ***Identify approval entity***: United States Environmental Protection Agency, Region 5

4. ***Indicate whether the QAPP is a generic or a*** ***project-specific*** ***QAPP.*** **(circle one)**

5. ***List dates of scoping sessions that were held:*** **Meetings and teleconferences in June and** July 2009. Draft *QAPP* submitted in August 2009;

6. ***List dates and titles of QAPP documents written for previous site work, if applicable:***

Title:	***Approval Date:***
QAPP, Remedial Investigation/Feasibility Study (BBL, May 2003)	____May 2003

7. ***List organizational partners (stakeholders) and connection with lead organization:***
   - USEPA, Region 5
   - Ohio EPA
   - Ford Road PRP Group

8. ***List data users:*** as listed above

9. ***If any required QAPP elements and required information are not applicable to the project, then circle the omitted QAPP elements and required information on the attached table. Provide an explanation for their exclusion below:***

Required QAPP Element(s) and Corresponding QAPP Section(s)	Required Information	Cross-reference to Related Documents
Project Management and Objectives		
2.1 Title and Approval Page	- Title and Approval Page	Worksheet No. 1
2.2 Document Format and Table of Contents 2.2.1 Document Control Format 2.2.2 Document Control Numbering System 2.2.3 Table of Contents 2.2.4 QAPP Identifying Information	- Table of Contents - QAPP Identifying Information	Page ii in QAPP Worksheet Nos. 1, 2
2.3 Distribution List and Project Personnel Sign-Off Sheet 2.3.1 Distribution List 2.3.2 Project Personnel Sign-Off Sheet	- Distribution List - Project Personnel Sign-Off Sheet	Worksheet No. 3 Worksheet No. 4
2.4 Project Organization 2.4.1 Project Organizational Chart 2.4.2 Communication Pathways 2.4.3 Personnel Responsibilities and Qualifications 2.4.4 Special Training Requirements and Certification	- Project Organizational Chart - Communication Pathways - Personnel Responsibilities and Qualifications Table - Special Personnel Training Requirements Table	Worksheet No. 5 Worksheet No. 6 Worksheet No. 7\ Worksheet No. 8
2.5 Project Planning/Problem Definition 2.5.1 Project Planning (Scoping) 2.5.2 Problem Definition, Site History, and Background	- Project Planning Session Documentation (including Data Needs tables) - Project Scoping Session Participants Sheet - Problem Definition, Site History, and Background - Site Maps (historical and present)	Worksheet No. 9 Worksheet No. 9 Worksheet No. 10, Section 1.2 in QAPP Figures 1-1 and 1-2 in QAPP
2.6 Project Quality Objectives and Measurement Performance Criteria 2.6.1 Development of Project Quality Objectives Using the Systematic Planning Process 2.6.2 Measurement Performance Criteria	- Site-Specific PQOs - Measurement Performance Criteria Table	Worksheet No. 11 and Section 3.2 in QAPP Worksheet No. 12
2.7 Secondary Data Evaluation	- Sources of Secondary Data and Information - Secondary Data Criteria and Limitations Table	Worksheet No. 13 Worksheet No. 13
2.8 Project Overview and Schedule 2.8.1 Project Overview 2.8.2 Project Schedule	- Summary of Project Tasks - Reference Limits and Evaluation Table - Project Schedule/Timeline Table	Worksheet No. 14 Worksheet No. 15 Worksheet No. 16

Required QAPP Element(s) and Corresponding QAPP Section(s)	Required Information	Cross-reference to Related Documents
Measurement/Data Acquisition		
3.1 Sampling Tasks 3.1.1 Sampling Process Design and Rationale 3.1.2 Sampling Procedures and Requirements 3.1.2.1 Sampling Collection Procedures 3.1.2.2 Sample Containers, Volume, and Preservation 3.1.2.3 Equipment/Sample Containers Cleaning and Decontamination Procedures 3.1.2.4 Field Equipment Calibration, Maintenance, Testing, and Inspection Procedures 3.1.2.5 Supply Inspection and Acceptance Procedures 3.1.2.6 Field Documentation Procedures	- Sampling Design and Rationale - Sample Location Map - Sampling Locations and Methods/ SOP Requirements Table - Analytical Methods/SOP Requirements Table - Field Quality Control Sample Summary Table - Sampling SOPs - Project Sampling SOP References Table - Field Equipment Calibration, Maintenance, Testing, and Inspection Table	Worksheet No. 17 Figures in the FSP Worksheet No. 18 Worksheet No. 23 Worksheet No. 20 Worksheet No. 18 Worksheet No. 23 Worksheet No. 20
3.2 Analytical Tasks 3.2.1 Analytical SOPs 3.2.2 Analytical Instrument Calibration Procedures 3.2.3 Analytical Instrument and Equipment Maintenance, Testing, and Inspection Procedures 3.2.4 Analytical Supply Inspection and Acceptance Procedures	- Analytical SOPs - Analytical SOP References Table - Analytical Instrument Calibration Table - Analytical Instrument and Equipment Maintenance, Testing, and Inspection Table	Attachment B to QAPP Worksheet No. 23 Worksheet No. 24 Worksheet No. 25
3.3 Sample Collection Documentation, Handling, Tracking, and Custody Procedures 3.3.1 Sample Collection Documentation 3.3.2 Sample Handling and Tracking System 3.3.3 Sample Custody	- Sample Collection Documentation Handling, Tracking, and Custody SOPs - Sample Container Identification - Sample Handling Flow Diagram - Example Chain-of-Custody Form and Seal	Worksheet No. 26 and Section 4 in QAPP Section 5 in QAPP Worksheet Nos 26 and 27 and Section 5 in QAPP Figure 5-1 in QAPP
3.4 Quality Control Samples 3.4.1 Sampling Quality Control Samples 3.4.2 Analytical Quality Control Samples	- QC Samples Table - Screening/Confirmatory Analysis Decision Tree	Worksheet No. 28 Worksheet No. 28 and Sections 8.1 and 8.1 in QAPP

Required QAPP Element(s) and Corresponding QAPP Section(s)	Required Information	Cross-reference to Related Documents
3.5 Data Management Tasks 3.5.1 Project Documentation and Records 3.5.2 Data Package Deliverables 3.5.3 Data Reporting Formats 3.5.4 Data Handling and Management 3.5.5 Data Tracking and Control	- Project Documents and Records Table - Analytical Services Table - Data Management SOPs	Worksheet No. 29 Worksheet No. 20 Section 7 in QAPP
Assessment/Oversight		
4.1 Assessments and Response Actions 4.1.1 Planned Assessments 4.1.2 Assessment Findings and Corrective Action Responses	- Assessments and Response Actions - Planned Project Assessments Table - Audit Checklists - Assessment Findings and Corrective Action Responses Table	 Worksheet No. 31 Worksheet No. 31 and Section 11 in QAPP Worksheet No. 32
4.2 QA Management Reports	- QA Management Reports Table	Worksheet No. 33
4.3 Final Project Report		Worksheet No. 33 and Section 7.3 in QAPP
Data Review		
5.1 Overview		
5.2 Data Review Steps 5.2.1 Step I: Verification 5.2.2 Step II: Validation 5.2.2.1 Step IIa Validation Activities 5.2.2.2 Step IIb Validation Activities 5.2.3 Step III: Usability Assessment 5.2.3.1 Data Limitations and Actions from Usability Assessment 5.2.3.2 Activities	- Verification (Step I) Process Table - Validation (Steps IIa and IIb) Process Table - Validation (Steps IIa and IIb) Summary Table - Usability Assessment	Worksheet No. 34 Worksheet No. 35 Worksheet No. 36 Worksheet No. 37
5.3 Streamlining Data Review 5.3.1 Data Review Steps To Be Streamlined 5.3.2 Criteria for Streamlining Data Review 5.3.3 Amounts and Types of Data Appropriate for Streamlining		Section 7.2 in QAPP

Distribution List

QAPP Recipients	Title	Organization	Telephone Number	Fax Number	E-mail Address	Document Control Number
Demaree Collier	Remedial Project Manager	USEPA	312-886-0214		Collier.Demaree@epamail.epa.gov	
Vanessa Steirgerwald Dick, Ph.D	Project Coordinator	OEPA.	330-963-1219		vanessa.steigerwald@epa.state.oh.us	
James A. Peeples, P.E.	Project Manager	Brown and Caldwell	614-410-6144	614-410-3088	jpeeples@brwncald.com	
Andrew G. McCorkle, C.P.G.	QA Officer	Brown and Caldwell	614-410-6144	614-410-3088	amccorkle@brwncald.com	
Brown And Caldwell Field Team	Various	Brown and Caldwell	Various	Various	Various	
Ford Road Landfill PRP Group	PRP Group	Various	Various	Various	Various	
Patrick S. Steerman	PRP Group's Project Coordinator	Steerman Environmental Management & Consulting, LLC	404-329-9006	404-329-9006	psteerman@charter.net	
Brian L. Shields, P.E.	Project Engineer and QA Officer	BBC&M	216-901-1000	216-901-9996	bshields@bbcm.com	
Dorothy Leeson	Quality Assurance Manger	TestAmerica Laboratories, Inc.	330-497-9396	330-497-0772	dorothy.leeson@testamericainc.com	

Project Personnel Sign-Off Sheet

Organization: Brown and Caldwell

Project Personnel	Title	Telephone Number	Signature	Date QAPP Read

Project Organizational Chart

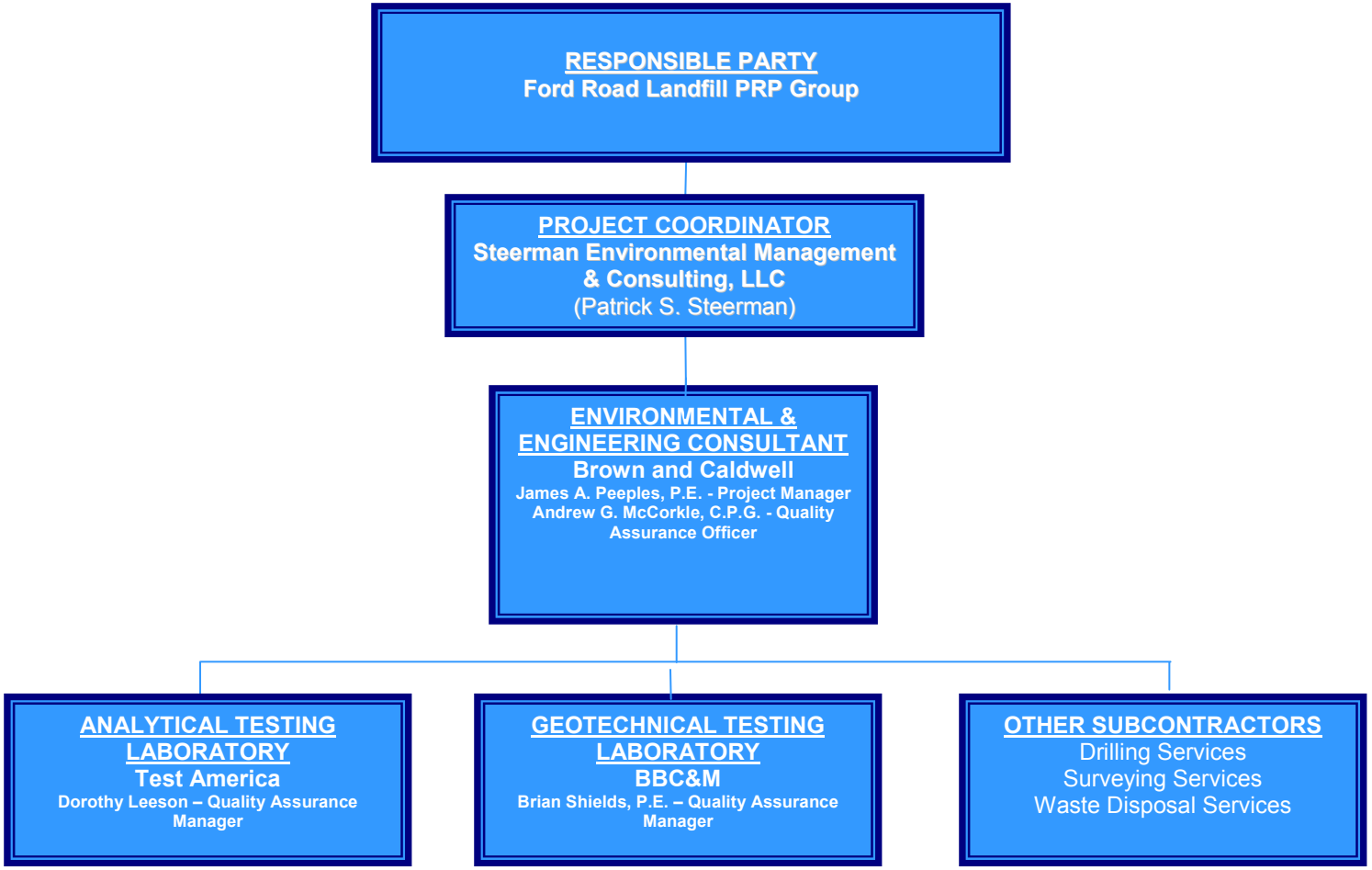

Communication Pathways

Communication Drivers	Responsible Entity	Name	Phone Number	Procedure (Timing, Pathways, etc.)
Contact USEPA	Steerman Environmental Management & Consulting, LLC.	Patrick Steerman	404-329-9006	All written and most verbal from the consultants and contractors for the Group will be made through Mr. Steerman, unless otherwise directed by Mr. Steerman.
Point of Contact at USEPA	USEPA	Demaree Collier	312-886-0214	Materials to be submitted to USEPA will be provided to Ms. Collier.
Point of Contact at OEPA	OEPA	Vanessa Steigerwald Dick	330-963-1219	Materials to be submitted to OEPA will be provided to Ms. Dick.
Manage Project Phases	Brown and Caldwell	James Peeples	614-410-6144	Changes in scope and requests by USEPA or others will be provided by Patrick Steerman. Mr. Peeples will coordinate BC resources accordingly.
QAPP changes in the field	Brown And Caldwell Field Sampling Manager	Michael Watkins	440-826-4900	Field driven adjustments, or non-conformance, to the QAPP will be addressed through Mr. Watkins, and reported to Mr. Peeples.
Reporting Geotechnical Lab Quality Issues	BBC&M	Brian Shields	216-901-9996	Deviations in compliance with QA/QC and ASTM methods will be reported to Mr. Peeples by Mr. Shields.
Reporting Analytical Lab Quality Issues	TestAmerica	Dorothy Leeson	330-497-9396	Deviations in compliance with QA/QC will be reported to Mr. Peeples by Ms. Leeson.
QAPP Amendments	Brown and Caldwell	Michael Watkins	440-826-4900	QAPP amendments, as necessary, will be initiated by Mr. Watkins, after authorized by Mr. Peeples and Mr. Steerman.

Personnel Responsibilities and Qualifications Table

Name	Title	Organizational Affiliation	Responsibilities	Education and Experience Qualifications
Demaree Collier	Remedial Project Manager	USEPA	USEPA Project Coordinator	
Vanessa Steigerwald Dick, Ph.D		OEPA	OEPA Project Coordinator	
Patrick S. Steerman	Project Coordinator	Steerman Environmental Management & Consulting, LLC	Project Coordinator	
James A. Peeples, P.E.	Supervising Engineer	Brown and Caldwell	Project Manager	B.S., Biology; M.S., Agricultural Engineering; 19 years experience
Andrew G. McCorkle, C.P.G.	Supervising Geologist	Brown and Caldwell	QA Manager	B.A., Geology and Mineralogy; 20 years experience
Michael L. Watkins, P.G.	Supervising Geologist	Brown and Caldwell	Field Team Leader	B.S., M.S. Geology; 22 years experience
Brian L. Shields, P.E.	QA Officer	BBC&M	QA Officer	
Dorothy Leeson	QA Officer	TestAmerica	QA Officer	

Special Personnel Training Requirements Table

Project Function	Specialized Training – Title or Description of Course	Training Providers	Training Date	Personnel/Groups Receiving Training	Personnel Titles/ Organizational Affiliation	Location of Training Records/Certificates[1]
HAZWOPER	40-hour initial training as per 29 CFR 1910.120	Various certified out-sourced providers	Various	Field personnel, Project Manager, and other key staff	Various BC staff and drilling subcontractor field staff	BC corporate office, Walnut Creek, CA and BC's Columbus, OH office
HAZWOPER	8-hour annual refresher as per 29 CFR 1910.120	Certified in-house and out-sourced providers	Various	Field personnel, Project Manager, and other key staff	Various BC staff and drilling subcontractor field staff	BC corporate office, Walnut Creek, CA and BC's Columbus, OH office
HAZWOPER	CPR and first aid training as per 29 CFR 1910.120	Out-sourced to certified trainers	Various	Site-Safety Officer on site during fieldwork	Various BC field staff	BC corporate office, Walnut Creek, CA and BC's Columbus, OH office

[1]If training records and/or certificates are on file elsewhere, document their location in this column. If training records and/or certificates do not exist or are not available, then this should be noted.

Project Scoping Session Participants Sheet

Project Name: Remedial Design and Pre-Design Activities Projected Date(s) of Sampling: 2009/2020 Project Manager: James Peeples	Site Name: Ford Road Landfill Site Site Location: Elyria, Lorain County, Ohio

Date of Session: 7/22/09 and 7/23/09
Scoping Session Purpose: Define DQOs and Content/status of RDWP

Name	Title	Affiliation	Phone No.	E-mail Address	Project Role
James Peeples	Supervising Engineer	BC	614-410-6144	jpeeples@brwncald.com	Project Manager
Jon Howland	Principal Engineer	BC	518-472-1988	jhowland@brwncald.com	Geotechnical Engineer, RDWP
Michael Watkins	Supervising Geologist	BC	440-826-4900	mwatkins@brwncald.com	Field Team Leader, QAPP, FSP
Scott Blanchard	Senior Geologist	BC	614-410-6144	sblanchard@brwncald.com	Field Team, HASP, RDWP

Consensus Decisions:

- Geotechnical sampling and testing shall conform to ASTM standards.
- Selected BBC&M as the geotechnical lab and TestAmerica as the analytical lab.

Comments/Decisions:

- Add a "List of Acronyms" page at the front of each document.
- Standardize nomenclature in the RDWP.

Action Items: Complete RDWP for Settling Parties' review by August 6, 2009.

Problem Definition

DATA QUALITY OBJECTIVES (DQOs)

- To evaluate the nature and thickness of cover material atop the landfill and define those areas, if any, with less than two feet of cover soil;
- To identify and define waste materials outside the footprint of the landfill;
- To evaluate and establish slope stability of the landfill, including erosion control, in accordance with applicable regulations and standard engineering principals;
- To define the limits of impacted soils in the northeast corner of the Site and design a permanent remedy for that area that is protective of human health and the environment; and
- To ensure environmental media outside the limits of the landfill meet the cleanup levels described in the SOW and are protective of human health and the environment.

Project Quality Objectives/Systematic Planning Process Statements

Who will use the data?

- Data will be used by the Ford Road Landfill PRP Group and its contractors, USEPA, OEPA and USACE.

What will the data be used for?

- The data will be used to evaluate the aforementioned DQOs and to develop a RD that meets the requirements of the CD, SOW and ROD. The project Performance Standards are those described in the SOW;
- Analytical sensitivity must be adequate to detect and quantify the concentrations of each of the listed constituents to the concentrations of their respective action levels;
- The data will be used to define the limits of the landfill, evaluate the thickness of the cover soil, evaluate slope stability, and to define the limits of excavation in the LNAPL-impacted area.

What types of data are required?

- Groundwater quality data are needed for the parameters, well locations, and monitoring frequency as stated in the FSP.
- Groundwater/LNAPL elevation data are needed from the wells and at the frequency as stated in the FSP.
- Soil/waste quality data are needed for the parameters and locations described in the FSP.
- Geotechnical data are needed for the parameters and locations described in the FSP.
- Waste characterization data are needed for the parameters and wastes described in the FSP.
- Survey data are needed for the locations described in the FSP.

How good do the data need to be?

- 95 percent of the data from a given sampling or measurement event will be useable.
- A primary Measurement Performance Criterion is adequate analytical sensitivity to meet the Performance Standards listed on Worksheet No. 15

How much data are needed?

- The spatial distribution of the data is specified in the FSP.
- The temporal distribution of the data is specified in the FSP.
- The specific analytical parameters to be tested are specified in the FSP.

Project Quality Objectives/Systematic Planning Process Statements

How will the data be collected?

- The aqueous media samples (e.g., groundwater, surface water, springs, leachate, etc.) destined for chemical analysis will be collected using the procedures specified in the FSP. The groundwater quality samples will be collected from monitoring wells following low-flow collection methodology.
- The specified aqueous media samples will be analyzed by TestAmerica following Contract Laboratory Program (CLP) analytical methodology as described in Attachment B.
- Groundwater and LNAPL thickness and elevation data will be determined from depth to fluid field measurements using electronic water level meters and interface probes.
- The solid media samples (soil, waste, sediment, etc.) destined for chemical analysis will be collected using the procedures specified in the FSP.
- The specified solid media samples will be analyzed by TestAmerica following Contract Laboratory Program (CLP) analytical methodology as described in Attachment B.
- Geotechnical samples will be collected in the appropriate containers and analyzed by the geotechnical laboratory in accordance with the appropriate ASTM method.
- Survey data will be obtained by a licensed Ohio surveyor in accordance with the required horizontal and vertical accuracy.

Who will generate the data?

- Qualified personnel from BC will collect the environmental media samples.
- Qualified personnel from BC will perform the liquid level measurements.
- Qualified personnel from the designated geotechnical and analytical laboratories complete the testing/analysis and report the results.
- Qualified personnel from the designated surveying company will conduct the horizontal and vertical survey of sampling locations.

How will the data be reported?

- Field data will be recorded and reported as specified in the FSP.
- Laboratory analytical data will be reported to BC in two formats:
  1. Laboratory summary report including sample results, a case-narrative, and a QA summary report.
  2. Electronic data deliverable (EDD) of the aforementioned in a BC-specified format.
- Geotechnical data will be reported to BC in hard copy format, including all calculation sheets.
- Survey data will be reported to BC in both hard copy and electronic format, and will include three columns of data: the northing coordinate, the easting coordinate, and the elevation (MSL-mean sea level).
- Data will be reported to USEPA as appendices to the Remedial Design Report, with the data summarized in tables contained within the body of the report. An electronic version of the complete report, in PDF format, will also be provided.

Project Quality Objectives/Systematic Planning Process Statements

How will the data be archived?

- Aforementioned electronic files will be maintained in their native formats on a server located in BC's Columbus, Ohio office.
- Tape backups of the files on the servers are made periodically which are stored at an off-site location for ten years.
- A paper copy of the complete Remedial Design Report will be maintained either at the BC office in Columbus, Ohio or an off-site document repository for a time period of 10 years following USEPA's approval of the work, as specified in the Consent Decree.

Measurement Performance Criteria Table

Matrix	Aqueous
Analytical Group	VOCs
Concentration Level	Low

Sampling Procedure[1]	Analytical Method/SOP[2]	Data Quality Indicators (DQIs)	Measurement Performance Criteria	QC Sample and/or Activity Used to Assess Measurement Performance	QC Sample Assesses Error for Sampling (S), Analytical (A) or both (S&A)
Groundwater Sampling	SW-846 8260 B	Precision/Laboratory	RPD < 30% or the laboratory-specified recovery limits	Laboratory Duplicate	A
Groundwater Sampling	SW-846 8260 B	Precision/Sample Collection	RPD < 30% or the laboratory-specified recovery limits	Field Duplicate	S & A
Groundwater Sampling	SW-846 8260 B	Accuracy/Bias	RPD < 30% or the laboratory-specified recovery limits	MS/MSD	S & A
Groundwater Sampling	SW-846 8260 B	Accuracy/Bias	RPD < 30% or the laboratory-specified range	Laboratory Control Sample	A
Groundwater Sampling	SW-846 8260 B	Accuracy/Bias	Percent recovery within laboratory-specified recovery limits: (DBF 73-122%) (1,2-DCA-d4 61-128%) (Toluene-d8 76-110%) (4-BFB 74-116)	Surrogate	A
Groundwater Sampling	SW-846 8260 B	Accuracy/ Lab contamination	No Target Compounds>RL; no common lab contaminants >5XRL.	Method Blank	A
Groundwater Sampling	SW-846 8260 B	Accuracy/ Transport contamination	No Target Compounds>RL; no common lab contaminants >5XRL.	Trip Blank	A
Groundwater Sampling	SW-846 8260 B	Accuracy/ Field contamination	No Target Compounds>RL; no common lab contaminants >5XRL.	Field Blank	S & A

Measurement Performance Criteria Table

Matrix	Aqueous
Analytical Group	VOCs
Concentration Level	Low

Sampling Procedure[1]	**Analytical Method/SOP[2]**	**Data Quality Indicators (DQIs)**	**Measurement Performance Criteria**	**QC Sample and/or Activity Used to Assess Measurement Performance**	**QC Sample Assesses Error for Sampling (S), Analytical (A) or both (S&A)**
Groundwater Sampling	SW-846 8260 B	Accuracy/ Holding Time	< 14 days until analysis	Reported sample data	A
Groundwater Sampling	SW-846 8260 B	Completeness	>90% field samples >90% lab analyses	Reported sample data	S & A
Groundwater Sampling	SW-846 8260 B	Representativeness	RPD <30% for detected data, ND comparison	Field Duplicate	S & A
Groundwater Sampling	SW-846 8260 B	Sensitivity	QL ≤ Associated Performance Standards	Reported sample data	A

[1] Reference number from QAPP Worksheet No. 21.
[2] Reference number from QAPP Worksheet No. 23.

Measurement Performance Criteria Table

Matrix	Soil
Analytical Group	VOCs
Concentration Level	Low

Sampling Procedure	Analytical Method/SOP[2]	Data Quality Indicators (DQIs)	Measurement Performance Criteria	QC Sample and/or Activity Used to Assess Measurement Performance	QC Sample Assesses Error for Sampling (S), Analytical (A) or both (S&A)
Soil Sampling	SW-846 8260 B	Precision/Laboratory	RPD < 30% or the laboratory-specified recovery limits	Laboratory Duplicate	A
Soil Sampling	SW-846 8260 B	Precision/Sample Collection	RPD < 30% or the laboratory-specified recovery limits	Field Duplicate	S & A
Soil Sampling	SW-846 8260 B	Accuracy/Bias	RPD < 30% or the laboratory-specified recovery limits	MS/MSD	S & A
Soil Sampling	SW-846 8260 B	Accuracy/Bias	RPD < 30% or the laboratory-specified range	Laboratory Control Sample	A
Soil Sampling	SW-846 8260 B	Accuracy/Bias	Percent recovery within laboratory-specified recovery limits: (DBF 59-138%) (1,2-DCA-d4 61-130%) (Toluene-d8 60-143%) (4-BFB 47-158)	Surrogate	A
Soil Sampling	SW-846 8260 B	Accuracy/ Lab contamination	No Target Compounds>RL; no common lab contaminants >5XRL.	Method Blank	A
Soil Sampling	SW-846 8260 B	Accuracy/ Transport contamination	No Target Compounds>RL; no common lab contaminants >5XRL.	Trip Blank	A
Soil Sampling	SW-846 8260 B	Accuracy/ Field contamination	No Target Compounds>RL; no common lab contaminants >5XRL.	Field Blank	S & A
Soil Sampling	SW-846 8260 B	Accuracy/ Holding Time	< 14 days until analysis	Reported sample data	A
Soil Sampling	SW-846 8260 B	Completeness	>90% field samples >90% lab analyses	Reported sample data	S & A

Measurement Performance Criteria Table

Matrix	Soil
Analytical Group	VOCs
Concentration Level	Low

Sampling Procedure	Analytical Method/SOP[2]	Data Quality Indicators (DQIs)	Measurement Performance Criteria	QC Sample and/or Activity Used to Assess Measurement Performance	QC Sample Assesses Error for Sampling (S), Analytical (A) or both (S&A)
Soil Sampling	SW-846 8260 B	Representativeness	RPD <30% for detected data, ND comparison	Field Duplicate	S & A
Soil Sampling	SW-846 8260 B	Sensitivity	QL ≤ Associated Performance Standards	Reported sample data	A

[1] Reference number from QAPP Worksheet No. 21.
[2] Reference number from QAPP Worksheet No. 23.

Measurement Performance Criteria Table

Matrix	Aqueous
Analytical Group	SVOCs
Concentration Level	Standard

Sampling Procedure	Analytical Method/SOP[2]	Data Quality Indicators (DQIs)	Measurement Performance Criteria	QC Sample and/or Activity Used to Assess Measurement Performance	QC Sample Assesses Error for Sampling (S), Analytical (A) or both (S&A)
Groundwater Sampling	SW-846 8270C	Precision/Laboratory	RPD <30%	Laboratory Duplicate	A
Groundwater Sampling	SW-846 8270C	Precision/Sample Collection	RPD <30%	Field Duplicate	S & A
Groundwater Sampling	SW-846 8270C	Accuracy/Bias	RPD < 30% or the laboratory-specified recovery limits	MS/MSD	S & A
Groundwater Sampling	SW-846 8270C	Accuracy/Bias	RPD < 30% or the laboratory-specified range	Laboratory Control Sample	A
Groundwater Sampling	SW-846 8270C	Accuracy/Bias	Percent recovery within laboratory-specified recovery limits: (2-FBP 28-110%) (2-FP 10-110%) (246-TBP 22-120%) (NB-d5 27-111%) (Phenol-d5 10-110% (TP-d14 37-119%)	Surrogate	A
Groundwater Sampling	SW-846 8270C	Accuracy/ Lab contamination	No Target Compounds>RL; no common lab contaminants >5xRL	Method Blank	A
Groundwater Sampling	SW-846 8270C	Accuracy/ Transport contamination	No Target Compounds>RL; no common lab contaminants >5xRL	Trip Blank	A
Groundwater Sampling	SW-846 8270C	Accuracy/ Field contamination	No Target Compounds>RL; no common lab contaminants >5xRL	Field Blank	S & A
Groundwater Sampling	SW-846 8270C	Accuracy/ Holding Time	< 14 days until extraction; 40 to analysis	Reported sample data	A
Groundwater Sampling	SW-846 8270C	Completeness	>90% field samples >90% lab analyses	Reported sample data	S & A

Measurement Performance Criteria Table

Matrix	Aqueous
Analytical Group	SVOCs
Concentration Level	Low

Sampling Procedure	Analytical Method/SOP[2]	Data Quality Indicators (DQIs)	Measurement Performance Criteria	QC Sample and/or Activity Used to Assess Measurement Performance	QC Sample Assesses Error for Sampling (S), Analytical (A) or both (S&A)
Groundwater Sampling	SW-846 8270C	Representativeness	RPD <30% for detected data, ND comparison	Field Duplicate	S & A
Groundwater Sampling	SW-846 8270C	Sensitivity	QL ≤ Associated Performance Standards	Reported sample data	A

Measurement Performance Criteria Table

Matrix	Soil
Analytical Group	SVOCs
Concentration Level	Standard

Sampling Procedure	Analytical Method/SOP[2]	Data Quality Indicators (DQIs)	Measurement Performance Criteria	QC Sample and/or Activity Used to Assess Measurement Performance	QC Sample Assesses Error for Sampling (S), Analytical (A) or both (S&A)
Soil Sampling	SW-846 8270 C	Precision/Laboratory	RPD <30%	Laboratory Duplicate	A
Soil Sampling	SW-846 8270C	Precision/Sample Collection	RPD <30%	Field Duplicate	S & A
Soil Sampling	SW-846 8270C	Accuracy/Bias	RPD < 30% or the laboratory-specified recovery limits	MS/MSD	S & A
Soil Sampling	SW-846 8270C	Accuracy/Bias	RPD < 30% or the laboratory-specified range	Laboratory Control Sample	A
Soil Sampling	SW-846 8270C	Accuracy/Bias	Percent recovery within laboratory-specified recovery limits: (2-FBP 34-110%) (2-FP 26-110%) (246-TBP 10-118%) (NB-d5 24-225%) (Phenol-d5 28-110% (TP-d14 41-119%)	Surrogate	A
Soil Sampling	SW-846 8270C	Accuracy/ Lab contamination	No Target Compounds>RL; no common lab contaminants >5xRL	Method Blank	A
Soil Sampling	SW-846 8270C	Accuracy/ Transport contamination	No Target Compounds>RL; no common lab contaminants >5xRL	Trip Blank	A
Soil Sampling	SW-846 8270C	Accuracy/ Field contamination	No Target Compounds>RL; no common lab contaminants >5xRL	Field Blank	S & A
Soil Sampling	SW-846 8270C	Accuracy/ Holding Time	< 7 days until extraction; 40 to analysis	Reported sample data	A
Groundwater Sampling	SW-846 8270C	Completeness	>90% field samples >90% lab analyses	Reported sample data	S & A

Measurement Performance Criteria Table

Matrix	Soil
Analytical Group	SVOCs
Concentration Level	Low

Sampling Procedure[1]	**Analytical Method/SOP[2]**	**Data Quality Indicators (DQIs)**	**Measurement Performance Criteria**	**QC Sample and/or Activity Used to Assess Measurement Performance**	**QC Sample Assesses Error for Sampling (S), Analytical (A) or both (S&A)**
Groundwater Sampling	SW-846 8270C	Representativeness	RPD <30% for detected data, ND comparison	Field Duplicate	S & A
Groundwater Sampling	SW-846 8270C	Sensitivity	QL ≤ Associated Performance Standards	Reported sample data	A

Measurement Performance Criteria Table

Matrix	Water
Analytical Group	PCBs
Concentration Level	Standard

Sampling Procedure[1]	Analytical Method/SOP[2]	Data Quality Indicators (DQIs)	Measurement Performance Criteria	QC Sample and/or Activity Used to Assess Measurement Performance	QC Sample Assesses Error for Sampling (S), Analytical (A) or both (S&A)
Groundwater Sampling	SW-846 8082	Precision/Laboratory	RPD < 30%	Laboratory Duplicate	A
Groundwater Sampling	SW-846 8082	Precision/Sample Collection	RPD < 30%	Field Duplicate	S & A
Groundwater Sampling	SW-846 8082	Accuracy/Bias	RPD < 30% or the laboratory-specified recovery limits	MS/MSD	S & A
Groundwater Sampling	SW-846 8082	Accuracy/Bias	RPD < 30% or the laboratory-specified range	Laboratory Control Sample	A
Groundwater Sampling	SW-846 8082	Accuracy/Bias	Percent recovery within laboratory-specified recovery limits: (DSBP 10-199%) (TCMX 10-196%)	Surrogate	A
Groundwater Sampling	SW-846 8082	Accuracy/ Lab contamination	No Target Compounds>RL	Method Blank	A
Groundwater Sampling	SW-846 8082	Accuracy/ Transport contamination	No Target Compounds>RL	Trip Blank	A
Groundwater Sampling	SW-846 8082	Accuracy/ Field contamination	No Target Compounds>RL	Field Blank	S & A
Groundwater Sampling	SW-846 8082	Accuracy/ Holding Time	< 7 days until extraction; 40 to analysis	Reported sample data	A
Groundwater Sampling	SW-846 8082	Completeness	>90% field samples >90% lab analyses	Reported sample data	S & A

Measurement Performance Criteria Table

Matrix	Water
Analytical Group	PCBs
Concentration Level	Standard

Sampling Procedure[1]	**Analytical Method/SOP[2]**	**Data Quality Indicators (DQIs)**	**Measurement Performance Criteria**	**QC Sample and/or Activity Used to Assess Measurement Performance**	**QC Sample Assesses Error for Sampling (S), Analytical (A) or both (S&A)**
Groundwater Sampling	SW-846 8082	Representativeness	RPD <30% for detected data, ND comparison	Field Duplicate	S & A
Groundwater Sampling	SW-846 8082	Sensitivity	QL ≤ Associated Performance Standards	Reported sample data	A

Measurement Performance Criteria Table

Matrix	Soil
Analytical Group	PCBs
Concentration Level	Standard

Sampling Procedure	Analytical Method/SOP[2]	Data Quality Indicators (DQIs)	Measurement Performance Criteria	QC Sample and/or Activity Used to Assess Measurement Performance	QC Sample Assesses Error for Sampling (S), Analytical (A) or both (S&A)
Soil Sampling	SW-846 8082	Precision/Laboratory	RPD <30%	Laboratory Duplicate	A
Soil Sampling	SW-846 8082	Precision/Sample Collection	RPD <30%	Field Duplicate	S & A
Soil Sampling	SW-846 8082	Accuracy/Bias	RPD < 30% or the laboratory-specified recovery limits	MS/MSD	S & A
Soil Sampling	SW-846 8082	Accuracy/Bias	RPD < 30% or the laboratory-specified range	Laboratory Control Sample	A
Soil Sampling	SW-846 8082	Accuracy/Bias	Percent recovery within laboratory-specified recovery limits: (DSBP 10-127%) (TCMX 27 -130%)	Surrogate	A
Soil Sampling	SW-846 8082	Accuracy/ Lab contamination	No Target Compounds>RL	Method Blank	A
Soil Sampling	SW-846 8082B	Accuracy/ Transport contamination	No Target Compounds>RL	Trip Blank	A
Soil Sampling	SW-846 8082	Accuracy/ Field contamination	No Target Compounds>RL	Field Blank	S & A
Soil Sampling	SW-846 8082	Accuracy/ Holding Time	< 14 days until extraction; 40 to analysis	Reported sample data	A
Soil Sampling	SW-846 8082	Completeness	>90% field samples >90% lab analyses	Reported sample data	S & A

Measurement Performance Criteria Table

Matrix	Aqueous
Analytical Group	PCBs
Concentration Level	Low

Sampling Procedure	Analytical Method/SOP[2]	Data Quality Indicators (DQIs)	Measurement Performance Criteria	QC Sample and/or Activity Used to Assess Measurement Performance	QC Sample Assesses Error for Sampling (S), Analytical (A) or both (S&A)
Groundwater Sampling	SW-846 8082	Representativeness	RPD <30% for detected data, ND comparison	Field Duplicate	S & A
Groundwater Sampling	SW-846 8082	Sensitivity	QL ≤ Associated Performance Standards	Reported sample data	A

Measurement Performance Criteria Table

Matrix	Aqueous
Analytical Group	Metals
Concentration Level	Standard

Sampling Procedure	Analytical Method/SOP[2]	Data Quality Indicators (DQIs)	Measurement Performance Criteria	QC Sample and/or Activity Used to Assess Measurement Performance	QC Sample Assesses Error for Sampling (S), Analytical (A) or both (S&A)
Groundwater Sampling	SW-846 6010B/ 7470A	Precision/Laboratory	RPD <20%	Laboratory Duplicate	A
Groundwater Sampling	SW-846 6010B/ 7470A	Precision/Sample Collection	RPD <20%	Field Duplicate	S & A
Groundwater Sampling	SW-846 6010B/ 7470A	Accuracy/Bias	RPD < 20%	MS/MSD	S & A
Groundwater Sampling	SW-846 6010B/ 7470A	Accuracy/Bias	RPD < 20%	Laboratory Control Sample	A
Groundwater Sampling	SW-846 6010B/ 7470A	Accuracy/ Lab contamination	No target analytes > RL For common laboratory contaminants, no analytes >2x RL.. If MB is biased high and associated samples are below the RL or 20X the blank the data is accepted.	Method Blank	A
Groundwater Sampling	SW-846 6010B/ 7470A	Accuracy/ Transport contamination	No Target Compounds>RL	Trip Blank	A
Groundwater Sampling	SW-846 6010B/ 7470A	Accuracy/ Field contamination	No Target Compounds>RL	Field Blank	S & A
Groundwater Sampling	SW-846 6010B/ 7470A	Accuracy/ Holding Time	180 Days / Hg in 28 days	Reported sample data	A
Groundwater Sampling	SW-846 6010B/ 7470A	Completeness	>90% field samples >90% lab analyses	Reported sample data	S & A

Measurement Performance Criteria Table

Matrix	Aqueous
Analytical Group	Metals
Concentration Level	Standard

Sampling Procedure	Analytical Method/SOP[2]	Data Quality Indicators (DQIs)	Measurement Performance Criteria	QC Sample and/or Activity Used to Assess Measurement Performance	QC Sample Assesses Error for Sampling (S), Analytical (A) or both (S&A)
Groundwater Sampling	SW-846 6010B/ 7470A	Representativeness	RPD <20% for detected data, ND comparison	Field Duplicate	S & A
Groundwater Sampling	SW-846 6010B/ 7470A	Sensitivity	QL ≤ Associated Performance Standards	Reported sample data	A

Measurement Performance Criteria Table

Matrix	Soil
Analytical Group	Metals
Concentration Level	Standard

Sampling Procedure	Analytical Method/SOP[2]	Data Quality Indicators (DQIs)	Measurement Performance Criteria	QC Sample and/or Activity Used to Assess Measurement Performance	QC Sample Assesses Error for Sampling (S), Analytical (A) or both (S&A)
Soil Sampling	SW-846 6010B/ 7470A	Precision/Laboratory	RPD <20%	Laboratory Duplicate	A
Soil Sampling	SW-846 6010B/ 7470A	Precision/Sample Collection	RPD <20%	Field Duplicate	S & A
Soil Sampling	SW-846 6010B/ 7470A	Accuracy/Bias	RPD < 20%	MS/MSD	S & A
Soil Sampling	SW-846 6010B/ 7470A	Accuracy/Bias	RPD < 20%	Laboratory Control Sample	A
Soil Sampling	SW-846 6010B/ 7470A	Accuracy/ Lab contamination	No target analytes > RL For common laboratory contaminants, no analytes >2x RL.. If MB is biased high and associated samples are below the RL or 20X the blank the data is accepted.	Method Blank	A
Soil Sampling	SW-846 6010B/ 7470A	Accuracy/ Transport contamination	No Target Compounds>RL	Trip Blank	A
Soil Sampling	SW-846 6010B/ 7470A	Accuracy/ Field contamination	No Target Compounds>RL	Field Blank	S & A
Soil Sampling	SW-846 6010B/ 7470A	Accuracy/ Holding Time	180 Days / Hg in 28 days	Reported sample data	A
Soil Sampling	SW-846 6010B/ 7470A	Completeness	>90% field samples >90% lab analyses	Reported sample data	S & A

Measurement Performance Criteria Table

Matrix	Soil
Analytical Group	Metals
Concentration Level	Standard

Sampling Procedure	Analytical Method/SOP[2]	Data Quality Indicators (DQIs)	Measurement Performance Criteria	QC Sample and/or Activity Used to Assess Measurement Performance	QC Sample Assesses Error for Sampling (S), Analytical (A) or both (S&A)
Soil Sampling	SW-846 6010B/ 7470A	Representativeness	RPD <20% for detected data, ND comparison	Field Duplicate	S & A
Soil Sampling	SW-846 6010B/ 7470A	Sensitivity	QL ≤ Associated Performance Standards	Reported sample data	A

Secondary Data Criteria and Limitations Table

Secondary Data	Data Source (Originating Organization, Report Title, and Date)	Data Generator(s) (Originating Org., Data Types, Data Generation/Collection Dates)	How Data Will Be Used	Limitations on Data Use
Analytical and geotechnical data contained in the 2006 RI/FS Report prepared by BBL.	RI/FS Report (BBL, 2006),	BBL and H&A collected data from 2003 to 2005	Data ***were*** used to evaluate remedial alternatives for the Site.	Data are used as reference.

Summary of Project Tasks

Field Sampling Tasks:
- Liquid level measurements.
- Collection of soil boring and bulk soil samples for geotechnical testing.

Analysis Tasks:
- Soil samples will be subjected to specific geotechnical tests.
- Environmental media samples will be subjected to analytical testing as needed.

Quality Control Tasks:
- Collect field duplicates, trip blanks, field blanks, and MS/MSD samples as appropriate.

Secondary Data:
- See Worksheet No. 13

Data Management Tasks:
- BC will manage the geotechnical and analytical data in data spreadsheets and/or a relational database.

Documentation and Records:
- Records will prepared while sampling in the form of field logbook entries and completion of field forms, as appropriate.
- Chain-of-custody forms will be maintained.
- Data documentation and reporting by the laboratories will be in accordance with the relevant ASTM methods, laboratory SOPs, and QA Manuals.

Data Deliverables:
- Geotechnical data will be provided in hard copy format, including all calcuations.
- Analytical data will be provided as electronic data deliverable (EDD) and data summary reports completed by TestAmerica.

Field Data Review;
- Field data review records reviewed for completeness and accuracy within one week after sample collection.

Data Review Tasks:
- Verification of data completeness.
- Review of samples data reports and QA summary reports to verify compliance with the MPCs on Worksheet No. 12,

Summary of Project Tasks

Data Reporting:

- Paper copies of laboratory summary report and QA report.
- EDD for analytical data from TestAmerica.
- Summary tables and figures in reports to USEPA, as well as paper copy of the raw data.

Reference Limits and Evaluation Table

Matrix:	Groundwater
Analytical Group:	VOCs
Concentration Level:	Low

Analyte	CAS Number	Project Action Limit[1] (µg/l)	Project Quantitation Limit (µg/l)	Achievable Laboratory Limits (µg/l)	
				MDL	RL
Acetone			10	1.1	10
Benzene		5	1	0.13	1
Bromodichloromethane		80	1	0.15	1
Bromoform		80	1	0.64	1
Bromomethane			1	0.41	1
2-Butanone			10	0.57	10
Carbon disulfide			1	0.13	1
Carbon tetrachloride		5	1	0.13	1
Chlorobenzene		100	1	0.15	1
Dibromochloromethane			1	0.18	1
Chloroethane			1	0.29	1
Chloroform		80	1	0.16	1
Chloromethane			1	0.3	1
Cyclohexane			1	0.12	1
1,2-Dibromo-3-chloropropane		0.2	2	0.67	2
1,2-Dibromoethane		0.05	1	0.24	1
1,2-Dichlorobenzene		600	1	0.13	1
1,3-Dichlorobenzene			1	0.14	1
1,4-Dichlorobenzene		75	1	0.13	1
Dichlorodifluoromethane			1	0.31	1
1,1-Dichloroethane		7	1	0.15	1
1,2-Dichloroethane		5	1	0.22	1
cis-1,2-Dichloroethene		70	1	0.17	1

Reference Limits and Evaluation Table

Matrix:	Groundwater
Analytical Group:	VOCs
Concentration Level:	Low

Analyte	CAS Number	Project Action Limit[1] (µg/l)	Project Quantitation Limit (µg/l)	Achievable Laboratory Limits (µg/l)	
				MDL	RL
trans-1,2-Dichloroethene		100	1	0.19	1
1,1-Dichloroethene			1	0.19	1
1,2-Dichloropropane		5	1	0.18	1
cis-1,3-Dichloropropene			1	0.14	1
trans-1,3-Dichloropropene			1	0.19	1
Ethylbenzene		700	1	0.17	1
2-Hexanone			10	0.41	10
Isopropylbenzene			1	0.13	1
Methyl acetate			10	0.38	10
Methylcyclohexane			1	0.13	1
Methylene chloride		5	1	0.33	1
4-Methyl-2-pentanone			10	0.32	10
Methyl tert-butyl ether			5	0.17	5
Styrene		100	1	0.11	1
1,1,2,2-Tetrachloroethane			1	0.18	1
Tetrachloroethene		5	1	0.29	1
Toluene		1000	1	0.13	1
1,2,4-Trichlorobenzene		70	1	0.15	1
1,1,1-Trichloroethane		200	1	0.22	1
1,1,2-Trichloroethane		5	1	0.27	1
Trichloroethene		5	1	0.17	1
Trichlorofluoromethane			1	0.21	1

Reference Limits and Evaluation Table

Matrix:	Groundwater
Analytical Group:	VOCs
Concentration Level:	Low

Analyte	CAS Number	Project Action Limit[1] (µg/l)	Project Quantitation Limit (µg/l)	Achievable Laboratory Limits (µg/l)	
				MDL	RL
1,1,2-Trichloro-1,2,2-trifluoroethane			1	0.28	1
Vinyl chloride		2	1	0.22	1
Xylenes (total)		10000	2	0.28	2

MDL = Minimum detection limit
RL = Reporting limit
1 = Based on the MCLs, SMCLs and RBCs defined in the SOW

Reference Limits and Evaluation Table

Matrix:	Soil
Analytical Group:	VOCs
Concentration Level:	Low

Analyte	CAS Number	Project Action Limit[1] (µg/kg)	Project Quantitation Limit (µg/kg)	Achievable Laboratory Limits (µg/kg)	
				MDL	RL
Acetone			20	6.3	20
Benzene			5	0.23	5
Bromodichloromethane			5	0.28	5
Bromoform			5	0.33	5
Bromomethane			5	0.54	5
2-Butanone			20	1.4	20
Carbon disulfide			5	0.44	5
Carbon tetrachloride			5	0.37	5
Chlorobenzene			5	0.33	5
Dibromochloromethane			5	0.55	5
Chloroethane			5	0.86	5
Chloroform			5	0.29	5
Chloromethane			5	0.41	5
Cyclohexane			10	0.33	10
1,2-Dibromo-3-chloropropane			10	1.3	10
1,2-Dibromoethane			5	0.5	5
1,2-Dichlorobenzene			5	0.36	5
1,3-Dichlorobenzene			5	0.35	5
1,4-Dichlorobenzene			5	0.66	5
Dichlorodifluoromethane			5	0.5	5
1,1-Dichloroethane			5	0.36	5

Reference Limits and Evaluation Table

Matrix:	Soil
Analytical Group:	VOCs
Concentration Level:	Low

Analyte	CAS Number	Project Action Limit[1] (µg/kg)	Project Quantitation Limit (µg/kg)	Achievable Laboratory Limits (µg/kg)	
				MDL	RL
1,2-Dichloroethane			5	0.34	5
cis-1,2-Dichloroethene			5	0.36	5
trans-1,2-Dichloroethene			5	0.41	5
1,1-Dichloroethene			5	0.52	5
1,2-Dichloropropane			5	0.69	5
cis-1,3-Dichloropropene			5	0.34	5
trans-1,3-Dichloropropene			5	0.54	5
Ethylbenzene			5	0.26	5
2-Hexanone			20	0.63	20
Isopropylbenzene			5	0.16	5
Methyl acetate			10	1.4	10
Methylcyclohexane			10	0.31	10
Methylene chloride			5	0.67	5
4-Methyl-2-pentanone			20	0.54	20
Methyl tert-butyl ether			20	0.43	20
Styrene			5	0.15	5
1,1,2,2-Tetrachloroethane			5	0.34	5
Tetrachloroethene			5	0.52	5
Toluene			5	0.27	5
1,2,4-Trichlorobenzene			5	0.27	5
1,1,1-Trichloroethane			5	0.56	5

Reference Limits and Evaluation Table

Matrix:	Soil
Analytical Group:	VOCs
Concentration Level:	Low

Analyte	CAS Number	Project Action Limit[1] (µg/kg)	Project Quantitation Limit (µg/kg)	Achievable Laboratory Limits (µg/kg)	
				MDL	RL
1,1,2-Trichloroethane			5	0.39	5
Trichloroethene			5	0.42	5
Trichlorofluoromethane			5	0.34	5
1,1,2-Trichloro-1,2,2-trifluoroethane			5	1.3	5
Vinyl chloride			5	0.39	5
Xylenes (total)			10	0.67	10

MDL = Minimum detection limit
RL = Reporting limit
1 = Based on the MCLs, SMCLs and RBCs defined in the SOW

Reference Limits and Evaluation Table

Matrix:	Groundwater
Analytical Group:	SVOCs
Concentration Level:	Low

Analyte	CAS Number	Project Action Limit[1] (µg/l)	Project Quantitation Limit (µg/l)	Achievable Laboratory Limits (µg/l)	
				MDL	RL
Acenaphthene			10	0.1	10
Acenaphthylene			10	0.1	10
Acetophenone			10	0.34	10
Anthracene			10	0.1	10
Atrazine		3	10	0.34	10
Benzaldehyde			10	0.39	10
Benzo(a)anthracene			10	0.1	10
Benzo(b)fluoranthene			10	0.1	10
Benzo(k)fluoranthene			10	0.1	10
Benzo(ghi)perylene			10	0.1	10
Benzo(a)pyrene		0.2	10	0.1	10
1,1'-Biphenyl			10	0.8	10
bis(2-Chloroethoxy)methane			10	0.32	10
bis(2-Chloroethyl) ether			10	0.1	10
bis(2-Ethylhexyl) phthalate		6	10	0.8	10
4-Bromophenyl phenyl ether			10	0.8	10
Butyl benzyl phthalate			10	0.8	10
Caprolactam			10	0.8	10
Carbazole			10	0.28	10
4-Chloroaniline			10	0.8	10
4-Chloro-3-methylphenol			10	0.8	10
2-Chloronaphthalene			10	0.1	10
2-Chlorophenol			10	0.29	10

Reference Limits and Evaluation Table

Matrix:	Groundwater
Analytical Group:	SVOCs
Concentration Level:	Low

Analyte	CAS Number	Project Action Limit[1] (µg/l)	Project Quantitation Limit (µg/l)	Achievable Laboratory Limits (µg/l)	
				MDL	RL
4-Chlorophenyl phenyl ether			10	0.3	10
Chrysene			10	0.1	10
Dibenz(a,h)anthracene			10	0.1	10
Dibenzofuran			10	0.1	10
Di-n-butyl phthalate			10	0.67	10
3,3'-Dichlorobenzidine			50	0.37	50
2,4-Dichlorophenol			10	0.8	10
Diethyl phthalate			10	0.6	10
2,4-Dimethylphenol			10	0.8	10
Dimethyl phthalate			10	0.29	10
4,6-Dinitro-2-methylphenol			50	2.4	50
2,4-Dinitrophenol			50	2.4	50
2,4-Dinitrotoluene			10	0.27	10
2,6-Dinitrotoluene			10	0.8	10
Di-n-octyl phthalate			10	0.8	10
Fluoranthene			10	0.1	10
Fluorene			10	0.1	10
Hexachlorobenzene		1	10	0.1	10
Hexachlorobutadiene			10	0.27	10
Hexachlorocyclopentadiene		50	10	0.8	10
Hexachloroethane			10	0.8	10
Indeno(1,2,3-cd)pyrene			10	0.1	10
Isophorone			10	0.27	10
2-Methylnaphthalene			10	0.1	10

Reference Limits and Evaluation Table

Matrix:	Groundwater
Analytical Group:	SVOCs
Concentration Level:	Low

Analyte	CAS Number	Project Action Limit[1] (µg/l)	Project Quantitation Limit (µg/l)	Achievable Laboratory Limits (µg/l)	
				MDL	RL
2-Methylphenol			10	0.8	10
4-Methylphenol			10	0.8	10
Naphthalene			10	0.1	10
2-Nitroaniline			50	0.8	50
3-Nitroaniline			50	0.28	50
4-Nitroaniline			50	0.8	50
Nitrobenzene			10	0.04	10
2-Nitrophenol			10	0.28	10
4-Nitrophenol			50	2.4	50
N-Nitrosodiphenylamine			10	0.31	10
N-Nitrosodi-n-propylamine			10	0.8	10
2,2'-oxybis(1-Chloropropane)			10	0.4	10
Pentachlorophenol		1	10	2.4	10
Phenanthrene			10	0.1	10
Phenol			10	0.6	10
Pyrene			10	0.1	10
2,4,5-Trichlorophenol			10	0.3	10
2,4,6-Trichlorophenol			10	0.8	10

MDL = Minimum detection limit
RL = Reporting limit
1 = Based on the MCLs, SMCLs and RBCs defined in the SOW

Reference Limits and Evaluation Table

Matrix:	Soil
Analytical Group:	SVOCs
Concentration Level:	Low

Analyte	CAS Number	Project Action Limit[1] (µg/kg)	Project Quantitation Limit (µg/kg)	Achievable Laboratory Limits (µg/kg)	
				MDL	RL
Acenaphthene			330	1.3	330
Acenaphthylene			330	1.2	330
Acetophenone			66.6	9	66.6
Anthracene			330	1.3	330
Atrazine			330	21	330
Benzaldehyde			330	21	330
Benzo(a)anthracene		1800	330	0.95	330
Benzo(b)fluoranthene		1800	330	1.2	330
Benzo(k)fluoranthene		18100	330	1.7	330
Benzo(ghi)perylene			330	1.3	330
Benzo(a)pyrene		180	100	1.3	330
1,1'-Biphenyl			330	23	330
bis(2-Chloroethoxy)methane			330	22	330
bis(2-Chloroethyl) ether			330	2	330
bis(2-Ethylhexyl) phthalate		101000	330	18	330
4-Bromophenyl phenyl ether			330	21	330
Butyl benzyl phthalate			330	19	330
Caprolactam			330	37	330
Carbazole			330	19	330
4-Chloroaniline			330	17	330
4-Chloro-3-methylphenol			330	21	330
2-Chloronaphthalene			330	22	330
2-Chlorophenol			330	26	330

Reference Limits and Evaluation Table

Matrix:	Soil
Analytical Group:	SVOCs
Concentration Level:	Low

Analyte	CAS Number	Project Action Limit[1] (µg/kg)	Project Quantitation Limit (µg/kg)	Achievable Laboratory Limits (µg/kg)	
				MDL	RL
4-Chlorophenyl phenyl ether			330	24	330
Chrysene			330	0.9	330
Dibenz(a,h)anthracene		180	100	1.3	330
Dibenzofuran			330	20	330
Di-n-butyl phthalate			330	19	330
3,3'-Dichlorobenzidine			1600	18	1600
2,4-Dichlorophenol			330	20	330
Diethyl phthalate			330	19	330
2,4-Dimethylphenol			330	20	330
Dimethyl phthalate			330	21	330
4,6-Dinitro-2-methylphenol			1600	13	1600
2,4-Dinitrophenol			1600	83	1600
2,4-Dinitrotoluene			330	18	330
2,6-Dinitrotoluene			330	21	330
Di-n-octyl phthalate			330	18	330
Fluoranthene			330	1.2	330
Fluorene			330	1.2	330
Hexachlorobenzene			330	2.1	330
Hexachlorobutadiene			330	26	330
Hexachlorocyclopentadiene			1600	16	1600
Hexachloroethane			330	28	330
Indeno(1,2,3-cd)pyrene		1800	330	1.5	330
Isophorone			330	21	330
2-Methylnaphthalene			330	1.5	330

Reference Limits and Evaluation Table

Matrix:	Soil
Analytical Group:	SVOCs
Concentration Level:	Low

Analyte	CAS Number	Project Action Limit[1] (µg/kg)	Project Quantitation Limit (µg/kg)	Achievable Laboratory Limits (µg/kg)	
				MDL	RL
2-Methylphenol			330	28	330
4-Methylphenol			330	22	330
Naphthalene			330	1.6	330
2-Nitroaniline			1600	22	1600
3-Nitroaniline			1600	16	1600
4-Nitroaniline			1600	26	1600
Nitrobenzene			330	2.2	330
2-Nitrophenol			330	19	330
4-Nitrophenol			1600	110	1600
N-Nitrosodiphenylamine			330	21	330
N-Nitrosodi-n-propylamine			330	23	330
2,2'-oxybis(1-Chloropropane)			330	26	330
Pentachlorophenol			330	82	330
Phenanthrene			330	2	330
Phenol			330	25	330
Pyrene			330	1.1	330
2,4,5-Trichlorophenol			330	25	330
2,4,6-Trichlorophenol			330	21	330

MDL = Minimum detection limit
RL = Reporting limit
1 = Based on the MCLs, SMCLs and RBCs defined in the SOW

Reference Limits and Evaluation Table

Matrix:	Groundwater
Analytical Group:	Metals
Concentration Level:	Standard

Analyte	CAS Number	Project Action Limit[1] (µg/l)	Project Quantitation Limit (µg/l)	Achievable Laboratory Limits (µg/l)	
				MDL	RL
Aluminum		50	100	97	300
Antimony		6	5	1.8	60
Arsenic		50	10	3.2	10
Barium		2000	200	0.67	200
Beryllium		4	1	0.46	5
Cadmium		5	5	0.66	5
Calcium			5000	130	5000
Chromium		100	10	2.2	10
Cobalt			50	1.7	50
Copper		1300	25	4.5	25
Iron		300	250	81	250
Lead		15	6	1.9	6
Magnesium			5000	34	5000
Manganese		50	15	0.41	15
Nickel		100	40	3.2	40
Potassium			5000	72	5000
Selenium			15	4.1	15
Silver			10	2.2	10
Sodium			5000	590	5000
Thallium			15	4.7	15
Vanadium			50	0.64	50
Zinc			20	5	20
Mercury		2	0.4	0.12	0.4

MDL = Minimum detection limit

RL = Reporting limit

1 = Based on the MCLs, SMCLs and RBCs defined in the SOW

Reference Limits and Evaluation Table

Matrix:	Soil
Analytical Group:	Metals
Concentration Level:	Standard

Analyte	CAS Number	Project Action Limit[1] (mg/kg)	Project Quantitation Limit (mg/kg)	Achievable Laboratory Limits (mg/kg)	
				MDL	RL
Aluminum			30	9.6	30
Antimony		9	6	0.39	6
Arsenic		1.1	1	0.3	1
Barium			20	0.071	20
Beryllium			0.5	0.043	0.5
Cadmium		21	0.5	0.036	0.5
Calcium			500	16	500
Chromium		56	1	0.2	1
Cobalt			5	0.16	5
Copper		904	2.5	0.74	2.5
Iron		6718	15	4.9	15
Lead		400	0.6	0.19	0.6
Magnesium			500	5.1	500
Manganese		1748	1.5	0.074	1.5
Nickel		426	4	0.27	4
Potassium			500	6.2	500
Selenium			1.5	0.45	1.5
Silver			0.5	0.1	0.5
Sodium			500	66	500
Thallium		1.5	1	0.55	2
Vanadium			5	0.12	5
Zinc			3	1	3
Mercury			0.1	0.015	0.1

MDL = Minimum detection limit

RL = Reporting limit

1 = Based on the MCLs, SMCLs and RBCs defined in the SOW

Reference Limits and Evaluation Table

Matrix:	Groundwater
Analytical Group:	PCBs
Concentration Level:	Low

Analyte	CAS Number	Project Action Limit[1] (µg/l)	Project Quantitation Limit (µg/l)	Achievable Laboratory Limits (µg/l)	
				MDL	RL
PCB-1016		0.5	0.5	0.17	1
PCB-1221		0.5	0.5	0.13	1
PCB-1232		0.5	0.5	0.16	1
PCB-1242		0.5	0.5	0.22	1
PCB-1248		0.5	0.5	0.1	1
PCB-1254		0.5	0.5	0.16	1
PCB-1260		0.5	0.5	0.17	1

MDL = Minimum detection limit
RL = Reporting limit
1 = Based on the MCLs, SMCLs and RBCs defined in the SOW

Reference Limits and Evaluation Table

Matrix:	Soil
Analytical Group:	PCBs
Concentration Level:	Low

Analyte	CAS Number	Project Action Limit[1] (µg/kg)	Project Quantitation Limit (µg/kg)	Achievable Laboratory Limits (µg/kg)	
				MDL	RL
PCB-1016			65	21	65
PCB-1221			50	16	50
PCB-1232			45	14	45
PCB-1242		330	40	13	40
PCB-1248			55	17	55
PCB-1254		330	55	17	55
PCB-1260			55	17	55

MDL = Minimum detection limit
RL = Reporting limit
1 = Based on the MCLs, SMCLs and RBCs defined in the SOW

Reference Limits and Evaluation Table

Matrix: Aqueous
Analytical Group: VOCs
Concentration Level: Low

Analyte	CAS Number	Project Action Limit (µg/l)	Project Quantitation Limit (µg/l)	Analytical Method[1]		Achievable Laboratory Limits[2]	
				MDLs	Method QLs	MDLs	QLs
Benzene	71-43-2	5. (Note 3.)	5.			0.5	1.
2-Butanone	78-93-3	100	10			3.	5
Chlorobenzene	108-90-7	(Note 3.)	5.			0.8	1.
Chloroform	67-66-3	5. (Note 3.)	5.			0.8	1.
1,1-Dichloroethane	75-34-3	(Note 3.)	5.			1.	2.
1,2-Dichloroethane	107-06-2	5. (Note 3.)	5.			1.	2.
1,1-Dichloroethene	75-35-4	5. (Note 3.)	5.			0.8	1.
cis-1,2-Dichloroethene	156-59-2	(Note 3.)	5.			0.8	1.
trns-1,2-Dichloroethene	156-60-5	(Note 3.)	5.			0.8	1.
1,2-Dichloropropane	78-87-5	(Note 3.)	5.			1.	2.
Ethylbenzene	100-41-4	(Note 3.)	5.			0.8	1.
Methylene chloride	75-09-2	5. (Note 3.)	5.			2	3.
Tetrachloroethene	127-18-4	5. (Note 3.)	5.			0.8	1.
Toluene	108-88-3	(Note 3.)	5.			0.7	1.
1,1,1-Trichloroethane	71-55-6	200	5.			0.8	1.
Trichloroethene	79-01-6	5. (Note 3.)	5.			1.	2.

[1]Analytical MDLs and QLs are those documented in validated methods.
[2]Achievable MDLs and QLs are limits that an individual laboratory can achieve when performing a specific analytical method.
[3] Sum of these constituents must not exceed 50 µg/l.

Reference Limits and Evaluation Table

Matrix:Aqueous
Analytical Group: Metals/Conventionals
Concentration Level: Low

Analyte	CAS Number	Project Action Limit (µg/l)	Project Quantitation Limit (µg/l)	Analytical Method[1]		Achievable Laboratory Limits[2]	
				MDLs	Method QLs	MDLs	QLs
Biological Oxygen Demand	SRP 29	8-10					
Arsenic	7440-38-2	50	0.2			0.059	0..5
Chromium (total)	7440-47-3	Background	1.			0.071	0.5
Copper	7440-50-8	1,000	1.			0.023	0.5
Iron	7439-89-6	300	75			16	20
Lead	7439-92-1	50	1.			0.21	0.5
Manganese	7439-96-5	50	0.75			0.18	0.5
Mercury	7439-97-6	2	0.2			0.16	0.18
Zinc	7440-66-6	5,000	10			1.9	5
Chloride	16887-00-6	10,000	1,000				
Sulfate	14808-79-8	15,000	5,000				

[1]Analytical MDLs and QLs are those documented in validated methods.
[2]Achievable MDLs and QLs are limits that an individual laboratory can achieve when performing a specific analytical method.
[3] Sum of these constituents must not exceed 50 µg/l.

Project Schedule/Timeline Table

Activities	Organization	Anticipated Date(s) of Initiation	Anticipated Date of Completion	Deliverable	Deliverable Due Date
Liquid Level Monitoring	Brown and Caldwell	Fall of 2009	Spring of 2010	Summary table Remedial Design Report	As per the CD and SOW
Geotechnical Sampling	Brown and Caldwell	Fall of 2009	Spring of 2010	Summary table Remedial Design Report	As per the CD and SOW
Soil and Groundwater Sampling	Brown and Caldwell.	To be determined	To be determined	To be determined	To be determined

Sampling Design and Rationale

The objectives of the pre-design activities include the following:

1. To delineate the area(s) on top of the landfill where less than two feet of cover soil exists;
2. To evaluate the cover thickness on the central portion of the eastern flank of the landfill;
3. To establish the subsurface geotechnical properties along the perimeter/toe of the landfill.
4. To evaluate slope stability of the landfill;
5. To establish the limits of soil to be removed in the LNAPL-impacted area.

Sampling Locations and Methods/SOP Requirements Table

Sampling Location/ID Number	Matrix	Depth (feet)	Analytical Group	Concentration Level	Frequency	Sampling SOP Reference	Rationale for Sampling Location
FR-SB-44 through FR-SB-50	Soil	TBD	Moisture Content	NA	Per boring	ASTM D2116	Perimeter/toe of landfill
FR-SB-44 through FR-SB-50	Soil	TBD	Grain Size Distribution	NA	Per boring	ASTM D422	Perimeter/toe of landfill
FR-SB-44 through FR-SB-50	Soil	TBD	Atterberg Limits	NA	Per boring	ASTM 4318	Perimeter/toe of landfill
FR-SB-44 through FR-SB-50	Soil	TBD	Density	NA	Per boring	ASTM D2937	Perimeter/toe of landfill
FR-SB-44 through FR-SB-50	Soil	TBD	CU Triaxial with pore pressure (3)	NA	TBD	ASTM D4767	Perimeter/toe of landfill

TBD – To be determined based on lithology and discussion with Brown and Caldwell's Project Manager and/or Geotechnical Engineer.
NA – Not applicable

Analytical SOP Requirements Table

Matrix	Analytical Group	Analytical and Preparation Method / SOP Reference[1]	Container (number, size, and type)	Sample Volume (units)	Preservation Requirements (chemical, temperature, light protected)	Maximum Holding Time (preparation / analysis)
Groundwater	TCL VOCs	SW-846 5030B, 8260B / NC-MS-019	(3) 40 mL vials		pH <2 with HCl, Cool to 4°C	14 days
Groundwater	TCL SVOCs	SW-846 5030B, 8270C / NC-MS-018 / NC-OP-32	(2) 1 liter ambers		Cool to 4°C	7 days extract/ 40 days analysis
Groundwater	PCBs	SW-846 8082 / NC-GC-038	(2) 1 liter ambers		Cool to 4°C	7 days extract/ 40 days analysis
Groundwater	TAL Metals	SW-846 3010A, 6010B/7470A / NC-MT-012 / NC-MT-013 / NCIP011	1 liter plastic	500 mLs	Cool to 4°C, pH <2 with HNO_3	180 days; 28 days for Hg
Soil	TCL VOCs	SW-846 5030B, 8260B / NC-MS-019	Encores / Terracores / jars		Cool to 4°C	14 days
Soil	TCL SVOCs	SW-846 5030B, 8270C / NC-MS-018 / NC-OP-32	4 oz jar		Cool to 4°C	14 days to extract/ 40 days analysis
Soil	PCBs	SW-846 8082 / NC-GC-038	4 oz jar		Cool to 4°C	14 days to extract/ 40 days analysis
Soil	TAL Metals	SW-846 3010A, 6010B/7470A / NC-MT-011 / NC-MT-013 / NCIP010	4 oz jar		Cool to 4°C	180 days; 28 days for Hg

Analytical SOP Requirements Table

Matrix	Analytical Group[1]	Analytical and Preparation Method / SOP Reference[(1)]	Container (number, size, and type)	Sample Volume (units)	Preservation Requirements (chemical, temperature, light protected)	Maximum Holding Time (preparation / analysis)
Soil	Moisture content	ASTM D2116	Shelby Tube or 12-ounce jar	12 ounces	Cool, dry, upright	1 week
Soil	Grain size via sieve/hydrometer	ASTM D422	Shelby Tube		Cool	1 week
Soil	Atterberg limits	ASTM D4318	Shelby Tube or 12-ounce jar	12 ounces	Cool	1 week
Soil	Density	ASTM D2937	Shelby Tube		Cool	1 week
Soil	Consolidated, Undrained triaxial with pore pressure (3 tests)	ASTM D4767	Dedicated Shelby Tube		Cool	1 week

1 - Geotechnical samples

Field Quality Control Sample Summary Table

Matrix	Analytical Group	Analytical and Preparation Method / SOP Reference[1]	Container (number, size, and type)	Sample Volume (units)	Preservation Requirements (chemical, temperature, light protected)	Maximum Holding Time (preparation / analysis)	Matrix
Groundwater	TCL VOCs	SW-846 5030B, 8260B / NC-MS-019	(3) 40 mL vials		pH <2 with HCl, Cool to 4°C	14 days	Groundwater
Groundwater	TCL SVOCs	SW-846 5030B, 8270C / NC-MS-018 / NC-OP-32	(2) 1 liter ambers		Cool to 4°C	7 days extract/ 40 days analysis	Groundwater
Groundwater	PCBs	SW-846 8082 / NC-GC-038	(2) 1 liter ambers		Cool to 4°C	7 days extract/ 40 days analysis	Groundwater
Groundwater	TAL Metals	SW-846 3010A, 6010B/7470A / NC-MT-012 / NC-MT-013 / NCIP011	1 liter plastic	500 mLs	Cool to 4°C, pH <2 with HNO_3	180 days; 28 days for Hg	Groundwater
Soil	TCL VOCs	SW-846 5030B, 8260B / NC-MS-019	Encores / Terracores / jars		Cool to 4°C	14 days	Soil
Soil	TCL SVOCs	SW-846 5030B, 8270C / NC-MS-018 / NC-OP-32	4 oz jar		Cool to 4°C	14 days to extract/ 40 days analysis	Soil
Soil	PCBs	SW-846 8082 / NC-GC-038	4 oz jar		Cool to 4°C	14 days to extract/ 40 days analysis	Soil
Soil	TAL Metals	SW-846 3010A, 6010B/7470A / NC-MT-011 / NC-MT-013 / NCIP010	4 oz jar		Cool to 4°C	180 days; 28 days for Hg	Soil

Field Quality Control Sample Summary Table

Matrix	Analytical Group	Concentration Level	Analytical and Preparation SOP Reference	No. of Sampling Locations	No. of Field Duplicate Pairs (1)	No. of MS (1)	No. of Field Blanks (1)	No. of Equip. Blanks (1)	No. of Trip Blank Samples (1)	Total No. of Samples to Lab
Aqueous and non-aqueous environmental samples	VOCs, SVOCS, PCBs	Inclusive	TestAmerica SOP Nos. NCMS018, NCOP32, NCMS019, NCGC038	TBD	5% of environmental samples per matrix	5% of environmental samples per matrix	5% of environmental samples per matrix	5% of environmental samples per matrix	One per shipment with VOC samples	TBD
Aqueous and non-aqueous environmental samples	Metals	Inclusive	TestAmerica SOP Nos. NCMT012, NCMT013, NCMT002, NCMT011, NCIP011, NCIP010	TBD	5% of environmental samples per matrix	5% of environmental samples per matrix	5% of environmental samples per matrix	5% of environmental samples per matrix	5% of environmental samples per matrix	TBD
Solid	TCLP extraction	Inclusive	TestAmerica SOP No. NCOP033	TBD	NA	NA	NA	NA	NA	TBD

1. – Minimum of one sample per matrix per sample delivery group
TBD – To be determined
NA – Not applicable

Project Sampling SOP References Table

Reference Number	Title, Revision Date and/or Number	Originating Organization	Equipment Type	Modified for Project Work? (Y/N)	Comments
ASTM 1586	Standard Penetration Test (SPT) for split spoon sampling	ASTM	Split spoons	N	
ASTM 1587	Thin-walled Shelby tube sampling	ASTM	Shelby tubes	N	

Field Equipment Calibration, Maintenance, Testing, and Inspection Table

Field Equipment	Calibration Activity	Maintenance Activity	Testing Activity	Inspection Activity	Frequency	Acceptance Criteria	Corrective Action	Responsible Person	SOP Reference
Photo-ionization Detector	Internal and against known standard	As per Owner's Manual	As per Owner's Manual	As per Owner's Manual	Daily	As per Owner's Manual	As per Owner's Manual	Field Team	Owner's Manual
Multi-Gas Meter	Internal and against known standard	As per Owner's Manual	As per Owner's Manual	As per Owner's Manual	Daily	As per Owner's Manual	As per Owner's Manual	Field Team	Owner's Manual

Analytical SOP References Table

Lab SOP Number	Title, Revision Date, and / or Number	Definitive or Screening Data	Matrix and Analytical Group	Instrument	Organization Performing Analysis	Modified for Project Work?[1] (Y/N)
NC-MS-018	Revision 1, 12/16/2008 GC/MS Analysis based on Method 8270C	Definitive	Semi-Volatiles	GC/MS	TestAmerica	N
NC-OP-32	Revision 1.0, 01/07/2009 Extraction of Organic Compounds from Waters and Soils , based on SW846 3500 Series and 600 Series Methods	NA	Organic Prep	NA	TestAmerica	N
NC-OP-033	Revision 0, 03/31/2008 Toxicity Characteristic Leaching Procedure and Synthetic Precipitation Leaching Procedure	NA	TCLP extraction	NA	TestAmerica	N
NC-MS-019	Revision 10, 01/07/2009 Determination of Volatile Organics by GC/MS based on Methods 8260B and 8260A.	Definitive	Volatiles	GC/MS	TestAmerica	N
NC-MT-012	Revision 1, 01/07/2009 Inductively Coupled Plasma – Atomic Emission Spectroscopy, Spectrometric Method for Trace Element Analysis	Definitive	Metals	ICP	TestAmerica	N
NC-GC-038	Revision 1, 01/15/2009 Gas Chromatographic Analysis Based on Methods 8000B, 8021B, 8081A, 8082, 8151A, 615 and 8015B.	Definitive	Pests, Herbs, PCBs	GC	TestAmerica	N

Analytical SOP References Table

Lab SOP Number	Title, Revision Date, and / or Number	Definitive or Screening Data	Matrix and Analytical Group	Instrument	Organization Performing Analysis	Modified for Project Work?1 (Y/N)
NC-MT-013	Revision 0, 01/07/2009 Preparation and Analysis of Mercury in Aqueous Samples by Cold Vapor Atomic Absorption, SW846 7470A and MCAWW 245.1	Definitive	Mercury	CVAA	TestAmerica	N
NCMT002	Rev 4.5, 01/07/2009 Inductively Coupled Plasma – Mass Spectroscopy	Definitive	Metals	ICPMS	TestAmerica	No
NCMT011	Rev 1, 01/07/2009 Preparation and Analysis of Mercury in Solid Samples by Cold Vapor Atomic Absorption Spectroscopy	Definitive	Mercury	CVAA	TestAmerica	No
NCIP011	Rev 0, 01/07/2009 Acid Digestion for Aqueous Samples	Definitive	Metals Prep	NA	TestAmerica	No
NCIP010	Rev 1, 01/07/2009 Acid Digestion for Soil Samples	Definitive	Metals Prep	NA	TestAmerica	No

NA – Not applicable

Analytical SOP References Table

Lab SOP Number	Title, Revision Date, and / or Number	Definitive or Screening Data	Matrix and Analytical Group	Instrument	Organization Performing Analysis	Modified for Project Work?1 (Y/N)
ASTM D2116	2008	Definitive	Soil-Moisture	As per method	BBC&M	No
ASTM D422	2008	Definitive	Soil-Grain size	As per method	BBC&M	No
ASTM D4318	2008	Definitive	Soil-Atterberg limits	As per method	BBC&M	No
ASTM D2937	2008	Definitive	Soil-Density	As per method	BBC&M	No
ASTM D4767	2008	Definitive	Soil-Triaxial	As per method	BBC&M	No

Analytical Instrument Calibration Table

Instrument	Calibration Procedure	Frequency of Calibration	Acceptance Criteria	Corrective Action (CA)	Person Responsible for CA	SOP Reference
GC/MS	Check of mass spectral ion intensities (tuning procedure) using BFB (8260B) and DFTPP (8270C)	Prior to initial calibration and calibration verification (every 12 hours)	Must meet the method requirements before samples are analyzed.	Retune instrument and verify the tune acceptability	QA Manager/Group Leader/Analyst	NC-MS-018, NC-MS-019
	Minimum five-point initial calibration for target analytes, lowest concentration standard at or near the reporting limit	Initial calibration prior to sample analysis	8260B: The minimum average SPCC RF for Chloromethane, 1,1-Dichloroethane, Bromoform is 0.1; for Chlorobenzene and 1,1,2,2-Tetrachloroethane is 0.3 8270C: The minimum average SPCC RF is 0.050. 8260B and 8270C: RSD is less than or equal to 15% or R2 > 0.99 for target analytes, and is less than or equal to 30% for CCC	Correct problem, then repeat initial calibration	QA Manager/Group Leader/Analyst [b]	NC-MS-018, NC-MS-019
	Second-source calibration verification	Once per five-point initial calibration	Less than 20% for CCC compounds, less than or equal to 50% for non-CCC compounds. Allowance for 6 compounds above 50%	Correct problem, then repeat second source verification. If it still fails, then repeat initial calibration	QA Manager/Group Leader/Analyst [b]	NC-MS-018, NC-MS-019

Analytical Instrument Calibration Table

Instrument	Calibration Procedure	Frequency of Calibration	Acceptance Criteria	Corrective Action (CA)	Person Responsible for CA	SOP Reference
GC/MS	Daily calibration verification	Before sample analysis and at beginning of every 12 hours of analysis time .	8260B: The minimum average SPCC RF for Chloromethane, 1,1-Dichloroethane, Bromoform is 0.1; for Chlorobenzene and 1,1,2,2-Tetrachloroethane is 0.3 8270C: The minimum average SPCC RF is 0.050. 8260B and 8270C[a]: The percent drift/difference for RF is less than or equal to 20% for CCC analytes and Gasoline.	Correct problem, then repeat CCV. If still fails, repeat initial calibration	QA Manager/Group Leader/Analyst [b]	NC-MS-018, NC-MS-019
Metals (ICP)	Internal standards	During acquisition of calibration standard	Areas within -50% to +100% of last ICAL mid-point for each CCV	Inspect mass spectrometer and GC for malfunctions; mandatory reanalysis of samples analyzed while system was malfunctioning	Lab Manager / Analyst [b]	NC-MS-018, NC-MS-019

Analytical Instrument Calibration Table

Instrument	Calibration Procedure	Frequency of Calibration	Acceptance Criteria	Corrective Action (CA)	Person Responsible for CA	SOP Reference
Metals (ICP)	Initial calibration per manufacturer's instructions, with a minimum of one standard and a calibration blank	Initial calibration prior to sample analysis	Accepted if the initial calibration verification (ICV) passes	Correct problem, then repeat initial calibration .	Group Leader / Analyst	NC-MT-012
	Low concentration standard at or near the reporting limit	After one point calibration	Advisory limits of +/-50	Evaluate run based on advisory limits.	Group Leader / Analyst	NC-MT-012
	Second-source (ICV) calibration verification	Once per initial calibration	Within 10%	Correct problem, then repeat. If still fails, repeat initial calibration	Group Leader / Analyst	NC-MT-012
Metals ICPMS	Continuing calibration verification (CCV)	After every 10 samples and the end of the sequence .	Within 10%	Correct problem, then repeat. If still fails, repeat initial calibration. If CCV is biased high and associated samples are below the RL the data can be reported	Group Leader / Analyst	NC-MT-012
	Initial calibration per manufacturer's instructions, with a minimum of one standard and a calibration blank	Initial calibration prior to sample analysis	Correlation coefficient >0.995 (if more than one point); accepted if the initial calibration verification (ICV) passes	Correct problem, then repeat initial calibration	Group Leader / Analyst	NC-MT-002
	Second-source (ICV) calibration verification	Once per initial calibration	Within 10%	Correct problem, then repeat. If still fails, repeat initial calibration	Group Leader / Analyst	NC-MT-002

Analytical Instrument Calibration Table

Instrument	Calibration Procedure	Frequency of Calibration	Acceptance Criteria	Corrective Action (CA)	Person Responsible for CA	SOP Reference
Metals ICPMS	Continuing calibration verification (CCV)	After every 10 samples and the end of the sequence .	Within 10%	Correct problem, then repeat. If still fails, repeat initial calibration If CCV is biased high and associated samples are below the RL the data can be reported.	Group Leader / Analyst	NC-MT-012
Metals (CVAA)	Initial calibration (IC) per manufacturer's instructions, with a minimum of five standards and a calibration blank	Initial calibration prior to sample analysis	Correlation coefficient >0.995; accepted if the initial calibration verification (ICV) passes	Correct problem, then repeat initial calibration	Group Leader / Analyst	NC-MT-011 NC-MT-013
	Second-source ICV, prepared at the calibration midpoint	Once per initial calibration	Within 10%	Correct problem, then repeat. If still fails, repeat initial calibration	Group Leader / Analyst	NC-MT-011 NC-MT-013
PCBs (GC)	Minimum five-point initial calibration for target analytes, lowest concentration standard at or near the reporting limit	Initial calibration prior to sample analysis	A minimum of 5 points for % RSD. Must pass <20%. Quadratic requires 6 points passing by a minimum Coefficient of 0.990 Linear must pass by a coefficient of,0.990.	Correct problem, then repeat initial calibration	QA Manager/Group Leader/Analyst [b]	NC-GC-038
PCBs (GC)	Second-source calibration verification	Once per five-point initial calibration	ICV Must pass <15% for TCL compounds. Non TCL compounds must pass by ,30%	Correct problem, then repeat second source verification. If it still fails, then repeat initial calibration	QA Manager/Group Leader/Analyst [b]	NC-GC-038

Analytical Instrument and Equipment Maintenance, Testing, and Inspection Table

Instrument / Equipment	Maintenance Activity	Testing Activity	Inspection Activity	Frequency	Acceptance Criteria	Corrective Action	Responsible Person[2]	SOP Reference
GC	Change septum, clean injection port, change or clip column, install new liner	Detector signals and chromatogram review	Instrument performance and sensitivity	As needed	CCV passes criteria	Reinspect injector port, cut additional column, reanalyze CCV, recalibrate instrument	Test America Chemist	NC-GC-038
GC-MS	Clean sources, maintain vacuum pumps	Tuning	Instrument performance and sensitivity	Service vacuum pumps twice per year, other maintenance as needed	Tune and CCV pass criteria	Recalibrate instrument	Test America Chemist	NC-MS-018, NC-MS-019
GC-MS	Change septum, clean injection port, change or clip column, install new liner, change trap	Response factors and chromatogram review	Instrument performance and sensitivity	As needed	Tune and CCV pass criteria	Reinspect injector port, cut additional column, reanalyze CCV, recalibrate instrument	Test America Chemist	NC-MS-018, NC-MS-019
ICP	Replace disposables, flush lines, clean injector and torch	Intensity of 1PPM Manganese STD within criteria	Check connections	Daily or as needed	Intensity of 1PPM Manganese STD within criteria	Replace, investigate injector, reanalyze	Test America Chemist	NC-MT-002
ICP	Replace pump windings	Monitor ISTD counts for variation	Instrument performance and sensitivity	As needed	Monitor ISTD counts for variation	Replace windings, recalibrate and reanalyze	Test America Chemist	NC-MT-002
CVAA	Replace disposables, flush lines	Sensitivity check	Instrument performance and sensitivity	Daily or as needed	CCV pass criteria	Recalibrate	Test America Chemist	NC-MT-013
ICPMS	Change tubing	Monitor Indium intensity counts	Instrument performance and	As needed	Pass performance report	Replace tubing, perform	Test America Chemist	NC-MT-002

Analytical Instrument and Equipment Maintenance, Testing, and Inspection Table

Instrument / Equipment	Maintenance Activity	Testing Activity	Inspection Activity	Frequency	Acceptance Criteria	Corrective Action	Responsible Person[2]	SOP Reference
			sensitivity			performance report		
ICPMS	Clean cones	Monitor Indium intensity counts	Instrument performance and sensitivity	As needed	Pass performance report	Clean, replace perform performance report	Test America Chemist	NC-MT-002

Sample Handling System

SAMPLE COLLECTION, PACKAGING, AND SHIPMENT
Sample Collection (Personnel/Organization): Lead Field Geologist/BC Support Field Staff, Brown and Caldwell
Sample Packaging (Personnel/Organization): Lead Field Geologist/BC Support Field Staff, Brown and Caldwell
Coordination of Shipment (Personnel/Organization): Lead Field Geologist/BC Support Field Staff, Brown and Caldwell
Type of Shipment/Carrier: Hand delivery, laboratory courier and/or FedEx
SAMPLE RECEIPT AND ANALYSIS
Sample Receipt (Personnel/Organization): Receiving counter of geotechnical and analytical laboratories as per their QA Manual
Sample Custody and Storage (Personnel/Organization): Geotechnical and analytical laboratories as per their QA Manual
Sample Preparation (Personnel/Organization): Geotechnical and analytical laboratories as per their QA Manual and test method SOP/ASTM standard
Sample Determinative Analysis (Personnel/Organization): Geotechnical and analytical laboratories as per their QA Manual and test method SOP/ASTM std.
SAMPLE ARCHIVING
Field Sample Storage (No. of days from sample collection): See Attachment B-2, Section 5.0
Sample Extract/Digest Storage (No. of days from extraction/digestion): Analytical laboratory as per their QA Manual and method SOP
Biological Sample Storage (No. of days from sample collection): Analytical laboratory as per their QA Manual and method SOP
SAMPLE DISPOSAL
Personnel/Organization: Geotechnical and analytical laboratories as per their QA Manual and method SOP
Number of Days from Analysis: Geotechnical and analytical laboratories as per their QA Manual and method SOP

Sample Custody Requirements

Field Sample Custody Procedures (sample collection, packaging, shipment, and delivery to laboratory):

Each environmental sample will be properly identified and individually labeled. Labels will be filled out in indelible ink with at least the following information: BC sample identification, date and time of sample collection, initials of sampler(s), analysis/test required, and preservation (as appropriate). The sample label will be securely attached to the sample container.

Environmental samples being analyzed by the analytical laboratory will be properly packaged and shipped for analysis. Following labeling, the sample bottles will be sealed with custody seals, and enclosed in clear sealable plastic bags (e.g., Ziploc® bags), through which the identifying label is visible.

The sample containers, now sealed in bags, will then be placed in a hard plastic cooler, an effort will be made to fill in voids with either ice or packaging material (e.g. bubble wrap). Samples are to be packed with sufficient ice (enclosed in double-bagged sealable plastic bags) to cool the samples to 4±2°C. Additionally, each iced cooler will be packed with a cooler temperature blank. Lastly, the cooler should be filled with adequate cushioning material to minimize the possibility of container breakage.

Laboratory Sample Custody Procedures (receipt of samples, archiving, disposal):

Laboratory custody procedures are described in the attached analytical and geotechnical laboratory QA Manuals in Attachments B and C, respectively.

Sample Identification Procedures:

The method of identification of a sample depends on the type of measurement or analysis performed. When field screening measurements (e.g., pH, dissolved oxygen, or turbidity) are made, data are recorded directly in logbooks or on field investigation forms. Identifying information such as project name, station number, station location, date and time, name of sampler, field observations, remarks, or other pertinent information will be recorded.

Samples collected for laboratory analysis during the field investigation will be specifically designated by BC personnel for unique identification. Each sample will be designated by an alpha-numeric code which will identify the sampling location, type or as necessary depth.

Sample Custody Requirements

The three codes that make up the sample identifier are described as follows:

1. The Site name – FR (Ford Road);
2. The medium/sample type codes are listed below:

   MW - Groundwater sample taken from a monitoring well;
   SW – Surface water sample;
   SP – Seep sample;
   SED – Sediment sample;
   S – Soil sample;
   DW – Drummed waste sample;
   W – Waste sample;
   SB – Soil boring sample;
   TB – Trip Blank;
   FB – Field Blank sample;
   MS/MSD – Matrix spike/matrix spike duplicate sample;
   DUP – Duplicate sample; and

3. The location code will be keyed to the specific sample designation.

The following is an example of a sample identifier that will be used for samples collected for geotechnical laboratory analysis:

FR-SB-48B-10-12: indicating that the soil sample was collected from the second boring at soil boring location FR-SB-48 from a depth of 10 to 12 feet below ground surface.

Sample Custody Requirements

Chain-of-custody Procedures:

A completed COC form must be included with all sample transfers/shipments.

Geotechnical samples will be hand-delivered to BBC&M in Cleveland, Ohio by BC personnel. Prior to delivery, the samples will be stored in a secure location. Filled Shelby tubes will be stored oriented properly with the "up" arrow pointed up.

When analytical samples are being shipped by an overnight delivery service to the laboratory, the COC form and any other paperwork will be checked against the sample labels and field documentation, and then placed in a waterproof sealable plastic bag and taped securely to the inside lid of the cooler. The cooler must then be secured, with custody seals affixed over the lid opening in at least two locations, and the cooler wrapped with strapping tape (without obscuring the custody seals). Orientation "this end up" arrows will be drawn or attached on two sides of the cooler, and a completed overnight delivery service shipping label will be attached to the top or handle of the cooler. Wide, clear tape should be used to secure the label to the lid of the cooler to prevent the shipping address label from being accidentally peeled off the cooler top.

Samples to be shipped by an overnight delivery service will be shipped within 24 hours of sample collection and arrive at the laboratory within 24 hours of sample shipment. A member of the field team will contact the laboratory directly, to notify them of a sample shipment, and again the next day to confirm receipt. In addition, an electronic version of the COCs will be sent to the laboratory either electronically or by facsimile.

If the laboratory is going to courier the samples directly from the site or the samples are being delivered directly to the laboratory by BC, the COC form will not be placed inside the cooler. The COC form must be signed by the receiver (e.g., the laboratory courier, or the laboratory sample custodian) when he/she accepts possession of the samples.

QC Samples Table

Matrix	Water/Soil
Analytical Group	GC semi-volatiles
Analytical Method / SOP Reference	EPA 8082

QC Sample	Frequency/ Number	Method/SOP QC Acceptance Limits	Corrective Action	Person(s) Responsible for Corrective Action	Data Quality Indicator (DQI)	Measurement Performance Criteria
Method Blank	1/Batch (20 samples)	No Target Compounds>1/2RL; no common lab contaminants >RL.	If sufficient sample is available, reanalyze samples. Qualify data as needed. Report results if sample results >20x blank result or sample results ND.	Analyst / Section Supervisor	Accuracy/Bias-Contamination	No Target Compounds>1/2RL; no common lab contaminants >RL.
Instrument Blank	Not required for PCB analysis	.				
Laboratory Control Sample	LCS if prepping an MS/MSD LCS/LCSD if no MS/MSD	Refer to Attachment 1 for LCS control limits.	If sufficient sample is available, reanalyze samples. Qualify data as needed.	Analyst / Section Supervisor	Accuracy/Bias	Laboratory % Recovery Control Limits
Matrix Spike/Matrix Spike Duplicate	1/Batch (20 samples)	Refer to Attachment 1 for MS control limits.	Determine root cause; flag MS/MSD data; discuss in narrative.	Analyst / Section Supervisor	Accuracy/Bias/ Precision	Laboratory % Recovery / RPD Control Limits
Surrogates	Every sample	Refer to Attachment 1 for surrogate control limits.	Check calculations and instrument performance; recalculate, reanalyze.	Analyst / Section Supervisor	Accuracy/Bias	Laboratory % Recovery Control Limits

QC Samples Table

Matrix	Water/Soil
Analytical Group	GC Semi
Analytical Method / SOP Reference	8081/8151

QC Sample	Frequency/ Number	Method/SOP QC Acceptance Limits	Corrective Action	Person(s) Responsible for Corrective Action	Data Quality Indicator (DQI)	Measurement Performance Criteria
Method Blank	1/Batch (20 samples)	No Target Compounds>RL; no common lab contaminants >RL.	If sufficient sample is available, reanalyze samples. Qualify data as needed. Report results if sample results >20x blank result or sample results ND.	Analyst / Section Supervisor	Accuracy/Bias-Contamination	No Target Compounds>RL; no common lab contaminants >RL.
Laboratory Control Sample	1/Batch (20 samples) LCSD required if no MS/MSD	Refer to Attachment 1 for LCS control limits.	If sufficient sample is available, reanalyze samples. Qualify data as needed.	Analyst / Section Supervisor	Accuracy/Bias	Laboratory % Recovery Control Limits
Matrix Spike/Matrix Spike Duplicate	1/Batch (20 samples)	Refer to Attachment 1 for MS control limits.	Determine root cause; flag MS/MSD data; discuss in narrative.	Analyst / Section Supervisor	Accuracy/Bias/ Precision	Laboratory % Recovery / RPD Control Limits
Surrogates	Every sample	Refer to Attachment 1 for surrogate control limits.	Check calculations and instrument performance; recalculate, reanalyze.	Analyst / Section Supervisor	Accuracy/Bias	Laboratory % Recovery Control Limits

QC Samples Table

Matrix	Water/Soil
Analytical Group	ICP Metals
Analytical Method / SOP Reference	EPA 6010 / NC-MT-012

QC Sample	Frequency/ Number	Method/SOP QC Acceptance Limits	Corrective Action	Person(s) Responsible for Corrective Action	Data Quality Indicator (DQI)	Measurement Performance Criteria
Calibration blank (CCB)	After CCV, after every 10 samples, and at the end of the sequence	No target analytes > RL If CCB is biased high and associated samples are below the RL the data can be reported. .	Correct the problem and reanalyze the blank and previous samples associated with CCB	Group Leader / Analyst	Accuarcy	No target analytes > 2x MDL
MDL study	After initial setup and and once per 12-months; otherwise quarterly MDL verification checks shall be performed.	MDLs will be below the RLs	.	Group Leader / Analyst	Sensitivity	MDLs will be below the RLs
Method blank	One per digestion batch	No target analytes > RL For common laboratory contaminants, no analytes >2x RL.. If MB is biased high and associated samples are below the RL or 20X the blank the data is accepted.	Re-analyze. Correct problem, then re-prepare and reanalyze the method blank and all samples processed with the contaminated blank	Group Leader / Analyst	Accuracy/Bias Contamination	No target analytes > ½ RL
Interference check solution (ICS)	At the beginning of an analytical run	**ICSA:** For non-interfering elements with RL's less than 10 , must fall withing 2x the RL from zero. For RL's >10 must fall within 1x RL from zero. If not evaluate run based on lab SOP	Terminate analysis, correct problem, then reanalyze ICS and all affected samples	Group Leader / Analyst	Accuracy	Within ±20% of expected value

QC Samples Table

Matrix	Water/Soil

		ICSAB Within ±20% of expected value.expected value.				
MS	One MS per preparation batch	QC acceptance criteria: 80% to 120% accuracy, 20% precision; or laboratory statistically derived control limits	Flag data with N	Group Leader / Analyst	Accuracy	QC acceptance criteria: 80% to 120% accuracy, 20% precision or laboratory statistically derived control limits
MSD or sample duplicate	One per preparation batch	RPD < or equal to 20%	Flag data with N	Group Leader / Analyst	Precision	RPD < or equal to 20%
LCS	One LCS per each preparation batch	Laboratory statistically derived control limits : 80% to 120% accuracy. Or in house limits If the LCS is biased high and the associated samples are ND the data can be reported.,	Terminate analysis, identify and correct the problem, then re-prepare and reanalyze all affected samples and QC	Group Leader / Analyst	Accuracy	QC acceptance criteria: 80% to 120% accuracy, 20% precision or laboratory statistically derived control limits
Dilution test	Each preparation batch or when a new sample matrix is incountered.	1:5 dilution must agree within ±10% of the original determination	Flag date with an E	Group Leader / Analyst	Accuracy	10% Difference

QC Samples Table

Matrix	Water / Soil
Analytical Group	Semi Volatile Organics
Analytical Method / SOP Reference	EPA 8270C/ NC-MS-018,

QC Sample	Frequency/ Number	Method/SOP QC Acceptance Limits	Corrective Action	Person(s) Responsible for Corrective Action	Data Quality Indicator (DQI)	Measurement Performance Criteria
Method Blank	1/Batch (20 samples)	No Target Compounds>1/2RL ; no common lab contaminants >RL.	If sufficient sample is available, reanalyze samples. Qualify data as needed. Report results if sample results >20x blank result or sample results ND.	Analyst / Section Supervisor	Accuracy/Bias-Contamination	No Target Compounds>1/2RL; no common lab contaminants >RL.
Laboratory Control Sample	1/Batch(20samples)_ LCSD if no MS/MSD	Refer to Attachment 1 for LCS control limits.	If sufficient sample is available, reanalyze samples. Qualify data as needed.	Analyst / Section Supervisor	Accuracy/Bias	Laboratory % Recovery Control Limits
Matrix Spike/Matrix Spike Duplicate	1/Batch (20 samples)	Refer to Attachment 1 for MS control limits.	Determine root cause; flag MS/MSD data; discuss in narrative.	Analyst / Section Supervisor	Accuracy/Bias/ Precision	Laboratory % Recovery / RPD Control Limits
Surrogates	Every sample	Refer to Attachment 1 for surrogate control limits.	Check calculations and instrument performance; recalculate, reanalyze.	Analyst / Section Supervisor	Accuracy/Bias	Laboratory % Recovery Control Limits

QC Samples Table

Matrix	Water/Soil
Analytical Group	Volatile Organics
Analytical Method / SOP Reference	EPA 8260B/ NC-MS-019, Rev 10

QC Sample	Frequency/ Number	Method/SOP QC Acceptance Limits	Corrective Action	Person(s) Responsible for Corrective Action	Data Quality Indicator (DQI)	Measurement Performance Criteria
Method Blank	1/Batch (20 samples)	No Target Compounds>RL; no common lab contaminants >5XRL.	If sufficient sample is available, reanalyze samples. Qualify data as needed. Report results if sample results >20x blank result or sample results ND.	Analyst / Section Supervisor	Accuracy/Bias-Contamination	No Target Compounds>1/2RL; no common lab contaminants >RL.
Instrument Blank	Once per 12 hours if method blank is not run	No Target Compounds>RL; no common lab contaminants >5XRL.	If sufficient sample is available, reanalyze samples. Qualify data as needed. Report results if sample results >20x blank result or sample results ND.	Analyst / Section Supervisor	Accuracy/Bias-Contamination	No Target Compounds>1/2RL; no common lab contaminants >RL.
Laboratory Control Sample	1/Batch (20 samples)	Refer to Attachment 1 for LCS control limits.	If sufficient sample is available, reanalyze samples. Qualify data as needed.	Analyst / Section Supervisor	Accuracy/Bias	Laboratory % Recovery Control Limits
Matrix Spike/Matrix Spike Duplicate	1/Batch (20 samples)	Refer to Attachment 1 for MS control limits.	Determine root cause; flag MS/MSD data; discuss in narrative.	Analyst / Section Supervisor	Accuracy/Bias/ Precision	Laboratory % Recovery / RPD Control Limits
Surrogates	Every sample	Refer to Attachment 1 for surrogate control limits.	Check calculations and instrument performance; recalculate, reanalyze.	Analyst / Section Supervisor	Accuracy/Bias	Laboratory % Recovery Control Limits

Project Documents and Records Table

Sample Collection Documents and Records	On-site Analysis Documents and Records	Off-site Analysis Documents and Records	Data Assessment Documents and Records	Other
• Field logbooks • COC forms • Field sample forms	• COC forms • Logbooks (instrument calibration, trouble-shooting, sample log-in) • Field sample forms	• Sample receipt logs • Internal and external COC forms • Equipment maintenance logs • Corrective action documentation	• Field inspection checklist(s) • Data review documentation • Review forms for electronic entry of data into database • Corrective action documentation	• Preliminary Design Report • Final Design Report

Analytical Services Table

Matrix	Analytical Group	Sample Locations/ID Number	Analytical Method	Data Package Turnaround Time	Laboratory / Organization (name and address, contact person and telephone number)	Backup Laboratory / Organization (name and address, contact person and telephone number)
Water / Soil	VOCs	Ford Rd Landfill	8260B	14 Calendar days	TestAmerica North Canton, 4101 Shuffel Street, NW, North Canton, Ohio 44720 Contact: Deborah Dunn Phone: (330) 966 9292	NA
Water / Soil	Metals	Ford Rd Landfill	6010B / 6020 / 7470 / 7471	14 Calendar days	TestAmerica North Canton, 4101 Shuffel Street, NW, North Canton, Ohio 44720 Contact: Deborah Dunn Phone: (330) 966 9292	NA
Water / Soil	PCBs	Ford Rd Landfill	PCB	14 Calendar Days	TestAmerica North Canton, 4101 Shuffel Street, NW, North Canton, Ohio 44720 Contact: Deborah Dunn Phone: (330) 966 9292	NA
Water / Soil	SVOCs	Ford Rd Landfill	8270C	14 Calendar Days	TestAmerica North Canton, 4101 Shuffel Street, NW, North Canton, Ohio 44720 Contact: Deborah Dunn Phone: (330) 966 9292	NA

NA – Not applicable

Analytical Services Table

Matrix	Analytical Group	Sample Locations/ID Number	Analytical Method	Data Package Turnaround Time	Laboratory / Organization (name and address, contact person and telephone number)	Backup Laboratory / Organization (name and address, contact person and telephone number)
Soil	Geotechnical -Moisture content	Ford Rd Landfill	ASTM D2116	21 Calendar days	BBC&M 8555 Sweet Valley Drive, Suite S Valley View, OH 44125 Contact: Brian Shields Phone: (216) 901-9996	NA
Soil	Geotechnical -Grain size	Ford Rd Landfill	ASTM D422	21 Calendar days	BBC&M 8555 Sweet Valley Drive, Suite S Valley View, OH 44125 Contact: Brian Shields Phone: (216) 901-9996	NA
Soil	Geotechnical -Atterberg limits	Ford Rd Landfill	ASTM D4318	21 Calendar Days	BBC&M 8555 Sweet Valley Drive, Suite S Valley View, OH 44125 Contact: Brian Shields Phone: (216) 901-9996	NA
Soil	Geotechnical -Density		ASTM D2937	21 Calendar Days	BBC&M 8555 Sweet Valley Drive, Suite S Valley View, OH 44125 Contact: Brian Shields Phone: (216) 901-9996	NA

Analytical Services Table

Matrix	Analytical Group	Sample Locations/ID Number	Analytical Method	Data Package Turnaround Time	Laboratory / Organization (name and address, contact person and telephone number)	Backup Laboratory / Organization (name and address, contact person and telephone number)
Soil	Geotechnical -Triaxial	Ford Rd Landfill	ASTM D4767	21 Calendar Days	BBC&M 8555 Sweet Valley Drive, Suite S Valley View, OH 44125 Contact: Brian Shields Phone: (216) 901-9996	NA

NA – Not applicable

Planned Project Assessments Table

Assessment Type	Frequency	Internal or External	Organization Performing Assessment	Person(s) Responsible for Performing Assessment (Title and Organizational Affiliation)	Person(s) Responsible for Responding to Assessment Findings (Title and Organizational Affiliation)	Person(s) Responsible for Identifying and Implementing Corrective Actions (CA) (Title and Organizational Affiliation)	Person(s) Responsible for Monitoring Effectiveness of CA (Title and Organizational Affiliation)
Data review	Upon Receipt of all data	Internal	TestAmerica	Dorothy Leeson, QA Manager for TestAmerica	Senior Chemist for affected laboratory procedure - TestAmerica	Opal Davis-Johnson, Laboratory Manager, TestAmerica	Dorothy Leeson, QA Manager, TestAmerica
Data review	Upon Receipt of all data	Internal	BBC&M	Brian Shields, Project Engineer and QA Officer	Senior analyst for affected laboratory test- BBC&M	Brian Shields, Project Engineer and QA Officer	Brian Shields, Project Engineer and QA Officer
Data review	Quarterly	External	BC	Andrew McCorkle, Quality Assurance Officer, BC	James Peeples, Project Manager, BC	Michael Watkins, BC	Michael Watkins, BC

Assessment Findings and Corrective Action Responses

Assessment Type	Nature of Deficiencies Documentation	Individual(s) Notified of Findings (Name, Title, Organization)	Timeframe of Notification	Nature of Corrective Action Response Documentation	Individual(s) Receiving Corrective Action Response (Name, Title, Org.)	Timeframe for Response
Review field records	Sample collection methods will yield unusable result	Patrick Steerman (SEMC), Ford Road PRP Group, Demaree Colleir (USEPA RPM)	14 days after finding	In writing via e-mail	Patrick Steerman (SEMC), Ford Road PRP Group, Demaree Colleir (USEPA RPM)	As indicated in CA response
Review field records	Scheduled sample not collected	Patrick Steerman (SEMC), Ford Road PRP Group, Demaree Colleir (USEPA RPM)	14 days after finding	In writing via e-mail	Patrick Steerman (SEMC), Ford Road PRP Group, Demaree Colleir (USEPA RPM)	As indicated in CA response
Qualitative laboratory data review	Inappropriate analytical/testing methods yield unusable result	Patrick Steerman (SEMC), Ford Road PRP Group, Demaree Colleir (USEPA RPM)	14 days after finding	In writing via e-mail	Patrick Steerman (SEMC), Ford Road PRP Group, Demaree Colleir (USEPA RPM)	As indicated in CA response

QA Management Reports Table

Type of Report	Frequency (daily, weekly monthly, quarterly, annually, etc.)	Projected Delivery Date(s)	Person(s) Responsible for Report Preparation (Title and Organizational Affiliation)	Report Recipient(s) (Title and Organizational Affiliation)
Preliminary Remedial Design	Draft and Final	As per the CD and SOW	James Peeples, BC	Demaree Collier (USEPA Vanessa Steigerwald Dick (OEPA) Patrick Steerman (SEMC) Ford Road PRP Group
Final Remedial Design	Draft and Final	As per the CD and SOW	James Peeples, BC	Demaree Collier (USEPA Vanessa Steigerwald Dick (OEPA) Patrick Steerman (SEMC) Ford Road PRP Group

Verification (Step I) Process Table

Verification Input	Description	Internal/ External	Responsible for Verification (Name, Organization)
Field logbook entries	Field notes will be reviewed for completeness.	I	Michael Watkins, BC
Chains-of-custody	COC forms will be reviewed for completeness.	I	Michael Watkins, BC
Laboratory analytical/testing data package	Data packages will be reviewed for completeness.	I	Michael Watkins, BC
Laboratory QA/QC data package	Data packages will be reviewed for completeness.	I	Michael Watkins, BC
Database	Database will be reviewed for completeness and technical accuracy.	I	Michael Watkins, BC

Sampling and Analysis Validation (Steps IIa and IIb) Process Table

Step IIa/IIb	Validation Input	Description	Responsible for Validation (Name, Organization)
IIa	SOPs	Verify that sampling methods/procedures were followed, and that deviations were noted/approved.	Michael Watkins, BC
IIb	SOPs	Determine potential impacts from noted/approved deviations, in regard to PQOs.	Michael Watkins, BC
IIa	Chains of custody	Examine COC forms against QAPP and laboratory contract requirements (e.g., analytical methods, sample identification, etc.).	Michael Watkins, BC
IIa	Laboratory data package	Examine packages against QAPP and laboratory contract requirements, and against COC forms (e.g., holding times, sample handling, analytical methods, sample identification, data qualifiers, QC samples, etc.).	Michael Watkins, BC
IIb	Laboratory data package	Determine potential impacts from noted/approved deviations, in regard to PQOs. Examples include PQLs and QC sample limits (precision/accuracy).	Michael Watkins, BC
IIb	Field and lab duplicates	Compare results of field duplicate (or replicate) analyses with RPD criteria.	Michael Watkins, BC

Step IIa – Compliance with methods, procedures, and contracts
Step IIb – Compliance with QAPP quality objectives

Sampling and Analysis Validation (Steps IIa and IIb) Summary Table

Step IIa/IIb	Matrix	Analytical Group	Concentration Level	Validation Criteria	Data Validator (title and organizational affiliation)
IIa / IIb	Inclusive	Inclusive	Inclusive	Qualitative data review according to Worksheets No. 11, 12, 19, 28 (refer to QAPP Section 7.2)	Michael Watkins, BC

Step IIa – Compliance with methods, procedures, and contracts
Step IIb – Compliance with QAPP quality objectives

Usability Assessment

Evaluation Procedure:

- The geotechnical results will be evaluated with respect to federal and state guidance and standard engineering principals.
- Liquid level measurement results will be reviewed to determine the presence/absence of LNAPL.
- Analytical results will be evaluated with respect to QA assessment and their ability to satisfy project objectives.

Personnel responsible for performing the usability assessment:

- Andrew McCorkle, Quality Assurance Officer, BC.

Usability Assessment Documentation:

- Laboratory summary reports
- Laboratory QA reports
- Brief narrative describing data review and data usability will be presented in the Remedial Design Report

ATTACHMENT B. ANALYTICAL LABORATORY QA MANUAL AND SOPS

Cover Page:

Quality Assurance Manual

TestAmerica North Canton
4101 Shuffle Street NW
North Canton, OH 44720
Phone: 330-497-9396
Fax: 330-497-0772

www.testamericainc.com

Copyright Information:
This documentation has been prepared by TestAmerica Analytical Testing Corp. and its affiliates ("TestAmerica"), solely for their own use and the use of their customers in evaluating their qualifications and capabilities in connection with a particular project. The user of this document agrees by its acceptance to return it to TestAmerica upon request and not to reproduce, copy, lend, or otherwise disclose its contents, directly or indirectly, and not to use if for any other purpose other than that for which it was specifically provided. The user also agrees that where consultants or other outside parties are involved in the evaluation process, access to these documents shall not be given to said parties unless those parties also specifically agree to these conditions.

THIS DOCUMENT CONTAINS VALUABLE CONFIDENTIAL AND PROPRIETARY INFORMATION. DISCLOSURE, USE OR REPRODUCTION OF THESE MATERIALS WITHOUT THE WRITTEN AUTHORIZATION OF TESTAMERICA IS STRICTLY PROHIBITED. THIS UNPUBLISHED WORK BY TESTAMERICA IS PROTECTED BY STATE AND FEDERAL LAW OF THE UNITED STATES. IF PUBLICATION OF THIS WORK SHOULD OCCUR THE FOLLOWING NOTICE SHALL APPLY:
©COPYRIGHT 2007 TESTAMERICA ANALYTICAL TESTING CORP. ALL RIGHTS RESERVED

Facility Distribution No. _____ **Distributed To:_____**

Title Page:

Quality Assurance Manual
Approval Signatures

Laboratory Director – Opal Davis-Johnson	12/10/07 Date
Quality Manager – Dorothy Leeson	12/10/07 Date
Technical Director – Dr. Mark Bruce	12/10/07 Date

SECTION 2

TABLE OF CONTENTS

Section No.	Title	Page No.	Effective Date
-	COVER PAGE	COVER	01/01/2008
1.0	**TITLE PAGE**	1-1	01/01/2008
2.0	TABLE OF CONTENTS	2-1	01/01/2008
3.0	INTRODUCTION	3-1	01/01/2008
3.1	Introduction And Compliance References	3-1	01/01/2008
3.2	Terms And Definitions	3-1	01/01/2008
3.3	Scope / Fields Of Testing	3-1	01/01/2008
3.4	Management Of The Manual	3-2	01/01/2008
4.0	ORGANIZATION AND MANAGEMENT *(NELAC 5.4.1)*	4-1	01/01/2008
4.1	Overview	4-1	01/01/2008
4.2	Roles And Responsibilities	4-2	01/01/2008
5.0	QUALITY SYSTEM *(NELAC 5.4.2)*	5-1	01/01/2008
5.1	Quality Policy Statement	5-1	01/01/2008
5.2	Ethics And Data Integrity	5-1	01/01/2008
5.3	Quality System Supporting Documentation	5-2	01/01/2008
5.4	Qa/Qc Objectives For The Measurement Of Data	5-3	01/01/2008
5.5	Criteria For Quality Indicators	5-5	01/01/2008
5.6	Statistical Quality Control	5-5	01/01/2008
5.7	Quality System Metrics	5-6	01/01/2008
6.0	DOCUMENT CONTROL *(NELAC 5.4.3)*	6-1	01/01/2008
6.1	Overview	6-1	01/01/2008
6.2	Document Approval And Issue	6-1	01/01/2008
6.3	Procedures For Document Control Policy	6-2	01/01/2008
6.4	Obsolete Documents	6-2	01/01/2008
7.0	REVIEW OF WORK REQUEST	7-1	01/01/2008
7.1	Overview	7-1	01/01/2008
7.2	Review Sequence And Key Personnel	7-2	01/01/2008
7.3	Documentation	7-3	01/01/2008
8.0	SUBCONTRACTING OF TESTS *(NELAC 5.4.5)*	8-1	01/01/2008
8.1	Overview	8-1	01/01/2008
8.2	Qualifying And Monitoring Subcontractors	8-2	01/01/2008
8.3	Oversight And Reporting	8-5	01/01/2008
8.4	Contingency Planning	8-6	01/01/2008
9.0	PURCHASING SERVICES AND SUPPLIES *(NELAC 5.4.6)*	9-1	01/01/2008
9.1	Overview	9-1	01/01/2008

Section No.	Title	Page No.	Effective Date
9.2	Glassware	9-1	01/01/2008
9.3	Reagents, Standards & Supplies	9-1	01/01/2008
9.4	Purchase Of Equipment/Instruments/Software	9-3	01/01/2008
9.5	Services	9-4	01/01/2008
9.6	Suppliers	9-4	01/01/2008
10.0	SERVICE TO THE CLIENT *(NELAC 5.4.7)*	10-1	01/01/2008
10.1	Overview	10-1	01/01/2008
10.2	Special Services	10-1	01/01/2008
10.3	Client Communication	10-1	01/01/2008
10.4	Reporting	10-1	01/01/2008
10.5	Client Surveys	10-2	01/01/2008
11.0	COMPLAINTS *(NELAC 5.4.8)*	11-1	01/01/2008
11.1	Overview	11-1	01/01/2008
11.2	External Complaints	11-1	01/01/2008
11.3	Internal Complaints	11-2	01/01/2008
11.4	Management Review	11-2	01/01/2008
12.0	CONTROL OF NON-CONFORMING WORK *(NELAC 5.4.9)*	12-1	01/01/2008
12.1	Overview	12-1	01/01/2008
12.2	Responsibilities And Authorities	12-1	01/01/2008
12.3	Evaluation Of Significance And Actions Taken	12-2	01/01/2008
12.4	Prevention Of Nonconforming Work	12-2	01/01/2008
12.5	Method Suspension/Restriction (Stop Work Procedures)	12-2	01/01/2008
13.0	CORRECTIVE ACTION *(NELAC 5.4.10)*	13-1	01/01/2008
13.1	Overview	13-1	01/01/2008
13.2	Definitions	13-1	01/01/2008
13.3	General	13-1	01/01/2008
13.4	Closed Loop Corrective Action Process	13-2	01/01/2008
13.5	Technical Corrective Actions	13-3	01/01/2008
13.6	Basic Corrections	13-3	01/01/2008
14.0	PREVENTIVE ACTION *(NELAC 5.4.11)*	14-1	01/01/2008
14.1	Overview	14-1	01/01/2008
14.2	Management Of Change	14-2	01/01/2008
15.0	CONTROL OF RECORDS *(NELAC 5.4.12)*	15-1	01/01/2008
15.1	Overview	15-1	01/01/2008
15.2	Technical And Analytical Records	15-5	01/01/2008
15.3	Laboratory Support Activities	15-6	01/01/2008
15.4	Administrative Records	15-6	01/01/2008
15.5	Records Management, Storage And Disposal	15-6	01/01/2008
16.0	AUDITS *(NELAC 5.4.13)*	16-1	01/01/2008
16.1	Overview	16-1	01/01/2008
16.2	Technical And Analytical Records	16-1	01/01/2008
16.3	External Audits	16-3	01/01/2008
16.4	Audit Findings	16-5	01/01/2008
17.0	MANAGEMENT REVIEWS *(NELAC 5.4.14)*	17-1	01/01/2008

Section No.	Title	Page No.	Effective Date
17.1	Quality Assurance Report	17-1	01/01/2008
17.2	Annual Management Review	17-2	01/01/2008
17.3	Potential Integrity Related Managerial Reviews	17-3	01/01/2008
18.0	PERSONNEL *(NELAC 5.5.2)*	18-1	01/01/2008
18.1	Overview	18-1	01/01/2008
18.2	Education And Experience Requirements For Technical Personnel	18-1	01/01/2008
18.3	Training	18-3	01/01/2008
18.4	Data Integrity And Ethics Training Program	18-4	01/01/2008
19.0	ACCOMMODATIONS AND ENVIRONMENTAL CONDITIONS *(NELAC 5.5.3)*	19-1	01/01/2008
19.1	Overview	19-1	01/01/2008
19.2	Environment	19-1	01/01/2008
19.3	Work Areas	19-2	01/01/2008
19.4	Floor Plan	19-2	01/01/2008
19.5	Building Security	19-2	01/01/2008
20.0	TEST METHODS AND METHOD VALIDATION *(NELAC 5.5.4)*	20-1	01/01/2008
20.1	Overview	20-1	01/01/2008
20.2	STANDARD OPERATING PROCEDURES (Sops)	20-1	01/01/2008
20.3	Laboratory Methods Manual	20-1	01/01/2008
20.4	Selection Of Methods	20-2	01/01/2008
20.5	Laboratory Developed Methods And Non-Standard Methods	20-16	01/01/2008
20.6	Validation Of Methods	20-16	01/01/2008
20.7	Method Detection Limits (Mdl)/ Limits Of Detection (Lod)	20-18	01/01/2008
20.8	Instrument Detection Limits (Idl)	20-19	01/01/2008
20.9	Verification Of Detection And Reporting Limits	20-20	01/01/2008
20.10	Retention Time Windows	20-20	01/01/2008
20.11	Evaluation Of Selectivity	20-21	01/01/2008
20.12	Estimation Of Uncertainty Of Measurement	20-21	01/01/2008
20.13	Control Of Data	20-22	01/01/2008
21.0	EQUIPMENT (AND CALIBRATIONS) *(NELAC 5.5.5)*	21-1	01/01/2008
21.1	Overview	21-1	01/01/2008
21.2	Preventive Maintenance	21-1	01/01/2008
21.3	Support Equipment	21-3	01/01/2008
21.4	Instrument Calibrations	21-5	01/01/2008
21.5	Policy On Tentatively Identified Compounds (Tics) – Gc/Ms Analysis	21-13	01/01/2008
21.6	Policy On Gc/Ms Tuning	21-13	01/01/2008
22.0	MEASUREMENT TRACEABILITY *(NELAC 5.5.6)*	22-1	01/01/2008
22.1	Overview	22-1	01/01/2008
22.2	Nist-Traceable Weights And Thermometers	22-2	01/01/2008
22.3	Reference Standards / Materials	22-2	01/01/2008

Section No.	Title	Page No.	Effective Date
22.4	Documentation And Labeling Of Standards, Reagents, And Reference Materials	22-3	01/01/2008
23.0	SAMPLING *(NELAC 5.5.7)*	23-1	01/01/2008
23.1	Overview	23-1	01/01/2008
23.2	Sampling Containers	23-1	01/01/2008
23.3	Field Quality Control (Qc)	23-1	01/01/2008
23.4	Definition Of Holding Time	23-2	01/01/2008
23.5	Sampling Containers, Preservation Requirements, Holding Times	23-3	01/01/2008
23.6	Sample Aliquots / Subsampling	23-3	01/01/2008
24.0	HANDLING OF SAMPLES *(NELAC 5.5.8)*	24-1	01/01/2008
24.1	Chain Of Custody (Coc)	24-1	01/01/2008
24.2	Sample Receipt	24-2	01/01/2008
24.3	Sample Acceptance Policy	24-4	01/01/2008
24.4	Sample Storage	24-4	01/01/2008
24.5	Hazardous Samples And Foreign Soils	24-5	01/01/2008
24.6	Sample Shipping	24-5	01/01/2008
24.7	Sample Disposal	24-5	01/01/2008
25.0	ASSURING THE QUALITY OF TEST RESULTS *(NELAC 5.5.9)*	25-1	01/01/2008
25.1	Overview	25-1	01/01/2008
25.2	Controls	25-1	01/01/2008
25.3	Negative Controls	25-1	01/01/2008
25.4	Positive Controls	25-2	01/01/2008
25.5	Sample Matrix Controls	25-4	01/01/2008
25.6	Acceptance Criteria (Control Limits)	25-6	01/01/2008
25.7	METHOD DETECTION LIMITS (Mdls)	25-8	01/01/2008
25.8	Additional Procedures To Assure Quality Control	25-8	01/01/2008
26.0	REPORTING RESULTS *(NELAC 5.5.10)*	26-1	01/01/2008
26.1	Overview	26-1	01/01/2008
26.2	Test Reports	26-1	01/01/2008
26.3	Reporting Level Or Report Type	26-3	01/01/2008
26.4	Supplemental Information For Test	26-4	01/01/2008
26.5	Environmental Testing Obtained From Subcontractors	26-4	01/01/2008
26.6	Client Confidentiality	26-4	01/01/2008
26.7	Format Of Reports	26-5	01/01/2008
26.8	Amendments To Test Reports	26-5	01/01/2008
26.9	Policies On Client Requests For Amendments	26-5	01/01/2008

LIST OF TABLES

Table No.	Title	Page	Effective Date
9-1	Storage of Reagents and Chemicals	9-6	01/01/2008
13-1	Example - General Corrective Action Procedures	13-5	01/01/2008
15-1	Records and Retention Schedule	15-1	01/01/2008
15-2	Special Record Retention Requirements	15-3	01/01/2008
16-1	Audit Types and Frequency	16-1	01/01/2008
20-1	Wet Chemistry Methods	20-3	01/01/2008
20-2	Methods for Mercury by Cold Vapor Atomic Absorption	20-7	01/01/2008
20-3	Methods for Mercury by Cold Vapor Atomic Fluororescence	20-7	01/01/2008
20-4	Methods for Metals by ICP and ICPMS	20-7	01/01/2008
20-5	Metals Sample Preparation Methods	20-11	01/01/2008
20-6	Organic Sample Preparation Methods	20-12	01/01/2008
20-7	Organic Method of Analysis	20-14	01/01/2008
21-1	Example - Laboratory Equipment & Instrumentation	21-15	01/01/2008
21-2	Example – Laboratory Balance Inventory	21-19	01/01/2008
21-3	Example – Laboratory Refrigerators, Freezers, Ovens, Thermometers, Steambaths, Hotblocks, and Hotplates	21-20	01/01/2008
21-4	Example: Schedule of Routine Maintenance	21-22	01/01/2008
21-5	Example: Periodic Equipment Calibrations	21-32	01/01/2008
21-6	Example: Preventive Maintenance Procedures	21-33	01/01/2008

Table No.	Title	Page	Effective Date
23-1	Inorganic Sample Containers, Preservatives, and Holding Times	23-5	01/01/2008
23-2	Organic Sample Containers, Preservatives, and Holding Times	23-15	01/01/2008
23-3	Sample Containers, Preservatives, and Holding Times for TCLP and SPLP	23-23	01/01/2008

LIST OF FIGURES

Figure No.	Title	Page	Effective Date
3-1	Example - Format for a QA/QC Policy Memorandum	3-4	01/01/2008
4-1	Corporate Organizational Chart	4-9	01/01/2008
8-1	Example - Client-Approved Subcontractor Form	8-7	01/01/2008
8-2	Example - Subcontracting Laboratory Approval Form (Initial / Renewal)	8-8	01/01/2008
9-2	Example - JD Edwards Vendor Add Request Form	9-7	01/01/2008
16-1	Example - Internal Audit Workbook	16-7	01/01/2008
16-2	Example – Internal Audit System Checklist	16-8	01/01/2008
17-1	Example - QA Monthly Report to Management	17-4	01/01/2008
17-2	Example – Laboratory Metrics Categories	17-6	01/01/2008
20-1	Example – Demonstration of Capability Documentation	20-31	01/01/2008
20-2	Example – New Method / Additional Analyte Checklist	20-32	01/01/2008
20-3	Work Flow	20-33	01/01/2008
24-1	Example: Chain of Custody (COC)	24-7	01/01/2008
24-2	Example: Custody Seals	24-8	01/01/2008
24-3	Example: Internal Chain of Custody (COC)	24-9	01/01/2008
24-4	Example: Cooler Receipt Form	24-11	01/01/2008

LIST OF APPENDICES

Appendix No.	Title	Page	Effective Date
1	TestAmerica Ethics Policy No. CA-L-P-001	Appendix 1-1	01/01/2008
2	Example - Laboratory Organization Chart	Appendix 2-1	01/01/2008
3	Laboratory Floor Plan	Appendix 3-1	01/01/2008
4	Laboratory Method Listing	Appendix 4-1	01/01/2008
5	Laboratory Reporting Limits	Appendix 5-1	01/01/2008
6	Glossary/Acronyms	Appendix 6-1	01/01/2008
7	Laboratory Certifications, Accreditations, Validations	Appendix 7-1	01/01/2008
8	Data Qualifiers	Appendix 8-1	01/01/2008

SOPs AND POLICIES REFERRED TO IN THE QA MANUAL

SOP/Policy Reference	Title
CA-C-S-001	Work Sharing Process
CA-L-S-001	Internal Investigation of Potential Data Discrepancies and Determination for Data Recall
CA-L-P-001	Ethics Policy
CA-L-P-002	Contract Compliance Policy
CA-L-S-002	Subcontracting Procedures
CA-Q-S-001	Solvent and Acid Lot Testing and Approval
CA-Q-S-002	Acceptable Manual Integration Practices
CA-Q-S-003	Management of Change Procedure
CA-Q-S-004	Method Compliance & Data Authenticity Audits
CA-Q-S-005	Calibration Curves (General)
CA-T-P-001	Qualified Products List
CORP-MS-0001NC	GC/MS Analysis Based on Method 8270C,
CORP-MS-0002NC	Determination of Volatile Organics by GC/MS based on Method 8260B & 8260A).
CORP-QA-0010	Nonconformance and Corrective Action System
CORP-QA-0013	Employee Orientation and Training
CW-F-P-002	Authorization Matrix
CW-F-S-004	Controlled Purchases Policy
CW-L-P-001	Record Retention
CW-Q-S-001	Corporate Document Control and Archiving
CW-Q-S-002	Writing a Standard Operating Procedure (SOPs)
NC-QA-0012	Shipping Department
NC-QA-015	Equipment Monitoring and Thermometer Calibration
NC-QA-0017	Standards and Reagents
NC-QA-0018	Statistical Evaluation of Data and Development of Control Charts
NC-QA-0019	Records Information Management
NC-QA-0020	Laboratory Holding Blanks
NC-QA-0021	Evaluation of Method Detection Limits for Chemical Tests

NC-QA-0027	Preparation and Management of Standard Operating Procedures
NC-SC-0005	Sample Receiving and Sample Control
NC-SC-0006	Sample Procurement Protocol
QA-003	TestAmerica North Canton Quality Control Program
S-C-002	Complaint Handling and Service Recovery
S-Q-001	Document Control
S-Q-004	Acceptable Manual Integration Practices

SECTION 3

INTRODUCTION
(NELAC 5.1 - 5.3)

3.1 INTRODUCTION AND COMPLIANCE REFERENCES

The TestAmerica North Canton Quality Assurance Manual (QAM) is a document prepared to define the overall policies, organization objectives and functional responsibilities for achieving TestAmerica data quality goals. Each TestAmerica laboratory maintains a local perspective in its scope of services and client relations and maintains a national perspective in terms of quality.

The QAM has been prepared to assure compliance with the 2003 National Environmental Laboratory Accreditation Conference (NELAC) standards and ISO/IEC Guide 17025 (1999). In addition, the policies and procedures outlined in this manual are compliant with the various accreditation and certification programs listed in Appendix 7. The relevant NELAC section is included in the heading of each QAM section.

The QAM has been prepared to be consistent with the requirements of the following documents:

- EPA 600/4-79-019, *Handbook for Analytical Quality Control in Water and Wastewater Laboratories,* EPA, March 1979.
- EPA SW-846, *Test Methods for the Evaluation of Solid Waste, 3rd Edition,* September 1986; Update I, July 1992; Update II, September 1994; and Update III, December 1996.
- Federal Register, 40 CFR Parts 136, 141, 172, 173, 178, 179 and 261.
- U.S. Department of Defense, *Quality Systems Manual for Environmental Laboratories*, Final Version 3, January 2006.
- Toxic Substances Control Act (TSCA).

3.2 TERMS AND DEFINITIONS

A Quality Assurance Program is a company-wide system designed to ensure that data produced by TestAmerica North Canton conforms to the standards set by state and/or federal regulations. The program functions at the management level through company goals and management policies, and at the analytical level through Standard Operating Procedures (SOPs) and quality control. The TestAmerica program is designed to minimize systematic error, encourage constructive, documented problem solving, and provide a framework for continuous improvement within the organization.

Refer to Appendix 6 for the Glossary/Acronyms.

3.3 SCOPE / FIELDS OF TESTING

TestAmerica analyzes thousands of environmental and industrial samples every month. Sample matrices vary among effluent water, groundwater, hazardous waste, sludge, wipes, and soils. The Quality Assurance Program contains specific procedures and methods to test samples of differing matrices for chemical, physical and biological parameters. The Program also contains guidelines on maintaining documentation of analytical process, reviewing results, servicing clients and

tracking samples through the laboratory. The technical and service requirements of all requests to provide analyses are thoroughly evaluated before commitments are made to accept the work. Measurements are made using published reference methods or methods developed and validated by the laboratory.

The methods covered by this manual include the most frequently requested water, industrial waste, and soil methodologies needed to provide analytical services in the United States and its territories. The specific list of test methods used by the laboratory can be found in Appendix 4. The approach of this manual is to define the minimum level of quality assurance and quality control necessary to meet requirements. All methods performed by TestAmerica North Canton shall meet these criteria as appropriate. In some instances, quality assurance project plans (QAPPs), project specific data quality objectives (DQOs) or local regulations may require criteria other than those contained in this manual. In these cases, the laboratory will abide by the requested criteria following review and acceptance of the requirements by the Laboratory Director, the Quality Assurance (QA) Manager, and the Technical Director. In some cases, QAPPs and DQOs may specify less stringent requirements. The Laboratory Director and the QA Manager must determine if it is in the lab's best interest to follow the less stringent requirements.

- Specific requirements delineated in project plans may supersede general quality requirements described in this manual. Ohio VAP requirements are listed throughout the document.

3.4 MANAGEMENT OF THE MANUAL

3.4.1 Review Process

The manual is reviewed annually by the QA Manager and laboratory personnel to assure that it reflects current practices and meets the requirements of TestAmerica North Canton clients and regulators. Occasionally, the manual may need changes in order to meet new or changing regulations and operations. The QA Manager will review the changes in the normal course of business and incorporate changes into revised sections of the document. The updates will be reviewed by the QA Manager, Laboratory Director/Manager, Technical Director(s), relevant operational staff and Corporate Quality Assurance (if a change is made to the Corporate template) and then formally incorporated into the document in periodic updates. The QAM is based on a Corporate QAM Template that is prepared and approved by the Chief Operating Officers (COOs) and Corporate Quality Assurance. This template is reviewed annually by the COOs, Corporate Quality, and each laboratory. Necessary changes are coordinated by the Vice President of Quality and Environmental Health & Safety (EHS) and distributed to each laboratory for inclusion in the laboratory specific QA Manuals.

Policies in the QAM that require immediate attention may be addressed through the use of Corporate QA/QC Policy Memoranda. QA/QC Policy Memoranda are published from time to time to facilitate immediate changes to QA/QC Policy. QA/QC Policy Memoranda supersede the QAM and all other SOPs (refer to Section 5.3). All policy memoranda are dated, archived and distributed by their placement into the front of the QAM between the signature page and Section 2. At a minimum, each policy memorandum is approved by the same authorized signatories as shown on the cover page of the QA Manual. In addition, Corporate QA/QC Policy

Memoranda are signed by the COOs and VP of Quality and EHS. The QA/QC Policy Memoranda are incorporated into the QAM during the periodic updates. Policy memorandum may also include an expiration date if appropriate. An example format can be found in Figure 3-1. A similar procedure is followed for local laboratory changes.

3.4.2 Control

This manual is considered confidential within TestAmerica and may not be altered in any manner by other than a duly appointed representative from TestAmerica. If the document has been provided to external users or regulators, it is for the exclusive purpose of reviewing TestAmerica North Canton quality systems and shall not be used in any other way without the written permission of an appointed representative of TestAmerica. The procedure for control of distribution is incorporated by reference to SOP S-Q-001, Document Control.

The order of precedence in the event of a conflict between policies is outlined in Section 5.3 of this Quality Assurance Manual.

Figure 3-1.

Example - Format for a QA/QC Policy Memorandum

TestAmerica North Canton **SOP/LQM CHANGE FORM**	
SOP/LQM NUMBER:	
TITLE:	
SECTION(S) AFFECTED BY CHANGE:	
REASON FOR ADDITION OR CHANGE:	
CHANGE EFFECTIVE FROM: (DATE):	
CHANGE OR ADDITION:	
SUBMITTED BY/DATE:	
*APPROVED BY:	
Technical Reviewer Signature	Date
Environmental Health & Safety Signature	Date
QA Signature	Date
Technical Director (if applicable)	Date
Laboratory Director Signature	Date

SECTION 4

ORGANIZATION AND MANAGEMENT
(NELAC 5.4.1)

4.1 OVERVIEW

TestAmerica North Canton is part of a national network of laboratories known as TestAmerica. This Quality Assurance Manual (QAM) is applicable to the TestAmerica North Canton laboratory only.

TestAmerica North Canton Laboratory
4101 Shuffle Drive NW
North Canton, OH 44720
EPA I.D. Code No. 9503

The Corporate organization chart can be found in Figure 4-1 and the laboratory organization chart can be found in Appendix 2. The locations of other TestAmerica labs are as follows:

Aerotech Environmental Laboratories (AEL)
TestAmerica Anchorage
TestAmerica Austin
TestAmerica Buffalo
TestAmerica Buffalo Grove
TestAmerica Burlington
TestAmerica Cedar Falls
TestAmerica Chicago
TestAmerica Colorado Springs
TestAmerica Connecticut
TestAmerica Corpus Christi
TestAmerica Dayton
TestAmerica Denver
TestAmerica Edison
TestAmerica Honolulu
TestAmerica Houston
TestAmerica Irvine
TestAmerica King of Prussia
TestAmerica Knoxville
TestAmerica Los Angeles
TestAmerica Mobile
TestAmerica Morgan Hill
TestAmerica Nashville
TestAmerica New Orleans
TestAmerica Ontario
TestAmerica Orlando
TestAmerica Pensacola
TestAmerica Phoenix
TestAmerica Pittsburgh

TestAmerica Portland
TestAmerica Richland
TestAmerica San Francisco
TestAmerica Savannah
TestAmerica Seattle
TestAmerica Spokane
TestAmerica St. Louis
TestAmerica Tacoma
TestAmerica Tallahassee
TestAmerica Tampa
TestAmerica Valparaiso
TestAmerica Watertown
TestAmerica West Sacramento
TestAmerica Westfield

4.2 ROLES AND RESPONSIBILITIES

In order for the Quality Assurance Program to function properly, all members of the staff must clearly understand and meet their individual responsibilities as they relate to the quality program. The following descriptions define each role in its relationship to the Quality Assurance Program. More extensive job descriptions are maintained by laboratory management.

4.2.1 Quality Assurance Program

The responsibility for quality lies with every employee of TestAmerica North Canton. All employees have access to the QAM and are responsible for knowing the content of this manual and upholding the standards therein. Each person carries out his/her daily tasks in a manner consistent with the goals and in accordance with the procedures in this manual and the laboratory's SOPs.

4.2.2 Chairman/Chief Executive Officer (CEO)

The Chairman/CEO is the Chairman of the Board of Directors and is ultimately responsible for the quality and performance of all TestAmerica facilities. Together with the President/CEO of the Analytical Division, the Chairman/CEO establishes the overall quality standard and data integrity program for the company, providing the necessary leadership and resources to assure that the standard and integrity program are met.

4.2.3 President/Chief Executive Officer (CEO)

The President/CEO is a member of the Board of Directors and is ultimately responsible for the quality and performance of all TestAmerica facilities. Together with the Chairman/CEO, the President/CEO establishes the overall quality standard and data integrity program for the Analytical Division, providing the necessary leadership and resources to assure that the standard and integrity program are met.

4.2.4 Chief Operating Officer (COO) – East and West

The COOs serve as the ranking executives for all respective analytical laboratory operational functions and report to the President/CEO of the Analytical Division. They are responsible for the daily management of all analytical laboratories, long-term planning and development of technical policies and management plans. They ensure the attainment of corporate objectives through the selection, development, motivation, and evaluation of top management personnel. The COOs approve all operating budgets and capital expenditures. The COOs sign-off on the final QAM template that contains company policies for implementing the Quality Program.

4.2.5 General Manager (GM)

Each GM reports directly to a COO. Each GM has full responsibility for the overall administrative and operational management of their respective laboratories. The GM's responsibilities include allocation of personnel and resources, long-term planning, setting goals, and achieving the financial, business, and quality objectives of TestAmerica. The GM ensures timely compliance with corporate management directives, policies, and management systems reviews. The GM is also responsible for restricting any laboratory from performing analyses that cannot be consistently and successfully performed to meet the standards set forth in this manual.

4.2.6 Vice President of Quality and Environmental Health and Safety (VP-QA/EHS)

The Vice President of QA/EHS reports directly to the Chairman/CEO. With the aid of the Analytical Division and Non-Analytical Division Senior Management Teams, Laboratory Director/ Managers, Quality Directors, EHS Directors, QA Managers and EHS Coordinators, the VP-QA/EHS has the responsibility for the establishment, general overview and Corporate maintenance of the Quality Assurance and Environmental, Health and Safety Program within TestAmerica. Additional responsibilities include:

- Review of QA/QC aspects of Corporate SOPs, national projects and expansions or changes in services.
- Coordination/preparation of the Corporate QAM Template that is used by each laboratory to prepare its own laboratory-specific QAM.
- Maintenance of Corporate Policies, Quality Memorandums and SOPs. Maintenance of data investigation records that are reported to Corporate Management.
- Work with various organizations outside of TestAmerica to further the development of quality standards and represent TestAmerica at various trade meetings.
- Preparation of a monthly report that includes quality metrics across the Analytical Division and a summary of any quality related initiatives and issues.
- With the assistance of the Corporate Senior Management Teams and the EHS Directors, development and implementation of the TestAmerica Environmental, Health and Safety Program.

4.2.7 Quality Directors (Corporate)

The Quality Directors report to the VP-QA/EHS. Together with the VP-QA/EHS, the Quality Directors have the responsibility for the establishment, general overview and maintenance of

the Analytical Division's Quality Assurance Program within TestAmerica. The Quality Directors are responsible for:

- Oversight of the QA/QC programs within each laboratory. This includes a final review of each laboratory-specific QAM and receipt of each laboratory's QA monthly report.
- Review of QA/QC aspects of national projects.
- Assistance with certification activities.

4.2.8 Ethics and Compliance Officers (ECOs)

TestAmerica has designated two senior members of the Corporate staff to fulfill the role of Ethics and Compliance Officer (ECO) – VP-QA/EHS and VP-Client and Technical Services. Each ECO acts as a back-up to the other ECO and both are involved when data investigations occur. Each ECO has a direct line of communication to the entire senior Corporate and lab management staff.

The ECOs ensure that the organization distributes the data integrity and ethical practices policies to all employees and ensures annual trainings and orientation of new hires to the ethics program and its policies. The ECO is responsible for establishing a mechanism to foster employee reporting of incidents of illegal, unethical, or improper practices in a safe and confidential environment.

The ECOs monitor and audit procedures to determine compliance with policies and to make recommendations for policy enhancements to the CEOs, COOs, Laboratory Director/Manager or other appropriate individuals within the laboratory. The ECO will assist the laboratory QA Manager in the coordination of internal auditing of ethical policy related activities and processes within the laboratory, in conjunction with the laboratories regular internal auditing function.

The ECOs will also participate in investigations of alleged violations of policies and work with the appropriate internal departments to investigate misconduct, remedy the situation, and prevent recurrence of any such activity.

4.2.9 Vice President of Client and Technical Services

The Vice President (VP) of Client and Technical Services is responsible for offerings to clients including risk management, technical assistance, legal compliance and contract administration. The VP of Client and Technical Services provides support and direction to the Managers of these areas, and supports the COOs in decisions regarding long term planning, resource allocation and capital expenditures.

4.2.10 Director of Technical Services

The Director of Technical Services is responsible for establishing, implementing and communicating TestAmerica's Analytical Division's Technical Policies, SOPs, and Manuals. Other responsibilities include conducting technical assessments as required, acting as a technical resource in national contracts review, coordinating new technologies, establishing best practices, advising staff on technology advances, innovations, and applications.

4.2.11 Chief Information Officer (CIO)

The CIO is responsible for establishing, implementing and communicating TestAmerica Information Technology (IT) Policies, SOPs, and Manuals. Other responsibilities include coordinating new technologies; development of electronic communication tools such as TestAmerica intranet and internet sites; ensuring data security and documentation of software; ensuring compliance with the NELAC standard; and assistance in establishing, updating, and maintaining Laboratory Information Management Systems (LIMS) at the various TestAmerica facilities.

4.2.12 Environmental Health and Safety Directors (EHSDs) (Corporate)

The EHSDs report directly to the VP-QA/EHS. The EHSDs are responsible for the development and implementation of the TestAmerica Environmental, Health and Safety program. Responsibilities include:

- Consolidation and tracking all safety and health-related information and reports for the company, and managing compliance activities for TestAmerica locations.
- Coordination/preparation of the corporate Environmental, Health and Safety Manual Template that is used by each laboratory to prepare its own laboratory-specific Safety Manual/ CHP.
- Preparation of information and training materials for laboratory EHS Coordinators.
- Assistance in the internal and external coordination of employee exposure and medical monitoring programs to insure compliance with applicable safety and health regulations.
- Serving as Department of Transportation (D.O.T.) focal point and providing technical assistance to location management.
- Serving as Hazardous Waste Management main contact and providing technical assistance to location management.

4.2.13 Laboratory Director

- Reports directly to the Regional General Manager
- Responsible for implementation and adherence by lab staff to the TestAmerica North Canton QAM and all policies and procedures within the laboratory
- Has signature authority for QAM, policies, SOPs, and contracts (as detailed in TestAmerica policy)
- Assesses the effectiveness of the QAM within the operation
- Maintains adequate trained staff documented on organization charts
- Responsible for implementing internal/external audit findings corrective actions

4.2.14 Quality Assurance Manager

- Reports directly to the Laboratory Director and, for all QA matters, to the Corporate QA Director to maintain independence of QA oversight
- Responsible for the implementing and communicating the QAM
- Maintains, approves, and implements the QAM

- Has joint signature authority, with the Laboratory Director and Technical Director for approval of quality documents, e.g., QAM, policies, and SOPs
- Directs controlled distribution of laboratory quality documents
- Provides Quality System training to all new personnel
- Reviews and approves documentation of analyst training records
- Serves as a focal point for QA and QC issues, reviews corrective actions and recommends resolution for recurring nonconformances within the laboratory
- Assists in maintaining regulatory analytical compliance, including maintaining certifications, and in this regard has signature authority for laboratory quality documents
- Monitors data quality measures via statistical methods to verify that the laboratory routinely meets stated quality goals
- Performs systems, data, contract compliance, and surveillance audits.
- Hosts external audits conducted by outside agencies
- Responsible for approving quality control reference data changes in the LIMS
- Oversees the selection, review, and approval of analytical subcontractors
- Prepares monthly QA Reports to management describing significant quality events
- Has the final authority to accept or reject data and to stop work in progress in the event that procedures or practices compromise the validity and integrity of analytical data
- Responsible for implementing internal/external audit findings corrective actions

4.2.15 Operations Manager/Laboratory Supervisor

- Reports directly to the Laboratory Director
- Supervises daily activities of the Operational Groups
- Schedules analytical operations
- Supervises QC activities performed as a part of routine analytical operations
- Implements data review procedures
- Supervises the preparation and maintenance of laboratory records
- Supervises maintenance of instruments and scheduling of repairs
- Works with the Project Managers and Group Leaders to assure the requirements of projects are met in a timely manner
- Supervises daily activities of the Sample Control Group.

4.2.16 Laboratory Technical Director

- Reports directly to Laboratory Director
- Responsible for the technical operation of the laboratory
- Has joint signature authority for QAM, policies, SOPs, and training records
- Performs technical training in area(s) of expertise
- Interfaces with management on technical needs and solving day-to-day technical issues
- Investigates technical issues related to projects as directed by QA
- Evaluates new methods, technical proposals, and statements of work
- Certifies technical laboratory personnel based on education and background to ensure that staff have demonstrated capability in the activities for which they are responsible by reviewing and signing analyst demonstrations.
- Performs other tasks as required by NELAC.

The Technical Director meets the requirements specified in Section 4.1.1.1 of NELAC standards.

4.2.17 Project Management Group Leader

- Reports directly to the Manager of Client Services
- Supervises daily activities of the Project Management and Administrative Groups
- Works with the Operations Manager and/or Group/Team Leaders to ensure the requirements of projects are met in a timely manner

4.2.18 Manager of Client Services

- Reports directly to Laboratory Director
- Supervises Field Analytical Services Group
- Supervises Service Centers
- Supervises daily activities of the customer
- Supervises Service Managers

4.2.19 Customer Service Managers (CSMs)

- Reports directly to the Manager of Client Services
- Defines customer requirements through project definition
- Assesses and assures customer satisfaction
- Provides feedback to management on changing customer needs
- Brings together resources necessary to ensure customer satisfaction.

4.2.20 Project Manager

- Reports directly to the Project Manager Group Leader
- Monitors analytical and QA project requirements for a specified project
- Acts as a liaison between the client and the laboratory staff
- Communicates project-specific requirements to all parties involved
- Assists the laboratory staff with interpretation of work plans, contracts, and QAPP requirements
- Oversees project data packages for completeness and compliance to client needs
- Has signature authority for final reports
- Keeps the laboratory and client informed of project status
- Together with the QA Manager, approves customer requested variances to methods and to standard laboratory protocols
- Monitors, reviews, and evaluates the progress and performance of projects
- Reports client inquiries involving data quality issues or data acceptability to the facility QA Manager and to the operations staff
- Conducts project reviews to assess the laboratory's performance in meeting customer requirements
- Prepares reissue requests for project data
- Responsible for meeting quality requirements.

4.2.21 Group Leader

- Reports directly to the Operations Manager
- Supervises daily activities of analyses within the group
- Supervises QC activities performed as a part of routine analytical operations
- Implements data review procedures
- Supervises the preparation and maintenance of laboratory records
- Evaluates instrument performance and supervises the calibration, preventive maintenance, and scheduling of repairs
- Oversees or performs review and approval of all analytical data
- Reports nonconformances to the appropriate managers
- Responsible for generation of SOPs for their section
- Responsible for meeting quality requirements.

4.2.22 Analyst

- Performs analytical methods and data recording in accordance with documented procedures
- Performs and documents calibration and preventive maintenance
- Performs data processing and data review procedures
- Reports nonconformances to the Supervisor/Manager and QA Manager
- Ensures sample and data integrity by adhering to internal chain-of-custody procedures
- Responsible for meeting quality requirements defined in this LQM and other supporting QA procedures.

4.2.23 Sample Custodian

- Ensures implementation of proper sample receipt procedures, including maintenance of chain-of-custody
- Reports nonconformances associated with condition-upon-receipt of samples
- Logs samples into the LIMS
- Ensures that all samples are stored in the proper environment
- Assists Environmental Health and Safety staff with sample disposal
- Responsible for meeting quality requirements.

4.2.24 Report Production Staff

- Accurately generates and compiles analytical reports and associated deliverables for delivery to the client
- Responsible for meeting quality requirements
- Produce as needed reports that meet the NELAC requirements.

Figure 4-1.

Corporate Organization Chart

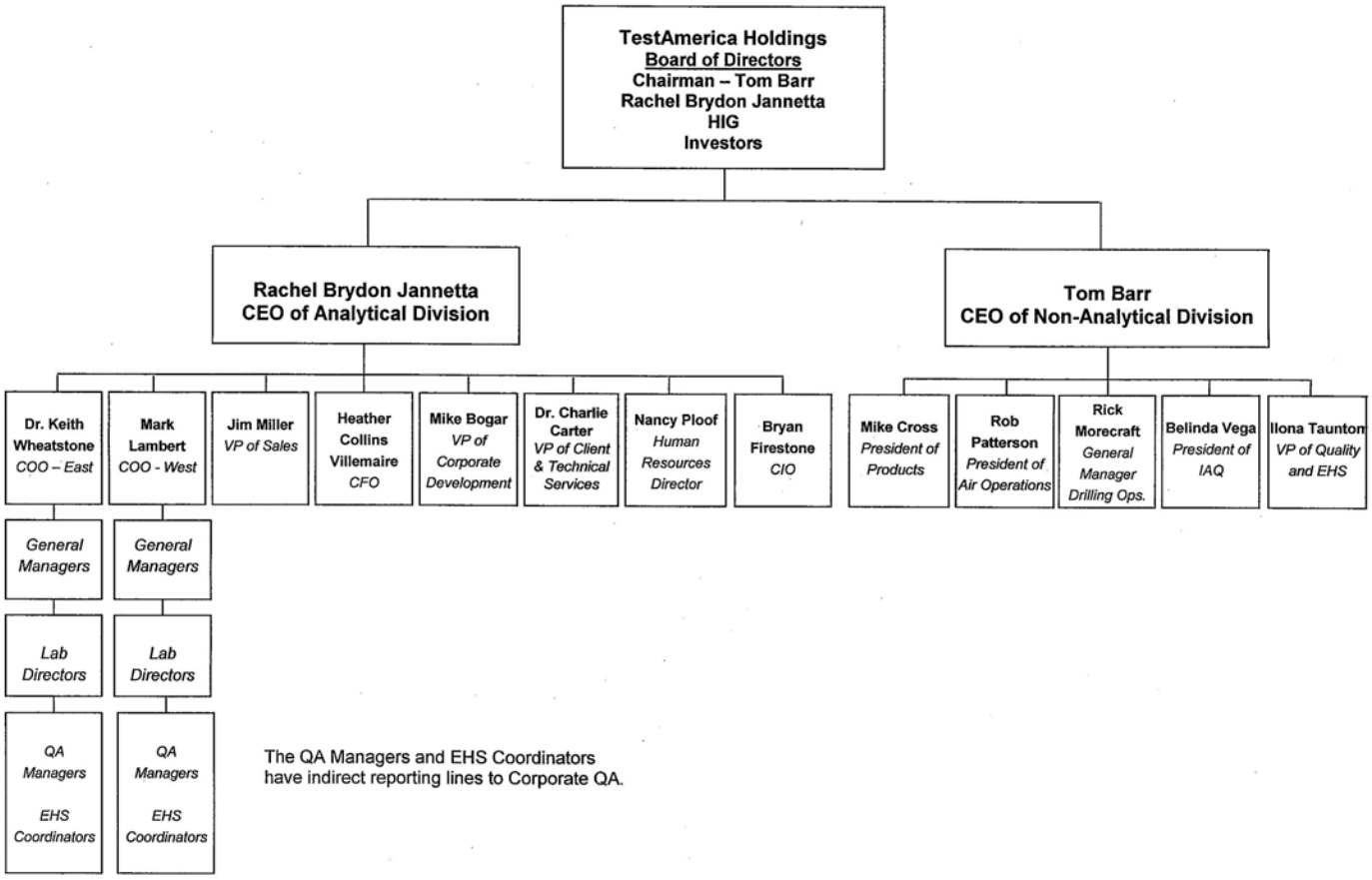

SECTION 5

QUALITY SYSTEM
(NELAC 5.4.2)

5.1 QUALITY POLICY STATEMENT

The management of TestAmerica and TestAmerica North Canton are committed to providing data of known quality to its clients by adhering to approved methodologies, regulatory requirements and the QA/QC protocols described in this manual.

In all aspects of the laboratory and business operations, management is dedicated in maintaining the highest ethical standards. An Ethics Policy sign-off can be viewed in Appendix 1. Training on ethical and legal responsibilities is provided annually and each employee signs off annually on the policy as a condition of employment.

It is TestAmerica's Policy to continually improve systems and provide support to quality improvement efforts in laboratory, administrative and managerial activities. The company recognizes that the implementation of a quality assurance program requires management's commitment and support as well as the involvement of the entire staff.

TestAmerica North Canton strives to provide clients with the highest level of professionalism and the best service practices in the industry.

Every staff member at TestAmerica North Canton plays an integral part in quality assurance and is held responsible and accountable for the quality of their work. It is, therefore, required that all laboratory personnel are trained and agree to comply with applicable procedures and requirements established by this document.

5.2 ETHICS AND DATA INTEGRITY

TestAmerica is committed to ensuring the integrity of its data and meeting the quality needs of its clients. The seven elements of the TestAmerica Ethics and Data Integrity Program include:

- An Ethics Policy (Policy CA-L-P-001) and Employee Ethics Statements (Appendix 1)
- An Ethics and Compliance Officer (ECO)
- A training program
- Self-governance through disciplinary action for violations
- A confidential mechanism for anonymously reporting alleged misconduct and a means for conducting internal investigations of all alleged misconduct (SOP CA-L-S-001)
- Procedures and guidance for recalling data if necessary (SOP CA-L-S-001)
- An effective external and internal monitoring system that includes procedures for internal audits (Section 16)

As an American Council of Independent Laboratories (ACIL) member, all TestAmerica laboratories adhere to the following ACIL Code of Ethics:

- Produce results, which are accurate and include QA/QC information that meets client pre-defined Data Quality Objectives (DQOs).
- Present services in a confidential, honest and forthright manner.
- Provide employees with guidelines and an understanding of the ethical and quality standards of our industry.
- Operate our facilities in a manner that protects the environment and the health and safety of employees and the public.
- Obey all pertinent federal, state and local laws and regulations and encourage other members of our industry to do the same.
- Educate clients as the extent and kinds of services available.
- Assert competency only for work for which adequate personnel and equipment are available and for which adequate preparation has been made.
- Promote the status of environmental laboratories, their employees, and the value of services rendered by them.

5.3 QUALITY SYSTEM SUPPORTING DOCUMENTATION

The Laboratory Quality System is communicated through a variety of documents prepared by the laboratory and company management:

- Quality Assurance Manual (QAM) Template
- Quality Assurance Manual – Each laboratory has a lab specific quality assurance manual.
- Corporate SOPs and Policies - Corporate SOPs and Policies are developed for use by all relevant laboratories. They are incorporated into the laboratory's normal SOP distribution, training and tracking system. Corporate SOPs may be general or technical.
- Work Instructions - A subset of procedural steps, tasks or forms associated with an operation of a management system, e.g., checklists, preformatted bench sheets, forms.
- Laboratory SOPs – General and Technical
- Corporate TestAmerica QA/QC Policy Memorandums (refer to Section 3.4).
- Laboratory QA/QC Policy Memorandums (refer to Section 3.4).

5.3.1 Order of Precedence

In the event of a conflict or discrepancy between policies, the order of precedence is as follows:

- TestAmerica QA/QC Policy Memorandum - Corporate
- Laboratory QA/QC Policy Memorandum
- Quality Assurance Manual
- Corporate SOPs and Policies

- Laboratory SOPs and Policies
- Other: Work Instructions (WI), memos, flow charts, etc.

5.4 QA/QC OBJECTIVES FOR THE MEASUREMENT OF DATA

Quality Assurance (QA) and Quality Control (QC) are activities undertaken to achieve the goal of producing data that accurately characterize the sites or materials that have been sampled. Quality Assurance is generally understood to be more comprehensive than Quality Control. Quality Assurance can be defined as the integrated system of activities that ensures that a product or service meets defined standards.

Quality Control is generally understood to be limited to the analyses of samples and to be synonymous with the term *"analytical quality control"*. QC refers to the routine application of statistically based procedures to evaluate and control the accuracy of results from analytical measurements. The QC program includes procedures for estimating and controlling precision and bias and for determining reporting limits.

Request for Proposals (RFPs) and Quality Assurance Project Plans (QAPP) provide a mechanism for the client and the laboratory to discuss the data quality objectives in order to ensure that analytical services closely correspond to client needs. The client is responsible for developing the QAPP. In order to ensure the ability of the laboratory to meet the Data Quality Objectives (DQOs) specified in the QAPP, clients are advised to allow time for the laboratory to review the QAPP before being finalized. Additionally, the laboratory will provide support to the client for developing the sections of the QAPP that concern laboratory activities.

Historically, laboratories have described their QC objectives in terms of precision, accuracy, representativeness, comparability, completeness, selectivity and sensitivity (PARCCSS).

5.4.1 Precision

The laboratory objective for precision is to meet the performance for precision demonstrated for the methods on similar samples and to meet data quality objectives of the EPA and/or other regulatory programs. Precision is defined as the degree of reproducibility of measurements under a given set of analytical conditions (exclusive of field sampling variability). Precision is documented on the basis of replicate analysis, usually duplicate or matrix spike (MS) duplicate samples. The calculation of precision is described in Section 25.

5.4.2 Accuracy

The laboratory objective for accuracy is to meet the performance for accuracy demonstrated for the methods on similar samples and to meet data quality objectives of the EPA and/or other regulatory programs. Accuracy is defined as the degree of bias in a measurement system. Accuracy may be documented through the use of laboratory control samples (LCS) and/or MS. A statement of accuracy is expressed as an interval of acceptance recovery about the mean recovery. The calculation of accuracy is described in Section 25.

5.4.3 Representativeness

The laboratory objective for representativeness is to provide data which is representative of the sampled medium. Representativeness is defined as the degree to which data represent a characteristic of a population or set of samples and is a measurement of both analytical and field sampling precision. The representativeness of the analytical data is a function of the procedures used in procuring and processing the samples. The representativeness can be documented by the relative percent difference between separately procured, but otherwise identical samples or sample aliquots.

The representativeness of the data from the sampling sites depends on both the sampling procedures and the analytical procedures. The laboratory may provide guidance to the client regarding proper sampling and handling methods in order to assure the integrity of the samples.

5.4.4 Comparability

The comparability objective is to provide analytical data for which the accuracy, precision, representativeness and reporting limit statistics are similar to these quality indicators generated by other laboratories for similar samples, and data generated by the laboratory over time.

The comparability objective is documented by inter-laboratory studies carried out by regulatory agencies or carried out for specific projects or contracts, by comparison of periodically generated statements of accuracy, precision and reporting limits with those of other laboratories, and by the degree to which approval from the US EPA or other pertinent regulatory agencies is obtained for any procedure for which significant modifications have been made.

5.4.5 Completeness

The completeness objective for data is 90% (or as specified by a particular project) expressed as the ratio of the valid data to the total data over the course of the project. Data will be considered valid if they are adequate for their intended use. Data usability will be defined in a QAPP, project scope or regulatory requirement. Data validation is the process for reviewing data to determine its usability and completeness. If the completeness objective is not met, actions will be taken internally and with the data user to improve performance. This may take the form of an audit to evaluate the methodology and procedures as possible sources for the difficulty or may result in a recommendation to use a different method.

5.4.6 Selectivity

Selectivity is defined as: The capability of a test method or instrument to respond to a target substance or constituent in the presence of non-target substances. Target analytes are separated from non-target constituents and subsequently identified/detected through one or more of the following, depending on the analytical method: extractions (separation), digestions (separation), inter-element corrections (separation), use of matrix modifiers (separation), specific retention times (separation and identification), confirmations with different columns or detectors (separation and identification), specific wavelengths (identification), specific mass spectra (identification), specific electrodes (separation and identification), etc.

5.4.7 Sensitivity

Sensitivity refers to the amount of analyte necessary to produce a detector response that can be reliably detected (Method Detection Limit) or quantified (Reporting Limit).

5.5 CRITERIA FOR QUALITY INDICATORS

The laboratory prepares a Control Limit Report that summarizes the precision and accuracy acceptability limits for analyses performed at TestAmerica North Canton. This summary includes an effective date, is updated each time new limits are generated, and is located in QC Browser. The charts are stored as hard copies. Unless otherwise noted, limits within these tables are laboratory generated. Some acceptability limits are derived from US EPA methods when they are required. Where US EPA method limits are not required, TestAmerica North Canton has developed limits from evaluation of data from similar matrices. Criteria for development of control limits is contained in Section 25.

5.6 STATISTICAL QUALITY CONTROL

Statistically-derived precision and accuracy limits are required by selected methods (such as SW-846) and programs [such as the Ohio Voluntary Action Plan (VAP)]. TestAmerica North Canton routinely utilizes statistically-derived limits to evaluate method performance and determine when corrective action is appropriate. The analysts are instructed to use the current limits in the laboratory (dated and approved by the Group Leader and QA Manager) and entered into the Laboratory Information Management System (LIMS). The Quality Assurance Department maintains an archive of all limits used within the laboratory. If a method defines the QC limits, the method limits are used.

If a method requires the generation of historical limits, the lab develops such limits from recent data in the QC database of the LIMS following the guidelines described in Section 25. All calculations and limits are documented and dated when approved and effective. On occasion, a client requests contract-specified limits for a specific project.

Surrogate recoveries are determined for a specific time period as defined above. The resulting ranges are entered in LIMS.

Current QC limits are entered and maintained in the LIMS analyte database. As sample results and the related QC are entered into LIMS, the sample QC values are compared with the limits in LIMS to determine if they are within the acceptable range. The analyst then evaluates if the sample needs to be rerun or re-extracted/rerun or if a comment should be added to the report explaining the reason for the QC outlier.

5.6.1 QC Charts

In-house limits for all QC data must be evaluated and compared to the limits published in the methods for applicable matrices. Method limits will be employed until sufficient QC data are acquired. A minimum of 20 to 30 data points are recommended to establish the in-house QC limits. Calculated results of the QC (LCS) samples are evaluated by comparing against control limits (3-sigma).

Control charts are used to develop control limits, trouble-shoot analytical problems, and, in conjunction with the non-conformance system, to monitor for trends. Program-specific data analysis requirements for control charts are followed as required for data generated under those programs. These additional requirements shall be documented in a QAPP or QAS.

5.7 QUALITY SYSTEM METRICS

In addition to the QC parameters discussed above, the entire Quality System is evaluated on a monthly basis through the use of specific metrics (refer to Section 17). These metrics are used to drive continuous improvement in the laboratory's Quality System.

SECTION 6

DOCUMENT CONTROL
(NELAC 5.4.3)

6.1 OVERVIEW

The QA Department is responsible for the control of documents used in the laboratory to ensure that approved, up-to-date documents are in circulation and out-of-date (obsolete) documents are archived or destroyed. The following documents, at a minimum, must be controlled at each laboratory Facility:

- Laboratory Quality Assurance Manual
- Laboratory Standard Operating Procedures (SOP)
- Laboratory Policies
- Work Instructions and Forms
- Corporate Policies and Procedures distributed outside the intranet

The Corporate staff posts Corporate Manuals, SOPs, Policies, Work Instructions, White Papers and Training Materials on the company intranet site. These are collectively termed "Official Documents" and encompass the Policies and Procedures that all facilities are required to employ. These official documents are only considered controlled when they are read on the company intranet site. Printed copies are considered uncontrolled unless the laboratory physically distributes them as controlled documents. A detailed description of the procedure for issuing, authorizing, controlling, distributing, and archiving official documents is found in Corporate SOP CW-Q-S-001, Corporate Document Control and Archiving.

The laboratory QA Department also maintains access to various references and document sources integral to the operation of the laboratory. This includes reference methods and regulations. Instrument manuals (hard or electronic copies) are also maintained by the laboratory.

The laboratory maintains control of records for raw analytical data and supporting records such as audit reports and responses, logbooks, standard logs, training files, MDL studies, Proficiency Testing (PT) studies, certifications and related correspondence, and corrective action reports. Raw analytical data consists of bound logbooks, instrument printouts, any other notes, magnetic media, electronic data and final reports. Discussion on records control is described in Section 15.

The maintenance of purchasing data is discussed in Section 9.

The maintenance of sales and marketing contracts is discussed in Section 7.

6.2 DOCUMENT APPROVAL AND ISSUE

The pertinent elements of a control system for each document include a unique name and number, the number of pages of the item, the effective date, revision number, and the laboratory

name. The QA Department is responsible for the maintenance of the system, and maintains the items electronically on the Laboratory public drive or the QA Department files.

Controlled documents are authorized by the QA Department and other management. In order to develop a new document, a staff member submits an electronic draft to the QA Department for suggestions and approval before use. Upon approval, QA personnel add the identifying version information to the document, and retains the official document on file. The official document is provided as needed to those using it. Controlled documents shall be available at all locations where the operational activity described in the document is performed (may include electronic access). Controlled documents are identified as such and records of their distribution are kept by the QA Department. Document control may be achieved by either electronic or hardcopy distribution.

The QA Department maintains a list of the official versions of controlled documents.

Quality System Policies and Procedures will be reviewed at a minimum of every 24 months, and revised as appropriate. For procedures associated with DoD project work, SOPs and Policies are reviewed every 12 months. Changes to documents occur when a procedural change warrants a revision of the document.

6.3 PROCEDURES FOR DOCUMENT CONTROL POLICY

For changes to the QA Manual, refer to SOPs NC-QA-002 and CW-Q-S-001. Uncontrolled copies must not be used within the laboratory. Previous revisions and back-up data are stored by the QA/QC Department. Electronic copies are stored on the Public server in the QA folder for the applicable revision.

For changes to SOPs, refer to SOP CW-Q-S-002, Writing a Standard Operating Procedure (SOP), and SOP NC-QA-027, Preparation and Management of Standard Operating Procedures.

Forms, worksheets, work instructions, and information are organized by department in the QA office. Electronic versions are kept on a hard drive in the QA department; hard copies are kept in QA files. The procedure for the care of these documents is in SOP NC-QA-027.

6.4 OBSOLETE DOCUMENTS

All invalid or obsolete documents are removed, or otherwise prevented from unintended use. The laboratory has specific procedures as described above to accomplish this. In general, obsolete documents are collected from employees according to distribution lists and are marked obsolete on the cover or destroyed. At least one copy of the obsolete document is archived as described in Section 15.

SECTION 7

REVIEW OF WORK REQUEST

7.1 OVERVIEW

TestAmerica North Canton has established procedures for the review of work requests and contracts, oral or written. The procedures include evaluation of the laboratory's capability and resources to meet the contract's requirements within the requested time period. All requirements, including the methods to be used, must be adequately defined, documented and understood. For many environmental sampling and analysis programs, testing design is site or program specific and does not necessarily "fit" into a standard laboratory service or product. It is TestAmerica's intent to provide both standard and customized environmental laboratory services to our clients.

A thorough review of technical and QC requirements contained in contracts is performed to ensure project success. The appropriateness of requested methods, and the lab's capability to perform them must be established. Projects, proposals and contracts are reviewed for adequately defined requirements and TestAmerica's capability to meet those requirements. Alternate test methods that are capable of meeting the clients' requirements may be proposed by the lab. A review of the lab's capability to analyze non-routine analytes is also part of this review process.

All projects, proposals and contracts are reviewed for the client's requirements in terms of compound lists, test methodology requested, sensitivity (detection and reporting levels), accuracy, and precision requirements (Percent Recovery and RPD). The reviewer ensures that the laboratory's test methods are suitable to achieve these regulatory and client requirements and that the laboratory holds the appropriate certifications and approvals to perform the work. The laboratory and any potential subcontract laboratories must be certified, as required, for all proposed tests.

The laboratory must determine if it has the necessary physical, personnel and information resources to meet the contract, and if the personnel have the expertise needed to perform the testing requested. Each proposal is checked for its impact on the capacity of the laboratory's equipment and personnel. As part of the review, the proposed turnaround time will be checked for feasibility.

Electronic or hard copy deliverable requirements are evaluated against the lab's capacity for production of the documentation.

If the laboratory cannot provide all services but intends to subcontract such services, whether to another TestAmerica facility or to an outside firm, this will be documented and discussed with the client prior to contract approval (refer to Section 8 for Subcontracting Procedures).

The laboratory informs the client of the results of the review if it indicates any potential conflict, deficiency, lack of accreditation, or inability of the lab to complete the work satisfactorily. Any discrepancy between the client's requirements and TestAmerica's capability to meet those requirements is resolved in writing before acceptance of the contract. It is necessary that the

contract be acceptable to both the laboratory and the client. Amendments initiated by the client and/or TestAmerica, are documented in writing.

All contracts, QAPPs, Sampling and Analysis Plans (SAPs), contract amendments, and documented communications become part of the project record.

The review process is repeated when there are amendments to the original contract by the client, and the participating personnel are informed of the changes.

7.2 REVIEW SEQUENCE AND KEY PERSONNEL

Appropriate personnel will review the work request at each stage of evaluation.

For routine projects and other simple tasks, a review by the Project Manager (PM) is considered adequate. The PM confirms that the laboratory has any required certifications, that it can meet the clients' data quality and reporting requirements and that the lab has the capacity to meet the clients turn around needs. It is recommended that, where there is a sales person assigned to the account, an attempt should be made to contact that sales person to inform them of the incoming samples.

For new, complex or large projects, the opportunity is forwarded to a Customer Service Manager (CSM) for review. The CSM contacts the appropriate Sales Executive (National Account Manager, Key Account Executive, Regional Account Executive, and/or Program Manager) to determine which lab will receive the work based on the scope of work and other requirements, including certification, testing methodology, reporting specifications, and available capacity to perform the work. The contract review process is outlined in SOP CA-L-P-002**,** Contract Compliance Policy.

This review encompasses all facets of the operation. The scope of work is distributed to the appropriate personnel, as needed based on scope of contract, to evaluate all of the requirements shown above (not necessarily in the order below):

- Legal & Contracts Director
- Laboratory Customer Service Manager
- Laboratory Operations Manager
- Laboratory and/or Corporate Technical Director
- Laboratory and/or Corporate Information Technology Managers/Directors
- Regional and/or National Account representatives
- Laboratory and/or Corporate Quality Managers
- Laboratory and/or Corporate Environmental Health and Safety Managers/Directors
- The Laboratory Director reviews the formal laboratory quote, and makes final acceptance for their facility.
- Based on the level of discount extended for the project, approval of the General Manager or Sales Director may also be required.

The Customer Service Manager or local Account Executive then submits the final proposal to the client.

In the event that one of the above personnel is not available to review the contract, his or her backup will fulfill the review requirements.

The Legal & Contracts Director (or their designee) maintains copies of all signed contracts. The Laboratory Director also maintains an electronic copy of any contract signed at the local level.

7.3 DOCUMENTATION

Appropriate records are maintained for every contract or work request. All stages of the contract review process are documented and include records of any significant changes.

The contract will be distributed to and maintained by the Corporate Contracts Department and the applicable Account Executive. A copy of the contract will be filed electronically by the Laboratory Director. Quotes will be archived electronically in the laboratory quote module (TALs) or in the public shared drive if an off-TALs quote is submitted.

Records are maintained of pertinent discussions with a client relating to the client's requirements or the results of the work during the period of execution of the contract. The PM keeps email records or a phone log of conversations with the client.

7.3.1 Project-Specific Quality Planning

Communication of contract specific technical and QC criteria is an essential activity in ensuring the success of site specific testing programs. To achieve this goal, TestAmerica assigns a PM to each client. The PM is the first point of contact for the client. It is the PM's responsibility to ensure that project specific technical and QC requirements are effectively evaluated and communicated to the laboratory personnel before and during the project. QA department involvement may be needed to assist in the evaluation of custom QC requirements.

PM's are the direct client contact and they ensure resources are available to meet project requirements. Although PM's do not have direct reports or staff in production, they coordinate opportunities and work with laboratory management and supervisory staff to ensure available resources are sufficient to perform work for the client's project. Project management is positioned between the client and laboratory resources.

Prior to work on a new project, the dissemination of project information and/or project opening meetings may occur to discuss schedules and unique aspects of the project. Items to be discussed may include the project technical profile, turnaround times, holding times, methods, analyte lists, reporting limits, deliverables, sample hazards, or other special requirements. The PM introduces new projects to the laboratory staff through project kick-off meetings or to the supervisory staff during production meetings. These meetings provide direction to the laboratory staff in order to maximize production and client satisfaction, while maintaining quality. In addition, project notes may be associated with each sample batch as a reminder upon sample receipt and analytical processing.

During the project, any change that may occur within an active project is agreed upon between the client/regulatory agency and the PM/laboratory. These changes, e.g., use of a non-standard method or modification of a method, and approvals must be documented prior to implementation. Documentation pertains to any document, e.g., letter, e-mail, variance, contract addendum, which has been signed by both parties.

Such changes are also communicated to the laboratory. Project-specific changes made after samples are in-house are communicated through Change Order forms.

Programmatic and/or method changes are communicated via email transmittal and/or in meetings with the applicable Operations Managers. If the modification includes use of a non-standard method, or significant modification of a method, documentation of the modification is made in the case narrative of the applicable data report(s).

TestAmerica strongly encourages client visits to the laboratory and for formal/informal information sharing session with employees in order to effectively communicate ongoing client needs as well as project specific details for customized testing programs.

SECTION 8

SUBCONTRACTING OF TESTS
(NELAC 5.4.5)

8.1 OVERVIEW

For the purpose of this quality manual, the phrase subcontract laboratory refers to a laboratory external to the corporate network. The phrase "work sharing" refers to internal transfers of samples between company laboratories. The term outsourcing refers to the act of subcontracting tests.

When contracting with our clients, the laboratory makes commitments regarding the services to be performed and the data quality for the results to be generated. When we must outsource testing for our clients because project scope, changes in laboratory capabilities, capacity or unforeseen circumstances, we must be assured that the subcontractors or work sharing laboratories understand the requirements and will meet the same commitments we have made to the client. Refer to the SOP on Subcontracting Procedures (CA-L-S-002) and the Work Sharing Process SOP (CA-C-S-001).

When outsourcing analytical services, the laboratory will assure, to the extent necessary, that the subcontract or work sharing laboratory maintains a program consistent with the requirements of this document, the requirements specified in NELAC/ISO 17025 and/or the client's Quality Assurance Project Plan (QAPP). All QC guidelines specific to the client's analytical program are transmitted to the subcontractor and agreed upon before sending the samples to the subcontract facility. Additionally, work requiring accreditation will be placed with an appropriately accredited laboratory. The laboratory performing the subcontracted work will be identified in the final report, as will non-NELAC accredited work where required.

For DOD projects, the subcontractor laboratories used must have an established and documented laboratory quality system that complies with DoD QSM requirements. The subcontractor laboratories are evaluated following the procedures outlined below and as seen in Figure 8-2. The subcontractor laboratory must receive project-specific approval from the DoD client before any samples are analyzed.

The QSM has five specific requirements for subcontracting:

1. Subcontractor laboratories must have an established laboratory quality system that complies with the QSM.

2. Subcontractor laboratories must be approved by the specific DoD Component laboratory approval process.

3. Subcontractor laboratories must demonstrate the ability to generate acceptable results from the analysis of PT samples, subject to availability, using each applicable method, in the specified matrix, and provide appropriate documentation to the DoD client.

4. Subcontractor laboratories must receive project-specific approval from the DoD client before any samples are analyzed.

5. Subcontractor laboratories are subject to project-specific, on-site assessments by the DoD client or their designated representatives.

Project Managers (PMs) or Customer Service Managers (CSM) for the Export Lab are responsible for obtaining client approval prior to outsourcing any samples. The laboratory will advise the client of a subcontract or work sharing arrangement in writing and when possible approval from the client shall be retained in the project folder.

Note: In addition to the client, some regulating agencies, such as the US Army Corps of Engineers and the USDA, require notification prior to placing such work.

8.2 QUALIFYING AND MONITORING SUBCONTRACTORS

Whenever a PM or Customer Service Manager (CSM) becomes aware of a client requirement or laboratory need where samples must be outsourced to another laboratory, the other laboratory(s) shall be selected based on the following:

- The first priority is to attempt to place the work in a qualified network laboratory
- Firms specified by the client for the task (Documentation that a subcontractor was designated by the client must be maintained with the project file. This documentation can be as simple as placing a copy of an e-mail from the client in the project folder)
- Firms listed as pre-qualified and currently under a subcontract with the company (in J.D.Edwards). A listing of all approved subcontracting laboratories and supporting documentation is available on the TestAmerica intranet site. Verify necessary accreditation for the requested tests prior to sending samples.
- Firms identified in accordance with the company's Small Business Subcontracting program as small, women-owned, veteran-owned and/or minority-owned businesses
- NELAC or A2LA-accredited laboratories
- In addition, the firm must hold the appropriate certification to perform the work required

All intra-company laboratories are pre-qualified for work sharing, provided they hold the appropriate accreditations, can adhere to the project/program requirements, and the client approved sending samples to that laboratory. The client must provide acknowledgement that the samples can be sent to that facility (an e-mail is sufficient documentation or if acknowledgement is verbal, the date, time, and name of person providing acknowledgement must be documented). The originating laboratory is responsible for communicating all technical, quality, and deliverable requirements as well as other contract needs. Refer to SOP CA-C-S-001, Work Sharing Process.

When the potential subcontract laboratory has not been previously approved, CSMs or PMs may nominate a laboratory as a subcontractor based on need. The decision to nominate a laboratory must be approved by the Laboratory Director/Manager. The Laboratory Director/Manager requests that the QA Manager begin the process of approving the subcontract

laboratory. The client must provide acknowledgement that the samples can be sent to that facility. (An e-mail is sufficient documentation; or if acknowledgement is verbal, the date, time, and name of person providing acknowledgement must be documented.)

8.2.1 The QA Manager must ensure that the Subcontracting Approval Form (Figure 8-2) has been completed and have supporting documentation on file prior to initiation of any work. A letter or e-mail is sent to the lab requesting the following information:

8.2.1.1 If a lab is NELAC or A2LA-accredited:

8.2.1.1.1 Copy of necessary certifications verifying the required approvals are current. Ensure all needed analytes are included; some may not be accreditable (if so, document). Certificate and scope of international Standard accreditation are required, when applicable.

8.2.1.1.2 Insurance Certificate. This is required by the TestAmerica Chief Financial Officer

8.2.1.1.3 USDA soil permit, if available

8.2.1.2 For laboratories accredited by other agencies with an auditing program

8.2.1.2.1 Copy of necessary certifications verifying that the required approvals are current. Ensure all needed analytes are included; some may not be accreditable (if so, document). Certificate and scope of International Standard accreditation are required, when applicable.

8.2.1.2.2 Insurance Certificate. This is required by the TestAmerica Chief Financial Officer

8.2.1.2.3 USDA soil permit, if available**

8.2.1.2.4 Description of Ethics and Data Integrity Plan

8.2.1.2.5 The most recent two sets of full proficiency testing (PT) results relevant to the analyses of interest and any associated corrective action

8.2.1.2.6 State Audit with Corrective Action Response

8.2.1.2.7 Example final report to confirm format is compliant and provides the necessary information. (Minimally, it must be determined the Batch QC results are included in the laboratory reports, and data is appropriately qualified.)

8.2.1.2.8 A copy of raw data associated with the first project is requested for internal review. The raw data is reviewed by the QA Manager and the PM to ensure that the results meet the client's needs. If the QA Manager is unfamiliar with the analysis being performed, notify Corporate QA for guidance on the review. (It may need to be sent elsewhere for evaluation.) This requirement can be skipped if an on-site visit of the laboratory is planned. (This requirement is effective as of the effective date of this section. Laboratories worked with previously—minimum of six months—are

grandfathered.)

8.2.1.2.9 DoD work includes additional requirements as described in Section 8.1 above.

8.2.1.3 For laboratories performing tests that are unaccredited or accredited by an agency without an audit program:

8.2.1.3.1 A copy of their Quality Assurance Manual (controlled, if possible). Ensure data quality limits for relevant methods are acceptable and that training procedures are adequate.

8.2.1.3.2 A copy of necessary certifications (if available) verifying the required approvals are current. Ensure all needed analytes are included. Some may not be accreditable (if so, document). Certificate and scope of international Standard accreditation are required, when applicable.

8.2.1.3.3 Insurance Certificate. This is required by the Test America Chief Financial Officer.

8.2.1.3.4 USDA soil permit, if available**.

8.2.1.3.5 Evidence of a current SOP per method. A copy of the first page and signature page of the SOP is acceptable. A Table of Contents including effective dates may also be acceptable. The SOP can be examined if an on-site audit is performed.

8.2.1.3.6 Description of Ethics and Data Integrity Plan

8.2.1.3.7 The most recent two sets of full proficieincy teting (PT) results relevant to the analyses of interest and any associated corrective action.

8.2.1.3.8 Example final report to confirm format is compliant and provides the necessary information. (Minimally, it msut be determined the Batch QC results are included in the laboratory reports, and data is appropriately qualified.)

8.2.1.3.9 Statement of Qualification (SOQ) or summary list of Technical Staff and Qualifications – position, education, and years of experience.

8.2.1.3.10 DoD work includes additional requirements as described in Section 8.1 above.

**USDA permit is required if soils less than three feet deep from New York, North Carolina, South Carolina, Georgia, Florida, Tennessee, Alabama, Mississippi, Louisiana, Arkansas, Texas, Oklahoma, New Mexico, Arizona, California, Hawaii, or outside the continental U.S. are to be analyzed. These samples require special shipping measures (check with the EHS Department). It may be necessary to heat-treat the samples before shipping if the subcontract laboratory does not have a USDA permit; however, some analytes/tests may be irrelevant after heat treatment.

8.2.1.3.11 A copy of raw data associated with the first project is requested for internal review. The raw data is reviewed by the QA Manager and the PM to ensure that the results meet the client's needs. If the QA Manager is unfamiliar with the analysis being performed, notify Corporate QA for guidance on the review. (It may need to be sent elsewhere for evaluation.) This requirement can be skipped if an on-site visit of the laboratory is planned. (This requirement is effective as of the effective date of this section. Laboratories worked with previously—minimum of six months—are grandfathered.)

8.2.2 Once the information is received by the QA Manager, it is evaluated for acceptability and forwarded to Corporate Contracts for formal contracting with the laboratory. They will add the lab to the approved list on the intranet site, along with the associated documentation and notify the Finance Group for J.D.Edwards.

8.2.3 The client will assume responsibility for the quality of the data generated from the use of a subcontarctor they have requested the lab to use. The qualified subcontractors on the intranet site are to meet minimal standards. The company does not certify laboratories. The subcontractor is on our approved list, and can only be recommended to the extent that we would use them.

8.2.4 The status and performance of qualified subcontractors will be monitored periodically by the Corporate Contract Department. Any problems identified will be brought to Corporate QA attention.

- Complaints shall be investigated. Documentation of the complaint, investigation, and corrective action will be maintained in the subcontractor file on the intranet site. Complaints must be posted using the Vendor Performance Report (Form CW-F-WI-009)**.**
- Information must be updated on the intranet when new information is received from the subcontracted laboratories.
- Subcontractors in good standing will be retained on the intranet listing. The QA Manager will notify all network laboratories and Corporate QA and Corporate Contracts if any laboratory requires removal from the intranet site. This notification will be posted on the intranet site and e-mailed to all Lab Directors/Managers, QA Managers, and Sales Directors.

8.3 OVERSIGHT AND REPORTING

The CSM or PM must request that the selected subcontractor be presented with a subcontract, if one is not already executed between the laboratory and the subcontractor. The subcontract must include terms which flow down the requirements of our clients, either in the subcontract itself or through the mechanism of work orders relating to individual projects. A standard subcontract and the Lab Subcontractor Vendor Package (posted on the intranet) can be used to accomplish this, and the Legal & Contracts Director can tailor the document or assist with negotiations, if needed. The PM or CSM responsible for the project must advise and obtain client consent to the subcontract as appropriate, and provide the scope of work to ensure that the proper requirements are made a part of the subcontract and are made known to the subcontractor.

Prior to sending samples to the subcontracted laboratory, the PM confirms their certification status to determine if it's current and scope-inclusive. The information is documented on a Subcontracted Sample Form (Figure 8-3) and the form is retained in the project folder. For network laboratories, certifications can be viewed on the company website.

The Sample Control Department is responsible for ensuring compliance with QA requirements and applicable shipping regulations when shipping samples to a subcontracted laboratory.

All subcontracted samples must be accompanied by a Chain of Custody (COC). A copy of the original COC sent by the client must be included with all samples subbed within the network.

The PM will communicate with the subcontracted laboratory to monitor the status of the analyses, facilitate successful execution of the work and ensure the timeliness and completeness of the analytical report.

Non-NELAC accredited work must be identified in the subcontractor's report as appropriate. If NELAC accreditation is not required, the report does not need to include this information.

Reports submitted from subcontractor laboratories are not altered and are included in their original form in the final project report. This clearly identifies the data as being produced by a subcontractor facility. If subcontract laboratory data is incorporated into the laboratory EDD, i.e., imported, the report must explicitly indicate the specific lab that produced the data and identify the specific methods and samples.

Note: The results submitted by a network work sharing laboratory may be transferred electronically and the results reported by the network work sharing lab are identified on the final report. The report must explicitly indicate which lab produced the data for which methods and samples. The final report must include a copy of the completed COC for all work sharing reports.

8.4 CONTINGENCY PLANNING

The Laboratory Director/Manager may waive the full qualification of a subcontractor process temporarily to meet emergency needs. In the event this provision is utilized, Corporate QA must be informed, and the QA Manager will be required to verify adequacy of proficiency scores and certifications. The laboratory must also request a copy of the raw data to support the analytical results for the first project submitted to the subcontract laboratory unless the laboratory has NELAC accreditation. The raw data is reviewed by the QA Manager and the PM to ensure that the results meet the client's needs. The QA Manager will request full documentation and qualify the subcontractor under the provisions above. The approval process should be completed within 30 calendar days of subcontracting.

Figure 8-1.
Example - Client-Approved Subcontractor Form

Client Information:

Client Name & Account Number:_____

Client Contact: _____

Client Address: _____
_____

Project Information: **(Please choose all applicable.)**

- **Certification required:** ◻ **State** ◻ **NELAC** ◻ **A2LA** ◻ **Method**___
  ◻ **Target compound**_____ ◻ **Other**_____ ◻ **N/A**
- **Required Turn around time (method provisional)**_____

Subcontractor's Information:

Subcontractor's Name: _____

Subcontractor's Contact: _____

Subcontractor's Email: _____

Subcontractor's Address: _____
_____

Subcontractor's Phone Number: _____

Analytical Test/Compound/Method to be subcontracted: _____

Certification Statement:

I hereby give ***[Insert Lab Name]*** permission to use the above noted subcontractor for the above noted testing procedures/methods. I realize that the above subcontractor will be held liable for the validity of the above mentioned testing procedures/methods. All subcontractors shall meet the requirements as spelled out in project information and will follow all analytical holding times and turn around times for analytical reports. The subcontract laboratory, and not TestAmerica, will be held liable for liquidated damages for delays in subcontracted analytical reports and/or electronic data deliverables.

_____
Client Signature **Date**

Figure 8-2.
Example - Subcontracting Laboratory Approval Form (Initial / Renewal)

SUBCONTRACTING LABORATORY APPROVAL

Reference: Section 8 – Quality Assurance Manual

Date: _____
Laboratory: _____

Address: _____
_____

Contact and e-mail address: _____
Phone: Direct _____ Fax _____

Requested Item[3]	Date Received	Reviewed/ Accepted	Date
1. QA Manual[3]			
2. Copy of State Certification[1]			
3. State Audit with Corrective Action Response (or NELAC or A2LA Audit)[3]			
4. Most Recent (and relevant) 2 Sets of WP/WS Reports with Corrective Action Response[1,3]			
5. SOQ or Summary list of Technical Staff and Qualifications [3]			
6. SOPs for Methods to Be Loadshifted[2,3]			
7. USDA Soil Permit			
8. Insurance Certificate			
9. Sample Report[3]			
10. For DoD Work: Statement that Lab quality system complies with QSM			
11. For DoD Work: Approved by specific DoD Component laboratory approval process			
11. Description of Ethics Program[3]			

1 - Required when emergency procedures are implemented.
2 - Some labs may not submit copies due to internal policies. In these cases, a copy of the first page and signature page of the SOP is acceptable. This requirement may also be fulfilled by supplying a table of SOPs with effective dates.
3 – If the laboratory has NELAC accreditation, Item numbers 4 through 10 are not required.

On Site Audit Planned: YES NO If yes, Date Completed: _____ By Whom: _____

Comments:

Lab Acceptable for Subcontracting Work: YES NO Limitations: _____

QA Manager: _____ Date: _____
(Printed Name)

☐ Forwarded to Contract Coordinator by: _____ Date: _____

SECTION 9

PURCHASING SERVICES AND SUPPLIES
(NELAC 5.4.6)

9.1 OVERVIEW

Evaluation and selection of suppliers and vendors is performed, in part, on the basis of the quality of their products, their ability to meet the demand for their products on a continuous and short term basis, the overall quality of their services, their past history, and competitive pricing. This is achieved through evaluation of objective evidence of quality furnished by the supplier, which can include certificates of analysis, recommendations, and proof of historical compliance with similar programs for other clients. To ensure that quality critical consumables and equipment conform to specified requirements, all purchases from specific vendors are approved by a member of the supervisory or management staff.

Capital expenditures are made in accordance with the Controlled Purchases Procedure, CW-F-S-004. Only one quote is required where the item being purchased is a sole source product, Examples of sole source capital expenditures are laboratory test equipment, client specified purchases and building leases. A minimum of two quotes is required where the opportunity exists to source from more than one vendor. All documentation related to the purchase of capital items will be maintained in the individual CapEx files located in Corporate Purchasing. Data will be held in accordance with the record retention policy.

TestAmerica will enter into formal contracts with vendors when it is advantageous to do so. Contracts will be signed in accordance with the Authorization Matrix Policy, CW-F-P-002. Examples of items that are purchased through vendor contracts are laboratory instruments, consumables, copiers and office supplies. Request for Proposals (RFP's) will be issued where more information is required from the potential vendors than just price. RFP's allow TestAmerica to determine if a vendor is capable of meeting requirements such as supplying all of the TestAmerica facilities, meeting required quality standards and adhering to necessary ethical and environmental standards. The RFP process also allows potential vendors to outline any additional capabilities they may offer.

Non-capital expenditure items are purchased through the requisition and approval process in JD Edwards or through other TestAmerica authorized methods (approved web-sites, purchasing cards). Labs have the ability to select from the approved vendors in JD Edwards.

9.2 GLASSWARE

Glassware used for volumetric measurements must be Class A or verified for accuracy according to laboratory procedure. Pyrex (or equivalent) glass should be used where possible. For safety purposes, thick-wall glassware should be used where available.

9.3 REAGENTS, STANDARDS & SUPPLIES

Chemical reagents, solvents, glassware, and general supplies are ordered as needed to maintain sufficient quantities on hand. Purchasing guidelines for equipment and reagents must

meet with the requirements of the specific method and testing procedures for which they are being purchased. Solvents and acids are pre-tested in accordance with Corporate SOP on Solvent & Acid Lot Testing & Approval, SOP CA-Q-S-001.

9.3.1 Purchasing

The nature of the analytical laboratory demands that all material used in any of the procedures is of a known quality. The wide variety of materials and reagents available makes it advisable to specify recommendations for the name, brand, and grade of materials to be used in any determination. This information is contained in the method SOP.

9.3.2 Receiving

It is the responsibility of the Warehouse Manager to receive the shipment. It is the responsibility of the analyst who ordered the materials to date the material when received. Once the ordered reagents or materials are received, the analyst compares the information on the label or packaging to the original order to ensure that the purchase meets the quality level specified. Material Safety Data Sheets (MSDSs) are kept on a backup disc located in the Wet Chemistry bullpen and online through the Company's intranet website. Anyone may review these for relevant information on the safe handling and emergency precautions of on-site chemicals.

9.3.3 Specifications

There are many different grades of analytical reagents available to the analyst. All methods in use in the laboratory specify the grade of reagent that must be used in the procedure. If the quality of the reagent is not specified, it may be assumed that it is not significant in that procedure and, therefore, any grade reagent may be used. It is the responsibility of the analyst to check the procedure carefully for the suitability of grade of reagent.

Chemicals must not be used past the manufacturer's expiration date and must not be used past the expiration time noted in a method SOP. If dates are not provided, the laboratory may contact the manufacturer to determine an expiration date.

The laboratory assumes a five year expiration date on inorganic dry chemicals unless noted otherwise by the manufacturer or by the reference source method.

- An expiration date cannot be extended if the dry chemical is discolored or appears otherwise physically degraded, the dry chemical must be discarded.

- Expiration dates can be extended if the dry chemical is found to be satisfactory based on acceptable performance of quality control samples (Continuing Calibration Verification (CCV), Blanks, Laboratory Control Sample (LCS), etc.).

- If the dry chemical is used for the preparation of standards, the expiration dates can be extended 6 months if the dry chemical is compared to an unexpired independent source in performing the method and the performance of the dry chemical is found to be satisfactory. The comparison must show that the dry chemical meets CCV limits. The comparison studies are maintained in the Standard Logbook in each laboratory group.

Wherever possible, standards must be traceable to national or international standards of measurement or to national or international reference materials. Records to that effect are available to the user.

Compressed gases in use are checked for pressure and secure positioning daily. The minimum total pressure must be 500 psig or the tank must be replaced. The quality of the gases must meet method or manufacturer specification or be of a grade that does not cause any analytical interference.

Water used in the preparation of standards or reagents must have a conductivity of less than 1 mmho/cm at 25°C. The conductivity is checked and recorded daily. If the water's conductivity is less than the specified limit, the Operations Manager must be notified immediately in order to notify all departments, decide on cessation (based on intended use) of activities, and make arrangements for correction.

The laboratory may purchase reagent grade (or other similar quality) for use in the laboratory. This water must be certified "clean" by the supplier for all target analytes or otherwise verified by the laboratory prior to use. This verification is documented.

Standard lots are verified before first time use if the laboratory switches manufacturers or has historically had a problem with the type of standard.

Purchased VOA vials must be certified clean and the certificates must be maintained. If uncertified VOA vials are purchased, all lots must be verified clean prior to use. This verification must be maintained.

9.3.4 Storage

Reagent and chemical storage is important from the aspects of both integrity and safety. Light-sensitive reagents may be stored in brown-glass containers. Table 9-1 details specific storage instructions for reagents and chemicals. Section 22 discusses conditions for standard storage.

9.4 PURCHASE OF EQUIPMENT/INSTRUMENTS/SOFTWARE

When a new piece of equipment is needed, either for additional capacity or for replacing inoperable equipment, the analyst or supervisor makes a supply request to the Operations Manager and/or the Laboratory Director/Manager. If they agree with the request the procedures outlined in Policy CA-T-P-001, Qualified Products List, are followed. A decision is made as to which piece of equipment can best satisfy the requirements. The appropriate written requests are completed, and Purchasing places the order.

Upon receipt of a new or used piece of equipment, it is given a short name, such as HP-20, added to the equipment list described in Section 21 that is maintained by the QA Department, and I.T. must be notified so it can be linked for backups. Its capability is assessed to determine if it is adequate or not for the specific application. For instruments, a calibration curve is generated followed by MDLs, Demonstration of Capabilities (DOCs), and other relevant criteria (see Section 20). For software, its operation must be deemed reliable and evidence of

instrument verification must be retained by the IT Department or QA Department as specified in the laboratory's procedure for software verification. Software certificates supplied by the vendors are filed with the LIMS Administrator. The manufacturer's operation manual is retained at the bench.

9.5 SERVICES

Service to analytical instruments (except analytical balances) is performed on an as needed basis. Routine preventative maintenance is discussed in Section 21. The need for service is determined by analysts and/or Department Managers. The service providers that perform the services are approved by the Department Managers or Operations Manager.

9.6 SUPPLIERS

TestAmerica selects vendors through a competitive proposal / bid process, strategic business alliances or negotiated vendor partnerships (contracts). The level of control used in the selection process is dependent on the anticipated spend and the potential impact on TestAmerica business. Vendors that provide test and measuring equipment, solvents, standards, certified containers, instrument related service contracts or subcontract laboratory services shall be subject to more rigorous controls than vendors that provide off-the-shelf items of defined quality that meet the end use requirements. The JD Edwards purchasing system includes all suppliers /vendors that have been approved for use.

Evaluation of suppliers is accomplished by ensuring the supplier ships the product or material ordered and that the material is of the appropriate quality. This is documented by signing off on packing slips or other supply receipt documents. The purchasing documents contain the data that adequately describe the services and supplies ordered.

Any issues of vendor performance are to be reported immediately by the laboratory staff to the Corporate Purchasing Group by completing a Vendor Performance Report (CW-F-WI-009).

The Corporate Purchasing Group will work through the appropriate channels to gather the information required to clearly identify the problem and will contact the vendor to report the problem and to make any necessary arrangements for exchange, return authorization, credit, etc.

As deemed appropriate, the Vendor Performance Reports will be summarized and reviewed to determine corrective action necessary, or service improvements required by vendors

The laboratory has access to a listing of all approved suppliers of critical consumables, supplies and services. This information is provided through the JD Edwards purchasing system.

9.6.1 New Vendor Procedure

TestAmerica employees who wish to request the addition of a new vendor must complete a J.D. Edwards Vendor Add Request Form (CW-F-WI-007 – refer to Figure 9-2).

New vendors are evaluated based upon criteria appropriate to the products or services provided as well as their ability to provide those products and services at a competitive cost. Vendors are also evaluated to determine if there are ethical reasons or potential conflicts of interest with TestAmerica employees that would make it prohibitive to do business with them as well as their financial stability. The QA Department and/or the Laboratory Director are consulted with vendor and product selection that have an impact on quality.

Table 9-1.

Storage of Reagents and Chemicals

Chemical	Storage Requirements
Concentrated Acids and Bases	Stored in the original containers at room temperature. All organic acids must be stored separately from inorganic acids. Acids should not be stored with bases.
Bulk Dry Chemicals	Stored in the original containers at room temperature. All organic acids must be stored separately from inorganic acids. Acids should not be stored with bases.
Working Solutions containing Organic Compounds	Stored as per method recommendation/ requirement. They are generally stored refrigerated at 4°C± 2°C.
Working Solutions containing only Inorganics	Stored at room temperature; refrigeration is optional.
Flammable Solvents	Stored in solvent cabinets at room temperature.
Non-Flammable Solvents	Stored separately from the flammable solvents in cabinets at room temperature.

Figure 9-2.
Example – JD Edwards Vendor Add Request Form

TestAmerica
THE LEADER IN ENVIRONMENTAL TESTING

JD Edwards Vendor Add Request Form

Vendor name:	Lab location and individual making request:
Vendor address (remit to):	Vendor phone:
Vendor address (remit to):	Vendor fax:
Contact name:	Product / service provided:

Reason for Vendor Addition: Check all reasons that apply

☐ Cost Reduction	Estimated Annual Savings $
☐ Replace Current Vendor	Reason?
	Vendor being Replaced?
☐ New Product / Service	Describe:
☐ ISO Approved (Required for Aerotech / P&K only)	

Small Business:

Does this vendor help us to meet our small business objectives: _____

If yes, which category: _____

Personal and Ethical Considerations:

Is there any personal conflict of interest with a TestAmerica employee and the vendor listed above? _____
_____

Have ethical considerations been taken into account in your evaluation of this vendor?_____
_____

Can this product be sourced from another TestAmerica facility?_____

Please complete form and email to NCPurchasing@testamericainc.com or fax to (330) 966-9275.

I approve the addition of this vendor:

_____ _____

Purchasing Manager - Patrick Eckman Corporate Controller - Leslie Bowers

Form No. CW-F-WI-007

SECTION 10

SERVICE TO THE CLIENT
(NELAC 5.4.7)

10.1 OVERVIEW

TestAmerica North Canton cooperates with clients and their representatives to monitor the laboratory's performance in relation to work performed for the client. It is the laboratory's goal to meet all client requirements in addition to statutory and regulatory requirements discussed in Section 5. The laboratory has procedures to ensure confidentiality to clients (Sections 16 and 26).

Note: ISO 17025/NELAC 2003 states that a laboratory "shall afford clients or their representatives cooperation to clarify the client's request". This topic is discussed in Section 7.

10.2 SPECIAL SERVICES

The laboratory's standard procedures for reporting data are described in Section 26. When requested the following special services are provided:

- The laboratory will provide the client or the client's representative reasonable access to the relevant areas of the laboratory for the witnessing of tests performed for the client.
- The laboratory will work with client-specified third party data validators as specified in the client's contract.
- The laboratory will provide the client with all requested information pertaining to the analysis of their samples. An additional charge may apply for additional data/information that was not requested prior to the time of sample analysis or previously agreed upon.

10.3 CLIENT COMMUNICATION

Customer Service Managers (CSMs) and Project Managers (PMs) are an important communication link to the clients. The lab shall inform its clients of any delays in project completion as well as any non-conformances in either sample receipt (refer to Section 24) or sample analysis. Project Management will maintain ongoing client communication throughout the entire client project.

A Technical Director, Operation Manager, or Lab Supervisors are available to discuss any technical questions or concerns that the client may have.

10.4 REPORTING

The laboratory will work with the client to produce any special communication reports required by the contract.

10.5 CLIENT SURVEYS

The laboratory assesses both positive and negative client feedback. The results are used to improve overall laboratory quality and client service.

TestAmerica Sales and Marketing teams periodically develop lab and client-specific surveys to assess client satisfaction.

SECTION 11

COMPLAINTS
(NELAC 5.4.8)

11.1 OVERVIEW

TestAmerica North Canton believes that effective client complaint handling processes have important business and strategic value. Listening to and documenting client concerns captures 'client knowledge' that helps to continually improve processes and improving client satisfaction. An effective client complaint handling process also provides assurance to the data user that the laboratory will stand behind its data, service obligations and products.

A client complaint is any expression of dissatisfaction with any aspect of our business services, communications, responsiveness, data, reports, invoicing and other functions expressed by any party, whether received verbally or in written form. Client inquiries, complaints or noted discrepancies are documented, communicated to management, and addressed promptly and thoroughly.

The laboratory has procedures for dealing with both external and internal complaints.

The nature of the complaint is identified, documented and investigated, and an appropriate action is determined and taken. In cases where a client complaint indicates that an established policy or procedure was not followed, the QA Department must evaluate whether a special audit must be conducted to assist in resolving the issue. A written confirmation or letter to the client, outlining the issue and response taken is recommended as part of the overall action taken.

The process of complaint resolution and documentation utilizes the procedures outlined in Section 13 (Corrective Actions) and is documented following SOPs CORP-QA-0010, Nonconformance and Corrective Action System, and S-C-002, Complaint Handling and Service Recovery. It is the laboratory's goal to provide a satisfactory resolution to complaints in a timely and professional manner.

11.2 EXTERNAL COMPLAINTS

An employee that receives a complaint initiates the complaint resolution process and the documentation of the complaint.

Complaints fall into two categories: correctable and non-correctable. An example of a correctable complaint would be one where a report re-issue would resolve the complaint. An example of a non-correctable complaint would be one where a client complains that their data was repeatedly late. Non-correctable complaints should be reviewed for preventive action measures to reduce the likelihood of future occurrence and mitigation of client impact.

The general steps in the complaint handling process are:

- Receiving Complaints
- Complaint Investigation and Service Recovery

- Process Improvement

The laboratory shall inform the initiator of the complaint of the results of the investigation and the corrective action taken, if any.

11.3 INTERNAL COMPLAINTS

Internal complaints include, but are not limited to: errors and non-conformances, training issues, internal audit findings, and deviations from methods. Corrective actions may be initiated by any staff member who observes a nonconformance and shall follow the procedures outlined in Section 13. In addition, Corporate Management, Sales and Marketing, and Information Technology (IT) may initiate a complaint by contacting the laboratory or through the corrective action system described in Section 13.

11.4 MANAGEMENT REVIEW

The number and nature of client complaints is reported by the QA Manager to the laboratory and QA Director in the QA Monthly report. Monitoring and addressing the overall level and nature of client complaints and the effectiveness of the solutions is part of the Annual Management Review (Section 17)

SECTION 12

CONTROL OF NON-CONFORMING WORK
(NELAC 5.4.9)

12.1 OVERVIEW

When data discrepancies are discovered or deviations and departures from laboratory standard procedures, policies and/or client requests have occurred, corrective action is taken immediately. First, the laboratory evaluates the significance of the nonconforming work. Then, a corrective action plan is initiated based on the outcome of the evaluation. If it is determined that the nonconforming work is an isolated incident, the plan could be as simple as adding a qualifier to the final results and/or making a notation in the case narrative. If it is determined that the nonconforming work is a systematic or improper practices issue, the corrective action plan could include a more in depth investigation and a possible suspension of an analytical method. In all cases, the actions taken are documented using the laboratory's corrective action system (refer to Section 13).

Due to the frequently unique nature of environmental samples, sometimes departures from documented policies and procedures are needed. Refer to SOP CORP-QA-0010, Nonconformance and Corrective Action System, for details of the nonconformance process.

12.2 RESPONSIBILITIES AND AUTHORITIES

SOP CA-L-S-001, Internal Investigation of Potential Data Discrepancies and Determination for Data Recall, outlines the general procedures for the reporting and investigation of data discrepancies and alleged incidents of misconduct or violations of the company's data integrity policies as well as the policies and procedures related to the determination of the potential need to recall data.

Under certain circumstances the Laboratory Director/Manager, Operations Manager, Project Manager, or a member of the QA team may exceptionally authorize departures from documented procedures or policies. The departures may be a result of procedural changes due to the nature of the sample; a one-time procedure for a client; QC failures with insufficient sample to reanalyze, etc. In most cases, the client will be informed of the departure prior to the reporting of the data. Any departures must be well documented using the laboratory's corrective action procedures described in Section 13. This information may also need to be documented in logbooks and/or data review as appropriate. Any impacted data must be referenced in a case narrative and/or flagged with an appropriate data qualifier.

Any misrepresentation or possible misrepresentation of analytical data discovered by any laboratory staff member must be reported to facility senior laboratory management within 24 hours. The Senior Management staff is compromised of the Laboratory Director, QA Manager, Customer Service Manager, Operations Manager, I.T. Manager, H.R. Manager, and Technical Director. The reporting of issues involving alleged violations of the company's Data Integrity or Manual Integration procedures must be conveyed to an Ethics and Compliance Officer (ECO) and Quality Director within 24 hours.

Whether an inaccurate result was reported due to calculation or quantitation errors, data entry errors, improper practices, or failure to follow SOPs, the data must be evaluated to determine the possible effect.

The Laboratory Director/Manager, QA Manager, ECOs, COOs (East and West), General Managers and the Quality Directors (East and West) have the authority and responsibility to halt work, withhold final reports, or suspend an analysis for due cause as well as authorize the resumption of work.

12.3 EVALUATION OF SIGNIFICANCE AND ACTIONS TAKEN

For each nonconforming issue reported, an evaluation of its significance and the level of management involvement needed is made. This includes reviewing its impact on the final data, whether or not it is an isolated or systematic issue, and how it relates to any special client requirements.

SOP CA-L-S-001 distinguishes between situations when it would be appropriate for the laboratory QA Manager and Laboratory Director/Manager (or his/her designee) to make the decision on the need for client notification (written or verbal) and data recall (report revision) and when the decision must be made with the assistance of the ECOs and Corporate Management. Laboratory level decisions are documented and approved using the laboratory's standard nonconformance/corrective action reporting (Section 13) in lieu of the data recall determination form contained in SOP CA-L-S-001.

12.4 PREVENTION OF NONCONFORMING WORK

If it is determined that the nonconforming work could recur, further corrective actions must be made following the laboratory's corrective action system (Section 13).

On a monthly basis, the QA Department evaluates non-conformances to determine if any nonconforming work has been repeated multiple times. If so, the laboratory's corrective action process may be followed.

12.5 METHOD SUSPENSION/RESTRICTION (STOP WORK PROCEDURES)

In some cases it may be necessary to suspend/restrict the use of a method or target compound which constitutes significant risk and/or liability to the laboratory. Suspension/restriction procedures can be initiated by any of the persons noted in Section 12.2, Paragraph 5 above.

Prior to suspension/restriction, confidentiality will be respected, and the problem and the required corrective and preventive action will be stated in writing and presented to the Laboratory Director/Manager.

The Laboratory Director/Manager shall arrange for the appropriate personnel to meet with the QA Manager as needed. This meeting shall be held to confirm that there is a problem, that suspension/restriction of the method is required and will be concluded with a discussion of the steps necessary to bring the method/target or test fully back on line. In some cases that may not

be necessary if all appropriate personnel have already agreed there is a problem and there is agreement on the steps needed to bring the method, target or test fully back on line.

The QA Manager will also initiate a corrective action report as described in Section 13 if one has not already been started. A copy of any meeting notes and agreed upon steps must be faxed or e-mailed by the laboratory to the appropriate General Manager and member of Corporate QA. This fax/e-mail acts as notification of the incident.

After suspension/restriction, the lab will hold all reports to clients pending review. No faxing, mailing or distributing through electronic means may occur. The report must not be posted for viewing on the Internet. It is the responsibility of the Laboratory Director/Manager to hold all reporting and to notify all relevant laboratory personnel regarding the suspension/restriction, i.e., Project Management, Log-in, etc. Clients will NOT generally be notified at this time. Analysis may proceed in some instances depending on the non-conformance issue.

Within 72 hours, the QA Manager will determine if compliance is now met and reports can be released, OR determine the plan of action to bring work into compliance, and release work. A team, with all principals involved (Laboratory Director, Technical Director, QA Manager, Supervisor) can devise a start-up plan to cover all steps from client notification through compliance and release of reports. Project Management, Director of Client Services, and Director of Sales and Marketing should be notified if clients must be notified or if the suspension/restriction affects the laboratory's ability to accept work. The QA Manager must approve start-up or elimination of any restrictions after all corrective action is complete. This approval is given by final signature on the completed corrective action report as described in Section 13.

Company Confidential & Proprietary

SECTION 13

CORRECTIVE ACTION
(NELAC 5.4.10)

13.1 OVERVIEW

A major component of TestAmerica's Quality Assurance (QA) Program is the problem investigation and feedback mechanism designed to keep the laboratory staff informed on quality related issues and to provide insight to problem resolution. When nonconforming work or departures from policies and procedures in the quality system or technical operations are identified, the corrective action procedure provides a systematic approach to assess the issues, restore the laboratory's system integrity, and prevent reoccurrence. Corrective actions are documented using Nonconformance Memos (NCM).

13.2 DEFINITIONS

- **Correction***:* Actions necessary to correct or repair analysis specific non-conformances. The acceptance criteria for method specific QC and protocols as well as the associated corrective actions are contained in the method-specific SOPs. The analyst will most frequently be the one to identify the need for this action as a result of calibration checks and QC sample analysis**.** No significant action is taken to change behavior, process or procedure.

- **Corrective Action***:* The action taken is not only a correction made to the immediate event, but a change in process, procedure or behavior that is required to eliminate the causes of an existing nonconformity, defect, or other undesirable situation in order to prevent recurrence.

13.3 GENERAL

Problems within the quality system or within analytical operations may be discovered in a variety of ways, such as QC sample failures, internal or external audits, proficiency testing (PT) performance, client complaints, staff observation, etc.

The purpose of a corrective action system is to:

- Identify non-conformance events and assign responsibility for investigation.
- Resolve non-conformance events and assign responsibility for any required corrective action.
- Identify Systematic Problems before they become serious.
- Identify and track Client complaints and provide resolution (see more on client complaints in Section 11).

13.3.1 Non-Conformance Memo (NCM) - is used to document the following types of corrective actions:

- Deviations from an established procedure or SOP

- QC outside of limits (non matrix related)
- Isolated Reporting / Calculation Errors
- Client Complaints

13.4 CLOSED LOOP CORRECTIVE ACTION PROCESS

Any employee in the company can initiate a corrective action. There are four main components to a closed-loop corrective action process once an issue has been identified: Cause Analysis, Selection and Implementation of Corrective Actions (both short and long term), Monitoring of the Corrective Actions, and Follow-up.

13.4.1 Cause Analysis

- Upon discovery of a non-conformance event, the event must be defined and documented. An NCM must be initiated, someone is assigned to investigate the issue and the event is investigated for cause. Table 13-1 in SOP CORP-QA-0010, Nonconformance and Corrective Action System, provides some general guidelines on determining responsibility for assessment.
- The cause analysis step is the key to the process as a long term corrective action cannot be determined until the cause is determined.
- If the cause is not readily obvious, the Supervisor, Lab Director, QA Manager, or designee is consulted.

13.4.2 Selection and Implementation of Corrective Actions

- Where corrective action is needed, the laboratory shall identify potential corrective actions. The action(s) most likely to eliminate the problem and prevent recurrence are selected and implemented. Responsibility for implementation is assigned.
- Corrective actions shall be to a degree appropriate to the magnitude of the problem identified through the cause analysis.
- Whatever corrective action is determined to be appropriate, the laboratory shall document and implement the changes. The NCM is used for this documentation.

13.4.3 Monitoring of the Corrective Actions

- The Department Manager/Supervisor and QA Manager is responsible to ensure that the corrective action taken was effective.
- Ineffective actions will be documented and re-evaluated until acceptable resolution is achieved. Department Managers are accountable to the Laboratory Director to ensure final acceptable resolution is achieved and documented appropriately.
- Each NCM is entered into a database for tracking purposes and a monthly summary of all corrective actions is printed out for review to aid in ensuring that the corrective actions have taken effect.
- The QA Manager reviews monthly NCMs for trends. Highlights are included in the QA monthly report (refer to Section 17). If a significant trend develops that adversely affects quality, an audit of the area is performed and corrective action implemented.

- Any out-of-control situations that are not addressed acceptably at the laboratory level may be reported to the Corporate Quality Director by the QA Manager, indicating the nature of the out-of-control situation and problems encountered in solving the situation.

13.4.4 Follow-up Audits

- Follow-up audits may be initiated by the QA Manager and shall be performed as soon as possible when the identification of a nonconformance casts doubt on the laboratory's compliance with its own policies and procedures, or on its compliance with state or federal requirements. (Section 16 includes additional information regarding internal audit procedures.)
- These audits often follow the implementation of the corrective actions to verify effectiveness. An additional audit would only be necessary when a critical issue or risk to business is discovered.

13.5 TECHNICAL CORRECTIVE ACTIONS

In addition to providing acceptance criteria and specific protocols for technical corrective actions in the method SOPs, the laboratory has general procedures to be followed to determine when departures from the documented policies and procedures and quality control have occurred (refer to Section 12 for information regarding the control of non-conforming work). The documentation of these procedures is through the use of an NCM.

Table 13-1 includes examples of general technical corrective actions. For specific criteria and corrective actions refer to the analytical methods or specific method SOPs.

Table 13-1 provides some general guidelines for identifying the individual(s) responsible for assessing each QC type and initiating corrective action. The table also provides general guidance on how a data set should be treated if associated QC measurements are unacceptable. Specific procedures are included in Method SOPs, QAM Sections 20 and 21, and SOP CA-L-S-001, Internal Investigation of Potential Data Discrepancies and Determination for Data Recall. All corrective actions are reviewed at a minimum monthly by the QA Manager and highlights are included in the QA monthly report.

To the extent possible, samples shall be reported only if all quality control measures are acceptable. If the deficiency does not impair the usability of the results, data will be reported with an appropriate data qualifier and/or the deficiency will be noted in the case narrative. Where sample results may be impaired, the Project Manager is notified by a written NCM and appropriate corrective action (e.g., reanalysis) is taken and documented.

13.6 BASIC CORRECTIONS

When mistakes occur in records, each mistake shall be crossed-out, and not erased, deleted, made illegible, or otherwise obliterated (e.g. no white-out), and the correct value entered alongside. All such corrections shall be initialed (or signed) and dated by the person making the correction. In the case of records stored electronically, the original "uncorrected" file must be maintained intact and a second "corrected" file is created.

This same process applies to adding additional information to a record. All additions made later than the initial must also be initialed (or signed) and dated.

When corrections are due to reasons other than obvious transcription errors, the reason for the corrections (or additions) shall also be documented.

Table 13-1.
Example – General Corrective Action Procedures

*** For Ohio VAP, method blank contamination must not exceed the RL if that analyte is a Contaminant of Concern for the project site.**

INORGANIC LABORATORY QUALITY CONTROL SAMPLES

Analysis	QC Sample	Method	NPDES [1]	Method	RCRA (SW846) [2]
Alkalinity	* Method Blank	310.1 2320B	Frequency: 1 with each batch of samples processed not to exceed 20 samples Criteria: Concentration must be less than the reporting limit Corrective Action: Rerun all samples associated with unacceptable blank	—	N/A
	Laboratory Control Sample	310.1 2320B	Frequency: 1 with each batch of samples processed not to exceed 20 samples Criteria: Percent recovery must be within laboratory control limits Corrective Action: If not within laboratory control limits, rerun all associated samples	—	N/A
	Matrix Spike	310.1 2320B	Total alkalinity: 1 per batch of 20 samples	—	N/A
	Matrix Spike Duplicate	310.1 2320B	Total alkalinity: 1 per batch of 20 samples	—	N/A
	Duplicate	310.1 2320B	For carbonate, bicarbonate, hydroxide, alkalinity only. Frequency: 1 per batch of 10 samples Criteria 310.1: ≤ 20 % RPD(3) Criteria 2320B: ≤ 25 % RPD(3) Corrective Action: Flag data outside of limit.	—	N/A

INORGANIC LABORATORY QUALITY CONTROL SAMPLES (Cont'd)

Analysis	QC Sample	Method	NPDES [1]	Method	RCRA (SW846) [2]
Ammonia	* Method Blank	350.1 350.2 SM4500 NH-E,F	Frequency: 1 with each batch of samples processed not to exceed 20 samples Criteria: Concentration less than reporting limit Corrective Action: Rerun all samples associated with unacceptable blank	—	N/A
	Laboratory Control Sample	350.1 350.2 SM4500 NH-E,F	Frequency: 1 with each batch of samples processed not to exceed 20 samples Criteria: Percent recovery must be within laboratory control limits Corrective Action: If not within control limits, rerun all associated samples	—	N/A
	Matrix Spike	350.1 350.2 SM4500 NH-E,F	Frequency: 1 per 20 samples, minimum of one per batch of samples processed Criteria: Percent recovery must be within laboratory control limits Corrective Action: Flag data outside of limit	—	N/A

INORGANIC LABORATORY QUALITY CONTROL SAMPLES (Cont'd)

Analysis	QC Sample	Method	NPDES [1]	Method	RCRA (SW846) [2]
Ammonia (Cont'd)	Matrix Spike Duplicate	350.1 350.2 SM4500 NH-E,F	Frequency: 1 per 20 samples, minimum of one per batch of samples processed Criteria: Percent recovery must be within laboratory control limits Corrective Action: Flag data outside of limit	—	N/A
	Duplicate	350.1 350.2 SM4500 NH-E,F	N/A	—	N/A
Ammonia (TKN)	* Method Blank	351.2 351.3 SM4500 NO_3	Frequency: 1 with each batch of samples processed not to exceed 20 samples Criteria: Concentration must be less than the reporting limit Corrective Action: Rerun all samples associated with unacceptable blank	—	N/A

INORGANIC LABORATORY QUALITY CONTROL SAMPLES (Cont'd)

Analysis	QC Sample	Method	NPDES [1]	Method	RCRA (SW846) [2]
Ammonia (TKN) (Cont'd)	Laboratory Control Sample	351.2 351.3 SM4500 NO_3	Frequency: 1 with each batch of samples processed not to exceed 20 samples Criteria: Percent recovery must be within laboratory control limits Corrective Action: If not within laboratory control limits, rerun all associated samples	—	N/A
	Matrix Spike	351.2 351.3 SM4500 NO_3	Frequency: 1 per 20 samples, minimum of one per batch of samples processed Criteria: Must be within laboratory control limits Corrective Action: Flag data outside of limit	—	N/A
	Matrix Spike Duplicate	351.2 351.3 SM4500 NO_3	Frequency: 1 per 20 samples, minimum of one per batch of samples processed Criteria: Must be within laboratory control limits Corrective Action: Flag data outside of limit	—	N/A
	Duplicate	351.2 351.3 SM4500 NO_3	N/A	—	N/A

INORGANIC LABORATORY QUALITY CONTROL SAMPLES (Cont'd)

Analysis	QC Sample	Method	NPDES [1]	Method	RCRA (SW846) [2]
BOD	* Method Blank	405.1 SM5210B	Frequency: 1 with each batch of samples processed not to exceed 20 samples Criteria: Concentration must be less than the reporting limit Corrective Action: Rerun all samples associated with unacceptable blank	—	N/A
	Laboratory Control Sample and Laboratory Control Sample Duplicate	405.1 SM5210B	Frequency: 1 with each batch of samples processed not to exceed 20 samples Criteria: Percent recovery must be within laboratory control limits Corrective Action: If not within laboratory control limits, rerun all associated samples	—	N/A
	Matrix Spike	405.1 SM5210B	N/A	—	N/A
	Matrix Spike Duplicate	405.1 SM5210B	N/A	—	N/A
	Duplicate	405.1 SM5210B	N/A	—	N/A

INORGANIC LABORATORY QUALITY CONTROL SAMPLES (Cont'd)

Analysis	QC Sample	Method	NPDES [1]	Method	RCRA (SW846) [2]
Bromide	* Method Blank	300.0A(5)	Frequency: 1 with each batch of samples processed not to exceed 20 samples Criteria: Concentration must be less than the reporting limit Corrective Action: Rerun all samples associated with unacceptable blank	9056A	Frequency: 1 with each batch of samples processed not to exceed 20 samples Criteria: Concentration must be less than the reporting limit Corrective Action: Rerun all samples associated with unacceptable blank
	Laboratory Control Sample and Laboratory Control Sample Duplicate	300.0A(5)	Frequency: 1 with each batch of samples processed not to exceed 20 samples Criteria: Percent recovery must be within laboratory control limits Corrective Action: If not within control limits, rerun all associated samples	9056A	Frequency: 1 with each batch of samples processed not to exceed 20 samples Criteria: Percent recovery must be within laboratory control limits Corrective Action: If not within control limits, rerun all associated samples
	Matrix Spike	300.0A(5)	Frequency: 1 per 10 samples, minimum of one per batch of samples processed Criteria: Percent recovery must be within laboratory control limits Corrective Action: Flag data outside of limit	9056A	Frequency: 1 with each batch of samples processed not to exceed 20 samples Criteria: Percent recovery must be within laboratory control limits Corrective Action: Flag data associated with MS outside of limit
	Matrix Spike Duplicate	300.0A(5)	N/A	9056A	N/A
	Duplicate	300.0A(5)	N/A	9056A	N/A

INORGANIC LABORATORY QUALITY CONTROL SAMPLES (Cont'd)

Analysis	QC Sample	Method	NPDES [1]	Method	RCRA (SW846) [2]
Chemical Oxygen Demand (COD)	* Method Blank	410.4 SM5220D	Frequency: 1 with each batch of samples processed not to exceed 20 samples Criteria: Concentration must be less than the reporting limit Corrective Action: Rerun all samples associated with unacceptable blank	—	N/A
	Laboratory Control Sample and Laboratory Control Sample Duplicate	410.4 SM5220D	Frequency: 1 with each batch of samples processed not to exceed 20 samples Criteria: Percent recovery must be within laboratory control limits Corrective Action: If not within laboratory control limits, rerun all associated samples	—	N/A
	Matrix Spike	410.4 SM5220D	Frequency: 1 per 10 samples, minimum of one per batch of samples processed Criteria: Must be within laboratory control limits Corrective Action: Flag data outside of limit	—	N/A
	Matrix Spike Duplicate	410.4 SM5220D	Frequency: 1 per 20 samples, minimum of one per batch of samples processed Criteria: Must be within laboratory control limits Corrective Action: Flag data outside of limit	—	N/A
	Duplicate	410.4 SM5220D	N/A	—	N/A

INORGANIC LABORATORY QUALITY CONTROL SAMPLES (Cont'd)

Analysis	QC Sample	Method	NPDES [1]	Method	RCRA (SW846) [2]
Chloride	* Method Blank	300.0A [5] 325.2 325.3	Frequency: 1 with each batch of samples processed not to exceed 20 samples Criteria: Concentration must be less than the reporting limit Corrective Action: Rerun all samples associated with unacceptable blank	9056A	Frequency: 1 with each batch of samples processed not to exceed 20 samples Criteria: Concentration must be less than the reporting limit Corrective Action: Rerun all samples associated with unacceptable blank
	Laboratory Control Sample	300.0A [5] 325.2 325.3	Frequency: 1 with each batch of samples processed not to exceed 20 samples Criteria: Percent recovery must be within laboratory control limits Corrective Action: If not within control limits, rerun all associated samples	9056A	Frequency: 1 with each batch of samples processed not to exceed 20 samples Criteria: Percent recovery must be within laboratory control limits Corrective Action: If not within laboratory control limits, rerun all associated samples
	Matrix Spike	300.0A(5)	Frequency: 1 per 10 samples, minimum of one per batch of samples processed Criteria: Percent recovery must be within laboratory control limits Corrective Action: Flag data outside of limit	9056A	Frequency: 1 with each batch of samples processed not to exceed 20 samples Criteria: Percent recovery must be within laboratory control limits Methods 9251Corrective Action: If not within laboratory control limits, rerun all associated samples Method 9056/9253 Corrective Action: Flag data associated with MS outside of limits

INORGANIC LABORATORY QUALITY CONTROL SAMPLES (Cont'd)

Analysis	QC Sample	Method	NPDES [1]	Method	RCRA (SW846) [2]
Chloride (cont'd)	Matrix Spike Duplicate	325.2 325.3	Frequency: 1 per 20 samples, minimum of one per batch of samples processed Criteria: Percent recovery must be within laboratory control limits Corrective Action: Flag data outside of limit	9056A	Frequency: 1 with each batch of samples processed not to exceed 20 samples Criteria: Percent recovery must be within laboratory control limits/< 20 % RPD(3) Corrective Action: Flag data outside of limit Method 9056: MSD is not applicable
	Duplicate	300.0A(5) 325.2 325.3	N/A	9056A	N/A
Chlorine, Residual	* Method Blank	330.5	Frequency: 1 with each batch of samples processed not to exceed 20 samples Criteria: Concentration must be less than the reporting limit Corrective Action: Rerun all samples associated with unacceptable blank	—	N/A
	Laboratory Control Sample	330.5	N/A	—	N/A
	Matrix Spike	330.5	N/A	—	N/A
	Matrix Spike Duplicate	330.5	N/A	—	N/A
	Duplicate	330.5	Frequency: 1 with each batch of samples processed not to exceed 20 samples Criteria: ≤ 20 % RPD(3) Corrective Action: Flag data outside of limit.	—	Water

INORGANIC LABORATORY QUALITY CONTROL SAMPLES (Cont'd)

Analysis	QC Sample	Method	NPDES [1]	Method	RCRA (SW846) [2]
Chromium (Cr^{+6})	* Method Blank	3500 Cr-D	Frequency: 1 with each batch of samples processed not to exceed 20 samples Criteria: Concentration must be less than the reporting limit Corrective Action: Rerun all samples associated with unacceptable blank	7196A 3060A	Frequency: 1 with each batch of samples processed not to exceed 20 samples Criteria: Concentration less than reporting limit Corrective Action: Rerun all samples associated with unacceptable blank
	Laboratory Control Sample	3500 Cr-D	Frequency: 1 with each batch of samples processed not to exceed 20 samples Criteria: Percent recovery must be within laboratory control limits Corrective Action: If not within laboratory control limits, rerun all associated samples	7196A 3060A	Frequency: 1 with each batch of samples processed not to exceed 20 samples prepped Criteria: percent recovery for water must be within ± 15 % and for solids must be within ± 20% Corrective Action: Rerun all samples associated with unacceptable LCS
	Matrix Spike	3500 Cr-D	Frequency: 1 with each batch of samples processed not to exceed 20 samples Criteria: Must be within laboratory QC limits Corrective Action: Flag data outside of limit	3060A 7196A	Frequency: 1 with each batch of samples processed not to exceed 20 samples Criteria: Advisory limits are 75% - 125% recovery Corrective Action: Flag data associated with unacceptable Matrix Spike

INORGANIC LABORATORY QUALITY CONTROL SAMPLES (Cont'd)

Analysis	QC Sample	Method	NPDES [1]	Method	RCRA (SW846) [2]
Chromium (Cr^{+6}) (Cont'd)	Matrix Spike Duplicate	3500 Cr-D	Frequency: 1 with each batch of samples processed not to exceed 20 samples Criteria: Must be within laboratory QC limits Corrective Action: Flag data outside of limit	7196A 3060A	Frequency: 1 with each batch of samples processed not to exceed 20 samples Criteria: Advisory limits are 75% - 125% recovery Corrective Action: Flag data associated with unacceptable Matrix Spike
	Duplicate	3500 Cr-D	N/A	7196A 3060A	Frequency: 1 with each batch of samples processed not to exceed 20 samples Criteria: ≤ 20 % RPD(3) limit Corrective Action: Flag data outside of limit.

INORGANIC LABORATORY QUALITY CONTROL SAMPLES (Cont'd)

Analysis	QC Sample	Method	NPDES [1]	Method	RCRA (SW846) [2]
Conductivity, Specific	* Method Blank	120.1 SM2510B	N/A	9050A	Not Applicable
	Laboratory Control Sample	120.1 SM2510B	Frequency: 1 with each batch of samples processed not to exceed 20 samples Criteria: Percent recovery must be within laboratory control limits Corrective Action: If not within laboratory control limits, rerun all associated samples	9050A	Frequency: 1 with each batch of samples processed not to exceed 20 samples Criteria: Percent recovery must be within laboratory control limits Corrective Action: If not within laboratory control limits, rerun all associated samples
	Matrix Spike	120.1 SM2510B	N/A	9050A	N/A
	Matrix Spike Duplicate	120.1 SM2510B	N/A	9050A	N/A
	Duplicate	120.1 SM2510B	Frequency: 1 with each batch of samples processed not to exceed 10 samples Criteria: $\leq$ 20 % RPD(3) Corrective Action: Flag data outside of limit.	9050A	Frequency: 1 with each batch of samples processed not to exceed 10 samples

INORGANIC LABORATORY QUALITY CONTROL SAMPLES (Cont'd)

Analysis	QC Sample	Method	NPDES [1]	Method	RCRA (SW846) [2]
Cyanide (Amenable)	* Method Blank	335.1 SM4500C N-G	Frequency: 1 with each batch of samples processed not to exceed 20 samples Criteria: Concentration must be less than the reporting limit Corrective Action: Rerun all samples associated with unacceptable blank	9012A	Frequency: 1 with each batch of samples processed not to exceed 20 samples Criteria: Concentration less than reporting limit Corrective Action: Rerun all samples associated with unacceptable blank
	Laboratory Control Sample	335.1 SM4500C N-G	Frequency: 1 with each batch of samples processed not to exceed 20 samples Criteria: Percent recovery must be within laboratory control limits Corrective Action: If not within laboratory control limits, rerun all associated samples	9012A	Frequency: 1 with each batch of samples processed not to exceed 20 samples Criteria: Percent recovery must be within laboratory control limits Corrective Action: Rerun all samples associated with unacceptable LCS
	Matrix Spike	335.1 SM4500C N-G	N/A	9012A	N/A
	Matrix Spike Duplicate	335.1 SM4500C N-G	N/A	9012A	Frequency: 1 with each batch of samples processed not to exceed 20 samples Criteria: Percent recovery must be within lab control limits Corrective Action: Flag data associated with unacceptable Matrix Spike
	Duplicate	335.1 SM4500C N-G	N/A	9012A	N/A

INORGANIC LABORATORY QUALITY CONTROL SAMPLES (Cont'd)

Analysis	QC Sample	Method	NPDES [1]	Method	RCRA (SW846) [2]
Cyanide (Total)	* Method Blank	335.2 335.3 335.4 4500-CN E	Frequency: 1 with each batch of samples processed not to exceed 20 samples Criteria: Concentration must be less than the reporting limit Corrective Action: Rerun all samples associated with unacceptable blank	9012A	Frequency: 1 with each batch of samples processed not to exceed 20 samples Criteria: Concentration less than reporting limit Corrective Action: Rerun all samples associated with unacceptable blank
	Laboratory Control Sample	335.2 335.3 335.4 4500-CN E	Frequency: 1 with each batch of samples processed not to exceed 20 samples Criteria: Percent recovery must be within laboratory control limits Corrective Action: If not within laboratory control limits, rerun all associated samples	9012A	Frequency: 1 with each batch of samples processed not to exceed 20 samples Criteria: Percent recovery must be within laboratory control limits Corrective Action: Rerun all samples associated with unacceptable LCS
	Matrix Spike	335.2 335.3 335.4 4500-CN E	Frequency: 1 per 20 samples, minimum of one per batch of samples processed Criteria: Percent recovery must be within laboratory control limits Corrective Action: Flag data outside of limit	9012A	Frequency: 1 with each batch of samples processed not to exceed 20 samples Criteria: Percent recovery must be within laboratory control limits Corrective Action: Flag data associated with unacceptable Matrix Spike

INORGANIC LABORATORY QUALITY CONTROL SAMPLES (Cont'd)

Analysis	QC Sample	Method	NPDES [1]	Method	RCRA (SW846) [2]
Cyanide (Total) (cont'd)	Matrix Spike Duplicate	335.2 335.3 335.4 4500-CN E	Frequency: 1 per 20 samples, minimum of one per batch of samples processed Criteria: Percent recovery must be within laboratory control limits Corrective Action: Flag data outside of limit	9012A	Frequency: 1 with each batch of samples processed not to exceed 20 samples Criteria: Percent recovery must be within laboratory control limits Corrective Action: Flag data associated with unacceptable Matrix Spike
	Duplicate	335.2 335.3 335.4	N/A	9012A	N/A
Flashpoint	* Method Blank	—	N/A	1010 ASTM D93-9	N/A
	Laboratory Control Sample	—	N/A	1010 ASTM D93-9	N/A
	Matrix Spike	—	N/A	1010 ASTM D93-9	N/A
	Matrix Spike Duplicate	—	N/A	1010 ASTM D93-9	N/A
	Duplicate	—	Frequency: 1 per batch of ≤20 samples per matrix Criteria: RPD(3) must be ≤ 20% Corrective Action: Flag data associated with unacceptable Duplicate	1010 ASTM D93-9	Frequency: 1 per batch of ≤20 samples per matrix Criteria: RPD(3) must be ≤ 20% Corrective Action: Flag data associated with unacceptable Duplicate

INORGANIC LABORATORY QUALITY CONTROL SAMPLES (Cont'd)

Analysis	QC Sample	Method	NPDES [1]	Method	RCRA (SW846) [2]
Fluoride	* Method Blank	300.0A(5) 340.2 SM4500F-C,ISE	Frequency: 1 with each batch of samples processed not to exceed 20 samples Criteria: Concentration must be less than the reporting limit Corrective Action: Rerun all samples associated with unacceptable blank	9056A	Frequency: 1 with each batch of samples processed not to exceed 20 samples Criteria: Concentration must be less than the reporting limit Corrective Action: Rerun all samples associated with unacceptable
	Laboratory Control Sample	300.0A(5) 340.2 SM4500F-C,ISE	Frequency: 1 with each batch of samples processed not to exceed 20 samples Criteria: Percent recovery must be within laboratory control limits Corrective Action: If not within laboratory control limits, rerun all associated samples	9056A	Frequency: 1 with each batch of samples processed not to exceed 20 samples Criteria: Percent recovery must be within laboratory control limits Corrective Action: If not within control limits, rerun all associated samples
	Laboratory Control Sample Duplicate	300.0A(5) SM4500F-C,ISE	Frequency: 1 with each batch of samples processed not to exceed 20 samples Criteria: Percent recovery must be within laboratory control limits Corrective Action: If not within laboratory control limits, rerun all associated samples	9056	Frequency: 1 with each batch of samples processed not to exceed 20 samples Criteria: Percent recovery must be within laboratory control limits Corrective Action: If not within control limits, rerun all associated samples

INORGANIC LABORATORY QUALITY CONTROL SAMPLES (Cont'd)

Analysis	QC Sample	Method	NPDES [1]	Method	RCRA (SW846) [2]
Flouride (Cont'd)	Matrix Spike	300.0A(5) 340.2 SM4500F-C,ISE	Frequency: 1 per 10 samples by IC Criteria: Must be within laboratory QC limits Corrective Action: Flag data outside of limit	9056A	Frequency: 1 with each batch of samples processed not to exceed 20 samples Criteria: Percent recovery must be within laboratory control limits Corrective Action: Flag data associated with outside of limit
	Matrix Spike Duplicate	340.2 SM4500F-C,ISE	Frequency: 1 per 20 samples by IC Criteria: Must be within laboratory QC limits Corrective Action: Flag data outside of limit	340.2	N/A
	Duplicate	300.0A(5) 340.2 SM4500F-C,ISE	N/A	9056A	Frequency: 1 with each batch of samples processed Criteria: RPD(3) must be within laboratory control limits Corrective Action: Flag data associated with duplicates outside of laboratory RPD(3) limits

INORGANIC LABORATORY QUALITY CONTROL SAMPLES (Cont'd)

Analysis	QC Sample	Method	NPDES [1]	Method	RCRA (SW846) [2]
Hardness	* Method Blank	130.2 2340B	Frequency: 1 with each batch of samples processed not to exceed 20 samples Criteria: Concentration must be less than the reporting limit Corrective Action: Rerun all samples associated with unacceptable blank	—	N/A
	Laboratory Control Sample	130.2 2340B	Frequency: 1 with each batch of samples processed not to exceed 20 samples Criteria: Percent recovery must be within laboratory control limits Corrective Action: If not within laboratory control limits, rerun all associated samples	—	N/A
	Matrix Spike	130.2 2340B	Method 130.2: 1 per 20 samples Method 2340B: Frequency , Criteria, and Corrective Action: See ICP Metals Method 200.7 Requirements	—	N/A

INORGANIC LABORATORY QUALITY CONTROL SAMPLES (Cont'd)

Analysis	QC Sample	Method	NPDES [1]	Method	RCRA (SW846) [2]
Hardness (cont'd)	Matrix Spike Duplicate	130.2 2340B	Method 130.2: 1 per 20 samples Method 2340B: Frequency, Criteria, and Corrective Action: See ICP Metals Method 200.7 Requirements	—	N/A
	Duplicate	130.2 2340B	N/A	—	N/A
Iron, Ferrous & Ferric	* Method Blank	3500-Fe D	Frequency: 1 with each batch of samples processed not to exceed 20 samples Criteria: Concentration must be less than the reporting limit Corrective Action: Rerun all samples associated with unacceptable blank	—	N/A
	Laboratory Control Sample	3500-Fe D	Frequency: 1 with each batch of samples processed not to exceed 20 samples Criteria: Percent recovery must be within laboratory control limits Corrective Action: If not within laboratory control limits, rerun all associated samples	—	N/A

INORGANIC LABORATORY QUALITY CONTROL SAMPLES (Cont'd)

Analysis	QC Sample	Method	NPDES [1]	Method	RCRA (SW846) [2]
Iron, Ferrous & Ferric (Cont'd)	Matrix Spike	3500-Fe D	Frequency: 1 every 10 samples Criteria: Must be within laboratory QC limits Corrective Action: Flag associated data outside of limit	—	N/A
	Matrix Spike Duplicate	3500-Fe D	Frequency: 1 every 10 samples Criteria: Must be within laboratory QC limits Corrective Action: Flag associated data outside of limit	—	N/A
	Duplicate	3500-Fe D	N/A	—	N/A
Nitrate	* Method Blank	300.0A(5) 353.2 SM4500-NO_3-E	Frequency: 1 with each batch of samples processed not to exceed 20 samples Criteria: Concentration must be less than the reporting limit Corrective Action: Rerun all samples associated with unacceptable blank	9056A	Frequency: 1 with each batch of samples processed not to exceed 20 samples Criteria: Concentration must be less than the reporting limit

INORGANIC LABORATORY QUALITY CONTROL SAMPLES (Cont'd)

Analysis	QC Sample	Method	NPDES [1]	Method	RCRA (SW846) [2]
Nitrate (Cont'd)	Laboratory Control Sample	300.0A(5) 353.2 SM4500-NO_3-E	Frequency: 1 with each batch of samples processed not to exceed 20 samples Criteria: Percent recovery must be within laboratory control limits Corrective Action: If not within laboratory control limits, rerun all associated samples	9056A	Frequency: 1 with each batch of samples processed not to exceed 20 samples Criteria: Percent recovery must be within laboratory control limits Corrective Action: If not within laboratory control limits, rerun all associated samples
	Matrix Spike	300.0A(5) 353.2 SM4500-NO_3-E	Frequency: 1 per 10 samples, minimum of one per batch of samples processed Criteria: Must be within laboratory control limits Corrective Action: Flag data outside of limit	9056A	Frequency: 1 with each batch of samples processed not to exceed 20 samples Criteria: Percent recovery must be within laboratory control limits Corrective Action: If not within laboratory control limits, flag all associated samples
	Matrix Spike Duplicate	300.0A(5) 353.2 SM4500-NO_3-E	Frequency: 1 per 20 samples, minimum of one per batch of samples processed Criteria: Must be within laboratory control limits Corrective Action: Flag data outside of limit	9056A	N/A

INORGANIC LABORATORY QUALITY CONTROL SAMPLES (Cont'd)

Analysis	QC Sample	Method	NPDES [1]	Method	RCRA (SW846) [2]
Nitrate (cont'd)	Duplicate	300.0A(5) 353.2 SM4500-NO_3-E	N/A	9056A	Frequency: 1 per 10 samples Criteria: RPD(3) must be within laboratory control limits Corrective Action: If not within laboratory control limits, flag all associated samples
Nitrite	* Method Blank	300.0A(5) 353.2	Frequency: 1 with each batch of samples processed not to exceed 20 samples Criteria: Concentration must be less than the reporting limit Corrective Action: Rerun all samples associated with unacceptable blank	9056A	Frequency: 1 with each batch of samples processed not to exceed 20 samples Criteria: Concentration must be less than the reporting limit Corrective Action: Rerun all samples associated with unacceptable blank
	Laboratory Control Sample	300.0A(5) 354.1 353.2	Frequency: 1 with each batch of samples processed not to exceed 20 samples Criteria: Percent recovery must be within laboratory control limits Corrective Action: If not within laboratory control limits, rerun all associated samples	9056A	Frequency: 1 with each batch of samples processed not to exceed 20 samples Criteria: Percent recovery must be within laboratory control limits Corrective Action: If not within laboratory control limits, rerun all associated samples

INORGANIC LABORATORY QUALITY CONTROL SAMPLES (Cont'd)

Analysis	QC Sample	Method	NPDES [1]	Method	RCRA (SW846) [2]
Nitrite (Cont'd)	Matrix Spike	300.0A[(5)] 354.1 353.2	Frequency: 1 per 10 samples, minimum of one per batch of samples processed Criteria: Must be within laboratory control limits Corrective Action: Flag data outside of limit	9056A	Frequency: 1 with each batch of samples processed not to exceed 20 samples Criteria: Percent recovery must be within laboratory control limits Corrective Action: If not within laboratory control limits, flag all associated samples
	Matrix Spike Duplicate	300.0A[(5)] 354.1 353.2	Frequency: 1 per 20 samples, minimum of one per batch of samples processed Criteria: Must be within laboratory control limits Corrective Action: Flag data outside of limit	9056A	N/A
	Duplicate	300.0A[(5)] 354.1 353.2	N/A	9056A	Frequency: 1 per 10 samples Criteria: RPD[(3)] must be within laboratory control limits Corrective Action: If not within laboratory control limits, flag all associated samples

INORGANIC LABORATORY QUALITY CONTROL SAMPLES (Cont'd)

Analysis	QC Sample	Method	NPDES [1]	Method	RCRA (SW846) [2]
Nitrate-Nitrite	* Method Blank	353.2	Frequency: 1 with each batch of samples processed not to exceed 20 samples Criteria: Concentration must be less than the reporting limit Corrective Action: Rerun all samples associated with unacceptable blank	—	N/A
	Laboratory Control Sample	353.2	Frequency: 1 with each batch of samples processed not to exceed 20 samples Criteria: Percent recovery must be within laboratory control limits Corrective Action: If not within laboratory control limits, rerun all associated samples	—	N/A
	Matrix Spike	353.2	Frequency: 1 per 20 samples, minimum of one per batch of samples processed Criteria: Percent recovery must be within laboratory control limits Corrective Action: Flag data outside of limit	—	N/A
	Matrix Spike Duplicate	353.2	Frequency: 1 per 20 samples, minimum of one per batch of samples processed Criteria: Percent recovery must be within laboratory control limits Corrective Action: Flag data outside of limit	—	N/A
	Duplicate	353.2	N/A	—	N/A

INORGANIC LABORATORY QUALITY CONTROL SAMPLES (Cont'd)

Analysis	QC Sample	Method	NPDES [1]	Method	RCRA (SW846) [2]
pH	* Method Blank	150.1 SM4500H-B	N/A	9040B 9045C	N/A
	Laboratory Control Sample	150.1 SM4500H-B	Frequency: 1 with each batch of samples processed not to exceed 20 samples Criteria: Percent recovery must be within laboratory control limits Corrective Action: If not within laboratory control limits, rerun all associated samples	9040B 9045C	N/A
	Matrix Spike	150.1 SM4500H-B	N/A	9040B 9045C	N/A
	Matrix Spike Duplicate	150.1 SM4500H-B	N/A	9040B 9045C	N/A
	Duplicate	150.1 SM4500H-B	Frequency: 1 with each batch of samples processed not to exceed 10 samples per matrix Criteria: ≤ 20 % RPD(3) limit Corrective Action: Flag data outside of limit.	9040B 9045C	Frequency: 1 with each batch of samples processed not to exceed 20 samples Criteria: Advisory limits are ≤ 20% RPD(3) Corrective Action: Flag data associated with unacceptable Duplicate
Phenolics	* Method Blank	420.1	Frequency: 1 with each batch of samples processed not to exceed 20 samples Criteria: Concentration must be less than the reporting limit Corrective Action: Rerun all samples associated with unacceptable blank	9065	Frequency: 1 with each batch of samples processed not to exceed 20 samples Criteria: Concentration less than reporting limit Corrective Action: Rerun all samples associated with unacceptable blank

INORGANIC LABORATORY QUALITY CONTROL SAMPLES (Cont'd)

Analysis	QC Sample	Method	NPDES [1]	Method	RCRA (SW846) [2]
Phenolics (Cont'd)	Laboratory Control Sample	420.1	Frequency: 1 with each batch of samples processed not to exceed 20 samples Criteria: Percent recovery must be within laboratory control limits Corrective Action: If not within laboratory control limits, rerun all associated samples	9065	Frequency: 1 with each batch of samples processed not to exceed 20 samples Criteria: Percent recovery must be within laboratory control limits Corrective Action: If not within laboratory control limits, rerun all associated samples
	Matrix Spike	420.1	Frequency: 1 with each batch of samples processed not to exceed 20 samples Criteria: Percent recovery must be within laboratory control limits Corrective Action: Flag data associated with unacceptable matrix spike	9065	Frequency: 1 with each batch of samples processed not to exceed 20 samples Criteria: Percent recovery must be within laboratory control limits Corrective Action: Flag associated data
	Matrix Spike Duplicate	420.1	Frequency: 1 with each batch of samples processed not to exceed 20 samples Criteria: Percent recovery must be within laboratory control limits Corrective Action: Flag associated data	9065	Frequency: 1 with each batch of samples processed not to exceed 20 samples Criteria: Percent recovery must be within laboratory control limits Corrective Action: Flag associated data

INORGANIC LABORATORY QUALITY CONTROL SAMPLES (Cont'd)

Analysis	QC Sample	Method	NPDES [1]	Method	RCRA (SW846) [2]
Phosphorus (Total and Ortho-phosphate)	* Method Blank	300.0 (4,5) 365.3 365.1 SM4500P-E	Frequency: 1 with each batch of samples processed not to exceed 20 samples Criteria: Concentration must be less than the reporting limit Corrective Action: Rerun all samples associated with unacceptable blank	9056A	Frequency: 1 with each batch of samples processed not to exceed 20 samples Criteria: Concentration less than reporting limit Corrective Action: Rerun all samples associated with unacceptable blank
	Laboratory Control Sample	300.0(4,5) 365.3 365.1 SM4500P-E	Frequency: 1 with each batch of samples processed not to exceed 20 samples Criteria: Percent recovery must be within laboratory control limits Corrective Action: If not within laboratory control limits, rerun all associated samples	9056A	Frequency: 1 with each batch of samples processed not to exceed 20 samples Criteria: Percent recovery must be within laboratory control limits Corrective Action: If not within laboratory control limits, rerun all associated samples
	Matrix Spike	300.0(4,5) 365.3 365.1 SM4500P-E	Frequency: 1 per 10 samples Criteria: Must be within laboratory QC limits Corrective Action: Flag data outside of limit	9056A	Frequency: 1 with each batch of samples processed not to exceed 20 samples Criteria: Percent recovery must be within laboratory control limits Corrective Action: Flag associated data associated with MS outside of limits
	Matrix Spike Duplicate	365.3 365.1 SM4500P-E	Frequency: 1 per 20 samples Criteria: Must be within laboratory QC limits Corrective Action: Flag data outside of limit	9056A	**N/A**

INORGANIC LABORATORY QUALITY CONTROL SAMPLES (Cont'd)

Analysis	QC Sample	Method	NPDES [1]	Method	RCRA (SW846) [2]
Phosphorus (Total and Ortho-phosphate) (Cont'd)	Duplicate	300.0(4,5) 365.3 365.1 SM4500P-E	N/A	9056A	Frequency: 1 with each batch of samples processed Criteria: RPD(3) must be within laboratory control limits Corrective Action: Flag data associated with duplicates outside of laboratory RPD(3) limits
Solids	* Method Blank	160.1 160.2 160.3 160.4 160.5 SM2540E	Frequency: 1 with each batch of samples processed not to exceed 20 samples Criteria: Concentration must be less than the reporting limit Corrective Action: If analyte level in method blank is ≥ RL for the analyte of interest in the sample, all associated samples with reportable levels of analyte are reprepared and reanalyzed.	—	N/A
	Laboratory Control Sample	160.1 160.2 160.3 160.4 160.5 SM2540E	Frequency: 1 with each batch of samples processed not to exceed 20 samples Criteria: Percent recovery must be within laboratory control limits Corrective Action: If not within laboratory control limits, reprepare and rerun all associated samples	—	N/A

INORGANIC LABORATORY QUALITY CONTROL SAMPLES (Cont'd)

Analysis	QC Sample	Method	NPDES [1]	Method	RCRA (SW846) [2]
Solids (Cont'd)	Matrix Spike	160.1 160.2 160.3 160.4 160.5 SM4500P-E	N/A	—	N/A
	Matrix Spike Duplicate	160.1 160.2 160.3 160.4 160.5 SM4500P-E	N/A	—	N/A
	Duplicate	160.1 160.2 160.3 160.4 160.5 SM4500P-E	Frequency: 1 with each batch of samples processed not to exceed 10 samples Criteria: Sample results should agree within 20% if both the sample and sample duplicate results are > 5 X RL Corrective Action: Flag data outside of limit	—	N/A

INORGANIC LABORATORY QUALITY CONTROL SAMPLES (Cont'd)

Analysis	QC Sample	Method	NPDES [1]	Method	RCRA (SW846) [2]
Sulfate	* Method Blank	300.0A[(5)] 375.4	Frequency: 1 with each batch of samples processed not to exceed 20 samples Criteria: Concentration must be less than the reporting limit Corrective Action: Rerun all samples associated with unacceptable blank	9038 9056A	Frequency: 1 with each batch of samples processed not to exceed 20 samples Criteria: Concentration must be less than the reporting limit Corrective Action: Rerun all samples associated with unacceptable blank
	Laboratory Control Sample	300.0A[(5)] 375.4	Frequency: 1 with each batch of samples processed not to exceed 20 samples Criteria: Percent recovery must be within laboratory control limits Corrective Action: If not within laboratory control limits, rerun all associated samples	9038 9056A	Frequency: 1 with each batch of samples processed not to exceed 20 samples Method 9038 Criteria: Percent recovery must be within ± 15 % Method 9056 Criteria: Percent recovery must be within laboratory control limits Corrective Action: Rerun all samples associated with unacceptable LCS (ICV)

INORGANIC LABORATORY QUALITY CONTROL SAMPLES (Cont'd)

Analysis	QC Sample	Method	NPDES [1]	Method	RCRA (SW846) [2]
Sulfate (cont'd)	Matrix Spike	300.0A(5) 375.4	Frequency: 1 per 10 samples, minimum of one per batch of samples processed Criteria: Percent recovery must be within laboratory control limits Corrective Action: Flag data outside of limit	9038 9056A	Frequency: 1 with each batch of samples processed not to exceed 10 samples (9038) or 20 samples (9056) Method 9038 Criteria: Limits are 75% - 125% recovery Method 9056 Criteria: Percent recovery must be within laboratory 0control limits Corrective Action: Flag data associated with unacceptable Matrix Spike
	Matrix Spike Duplicate	300.0A(5) 375.4	Frequency: 1 per 20 samples, minimum of one per batch of samples processed Criteria: Percent recovery must be within laboratory control limits Corrective Action: Flag data outside of limit	9038 9056A	N/A
	Duplicate	300.0A(5) 375.4	N/A	9038 9056A	N/A
Sulfide	* Method Blank	376.1	Frequency: 1 with each batch of samples processed not to exceed 20 samples Criteria: Concentration must be less than the reporting limit Corrective Action: Rerun all samples associated with unacceptable blank	9030A	Frequency: 1 with each batch of samples processed not to exceed 20 samples Criteria: Concentration must be less than the reporting limit Corrective Action: Rerun all samples associated with unacceptable blank

INORGANIC LABORATORY QUALITY CONTROL SAMPLES (Cont'd)

Analysis	QC Sample	Method	NPDES [1]	Method	RCRA (SW846) [2]
Sulfide (Cont'd)	Laboratory Control Sample	376.1	Frequency: 1 with each batch of samples processed not to exceed 20 samples Criteria: Percent recovery must be within laboratory control limits Corrective Action: If not within laboratory control limits, rerun all associated samples	9030A	Frequency: 1 with each batch of samples processed not to exceed 20 samples Criteria: Percent recovery must be within laboratory control limits Corrective Action: Flag associated data
	Matrix Spike	376.1	Frequency: 1 with each batch of samples processed not to exceed 20 samples Criteria: Percent recovery must be within laboratory control limits Corrective Action: Flag data outside of limit	9030A	Frequency: 1 with each batch of samples processed not to exceed 20 samples Criteria: Percent recovery must be within laboratory control limits Corrective Action: Flag associated data
	Matrix Spike Duplicate	376.1	Frequency: 1 with each batch of samples processed not to exceed 20 samples Criteria: Percent recovery must be within laboratory control limits Corrective Action: Flag data outside of limit	9030A	Frequency: 1 with each batch of samples processed not to exceed 20 samples Criteria: Percent recovery must be within laboratory control limits Corrective Action: Flag associated data Method 9034: Not Applicable
	Duplicate	376.1	N/A	9030A	N/A

INORGANIC LABORATORY QUALITY CONTROL SAMPLES (Cont'd)

Analysis	QC Sample	Method	NPDES [1]	Method	RCRA (SW846) [2]
Total Organic Carbon (TOC)	* Method Blank	415.1 SM5310D	Frequency: 1 with each batch of samples processed not to exceed 20 samples Criteria: Concentration must be less than the reporting limit Corrective Action: Rerun all samples associated with unacceptable blank	9060 Walkley-Black	Frequency: 1 with each batch of samples processed not to exceed 20 samples Criteria: Concentration less than reporting limit Corrective Action: Rerun all samples associated with unacceptable blank
	Laboratory Control Sample	415.1 SM5310D	Frequency: 1 with each batch of samples processed not to exceed 20 samples Criteria: Percent recovery must be within laboratory control limits Corrective Action: If not within laboratory control limits, rerun all associated samples	9060 Walkley-Black	Frequency: 1 with each batch of samples processed not to exceed 20 samples Criteria: percent recovery must be within laboratory control limits Corrective Action: Rerun all samples associated with unacceptable LCS
	Matrix Spike	415.1 SM5310D	Frequency: 1 per 20 samples, minimum of one per batch of samples processed Criteria: Percent recovery must be within laboratory control limits Corrective Action: Flag data outside of limit	9060 Walkley-Black	Frequency: 1 with each batch of samples processed not to exceed 20 samples Criteria: Percent recovery must be within laboratory control limits Corrective Action: Reanalyze if sample remaining. If not, flag data associated with unacceptable Matrix Spike

INORGANIC LABORATORY QUALITY CONTROL SAMPLES (Cont'd)

Analysis	QC Sample	Method	NPDES [1]	Method	RCRA (SW846) [2]
Total Organic Carbon (TOC) (cont'd)	Matrix Spike Duplicate	415.1 SM5310D	Frequency: 1 per 20 samples, minimum of one per batch of samples processed Criteria: Percent recovery must be within laboratory control limits Corrective Action: Flag data outside of limit	9060 Walkley-Black	Frequency: 1 with each batch of samples processed not to exceed 20 samples Criteria: Percent recovery must be within laboratory control limits Corrective Action: Reanalyze if sample remaining. If not, flag data associated with unacceptable Matrix Spike Duplicate
	Duplicate	415.1 SM5310D	N/A	9060 Walkley-Black	Not Applicable
Total Organic Halides (TOX)	* Method Blank	450.1 (5)	Frequency: 1 with each set of 8 samples Criteria: Concentration less than reporting limit Corrective Action: Rerun all samples associated with unacceptable blank	9020B	Frequency: Run in duplicate between each group of 8 analytical determinations Criteria: Concentration less than reporting limit or less than 2 X MDL or RL whichever is lower Corrective Action: Rerun all samples associated with unacceptable blank
	Laboratory Control Sample	450.1 (5)	Frequency: 1 with each batch of samples processed not to exceed 20 samples Criteria: Percent recovery of analyte must be within laboratory control limits Corrective Action: Rerun all samples associated with unacceptable LCS (ICV)	9020B	Frequency: 1 with each batch of samples processed not to exceed 20 samples Criteria: Percent recovery of analyte must be within 90-110% Corrective Action: Rerun all samples associated with unacceptable LCS (ICV)

INORGANIC LABORATORY QUALITY CONTROL SAMPLES (Cont'd)

Analysis	QC Sample	Method	NPDES [1]	Method	RCRA (SW846) [2]
Total Organic Halides (TOX) (cont'd)	Matrix Spike	450.1 (5)	Frequency: 1 per 20 samples, minimum of one per batch of samples processed Criteria: Must be within laboratory control limits Corrective Action: Reanalyze if sample remaining. If not, flag data with unacceptable Matrix Spike	9020B	Frequency: 1 per batch of 10 samples Criteria: Must be within laboratory control limits Corrective Action: Flag data associated with unacceptable Matrix Spike SOP NO. CORP-WC-0001
	Matrix Spike Duplicate	450.1(5)	Frequency: 1 per 20 samples, minimum of one per batch of samples processed Criteria: Must be within laboratory control limits Corrective Action: Reanalyze if sample remaining. If not, flag data with unacceptable Matrix Spike	9020B	N/A
	Duplicate	450.1(5)	**N/A**	9020B	N/A
Turbidity	* Method Blank	180.1	Frequency: 1 with each batch of samples processed not to exceed 20 samples Criteria: Concentration must be less than the reporting limit Corrective Action: Rerun all samples associated with unacceptable blank	—	N/A

INORGANIC LABORATORY QUALITY CONTROL SAMPLES (Cont'd)

Analysis	QC Sample	Method	NPDES [1]	Method	RCRA (SW846) [2]
Turbidity (cont'd)	Laboratory Control Sample	180.1	Frequency: 1 with each batch of samples processed not to exceed 20 samples Criteria: Percent recovery must be within laboratory control limits Corrective Action: If not within laboratory control limits, rerun all associated samples	—	N/A
	Matrix Spike	180.1	N/A	—	N/A
	Matrix Spike Duplicate	180.1	N/A	—	N/A
	Duplicate	180.1	Frequency: 1 per 10 samples Criteria: Must be within laboratory QC limits Corrective Action: Flag data outside of limit Not Applicable.	—	N/A
Mercury by CVAA & CVAFS	* Method Blank	200 series 1631E	Frequency: 1 with each batch of samples processed not to exceed 20 samples Criteria: Concentration less than reporting limit Corrective Action: Rerun all samples associated with unacceptable blank SOP CORP-MT-0003. Exception: If blank is above RL, and samples are ND.	7000A series	Frequency: 1 with each batch of samples processed not to exceed 20 samples Criteria: Concentration less than reporting limit Corrective Action: Rerun all samples associated with unacceptable blank SOP CORP-MT-0003. Exception: If blank is above RL and samples are ND.

INORGANIC LABORATORY QUALITY CONTROL SAMPLES (Cont'd)

Analysis	QC Sample	Method	NPDES [1]	Method	RCRA (SW846) [2]
Mercury by CVAA & CVAFS (Cont'd)	Laboratory Control Sample	200 series 1631E	Frequency: 1 with each batch of samples processed not to exceed 20 samples Criteria: percent recovery of analyte must be within ± 20 %. 1631E is +/- 23% Corrective Action: Rerun all samples associated with unacceptable LCS SOP CORP-MT-0003. Exception: If samples are ND, results are reported.	7000A series	Frequency: 1 with each batch of samples processed not to exceed 20 samples Criteria: percent recovery of analyte must be within ± 20 % Corrective Action: Rerun all samples associated with unacceptable LCS SOP CORP-MT-0003. Exception: If samples are ND, results are reported.
	Matrix Spike	200 series 1631E	Frequency: with each batch of samples processed not to exceed 20 samples. 1631E frequency is 1 in 10 samples, 71-125% Criteria: Recovery should be within 75-125 % Corrective Action: Flag data associated with unacceptable MS. (See SOP CORP-MT-0003 for detailed corrective action procedure and for other QC procedures.)	7000A series	Frequency: 1 with each batch of samples processed not to exceed 20 samples Criteria: Recovery should be within 75-125 % Corrective Action: Flag data associated with unacceptable MS. (See SOP CORP-MT-0003 for detailed corrective action procedure and for other QC procedures.)
	Matrix Spike Duplicate	200 series 1631E	Frequency: 1 with each batch of samples processed not to exceed 20 samples. 1631E frequency is 1 in 10 samples, 71-125% RPD 24% Criteria: Recovery should be within 75-125 % , RPD(3) should be within 20% Corrective Action: Flag data associated with unacceptable MSD SOP CORP-MT-0003	7000A series	Frequency: 1 with each batch of samples processed not to exceed 20 samples Criteria: Recovery should be within 75-125 % , RPD(3) should be within 20% Corrective Action: Flag data associated with unacceptable MSD SOP CORP-MT-0003

INORGANIC LABORATORY QUALITY CONTROL SAMPLES (Cont'd)

Analysis	QC Sample	Method	NPDES [1]	Method	RCRA (SW846) [2]
Mercury by CVAA & CVAFS (Cont'd)	Duplicate	200 series 1631E	N/A	7000A series	N/A
ICP Metals	* Method Blank	200.7 200.8	Frequency: 1 with each batch of samples processed not to exceed 20 samples Criteria: Concentration less than reporting limit. Concentration less than reporting with the exception of lab common contaminants. Sample results <RL are also valid. Corrective Action: Rerun all samples associated with unacceptable blank SOP CORP-MT-0001	6010B 6020	Frequency: 1 with each batch of samples processed not to exceed 20 samples Criteria: Concentration less than reporting limit. Concentration less than reporting with the exception of lab common contaminants. Sample results <RL are also valid. Corrective Action: Rerun all samples associated with unacceptable blank SOP CORP-MT-0001
	Laboratory Control Sample	200.7 200.8	Frequency: 1 with each batch of samples processed not to exceed 20 samples Criteria: percent recovery of analyte must be ± 85-115%. If LCS is biased high and samples are <RL, the results are valid. Corrective Action: Rerun all samples associated with unacceptable LCS SOP CORP-MT-0001	6010B 6020	Frequency: 1 with each batch of samples processed not to exceed 20 samples Criteria: percent recovery of analyte must be ± 20 %. If LCS is biased high and samples are <RL, the results are valid. Corrective Action: Rerun all samples associated with unacceptable LCS SOP CORP-MT-0001. If samples are ND, results are reported.

INORGANIC LABORATORY QUALITY CONTROL SAMPLES (Cont'd)

Analysis	QC Sample	Method	NPDES [1]	Method	RCRA (SW846) [2]
ICP Metals (Cont'd)	Matrix Spike	200.7 200.8	Frequency: 1 with each batch of samples processed not to exceed 20 samples Criteria: Limits for percent recovery are 75-125% Corrective Action: Flag data associated with unacceptable Matrix Spike SOP CORP-MT-0001	6010B 6020	Frequency: 1 with each batch of samples processed not to exceed 20 samples Criteria: Limits for percent recovery are 75-125% Corrective Action: Flag data associated with unacceptable Matrix Spike SOP CORP-MT-0001
	Matrix Spike Duplicate	200.7 200.8	Frequency: 1 with each batch of samples processed not to exceed 20 samples Criteria: Limits for percent recovery are 75-125%, RPD(3) must be within 20% Corrective Action: Flag data associated with unacceptable Matrix Spike SOP CORP-MT-0001	6010B 6020	Frequency: 1 with each batch of samples processed not to exceed 20 samples Criteria: Limits for percent recovery are 75-125%, RPD(3) must be within 20% Corrective Action: Flag data associated with unacceptable Matrix Spike SOP CORP-MT-0001
	Duplicate	200.7 200.8	Not Applicable	6010B 6020	Not Applicable
	Serial Dilution	200.7 200.8	Frequency: 1 with each batch of samples processed not to exceed 20 samples Criteria: 10% difference. 10% difference only applied if sample results are >50 times IDL. Corrective Action: Flag data associated with unacceptable Serial Dilution SOP CORP-MT-0001	6010B 6020	Frequency: 1 with each batch of samples processed not to exceed 20 samples Criteria: 10% difference. 10% difference only applied if sample results are >50 times IDL. Corrective Action: Flag data associated with unacceptable Serial Dilution SOP CORP-MT-0001

INORGANIC LABORATORY QUALITY CONTROL SAMPLES (Cont'd)

Footnotes

[1] National Pollutant Discharge Elimination System

[2] Resource Conservation and Recovery Act, Test Methods for Evaluating Solid Waste, Physical/Chemical Methods, (SW-846), Third Edition, September 1986. Contains Final Update I (July 1992), Final Update IIA (August 1993), Final Update II (September 1994), Final Update IIB (January 1995), and Final Update III (December 1996).

[3] RPD-Relative Percent Difference

[4] Orthophosphate only

[5] Method not listed in 40 CFR Part 136. Method 300.0 is a proposed 40CFR method. Specific state and/or region approval is required for NPDES.

[6] Current promulgated method is a Guidance Method Only, SW-846, Final Update III, Rev.3, 12/96.

ORGANIC LABORATORY QUALITY CONTROL SAMPLES

Analysis	QC Sample	Method	NPDES [1]	Method	RCRA (SW846) [2]
Aromatic Volatiles by GC	* Method Blank	602	Frequency: 1 with each batch of samples processed not to exceed 20 samples Criteria: Concentration less than reporting limit Corrective Action: Rerun all samples associated with unacceptable blank	8021B	Frequency: 1 with each batch of samples processed not to exceed 20 samples Criteria: Concentration less than reporting limit Corrective Action: Rerun all samples associated with unacceptable blank
	Laboratory Control Sample	602	Frequency: 1 with each batch of samples processed not to exceed 20 samples Criteria: percent recovery must be within acceptance limits given in method for each analyte Corrective Action: Rerun all samples associated with unacceptable LCS	8021B	Frequency: 1 with each batch of samples processed not to exceed 20 samples Criteria: percent recovery for each analyte must be within laboratory acceptance limits Corrective Action: Rerun all samples associated with unacceptable LCS
	Matrix Spike	602	Frequency: 1 per 10 samples from each site or 1 per month, whichever is more frequent Criteria: percent recovery for each analyte should be within advisory limits given in method Corrective Action: Flag data associated with unacceptable Matrix Spike	8021B	Frequency: 1 with each batch of samples processed not to exceed 20 samples Criteria: percent recovery for each analyte should be within laboratory acceptance limits Corrective Action: Flag data associated with unacceptable Matrix Spike

ORGANIC LABORATORY QUALITY CONTROL SAMPLES (Cont'd)

Analysis	QC Sample	Method	NPDES [1]	Method	RCRA (SW846) [2]
Aromatic Volatiles by GC (Cont'd)	Matrix Spike Duplicate	602	N/A	8021B	Frequency: 1 with each batch of samples processed not to exceed 20 samples Criteria: percent recovery for each analyte should be within laboratory acceptance limits Corrective Action: Flag data associated with unacceptable Matrix Spike
	Duplicate	602	N/A	8021B	N/A
	Surrogates	602	Surrogates spiked into method blank and all samples (QC included) Method Blank Criteria and LCS: All surrogates must be within laboratory established control limits before sample analysis may proceed. Sample Criteria: Re-extract samples or flag sample data not meeting surrogate criteria	8021B	Surrogates spiked into method blank and all samples (QC included) Method Blank Criteria and LCS: All surrogates must be within laboratory established control limits before sample analysis may proceed. Sample Criteria: Reprepare and reanalyze samples or flag sample data not meeting surrogate criteria
	Internal Standards	602	Optional: Internal standards are added to the method blank and all samples (QC included).	8021B	Optional: Internal standards are added to the method blank and all samples (QC included). If used, same compounds as used for surrogates may be appropriate.

ORGANIC LABORATORY QUALITY CONTROL SAMPLES (Cont'd)

Analysis	QC Sample	Method	NPDES [1]	Method	RCRA (SW846) [2]
Halogenated Volatiles by GC	* Method Blank	--	N/A	8021B	Frequency: 1 with each batch of samples processed not to exceed 20 samples Criteria: Concentration less than reporting limit Corrective Action: Rerun all samples associated with unacceptable blank
	Laboratory Control Sample	--	N/A	8021B	Frequency: 1 with each batch of samples processed not to exceed 20 samples Criteria: percent recovery for each analyte must be within laboratory acceptance limits Corrective Action: Rerun all samples associated with unacceptable LCS
	Matrix Spike	--	N/A	8021B	Frequency: 1 with each batch of samples processed not to exceed 20 samples Criteria: percent recovery for each analyte should be within laboratory acceptance limits Corrective Action: Flag data associated with unacceptable Matrix Spike
	Matrix Spike Duplicate	--	N/A	8021B	Frequency: 1 with each batch of samples processed not to exceed 20 samples Criteria: percent recovery for each analyte should be within laboratory acceptance limits Corrective Action: Flag data associated with unacceptable Matrix Spike

ORGANIC LABORATORY QUALITY CONTROL SAMPLES (Cont'd)

Analysis	QC Sample	Method	NPDES [1]	Method	RCRA (SW846) [2]
Halogenated Volatiles by GC (Cont'd)	Duplicate	--	N/A	8021B	N/A
	Surrogates	--	N/A	8021B	Surrogates spiked into method blank and all samples (QC included) Method Blank Criteria and LCS: All surrogates must be within laboratory established control limits before sample analysis may proceed. Sample Criteria: Reprepare and reanalyze samples or flag sample data not meeting surrogate criteria.
	Internal Standards	--	N/A	8021B	Optional: Internal standards are added to the method blank and all samples (QC included). If used, same compounds as used for surrogates may be appropriate.

ORGANIC LABORATORY QUALITY CONTROL SAMPLES (Cont'd)

Analysis	QC Sample	Method	NPDES [1]	Method	RCRA (SW846) [2]
Herbicides	Laboratory Control Sample	615 [3]	Frequency: 1 with each extraction batch of samples not to exceed 20 samples Criteria: Percent recovery must be within acceptance limits given in method for each analyte Corrective Action: Re-extract all samples associated with unacceptable LCS	8151A	Frequency: 1 with each extraction batch of samples not to exceed 20 samples Criteria: Percent recovery for each analyte must be within laboratory acceptance limits Corrective Action: Re-extract and reanalyze all samples associated with unacceptable LCS
	Matrix Spike	615 [3]	Frequency: 1 per 10 samples from each site or 1 per month, whichever is more frequent Criteria: Percent recovery for each analyte should be within advisory limits given in method Corrective Action: Flag data associated with unacceptable Matrix Spike	8151A	Frequency: 1 with each extraction batch of samples not to exceed 20 samples Criteria: Percent recovery for each analyte should be within laboratory acceptance limits Corrective Action: Flag data associated with unacceptable Matrix Spike
	Matrix Spike Duplicate	615 [3]	N/A	8151A	Frequency: 1 with each extraction batch of samples not to exceed 20 samples Criteria: percent recovery for each analyte should be within laboratory control limits Corrective Action: Flag data associated with unacceptable matrix spike sample

ORGANIC LABORATORY QUALITY CONTROL SAMPLES (Cont'd)

Analysis	QC Sample	Method	NPDES [1]	Method	RCRA (SW846) [2]
Herbicides (cont'd)	Duplicate	615 [3]	N/A	8151A	N/A
	Surrogates	615 [3]	N/A	8151A	Surrogates spiked into method blank and all samples (QC included) Method Blank Criteria and LCS: All surrogates must fall within laboratory established control limits before sample analysis may proceed. Sample Criteria: Re-extract and reanalyze samples or flag sample data not meeting surrogate criteria
	Internal Standards	615 [3]	N/A	8151A	Optional
Pesticides/ PCBs	* Method Blank	608	Frequency: 1 with each extraction batch of samples not to exceed 20 samples Criteria: Concentration less than reporting limit Corrective Action: Rerun all samples associated with unacceptable blank	8081A 8082	Frequency: 1 with each extraction batch of samples not to exceed 20 samples Criteria: Concentration less than reporting limit Corrective Action: Reprepare and reanalyze all samples associated with unacceptable blank

ORGANIC LABORATORY QUALITY CONTROL SAMPLES (Cont'd)

Analysis	QC Sample	Method	NPDES [1]	Method	RCRA (SW846) [2]
Pesticides/ PCBs (Cont'd)	Laboratory Control Sample	608	Frequency: 1 with each extraction batch of samples not to exceed 20 samples Criteria: percent recovery must be within acceptance limits given in method for each analyte Corrective Action: Rerun all samples associated with unacceptable LCS	8081A 8082	Frequency: 1 with each extraction batch of samples not to exceed 20 samples Criteria: percent recovery for each analyte must be within laboratory acceptance limits Corrective Action: Rerun all samples associated with unacceptable LCS
	Matrix Spike	608	Frequency: 1 per 10 samples from each site or 1 per month, whichever is more frequent Criteria: percent recovery for each analyte should be within advisory limits given in method Corrective Action: Flag data associated with unacceptable Matrix Spike	8081A 8082	Frequency: 1 with each extraction batch of samples not to exceed 20 samples Criteria: percent recovery for each analyte should be within laboratory acceptance limits Corrective Action: Flag data associated with unacceptable Matrix Spike

ORGANIC LABORATORY QUALITY CONTROL SAMPLES (Cont'd)

Analysis	QC Sample	Method	NPDES [1]	Method	RCRA (SW846) [2]
Pesticides/ PCBs (cont'd)	Matrix Spike Duplicate	608	N/A	8081A 80882	Frequency: 1 with each extraction batch of samples not to exceed 20 samples Criteria: percent recovery for each analyte should be within laboratory acceptance limits Corrective Action: Flag data associated with unacceptable Matrix Spike
	Duplicate	608	N/A	8081A 8082	N/A
	Surrogates	608	Not specified in method	8081A 8082	Surrogates spiked into method blank and all samples (QC included) Method Blank Criteria and LCS: Results must fall within laboratory established control limits Sample Criteria: Re-extract and reanalyze samples or flag sample data not meeting surrogate criteria
Petroleum Hydro-carbons	* Method Blank	1664A	Frequency: 1 with each preparation batch Criteria: Concentration must be less than the reporting limit Corrective Action: Rerun all samples associated with unacceptable blank	9071B	Frequency: 1 with each preparation batch Criteria: Concentration must be less than the reporting limit Corrective Action: Rerun all samples associated with unacceptable blank

ORGANIC LABORATORY QUALITY CONTROL SAMPLES (Cont'd)

Analysis	QC Sample	Method	NPDES [1]	Method	RCRA (SW846) [2]
Petroleum Hydro-carbons (Cont'd)	Laboratory Control Sample	1664A	Frequency: 1 with each analytical batch Criteria: Waters - See limits in SOP, NC-WC-0084 Soils - Percent recovery must be within laboratory control limits Corrective Action: Rerun all samples associated with unacceptable LCS	9071B	Frequency: 1 with each analytical batch Criteria: Waters - See limits in SOP, NC-WC-0084 Soils - Percent recovery must be within laboratory control limits Corrective Action: Rerun all samples associated with unacceptable LCS
	Matrix Spike	1664A	Frequency: 1 with every 10 samples per site Criteria: See percent recovery limits in SOP, NC-WC-0084 Corrective Action: See SOP, NC-WC-0084	9071B	Frequency: 1 with every 10 samples per site Criteria: See percent recovery limits in SOP, NC-WC-0084 Corrective Action: See SOP, NC-WC-0084
	Matrix Spike Duplicate	1664A	Frequency: 1 with every 20 samples per site Criteria: See percent recovery and RPD limits in SOP, NC-WC-0084 Corrective Action: See NC-WC-0084	9071B	Frequency: 1 with every 10 samples per site Criteria: See percent recovery and RPD limits in SOP, NC-WC-0084 Corrective Action: See NC-WC-0084
	Duplicate	1664A	N/A	9071B	N/A

ORGANIC LABORATORY QUALITY CONTROL SAMPLES (Cont'd)

Analysis	QC Sample	Method	NPDES [1]	Method	RCRA (SW846) [2]
Purgeable Halocarbons by GC	* Method Blank	601	Frequency: 1 with each extraction batch of samples not to exceed 20 samples Criteria: Concentration less than reporting limit Corrective Action: Rerun all samples associated with unacceptable blank	8021B	Frequency: 1 with each extraction batch of samples not to exceed 20 samples Criteria: Concentration less than reporting limit Corrective Action: Rerun all samples associated with unacceptable blank
	Laboratory Control Sample	601	Frequency: 1 with each extraction batch of samples not to exceed 20 samples Criteria: percent recovery must be within acceptance limits given in method for each analyte Corrective Action: Rerun all samples associated with unacceptable LCS	8021B	Frequency: 1 with each extraction batch of samples not to exceed 20 samples Criteria: percent recovery for each analyte must be within laboratory acceptance limits Corrective Action: Rerun all samples associated with unacceptable LCS
	Matrix Spike	601	Frequency: 1 per 10 samples from each site or 1 per month, whichever is more frequent Criteria: percent recovery for each analyte should be within advisory limits given in method Corrective Action: Flag data associated with unacceptable Matrix Spike	8021B	Frequency: 1 with each extraction batch of samples not to exceed 20 samples Criteria: percent recovery for each analyte should be within laboratory acceptance limits Corrective Action: Flag data associated with unacceptable Matrix Spike

ORGANIC LABORATORY QUALITY CONTROL SAMPLES (Cont'd)

Analysis	QC Sample	Method	NPDES [1]	Method	RCRA (SW846) [2]
Purgeable Halocarbons by GC (Cont'd)	Matrix Spike Duplicate	601	N/A	8021B	Frequency: 1 with each extraction batch of samples not to exceed 20 samples Criteria: percent recovery for each analyte should be within laboratory acceptance limits Corrective Action: Flag data associated with unacceptable Matrix Spike
	Duplicate	601	N/A	8021B	N/A
	Surrogates	601	Surrogates spiked into method blank and all samples (QC included) Method Blank Criteria and LCS: All surrogates must be within laboratory established control limits before sample analysis may proceed. Sample Criteria: Re-extract samples or flag sample data not meeting surrogate criteria	8021B	Surrogates spiked into method blank and all samples (QC included) Method Blank Criteria and LCS: All surrogates must be within laboratory established control limits before sample analysis may proceed. Sample Criteria: Re-extract and reanalyze samples or flag sample data not meeting surrogate criteria
	Internal Standards	601	Optional: Internal standards are added to the method blank and all samples (QC included). If used, same compounds as used for surrogates may be appropriate.	8021B	Optional: Internal standards are added to the method blank and all samples (QC included). If used, same compounds as used for surrogates may be appropriate.

ORGANIC LABORATORY QUALITY CONTROL SAMPLES (Cont'd)

Analysis	QC Sample	Method	NPDES [1]	Method	RCRA (SW846) [2]
Semivolatiles	Matrix Spike	625	Frequency: 1 with each extraction batch of samples not to exceed 20 samples Criteria: percent recovery for each analyte should be within advisory limits given in method Corrective Action: Flag data associated with unacceptable Matrix Spike	8270C	Frequency: 1 with each extraction batch of samples not to exceed 20 samples Criteria: percent recovery for each analyte should be within laboratory acceptance limits Corrective Action: Flag data associated with unacceptable Matrix Spike
	Matrix Spike Duplicate	625	N/A	8270C	Frequency: 1 with each extraction batch of samples not to exceed 20 samples Criteria: percent recovery for each analyte should be within laboratory acceptance limits Corrective Action: Flag data associated with unacceptable Matrix Spike

ORGANIC LABORATORY QUALITY CONTROL SAMPLES (Cont'd)

Analysis	QC Sample	Method	NPDES [1]	Method	RCRA (SW846) [2]
Semivolatiles (Cont'd)	Duplicate	625	N/A	8270C	N/A
	Surrogates	625	Surrogates spiked into method blank and all samples (QC included) Method Blank and LCS Criteria: All surrogates must be in control before sample analysis may proceed. One surrogate per fraction may exceed control limits if greater than 10% recovery. Sample Criteria: Re-extract samples or flag sample data not meeting surrogate criteria	8270C	Surrogates spiked into method blank and all samples (QC included) Method Blank and LCS Criteria: All surrogates must be in control before sample analysis may proceed. One surrogate per fraction may exceed control limits if greater than 10% recovery. Sample Criteria: Re-extract and reanalyze samples or flag sample data not meeting surrogate criteria
	Internal Standards	625	Frequency: Internal standards spiked into method blank and all samples (QC included) Criteria: All internal standard recoveries must be within laboratory control limits Corrective Action: Flag sample data not meeting internal standard recovery requirements	8270C	Internal Standards are added to all samples (QC samples included). Internal standard area of daily standard must be within 50% to 200% of the response in the mid level of the initial calibration standard. The retention time (RT) for any internal standard (IS) in the continuing calibration must not exceed ± 0.5 minutes from mid level initial calibration standard IS RT.

ORGANIC LABORATORY QUALITY CONTROL SAMPLES (Cont'd)

Analysis	QC Sample	Method	NPDES [1]	Method	RCRA (SW846) [2]
Volatiles by GC/MS	* Method Blank	624	Frequency: 1 with each batch of samples processed not to exceed 20 samples Criteria: Concentration less than reporting limit Corrective Action: Rerun all samples associated with unacceptable blank	8260B	Frequency: 1 with each batch of samples processed not to exceed 20 samples Criteria: Concentration less than reporting limit Corrective Action: Rerun all samples associated with unacceptable blank
	Laboratory Control Sample	624	Frequency: 1 with each batch of samples processed not to exceed 20 samples Criteria: percent recovery for each analyte should be within advisory limits given in method Corrective Action: Flag data associated with unacceptable Matrix Spike	8260B	Frequency: 1 with each batch of samples processed not to exceed 20 samples Criteria: percent recovery for each analyte must be within laboratory acceptance limits Corrective Action: Rerun all samples associated with unacceptable LCS

ORGANIC LABORATORY QUALITY CONTROL SAMPLES (Cont'd)

Analysis	QC Sample	Method	NPDES [1]	Method	RCRA (SW846) [2]
Volatiles by GC/MS (Cont'd)	Matrix Spike	624	Frequency: 1 per ≤ 20 samples from each site or 1 per month, whichever is more frequent Criteria: percent recovery for each analyte should be within advisory limits given in method Corrective Action: Flag data associated with unacceptable Matrix Spike	8260B	Frequency: 1 with each batch of samples processed not to exceed 20 samples Criteria: percent recovery for each analyte should be within laboratory acceptance limits Corrective Action: Flag data associated with unacceptable Matrix Spike
	Matrix Spike Duplicate	624	N/A	8260B	Frequency: 1 with each batch of samples processed not to exceed 20 samples Criteria: percent recovery for each analyte should be within laboratory acceptance limits Corrective Action: Flag data associated with unacceptable Matrix Spike
	Duplicate	624	N/A	8260B	N/A

ORGANIC LABORATORY QUALITY CONTROL SAMPLES (Cont'd)

Analysis	QC Sample	Method	NPDES [1]	Method	RCRA (SW846) [2]
Volatiles by GC/MS (cont'd)	Surrogates	624	Surrogates spiked into Method Blank and all samples (QC included) Method Blank Criteria: All surrogates must be in control before sample analysis may proceed. Sample Criteria: Re-extract samples or flag sample data not meeting surrogate criteria	8260B	Surrogates spiked into Method Blank and all samples (QC included) Method Blank Criteria and LCS: All surrogates must be in control before sample analysis may proceed. Sample Criteria: Re-extract and reanalyze samples or flag sample data not meeting surrogate criteria
	Internal Standards	624	Frequency: Internal standards spiked into method blank and all samples (QC included) Criteria: All internal standard recoveries must be within laboratory control limits Corrective Action: Flag sample data not meeting internal standard recovery requirements	8260B	Internal Standards are added to all samples (QC samples included). Internal standard area of daily standard must be within 50% to 200% of the response in the mid level of the initial calibration standard. The retention time (RT) for any internal standard (IS) in the continuing calibration must not exceed ± 0.5 minutes from mid level initial calibration standard IS RT.

Footnotes

[1] National Pollutant Discharge Elimination System

[2] Resource Conservation and Recovery Act, Test Methods for Evaluating Solid Waste, Physical/Chemical Methods, (SW-846), Third Edition, September 1986. Contains Final Update I (July 1992), Final Update IIA (August 1993), Final Update II (September 1994), Final Update IIB (January 1995), and Final Update III (December 1996)

[3] Method not listed in 40 CFR Part 136

.

SECTION 14.0

PREVENTIVE ACTION
(*NELAC 5.4.11)*

14.1 OVERVIEW

The laboratory's preventive action programs improve, or eliminate potential causes of nonconforming product and/or nonconformance to the quality system. This preventive action process is a proactive continuous process improvement activity that can be initiated through feedback from clients, employees, business providers, and affiliates. The QA Department has the overall responsibility to ensure the preventive action process is in place, and that relevant information on actions is submitted for management review.

Dedicating resources to an effective preventive action system emphasizes our TestAmerica North Canton commitment to the Quality Assurance (QA) program. It is beneficial to identify and address negative trends before they develop into complaints, problems and corrective actions. Additionally, customer service and satisfaction can be improved through continuous improvements to laboratory systems.

Opportunities for improvement may be discovered during management reviews, the QA Metrics Report, internal or external audits, proficiency testing performance, client complaints, staff observation, etc.

The monthly Quality Assurance Metrics Report shows performance indicators in all areas of the quality system. These areas include revised reports, corrective actions, audit findings, internal auditing and data authenticity audits, client complaints, PT samples, holding time violations, SOPs, Ethics training, etc. These metrics are used to help evaluate quality system performance on an ongoing basis and provide a tool for identifying areas for improvement.

The laboratory's Corrective Action process (Section 13) is integral to implementation of preventive actions. A critical piece of the corrective action process is the implementation of actions to prevent further occurrence of a non-compliance event. Historical review of corrective action provides a valuable mechanism for identifying preventive action opportunities.

14.1.1 The following elements are part of a preventive action system:

- Identification of an opportunity for preventive action.
- Process for the preventive action.
- Define the measurements of the effectiveness of the process once undertaken.
- Execution of the preventive action.
- Evaluation of the plan using the defined measurements.
- Verification of the effectiveness of the preventive action.
- Close-Out by documenting any permanent changes to the Quality System as a result of the Preventive Action. Documentation of Preventive Action is incorporated into the monthly QA reports, corrective action process, management review, and the Management of Change process (see below).

Note: There may be varying levels of formality and documentation during the preventive action process due to the simplicity/complexity of the action taken.

14.1.2 Any Preventive Actions undertaken or attempted shall be taken into account during the Annual Management Review (Section 17). A highly detailed recap is not required; a simple recount of success and failure within the preventive action program will provide management a measure for evaluation.

14.2 MANAGEMENT OF CHANGE

The Management of Change process is designed to manage significant events and changes that occur within the laboratory. Through these procedures, the potential risks inherent with a new event or change are identified and evaluated. The risks are minimized or eliminated through pre-planning and the development of preventive measures. The types of changes covered under this system include: Facility Changes, Major Accreditation Changes, Addition or Deletion to Division's Capabilities or Instrumentation, Key Personnel Changes, Laboratory Information Management System (LIMS) changes. This process is discussed in further detail in SOP CA-Q-S-003, Management of Change.

SECTION 15.0

CONTROL OF RECORDS
(NELAC 5.4.12)

TestAmerica North Canton maintains a record system appropriate to its needs and that complies with applicable standards or regulations as required. The system produces unequivocal, accurate records that document all laboratory activities. The laboratory retains all original observations, calculations and derived data, calibration records and a copy of the analytical report for a minimum of five years after it has been issued as described in SOP NC-QA-0019, Records Information Management.

15.1 OVERVIEW

The laboratory has established procedures for identification, collection, indexing, access, filing, storage, maintenance and disposal of quality and technical records. A record index is listed in Table 15-1. Quality records are maintained by the Quality Assurance (QA) Manager in a database which is backed up as part of the regular network backup. Records are of two types--either electronic or hard copy paper formats depending on whether the record is computer or hand generated (some records may be in both formats). Technical records are maintained by the Records Manager.

Table 15-1. Record and Retention Schedule

Type of Record	Retention	Disposition
General Laboratory Documents		
Instrument output	5 yrs from project completion	Shred or burn
Quality control data	5 yrs from project completion	Shred or burn
Field sample data	5 yrs from project completion	Shred or burn
Final analytical reports	5 yrs from project completion	Shred or burn
Instrument logbooks	5 yrs from last entry	Shred or burn
Equipment monitoring & maintenance records	5 yrs from last entry	Shred or burn
Instrument calibration records	5 yrs from last entry	Shred or burn
Standard preparation logs	5 yrs from last entry	Shred or burn
Standards certificates	5 yrs from last entry	Shred or burn
Measurement & test equipment logs (e.g., refrig., balances, etc.)	5 yrs from last entry	Shred or burn
Method & instrument validation records	5 yrs from last entry	Shred or burn
Instrument manuals	Retain until superseded	Trash
Project management files	5 yrs from date of archival	Shred or burn
Quotes & proposals	2 yrs from date of expiration	Shred or burn

Type of Record	Retention	Disposition
LQM, policies, & SOPs	5 yrs from date of archiving	Shred or burn
Analyst demonstrations of proficiency	5 yrs from date of archival	Shred or burn
Quality assurance audits	5 yrs from last entry	Shred or burn
Certifications & approvals	5 yrs from last entry	Shred or burn
Employee signature list	5 yrs from date of archival	Shred or burn
MDL Studies	5 yrs from last entry	Shred or burn
Performance testing studies	5 yrs from last entry	Shred or burn
QA reports to management	5 yrs from last entry	Shred or burn
Quality control charts	5 yrs from last entry	Shred or burn
Environment, Health and Safety Records		
Medical records	Retain while active & 30 yrs from last entry	Shred or burn
Employee exposure & monitoring records	Retain while active & 30 yrs from last entry	Shred or burn
Workers compensation files & first report of injury	Retain while active & 30 yrs from last entry	Shred or burn
Accident logs (OSHA Form 200)	5 yrs from last entry	Shred or burn
Accident reports	5 yrs from last entry	Shred or burn
Environmental permits	5 yrs from last entry	Shred or burn
Environmental management, e.g., discharge reports	5 yrs from last entry	Shred or burn
Health & safety audits	5 yrs from last entry	Shred or burn
Chemical Hygiene Plan	5yrs from archival	
Safety Inspections	5 yrs from last entry	Shred or burn
TLD exposure records	5 yrs from last entry	Shred or burn
EH&S training	5 yrs from last entry	Shred or burn
Accounting	See Accounting and Controls Procedures Manual	
Administrative		
Personnel records (not including medical or disability records)	7 years from last entry	Shred or burn

All records are legible and stored and retained in such a way that they are secure and readily retrievable at the laboratory facility that provides a suitable environment to prevent damage or deterioration and to prevent loss. Records are maintained for a minimum of five years unless other wise specified by a client or regulatory requirement.

For raw data and project records, record retention shall be calculated from the date the project report is issued. For other records, such as Controlled Documents, QA, or Administrative Records, the retention time is calculated from the date the record is formally retired. Records related to the programs listed in Table 15-2 have lengthier retention requirements and are subject to the requirements in Section 15.1.3. Policy CW-L-P-001, Record Retention, provides additional information on record retention requirements.

15.1.1 Programs with Longer Retention Requirements

Some regulatory programs have longer record retention requirements than the standard record retention time. These are detailed in Table 15-3 with their retention requirements. In these cases, the longer retention requirement is enacted. If special instructions exist such that client data cannot be destroyed prior to notification of the client, the container or box containing that data is marked as to who to contact for authorization prior to destroying the data.

Table 15-2. Special Record Retention Requirements

Program	Retention Requirement
Ohio – Drinking Water	10 years
Michigan Department of Environmental Quality – all environmental data	10 years
Navy Facilities Engineering Service Center (NFESC)	10 years
OSHA - 40 CFR Part 1910	30 years
TSCA - 40 CFR Part 792	10 years after publication of final test rule or negotiated test agreement and others as negotiated.
Ohio Voluntary Action Program	10 years

15.1.2 All records are held secure and in confidence. Records maintained at the laboratory are located in the Records Storage area of the Warehouse. Records archived off-site are stored in a secure location where a record is maintained of any entry into the storage facility. Logs are maintained in each storage box to note removal and return of records.

15.1.3 The laboratory has procedures to protect and back-up records stored electronically and to prevent unauthorized access to or amendment of these records. All analytical data is

maintained as hardcopy or in a secure readable electronic format. For analytical reports that are maintained as copies in PDF format, see Section 20.12.1, Computer and Electronic Data Related Requirements, for more information.

15.1.4 The record-keeping system allows for historical reconstruction of all laboratory activities that produced the analytical data, as well as rapid recovery of historical data. (Records stored off site should be accessible within two days of a request for such records). The history of the sample from when the laboratory took possession of the samples must be readily understood through the documentation. This shall include inter-laboratory transfers of samples and/or extracts.

- The records include the identity of personnel involved in sampling, sample receipt, preparation, or testing. All analytical work contains the initials (at least) of the personnel involved. The laboratory copy of the Chain-of-Custody is stored with the invoice and the Work Order sheet generated by LIMS. The Chain-of-Custody would indicate the name of the sampler. If any sampling notes are provided with a Work Order, they are kept with this package.

- All information relating to the laboratory facilities equipment, analytical test methods, and related laboratory activities, such as sample receipt, sample preparation, or data verification are documented.

- The record-keeping system facilitates the retrieval of all working files and archived records for inspection and verification purposes, e.g., set format for naming electronic files, set format for what is included with a given analytical data set. SOP NC-QA-0019, Records Information Management, outlines this procedure. Instrument data is stored sequentially by instrument. A given day's analyses are maintained in the order of the analysis. Run logs are maintained for each instrument or method; a copy of each day's run long or instrument sequence is stored with the data to aid in re-constructing an analytical sequence. Where an analysis is performed without an instrument, bound logbooks or bench sheets are used to record and file data. Standard and reagent information is recorded in logbooks or entered into the LIMS for each method as required.

- Changes to hardcopy records shall follow the procedures outlined in Section 13 and 20. Changes to electronic records in LIMS or instrument data are recorded in audit trails.

- The reason for a signature or initials on a document is clearly indicated in the records such as "Sampled by," "Prepared by," "Reviewed by", or "Analyzed by".

- All generated data except those that are generated by automated data collection systems, are recorded directly, promptly and legibly in permanent dark ink.

- Hard copy data may be scanned into PDF format for record storage as long as the scanning process can be verified in order to ensure that no data is lost, and the data files and storage media must be tested to verify the laboratory's ability to retrieve the information prior to the destruction of the hard copy which was scanned.

- Also refer to Section 20.13.1, "Computer and Electronic Data Related Requirements".

15.2 TECHNICAL AND ANALYTICAL RECORDS

15.2.1 The laboratory retains records of original observations, derived data and sufficient information to establish an audit trail, calibration records, staff records and a copy of each analytical report issued, for a minimum of five years unless otherwise specified by a client or regulatory requirement (refer to Section 15.1). The records for each analysis shall contain sufficient information to enable the analysis to be repeated under conditions as close as possible to the original. The records shall include the identity of laboratory personnel responsible for sample preparation, performance of each analysis and checking of results.

15.2.2 Observations, data and calculations are recorded at the time they are made and are identifiable to the specific task.

15.2.3 Changes to hardcopy records shall follow the procedures outlined in Sections 13 and 20. Changes to electronic records in LIMS or instrument data are recorded in audit trails.
The essential information to be associated with analysis, such as strip charts, tabular printouts, computer data files, analytical notebooks, and run logs, include (previous discussions relate where most of this information is maintained – specifics may be added below):

- Laboratory sample ID code
- Date of analysis and time of analysis is required if the holding time is seventy-two (72) hours or less, or when time critical steps are included in the analysis (e.g., drying times, incubations, etc.); instrumental analyses have the date and time of analysis recorded as part of their general operations. Where a time critical step exists in an analysis, location for such a time is included as part of the documentation in a specific logbook or on a benchsheet.
- Instrumentation identification and instrument operating conditions/parameters. Operating conditions/parameters are typically recorded in instrument maintenance logs where available. Instrument logs may be in electronic format.
- analysis type
- all manual calculations and manual integrations
- analyst or operator initials/signature
- sample preparation
- test results
- standard and reagent origin, receipt, preparation, and use
- calibration criteria, frequency and acceptance criteria
- data and statistical calculations, review, confirmation, interpretation, assessment and reporting conventions
- quality control protocols and assessment
- electronic data security, software documentation and verification, software and hardware audits, backups, and records of any changes to automated data entries
- Method performance criteria including expected quality control requirements. These are indicated both in the LIMS and on specific analytical report formats.

15.3 LABORATORY SUPPORT ACTIVITIES

In addition to documenting all the above-mentioned activities, the following are retained QA records and project records (previous discussions in this section relate where and how these data are stored):

- all original raw data, whether hard copy or electronic, for calibrations, samples and quality control measures, including analysts' work sheets and data output records (chromatograms, strip charts, and other instrument response readout records);
- a written description or reference to the specific test method used which includes a description of the specific computational steps used to translate parametric observations into a reportable analytical value;
- copies of final reports;
- archived SOPs;
- correspondence relating to laboratory activities for a specific project;
- all corrective action reports, audits and audit responses;
- proficiency test results and raw data; and
- results of data review, verification, and crosschecking procedures

15.3.1 Sample Handling Records

Sample handling and tracking is discussed in Section 24. Records of all procedures to which a sample is subjected while in the possession of the laboratory are maintained. These include but are not limited to records pertaining to:

- sample preservation including appropriateness of sample container and compliance with holding time requirement;
- sample identification, receipt, acceptance or rejection and login;
- sample storage and tracking including shipping receipts, sample transmittal / COC forms; and
- procedures for the receipt and retention of samples, including all provisions necessary to protect the integrity of samples.

15.4 ADMINISTRATIVE RECORDS

The laboratory also maintains the administrative records in either electronic or hardcopy form (see Table 15-1).

15.5 RECORDS MANAGEMENT, STORAGE AND DISPOSAL

15.5.1 All records (including those pertaining to test equipment), certificates and reports are safely stored, held secure, and in confidence to the client. Certification-related records are available to the accrediting body upon request.

15.5.2 All information necessary for the historical reconstruction of data is maintained by the laboratory. Records that are stored only on electronic media must be supported by the hardware and software necessary for their retrieval.

15.5.3 Records that are stored or generated by computers or personal computers have hardcopy, write-protected backup copies, or an electronic audit trail controlling access**.**

15.5.4 TestAmerica North Canton has a record management system for control of instrument logbooks, standards logbooks, and records for data reduction, validation, storage, and reporting. Benchsheets are filed sequentially per method.

15.5.5 Records are considered archived when moved to Records Storage. Access to archived hard-copy information is documented with an access log and in/out records is used in archived boxes to note data that is removed and returned. All records shall be protected against fire, theft, loss, environmental deterioration, and vermin. In the case of electronic records, electronic or magnetic sources, storage media are protected from deterioration caused by magnetic fields and/or electronic deterioration. Access to the data is limited to laboratory and company employees**.**

15.5.6 In the event that the laboratory transfers ownership or goes out of business, TestAmerica North Canton shall ensure that the records are maintained or transferred according to client's instructions. Upon ownership transfer, record retention requirements shall be addressed in the ownership transfer agreement and the responsibility for maintaining archives is clearly established. In addition, in cases of bankruptcy, appropriate regulatory and state legal requirements concerning laboratory records must be followed. In the event of the closure of the laboratory, all records will revert to the control of the corporate headquarters. Should the entire company cease to exist, as much notice as possible will be given to clients and the accrediting bodies who have worked with the laboratory during the previous five years of such action.

15.5.7 **<u>Records Disposal</u>**

15.5.7.1 Records are removed from the archive and disposed after five years, unless otherwise specified by a client or regulatory requirement. On a project-specific or program basis, clients may need to be notified prior to record destruction. Records are destroyed in a manner that ensures their confidentiality such as shredding, mutilation or incineration.

15.5.7.2 Electronic copies of records must be destroyed by erasure or physically damaging off-line storage media so no records can be read.

15.5.7.3 If a third party records management company is hired to dispose of records, a "Certificate of Destruction" is required. Refer to Policy CW-L-P-001, Records Retention.

SECTION 16

AUDITS
(NELAC 5.4.13)

16.1 OVERVIEW

Audits measure laboratory performance and insure compliance with accreditation/certification and project requirements. Audits specifically provide management with an on-going assessment of the quality of results produced by the laboratory, including how well the policies and procedures of the QA system and the Ethics and Data Integrity Program are being executed. They are also instrumental in identifying areas where improvement in the QA system will increase the reliability of data. There are two principle types of audits: Internal and External. Internal audits are performed by laboratory or corporate personnel. External audits are conducted by regulators, clients or third-party auditing firms. In either case, the assessment to program requirements is the focus.

Table 16-1. Audit Types and Frequency

Internal Audits	Description	Performed by	Frequency
	Analyst & Method Compliance	QA Department or Designee	- 100% of all methods over a two year period. - 100% of all analysts annually.
	Instrument	QA Department or Designee	100% of all organic instruments and any inorganic chromatography instruments. Annually.
	Work Order/ Final Report	QA Department or Designee	- 1 complete report each month.
	Support Systems	QA Department or Designee	- Annual for entire labs support departments & equipment (e.g., thermometers, balances), can be divided into sub-sections over the course of the year.
	Performance Audits (Double-Blind PTs)	Corporate QA, Laboratory QA Department or Designee	- As needed.
	Special	QA Department or Designee	- As Needed
External Audits	**Description**	**Performed by**	**Frequency**
	Program / Method Compliance	Regulatory Agencies, Clients, accreditation organizations	- As required by program and/or clients needs
	Performance Audits	Provided by a third party.	- As required by a client or regulatory agency. Generally provided semi-annually through the analysis of PT samples.

16.2 INTERNAL AUDITS

Annually, the laboratory prepares a schedule of internal audits to be performed throughout the year. As previously stated, these audits verify and monitor that operations continue to comply with the requirements of the laboratory's QA Manual and the Corporate Ethics Program. A

schedule of internal audits is maintained by the QA Manager in the *Internal Audit Workbook*. An example can be found in Figure 16-1.

It is the responsibility of the QA Manager to plan and organize audits in consideration of the laboratory workload and the department personnel schedules so that all pertinent personnel and operations are thoroughly reviewed. When designees (other than QA Department personnel and approved by the QA Manager) perform audits, the QA Manager shall ensure that these persons do not audit their own activities, except when it can be demonstrated that an effective audit will be carried out. In general, the auditor:

- Is neither the person responsible for the process being audited nor the immediate supervisor of the person responsible for the project/process.
- Is free of any conflicts of interest.
- Is free from bias and influences that could affect objectivity.

Laboratory personnel (e.g., supervisors and analysts) may assist with both method and support system audits as long as the items listed in the above paragraph are observed. These audits are conducted according to defined criteria listed in the checklists of the *Internal Audit Workbook.* These personnel must be approved by the QA Manager; and must complete the audit checklists in their entirety. This process introduces analyst experience and insight into the laboratory's auditing program.

The auditor must review the previous audit report and identify all items for verification of corrective actions. A primary focus will be dedicated to the ability of the laboratory to correct root-cause deficiencies and that the corrective action has been implemented and sustained as documented.

16.2.1 Systems

An annual Systems audit is required to ensure compliance to analytical methods and SOPs, laboratory Data Integrity and Ethics Policies, NELAC quality systems, client, and State requirements. This audit is performed in portions throughout the year through method, analyst, instrument, Work Order/Final Report, and support system audits. Audits are documented and reported to management within one week of their performance. Systems audits cover all departments of the facility--both operational and support. The multiple audits are compiled into one systems audit package at the end of the year (*Internal Audit Workbook*).

16.2.1.1 Method, Analyst, Instrument and Work Order/Final Report Audits

Procedures for the method compliance, analyst, instrument and work order/final report audits are incorporated by reference to SOP CA-Q-S-004, Method Compliance and Data Authenticity Audits. These audits are not mutually exclusive. For example, the performance of a method audit will also cover multiple analysts and instruments. The laboratory's goal is to annually review all analysts and instruments as described in SOP CA-Q-S-004. The laboratory will also audit all methods within a two-year time period, and audit a minimum of one Work Order/Final Report from receiving through reporting on a monthly basis.

16.2.1.2 Support Systems

Support system audits are performed to ensure that all departments & ancillary equipment are operating according to prescribed criteria. Support system audits include the review of both non-analytical and operational departments. Support equipment audits, e.g., metrology items, include the review of balance calibrations, weight calibrations; water quality testing, etc.. Non-analytical may include sample receiving and bottle preparation. These types of support audits ensure that the operations are being performed to support ethical data as well as ensuring the accuracy & precision of the utilized equipment.

These audits can be performed in portions throughout the year or in one scheduled session. However, the audit schedule must document that these aspects are reviewed annually. Many of the metrology systems are considered to be surveillance activities that can be monitored by QA personnel or delegated to specified department personnel. These surveillance activities are performed on a semi-annual basis unless issues warrant a greater frequency or previous audits continually showing no deficiencies allow the frequency to be reduced to once a year.

An example audit checklist can be found in Figure 16-2. Instructions for reporting findings are included in the *Internal Audit Workbook*. In general, findings are reported to management within 1 week of the audit and a response is due from management within 30 days.

16.2.2 Performance Audits

Corporate QA may arrange for double blind PT studies to be performed in the laboratories. Results are given to Management and Corrective actions of any findings are coordinated at each facility by the QA Managers and Laboratory Directors/Managers. These studies are performed on an as needed basis. They may be performed when concerns are raised regarding the performance of a particular method in specific laboratories, periodically to evaluate methods that may not normally be covered in the external PT program or may be used in the process of developing best practices. The local QA Manager may also arrange for PT studies on an as needed basis (refer to Section 16.3.2 for additional information on Performance Audits).

16.2.3 Special Audits

Special audits are conducted on an as needed basis, generally as a follow up to specific issues such as client complaints, corrective actions, PT results, data audits, system audits, validation comments, regulatory audits or suspected ethical improprieties. Special audits are focused on a specific issue, and report format, distribution, and timeframes are designed to address the nature of the issue.

16.3 EXTERNAL AUDITS

TestAmerica facilities are routinely audited by clients and external regulatory authorities. External audits are performed when certifying agencies or clients conduct on-site inspections or submit performance testing samples for analysis. It is the TestAmerica policy to cooperate fully with regulatory authorities and clients. The laboratory makes every effort to provide the auditors with access to personnel, documentation, and assistance. The Laboratory Supervisors are responsible for providing corrective actions to the QA Manager who coordinates the response for any deficiencies discovered during an external audit. Audit responses are due in the time allotted by the client or agency performing the audit. This time frame is generally 30 days.

Be aware that NELAC requires that the audit response report be acceptable to the primary accrediting authority after the second submittal. The lab shall have accreditation revoked for all or any portion of its scope of an accreditation for any or all fields of testing, a method, or analyte within a field of testing if it is not corrected.

TestAmerica North Canton cooperates with clients and their representatives to monitor laboratory performance in relation to work performed for the client. The client may only view data and systems related directly to the client's work. All efforts are made to keep other client information confidential.

16.3.1 Confidential Business Information (CBI) Considerations

During on-site audits, on-site auditors may come into possession of information claimed as business confidential. A business confidentiality claim is defined as "a claim or allegation that business information is entitled to confidential treatment for reasons of business confidentiality or a request for a determination that such information is entitled to such treatment." When information is claimed as business confidential, the laboratory must place on (or attach to) the information at the time it is submitted to the auditor, a cover sheet, stamped or typed legend or other suitable form of notice, employing language such as "trade secret", "proprietary" or "company confidential". Confidential portions of documents otherwise non-confidential must be clearly identified. CBI may be purged of references to client identity by the responsible laboratory official at the time of removal from the laboratory. However, sample identifiers may not be obscured from the information. Additional information regarding CBI can be found in within the 2003 NELAC standards.

16.3.2 Performance Audits

The laboratory is involved in performance audits conducted as directed by state agencies through the analysis of PT samples provided by a third party. The laboratory generally participates in the following types of PT studies—water pollution and soil studies.

- It is TestAmerica's policy that PT samples be treated as typical samples in the production process. Further, where PT samples present special or unique problems in the regular production process they may need to be treated differently, as would any special or unique request submitted by any client. The QA Manager must be consulted and in agreement with any decisions made to treat a PT sample differently due to some special circumstance.

- PTs generally do not have holding times associated with them. In the absence of any holding time requirement, it is recommended that the holding time begin when the PT sample is prepared according to the manufacturer's instructions. Holding times should apply to full volume PT samples only if the provider gives a meaningful "sampling date". If this is not provided, it is recommended that the date/time of opening of the full volume sample be considered the beginning of holding time.

- Login will obtain the COC information from the documentation provided with the PTs with review by QA or other designated staff.

- Vials will be prepared as required in the instruction set provided with the samples. After preparation to full volume the sample may be spiked, digested, concentrated, etc., as would be done for any normal sample requiring similar analysis.

- PT samples will not undergo multiple preps, multiple runs, multiple methods (unless being used to evaluate multiple methods), multiple dilutions, UNLESS this is what would be done to a normal client sample. An example of this is if a client requests, as PT clients do, that we split VOA coeluters, then dual analysis IS normal practice.

- The type, composition, concentration and frequency of quality control samples analyzed with the PT samples shall be the same as with routine environmental samples.

- Instructions may be included in the laboratory SOPs on how low-level samples are analyzed, including concentration of the sample or adjustment of the normality of titrant. When a PT sample falls below the range of the routine analytical method, the low-level procedure may be used. Results below the routine reporting limit are reviewed against PT instructions and analyte PT reporting limit values.

- No special reviews shall be performed by operation and QA, UNLESS this is what would be done to a normal client sample. To the degree that special report forms or login procedures are required by the PT supplier, it is reasonable that the laboratory WOULD apply special review procedures, as would be done for any client requesting unusual reporting or login processes.

- Written responses to unacceptable PT results are required. In some cases, it may be necessary for blind QC samples to be submitted to the laboratory to show a return to control.

16.4 AUDIT FINDINGS

Internal or External Audit findings should be documented using the corrective action process. The laboratory is expected to prepare a response to audit findings within 30 days of receipt of an audit report unless the report specifies a different time frame. The response may include action plans that could not be completed within the 30-day timeframe. In these instances, a completion date must be set and agreed to by Operations Management and the QA Manager.

Responsibility for developing and implementing corrective actions to findings is the responsibility of the Group Leader where the finding originated. Findings that are not corrected by specified due dates are reported monthly to management in the QA monthly report.

If any audit finding casts doubt on the effectiveness of the operations or on the correctness or validity of the laboratory's test results, the laboratory must take timely corrective action, and must notify clients in writing if the investigations show that the laboratory results have been affected. Once corrective action is implemented, a follow-up audit is scheduled to ensure that the problem has been corrected.

The procedures must be in accordance to SOP CA-L-S-001, Internal Investigations of Data Discrepancies and Determination of Data Recall.

Clients must be notified promptly in writing, of any event such as the identification of defective measuring or test equipment that casts doubt on the validity of results given in any test report or amendment to a test report. The investigation must begin within 24 hours of discovery of the problem and all efforts are made to notify the client within two weeks after the completion of the investigation.

Figure 16-1.

Example - Internal Audit Workbook

TestAmerica
THE LEADER IN ENVIRONMENTAL TESTING

TestAmerica <Name>
Last Updated: 9/10/2007
Workbook Instruction No. CA-Q-WI-011

Internal Audit Workbook
Summary Page

Note: Click on the (Summary Page) to located on each audit sheet to return to this page.

*** The lab may choose to audit these areas with each method/analyst/instrument audit. The auditor must document on the checklist that this item is audited as part of the <defined> audit.**

	Area Audited	Audit Type	Audit Cycle	Scheduled	Date Audited	Date Closed	Comments
	(Click on the Area to get to that Sprea	heet)					
1	Balances	System	6 mo				
2	Temperature Logs/Thermometers	System	6 mo				
3	Sample Storage and Disposal	System	1 yr				
4	Maintenance Logs *	System	6 mo				
5	Volatile Storage Blanks	System	6 mo				
6	Lab Water Quality Testing	System	6 mo				
7	Sample Log In	System	1 yr				
8	Shipping Procedures	System	1 yr				
9	Computer Operations (LIMS)	System	1 yr	Pending Corp. IT Policies			
10	SOP & Document Distribution System	System	1 yr				
11	Archiving Electronic & Paper Records	System	1 yr	Pending Corp. IT Policies			
12	Statistical Process Control	System	1 yr				
13	Data Review System	System	1 yr				
14	Final Report Generation	System	1 yr				
15	Standards/Reagents *	System	6 mo				
16	Manual Integration *	System	1 yr				
17	Corrective Action System	System	1 yr				
18	Training Records	System	6 mo				
19	MDLs	System	1 yr				
20	SOPs - Prep/Review/Update Process	System	1 yr				
21	Purchasing/Procurement	System	1 yr				
22	Eppendorf/Diluter/Dispenser Calibration Check	System	6 mo				
23	Subcontract Lab Approval	System	1 yr				
24	Customer Complaint System	System	1 yr				
25	Methods	Method	2 yr				
	....	....	....				
	.....	....	....				
	.....	....	....				

Figure 16-2.

Example – Internal Audit System Checklist: Corrective Actions

TestAmerica
THE LEADER IN ENVIRONMENTAL TESTING

TestAmerica <Location>

INTERNAL AUDIT - Corrective Actions

(Summary Page)

[Printed Name(s) or Date(s)]

Area Audited:
Auditor:
Date:
Persons Contacted During Audit:

Date Reported to Department Manager:
Reported To:

Date Reported to Lab Director/Manager:
Reported To:

Date Response Due:

Response Received and Accepted by QA Manager:

Associated Corrective Action Report Number(s):

Scheduled Follow-up:

Item	Requirement	Ref.	Y	N	NA	Evidence/Comments	Follow Up
1	Does the laboratory have a corrective action program in place?	5.4.10.1					
2	Does the laboratory have a current corrective action SOP or is this information in the QA Manual?	5.4.10.1					
3	Do all laboratory personnel have documented training and access to initiate corrective actions?	5.4.10.1					
4	Are causes clearly identified by department, staff name, scope of issue (how many reports affected)?	5.4.10.6					
5	Is a root cause for the issue identified?	5.4.10.2					
6	Is a corrective action (plan) clearly described?						
7	Was the corrective action fully implemented?						
8	Is documentation (if applicable) completed as specifed by the corrective action (training, revised SOP, etc)						
9	Has a follow-up assessment been conducted to verify the corrective action was successful?						
10	Are corrective actions reviewed on a regular basis by management?	5.4.10.6a 5					
11	Is there a defined distribution flow for corrective action notification, review, closure, and follow-up?	5.4.10.6a					
12	Are non-conformances reviewed on a regular basis and used, if necessary, to initiate root cause corrective actions?						
13	Does the lab have a documented procedure for QC corrective action (i.e., documented within each method / parameter SOP or in the QA Manual)?	4.10.1					
14	***Verify Corrective Actions from previous systems audits. List Items:***						
15							
16							
17							

Auditor Signature:_____

Primary Reference(s): Corporate SOP CA-Q-S-002, Acceptable Manual Integration Practices
NELAC Standard, June 2003
DoD Quality Systems Manual, Version 3, January 2006
EPA Manual for the Certification of Laboratories Analyzing Drinking Water

SECTION 17

MANAGEMENT REVIEWS
(NELAC 5.4.14)

17.1 QUALITY ASSURANCE REPORT

A comprehensive QA Report shall be prepared each month by the laboratory's QA Department and forwarded to the Laboratory Director/Manager for review and comments. The final report shall be submitted to the Laboratory Director as well as the appropriate Quality Director and General Manager. All aspects of the QA system are reviewed to evaluate the suitability of policies and procedures. At a minimum, the report content will contain the items listed below. During the course of the year, the Laboratory Director/Manager, General Manager or Corporate QA may request that additional information be added to the report.

The TestAmerica QA Report template is comprised of a discussion of three key QA issues facing the laboratory and ten specific sections (Figure 17-1):

- **Metrics:** Describe actions or improvement activities underway to address any outlying quality metrics that have been reported in the monthly Quality System Metrics Table.
- **Quality System Metrics Table:** The report also includes statistical results that are used to assess the effectiveness of the quality system. Effective quality systems are the responsibility of the entire laboratory staff. Each laboratory provides their results in a template provided by Corporate QA (Figure 17-2).
- **SOPs:** Report SOPs that have been finalized and report status of any outstanding SOP reviews.
- **Corrective Actions:** Describe highlights and the most frequent cause for report revisions and corrective/preventive action measures underway. Include a discussion of any recalls handled at the lab level as per Section 6.2.2 in the Investigation/Recall SOP, CA-L-S-001. Include a section for client feedback and complaints. Include both positive and negative feedback. Describe the most serious client complaints and resolutions in progress.
- **MDLs and Control Limits:** Report which MDLs/ MDL verifications are due. Report the same for Control Limits.
- **Audits:** Report Internal and External Audits that were conducted. Include all relevant information such as which methods, by whom, corrective actions needed by when and discuss unresolved audit findings.
- **Performance Testing (PT) Samples:** Report the PT tests that are currently being tested with their due dates, report recent PT results by study, acceptable, total reported and the month and year.
- **Certifications:** Report on any certification programs being worked on by due date, packages completed. Describe any issues, lapses, or potential revocations.
- **Regulatory Updates:** Include information on new state or federal regulations that may impact the laboratory. Report new methods that require new instrumentation, deletion of methods, changes in sampling requirements and frequencies etc…

- **Miscellaneous:** Include any issues that may impact quality within the laboratory.
- **Next Month:** Report on plans for the upcoming month.
- **Lab Director Comments Section:** This section gives the Laboratory Director/Manager the opportunity to comment on issues discussed in the report and to document plans to resolve these issues. Unresolved issues that reappear in subsequent monthly reports must be commented on by the Laboratory Director/Manager.
- **Quality System Metrics Table:** The report also includes statistical results that are used to assess the effectiveness of the quality system. Effective quality systems are the responsibility of the entire laboratory staff. Each laboratory provides their results in a template provided by Corporate QA (Figure 17-2).

On a monthly basis, Corporate QA compiles information from all the monthly laboratory reports. The VP-QA/EHS prepares a report that includes a compilation of all metrics and notable information and concerns regarding the QA programs within the laboratories. The report also includes a listing of new regulations that may potentially impact the laboratories. This report is presented to the Analytical Division Senior Management Team and General Managers.

17.2 ANNUAL MANAGEMENT REVIEW

The Senior Lab Management Team (Laboratory Director, Technical Director, Operations Manager, QA Manager, HR Supervisor, I.T. Supervisor) conducts an annual review of its quality systems and LIMS to ensure its continuing suitability and effectiveness in meeting client and regulatory requirements and to introduce any necessary changes or improvements. Corporate Operations and Corporate QA personnel may be included in this meeting at the discretion of the Laboratory Director/Manager. The LIMS review consists of examining any audits, complaints or concerns that have been raised through the year that are related to the LIMS. The laboratory will summarize any critical findings that cannot be solved by the lab and report them to Corporate IT.

This review uses information generated during the preceding year to assess the “big picture” by ensuring that routine quality actions taken and reviewed on a monthly basis are not components of larger systematic concerns. The monthly review (refer to Section 17.1) should keep the quality systems current and effective, therefore, the annual review is a formal senior management process to review specific existing documentation. Significant issues from the following documentation are compiled or summarized by the QA Manager prior to the review meeting:

- Matters arising from the previous annual review
- Prior Monthly QA Reports issues
- Laboratory QA Metrics
- Review of report reissue requests
- Review of client feedback and complaints
- Issues arising from any prior management or staff meetings
- Minutes from prior Senior Management team meetings. Issues that may be raised from these meetings include:

- Adequacy of staff, equipment and facility resources
- Adequacy of policies and procedures
- Future plans for resources and testing capability and capacity

- The annual internal double blind PT program sample performance (if performed)
- Compliance to the Ethics Policy and Data Integrity Plan, including any evidence/incidents of inappropriate actions or vulnerabilities related to data Integrity.

The annual review includes the previous 12 months. Based on the annual review, a report is generated by the QA Manager and management. The report is distributed to the appropriate General Manager and the Quality Director. The report includes, but is not limited to:

- The date of the review and the names and titles of participants
- A reference to the existing data quality related documents and topics that were reviewed
- Quality system or operational changes or improvements that will be made as a result of the review, e.g., an implementation schedule including assigned responsibilities for the changes (Action Table)

The QA Manual is also reviewed at this time, and revised to reflect any significant changes made to the quality systems.

17.3 POTENTIAL INTEGRITY RELATED MANAGERIAL REVIEWS

Potential integrity issues (data or business related) must be handled and reviewed in a confidential manner until such time as a follow-up evaluation, full investigation, or other appropriate actions have been completed and issues clarified. The Corporate Data Investigation/ Recall SOP shall be followed (SOP CA-L-S-001). All investigations that result in finding of inappropriate activity are documented and include any disciplinary actions involved, corrective actions taken, and all appropriate notifications of clients.

The Chairman/CEO, President/CEO, COOs, and Quality Directors receive a monthly report from the VP of Quality and EHS summarizing any current data integrity or data recall investigations as described in SOP CA-L-S-001. The General Managers are also made aware of progress on these issues for their specific labs.

Figure 17-1.

Example - QA Monthly Report to Management

LABORATORY: x
PERIOD COVERED: Month/Year
PREPARED BY: x DATE: Month Day, Year
DISTRIBUTED TO: xx (Include LD, GM, QA Director, etc…)

THREE KEY ISSUES FOR MONTH:
Include a discussion of three key issues that were focused in on this month.
1. x
2. x
3. x

---

1. METRICS
Describe actions or improvement activities underway to address any outlying quality metrics.

2. SOPs

See Tab for SOP specifics.

The following SOPs were finalized (or reviewed for accuracy): (See Tab)

The following SOPs are due to QA: xx

In QA to complete: xx

3. CORRECTIVE ACTION

Highlights: xx

Revised Reports:
Describe the most frequent cause for report revisions and corrective/preventive action measures underway.

Data Investigations/Recalls (Corporate Data Investigation/Recall SOP) :
Include a discussion of any recalls handled at the lab level as Corp SOP.

Client Feedback and Complaints:
Include both positive and negative feedback.

Describe the most serious client complaints) and resolutions in progress.

4. MDLs AND CONTROL LIMITS

MDLs Due:

Control Limits Due:

5. AUDITS

INTERNAL AUDITS

Discuss Any Outstanding Issues (or Attach Summary):

EXTERNAL AUDITS
Discuss Any Outstanding Issues (or Attach Summary):

6. PT SAMPLES

The following PT samples are now in house (Due Dates):
xx

7. CERTIFICATIONS

Certification Packages Being Worked On (Include Due Date):
x

Describe any issues, lapses, or potential revocations.

8. REGULATORY UPDATE
Include information on new state or federal regulations that may impact the laboratory – new methods that require new instrumentation, deletion of methods, changes in sampling requirements or frequencies, …

9. MISCELLANEOUS
Include any issues that may impact quality within the laboratory.

10. NEXT MONTH
Items planned for next month.

LAB DIRECTOR COMMENTS AND PLANNED CORRECTIVE ACTIONS:	
LAB DIRECTOR REVIEW:	DATE:

Figure 17-2.

Example - Laboratory Metrics Categories

No. of reports for month
No. of reports revised due to lab error
Percent revised reports
No. of Data Recall Investigations
No. of reports actually recalled
No. of Corrective Action Reports
No. of Corrective Action Reports still open
Total number of unresolved open Corrective Action Reports
Percent of unresolved open Corrective Action Reports
No. of reports independent QA reviewed
Percent QA Data Review: Reports
No. of technical staff (analysts/technicians, including temps)
No. of analyst work product reviewed year-to-date
No. of analytical instruments with electronic data file storage capability
No. of Analytical instruments reviewed for data authenticity year-to-date
Percent Analyst/Instrument Data Authenticity Audits
No. of client complaints
No. of client compliments
No. of planned internal audits
No. of planned internal method audits performed year-to-date
Percent annual Internal Audits complete
No. of open Internal Audit findings past due
Total Number of External Audit findings
No. of open External Audit findings past due
Percent External Audit findings past due
No. of PT analytes participated and received scores
No. of PT analytes not acceptable
Percent PT cumulative score
No. of PT repeat analyte failures cumulative (analyte failed more than once in 4 consecutive studies by PT type--only applies to failed analytes)
No. of SOPs

No. of SOPs reviewed/revised within 24 months
No. of methods or administrative procedures without approved SOPs
SOP status
Method certification losses due to performance/audit issues
Hold Time violations due to lab error
Date of last Comprehensive Ethics Training session
No. of staff that haven't received Comprehensive Ethics Training (>90 days from employment date)
MDL status (good, fair, or poor) >90%, >70%, <70%
Training Documentation Records (good, fair, or poor)
LQM Revision/review date
QAM updated to new integrated template
Last annual Internal Audit date (opened, closed)
Last Management QS Review date
No. of SOPs required for 12-month review cycle (DOD *or drinking water)*
No. of SOPs for 12-month cycle/revised within 12 months *(Includes QS and Methods Listed in QSM)*
12-month percent SOP status *(Includes QS and Methods Listed in QSM)*

SECTION 18

PERSONNEL
(NELAC 5.5.2)

18.1 OVERVIEW

TestAmerica's management believes that its highly qualified and professional staff is the single most important aspect in assuring a high level of data quality and service. The staff consists of professionals and support personnel as outlined in the organization chart in Appendix 2.

All personnel must demonstrate competence in the areas where they have responsibility. Any staff that is undergoing training shall have appropriate supervision until they have demonstrated their ability to perform their job function on their own. Staff shall be qualified for their tasks based on appropriate education, training, experience and/or demonstrated skills as required.

The laboratory employs sufficient personnel with the necessary education, training, technical knowledge and experience for their assigned responsibilities.

All personnel are responsible for complying with all QA/QC requirements that pertain to the laboratory and their area of responsibility. Each staff member must have a combination of experience and education to adequately demonstrate a specific knowledge of their particular area of responsibility. Technical staff must also have a general knowledge of lab operations, test methods, QA/QC procedures and records management.

Laboratory management is responsible for formulating goals for lab staff with respect to education, training and skills and ensuring that the laboratory has a policy and procedures for identifying training needs and providing training of personnel. The training shall be relevant to the present and anticipated responsibilities of the lab staff.

The laboratory only uses personnel that are employed by or under contract to, the laboratory. Contracted personnel, when used, must meet competency standards of the laboratory and work in accordance to the laboratory's quality system.

18.2 EDUCATION AND EXPERIENCE REQUIREMENTS FOR TECHNICAL PERSONNEL

TestAmerica makes every effort to hire analytical staff that posses a college degree (AA, BA, BS) in an applied science with some chemistry in the curriculum. Exceptions can be made based upon the individual's experience and ability to learn. There are competent analysts and technicians in the industry who have not earned a college degree. Selection of qualified candidates for laboratory employment begins with documentation of minimum education, training, and experience prerequisites needed to perform the prescribed task. Minimum education and training requirements for TestAmerica employees are outlined in job descriptions and are generally summarized for analytical staff in the table below.

The laboratory maintains job descriptions for all personnel who manage, perform or verify work affecting the quality of the environmental testing the laboratory performs. Job Descriptions are

located on the TestAmerica intranet "Human Resources" web-page (also see Section 4 for position descriptions/responsibilities).

Experience and specialized training are occasionally accepted in lieu of a college degree (basic lab skills such as using a balance, colony counting, aseptic or quantitation techniques, etc. are also considered

As a general rule for analytical staff:

Specialty	Education	Experience
Extractions, Digestions, some electrode methods (pH, DO, Redox, etc.), or Titrimetric and Gravimetric Analyses	H.S. Diploma	On the job training (OJT)
GFAA, CVAA, FLAA, Single component or short list Chromatography (e.g., Fuels, BTEX-GC, IC	A college degree in an applied science or 2 years of college and at least 1 year of college chemistry	Or 2 years prior analytical experience is required
ICP, ICPMS, Long List or complex chromatography (e.g., Pesticides, PCB, Herbicides, HPLC, etc.), GCMS	A college degree in an applied science or 2 years of college chemistry	or 5 years of prior analytical experience
Spectra Interpretation	A college degree in an applied science or 2 years of college chemistry	And 2 years relevant experience Or 5 years of prior analytical experience
Technical Directors/Department Managers – **General**	Bachelors Degree in an applied science or engineering with 24 semester hours in chemistry An advanced (MS, PhD.) degree may substitute for one year of experience	And 2 years experience in environmental analysis of representative analytes for which they will oversee
Technical Director – **Wet Chem** only (no advanced instrumentation)	Associate degree in an applied science or engineering or 2 years of college with 16 semester hours in chemistry	And 2 years relevant experience

Specialty	Education	Experience
Technical Director - Microbiology	Bachelors degree in applied science with at least 16 semester hours in general microbiology and biology An advanced (MS, PhD.) degree may substitute for one year of experience	And 2 years of relevant experience

When an analyst does not meet these requirements, they can perform a task under the direct supervision of a qualified analyst, peer reviewer or Department Manager, and are considered an analyst in training. The person supervising an analyst in training is accountable for the quality of the analytical data and must review and approve data and associated corrective actions.

18.3 TRAINING

TestAmerica is committed to furthering the professional and technical development of employees at all levels.

Orientation to the laboratory's policies and procedures, in-house method training, and employee attendance at outside training courses and conferences all contribute toward employee proficiency. Below are examples of various areas of required employee training:

Required Training	Time Frame*	Employee Type
New Hire Orientation	Immediately	All
Environmental Health & Safety Orientation	Day of hire	All
Environmental Health & Safety Orientation Follow-up Test	30-60 days after hire	All
Environmental Health & Safety Training	Refer to EH&S Manual	All
Ethics – New Hires	1 week of hire	All
Ethics - Comprehensive	90 days of hire	All
Data Integrity	30 days of hire	Technical and PMs
Quality Assurance	90 days of hire	All
Ethics – Comprehensive Refresher	Annually	All
Initial Demonstration of Capability (DOC)	Prior to unsupervised method performance	Technical

The laboratory maintains records of relevant authorization/competence, education, professional qualifications, training, skills and experience of technical personnel (including contracted personnel) as well as the date that approval/authorization was given. These records are kept on file at the laboratory. Also refer to "Demonstration of Capability" in Section 20.

The training of technical staff is kept up to date by:

- Each employee must have documentation in their training file that they have read, understood and agreed to follow the most recent version of the laboratory QA Manual and SOPs in their area of responsibility. This documentation is updated as SOPs are updated.
- Documentation from any training courses or workshops on specific equipment, analytical techniques or other relevant topics are maintained in the employee's training file.
- Documentation of proficiency (refer to Section 20).
- An Ethics Agreement signed by each staff member (renewed each year) and evidence of annual ethics training.
- A Confidentiality Agreement signed by each staff member signed at the time of employment.
- Human Resources maintains documentation and attestation forms on employment status & records; benefit programs; timekeeping/payroll; and employee conduct, e.g., ethics. This information is maintained in the employee's secured personnel file.

Further details of the laboratory's training program are described in the Laboratory Training SOP CORP-QA-0013, Employee Orientation and Training.

18.4 DATA INTEGRITY AND ETHICS TRAINING PROGRAM

Establishing and maintaining a high ethical standard is an important element of a Quality System. Ethics and data integrity training is integral to the success of TestAmerica and is provided for each employee at TestAmerica. It is a formal part of the initial employee orientation within 1 week of hire, comprehensive training within 90 days, and an annual refresher for all employees. Senior management at each facility performs the ethics training for their staff.

In order to ensure that all personnel understand the importance TestAmerica places on maintaining high ethical standards at all times, TestAmerica has established an Ethics Policy CA-L-P-001 and an Ethics Statement/Agreement (Appendix 1). All initial and annual training is documented by signature on the signed Ethics Statement/Agreement demonstrating that the employee has participated in the training and understands their obligations related to ethical behavior and data integrity.

Violations of this Ethics Policy will not be tolerated. Employees who violate this policy will be subject to disciplinary actions up to and including termination. Criminal violations may also be referred to the Government for prosecution. In addition, such actions could jeopardize TestAmerica's ability to do work on Government contracts; and for that reason, TestAmerica has a zero tolerance approach to such violations.

Employees are trained as to the legal and environmental repercussions that result from data misrepresentation. Key topics covered in the presentation include:

- Organizational mission and its relationship to the critical need for honesty and full disclosure in all analytical reporting
- Ethics Policy (Appendix 1)
- How and when to report ethical/data integrity issues. Confidential reporting.

- Record keeping
- Discussion regarding data integrity procedures
- Specific examples of breaches of ethical behavior--peak shaving, altering data or computer clocks, improper macros, etc., accepting/offering kickbacks, illegal accounting practices, unfair competition/collusion
- Internal monitoring. Investigations and data recalls
- Consequences for infractions including potential for immediate termination, debarment, or criminal prosecution
- Importance of proper written narration / data qualification by the analyst and project manager with respect to those cases where the data may still be usable but are in one sense or another partially deficient

Additionally, a Data Integrity Hotline (1-800-736-9407) is maintained by TestAmerica and administered by the Corporate Quality Department.

SECTION 19

ACCOMMODATIONS AND ENVIRONMENTAL CONDITIONS
(NELAC 5.5.3)

19.1 OVERVIEW

TestAmerica North Canton is an 11,466 sq ft secure laboratory facility with controlled access and designed to accommodate an efficient workflow and to provide a safe and comfortable work environment for employees. All visitors sign in and are escorted by laboratory personnel. Access is controlled by various measures.

The laboratory is equipped with structural safety features. Each employee is familiar with the location, use, and capabilities of general and specialized safety features associated with their workplace. The laboratory provides and requires the use of protective equipment including safety glasses, protective clothing, gloves, etc. OSHA and other regulatory agency guidelines regarding required amounts of bench and fume hood space, lighting, ventilation (temperature and humidity-controlled), access, and safety equipment are met or exceeded.

Traffic flow through sample preparation and analysis areas is minimized to reduce the likelihood of contamination. Adequate floor space and bench top area is provided to allow unencumbered sample preparation and analysis space. Sufficient space is also provided for storage of reagents and media, glassware, and portable equipment. Ample space is also provided for refrigerated sample storage before analysis and archival storage of samples after analysis. Laboratory HVAC and deionized water systems are designed to minimize potential trace contaminants.

The laboratory is separated into specific areas for sample receiving, sample preparation, volatile organic sample analysis, non-volatile organic sample analysis, inorganic sample analysis, and administrative functions.

19.2 ENVIRONMENT

Laboratory accommodation, test areas, energy sources, lighting are adequate to facilitate proper performance of tests. The facility is equipped with heating, ventilation, and air conditioning (HVAC) systems appropriate to the needs of environmental testing performed at this laboratory.

The environment in which these activities are undertaken does not invalidate the results or adversely affect the required accuracy of any measurements.

The laboratory provides for the effective monitoring, control and recording of environmental conditions that may affect the results of environmental tests as required by the relevant specifications, methods, and procedures. Such environmental conditions include humidity, voltage, temperature, and vibration levels in the laboratory. A 225KVA UPS is installed in the main electrical bus to provide at least 15 minutes of backup power in the event of a power failure. This unit also provides voltage and frequency control of lab and office power. A spike/surge arrestor is installed to protect against power surge/sag and lightning strikes. A 30 KW natural gas-fueled backup generator is installed to provide power to the I.T. area in the event of a power failure. Additionally, this generator provides power to two walk-in sample

storage coolers and several other smaller sample storage coolers. Smaller portable generators are available to provide "spot power" where needed in the event of a power failure.

When any of the method or regulatory required environmental conditions change to a point where they may adversely affect test results, analytical testing will be discontinued until the environmental conditions are returned to the required levels (refer to Section 12).

Environmental conditions of the facility housing the computer network and LIMS are regulated to protect against raw data loss.

19.3 WORK AREAS

There is effective separation between neighboring areas when the activities therein are incompatible with each other. Examples include:

- Volatile organic chemical handling areas, including sample preparation and waste disposal, and volatile organic chemical analysis areas.

Access to and use of all areas affecting the quality of analytical testing is defined and controlled by secure access to the laboratory building as described below in the Building Security section.

Adequate measures are taken to ensure good housekeeping in the laboratory and to ensure that any contamination does not adversely affect data quality. These measures include regular cleaning to control dirt and dust within the laboratory.

Work areas are available to ensure an unencumbered work area. Work areas include:

- Access and entryways to the laboratory.
- Sample receipt areas.
- Sample storage areas.
- Chemical and waste storage areas.
- Data handling and storage areas.
- Sample processing areas.
- Sample analysis areas.

19.4 FLOOR PLAN

A floor plan can be found in Appendix 3.

19.5 BUILDING SECURITY

Building keys are distributed to employees as necessary.

Visitors to the laboratory sign in and out in a visitor's logbook. A visitor is defined as any person who visits the laboratory who is not an employee of TestAmerica North Canton. In addition to signing into the laboratory, the Environmental, Health and Safety Manual contains requirements for visitors and vendors. There are specific safety forms that must be reviewed and signed.

Visitors (with the exception of company employees) are escorted by laboratory personnel at all times, or the location of the visitor is noted in the visitor's logbook.

Signs are posted in the laboratory designating employee only areas - "Authorized employees beyond this point".

SECTION 20.0

TEST METHODS AND METHOD VALIDATION
(NELAC 5.5.4)

20.1 OVERVIEW

TestAmerica North Canton uses methods that are appropriate to meet our clients' requirements and that are within the scope of the laboratory's capabilities. These include sampling, handling, transport, storage and preparation of samples; and, where appropriate, an estimation of the measurement of uncertainty as well as statistical techniques for analysis of environmental data.

Instructions are available in the laboratory for the operation of equipment as well as for the handling and preparation of samples. All instructions, Standard Operating Procedures (SOPs), reference methods and manuals relevant to the working of the laboratory are readily available to all staff. Deviations from published methods are documented (with justification) in the laboratory's approved SOPs. SOPs are submitted to clients for review at their request. Significant deviations from published methods require client approval and regulatory approval where applicable.

20.2 STANDARD OPERATING PROCEDURES (SOPs)

TestAmerica North Canton maintains SOPs that accurately reflect all phases of the laboratory such as assessing data integrity, corrective actions, handling customer complaints as well as all analytical methods and sampling procedures. The method SOPs are derived from the most recently promulgated/approved, published methods and are specifically adapted to the laboratory facility. Modifications or clarifications to published methods are clearly noted in the SOPs. All SOPs are controlled in the laboratory (refer to Section 6 on Document Control):

- All SOPs contain a revision number, effective date, and appropriate approval signatures. Controlled copies are available to all staff.
- Procedures for preparation, review, revision, and control are incorporated by reference to SOP CW-Q-S-002, Writing a Standard Operating Procedure (SOP), and SOP NC-QA-0027, Preparation and Management of Standard Operating Procedures.
- SOPs are reviewed at a minimum of every two years (annually for Drinking Water and DoD SOPs); and where necessary, revised to ensure continuing suitability and compliance with applicable requirements.

20.3 LABORATORY METHODS MANUAL

For each test method, the laboratory shall have available the published referenced method as well as the laboratory developed SOP. Refer to the corporate SOP CW-Q-S-002, Writing a Standard Operating Procedure, and SOP NC-QA-0027, Preparation and Management of Standard Operating Procedures, for content and requirements of technical and non-technical SOPs.

Note: If more stringent standards or requirements are included in a mandated test method or regulation than those specified in this manual, the laboratory shall demonstrate that such requirements are met. If it is not clear which requirements are more stringent, the standard from

the method or regulation is to be followed. Any exceptions or deviations from the referenced methods or regulations are noted in the specific analytical SOP.

20.4 SELECTION OF METHODS

Since numerous methods and analytical techniques are available, continued communication between the client and laboratory is imperative to assure the correct methods are utilized. Once client methodology requirements are established, this and other pertinent information is summarized by the Project Manager. These mechanisms ensure that the proper analytical methods are applied when the samples arrive for log-in. For non-routine analytical services, e.g., special matrices, non-routine compound lists, etc., the method of choice is selected based on client needs and available technology. The methods selected should be capable of measuring the specific parameter of interest, in the concentration range of interest, and with the required precision and accuracy.

20.4.1 Sources of Methods

Routine analytical services are performed using standard EPA-approved methodology. In some cases, modification of standard approved methods may be necessary to provide accurate analyses of particularly complex matrices. When the use of specific methods for sample analysis is mandated through project or regulatory requirements, only those methods shall be used.

In general, TestAmerica North Canton follows procedures from the referenced methods shown below in Section 20.3.1.4.

When clients do not specify the method to be used or methods are not required, the methods used will be clearly validated and documented in an SOP and available to clients and/or the end user of the data.

20.4.1.1 The analytical methods used by the laboratory are those currently accepted and approved by the U. S. EPA and the state or territory from which the samples were collected. Reference methods include:

- *Method 1664, Revision A: N-Hexane Extractable Material (HEM; Oil and Grease) and Silica Gel Treated N-Hexane Extractable Material (SGT-HEM); Non-polar Material) by Extraction and Gravimetry, EPA-821-R-98-002, February 1999*
- *Guidelines Establishing Test Procedures for the Analysis of Pollutants Under the Clean Water Act, and Appendix A-C; 40 CFR Part 136, USEPA Office of Water. Revised as of July 1, 1995, Appendix A to Part 136 - Methods for Organic Chemical Analysis of Municipal and Industrial Wastewater (EPA 600 Series)*
- *Methods for Chemical Analysis of Water and Wastes, EPA 600 (4-79-020), 1983.*
- *Methods for the Determination of Inorganic Substances in Environmental Samples, EPA-600/R-93/100, August 1993.*
- *Methods for the Determination of Metals in Environmental Samples, EPA/600/4-91/010, June 1991. Supplement I: EPA-600/R-94/111, May 1994.*

- *Standard Methods for the Examination of Water and Wastewater, 18th/19th /20th edition; Eaton, A.D. Clesceri, L.S. Greenberg, A.E. Eds; American Water Works Association, Water Pollution Control Federation, American Public Health Association: Washington, D.C.*
- *Test Methods for Evaluating Solid Waste Physical/Chemical Methods (SW846), Third Edition, September 1986, Final Update I, July 1992, Final Update IIA, August 1993, Final Update II, September 1994; Final Update IIB, January 1995; Final Update III, December 1996.*
- *Annual Book of ASTM Standards, American Society for Testing & Materials (ASTM), Philadelphia, PA.*
- *Code of Federal Regulations (CFR) 40, Parts 136, 141, 172, 173, 178, 179 and 261*

TABLE 20-1. Wet Chemistry Methods [1]

Analytical Parameters	Matrix	Fields of Testing			
			CWA	RCRA (SW846)	Other
Acidity	Water		305. [2] SM 2310 B	--	--
Alkalinity, Bicarbonate, Carbonate	Water		305. [2] SM 2320 B		
	Solid		EPA 310.1[2] (M)	--	--
Arsenic (ASV) Anodic Stripping Voltammetry	Water		--	EPA 7063	--
Ash Content	Solid		--	--	ASTM D29-74
Biochemical Oxygen Demand, Carbonaceous	Water		EPA 405.1 SM 5210 B	--	--
Bromide	Water		EPA 300.0A	EPA 9056A	--
	Waste		EPA 300.0A	EPA 9056A	--
	Solid		EPA 300.0A (M)	EPA 9056A	--
Cation-Exchange Capacity	Solid		--	EPA 9081	--
Chemical Oxygen Demand	Water		EPA 410.4 SM 5220D	--	--
	Waste		EPA 410.4	--	--
Chloride	Water		EPA 300.0A EPA 325.2[2]	EPA 9056A EPA 9251	EPA 325.2[2]
	Waste		EPA 300.0A	EPA 9056A	--
	Solid		EPA 300.0A (M)	EPA 9056A EPA 9251(M)	--

Analytical Parameters	Matrix	Fields of Testing			
			CWA	RCRA (SW846)	Other
Chromium, Hexavalent	Water		EPA 3500-Cr-D	EPA 7196A	--
	Waste		EPA 3500-Cr-D	EPA 7196A	--
	Solid		--	EPA 3060A EPA 7196A	--
Specific Conductance	Water		EPA 120.1 SM 2510B	EPA 9050A	--
	Waste		EPA 120.1	EPA 9050A	--
	Solid		--	EPA 9050A	--
Chlorine, Residual	Water		EPA 330.5[2] SM 3500 CL-G	--	--
Cyanide (Amenable)	Water		EPA 335.1[2] SM 4500 CN-G	EPA 9012A	--
	Solid		--	EPA 9012A	--
Cyanide (Total)	Water		SM 4500-CN E EPA 335.4	EPA 9012A	---
	Waste		--	EPA 9012A	--
	Solid		--	EPA 9012A	--
Cyanide (Weak and Dissociable) (Free)	Water		SM 4500-CN I	--	--
Dissolved Oxygen	Water		360.1[2] SM 4500 O-G	--	--
Flash Point	Waste		--	EPA 1010	ASTM D93-9
	Solid		--	EPA 1010	ASTM D93-9
Fluoride	Water		EPA 300.0A EPA 340.2[2]	EPA 9056A	SM 4500 F-C, ISE
	Waste		EPA 340.2 (M)[2] EPA 300.0A (M)	EPA 9056A	--
	Solid		EPA 340.2 (M)[2] EPA 300.0A (M)	EPA 9056A	--
Iron, Ferrous & Ferric	Water		SM 3500 FE D	--	--
Hardness	Water		EPA 130.2[2]	--	SM 2340B
Moisture	Solid		---	EPA 160.3 (M) ASTM D2216-90	---
Nitrogen, Ammonia	Water		EPA 350.1	--	EPA 350.2[2]
	Waste		EPA 350.1	--	EPA 350.2[2]
	Solid		EPA 350.1	--	EPA 350.2[2]
	Water		SM 4500 NH_3-E (Titration)	--	--

Analytical Parameters Matrix	Matrix	Fields of Testing			
			CWA	RCRA (SW846)	Other
Nitrogen, Ammonia (cont'd)	Water		SM 4500 NH_3-F (ISE)	--	--
Nitrite (NO_2)	Water		EPA 300.0A	EPA 9056A	--
	Waste		EPA 300.0A (M)	EPA 9056A	--
	Solid		EPA 300.0A (M)	EPA 9056A	--
Nitrate (NO_3)	Water		EPA 300.0A	EPA 9056A	SM 4500 NO_3-E
	Waste		EPA 300.0A (M)	EPA 9056A	--
	Solid		EPA 300.0A (M)	--	--
Nitrate plus Nitrite NO_2/NO_3	Water		EPA 353.2	--	--
	Waste		EPA 353.2	--	--
Total Kjeldahl Nitrogen (TKN)	Water		EPA 351.3	--	SM 4500 NO_3
	Waste		EPA 351.3	--	--
	Solid		EPA 351.3	--	--
Oil and Grease (Hexane Extractable Material)	Water		EPA 1664A	EPA 9071B	--
	Waste		EPA 1664A	EPA 9071B	--
	Solid		--	EPA 9071B	--
Ortho-phosphate o-PO_4	Water		EPA 300.0A EPA 365.1	EPA 9056A	SM 4500 P-E
	Waste		EPA 300.0A (M)	EPA 9056A	--
	Solid		EPA 300.0A (M) EPA 365.1	EPA 9056A	--
pH	Water		EPA 150.1[2]	EPA 9040B	EPA 9041
	Waste		SM 4500 H-B	EPA 9045C	--
	Solid		---	EPA 9045C	--
Paint Filter	Water		--	EPA 9095A	--
Phenolics	Water		EPA 420.1	--	--
	Waste		--	EPA 9065	--
	Solid		--	EPA 9065	--
Phosphorus (Total)	Water		EPA 365.1	--	SM 4500 P-E
	Waste		EPA 365.1	--	--
	Solid		EPA 365.1	--	--
Sulfate (SO_4)	Water		EPA 300.0A EPA 375.4[2]	EPA 9056A EPA 9038	--
	Waste		EPA 300.0A (M) EPA 375.4[2]	EPA 9056A EPA 9038	--
	Solid		EPA 300.0A (M)	EPA 9056A EPA 9038 (M)	--

Analytical Parameters	Matrix	Fields of Testing			
			CWA	RCRA	Other
Sulfide	Water		EPA 376.1[2]	EPA 9030A SM 4500	9030B/9034
Total Organic Carbon (TOC)	Water		EPA 415.1[2]	EPA 9060	SM 5310 D
	Waste		--	EPA 9060	--
	Solid		EPA 415.1 (M)	EPA 9060 (M)	Walkley-Black
Total Organic Halides (TOX)	Water		--	EPA 9020B EPA 9023(EOX)	EPA 450.1
	Waste		--	--	--
	Solid		--	EPA 9020B	--
Total Petroleum Hydrocarbons	Water		EPA 1664A (SGT-HEM)	EPA 9071B	--
	Waste		EPA 1664A (SGT-HEM)	EPA 9071B	--
	Solid		--	EPA 9071B	--
Total Solids	Water		EPA 160.3	--	--
	Waste		EPA 160.3	--	--
	Solid		EPA 160.3 (M)	--	--
Total Dissolved Solids	Water		EPA 160.1	--	2540E
Total Suspended Solids	Water		EPA 160.2	---	2540E
Volatile and Volatile Suspended Solids	Water		EPA 160.4	--	--
Settleable Solids	Water		EPA 160.5	--	--
Turbidity	Water		EPA 180.1	--	--

[1] Any matrix not listed is not applicable for the associated method
[2] Removed from 40CFR

TABLE 20-2. Methods for Mercury by Cold Vapor Atomic Absorption

Analytical Parameters	Matrix	Fields of Testing			
			CWA	RCRA (SW846)	Other
Mercury (CVAA)	Water		EPA 245.1	EPA 7470A	--
	TCLP Leachate		--	EPA 7470A	--
	Waste		--	EPA 7471A	--
	Solid		EPA 254.5	EPA 7471A	--

TABLE 20-3. Methods for Mercury by Cold Vapor Atomic Fluororescence

Analytical Parameters	Matrix	Fields of Testing			
			CWA	RCRA (SW846)	Other
Mercury, Low Level (CVAFS)	Water		EPA 245.7	--	EPA 1631E

TABLE 20-4. Methods for Metals by ICP and ICPMS

Analytical Parameters	Matrix	Fields of Testing			
			CWA	RCRA (SW846)	Other
Aluminum	Water		EPA 200.7 EPA 200.8	EPA 6010B EPA 6020	---
	Waste		---	EPA 6010B EPA 6020	---
	Solid		EPA 200.7 EPA 200.8	EPA 6010B EPA 6020	---
Antimony	Water		EPA 200.7 EPA 200.8	EPA 6010B EPA 6020	---
	Waste		---	EPA 6010B EPA 6020	---
	Solid		EPA 200.7 EPA 200.8	EPA 6010B EPA 6020	---
Arsenic	Water		EPA 200.7 EPA 200.8	EPA 6010B EPA 6020	---
	Waste		---	EPA 6010B EPA 6020	---
	Solid		EPA 200.7 EPA 200.8	EPA 6010B EPA 6020	---

Analytical Parameters	Matrix	Fields of Testing			
			CWA	RCRA (SW846)	Other
Barium	Water		EPA 200.7 EPA 200.8	EPA 6010B EPA 6020	---
	Waste		---	EPA 6010B EPA 6020	---
	Solid		EPA 200.7 EPA 200.8	EPA 6010B EPA 6020	---
Beryllium	Water		EPA 200.7 EPA 200.8	EPA 6010B EPA 6020	---
	Waste		---	EPA 6010B EPA 6020	---
	Solid		EPA 200.7 EPA 200.8	EPA 6010B EPA 6020	---
Boron	Water		EPA 200.7	EPA 6010B	---
	Waste		---	EPA 6010B	---
	Solid		EPA 200.7	EPA 6010B	---
Calcium	Water		EPA 200.7	EPA 6010B	---
	Waste		---	EPA 6010B	---
	Solid		EPA 200.7	EPA 6010B	---
Cadmium	Water		EPA 200.7 EPA 200.8	EPA 6010B EPA 6020	---
	Waste		---	EPA 6010B EPA 6020	---
	Solid		EPA 200.7 EPA 200.8	EPA 6010B EPA 6020	---
Cobalt	Water		EPA 200.7 EPA 200.8	EPA 6010B EPA 6020	---
	Waste		---	EPA 6010B EPA 6020	---
	Solid		EPA 200.7 EPA 200.8	EPA 6010B EPA 6020	---
Chromium	Water		EPA 200.7 EPA 200.8	EPA 6010B EPA 6020	---
	Waste		---	EPA 6010B EPA 6020	---
	Solid		EPA 200.7 EPA 200.8	EPA 6010B EPA 6020	---
Copper	Water		EPA 200.7 EPA 200.8	EPA 6010B EPA 6020	---
	Waste		---	EPA 6010B EPA 6020	---
	Solid		EPA 200.7 EPA 200.8	EPA 6010B EPA 6020	---

Analytical Parameters	Matrix	Fields of Testing			
			CWA	RCRA (SW846)	Other
Iron	Water		EPA 200.7 EPA 200.8	EPA 6010B EPA 6020	
	Waste		---	EPA 6010B EPA 6020	---
	Solid		EPA 200.7 EPA 200.8	EPA 6010B EPA 6020	---
Lead	Water		EPA 200.7 EPA 200.8	EPA 6010B EPA 6020	---
	Waste		---	EPA 6010B EPA 6020	---
	Solid		EPA 200.7 EPA 200.8	EPA 6010B EPA 6020	---
Magnesium	Water		EPA 200.7	EPA 6010B EPA 6020	---
	Waste		---	EPA 6010B EPA 6020	---
	Solid		EPA 200.7	EPA 6010B EPA 6020	---
Manganese	Water		EPA 200.7 EPA 200.8	EPA 6010B EPA 6020	---
	Waste		---	EPA 6010B EPA 6020	---
	Solid		EPA 200.7 EPA 200.8	EPA 6010B EPA 6020	---
Molybdenum	Water		EPA 200.7 EPA 200.8	EPA 6010B EPA 6020	---
	Waste		---	EPA 6010B EPA 6020	---
	Solid		EPA 200.7 EPA 200.8	EPA 6010B EPA 6020	---
Nickel	Water		EPA 200.7 EPA 200.8	EPA 6010B EPA 6020	---
	Waste		---	EPA 6010B EPA 6020	---
	Solid		EPA 200.7 EPA 200.8	EPA 6010B EPA 6020	---
Potassium	Water		EPA 200.7	EPA 6010B	---
	Waste		---	EPA 6010B	---
	Solid		---	EPA 6010B	---
Selenium	Water		EPA 200.7 EPA 200.8	EPA 6010B EPA 6020	---
	Waste		---	EPA 6010B EPA 6020	---
	Solid		EPA 200.7 EPA 200.8	EPA 6010B EPA 6020	---

Analytical Parameters	Matrix	Fields of Testing			
			CWA	RCRA (SW846)	Other
Silver	Water		EPA 200.7 EPA 200.8	EPA 6010B EPA 6020	---
	Waste		---	EPA 6010B EPA 6020	---
	Solid		EPA 200.7 EPA 200.8	EPA 6010B EPA 6020	---
Sodium	Water		EPA 200.7	EPA 6010B	---
	Waste		---	EPA 6010B	---
	Solid		---	EPA 6010B	---
Tin	Water		EPA 200.7 EPA 200.8	EPA 6010B EPA 6020	---
	Waste		---	EPA 6010B EPA 6020	---
	Solid		EPA 200.7 EPA 200.8	EPA 6010B EPA 6020	---
Thallium	Water		EPA 200.7 EPA 200.8	EPA 6010B EPA 6020	---
	Waste		---	EPA 6010B EPA 6020	---
	Solid		EPA 200.7 EPA 200.8	EPA 6010B EPA 6020	---
Titanium	Water		EPA 200.7	EPA 6010B	---
	Waste		---	EPA 6010B	---
	Solid		---	EPA 6010B	---
Vanadium	Water		EPA 200.7 EPA 200.8	EPA 6010B EPA 6020	---
	Waste		---	EPA 6010B EPA 6020	---
	Solid		---	EPA 6010B EPA 6020	---
Zinc	Water		EPA 200.7 EPA 200.8	EPA 6010B EPA 6020	---
	Waste		---	EPA 6010B EPA 6020	---
	Solid		EPA 200.7 EPA 200.8	EPA 6010B EPA 6020	---

TABLE 20-5. Metals Sample Preparation Methods

Analytical Parameters	Matrix	Fields of Testing			
			CWA	RCRA (SW846)	Other
Toxicity Characteristic Leaching Procedure (TCLP)	Water		---	EPA 1311	---
	Waste		---	EPA 1311	---
	Solid		---	EPA 1311	---
ICP Metals	Water		EPA 200.7	EPA 3005A EPA 3010A	---
	TCLP Leachate		---	EPA 3010A	---
	Waste		---	EPA 3050B	---
	Solid		---	EPA 3050B	---
ICPMS Metals	Water		EPA 200.8	EPA 3010A	---
	TCLP		---	EPA 3010A	---
	Waste		---	EPA 3050B	---
	Solid		---	EPA 3050B	---
CVAA Mercury	Water		EPA 245.1	EPA 7470A	---
	TCLP Leachate		---	EPA 7470A	---
	Waste		---	EPA 7471A	---
	Solid		---	EPA 7471A	
CVAFS Mercury Low Level	Water		EPA 245.7	---	EPA 1631E

TABLE 20-6. Organic Sample Preparation Methods

Analytical Parameters	Matrix	Fields of Testing			
			CWA	RCRA (SW846)	Other
Volatiles by GC/MS	Water		EPA 624	EPA 5030B	---
	Waste		---	EPA 5030B EPA 5035	---
	Solid		---	EPA 5035 EPA 5035A	---
Halogenated Volatiles by GC	Water		EPA 601	EPA 5030B	---
	Waste		---	EPA 5030B EPA 5035	---
	Solid		---	EPA 5035 EPA 5035A	---
Aromatic Volatiles by GC	Water		EPA 602	EPA 5030B	---
	Waste		---	EPA 5030B EPA 5035	---
	Solid		---	EPA 5035 EPA 5035A	---
Semivolatiles by GC/MS	Water		EPA 625	EPA 3510C EPA 3520C	---
	TCLP Leachate		---	EPA 3510C EPA 3520C	---
	Waste		---	EPA 3550B EPA 3540C EPA 3580A EPA 3541	---
	Solid		---	EPA 3550B EPA 3540C EPA 3541	---
Pesticides/PCBs by GC	Water		EPA 608	EPA 3510C EPA 3520C	---
	TCLP Leachate		---	EPA 3510C EPA 3520C	---
	Waste		---	EPA 3550B EPA 3540C EPA 3580A EPA 3541	---
	Solid		---	EPA 3550B EPA 3540C EPA 3541	---

Analytical Parameters	Matrix	Fields of Testing			
			CWA	RCRA (SW846)	Other
Herbicides by GC	Water		EPA 615	EPA 8151A	---
	Waste		---	EPA 8151A	---
	Solid		---	EPA 8151A	---
Total Petroleum Hydrocarbons (Gasoline Range) by GC	Water		---	EPA 5030B	WI GRO
	Waste		---	EPA 5030B EPA 5035	WI GRO
	Solid		---	EPA 5035 EPA 5035	WI GRO
Total Petroleum Hydrocarbons (Diesel Range) by GC	Water		---	EPA 3510C EPA 3520C	WI DRO
	TCLP Leachate		---	EPA 3510C EPA 3520C	---
	Waste		---	EPA 3550B EPA 3580A	WI DRO
	Solid		---	EPA 3550B	WI DRO

TABLE 20-7. Organic Methods of Analysis

Analytical Parameters	Matrix	Fields of Testing		
		CWA	RCRA (SW846)	Other
Volatiles by GC/MS	Water	EPA 624	EPA 8260B	---
	Waste	---	EPA 8260B	---
	Solid	---	EPA 8260B	---
Halogenated Volatiles by GC	Water	EPA 601	EPA 8021B	---
	Waste	---	EPA 8021B	---
	Solid	---	EPA 8021B	---
Aromatic Volatiles by GC	Water	EPA 602	EPA 8021B	---
	Waste	---	EPA 8021B	---
	Solid	---	EPA 8021B	---
Semivolatiles by GC/MS	Water	EPA 625	EPA 8270C	
	Waste	---	EPA 8270C	---
	Solid	---	EPA 8270C	---
Pesticides/PCBs by GC	Water	EPA 608	Pesticides 8081A PCBs 8082	---
	TCLP Leachate	---	Pesticides 8081A PCBs 8082	---
	Waste	---	Pesticides 8081A PCBs 8082	---
	Solid	---	Pesticides 8081A PCBs 8082	---
Phenoxyacid Herbicides by GC	Water	---	EPA 8151A	---
	TCLP Leachate	---	EPA 8151A	---
	Waste	---	EPA 8151A	---
	Solid	---	EPA 8151A	---
Gasoline Range Organics by GC	Water	---	EPA 8015B (M)	WI GRO
	Waste	---	EPA 8015B (M)	---
	Solid	---	EPA 8015B (M)	WI GRO
Total Petroleum Hydrocarbons (Diesel Range) by GC/FID	Water	---	EPA 8015B (M)	WI DRO
	Waste	---	EPA 8015B (M)	---
Dissolved Gases RSK-175	Water	---	---	SOP
Formaldehyde Carbonyl Compounds	Water	---	EPA 8315	---

The laboratory reviews updated versions to all the aforementioned references for adaptation based upon capabilities, instrumentation, etc., and implements them as appropriate. As such, the laboratory strives to perform only the latest versions of each approved method as regulations allow or require.

Other reference procedures for non-routine analyses may include methods established by specific states (e.g., Underground Storage Tank methods), ASTM or equipment manufacturers. Sample type, source, and the governing regulatory agency requiring the analysis will determine the method utilized.

The laboratory shall inform the client when a method proposed by the client may be inappropriate or out of date. After the client has been informed, and they wish to proceed contrary to the laboratory's recommendation, it will be documented.

20.4.2 Demonstration of Capability

Before the laboratory may institute a new method and begin reporting results, the laboratory shall confirm that it can properly operate the method. In general, this demonstration does not test the performance of the method in real world samples, but in an applicable and available clean matrix sample. If the method is for the testing of analytes that are not conducive to spiking, demonstration of capability may be performed on quality control samples.

20.4.2.1 A demonstration of capability is performed whenever there is a change in instrument type, method or personnel.

20.4.2.2 The initial demonstration of capability must be thoroughly documented and approved by the Technical Director and QA Manager prior to independently analyzing client samples. All associated documentation must be retained in accordance with the laboratories archiving procedures. Refer to Section 15, Control of Records.

20.4.2.3 The laboratory must have an approved SOP, demonstrate satisfactory performance, and conduct a method detection limit study (when applicable). There may be other requirements as stated within the published method or regulations (i.e., retention time window study).

Note: In some instances, a situation may arise where a client requests that an unusual analyte be reported using a method where this analyte is not normally reported. If the analyte is being reported for regulatory purposes, the method must meet all procedures outlined within this QA Manual (SOP, MDL, and Demonstration of Capability). If the client states that the information is not for regulatory purposes, the result may be reported as long as the following criteria are met:

- The instrument is calibrated for the analyte to be reported using the criteria for the method and ICV/CCV criteria are met (unless an ICV/CCV is not required by the method).
- The reporting limit is set at or above the first standard of the curve for the analyte.
- The client request is documented and the lab informs the client of its procedure for working with unusual compounds. This must be addressed in the Case Narrative.

- Refer to Section 12, Control of Non-Conforming Work.

20.4.3 Initial Demonstration of Capability (IDOC) Procedures

20.4.3.1 At least four aliquots shall be prepared (including any applicable clean-up procedures) and analyzed according to the test method (either concurrently or over a period of days).

20.4.3.2 Using all of the results, calculate the mean recovery in the appropriate reporting units and the standard deviations for each parameter of interest. Refer to SOP CORP-QA-0013, Employee Orientation and Training, for details on this procedure.

A certification statement (see Figure 20-1 as an example) shall be used to document the completion of each initial demonstration of capability. A copy of the certification is archived in the analyst's training folder.

20.5 LABORATORY DEVELOPED METHODS AND NON-STANDARD METHODS

Any new method developed by the laboratory must be fully defined in an SOP/Methods Manual (Section 20.2) and validated by qualified personnel with adequate resources to perform the method. Method specifications and the relation to client requirements must be clearly conveyed to the client if the method is a non-standard method (not a published or routinely accepted method). The client must also be in agreement to the use of the non-standard method. The information included in the checklist below (Figure 20-2) is needed before samples are accepted for analysis by a new method.

20.6 VALIDATION OF METHODS

Validation is the confirmation by examination and the provision of objective evidence that the particular requirements for a specific intended use are fulfilled (from 2003 NELAC Standard).

All non-standard methods, laboratory designed/developed methods, standard methods used outside of their scope, and major modifications to published methods must be validated to confirm they are fit for their intended use. The validation will be as extensive as necessary to meet the needs of the given application. The results are documented with the validation procedure used and contain a statement as to the fitness for use.

20.6.1 Method Validation and Verification Activities for All New Methods

While method validation can take various courses, the following activities can be required as part of method validation. Method validation records are designated QC records and are archived accordingly.

20.6.1.1 Determination of Method Selectivity

Method selectivity is the demonstrated ability to discriminate the analyte(s) of interest from other compounds in the specific matrix or matrices from other analytes or interference. In some

cases to achieve the required selectivity for an analyte, a confirmation analysis is required as part of the method.

20.6.1.2 **Determination of Method Sensitivity**

Sensitivity can be both estimated and demonstrated. Whether a study is required to estimate sensitivity depends on the level of method development required when applying a particular measurement system to a specific set of samples. Where estimations and/or demonstrations of sensitivity are required by regulation or client agreement, such as the procedure in 40 CFR Part 136 Appendix B, under the Clean Water Act, these shall be followed. The laboratory determinations of MDLs are described in Section 20.6.

20.6.1.3 **Relationship of Limit of Detection (LOD) to the Quantitation Limit (QL)**

An important characteristic of expression of sensitivity is the difference in the LOD and the QL. The LOD is the minimum level at which the presence of an analyte can be reliably concluded. The QL is the minimum level at which both the presence of an analyte and its concentration can be reliably determined. For most instrumental measurement systems, there is a region where semi-quantitative data is generated around the LOD (both above and below the estimated MDL or LOD) and below the QL. In this region, detection of an analyte may be confirmed but quantification of the analyte is unreliable within the accuracy and precision guidelines of the measurement system. When an analyte is detected below the QL, and the presence of the analyte is confirmed by meeting the qualitative identification criteria for the analyte, the analyte can be reliably reported, but the amount of the analyte can only be estimated. If data is to be reported in this region, it must be done so with a qualification that denotes the semi-quantitative nature of the result.

20.6.1.4 **Determination of Interferences**

A determination that the method is free from interferences in a blank matrix is performed.

20.6.1.5 **Determination of Range**

Where appropriate, a determination of the applicable range of the method may be performed. In most cases, range is determined and demonstrated by comparison of the response of an analyte in a curve to established or targeted criteria. The curve is used to establish the range of quantitation and the lower and upper values of the curve represent upper and lower quantitation limits. Curves are not limited to linear relationships.

20.6.1.6 **Determination of Accuracy and Precision**

Accuracy and precision studies are generally performed using replicate analyses, with a resulting percent recovery and measure of reproducibility (standard deviation, relative standard deviation) calculated and measured against a set of target criteria.

20.6.1.7 **Documentation of Method**

The method is formally documented in an SOP. If the method is a minor modification of a standard laboratory method that is already documented in an SOP, an SOP Attachment describing the specific differences in the new method is acceptable in place of a separate SOP.

20.6.1.8 **Continued Demonstration of Method Performance**

Continued demonstration of Method Performance is addressed in the SOP. Continued demonstration of method performance is generally accomplished by batch specific QC samples such as LCS, method blanks or PT samples.

20.7 METHOD DETECTION LIMITS (MDL)/ LIMITS OF DETECTION (LOD)

Method detection limits (MDL) are initially determined in accordance with 40 CFR Part 136, Appendix B, or alternatively by other technically acceptable practices that have been accepted by regulators. MDL is also sometimes referred to as Limit of Detection (LOD). The MDL theoretically represents the concentration level for each analyte within a method at which the Analyst is 99% confident that the true value is not zero. The MDL is determined for each analyte initially during the method validation process and updated as required in the analytical methods, whenever there is a significant change in the procedure or equipment, or based on project specific requirements (refer to Section 20.7.10). The analyst prepares at least seven replicates of solution spiked at one to five times the estimated method detection limit (most often at the lowest standard in the calibration curve) into the applicable matrix with all the analytes of interest. Each of these aliquots is extracted (including any applicable clean-up procedures) and analyzed in the same manner as the samples. Where possible, the seven replicates should be analyzed over 2-4 days to provide a more realistic MDL. To allow for some flexibility, this low level standard may be analyzed every batch or every week or some other frequency rather than doing the study all at once. In addition, a larger number of data points may be used if the appropriate t-value multiplier is used.

20.7.1 MDLs are initially performed for each individual instrument and non-microbiological method analysis. Unless there are requirements to the contrary, the laboratory will use the highest calculated MDL for all instruments used for a given method as the MDL for reporting purposes. This MDL is not required for methods that are not readily spiked, e.g., pH, turbidity, etc. Titration and gravimetric methods where there is no additional preparation involved, the MDL is based on the lowest discernable unit of measure that can be observed.

20.7.2 MDLs must be run against acceptable instrument QC, including ICVs and Tunes. This is to ensure that the instrument is in proper working condition and falsely high or low MDLs are not calculated.

20.7.3 Use only clean matrix which is free of target analytes (e.g.: Laboratory reagent water, Ottawa Sand) unless a project specific MDL is required in a field sample matrix.

20.7.4 The Reporting Limit should generally be between two and five times the MDL. If the MDL is being performed during method development, use this guideline to determine the Reporting Limit for the analysis. For DoD labs, the RL is $\geq$ 3x MDL. If a sample is diluted, the reported MDL is adjusted according to the dilution factor.

20.7.5 If the MDL is < 1/10 of the spike concentration for more than 10% of the analytes in the method (< 1/5 of spike recovered for DoD for water samples), the MDL must be repeated (including extraction or digestion) using a lower spike level unless the percent recovery is <50% or >150% of the "true value". Note: The concentration of the spike will be at a level below the calibration range. Note: The spiking concentration must be less than the reporting limit.

20.7.6 The calculated MDL cannot be not greater than the spike amount.

20.7.7 If the most recent calculated MDL does not permit qualitative identification of the analyte then the laboratory may use technical judgment for establishing the MDL (e.g., calculate what level would give a qualitative ID, compare with IDL (20.7), spike at a level where qualitative ID is determined and assign that value as MDL, minimum sensitivity requirements, Standard deviation of method blanks over time, etc.).

20.7.8 Each of the seven spikes must be qualitatively identifiable, e.g., appear in both columns for dual column methods, characteristic ions for GCMS mass spectra, etc. Manual integrations to force the baseline for detection are not allowed.

20.7.9 The initial MDL is calculated as follows:

$$MDL = t_{(n-1,\ 1-a\ =\ 0.99)} \times (\text{Standard Deviation of replicates})$$

where $t_{(n-1,\ 1-a\ =\ 0.99)} = 3.143$ for seven replicates.

20.7.10 Subsequent to the initial MDL determination, periodic MDL verification, confirmation or determinations may be performed by the procedure in 40 CFR Part 136, Appendix B or alternatively by other technically acceptable practices (e.g., method blanks over time, single standard spikes that have been subjected to applicable sample prep processes, etc.). The procedures utilized must be documented in the MDL SOP NC-QA-0021, Evaluation of Method Detection Limits for Chemical Tests.

20.7.11 Because of the inherent variability in results outside of the calibration range, TestAmerica does not recommend the reporting of results below the lowest calibration point in a curve; however, it is recognized that some projects and agencies require the reporting of results below the RL. Any result that falls between the MDL and the Reporting limit, when reported, will be qualified as an estimated value.

20.7.12 Detections reported down to the MDL must be qualitatively identified.

20.7.13 MDLs and Reporting limits are adjusted in LIMs based on moisture content and sample aliquot size.

20.8 INSTRUMENT DETECTION LIMITS (IDL)

20.8.1 The IDL is sometimes used to assess the reasonableness of the MDLs or in some cases required by the analytical method or program requirements. IDLs are most used in metals analyses but may be useful in demonstration of instrument performance in other areas.

20.8.2 IDLs are calculated to determine an instrument's sensitivity independent of any preparation method. IDLs are calculated either by using seven replicate spike analyses, like MDL but without sample preparation, or by the analysis of ten instrument blanks and calculating three times the absolute value of the standard deviation.

20.8.3 If IDL is > than the MDL, it may be used as the reported MDL.

20.9 VERIFICATION OF DETECTION AND REPORTING LIMITS

20.9.1 Once an MDL is established, it must be verified, on each instrument, by analyzing a quality control sample (prepared as a sample) at approximately two times the calculated MDL. The analytes must be qualitatively identified or see Section 20.6.7 for other options. This verification does not apply to methods that are not readily spiked, e.g., pH, turbidity, etc. If the MDL does not verify, then the lab will not report to the MDL, or redevelop their MDL or use the level where qualitative identification is established (see Section 20.6.7). MDLs must be verified at least quarterly.

20.9.2 When a Reporting limit is established, it must be initially verified by the analysis of a low-level standard or QC sample (LCS at 1-2 the reporting limit) and annually thereafter. Unless there are requirements to the contrary, the acceptance criteria is ±50%. The annual requirement is waved for methods that have an annually verified MDL.

20.10 RETENTION TIME WINDOWS

Most organic analyses and some inorganic analyses use chromatography techniques for qualitative and quantitative determinations. For every chromatography analysis each analyte will have a specific time of elution from the column to the detector. This is known as the analyte's retention time. The variance in the expected time of elution is defined as the retention time window. As the key to analyte identification in chromatography, retention time windows must be established on every column for every analyte used for that method. These records are kept in each department.

For GC, HPLC and IC methods, there must be sufficient separation between analyte peaks so as to not misidentify analytes. In the mid-level standard, the distance between the valley and peak height cannot be any less than 25% of the sum of the peak heights of the analytes. This also applies to GCMS in the case where the two compounds share the same quantitation ion.

Note: Some analytes do not separate sufficiently to be able to identify or quantitate them as separate analytes, e.g., m-xylene and p-xylene, and are quantitated and reported as a single analyte, e.g., m,p-xylenes.

Once the analyst has determined that the instrument is in optimum working condition through calibration and calibration verification procedures, he or she uses a mid-range calibration or calibration verification standard to establish the retention times for each of the individual analytes in a method. The analyst makes three injections of the same standard over a 72-hour (24-hr period for 300.0) period, tabulating the retention times for each analyte for each of the three injections. The width of retention time window is normally the average absolute retention time ± 3

Standard Deviations. A peak outside the retention time window will not be identified by the computer as a positive match of the analyte of interest.

It is possible for the statistically calculated RT window to be too tight and need to be adjusted based on analyst experience. In these instances method default retention time windows may be used, e.g., for 8000 series methods a default of 0.03 minutes may be used, and EPA CLP 0.05 minutes is used. The same concept is applied when any peak outside of that window will not be identified by the computer as a positive match.

The calibration verification standard at the beginning of a run may be used to adjust the RT for an analyte. This is essentially re-centering the window, but the size of the window remains the same. The RTs are verified when all analytes are within their RT windows and are properly identified.

20.11 EVALUATION OF SELECTIVITY

The laboratory evaluates selectivity by following the checks within the applicable analytical methods, which include mass spectral tuning, second column confirmation, ICP interelement interference checks, chromatography retention time windows, sample blanks, atomic absorption, or fluorescence profiles.

20.12 ESTIMATION OF UNCERTAINTY OF MEASUREMENT

20.12.1 Uncertainty is "a parameter associated with the result of a measurement, that characterizes the dispersion of the values that could reasonably be attributed to the measurand" (as defined by the International Vocabulary of Basic and General Terms in Metrology, ISO Geneva, 1993, ISBN 92-67-10175-1). Knowledge of the uncertainty of a measurement provides additional confidence in a result's validity. Its value accounts for all the factors which could possibly affect the result, such as adequacy of analyte definition, sampling, matrix effects and interferences, climatic conditions, variances in weights, volumes, and standards, analytical procedure, and random variation. Some national accreditation organizations require the use of an "expanded uncertainty": the range within which the value of the measurand is believed to lie within at least a 95% confidence level with the coverage factor k=2.

20.12.2 Uncertainty is not error. Error is a single value, the difference between the true result and the measured result. On environmental samples, the true result is never known. The measurement is the sum of the unknown true value and the unknown error. Unknown error is a combination of systematic error, or bias, and random error. Bias varies predictably, constantly, and independently from the number of measurements. Random error is unpredictable, assumed to be Gaussian in distribution, and reducible by increasing the number of measurements.

20.12.3 The uncertainty associated with results generated by the laboratory can be determined by using the Laboratory Control Sample (LCS) accuracy range for a given analyte. The LCS limits are used to assess the performance of the measurement system since they take into consideration all of the laboratory variables associated with a given test over time (except for variability associated with the sampling). The percent recovery of the LCS is compared either to the method-required LCS accuracy limits or to the statistical, historical, in-house LCS accuracy limits.

20.12.4 To calculate the uncertainty for the specific result reported, multiply the result by the decimal of the lower end of the LCS range percent value for the lower end of the uncertainty range, and multiply the result by the decimal of the upper end of the LCS range percent value for the upper end of the uncertainty range. These calculated values represent a 99%-certain range for the reported result. As an example, suppose that the result reported is 1.0 mg/l, and the LCS percent recovery range is 50 to 150%. The uncertainty range would be 0.5 to 1.5 mg/l, which could also be written as 1.0 +/- 0.5 mg/l.

20.12.5 In the case where a well recognized test method specifies limits to the values of major sources of uncertainty of measurement, e.g., 524.2, 525, etc., and specifies the form of presentation of calculated results, no further discussion of uncertainty is required.

20.13 CONTROL OF DATA

The laboratory has policies and procedures in place to ensure the authenticity, integrity, and accuracy of the analytical data generated by the laboratory.

20.13.1 Computer and Electronic Data Related Requirements

The three basic objectives of our computer security procedures and policies are shown below. The laboratory is currently running the QuantIMS LIMS which is a custom in-house developed LIMS system that has been highly customized to meet the needs of the laboratory. It is referred to as LIMS for the remainder of this section. The LIMS utilizes AS400 which is an industry standard relational database platform. It is referred to as Database for the remainder of this section.

20.13.1.1 **Maintain the Database Integrity:** Assurance that data is reliable and accurate through data verification (review) procedures, password-protecting access, anti-virus protection, data change requirements, as well as an internal LIMS permissions procedure.

- LIMS Database Integrity is achieved through data input validation, internal user controls, and data change requirements.

- Spreadsheets and other software developed in-house must be verified with documentation through hand calculations prior to use.

  Note: "Commercial off-the-shelf software in use within the designed application range is considered to be sufficiently validated" f*rom NELAC 2003 Standard.* However, laboratory specific configurations or modifications are validated prior to use.

- In order to assure accuracy, all data entered or transferred into the LIMS data system goes through a minimum of two levels of review.

- The QA department performs random data audits to ensure the correct information has been reported.

- Changes to reports are documented via Change Order Forms and by noting "Revised" on the cover page.

- Analytical data file security is provided through three policies.
  - The first policy forbids unauthorized personnel from using laboratory data acquisition computers.
  - The second policy is the implementation of network passwords and login names that restrict directory access.
  - The third layer is maintained through the LIMS and includes the use of username/password combinations to gain access to the LIMS system, the fact that all data in the LIMS is associated with the user to added/reviewed the data, and the restriction of review authority of data.

- All software installations will be in accordance with any relevant copyright licensing regulations.

- All software installed on any computer within the laboratory must be approved by the Information Technology Department regional support technician assigned to the laboratory**.** Shrink-wrapped or otherwise sealed OEM software that is directly related to instrument usage does not need approval, but the Information Technology Department must be notified of the installation.

- Anti-virus software shall be installed on all servers and workstations. The anti-virus software shall be configured to check for virus signature file and program updates on a daily basis and these updates will be pushed to all servers and workstations. The anti-virus software will be configured to clean any virus-infected file if possible, otherwise the file will be deleted. Disks and CDs brought from any outside source that are not OEM software must be scanned for viruses before being accessed.

- **Interlab LIMS Permissions Policy**
  - <u>PURPOSE</u> - The purpose of this policy is to provide a mechanism for maintaining the integrity of information contained in each laboratory's LIMS while providing the necessary access for information sharing to staff at other laboratory facilities.

  - <u>DEFINITIONS</u> - Host Laboratory: The laboratory facility that 'owns' the LIMS system or 'hosts' a project/job.

  - <u>POLICIES</u>
    (a) All permissions for the laboratory's LIMS system must only be granted by a representative of that laboratory.
    - If someone outside of the host lab needs permissions for Project Management or other uses, they must go through the Lab Director or his/her designated representative.
    - Permissions must never be granted without the knowledge of the host laboratory.

    (b) Only laboratory analytical or QA staff from the home laboratory may have edit permissions for laboratory analysis data.

(c) Any changes made in laboratory's LIMS system:
- Must be documented and traceable.
- If made by staff of an affiliate lab, written permission from the home lab to make the changes (email approval is sufficient) is required.
- No corrections may be made in another laboratories system without their knowledge.

(d) Data qualifiers in laboratory reports must only be corrected, edited, etc. by the staff at the host laboratory.

(e) Full analytical data "View" only permissions may be granted to outside Project Management and Sales staff. Search permissions may also be granted so status may be checked.

(f) All qualifiers must be approved by QA staff before adding to standard reference tables.

(g) Please contact Corporate QA or IT staff if you have any questions regarding implementation or interpretation of this policy.

20.13.1.2 **Ensure Information Availability:** Protection against loss of information or service through scheduled back-ups, secure storage of media, line filter, Uninterruptible Power Supply (UPS), and maintaining older versions of software as revisions are implemented.

- Insured by timely backup procedures on reliable backup media, stable file server network architecture, and UPS protection

- UPS Protection:
  - Each fileserver is protected by an appropriate power protection/backup unit. In the event of a power outage, there is approximately 15-30 minutes of up-time for the servers prior to shutdown. This allows for proper shutdown procedures to be followed with the fileservers.

- File Server Architecture
  - All files are maintained on multiple Windows 2000 or newer servers which are secured physically in the Information Technology office. Access to these servers is limited to members of the Information Technology staff.
  - All supporting software is maintained for at least five years from the last raw data generated using that software. Length of time is dependent on local regulations or client requirements, e.g., OVAP requires ten years.

- System Back-up Overview and Procedures
  - Data from both servers and instrument attached PC's are backed up and purged in compliance with the corporate back-up policy.
  - A Maintenance Plan has been defined to create a daily archive of all data within the LIMS database to a backup location. This backup is initiated automatically by either the database or back-up system.

- Backup tapes will be stored in compliance with the corporate Data Backup Policy. Backup verifications are carried out in accordance with the corporate Data Backup Policy.
- Instrument data back-ups are verified on a periodic basis by the QA department when performing electronic data audits. The audit takes place on data that has been moved to a back-up location ensuring that it has been moved.

20.13.1.3 Maintain Confidentiality: Ensure data confidentiality through physical access controls, and encryption of when electronically transmitting data.

- All servers are located in a secure area of the IT department offices. Access to the servers is limited to IT staff members.
- The company website contains SSL (Secure Socket Layer) encryption for secure website sessions and data transfers.
- Electronic documents such as PDF files and electronic data deliverables may be made available to clients via the secure web site. The logon page for this web site contains an agreement that the customer must accept before they will be logged on which states that the customer agrees not to alter any electronic data made available to them.

20.13.2 Data Reduction

The complexity of the data reduction depends on the analytical method and the number of discrete operations involved, e.g., extractions, dilutions, instrument readings and concentrations. The analyst calculates the final results from the raw data or uses appropriate computer programs to assist in the calculation of final reportable values.

For manual data entry, e.g., Wet Chemistry, the data is reduced by the analyst and then verified by peer review once updated in LIMS. The review checklists are signed by both the analyst and reviewer to confirm the accuracy of the manual entry(s).

Manual integration of peaks will be documented and reviewed and the raw data will be flagged in accordance with the TestAmerica Corporate SOP CA-Q-S-002, *Acceptable Manual Integration Practices*.

Analytical results are reduced to appropriate concentration units specified by the analytical method, taking into account factors such as dilution, sample weight or volume, etc. Blank correction will be applied only when required by the method or per manufacturer's indication; otherwise, it must not be performed. Calculations are independently verified by appropriate laboratory staff. Calculations and data reduction steps for various methods are summarized in the respective analytical SOPs or program requirements.

20.13.2.1 All raw data must be retained. All criteria pertinent to the method must be recorded. The documentation is recorded at the time observations or calculations are made and must be signed or initialed/dated (month/day/year). It must be easily identifiable who performed which tasks if multiple people were involved.

20.13.2.2 In general, concentration results are reported in milligrams per liter (mg/l) or micrograms per liter (µg/l) for liquids and milligrams per kilogram (mg/kg) or micrograms per kilogram (µg/kg) for solids. The units "mg/l" and "mg/kg" are the same as "parts per million (ppm)". The units "µg/l" and "µg/kg" are the same as "parts per billion (ppb)." For values greater than 10,000 mg/l, results can be reported in percent, i.e., 10,000 mg/l = 1%.

- Several environmental methods, such as color, turbidity, conductivity, use very specific, non-concentration units to report results (e.g., NTU, umhos/cm etc).

- Occasionally, the client requests that results be reported in units which take into account the measured flow of water or air during the collection of the sample. When they provide this information, the calculations can be performed and reported.

20.13.2.3 For those methods that do not have an instrument printout or an instrumental output compatible with the LIMS System, the raw results and dilution factors are entered directly into LIMS by the analyst, and the software calculates the final result for the analytical report. LIMS has a defined significant figure criterion for each analyte.

20.13.2.4 The laboratory strives to import data directly from instruments or calculation spreadsheets to ensure that the reported data are free from transcription and calculation errors. For those analyses with an instrumental output compatible with the LIMS, the raw results and dilution factors are transferred into LIMS electronically after reviewing the quantitation report, and removing unrequested or poor spectrally-matched compounds. The analyst prints a copy of what has been entered to check for errors. This printout and the instrument's printout of calibrations, concentrations, retention times, chromatograms, and mass spectra, if applicable, are retained with the data file.

20.13.3 Logbook / Worksheet Use Guidelines

Logbooks and worksheets are filled out 'real time' and have enough information on them to trace the events of the applicable analysis/task. (e.g. calibrations, standards, analyst, sample ID, date, time on short holding time tests, temperatures when applicable, calculations are traceable, etc.)

- Corrections are made following the procedures outlined in Section 13.
- Logbooks are controlled by the QA Department. A record is maintained of all logbooks in the lab.
- Unused portions of pages must be "Z"'d out, signed and dated.
- Worksheets are created with the approval of the QA Manager at the facility. The QA Manager controls all worksheets following the procedures in Section 6.

20.13.4 Review / Verification Procedures

20.13.4.1 Data Recording Procedures: To ensure data integrity, all documentation of data and records generated or used during the process of data generation must be performed in compliance with Section 3 of this document and Policy T-Q-005, Recording Laboratory Observations and Raw Data.

20.13.4.2 Data Reduction and Verification Procedures: Data review procedures comprise a set of computerized and manual checks applied at appropriate levels of the measurement process. Data review begins with the reduction or processing of data and continues through verification of the data and the reporting of analytical results. Calculations are checked from the raw data to the final value prior to reporting results for each group of samples. Data reduction can be performed by the analyst who obtained the data or by another analyst. Data verification starts with the analyst who performs a 100% review of the data to ensure the work was done correctly the first time. Data verification continues with review by a second reviewer who verifies that data reduction has been correctly performed and that the analytical results correspond to the data acquired and processed.

20.13.4.2.1 Data Reduction and Initial Verification: Data reduction and initial verification may be performed by more than one analyst depending upon the analytical method employed. The preparation and analytical data may be reviewed independently by different analysts. In these instances, each item may not be applicable to the subset of the data verified or an item may be applicable in both instances. It is the responsibility of the analyst to ensure that the verification of data in his or her area is complete. The data reduction and initial verification process must ensure that:

- Sample preparation information is correct and complete including documentation of standard identification, solvent lot numbers, sample amounts, etc.
- Analysis information is correct and complete including proper identification of analysis output (charts, chromatograms, mass spectra, etc.)
- Analytical results are correct and complete including calculation or verification of instrument calibration, QC results, and qualitative and quantitative sample results with appropriate qualifiers
- The appropriate SOPs have been followed and are identified in the project and/or laboratory records
- Proper documentation procedures have been followed
- All non-conformances have been documented
- Special sample preparation and analytical requirements have been met.
- The data generated have been reported with the appropriate number of significant figures as defined by the analytical method in the LIMS or otherwise specified by the client.

In general, data will be processed by an analyst in one of the following ways:

- Manual computation of results directly on the data sheet or on calculation pages attached to the data sheets
- Input of raw data for computer processing

- Direct acquisition and processing of raw data by a computer.

If data are manually processed by an analyst, all steps in the computation shall be provided including equations used and the source of input parameters such as response factors (RFs), dilution factors, and calibration constants. If calculations are not performed directly on the data sheet, they may be attached to the data sheets.

Manual integrations are sometimes necessary to correct misintegrations by an automatic data system software program, but must only be performed when necessary. Further discussion of manual integrations and the required documentation is given in Policy S-Q-004, Acceptable Manual Integration Practices.

For data that are input by an analyst and processed using a computer, a copy of the input shall be kept and uniquely identified with the project number and other information as needed. The samples analyzed must be clearly identified.

If data are directly acquired from instrumentation or a test procedure and processed, or immediately entered into LIMS, the analyst must verify that the following are correct:

- Project and sample numbers
- Calibration constants and RFs
- Units
- Numerical values used for reporting limits.

Analysis-specific calculations for methods are provided in SOPs. In cases where computers perform the calculations, software must be validated or verified, as described in Section 6.0 of this document, before it is used to process data.

The data reduction is documented, signed and dated by the analyst completing the process. Initial verification of the data reduction by the same analyst is documented on a data review checklist, signed and dated by the analyst.

20.13.4.2.2. Data Verification: Following the completion of the initial verification by the analyst performing the data reduction, a systematic check of the data that has been fully reduced and checked through Level 1 review is performed by an experienced peer, supervisor, or designee. This Level 2 check is performed to ensure that Level 1 review has been completed correctly and thoroughly. The second level reviewer examines the data signed by the analyst. Any exceptions noted by the analyst must be reviewed. Included in this review is an assessment of the acceptability of the data with respect to:

- Adherence of the procedure used to the requested analytical method SOP
- Correct interpretation of chromatograms, mass spectra, etc.
- Correctness of numerical input when computer programs are used (checked randomly)
- Correct identification and quantitation of constituents with appropriate qualifiers

- Numerical correctness of calculations and formulas (checked randomly)
- Acceptability of QC data (100% review)
- Documentation that instruments were operating according to method specifications (calibrations, performance checks, etc.)
- Documentation of dilution factors, standard concentrations, etc.
- Sample holding time assessment.

This review also serves as verification that the process the analyst has followed is correct in regard to the following:

- The analytical procedure follows the methods and client-specific instructions.
- Nonconforming events have been addressed by corrective action as defined on a nonconformance memo
- Valid interpretations have been made during the examination of the data and the review comments of the initial reviewer are correct
- The package contains all of the necessary documentation for data review and report production and results are reported in a manner consistent with the method used for preparation of data reports.

The specific items covered in the second stage of data verification may vary according to the analytical method, but this review of the data must be documented by signing the same checklist.

20.13.4.2.3. Completeness Verification: A third-level review is performed by the reporting and project management staff. This review is required before results are submitted to clients. This review serves to verify the completeness of the data report and to ensure that project requirements are met for the analyses performed. The items to be reviewed are:

- Analysis results are present for every sample in the analytical batch, reporting group, or sample delivery group (SDG)
- Every parameter or target compound requested is reported with either a value or reporting limit
- All nonconformances, including holding time violations, and data evaluation statements that impact the data quality are accompanied by clearly expressed comments from the laboratory
- The final report contains all the supporting documentation required by the project, and is in either the standard TestAmerica format or in the client-required format.
- Implement checks to monitor the quality of laboratory results using correlation of results for different parameters of a sample (for example, does the TOC results justify the concentration of organic compounds found by GC/MS.)
- A narrative to accompany the final report will be finalized by the PM. This narrative will include relevant comments collected during the earlier reviews.

20.13.5 Manual Integrations

Computerized data systems provide the analyst with the ability to re-integrate raw instrument data in order to optimize the interpretation of the data. Though manual integration of data is an

invaluable tool for resolving variations in instrument performance and some sample matrix problems, when used improperly, this technique would make unacceptable data appear to meet quality control acceptance limits. Improper re-integrations lead to legally indefensible data, a poor reputation, or possible laboratory decertification. Because guidelines for re-integration of data are not provided in the methods and most methods were written prior to widespread implementation of computerized data systems, the laboratory trains all analytical staff on proper manual integration techniques using SOP CA-Q-S-002 as the guidelines.

20.13.5.1 The analyst must adjust baseline or the area of a peak in some situations, for example when two compounds are not adequately resolved or when a peak shoulder needs to be separated from the peak of interest. The analyst must use professional judgment and common sense to determine when manual integrating is required. Analysts are encouraged to ask for assistance from a senior analyst or manager when in doubt.

20.13.5.2 Analysts shall not increase or decrease peak areas to for the sole purpose of achieving acceptable QC recoveries that would have otherwise been unacceptable. The intentional recording or reporting of incorrect information (or the intentional omission of correct information) is against company principals and policy and is grounds for immediate termination.

20.13.5.3 Client samples, performance evaluation samples, and quality control samples are all treated equally when determining whether or not a peak area or baseline should be manually adjusted.

20.13.5.4 All manual integrations receive a second level review. Manual integrations must be indicated on an expanded scale “after” chromatograms such that the integration performed can be easily evaluated during data review. Expanded scale “before” chromatograms are also required for all manual integrations on QC parameters (calibrations, calibration verifications, laboratory control samples, internal standards, surrogates, etc.) unless the laboratory has another documented corporate-approved procedure in place that can demonstrate an active process for detection and deterrence of improper integration practices.

Figure 20-1.
Example - Demonstration of Capability Documentation

Analyst Demonstration of Capability
Certification Statement

Analyst Name
Date:

Test Method:
SOP:
Matrix:

TestAmerica North Canton laboratory
4101 Shuffel Drive NW
North Canton, OH 44720
(330) 497-9396

We, the undersigned, CERTIFY that:

1. The analyst identified above, using the cited test method with the specifications in the cited SOP, which is in use at this facility for the analysis of samples under the TestAmerica Quality Assurance Plan, has met the Initial or Ongoing Demonstration of Capability.

2. The test method was performed by the analyst identified on this certification following the TestAmerica SOP.

3. A copy of the laboratory-specific SOP is available for all personnel on-site.

4. The data associated with the initial/ongoing demonstration of capability are true, accurate, complete and self-explanatory (*). These data are attached to this certification statement.

5. All raw data (including a copy of this certification form) necessary to reconstruct and validate these analyses have been retained at the facility, and that the associated information is well organized and available for review by authorized inspectors.

Comments/Observations:

Analyst's Name	Signature	Date
Technical Director's Name	Signature	Date
QA Manager's Name	Signature	Date

* *True: Consistent with supporting data.*
Accurate: Based on good laboratory practices consistent with sound scientific principles/practices.
Complete: Includes the results of all supporting performance testing.
Self-explanatory: Data properly labeled and stored so that the results are traceable and require no additional explanation.

Figure 20-2.

Example - New Method / Additional Analyte Checklist

New Method / Additional Analyte Checklist

The following items are **required** to be completed prior to the acceptance of client samples.
Fill in any blanks that do not apply with "NA".
Forward to Analytical Group, Operations Manager, Technical Director, and QA.

New Method – include method number and reference _____

New Analytes – list analyte and reporting limit

_____
_____
_____

Matrix: water – solid – waste	
Analytical Groups Contacted	
Standard available for new analyte(s), including second source. If not, include time frame for order.	
Cost	
MDL study required	
MDL study completed	
LCS/MS/MSD spike required	
Project tied to QAPP? Lab has a copy?	
Project Program: DoD QSM, LCG, Client specific, State Specific	
Special QC Requirements: control limits, special criteria	
Certification required	
Standard Operating Procedure available for method	
One time project or on-going	
Special reporting parameters	
SAC created in LIMS	
Spike lists created in LIMS	
RL/MDL data entered into LIMS	

QA Review / Acceptance _____ **Date** _____

Figure 20-3.

Work Flow

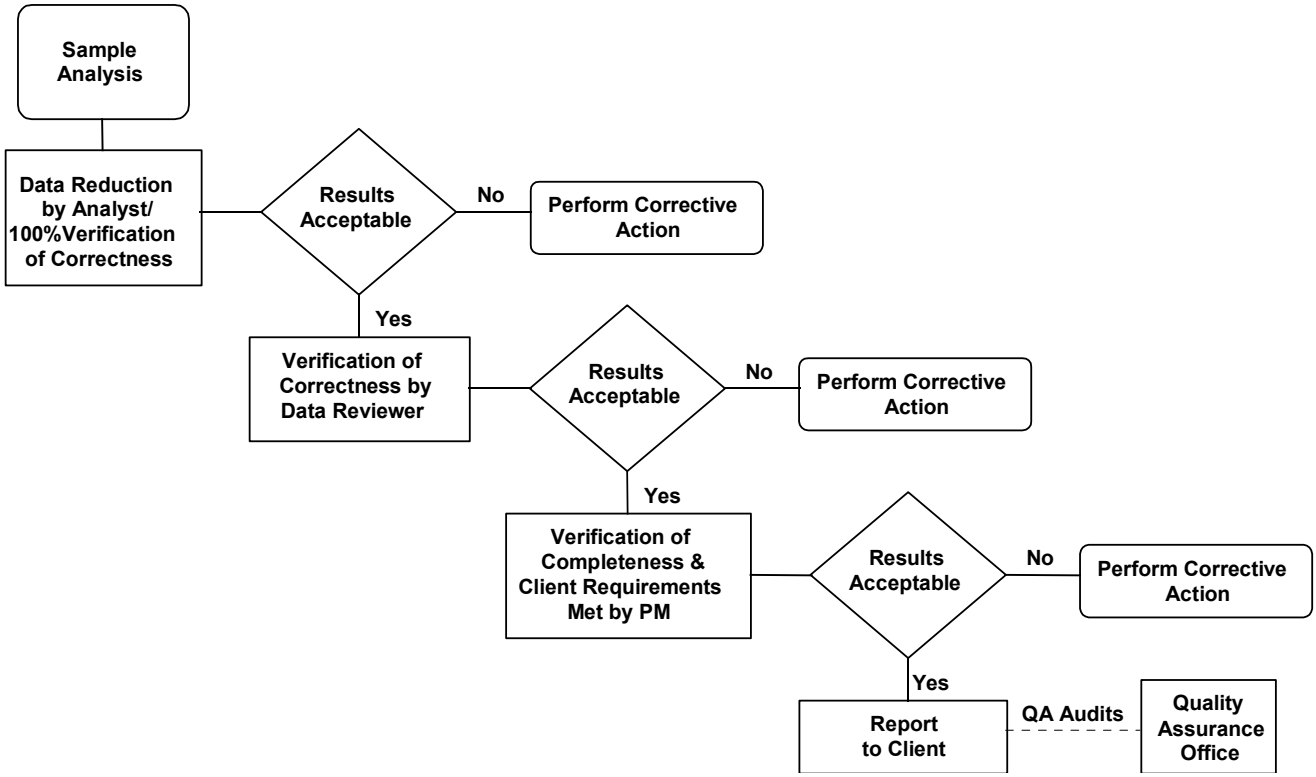

SECTION 21

EQUIPMENT (AND CALIBRATIONS)
(NELAC 5.5.5)

21.1 OVERVIEW

TestAmerica purchases the most technically advanced analytical instrumentation for sample analyses. Instrumentation is purchased on the basis of accuracy, dependability, efficiency and sensitivity. Each laboratory is furnished with all items of sampling, preparation, analytical testing and measurement equipment necessary to correctly perform the tests for which the laboratory has capabilities. Each piece of equipment is capable of achieving the required accuracy and complies with specifications relevant to the method being performed. Before being placed into use, the equipment (including sampling equipment) is calibrated and checked to establish that it meets its intended specification. The calibration routines for analytical instruments establish the range of quantitation. Calibration procedures are specified in laboratory SOPs. A list of laboratory equipment and instrumentation is presented in Table 21-1.

Equipment is only operated by authorized and trained personnel. Manufacturers instructions for equipment use are readily accessible to all appropriate laboratory personnel.

21.2 PREVENTIVE MAINTENANCE

21.2.1 TestAmerica North Canton follows a well-defined program to ensure proper equipment operation and to prevent the failure of laboratory equipment or instrumentation during use. This program of preventive maintenance helps to avoid delays due to instrument failure.

21.2.2 Routine preventive maintenance procedures and frequency, such as lubrication, cleaning, and replacements, should be performed according to the procedures outlined in the manufacturer's manual. Qualified personnel must also perform maintenance when there is evidence of degradation of peak resolution, a shift in the calibration curve, loss of sensitivity, or failure to continually meet one of the quality control criteria.

21.2.2.1 Calibrations, routine maintenance, and adjustments are part of the Analyst and Group Leader responsibilities. However, service contracts may be in place for some instruments to cover any major repairs.

21.2.2.2 High purity gases, reagents, and spare parts are kept on hand to minimize repair time and optimize instrument performance.

21.2.3 Table 21-2 summarizes the schedule for routine maintenance. It is the responsibility of each Group Leader to ensure that instrument maintenance logs are kept for all equipment in his/her department. Preventative maintenance procedures may also be outlined in analytical SOPs or instrument manuals. (Note: For some equipment, the log used to monitor performance is also the maintenance log. Multiple pieces of equipment may share the same log as long as it is clear as to which instrument is associated with an entry.)

21.2.4 Instrument maintenance logs are controlled and are used to document instrument problems, instrument repair and maintenance activities. Maintenance logs shall be kept for all major pieces of equipment. Instrument Maintenance Logbooks may also be used to specify instrument parameters.

21.2.4.1 Documentation must include all major maintenance activities such as contracted preventive maintenance and service and in-house activities such as the replacement of electrical components, lamps, tubing, valves, columns, detectors, cleaning and adjustments.

21.2.4.2 Each entry in the instrument log includes the Analyst's initials, date, a detailed description of the problem (or maintenance needed/scheduled), a detailed explanation of the solution or maintenance performed, and a verification that the equipment is functioning properly (state what was used to determine a return to control, e.g., CCV run on 'date' was acceptable, or instrument recalibrated on 'date' with acceptable verification, etc.)

21.2.4.3 When maintenance or repair is performed by an outside agency, service receipts detailing the service performed can be affixed into the logbooks adjacent to pages describing the maintenance performed. This stapled-in page must be signed across the page entered and the logbook, so it is clear that a page is missing if only half a signature is found in the logbook.

21.2.5 In addition, the maintenance records contain:

- The identification of the instrument/equipment (instrument Serial and Model Number)
- The date the instrument/equipment was put into use.
- If available, the condition when the instrument was received, e.g. new, used, reconditioned

21.2.6 If an instrument requires repair (subjected to overloading or mishandling, gives suspect results, or otherwise has shown to be defective or outside of specified limits) it shall be taken out of operation and tagged as out of service or otherwise isolated until such a time as the repairs have been made and the instrument can be demonstrated as operational by calibration and/or verification or other test to demonstrate acceptable performance. The laboratory shall examine the effect of this defect on previous analyses (refer to Sections 12 and 13).

21.2.7 In the event of equipment malfunction that cannot be resolved, service shall be obtained from the instrument vendor manufacturer, or qualified service technician, if such a service can be tendered. If on-site service is unavailable, arrangements shall be made to have the instrument shipped back to the manufacturer for repair. Back up instruments, which have been approved, for the analysis shall perform the analysis normally carried out by the malfunctioning instrument. If the back up is not available and the analysis cannot be carried out within the needed timeframe, the samples shall be subcontracted using the procedures outlined in Section 8.

If an instrument is sent out for service or transferred to another facility, it must be recalibrated and verified (including new initial MDL study) prior to return to lab operations.

21.3 SUPPORT EQUIPMENT

This section applies to all devices that may not be the actual test instrument, but are necessary to support laboratory operations. These include but are not limited to balances, ovens, refrigerators, freezers, incubators, water baths, field sampling devices, temperature measuring devices, dispensing devices, if quantitative results are dependent on their accuracy, as in standard preparation and dispensing or dilution into a specified volume. All raw data records associated with the support equipment are retained to document instrument performance.

21.3.1 Weights and Balances

The accuracy of the balances used in the laboratory is checked every working day, before use. All balances are placed on stable counter tops.

Each balance is checked prior to use with at least two certified ASTM Type 1 weights spanning its range of use (weights that have been calibrated to ASTM Type 1 weights may also be used for daily verification). ASTM Type 1 weights used only for calibration of other weights (and no other purpose) are inspected for corrosion, damage or nicks at least annually and if no damage is observed, they are calibrated at least every five years by an outside calibration laboratory. Any weights (including ASTM Type 1) used for daily balance checks or other purposes are recalibrated/recertified annually to NIST standards (this may be done internally if laboratory maintains “calibration only” ASTM Type 1 weights).

All balances are serviced annually by a qualified service representative, who supplies the laboratory with a certificate that identifies traceability of the calibration to the NIST standards.

All of this information is recorded in logs, and the recalibration/recertification certificates are kept on file. Reference SOP NC-QA-015, Equipment Monitoring and Thermometer Calibration. A list of balances is in Table 21.2.

21.3.2 pH, Conductivity, and Turbidity Meters

The pH meters used in the laboratory are accurate to ± 0.1 pH units, and have a scale readability of at least 0.05 pH units. The meters automatically compensate for the temperature, and are calibrated with at least two working range buffer solutions before each use.

Conductivity meters are also calibrated before each use with a known standard to demonstrate the meters do not exceed an error of 1% or one umhos/cm.

Turbidity meters are also calibrated before each use. All of this information is documented in logs.

Consult pH and Conductivity, and Turbidity SOPs for further information.

21.3.3 Thermometers

All thermometers are calibrated on an annual basis with a NIST-traceable thermometer. IR thermometers, digital probes and thermocouples are calibrated quarterly.

The NIST thermometer is recalibrated every three years (unless thermometer has been exposed to temperature extremes or apparent separation of internal liquid) by an approved outside service and the provided certificate of traceability is kept on file. The NIST thermometer has increments of 0.2 ºC, and has a range applicable to all method and certification requirements. The NIST traceable thermometer is used for no other purpose than to calibrate other thermometers.

All of this information is documented in logsheets. Monitoring method-specific temperatures, including incubators, heating blocks, water baths, and ovens, is documented in method-specific logsheets. More information on this subject can be found in SOP NC-QA-015, Equipment Monitoring and Thermometer Calibration.

21.3.4 Refrigerators/Freezer Units, Waterbaths, Ovens and Incubators

The temperatures of all refrigerator units and freezers used for sample and standard storage are monitored each working day (seven days a week for DOD labs).

Ovens, waterbaths and incubators are monitored on days of use.

All of this equipment has a unique identification number, and is assigned a unique thermometer for monitoring.

Sample storage refrigerator temperatures are kept between or $4 \pm 2^{o}C$.

Specific temperature settings/ranges for other refrigerators, ovens waterbaths, and incubators can be found in method specific SOPs.

All of this information is documented in Daily Temperature Logsheets posted on each unit and method-specific logbooks.

21.3.5 Autopipettors, Dilutors, and Syringes

Mechanical volumetric dispensing devices including burettes (except Class A Glassware) are checked for accuracy at least quarterly. Glass micro-syringes are considered the same as Class A glassware.

The laboratory maintains a sufficient inventory of autopipettors, and dilutors of differing capacities that fulfill all method requirements.

These devices are given unique identification numbers, and the delivery volumes are verified gravimetrically, at a minimum, on a quarterly basis.

Any device not regularly verified cannot be used for any quantitative measurements.

Micro-syringes are purchased from Hamilton Company. Each syringe is traceable to NIST. The laboratory keeps on file an "Accuracy and Precision Statement of Conformance" from Hamilton attesting established accuracy.

21.3.6 Field Sampling Devices (ISCO Autosamplers)

Each autosampler (ISCO) is assigned a unique identification number in order to keep track of the calibration. This number is recorded on the sampling documentation in a logbook.

The autosampler is calibrated semi-annually by setting the sample volume to 100ml and recording the volume received. The results are filed in a logbook/binder. The autosampler is programmed to run three cycles, and each of the three cycles is measured into a beaker to verify 100 ml are received.

If the RSD (Relative Standard Deviation) between the three cycles is greater than 20%, the procedure is repeated. If the result is still greater than 20%, the following options may be employed:

1) The unit is taken out of service.
2) The unit is used to pull composite samples only over a 24-hour period.

The results of this check are kept in a logbook/binder.

21.4 INSTRUMENT CALIBRATIONS

Calibration of analytical instrumentation is essential to the production of quality data. Strict calibration procedures are followed for each method. These procedures are designed to determine and document the method detection limits, the working range of the analytical instrumentation and any fluctuations that may occur from day to day.

Sufficient raw data records are retained to allow an outside party to reconstruct all facets of the initial calibration. Records contain, but are not limited to, the following: calibration date, method, instrument, analyst(s) initials or signatures, analysis date, analytes, concentration, response, type of calibration (Avg RF, curve, or other calculations that may be used to reduce instrument responses to concentration.)

Sample results must be quantitated from the initial calibration and may not be quantitated from any continuing instrument calibration verification unless otherwise required by regulation, method or program.

If the initial calibration results are outside of the acceptance criteria, corrective action is performed and any affected samples are reanalyzed if possible. If the reanalysis is not possible, any data associated with an unacceptable initial calibration will be reported with appropriate data qualifiers (refer to Section 13).

Note: Instruments are calibrated initially and as needed after that and at least annually.

CALIBRATION STANDARDS

Calibration standards are prepared using the procedures indicated in the Reagents and Standards section of the determinative method SOP. However, the general procedures are described below.

21.4.1.1 For each analyte and surrogate (if applicable) of interest, prepare calibration standards at the minimum number of concentrations as stated in the analytical methods. If a reference or mandated method does not specify the number of calibration standards, the minimum number is three, not including blanks or a zero standard. All of the standard solutions are prepared using Class A volumetric glassware, calibrated pipettes, and/or microsyringes and appropriate laboratory quality solvents and stock standards.

21.4.1.2 Standards for instrument calibration are obtained from a variety of sources. All standards are traceable to NIST whenever possible. Dilution standards are prepared from stock standards purchased from commercial suppliers. A standard log is maintained for each department, containing concentration, date of receipt, date of standard preparation, any dilutions made, lot number, supplier, type of solvent and a unique code number to identify the standard.

21.4.1.3 The lowest concentration calibration standard that is analyzed during an initial calibration must be at or below the stated reporting limit for the method based on the final volume of extract (or sample).

21.4.1.4 The other concentrations define the working range of the instrument/method or correspond to the expected range of concentrations found in actual samples that are also within the working range of the instrument/method. Results of samples not bracketed by initial instrument calibration standards (within calibration range to 3 significant figures) must be reported as having less certainty, e.g., defined qualifiers or flags (additional information may be included in the case narrative). The lowest calibration standard must be at or below the reporting limit. The exception to these rules is ICP methods or other methods where the referenced method does not specify two or more standards.

21.4.1.5 Given the number of target compounds addressed by some of the organic methods, it may be necessary to prepare several sets of calibration standards, each set consisting of the appropriate number of solutions at different concentrations. The initial calibration will then involve the analysis of each of these sets of the appropriate number of standards.

21.4.1.6 All initial calibrations are verified with a standard obtained from a second source and traceable to a national standard, when available (or vendor certified different lot if a second source is not available). For unique situations, such as air analysis where no other source or lot is available, a standard made by a different analyst would be considered a second source. This verification occurs immediately after the calibration curve has been analyzed, and before the analysis of any samples.

21.4.2 CALIBRATION FOR ORGANIC METHODS (GC, HPLC, GC/MS)

21.4.2.1 Many of the organic analytical methods utilize an internal standard calibration (GCMS and some GC). Because of the complex nature of the multipeak chromatograms produced by the method, some instruments necessitate the use of external standard calibration (most GC and HPLC). Surrogate compounds are included in the calibration processes for all appropriate organic analyses. For more details on the calibration types listed below, refer to SOP CA-Q-S-005, Calibration Curves.

21.4.2.2 Once the operating parameters have been established according to the method, each instrument is calibrated for the appropriate method. The analyst prepares five or more standard solutions at various concentrations containing all of the analytes of interest, internal standards, and surrogates that are appropriate for the method. Note: There are a several EPA methods that have different requirements and are exceptions (e.g. EPA 547) where a minimum of three calibration standards are prepared and analyzed.

21.4.2.3 The standard solutions are introduced into the instrument in the same manner as samples are; whether it be by direct injection, by headspace analysis, or by purge and trap. The calibration factor (CF) for methods that use external standards, and the response factor (RF) for methods that use internal standards are calculated for the five standards.

- External standard calibration involves comparison of instrument responses from the sample to the responses from the target compounds in the calibration standards. Sample peak areas (or peak heights) are compared to peak areas (or heights) of the standards. The ratio of the response to the amount of analyte in the calibration standard is defined as the Calibration factor (CF).

- Internal standard calibration involves the comparison of instrument responses from the target compounds in the sample to the responses of specific standards added to the sample or sample extract prior to injection. The ratio of the peak area (or height) of the target compound in the sample or sample extract to the peak area (or height) of the internal standard in the sample or sample extract is compared to a similar ratio derived for each calibration standard. The ratio is termed the response factor (RF), and may also be known as a relative response factor in other methods.

In many cases, internal standards are recommended. These recommended internal standards are often brominated, fluorinated, or stable isotopically labeled analogs of specific target compounds, or are closely related compounds whose presence in environmental samples is highly unlikely. The use of specific internal standards is available in the method SOP.

Whichever internal standards are employed, the analyst needs to demonstrate that the measurement of the internal standard is not affected by method analytes and surrogates or by matrix interferences. In general, internal standard calibration is not as useful for GC and HPLC methods with non-MS detectors because of the inability to chromatographically resolve many internal standards from the target compounds. The use of MS detectors makes internal standard calibration practical because the masses of the internal standards can be resolved from those of the target compounds even when chromatographic resolution cannot be achieved.

When preparing calibration standards for use with internal standard calibration, add the same amount of the internal standard solution to each calibration standard, such that the concentration of each internal standard is constant across all of the calibration standards, whereas the concentrations of the target analytes will vary. The internal standard solution will contain one or more internal standards and the concentration of the individual internal standards may differ within the spiking solution. Not all internal standards need to be at the same concentration in this solution. The mass of each internal standard added to each sample extract immediately prior to injection into the instrument or to each sample prior to purging must be the same as the mass of the internal standard in each calibration standard. The volume of the solution spiked into sample extracts should be such that minimal dilution of the extract occurs, e.g., 10 uL of solution added to a 1 mL final extract results in only a negligible 1% change in the final extract volume which can be ignored in the calculations.

An ideal internal standard concentration would yield a response factor of one for each analyte. However, this is not practical when dealing with more than a few target analytes. Therefore, as a general rule, the amount of internal standard should produce an instrument response, e.g., area counts, that is no more than 100 times that produced by the lowest concentration of the least responsive target analyte associated with the internal standard. This should result in a minimum response factor of approximately 0.01 for the least responsive target compound. Refer to SOP CA-Q-S-005, Calibration Curves, for specific calculations.

21.4.2.4 Policies regarding the use of calibration standard results for creating the calibration curve are as follows:

- A low calibration standard may be excluded from the calibration if the signal-to-noise ratio or spectral criteria are not suitable. The reporting level must be elevated to be the lowest calibration standard used for calibration.

- The upper calibration standard may be excluded if it saturates the detector or is obviously becoming non-linear. Any sample exceeding the upper standard used in the calibration must be diluted and re-analyzed.

- Mid-calibration standards may not be excluded unless an obvious reason is found, i.e., cracked vial, incorrectly made, etc. The failed standard should be re-run immediately and inserted into the initial calibration. If not useful, recalibration is required.

21.4.2.5 **Percent RSD Corrective Action**

Given the potentially large numbers of analytes that may be analyzed in some methods, it is likely that some analytes may exceed the acceptance limit for the RSD for a given calibration. In those instances, the following steps are recommended, but not required.

21.4.2.5.1 The first step is generally to check the instrument operating conditions. This option will apply in those instances where a linear instrument response is expected. It may involve some trade-offs to optimize performance across all target analytes. For instance, changes to the operating conditions necessary to achieve linearity for problem compounds may cause the RSD for other

compounds to increase, but as long as all analytes meet the RSD limits for linearity, the calibration is acceptable.

21.4.2.5.2 If the RSD for any analyte is greater than the applicable acceptance criteria in the applicable analytical method, the analyst may wish to review the results (area counts, calibration or response factors, and RSD) for those analytes to ensure that the problem is not associated with just one of the initial calibration standards. If the problem appears to be associated with a single standard, that one standard may be reanalyzed and the RSD recalculated. Replacing the standard may be necessary in some cases.

21.4.2.5.3 A third alternative is to narrow the calibration range by replacing one or more of the calibration standards with standards that cover a narrower range. If linearity can be achieved using a narrower calibration range, document the calibration linearity, and proceed with analyses. The changes to the upper end of the calibration range will affect the need to dilute samples above the range, while changes to the lower end will affect the overall sensitivity of the method. Consider the regulatory limits or action levels associated with the target analytes when adjusting the lower end of the range.

Note: When the purpose of the analysis is to demonstrate compliance with a specific regulatory limit or action level, the laboratory must ensure that the method quantitation limit is at least as low as the regulatory limit or action level.

21.4.2.6 Alternatively, the least squares regression may be used to determine linearity. A five-point line must result in a correlation coefficient (r) of 0.990 or better using the least squares method to be considered acceptable.

21.4.2.7 Instead of a linear curve model (either Average RF or least squares regression), a second order curve (Quadratic) may be used (and preferred) as long as it contains at least six data points. As a rule of thumb, if there is a consistent trend in RFs (or CFs) in the calibration curve, either up or down, then quadratic curve fit may be indicated as the preferred calibration routine for that analyte. The coefficient of determination (COD or r^2) for the quadratic curve must be at least 0.99 for it to be considered acceptable. For more details on the calculations see Calibration Curve SOP CA-Q-S-005. Some limitations on the use of quadratic curve fits:

21.4.2.7.1 Care MUST be exercised to assure that the results from this equation are real, positive, and fit the range of the initial calibration.

21.4.2.7.2 They **may not** be used to mask instrument problems that can be corrected by maintenance. (Not to be used where the analyte is normally found to be linear in a properly maintained instrument).

21.4.2.7.3 They **may not** be used to compensate for detector saturation. If it is suspected that the detector is being saturated at the high end of the curve, remove the higher concentration standards from the curve and try a 1st order fit or average RF.

21.4.3 Calibration for Inorganic Analyses

EPA Method 7000 from EPA SW-846 is a general introduction to the quality control requirements for metals analysis. For inorganic methods, quality control measures set out in the individual methods and in the *Standard Methods for the Examination of Water and Wastewater* (20th Edition) may also be included. Standard Operating Procedures for the analysis and the quality control documentation measures are available electronically on the public drive.

In general, inorganic instrumentation is calibrated with external standards. Some exceptions would be Inductively Coupled Plasma (ICP), Inductively Coupled Plasma Mass Spec (ICPMS), and Ion Chromatography Mass Spec (ICMS). These analyses may use an internal standard to compensate for viscosity or other matrix effects. While the calibration procedures are much the same for inorganics as they are for organics, CF's or RF's are not used. The calibration model in Section 21.4.2.6 is generally used for most methods, however in some instances the model from Section 21.4.2.7 may be used. A correlation coefficient (r) of 0.995 or greater must be used to accept a calibration curve generated for an inorganic procedure. Correlation coefficients are determined by hand-held scientific calculators or by computer programs [state what your lab uses] and documented as part of the calibration raw data. Coefficients of calibration curves used for quantitation must be documented as part of the raw data. Curves are not allowed to be stored in calculator memories and must be written on the raw data for the purposes of data validation.

21.4.3.1 "Calibrations" for titrimetric analyses are performed by standardizing the titrants against a primary standard solution. See specific methods in *Standard Methods for the Examination of Water and Wastewater* (20th Edition) for more information.

21.4.3.2 Spreadsheets that are used for general chemistry calculations must have all cells containing calculations locked to prevent accidental changes to the calculations.

21.4.3.3 Instrument technologies, e.g., ICP, with validated techniques from the instrument manufacturer or other methods using a zero point and single point calibration require the following:

21.4.3.3.1 The instrument is calibrated using a zero point and a single point calibration standard.

21.4.3.3.2 Sample results within the established linear range do not need to be qualified.

21.4.3.3.3 The linearity is verified at a frequency established by the manufacturer or method.

21.4.4 Calibration Verification

The calibration relationship established during the initial calibration must be verified at periodic intervals as specified in the laboratory method SOPs in accordance with the referenced analytical methods and NELAC (2003) standard, Section 5.5.5.10. The process of calibration verification applies to both external standard and internal standard calibration techniques, as well as to linear and non-linear calibration models.

Note: The process of calibration verification referred to is fundamentally different from the approach called "calibration" in some methods. As described in those methods, the calibration

factors or response factors calculated during calibration are used to update the calibration factors or response factors used for sample quantitation. This approach, while employed in other EPA programs, amounts to a daily single-point calibration, and is not appropriate nor permitted in SW-846 chromatographic procedures for trace environmental analyses.

21.4.4.1 Generally, the initial calibrations must be verified at the beginning of each 12-hour analytical shift during which samples are analyzed. (Some methods may specify more or less frequent verifications). The 12-hour analytical shift begins with the injection of the calibration verification standard (or the MS tuning standard in MS methods). The shift ends after the completion of the analysis of the last sample or standard that can be injected within 12 hours of the beginning of the shift.

21.4.4.2 A continuing instrument calibration verification (CCV) must be repeated at the beginning and, for methods that have quantitation by external calibration models, at the end of each analytical batch. Some methods have more frequent CCV requirements see specific SOPs. Most Inorganic methods require the CCV to be analyzed after ever 10 samples.

21.4.4.3 The acceptance limits for calibration verifications can be found in each method SOP. As a rule of thumb: GCMS ± 20%, GC and HPLC ± 15%, Inorganics: ± 10 or 15%. Actual methods may have wider or tighter limits (see the Method SOP for specifics).

21.4.4.4 If the response (or calculated concentration) for an analyte is within the acceptance limits of the response obtained during the initial calibration, then the initial calibration is considered still valid, and the analyst may continue to use the CF, RF or % drift values from the initial calibration to quantitate sample results.

21.4.4.5 If the response (or calculated concentration) for any analyte varies from the mean response obtained during the initial calibration by more than the acceptance criteria, then the initial calibration relationship may no longer be valid. If routine corrective action procedures fail to produce a second consecutive (immediate) calibration verification within acceptance criteria, then either the laboratory has to demonstrate performance after corrective action with two consecutive successful calibration verifications, or a new initial instrument calibration must be performed. However, sample data associated with an unacceptable calibration verification may be reported as qualified data under the following special conditions:

21.4.4.5.1 When the acceptance criteria for the calibration verification are exceeded high, i.e., high bias, and there are associated samples that are non-detects, then those non-detects may be reported. Otherwise, the samples affected by the unacceptable calibration verification shall be reanalyzed after a new calibration curve has been established, evaluated and accepted.

21.4.4.5.2 When the acceptance criteria for the calibration verification are exceeded low, i.e., low bias, those sample results may be reported if they exceed a maximum regulatory limit/decision level. Otherwise, the samples affected by the unacceptable verification shall be reanalyzed after a new calibration curve has been established, evaluated and accepted. Alternatively, a reporting limit standard may be analyzed to demonstrate that the laboratory can still support non-detects at their reporting limit.

21.4.4.6 **Verification of Linear Calibrations**

Calibration verification for linear calibrations involves the calculation of the percent drift or the percent difference of the instrument response between the initial calibration and each subsequent analysis of the verification standard. Use the equations below to calculate % Drift or % Difference, depending on the procedure specified in the method SOP. Verification standards are evaluated based on the % Difference from the average CF or RF of the initial calibration or based on % Drift or % Recovery if a linear or quadratic curve is used.

The Percent Difference is calculated as follows:

$$\% \text{ Difference} = \frac{(\text{CF(v) or RF(v)}) - (\text{Avg. CF or RF})}{(\text{Avg. CF or RF})} \times 100$$

Where: CF(v) or RF(v) = CF or RF from verification standard
Avg. CF or RF = Average CF or RF from Initial Calibration.

The Percent Drift is calculated as follows:

$$\% \text{ Drift} = \frac{\text{Result} - \text{True Value}}{\text{True Value}} \times 100$$

The Percent Recovery is calculated as follows:

$$\% \text{ Recovery} = \frac{\text{Result}}{\text{True Value}} \times 100$$

21.4.4.7 **Verification of a Non-Linear Calibration**

Calibration verification of a non-linear calibration is performed using the percent drift or percent recovery calculations described in Section 21.4.4.6 above.

Regardless of whether a linear or non-linear calibration model is used, if initial verification criterion is not met, then no sample analyses may take place until the calibration has been verified or a new initial calibration is performed that meets the specifications listed in the method SOPs. If the calibration cannot be verified after the analysis of a single verification standard, then adjust the instrument operating conditions and/or perform instrument maintenance, and analyze another aliquot of the verification standard. If the calibration cannot be verified with the second standard, then a new initial calibration is performed.

All target analytes and surrogates, including those reported as non-detects, must be included in periodic calibration verifications for purposes of retention time confirmation and to demonstrate that calibration verification criteria are being met.

All samples must be bracketed by periodic analyses of standards that meet the QC acceptance criteria (e.g., calibration and retention time). The frequency is found in the determinative methods or SOPs.

Note: If an internal standard calibration is being used (basically GCMS) then bracketing standards are not required, only daily verifications are needed. The results from these verification standards must meet the calibration verification criteria and the retention time criteria (if applicable).

21.5 POLICY ON TENTATIVELY IDENTIFIED COMPOUNDS (TICS) – GC/MS ANALYSIS

For samples containing components not associated with the calibration standards, a library search may be made for the purpose of tentative identification. The necessity to perform this type of identification will be determined by the purpose of the analyses being conducted. Data system library search routines should not use normalization routines that would misrepresent the library or unknown spectra when compared to each other.

Note: If the TIC compound is not part of the client target analyte list but is calibrated by the laboratory and is both qualitatively and/or quantitatively identifiable, it will not be reported as a TIC. If the compound is reported on the same form as true TICs, it must be qualified and/or narrated that the reported compound is qualitatively and quantitatively (if verification in control) reported compared to a known standard that is in control (where applicable).

For example, the RCRA permit or waste delisting requirements may require the reporting of non-target analytes. Only after visual comparison of sample spectra with the nearest library searches may the analyst assign a tentative identification. See the following SOPs for guidelines for making tentative identifications (CORP-MS-0001NC, GC/MS Analysis Based on Method 8270C, and CORP-MS-0002NC, Determination of Volatile Organics by GC/MS based on Method 8260B & 8260A).

21.6 POLICY ON GC/MS TUNING

Prior to any GCMS analytical sequence, including calibration, the instrument parameters for the tune and subsequent sample analyses within that sequence must be set.

Prior to tuning/auto-tuning the mass spec, the parameters may be adjusted within the specifications set by the manufacturer or the analytical method. These generally don't need any adjustment but it may be required based on the current instrument performance. If the tune verification does not pass it may be necessary to clean the source or perform additional maintenance. Any maintenance is documented in the maintenance log.

21.6.1 The concentration of the BFB or DFTPP must be at or below the concentrations that are referenced in the analytical methods. Part of the purpose of the tune is to demonstrate sensitivity and analyzing solutions at higher concentrations does not support this purpose. Tune failures may be due to saturation and a lower BFB/DFTPP concentration may be warranted.

21.6.2 Tune evaluations usually utilize the "Autofind" function and are set up to look at the apex +/- 1 scan and average the three scans. Background correction is required prior to the

start of the peak but no more than 20 scans before. Background correction cannot include any part of the target peak.

21.6.3 Other Options or if Auto Tune Fails:

21.6.3.1 Sometimes the instrument does not always correctly identify the apex on some peaks when the peak is not perfectly shaped. In this case, manually identify and average the apex peak +/- 1 scan and background correct as in 21.6.4 above. This is consistent with EPA 8260 and 8270.

21.6.3.2 Or the scan across the peak at one half peak height may be averaged and background corrected. This is consistent with Standard Methods 6200, EPA 624 and EPA 625.

21.6.3.3 Adjustments such as adjustments to the repeller and ion focus lenses, adjusting the EM Voltage, etc. may be made prior to tune verification as long as all of the subsequent injections in the 12-hour tune cycle are analyzed under the same MS tune settings and it is documented in the run sequence log and/or maintenance log that an adjustment was made. Excessive adjusting (more than two tries) without clear documentation is not allowed. Necessary maintenance is performed and documented in the Instrument Log.

21.6.3.4 A single scan at the Apex (only) may also be used for the evaluation of the tune. For SW 846 and EPA 600 series methods, background correction is still required.

21.6.3.5 Cleaning the source or other maintenance may be performed and then follow steps for tune evaluation above. Note: If significant maintenance was performed, see methods 8000B or 8000C then the instrument may require recalibration prior to proceeding.

21.6.4 Tune evaluation printouts must include the chromatogram and spectra as well as the Tune evaluation information. In addition, the verifications must be sent directly to the printer or pdf file (no screen prints for DFTPP or BFB tunes). This ability should be built into the instrument software.

21.6.5 All MS tune settings must remain constant between running the tune check and all other samples. It is recommended that a separate tune method not be used, however a separate method may be used as long as the MS conditions between the methods are the same as the sample analysis method and tracked so any changes that are made to the analysis method are also made to the tune method.

Table 21-1.

Example - Laboratory Equipment and Instrumentation

Instrument Type	Manufacturer	Model	Auto-sampler
Metals ICP	Thermo Jarrell Ash	Trace Analyzer 61E	Yes
	Thermo Jarrell Ash	Trace Analyzer 61E	Yes
Metals ICP/MS	Perkin Elmer (I-7)	ELAN 6100	Yes
	Thermo (I-8)	Series 2	Yes
Metals Mercury Analyzer	Leeman (CVAA)	PS200 II	Yes
	Leeman (CVAF) Low Level	Hydra AF Gold+, Model #112-00067-1	Yes
	Leeman (CVAA)	Hydra AA	Yes
GC/MS Semivolatiles	Agilent A4AG2	5975-C	NA
	Hewlett-Packard HP7	5973-6890	NA
	Hewlett-Packard HP8	5973-6890	NA
	Hewlett-Packard HP9	5973-6890	NA
	Hewlett-Packard HP10	5973-6890	NA
GC/MS Volatiles	Hewlett-Packard (UX2)	5971A-5890	Yes
	Hewlett-Packard (HP6)	5973-6890	Yes
	Hewlett-Packard (UX7)	5973-6890	Yes
	Hewlett-Packard (UX8)	5973-6890	Yes
	Hewlett-Packard (UX9)	5973-6890	Yes
	Hewlett-Packard (UX10)	5973-6890	Yes
	Agilent (UX11) (former HP)	5973-6890	Yes
	Agilent (UX12)	5973-6890	Yes
	Agilent (UX14)	5973-6890	Yes
	Agilent (UX15)	5973-6890	Yes
	Agilent (UX16)	5975-6890	Yes
GC/MS Volatiles Autosampler	OI Analytical (UX2)	4552	
	OI Analytical (HP6)	4552	
	OI Analytical (UX7)	4552	
	OI Analytical (UX8)	4552	
	OI Analytical (UX9)	4552	
	OI Analytical (UX10)	4552	
	OI Analytical (UX11)	4552	
	OI Analytical (UX12)	4552	
	OI Analytical (UX14)	4552	
	OI Analytical (UX15)	4552	
	OI Analytical (UX16)	4552	

Instrument Type	Manufacturer	Model	Auto-sampler
GC/MS Volatiles Purge and Trap	OI Analytical (UX2)	4560	
	OI Analytical (HP6)	4560	
	OI Analytical (UX7)	4660	
	OI Analytical (UX8)	4560	
	OI Analytical (UX9)	4560	
	OI Analytical (UX10)	4560	
	OI Analytical (UX11)	4560	
	OI Analytical (UX12)	4560	
	OI Analytical (UX14)	4560	
	OI Analytical (UX15)	4660	
	OI Analytical (UX16)	4660	
	EST (spare)	Encon	
WC Ion Chromatograph	Dionex	DX-320	NA
	Dionex	DX-120	NA
WC TOC	OI Analytical	1010 TOC Analyzer	
WC TOX	Thermo Electron	1200-S/N 973515	
	Thermo Electron	1200-S/N 2001.0174	
	Thermo Electron	1200-S/N 2005.0234	
WC UV/VIS	Milton Roy	Spectronic 401	No
	Genesys	Spectronic 20	No
WC Autotitrator	Man-Tech	PC – Titrate	
WC pH Meter	Orion pH Meter	250A	
	Orion (Ammonia ISE)	520A	
WC Dissolved Oxygen Meter	YSI	52C E	No
WC Turbidimeter	HF Scientific	Micro 100	No
WC BOD	Labtronics, Inc.	BOD	
WC Block Digester	Andrews	2210 Phenol	
	Andrews	2205 Ammonia	
	Lachat	BD46 TKN	

Instrument Type	Manufacturer	Model	Auto-sampler
WC Cyanide	Midi Serial #1000-99-01	PRG-2520-BL	
WC Conductivity	Man-Tech	4310	
WC Flashpoint	Petrolab (199443)	Petrotest	
	Herzog	HFP 339	
WC Discrete Analyzer	Kone	Konelab 200	
	Kone	Konelab 250	
WCResidual Chlorine Meter	Hanna	HI 93701	
	Hanna	HI 93701	
WC TRAACS	Bran & Luebbe	800	
Ext. 6-Position Accelerated Soxhlet Extractor	Gerhardt Soxtherm	6 units	
Extractions Sonicators	Misonix	3000	NA
	Fisher	550	NA
GC Semivolatiles	Hewlett-Packard (P1)	6890 EPC & Dual ECD Y-Splitter	Yes
	Hewlett-Packard (P2)	6890 EPC & Dual ECD Y-Splitter	Yes
	Hewlett-Packard (P3)	6890 EPC & Dual ECD Y-Splitter	Yes
	Hewlett-Packard (P4)	6890 EPC & Dual ECD Y-Splitter	Yes
	Hewlett-Packard (P5)	6890 EPC & Dual ECD Y-Splitter	Yes
	Hewlett-Packard (P6)	6890 EPC & Dual FID	Yes
	Hewlett-Packard (P7)	6890 EPC & Dual FID	Yes
	Hewlett-Packard (P9)	6890 EPC & Dual ECD Y-Splitter	Yes
	Hewlett-Packard (P10)	6890 EPC & Dual ECD Y-Splitter	Yes

Instrument Type	Manufacturer	Model	Auto-sampler
GC Semivolatiles (Cont'd)	Hewlett-Packard (P11)	6890 EPC & Dual ECD Y-Splitter	Yes
GC Semivolatiles HPLC	Hewlett-Packard (L2)	HPLC 1100	Yes
	Hewlett-Packard (L3)	HPLC 1100	Yes
GC Volatiles	Agilent (A)	6890 PID/FID	Yes
	Hewlett-Packard (O)	6890 Dual PID/Hall	Yes
	Hewlett-Packard (P)	6890 PID/HALL	Yes
	Hewlett-Packard (Y)	6890N PID/FID	Yes
	Hewlett-Packard (P8)	6890 EPC & Dual FID	Yes
GC Volatiles Auto Sampler	OI Analytical (O)	Archon	
	OI Analytical (Y)	4552	
	Varian (A)	Archon	
	Varian (P)	4552	
GC Volatiles Purge & Trap	Tekmar (O)	4560	
	Tekmar (P)	3000	
	OI Analytical (A)	4560	
	OI Analytical (Y)	3000	
GM Bedford	Agilent	6890N	Yes
	Agilent	6890N	Yes
	Agilent	6890N	Yes
	Misonix Sonicator	3000	NA

Table 21-2.

Example – Laboratory Balance Inventory

Instrument	Location	Manufacturer	Model Number	Type	Serial Number
B001	MS Volatiles	OHAUS	E400D	Top Loader	3317
B002	MS Volatiles	Mettler	AC 100	Analytical	B01177
B005	Metals	Sartarius	R300S	Analytical	38020045
B006	Wet Chemistry	American Scientific	SP180	Analytical	2904794
B007	High Hazard Room	American Scientific	ER-180A	Analytical	2904257
B008	Waste Building (no log book)	Howe Richardson	XL 5401		A029390
B009	Leachates (Extractions)	OHAUS	GT 4800	Top Loader	1687
B010	Wet Chemistry	Mettler	PJ 3600	Top Loader	G29475
B011	Extractions	American Scientific	SP 180	Analytical	2902127
B013	Extractions	OHAUS	TS 4KD	Top Loader	1936
B018	GC Volatiles	American Scientific	DTL 350	Analytical	10594
B019	GC Volatiles	Sartarius	L2200S	Top Loader	36020158
B022	Wet Chemistry	Mettler	PM300	Top Loader	F03040
B023	Wet Chemistry	OHAUS	TS 400S	Top Loader	3608
B024	Wet Chem Prep Room	Mettler	AE 100	Analytical	C25750
B025	Extractions	Mettler	PM 4600	Top Loader	G64548
B027	Wet Chemistry	American Scientific	SP 180	Analytical	2904154
B028	Wet Chemistry	Denver Instrument	M Series	Analytical	P119656
B030	Metals (new 9/5/6)	AND	EK410i	Top Loader	P1841870
B031	Metals (new 9/5/6)	AND	EK410i	Top Loader	P1841872
B032	Metals	OHAUS	ARC120	Top Loader	H28312
B033	Leachates (Extractions)	OHAUS	ARC120	Top Loader	H27612

Table 21-3.

Example – Laboratory Refrigerators, Freezers, Ovens, Thermometers, Steambaths, Hotblocks, and Hotplates

Instrument Type	Manufacturer / Model	Location	Tracking No.
Refrigerators	American Scientific CLP	BNA	R015
	VWR Scientific	BNA	R027
	Frigidaire	BNA	R031
	GE GPC	Extractions	R007
	Hotpoint “D”	Extractions	R008
	GE	Extractions	R010
	Hotpoint CLP Pest.	GC Semi	R016
	VWR	GC Semi	R021
	Frigidaire	GC Semi	R030
	Kelvinator	GC Semi	R032
	BB	GC VOA	R017
	True	MS Voa	R028
	Cryo Frig A CLP	MS Voa	R001
	Mr. Winter	MS Voa	R002
	#203 Enseco	MS Voa	R003
	Hotpoint “OO”	Org Haz	R012
	Kelvinator	Org Prep	R011
	Frigidaire	R&D	R013
	Sample Walk-In 2nd	Sample Receiving	R018
	LaCross	Sample Receiving	R019
	Walk-In CLP	Sample Receiving	R020
	True	Sample Receiving	R025
	Baxter Cryo	Sample Receiving	R033
	True	Wet Chem	R024
	Frigidaire BOD	Wet Chem	R023
	Baxter Cryo Fridge BOD	Wet Chem	R029
	Frigidaire BOD	Wet Chem	R034
	Fisher Scientific 307 BOD	Wet Chem	R004
Ovens	TDS	Wet Chem	O-001
	WWR	Wet Chem	O-002
	TSS	Wet Chem	O-003
	TDS Evap	Wet Chem	O-004
	Lindberg/Blue	Wet Chem	O-006

Instrument Type	Manufacturer / Model	Location	Tracking No.
Freezers	Kenmore	BNA	F005
	Frigidaire	BNA	F012
	Hotpoint "D"	Extractions	F007
	Magic Chef	GC Semi	F004
	Marvel HPLC	GC Semi	F013
	GE	GC VO	F002
	Kenmore Side/Side	MS Voa	F001
	Frigidaire	MS Voa	F011
	Frigidaire	MS Voa	F016
	Kelvinator	Org Prep	F003
	Crosley	Receiving - Warehouse	F008
	GE	Receiving – Warehouse	F009
	Frigidaire	Receiving - Warehouse	F014
NIST Thermometers	Ertco S/N 69887 Product 15041D		92564
	Ertco S/N NB179010 Product N/A		167513
	Ertco S/N 3053 Product ASTM 068C-BF		15169121
	Ertco S/N 3243 Product ASTM 62C		163757
Steambaths		Extractions	A
		Extractions	B
		Extractions	C
Hotblocks		Metals	0
		Metals	1
		Metals	2
		Metals	3
		Metals	4
		Metals	A1
		Metals	A2
		Metals	B1
		Metals	C1
		Metals	C2
		Metals	C3
		Metals	C4
Hotplate		Metals	1-A
		Metals TCLP	9 K

Table 21-4.

Example: Schedule of Routine Maintenance
(Refer to manufacturer's instructions for each instrument to identify and perform maintenance operations)

INSTRUMENT MAINTENANCE SCHEDULE
ION CHROMATOGRAPH

As Needed	Daily	Weekly	Monthly
Clean micro-membrane suppressor when decreases in sensitivity are observed.	Check plumbing/leaks.	Check pump heads for leaks.	Check all air and liquid lines for discoloration and crimping, if indicated.
Check fuses when power problems occur.	Check gases.	Check filter (inlet)	Check/change bed supports guard and analytical columns, if indicated.
Reactivate or change column when peak shape and resolution deteriorate or when retention time shortening indicates that exchange sites have become deactivated.	Check pump pressure.		
De-gas pump head when flow is erratic.	Check conductivity meter.		

INSTRUMENT MAINTENANCE SCHEDULE
TOTAL ORGANIC HALIDE ANALYZER

Daily	As Needed
Check electrodes for damage; polish the electrodes.	Examine and clean or replace pyrolysis tube.
Replace dehydrating fluid and electrolyte fluid.	Clean titration cell.
Clean quartz boat.	Observe gas flow.
Observe check valves during use for backfeed.	Replace reference electrode fluid.
At end of each day of use, wash out absorption module, empty electrolyte and fill cell with DI water. Empty dehydrator tube	Change quartz wool.
Perform cell performance check.	Replace O-rings and seals.

INSTRUMENT MAINTENANCE SCHEDULE
HIGH PRESSURE LIQUID CHROMATOGRAPH

Daily	As Needed
Check level of solution in reservoirs. If adding, verify that solvent is from the same source. If changing, rinse gas and delivery lines to prevent contamination of the new solvent.	Replace columns when peak shape and resolution indicate that chromatographic performance of column is below method requirements.
Check gas supply.	Oil autosampler slides when sample does not advance.
Flush with an appropriate solvent to remove all bubbles.	Rinse flow cell with 1N nitric acid if sensitivity low.
Pre-filter all samples.	Change pump seals when flow becomes inconsistent.
	Repack front end of column Backflush column.

INSTRUMENT MAINTENANCE SCHEDULE
ICP AND ICP/MS

Daily	Monthly or As Needed	Semi-Annually	Annually
Check vacuum pump gage. (<10 millitorr)	Clean plasma torch assembly to remove accumulated deposits	Change vacuum pump oil	Notify manufacturer service engineer for scheduled preventive maintenance service
Check cooling water supply system is full and drain bottle is not full. Also drain tubing is clear, tight fitting, and has few bends.	Clean nebulizer and drain chamber; keep free flowing to maintain optimum performance	Replace coolant water filter (may require more or less frequently depending on quality of water)	
Check nebulizer is not clogged	Clean filters on back of power unit to remove dust		
Check capillary tubing is clean and in good condition	Replace when needed: - peristaltic pump tubing - sample capillary tubing - autosampler sipper probe		
Check peristaltic pump windings are secure	- Check yttrium position - Check O-rings - Clean/lubricate pump rollers		
Check high voltage switch is on			
Check torch, glassware, aerosol injector tube, and bonnet are clean			

INSTRUMENT MAINTENANCE SCHEDULE
CVAS AND CVAFS

Daily	As Needed	Annually
Change drying tube	Change pump tubing	Change Hg lamp
Check pump tubing/drain tubing	Check/change Hg lamp	
Check gas pressure	Clean optical cell	
Check aperture reading Check tubing	Lubricate pump	

INSTRUMENT MAINTENANCE SCHEDULE
GAS CHROMATOGRAPH

Daily *	As Needed
Check for sufficient supply of carrier and detector gases. Check for correct column flow and/or inlet pressures.	Replace front portion of column packing or break off front portion of capillary columns. Replace column if this fails to restore column performance, or when column performance (e.g., peak tailing, poor resolution, high backgrounds, etc.) indicates it is required. Quarterly FID: clean detector, only as needed—not quarterly/or semi-annually.
Check temperatures of injectors and detectors. Verify temperature programs by RT shift.	Change glass wool plug in injection port and/or replace injection port liner when front portion of column packing is changed or front portion of capillary column is removed.
Clean injector port weekly for TPH for 8015B, when breakdown fails; otherwise, when RT shift or bad samples run.	Annually FID: replace flame tip, only as needed. Only as needed: ECD--detector cleaning and re-foiling, whenever loss of sensitivity, erratic response, or failing resolution is observed
Check baseline level during analysis of run—not maintenance.	Perform gas purity check (if high baseline indicates that impure carrier gas may be in use).

Watched weekly: check reactor temperature of electrolytic conductivity detector. Inspect chromatogram to verify symmetrical peak shape and adequate resolution between closely eluting peaks, when analyzing pesticides; part of analysis—not maintenance. Clip column leader when chromatography looks bad—not daily.	Replace or repair flow controller if constant gas flow cannot be maintained. Replace fuse. Reactivate external carrier gas dryers. Detectors: clean when baseline indicates contamination or when response is low. FID: clean/replace jet, replace ignitor. ECD: follow manufacturer's suggested maintenance schedule. Reactivate flow controller filter dryers when presence of moisture is suspected. HP 7673 Autosampler: replace syringe, fill wash bottle, dispose of waste bottle contents.

*No daily maintenance done on any instrument/method. Weekly change IPL on TPH instrument. Everything else is on an "as needed" basis.

INSTRUMENT MAINTENANCE SCHEDULE
MASS SPECTROMETER

Daily	Weekly	As Needed	Quarterly	Annually
Check for sufficient gas supply. Check for correct column flow and/or inlet pressure.	Check mass calibration (PFTBA or FC-43)	Check level of oil in mechanical pumps and diffusion pump if vacuum is insufficient. Add oil if needed between maintenance.	Check ion source and analyzer (clean, replace parts as needed)	Replace the exhaust filters on the mechanical rough pump every 1-2 years.
Check temperatures of injector, detector. Verify temperature programs.		Replace electron multiplier when the tuning voltage approaches the maximum and/or when sensitivity falls below required levels.	Check vacuum, relays, gas pressures and flows	
Check inlets, septa		Clean Source, including all ceramics and lenses - the source cleaning is indicated by a variety of symptoms including inability of the analyst to tune the instrument to specifications, poor response, and high background contamination.	Change oil in the mechanical rough pump.	
Check baseline level		Repair/replace jet separator.		
Check values of lens voltages, electron multiplier, and relative abundance and mass assignments of the calibration compounds.		Replace filaments when both filaments burn out or performance indicates need for replacement.		

INSTRUMENT MAINTENANCE SCHEDULE
TRAACS AUTO ANALYZER

As Needed	Daily
Replaces air filter when progressive loss of air pressure is observed.	Check air pressure gauge (22 ± 2 psi)
Replace air valve tubing when occlusion in tubing is observed	Use recommended washout procedure (at end of analysis operations)
Change all pump tubes (or after 200 hours of pumping time, or after 1000 hours of pumping time)	
Clean sample probe shaft	
Replace pump platens	
Lightly lubricate the linear sample rails (use semi-fluid lubricant)	
Replace colorimeter lamp (or after 2500 hours of use)	

INSTRUMENT MAINTENANCE SCHEDULE
ANALYTICAL/TOP LOADING BALANCES

Daily	Annually
Check using Class 1-verified weights once daily or before use Clean pan and weighing compartment	Manufacturer cleaning and calibration

INSTRUMENT MAINTENANCE SCHEDULE
REFRIGERATORS/WALK-IN COOLERS

Daily	As Needed
Temperatures checked and logged	Refrigerant system and electronics serviced

INSTRUMENT MAINTENANCE SCHEDULE
OVENS

Daily	As Needed
Temperatures checked and logged	Electronics serviced

INSTRUMENT MAINTENANCE SCHEDULE
SPECIFIC DIGITAL ION ANALYZER

Daily	As Needed
Daily when used: • Calibrate with check standards • Inspect electrode daily, clean as needed • Inspect electrode proper levels of filling solutions daily; fill as needed • Clean probe after each use	Electronics serviced

INSTRUMENT MAINTENANCE SCHEDULE
TURBIDIMETER

Daily	Monthly	As Needed
Daily when used: • Adjust linearity on varying levels of NTU standards. Standardize with NTU standards • Inspect cells	Clean instrument housing	Electronics serviced

INSTRUMENT MAINTENANCE SCHEDULE
DISSOLVED OXYGEN METER

Daily	As Needed
Daily when used: • Calibrate with saturated air • Check probe membrane for deterioration • Clean and replace membrane with HCl solution	• Electronics serviced • Clean and replace membrane with HCl solution

INSTRUMENT MAINTENANCE SCHEDULE
CONDUCTANCE METER

Daily	As Needed
Daily when used: • Check probe and cables • Inspect conductivity cell	Electronics serviced

INSTRUMENT MAINTENANCE SCHEDULE
CHEMICAL OXYGEN DEMAND (COD) REACTOR [1]

Daily	As Needed
Daily when used: • Calibrate with check standards	Electronics serviced

INSTRUMENT MAINTENANCE SCHEDULE
SPECTROPHOTOMETER

As Needed	Daily	Monthly	Annually
Dust the lamp and front of the front lens	Check the zero % adjustment	Clean windows	Check instrument manual
	Clean sample compartment		Perform wavelength calibration
	Clean cuvettes		Replace lamp annually or when erratic response is observed
			Clean and align optics

INSTRUMENT MAINTENANCE SCHEDULE
pH METER

As Needed	Daily
Clean electrode	Inspect electrode. Verify electrodes are properly connected and filled
Refill reference electrode	Inspect electrode proper levels of filling solutions. Make sure electrode is stored in buffer

INSTRUMENT MAINTENANCE SCHEDULE
TOTAL ORGANIC CARBON ANALYZER

Daily	As Needed	Weekly	Monthly
Check: • Oxygen supply • Persulfate supply • Acid supply • Carrier gas flow rate (~ 150 cc/min) • IR millivolts for stability (after 30 min. warm-up) • Reagent reservoirs	Check injection port septum after 50-200 runs Tube end-fitting connections after 100 hours or use Indicating drying tube NDIR zero, after 100 hours of use Sample pump, after 2000 hours for use Digestion vessel/condensation chamber, after 2000 hours of use Permeation tube, after 2000 hours of use NDIR cell, after 2000 hours of use Change pump tubing	Check liquid-flow-rate-pump-tubing conditions on autosampler Check injection port septum	Clean digestion vessel Clean condenser column Do the leak test

Instrument Maintenance Schedule
Digestion Block

Annually
Check temperature with NIST thermometer

Instrument Maintenance Schedule
Flash Point Tester

Daily
Check tubing Clean sample cup each use
Check gas
Clean flash assembly
Check stirrer

Table 21-5.

Example: Periodic Equipment Calibrations

Type of Equipment	Calibration Requirements
Balances	• Must be serviced and calibrated annually by an approved vendor. • Calibration must be checked daily or before use by analyst with weight(s) classified as Class 1 (formerly termed Class S) by NIST or Class 1 traceable. Acceptance criteria vary according to weight used and accuracy of balance. Acceptance criteria must be documented in the log. • All Class 1 weights must be certified by an outside vendor every three years. • All non-Class 1 weights must be checked annually against NIST Class 1 weights annually.
Thermometers	• Working glass thermometers must be calibrated against a certified. • NIST thermometer at least annually as described in operation-specific SOPs. • Working non-glass thermometers must be calibrated against a certified NIST thermometer annually as described in operation-specific SOPs. • The NIST thermometer must be recertified every three years.
Refrigerators/ Freezers	• Thermometers must be immersed in a liquid such as mineral oil or glycol. • Temperature of units used for sample or standard storage must be checked daily as described in operation-specific SOPs. Refrigerator acceptance limits: 4°C ± 2°C. Freezer acceptance limits: < - 10°C
Ovens	• Temperature of units must be checked daily or before use. • Acceptance limits vary according to use as described in operation-specific SOPs, andmust be documented in the temperature log.
Micropipettes	• Calibrations are checked gravimetrically as required by the operation-specific SOP. • Must be calibrated at the frequency (normally quarterly) required by the manufacturer at a minimum.
Syringes, Volumetric Glassware and Graduated Glassware	• All syringes and volumetric glassware are purchased as Class A items. • Class A items are certified by the manufacturer to be within ± 1% of the measured volume; therefore, calibration of these items by TestAmerica laboratories is not required. • All analysts are trained in the proper use and maintenance of measuring devices to ensure the measurement of standards, reagents, and sample volumes are within method tolerances.

Table 21-6.

Example: Preventive Maintenance Procedures

SUMMARY OF INORGANIC METHOD CALIBRATIONS

Analysis	Calibration	NPDES [1]		RCRA (SW846) [2]	
		Method	Requirement	Method	Requirement
Acidity	Initial	350.1	Two-level calibration that bracket the expected pH of the sample ± 0.05 pH units of true value	9040B 9045C	2 point calibration ± 0.05 pH units of true value
	Continuing	350.1	One buffer check every 10 samples ± 5% of true value	9040B 9045C	N/A
	Other	350.1	Third point check	9040B 9045C	Third point check
	Ending	350.1	One buffer check ± 5% of true value	9040B 9045C	N/A
Alkalinity, Bicarbonate, Carbonate	Initial	310.1 2320B	2 point calibration of pH meter ± 0.05 pH units of true value	--	N/A
	Continuing	310.1 2320B	N/A	--	N/A
	Ending	310.1 2320B	N/A	--	N/A
Ammonia	Initial	350.1	6 levels including blank, "r" [3] ≥ 0.995	--	N/A
	Continuing	350.1	One level or LCS every 10 samples ± 10% of true value	--	N/A
	Ending	350.1	One level or LCS every 10 samples ± 10% of true value	--	N/A
Arsenic Speciation		N/A	N/A	7063	* Refer to Section 10 of SOP NC-WC-0090

Analysis	Calibration	NPDES [1]		RCRA (SW846) [2]	
		Method	Requirement	Method	Requirement
Biochemical Oxygen Demand (BOD)	Initial	405.1 SM5210B	a. Winkler titration: Iodometric with standard thiosulfate b. Membrane electrode: Read in air and in water with zero dissolved oxygen	--	N/A
	Continuing	405.1 SM5210B	N/A	--	N/A
	Ending	405.1 SM5210B	N/A	--	N/A
Bromide	Initial	300.0A	5 levels plus a blank, "r"[3] ≥ 0.995	9056A	5 levels plus a blank, "r" [3] ≥ 0.995
	Continuing	300.0A	Level every 10 samples ± 10% of true value	9056A	N/A
	Ending	300.0A	N/A	9056A	N/A
Cation Exchange	Initial	N/A	N/A	9081	N/A
	Continuing	N/A	N/A	9081	N/A
	Ending	N/A	N/A	9081	N/A
Chemical Oxygen Demand (COD)	Initial	410.4 SM5220D	5 levels plus a blank"r" [3] ≥ 0.995	--	N/A
	Continuing	410.4 SM5220D	One level every 10 samples ± 10% of true value	--	N/A
	Ending	410.4 SM5220D	One level ± 10% of true value	--	N/A

Analysis	Calibration	NPDES [1]		RCRA (SW846) [2]	
		Method	Requirement	Method	Requirement
Chloride	Initial	300.0A 325.2	5 levels plus blank "r" [3] ≥ 0.995	9056A 9251	Method 9056: 3 levels plus a blank Method 9252: 5 levels plus blank "r" [3] ≥ 0.995
	Continuing	300.0A 325.2	One level every 10 samples ± 10% of true value	9056A 9251	Method 9056: One per batch of 20 samples, ± 10% of true value Method 9252: One level every 10 samples, ± 10% of true value
	Ending	300.0A 325.2	One level every 10 samples ± 10% of true value	9056A 9251	Method 9056 : N/A Method 9252: One level ± 10% of true value
Chromium Cr^{+6}	Initial	3500 Cr-D	3 levels plus blank	7196A	5 levels plus blank "r" [3] ≥ 0.995
	Continuing	3500 Cr-D	One level every 10 samples ± 10% of true value	7196A	One level every 10 samples ± 15%
	Ending	3500 Cr-D	One level ± 10% of true value	7196A	One level ± 15%
Chlorine, Residual	Initial	330.5 SM3500CL-G	N/A	--	N/A
	Continuing	330.5 SM3500CL-G	N/A	--	N/A
	Ending	330.5 SM3500CL-G	N/A	--	N/A

Analysis	Calibration	NPDES [1]		RCRA (SW846) [2]	
		Method	Requirement	Method	Requirement
Conductivity	Initial	120.1 SM2510B	Standard KCl solution	9050A	One level to determine cell constant
	Continuing	120.1 SM2510B	N/A	9050A	N/A
	Ending	120.1 SM2510B	N/A	9050A	N/A
Cyanide (Amenable)	Initial	335.1 SM4500CN-G	6 levels plus blank "r" [3] ≥ 0.995	9012A	6 levels plus blank "r" [3] ≥ 0.995
	Continuing	335.1 SM4500CN-G	One level every 10 samples ± 10% of true	9012A	One mid-level every 10 samples ± 15% of true value
	Ending	335.1 SM4500CN-G	One level ± 10 % of true value	9012A	± 15% of true value
Cyanide (Total)	Initial	335.1/335.2 335.3/335.4 SM4500CU-E	6 levels plus blank "r" [3] ≥ 0.995	9012A	6 levels plus blank "r" [3] ≥ 0.995
	Continuing	335.1/335.2 335.3/335.4 SM4500CU-E	One mid-level every 10 samples ± 10 % of true value	9012A	One mid-level every 10 samples ± 15% of true value
	Ending	335.1/335.2 335.3/335.4 SM4500CU-E	One mid-level ± 10 % of true value	9012A	± 15% of true value
Flashpoint	Initial	--	N/A	1010 ASTM D93-9	p-Xylene reference standard must have flashpoint of 81°F ±2°F
	Continuing	--	N/A	1010 ASTM D93-9	N/A
	Ending	--	N/A	1010 ASTM D93-9	N/A

Analysis	Calibration	NPDES [1]		RCRA (SW846) [2]	
		Method	Requirement	Method	Requirement
Fluoride	Initial	300.0A 340.2	Method 300.0A: 5 levels plus a blank, "r" [3] ≥ 0.995 Method 340.2: 5 levels "r" [3] ≥ 0.995	9056A	3 levels plus a blank
	Continuing	300.0A 340.2	One mid-level every 10 samples ± 10% of true value	9056A	One per batch of 20 samples ± 10% of true value
	Ending	300.0A 340.2	One mid-level ± 10% of true value	9056A	N/A
Hardness	Initial	130.2 2340B	Method 130.2: Standardize titrant Method 2340B: See ICP Metals 200.7	--	N/A
	Continuing	130.2 2340B	Method 130.2: N/A Method 2340B: See ICP Metals 200.7	--	N/A
	Ending	130.2 2340B	Method 130.2: N/A Method 2340B: See ICP Metals 200.7	--	N/A
Iron (Ferrous)	Initial	3500-Fe D	3 levels plus a blank, "r" [3] ≥ 0.995	-	N/A
	Continuing	3500-Fe D	One mid-level every 10 samples ± 10% of true value	-	N/A
	Ending	3500-Fe D	One mid-level ± 10% of true value	-	N/A

Analysis	Calibration	NPDES [1]		RCRA (SW846) [2]	
		Method	Requirement	Method	Requirement
Nitrate	Initial	300.0A 353.2 SM4500NO_3-E	5 levels plus a blank "r" [3] ≥ 0.995	9056A	3 levels plus a blank
	Continuing	300.0A 353.2 SM4500NO_3-E	One mid-level every 10 samples ± 10% of true value	9056A	One per batch of 20 samples ± 10% of true value
	Ending	300.0A 353.2 SM4500NO_3-E	One mid-level ± 10% of true value	9056A	N/A
Nitrite	Initial	300.0A 354.1	5 levels plus a blank "r" [3] ≥ 0.995	9056A	3 levels plus a blank
	Continuing	300.0A 354.1	One mid-level every 10 samples ± 10% of true value	9056A	One per batch of 20 samples ± 10% of true value
	Ending	300.0A 354.1	One mid-level ± 10% of true value	9056A	N/A
Nitrate-Nitrite	Initial	300.0A 353.2	5 levels plus blank "r" [3] ≥ 0.995	--	N/A
	Continuing	300.0A 353.2	One level every 10 samples ± 10% of true value	--	N/A
	Ending	300.0A 353.2	One mid-level ± 10% of true value	--	N/A

Analysis	Calibration	NPDES [1]		RCRA (SW846) [2]	
		Method	Requirement	Method	Requirement
Phosphorus (Total and Ortho-phosphate)	Initial	300.0A 365.1 SM4500P-E	Method 300.0A/365.3: 3 levels plus a blank Method 365.2: 5 levels plus a blank	--	N/A
	Continuing	300.0A 365.1 SM4500P-E	Method 300.0A/365.3: One level every 10 samples ± 10% of true value Method 365.2: Blank and 2 standards with each series of samples, ± 2% of true value or recalibrate	--	N/A
	Ending	300.0A 365.1 SM4500P-E	Method 300.0A/365.3: ± 10% of true value Method 365.2: N/A	--	N/A
pH	Initial	150.1 SM4500H-B	2 level calibration that bracket the expected pH of the sample ± 0.05 pH units of true value	9040B 9045C	2 point calibration ± 0.05 pH units of true value
	Continuing	150.1 SM4500H-B	One buffer check every 10 samples ± 5% of true value	9040B 9045C	N/A
	Other	150.1 SM4500H-B	Third point check	9040B 9045C	Third point check
	Ending	150.1 SM4500H-B	One buffer check ± 5% of true value	9040B 9045C	N/A

Analysis	Calibration	NPDES [1]		RCRA (SW846) [2]	
		Method	Requirement	Method	Requirement
Phenolics	Initial	420.1	5 levels plus a blank "r" [3] ≥ 0.995	9065 9066	5 levels plus a blank "r" [3] 0.995
	Continuing	420.1	One mid-level every 10 samples ± 10% true value	9065 9066	One mid-level ± 15% true value
	Ending	420.1	One mid-level ± 10% true value	9065 9066	One mid-level ± 15% true value
Phosphate	Initial	SM4500P-E	N/A	9056	3 levels plus a blank
	Continuing	SM4500P-E	N/A	9056	One per batch of 20 samples ± 15% of true value
	Ending	SM4500P-E	N/A	9056	N/A
Settleable Solids	Initial	160.5	N/A	--	N/A
	Continuing	160.5	N/A	--	N/A
	Ending	160.5	N/A	--	N/A
Specific Conductance	Initial	120.1 SM2510B	Standardize meter with 0.01 M KCl	9050A	N/A
	Continuing	120.1 SM2510B	One level every 10 samples ± 10% of true value	9050A	N/A
	Ending	120.1 SM2510B	One level ± 10% of true value	9050A	N/A
Sulfate	Initial	300.0A 375.4	Method 300.0A: 5 levels plus blank "r" [3] ≥ 0.995 Method 375.4: 3 levels plus blank "r" [3] ≥ 0.995	9038 9056A	Method 9038: 3 levels plus a blank for every hour of continuous sample analysis. Method 9056: 3 levels plus a blank

Analysis	Calibration	NPDES [1]		RCRA (SW846) [2]	
		Method	Requirement	Method	Requirement
Sulfate (Cont'd)	Continuing	300.0A 375.4	Method 300.0A: One mid-level after every 10 samples ± 10% of true value Method 375.4: One level every 3 or 4 samples ± 10% of true value	9038 9056A	Method 9038: Independent-prepared check standard every 15 samples Method 9056: 1 per batch of 20 samples ± 10% of true value
	Ending	300.0A 375.4	± 10% of true value	9038 9056A	N/A
Sulfide	Initial	376.1	Method 376.1: This is a titration method. Therefore, calibrations are not applicable.	9030B/ 9034 9030A	This is a colorimetric titration. Therefore, calibration is not applicable.
	Continuing	376.1	Method 376.1: N/A	9030B/ 9034 9030A	This is a colorimetric titration. Therefore, calibration is not applicable.
	Ending	376.1	Method 376.1: N/A	9030B/ 9034 9030A	This is a colorimetric titration. Therefore, calibration is not applicable.
Total Dissolved Solids	Initial	160.1 SM2540E	This is a gravimetric determination. Calibrate balance prior to analysis	--	N/A
	Continuing	160.1 SM2540E		--	N/A
	Ending	160.1 SM2540E		--	N/A

Analysis	Calibration	NPDES [1]		RCRA (SW846) [2]	
		Method	Requirement	Method	Requirement
Total Kjeldahl Nitrogen (TKN)	Initial	351.3 SM4500NO_3	Method 351.3: Titrimetric: Standardize titrant Colorimetric: 7 levels plus blank	--	N/A
	Continuing	351.3 SM4500NO_3	Method 351.3: N/A	--	N/A
	Ending	351.3 SM4500NO_3	Method 351.3: N/A	--	N/A
Total Organic Carbon (TOC)	Initial	415.1 SM5310D	3 levels plus blank	9060 Walkley Black	3 levels plus blank "r" [3] ≥ 0.995
	Continuing	415.1 SM5310D	1 mid-level every 10 samples ± 15% of true value	9060 Walkley Black	1 mid-level every 10 samples ± 15% of true value
	Ending	415.1 SM5310D	± 15% of true value	9060 Walkley Black	± 15% of true value
Total Organic Halides (TOX)	Initial	450.1	Method 450.1: Daily instrument calibration standard and blank in duplicate ± 10% of true value (calibration standard) Verify with independently-prepared check standard	9020B 9023 (EOX)	Daily instrument calibration standard and blank in duplicate ± 10% of true value (calibration standard) Verify with independently-prepared check standard –ICV ± 10% SOP CORP-WC-0001

Analysis	Calibration	NPDES [1]		RCRA (SW846) [2]	
		Method	Requirement	Method	Requirement
Total Organic Halides (TOX) (cont'd)	Continuing	450.1	± 10% of true value	9020B 9023 (EOX)	CCV ± 10% of true value SOP CORP-WC-0001
	Ending	450.1	± 10% of true value	9020B 9023 (EOX)	CCV ± 10% of true value SOP CORP-WC-0001
Total Solids	Initial	160.3	This is a gravimetric determination. Calibrate balance before use.	--	N/A
	Continuing	160.3		--	N/A
	Ending	160.3		--	N/A
Total Suspended Solids (Nonfilterable)	Initial	160.2 SM2540E	This is a gravimetric determination. Calibrate balance before use.	--	N/A
	Continuing	160.2 SM2540E		--	N/A
	Ending	160.2 SM2540E		--	N/A
Turbidity	Initial	180.1	Minimum of 1 level in each instrument range. Follow manufacturer's instructions	--	N/A
	Continuing	180.1	N/A	--	N/A
	Ending	180.1	N/A	--	N/A
Volatile Solids	Initial	160.4	This is a gravimetric determination. Calibrate balance before use.	--	N/A
	Continuing	160.4		--	N/A
	Ending	160.4		--	N/A

Analysis	Calibration	NPDES [1]		RCRA (SW846) [2]	
		Method	Requirement	Method	Requirement
ICP & ICP/MS Metals (excludes Hg)	Initial	200.7	One level and blank. ICV RSD <3% from replicate	6010B	One level and blank. ICV RSD <5% from replicate
	Initial	200.8	One level and blank	6020	One level and blank
	Continuing	200.7	Every 10 samples ±10% of true value CCV RSD < 5% from replicate	6010B	Mid-level calibration standard Every 10 samples ± 10% of true value CCV RSD < 5% from replicate
	Continuing	200.8	N/A	6020	N/A
	Ending	200.7	±10% of true value CCV RSD < 5% from replicate	6010B	Mid-level calibration standard ± 10% of true value CCV RSD < 5% from replicate
	Ending	200.8	N/A	6020	N/A
	Other	200.7	ICSA, ICSAB: Analyze at beginning of run. For ICSA, AB criteria see SOP Semi-Annually: ICP interelement correction factors Instrument detection limits	6010B	ICSA, ICSAB: Analyze at beginning of run. For ICSA, AB criteria see SOP Semi-Annually: ICP interelement correction factors Instrument detection limits
	Other	200.8	N/A	6020	N/A

Analysis	Calibration	NPDES [1]		RCRA (SW846) [2]	
		Method	Requirement	Method	Requirement
Mercury by CVAA & CVAFS	Initial	245.1 1631E	5 levels plus blank ICV ±10% of true value "r" [3] ≥ 0.995	7470A 7471A	5 levels plus blank ICV ± 10% of true value "r" [3] ≥ 0.995
	Continuing	245.1* 1631E	Daily or every 10 samples, whichever is more frequent ±20% of true value	7470A 7471A	Every 10 samples ±20% of true value
	Ending	245.1 1631E	±20% of true value	7470A 7471A	±20% of original prepared standard
	Other	245.1 1631E	Annually: MDL	7470A 7471A	Annually: MDL

* 245.1 continuing – Initial CCV ±5% of true value

Footnotes

[1] National Pollutant Discharge Elimination System.

[2] Resource Conservation and Recovery Act, Test Methods for Evaluating Solid Waste, Physical/Chemical Methods, (SW-846), Third Edition, September 1986. Contains Final Update I (July 1992), Final Update IIA (August 1993), Final Update II (September 1994), Final Update IIB (January 1995), and Final Update III (December, 1996).

[3] "r" = correlation coefficient.

SUMMARY OF ORGANIC METHOD CALIBRATIONS

Analysis	Calibration	NPDES [1]		RCRA (SW846) [2]	
		Method	Requirement	Method	Requirement
Aromatic Volatiles by GC	Initial	602	Minimum of 3 levels If % RSD < 10%, use avg RF. Otherwise, calibration curve employed. Six levels for quadratic equation.	8021B	Minimum of 5 levels If % RSD < 20%, use avg RF. Otherwise, calibration curve employed. Six levels for quadratic equation.
	Continuing	602	Analyze QC check sample and evaluate per method requirements	8021B	Mid-level calibration standard analyzed every 10 injections or 12 hrs whichever is greater, % D ≤ 15%, gases 20% D. Evaluate per SOP
	Ending	602	Run closer per NELAC requirement, but no criteria	8021B	Mid-level calibration standard, % D ≤ 15%. Evaluate per SOP, except as noted above.
	Other	602	N/A	8021B	N/A
Herbicides by GC	Initial	615 [9]	Minimum of 3 levels If % RSD < 10%, use avg RF. Otherwise, calibration curve employed	8151A	Minimum of 5 levels If % RSD < 20%, use avg RF. Otherwise, calibration curve employed.
	Continuing	615 [9]	One or more calibration standards analyzed daily % D ± 15% of predicted response	8151A	Mid-level calibration standard analyzed every 10 samples. % D < 15% of predicted response for any analyte quantitated and reported.
	Ending	615 [9]	N/A	8151A	Mid-level calibration standard. % D < 15% of predicted response for any analyte quantitated and reported.
	Other	615 [9]	N/A	8151A	N/A

Analysis	Calibration	NPDES [1]		RCRA (SW846) [2]	
		Method	Requirement	Method	Requirement
Pesticides/ PCBs by GC	Initial	608	Minimum of 3 levels If % RSD < 10%, use avg RF. Otherwise, calibration curve employed	8081A 8082	Minimum of 5 levels. If % RSD < 20%, use avg RF. Otherwise, calibration curve employed. (See SOP CORP-GC-0001)
	Continuing	608	One or more calibration standards analyzed daily. % D ± 15% of predicted response	8081A 8082	Mid-level calibration standard analyzed every 10 samples. % D < 15% of predicted response for any analyte quantitated and reported.
	Ending	608	N/A	8081A 8082	Mid-level calibration standard. % D < 15% of predicted response for any analyte quantitated and reported.
	Other	608	N/A	8081A 8082	N/A
Petroleum Hydrocarbons/ Oil and Grease	Initial	1664A	Calibrate analytical balance at 2 mg and 1000 mg Calibration must be ± 10% at 2 mg and ± 0.5% at 1000 mg or recalibrate balance	9071B	Calibrate analytical balance at 2 mg and 1000 mg Calibration must be ± 10% at 2 mg and ± 0.5% at 1000 mg or recalibrate balance
	Continuing	1664A	N/A	9071B	N/A
	Ending	1664A	N/A	9071B	N/A

Analysis	Calibration	NPDES [1]		RCRA (SW846) [2]	
		Method	Requirement	Method	Requirement
Purgeable Halocarbons by GC	Initial	601	Minimum of 3 levels If % RSD < 10%, use avg RF. Otherwise, calibration curve employed. Six levels for quadratic equation.	8021B	Minimum of 5 levels If % RSD < 20%, use avg RF. Otherwise, calibration curve employed. Six levels for quadratic equation.
	Continuing	601	Analyze QC check sample and evaluate per method requirements	8021B	Mid-level calibration standard analyzed every 10 injections, or 12 hrs, whichever is greater. % D < 15%, gases 20% D Evaluate per SOP
	Ending	601	Run per NELAC, but no requirement to meet	8021B	Mid-level calibration standard, % D <15%. Evaluate per SOP
	Other	601	N/A	8021B	N/A
Halogenated Volatiles by GC	Initial	--	N/A	8021B	Minimum of 5 levels If % RSD < 20%, use avg RF. Otherwise, calibration curve employed.
	Continuing	--	N/A	8021B	Mid-level calibration standard analyzed every 10 samples. % D < 15% of predicted response for any analyte quantitated and reported.
	Ending	--	N/A	8021B	Mid-level calibration standard % D < 15% of predicted response for any analyte quantitated and reported.
	Other	--	N/A	8021B	N/A

Analysis	Calibration	NPDES [1]		RCRA (SW846) [2]	
		Method	Requirement	Method	Requirement
Semivolatiles	Initial	625	Minimum of 3 levels, lowest near but above MDL. If % RSD ≤ 35%, use avg RF. Otherwise calibration curve employed.	8270C	Minimum of 5 levels, % RSD for RF for CCCs(4) < 30% SPCCs(5): RF > 0.050
	Continuing	625	One level every 24 ours. Acceptance criteria are found in the method and SOP.	8270C	Mid-level standard every 12 hours (after tuning) %D for CCCs(4) < 20 % between RF from standard and avg RF from initial SPCCs(5): RF > 0.050.
	Ending	625	N/A	8270C	N/A
	Other	625	DFTPP(7) tuning every 24 hours before standard or sample runs.	8270C	DFTPP(7) tuning at the beginning of every 12 hour shift.

Analysis	Calibration	NPDES [1]		RCRA (SW846) [2]	
		Method	Requirement	Method	Requirement
Volatiles	Initial	624	Minimum of 3 levels, lowest near but above MDL. If % RSD ≤ 35%, use avg RF. Otherwise, calibration curve employed.	8260B	Minimum of 5 levels, %RSD for RF for CCCs[4] < 30.0% SPCCs[5]:RF ≥ 0.300 for Chlorobenzene and 1,1,2,2-tetrachloroethane, Chloromethane and 1,1-dichloroethane, and RF > 0.100 for Bromoform
	Continuing	624	1 level every 24 hours Acceptance criteria are found in the method and SOP	8260B	Mid-level standard every 12 hours (after tuning) %Drift for CCCs(4) < 20.0% between RF from standard and avg RF from initial SPCCs(5): RF ≥ 0.300 for Chlorobenzene and 1,1,2,2-tetrachloroethane, Chloromethane and 1,1-dichloroethane, and RF > 0.100 for Bromoform
	Ending	624	N/A	8260B	N/A
	Other	624	BFB(6)tuning at the beginning of every 24 hour shift.	8260B	BFB(6)tuning at the beginning of every 12 hour shift.

Footnotes:

1 National Pollutant Discharge Elimination System.
2 Resource Conservation and Recovery Act, Test Methods for Evaluating Solid Waste, Physical/Chemical Methods, (SW-846), Third Edition, September 1986. Contains Final Update I (July 1992), Final Update IIA (August 1993), Final Update II (September 1994), Final Update IIB (January 1995), and Final Update III (December 1996).
3 TCDD - 2,3,7,8-Tetrachlorodibenzo-p-dioxin.
4 CCC - Continuing Calibration Compounds.
5 SPCC - System Performance Check Compound.
6 BFB – Bromofluorobenzene.
7 DFTPP – Decafluorotriphenylphosphine.
8 Footnote deleted.
9 Method not listed in 40 CFR Part 136.

SECTION 22

MEASUREMENT TRACEABILITY
(NELAC 5.5.6)

22.1 OVERVIEW

Traceability of measurements shall be assured using a system of documentation, calibration, and analysis of reference standards. Laboratory equipment that are peripheral to analysis and whose calibration is not necessarily documented in a test method analysis or by analysis of a reference standard shall be subject to ongoing certifications of accuracy. At a minimum, these must include procedures for checking specifications of ancillary equipment: balances, thermometers, temperature, Deionized (DI) and Reverse Osmosis (RO) water systems, automatic pipettes and other volumetric measuring devices. With the exception of Class A Glassware (including glass microliter syringes that have a certificate of accuracy), quarterly accuracy checks are performed for all mechanical volumetric devices. Microsyringes are verified at least semi-annually or disposed of after six months of use. Wherever possible, subsidiary or peripheral equipment is checked against standard equipment or standards that are traceable to national or international standards. The following definitions are provided by the American Association for Laboratory Accreditation (A2LA):

"Traceability is the property of a measurement result whereby it can be related to stated references, usually national or international standards, through an unbroken chain of comparisons, each step in the chain having stated uncertainties." There are six essential elements:

- An unbroken chain of comparison
- A calculated measurement uncertainty for each step in the chain to allow for an overall uncertainty calculation
- Documentation of each step in each calibration report
- All steps in the chain are performed by individuals with evidence of technical competence and accredited by a recognized accreditation body
- Reference to International Standard (SI) units
- Recalibration at appropriate intervals to preserve traceability

Calibration is defined as "determining and documenting the deviation of the indication of a measuring instrument (or the stated value of a material measure) from the conventional 'true' value of the measurand."

Uncertainty is defined as "a parameter associated with the result of a measurement that characterizes the dispersion of the value that could reasonably be attributed to the measurand." Measurement of Uncertainty is discussed is Section 20 of this QA Manual.

22.2 NIST-TRACEABLE WEIGHTS AND THERMOMETERS

Reference standards of measurement shall be used for calibration only and for no other purpose, unless it can be shown that their performance as reference standards would not be invalidated.

For NIST-traceable weights and thermometers, the laboratory requires that all calibrations be conducted by a calibration laboratory accredited by A2LA, NVLAP (National Voluntary Laboratory Accreditation Program), APLAC (Asia-Pacific Laboratory Accreditation Cooperation), or EA (European Cooperation for Accreditation). A certificate and scope of accreditation is kept on file at the laboratory. Refer to Section 21 for calibration of weights and thermometers.

An external certified service engineer services laboratory balances on an annual basis. This service is documented on each balance with a signed and dated certification sticker. Balance calibrations are checked each day of use. All mercury thermometers are calibrated annually against a traceable reference thermometer. Temperature readings of ovens, refrigerators, and incubators are checked on each day of use.

22.3 REFERENCE STANDARDS / MATERIALS

Reference standards/materials, where commercially available, are traceable to certified reference materials. Commercially prepared standard materials are purchased from vendors accredited by A2LA, NVLAP, with an accompanying Certificate of Analysis that documents the standard purity. If a standard cannot be purchased from a vendor that supplies a Certificate of Analysis, the purity of the standard is documented by analysis. (Refer to Section 9 for additional information on purchasing). The receipt of all reference standards must be documented. Reference standards are labeled with a unique Standard Identification Number and expiration date. All documentation received with the reference standard is retained as a QC record and references the Standard Identification Number.

All reference, primary and working standards/materials, whether commercially purchased or laboratory prepared, must be checked regularly to ensure that the variability of the standard or material from the 'true' value does not exceed method requirements. The accuracy of calibration standards is checked by comparison with a standard from a second source. In cases where a second standard manufacturer is not available, a vendor certified different lot is acceptable for use as a second source. For unique situations, where no other source or lot is available, a standard made by a different analyst would be considered a second source. The appropriate Quality Control (QC) criteria for specific standards are defined in laboratory SOPs. In most cases, the analysis of an Initial Calibration Verification (ICV) or LCS (where there is no sample preparation) is used as the second source confirmation. These checks are generally performed as an integral part of the analysis method (e.g. calibration checks, laboratory control samples).

All standards and materials must be stored and handled according to method or manufacturer's requirements in order to prevent contamination or deterioration. Refer to Table 9-1 in Section 9 for general storage requirements and Table 22-1 for additional storage information. Please refer to SOP NC-QA-0017, Standards and Reagents, for additional details. For safety requirements, please refer to method SOPs and the laboratory Environmental Health and Safety Manual.

22.4 DOCUMENTATION AND LABELING OF STANDARDS, REAGENTS, AND REFERENCE MATERIALS

Reagents must be at a minimum the purity required in the test method. The date of reagent receipt and the expiration date are documented. The lots for most of the common solvents and acids are tested for acceptability prior to company wide purchase. Refer to SOP CA-Q-S-001, Solvent and Acid Lot Testing and Approval.

All manufacturer or vendor supplied Certificate of Analysis or Purity must be retained, stored appropriately, and readily available for use and inspection. These records are maintained in each group. Records must be kept of the date of receipt and date of expiration of standards, reagents and reference materials. In addition, records of preparation of laboratory standards, reagents, and reference materials must be retained, stored appropriately, and be readily available for use and inspection.

Commercial materials purchased for preparation of calibration solutions, spike solutions, etc., are usually accompanied with an assay certificate or the purity is noted on the label. If the assay purity is 96% or better, the weight provided by the vendor may be used without correction. If the assay purity is less than 96% a correction will be made to concentrations applied to solutions prepared from the stock commercial material.

22.4.1 All standards, reagents, and reference materials must be labeled in an unambiguous manner. Standards are logged into standard or reagent logbooks, and are assigned a unique identification number. The following information is typically recorded in the Standards Logbook.

- Standard ID
- Description of Standard
- Department
- Preparer's name
- Final volume and number of vials prepared
- Solvent type and lot number
- Preparation date
- Expiration date
- Standard source type (stock or daughter)
- Standard type (spike, surrogate, other)
- Parent standard ID (if applicable)
- Parent standard analyte concentration (if applicable)
- Parent standard amount used (if applicable)
- Component analytes
- Final concentration of each analyte
- Comment box (text field)

Records are maintained in each group for standard and reference material preparation. These records show the traceability to purchased stocks or neat compounds. These records also include method of preparation, date of preparation, expiration date and preparer's name or initials. Preparation procedures are provided in the Method SOPs.

22.4.2 All standards, reagents, and reference materials must be clearly labeled with a minimum of the following information:

- Expiration date
- Standard ID (from the Standards Logbook)
- Special health/safety warnings if applicable

22.4.3 In addition, the following information may be helpful:

- Date of receipt for commercially purchased items or date of preparation for laboratory prepared items
- Date opened (for multi-use containers, if applicable)
- Description of standard (if different from manufacturer's label or if standard was prepared in the laboratory)
- Concentration (if applicable)
- Initials of analyst preparing standard or opening container

All containers of prepared reagents must include a preparation date, expiration date and an ID number to trace back to preparation.

Procedures for preparation of reagents can be found in the Method SOPs.

Standard ID numbers must be traceable through associated logbooks, worksheets and raw data.

All reagents and standards must be stored in accordance to the following priority:

1) With the manufacturer's recommendations
2) With requirements in the specific analytical methods
3) According to Table 22-1

SECTION 23.0

SAMPLING
(NELAC 5.5.7)

23.1 OVERVIEW

TestAmerica North Canton provides sampling services. Sampling procedures are described in SOP NC-SC-0006, Sample Procurement Protocol.

23.2 SAMPLING CONTAINERS

The laboratory offers clean sampling containers for use by clients. These containers are obtained from reputable container manufacturers and meet EPA specifications as required. Any certificates of cleanliness that are provided by the supplier are available from the vendor electronically, or stored at the laboratory.

23.2.1 Preservatives

Upon request, preservatives are provided to the client in pre-cleaned sampling containers. In some cases containers may be purchased pre-preserved from the container supplier. Whether prepared by the laboratory or bought pre-preserved, the grades of the preservatives are at a minimum:

- Hydrochloric Acid – Reagent ACS (Certified VOA Free) or equivalent
- Methanol – Purge and Trap grade
- Nitric Acid – Instra-Analyzed or equivalent
- Sodium Bisulfate – ACS Grade or equivalent
- Sodium Hydroxide – Instra-Analyzed or equivalent
- Sulfuric Acid – Instra-Analyzed or equivalent
- Sodium Thiosulfate – ACS Grade or equivalent

23.2.2 Preparing Container Orders

Container orders are prepared using the laboratory Shipping Department, SOP NC-QA-0012. The laboratory also provides EnCore, TerraCore or other soil sampling devices when requested.

If containers are provided directly to the client from the manufacturer or from other sources, the laboratory will not be responsible for any of the above records.

23.3 FIELD QUALITY CONTROL (QC)

Common field quality control samples are defined in the following paragraphs. The frequency of field quality control samples should be specified in the site specific Quality Assurance Project Plan (QAPP) or by the client. TestAmerica provides trip blanks for VOC analysis with the sample

containers for all volatile organic analyses. Blanks generated in the field will be analyzed along with the field samples (exception soil samples where the blank is aqueous).

23.3.1 Equipment Blank / Rinsate Blank - The equipment blank, sometimes referred to as a rinsate blank, is a sample of the water used to decontaminate sampling equipment. The source water should be as free of target analytes as possible. An aliquot of this water is poured over or through the sample collection device after decontamination, collected in a sample container, preserved with appropriate reagents, and returned to the laboratory. This serves as a check on sampling device cleanliness, and will also be affected by the site and sample handling conditions evaluated by the other types of blanks. The sampling time for the equipment blank should begin when the equipment is rinsed and the water is collected. Equipment blank collection for low level mercury is generally done at a clean facility rather than at the sample collection site.

23.3.2 Field Blank - The field blank is water that is as free of target analytes as possible and from the same source as the equipment blank. The water is poured into a sampling container at the sampling site, preserved with the appropriate reagents, and returned to the laboratory. This serves as a check on reagent and environmental contamination. The sampling time for the field blank should be when the blank is prepared in the field.

23.3.3 Trip Blank - The trip blank pertains to volatile analysis only. This serves as a check on sample contamination originating from sample transport, sample container contamination, shipping and storage, or from certain site conditions. Trip blanks are often referred to as travel blanks. They are prepared using pre-cleaned sample containers. They are filled with organic-free water (the source of the organic free water is the same source of water used to prepare volatile standards, method blanks, LCS and sample dilutions), sealed and taken into the field with the empty containers which will be used for sampling. The recommended frequency is one trip blank per cooler (in duplicate or triplicate), per volatiles method. Unless otherwise specified, the sampling time for the trip blank is the time of receipt at the laboratory (When the “Trip” ends).

23.3.4 Field Duplicates - Field duplicates are replicate samples collected from the same sampling point or location during a field collection event. This control sample is used to demonstrate the ability of both the sampling and analytical process to generate data of acceptable precision.

23.4 DEFINITION OF HOLDING TIME

The date and time of sampling documented on the chain-of-custody (COC) form establishes the day and time zero. As a general rule, when the maximum allowable holding time is expressed in “days” (e.g. 14 days, 28 days), the holding time is based on calendar day measured. Holding times expressed in “hours” (e.g. 6 hours, 24 hours, etc.) are measured from date and time zero. The first day of holding time ends twenty-four hours after sampling. Holding times for analysis include any necessary reanalysis. However there are some programs that determine holding time compliance based on the date and specific time of analysis compared to the time of sampling regardless of how long the holding time is.

23.4.1 Semi-Volatile - Holding times for sample preparation for semi-volatile organics are measured from the sampling date (and time where applicable) until the day (and time where applicable) solvent contacts the sample. If a sample is to be extracted on the day of expiration, the actual time of extraction must be recorded on the sample preparation worksheet. Holding

times for analysis are measured from the date (and time where applicable) of initiation of extraction to the time of injection into the gas chromatograph.

23.4.2 Volatiles - Holding times for volatile organics are measured from the date (and time where applicable) of sampling to the date and time of injection into the gas chromatograph.

23.4.3 Inorganics - For inorganic and metals analysis, the preparation/digestion/distillation must be started within the maximum holding time as measured from the sampling date (and time where applicable).

23.5 SAMPLING CONTAINERS, PRESERVATION REQUIREMENTS, HOLDING TIMES

The preservation and holding time criteria specified in the following tables are derived from the source documents for the methods. If method required holding times (refer to Tables 23-1 to 23-7) or preservation requirements are not met, the reports will be qualified using a flag, footnote or case narrative. As soon as possible or "ASAP" is an EPA designation for tests for which rapid analysis is advised, but for which neither EPA nor the laboratory have a basis for a holding time.

23.6 SAMPLE ALIQUOTS / SUBSAMPLING

Taking a representative sub-sample from a container is necessary to ensure that the analytical results are representative of the sample collected in the field. The size of the sample container, the quantity of sample fitted within the container, and the homogeneity of the sample need consideration when sub-sampling for sample preparation. It is the laboratory's responsibility to take a representative subsample or aliquot of the sample provided for analysis. In that regard the following guidelines apply to analysts:

Analysts must handle each sample as if it is potentially dangerous. At a minimum, safety glasses, gloves, and lab coats must be worn when preparing aliquots for analysis.

23.6.1 For water samples, before taking each aliquot for analysis, invert the sample container end-over-end three times and immediately pour off the aliquot. Especially when suspended solids are present, adequate mixing of the sample is extremely important.

23.6.2 For solid samples, when volatile organics are not requested, if the solid can be mixed, stir before removing the aliquot. When possible stir the entire sample in the sample container. Remove small increments of sample from different parts of the container to make up the complete subsample.

- For soil samples, avoid debris in the subsample aliquot as much as possible (e.g. gravel, sticks, roots and grass); note this information in the sample preparation record.

23.6.3 For solid samples, when volatile organics analysis is requested, the sample should be manipulated as little as possible. In most cases, the sample will arrive already preserved or in an EnCore™ sampler of the correct mass (requiring quick preservation of the entire amount). If the client requests volatiles on a solid sample which has been collected in a jar and is in a common container from which aliquots for other test methods must be taken, login should deliver the container to the volatiles department for preparing a proper aliquot prior to any other aliquots being taken out.

23.6.4 For multiphasic samples, the client should instruct the laboratory as to the intent of the testing and how to handle the sample. If the entire sample is to be accounted for, and the phases do not mix easily with inversion/stirring, such that a representative aliquot can be taken, the analyst must record the percent by volume of each phase. The analysis must be conducted on each phase separately; the final results are combined mathematically, weighting the individual phase results by volume. One exception to this procedure is the situation addressed in the TCLP and SPLP methods for wastes containing free liquids. However, if the leachate and final filtrate are not miscible, it is necessary to combine mathematically the concentrations of the two (or more) solutions by volume. A laboratory coliwasa can be used to subsample a multilayer liquid sample when appropriate.

Tables 23-1 to 23-7 detail holding times, preservation and container requirements, and sample volumes for SDWA and NPDES methods. The sample volumes are intended to be a minimal amount to perform the method. The containers used may be of larger size. **Please note**: The holding times are program specific and different programs may have different holding times for equivalent methods, e.g., there are differences in holding times for many organic analytes between SDWA and NPDES. RCRA methods may also be different.

Table 23-1.

Inorganic Sample Containers, Preservatives, and Holding Times

Analytical Parameters	Matrix	Minimum Sample Size [1]	NPDES [2, 3, 7]		RCRA (SW846) [3, 4]	
			Method	Requirements	Method	Requirements
Acidity	Water	100 mL	305.1 SM2310B	250 mL plastic or glass. Cool to 4°C, 14 days	---	N/A
Alkalinity, Bicarbonate, Carbonate	Water	100 mL	310.1 2320B	250 mL plastic or glass. Cool to 4°C, 14 days	---	N/A
	Solid	N/A	---	N/A	---	N/A
	Waste	N/A	---	N/A	---	N/A
Ammonia	Water	100 mL	350.1 350.2 SM4500NH_3-E SM4500NH_3-F	500 mL plastic or glass. Cool to 4°CH_2SO_4 to pH < 2, 28 days	---	N/A
	Solid	N/A	---	N/A	---	N/A
	Waste	N/A	---	N/A	---	N/A
Arsenic (ASV) Anodic Stripping Voltammetry	Water	100 mL	---	N/A	7063	250 mL plastic. Cool to 4°C. HCl to pH <2, 28 days
Biochemical Oxygen Demand (BOD), Carbonaceous	Water	1000 mL	405.1 5210B	1000 mL plastic or glass. Cool to 4°C, 48 hours	---	N/A
	Solid	N/A	---	N/A	---	N/A
	Waste	N/A	---	N/A	---	N/A
Bromide	Water	50 mL	300.0A[7]	250 mL plastic or glass. No preservative required, 28 days	9056A	Cool to 4°C. Analyze ASAP after collection
	Solid	N/A	---	N/A	---	N/A
	Waste	N/A	---	N/A	---	N/A
Cation Exchange	Solid	8 oz	---	N/A	9081	8 or 16 oz glass. Cool to 4°C, 6 months
Chemical Oxygen Demand (COD)	Water	100 mL	410.4 5220D	250 mL glass or plastic. Cool to 4°C, H_2SO_4 to pH < 2, 28 days	---	N/A
	Solid	N/A	---	N/A	---	N/A
	Waste	N/A	---	N/A	---	N/A

Analytical Parameters	Matrix	Minimum Sample Size [1]	NPDES [2, 3, 7]		RCRA (SW846) [3, 4]	
			Method	Requirements	Method	Requirements
Chloride	Water	50 mL	300.0A [7] 325.2	250 mL plastic or glass. No preservative required, 28 days	9056A 9251	Method 9056: Cool to 4°C. Analyze ASAP after collection. Method 9251: 250ml plastic or glass, no preservative required, 28 days
	Solid	N/A	---	N/A	---	N/A
	Waste	N/A	---	N/A	---	N/A
Chlorine, Residual	Water	100 mL	330.5	250 mL glass or plastic. Cool to 4°C, analyze immediately	---	N/A
	Solid	N/A	---	N/A	---	N/A
	Waste	N/A	---	N/A	---	N/A
Chromium (Cr^{+6})	Water	100 mL	3500 Cr-D	Method 218.4: 200 mL plastic or glass. Cool to 4°C, 24 hours. Method 3500 Cr-D: 200 mL quartz, TFE, or polypropylene HNO_3 to pH <2. Cool to 4°C. Analyze ASAP after collection	7196A	200 mL plastic or glass. Cool to 4°C, 24 hours
	Solid	20 g	---	N/A	7196A 3060A	250 mL plastic or glass, 30 days to digestion, 96 hours after digestion
	Waste	N/A	---	N/A	---	N/A
Conductivity	Water	100 mL	120.1 2510B	200 mL glass or plastic. Cool to 4°C, 28 days	9050A	200 mL glass or plastic. Cool to 4°C, 24 hours
	Solid	N/A	---	N/A	---	N/A
	Waste	N/A	---	N/A	---	N/A

Analytical Parameters	Matrix	Minimum Sample Size [1]	NPDES [2, 3, 7]		RCRA (SW846) [3, 4]	
			Method	Requirements	Method	Requirements
Cyanide (Amenable)	Water	250 mL	335.1 SM4500CN-G	1 liter plastic or glass, NaOH to pH >12 0.6g ascorbic acid[6]. Cool to 4°C, 14 days unless sulfide is present. Then maximum holding time is 24 hours.	9012A	1 liter plastic or glass, NaOH to pH >12 0.6g ascorbic acid[6]. Cool to 4°C, 14 days
	Solid	50g	---	N/A	9012A	Not Specified
	Waste	50g	---	N/A	9012A	Not Specified
Cyanide (Total)	Water	1L	335.2 335.3 335.4 [(7)] SM4500CN-E	1 liter plastic or glass, NaOH to pH >12 0.6g ascorbic acid[6]. Cool to 4°C, 14 days unless sulfide is present. Then maximum holding time is 24 hours.	9012A	1 liter plastic or glass, NaOH to pH >12 0.6g ascorbic acid[6]. Cool to 4°C, 14 days.
	Solid	50g	--	N/A	9012A	8 or 16 oz glass Teflon-lined lids, Cool to 4°C, 14 days
	Waste	50g	--	N/A	9012A	8 or 16 oz glass Teflon-lined lids, Cool to 4°C
Flashpoint (Ignitability)	Liquid	100 mL	---	N/A	1010 ASTM D93-9	No requirements, 250 mL amber glass. Cool to 4°C recommended
	Solid	100 g	--	N/A	---	N/A
	Waste	100 mL	--	N/A	---	N/A
Fluoride	Water	300 mL	300.0 [7] 340.2	500 mL plastic. No preservation required, 28 days.	9056A	Cool to 4°C. Analyze ASAP after collection.
	Solid	N/A	---	N/A	---	N/A
	Waste	N/A	---	N/A	---	N/A

Analytical Parameters	Matrix	Minimum Sample Size [1]	NPDES [2, 3, 7]		RCRA (SW846) [3, 4]	
			Method	Requirements	Method	Requirements
Hardness (Total)	Water	50 mL	130.2 2340B	250 mL glass or plastic, HNO_3 to pH < 2, 6 months	---	N/A
	Solid	N/A	---	N/A	---	N/A
	Waste	N/A	---	N/A	---	N/A
Iron (Ferrous)	Water	100 mL	3500-Fe D	1 liter glass or polyethylene container, 6 months. **This test should be performed in the field.**	-	N/A
	Solid	N/A	-	N/A	-	N/A
	Waste	N/A	-	N/A	-	N/A
Nitrate	Water	50 mL	300.0A [7] SM4500NO_3-E	Method 300.0: 250 mL plastic or glass. Cool to 4°C, 48 hours.	9056A	Method 9056: Cool to 4°C. Analyze ASAP after collection
	Solid	N/A	---	N/A	---	N/A
	Waste	N/A	---	N/A	---	Not Specified
Nitrite	Water	50 mL	300.0A [7] 354.1	250 mL plastic or glass. Cool, 4°C, 48 hours	9056A	Cool, 4°C. Analyze ASAP after collection
	Solid	N/A	---	N/A	---	N/A
	Waste	N/A	---	N/A	---	N/A
Nitrate-Nitrite	Water	50 mL	353.2	250 mL plastic or glass, H_2SO_4 to pH < 2, 28 days	---	N/A
	Solid	N/A	---	N/A	---	N/A
	Waste	N/A	---	N/A	---	N/A
Ortho-phosphate	Water	50 mL	300.0A [7] 365.1 SM4500P-E	100 mL plastic or glass. Filter on site. Cool to 4°C, 48 hours	9056A	Cool to 4°C. Analyze ASAP collection
	Solid	N/A	---	N/A	---	N/A
	Waste	N/A	---	N/A	---	N/A

Analytical Parameters	Matrix	Minimum Sample Size [1]	NPDES [2, 3, 7]		RCRA (SW846) [3, 4]	
			Method	Requirements	Method	Requirements
pH	Water	50 mL	150.1 SM4500H-B	100 mL plastic or glass. Analyze immediately. **This test should be performed in the field.**	9040B	100 mL plastic or glass. Analyze immediately. **This test should be performed in the field.**[(8)]
	Solid	N/A	---	N/A	9045C	4 oz glass or plastic. Cool to 4°C. Analyze as soon as possible.[8]
	Waste	N/A	---	N/A	9045C	4 oz glass or plastic, Cool to 4°C. Analyze as soon as possible.[8]
Phenolics	Water	100 mL	420.1	500 mL glass, Cool to 4°C, H_2SO_4 to pH < 2, 28 days	9065	1 liter glass recommended, Cool to 4°C, H_2SO_4 to pH < 4, 28 days
	Solid	N/A	---	N/A	---	N/A
	Waste	N/A	---	N/A	9065	Not Specified
Phosphate	Water	50 mL	---	N/A	9056A	Cool to 4°C, analyze ASAP collection
	Solid	N/A	---	N/A	9056A	N/A
	Waste	N/A	---	N/A	9056A	N/A

Analytical Parameters	Matrix	Minimum Sample Size [1]	NPDES [2, 3, 7]		RCRA (SW846) [3, 4]	
			Method	Requirements	Method	Requirements
Phosphorus (Total)	Water	100 mL	365.2 365.1 SM4500P-E	100 mL plastic or glass, H_2SO_4 to pH < 2, 28 days	---	N/A
	Solid	N/A	---	N/A	---	N/A
	Waste	N/A	---	N/A	---	N/A
Settleable Solids	Water	1000 mL	160.5	1000 mL plastic or glass. Cool to 4°C, 48 hours	---	N/A
	Solid	N/A	---	N/A	---	N/A
	Waste	N/A	---	N/A	---	N/A
Specific Conductance	Water	50 mL	120.1 2510B	250 mL plastic or glass. Cool to 4°C, 24 hours	9050A	250 mL plastic or glass. Cool to 4°C, 28 days
	Solid	N/A	---	N/A	---	N/A
	Waste	N/A	---	N/A	---	N/A
Sulfate (SO_4)	Water	50 mL	300.0A [7] 375.4	100 mL plastic or glass. Cool to 4°C, 28 days	9056A 9038	Method 9056: Cool to 4°C. Analyze ASAP collection. Method 9038: 200 mL plastic or glass, Cool to 4°C, 28 days
	Solid	N/A	---	N/A	---	N/A
	Waste	100 mL	---	N/A	9038	200 mL plastic or glass. Cool to 4°C, 28 days

Analytical Parameters	Matrix	Minimum Sample Size [1]	NPDES [2, 3, 7] Method	NPDES [2, 3, 7] Requirements	RCRA (SW846) [3, 4] Method	RCRA (SW846) [3, 4] Requirements
Sulfide	Water	250 mL	376.1	500 mL plastic or glass. Cool to 4°C, Add 2 mL zinc acetate plus NaOH to pH > 9, 7 days	9030A 9030B/ 9034	500 mL plastic, No headspace. Cool to 4°C. Add 4 drops of 2N zinc acetate per 100 mL of sample, adjust the pH to > 9 with 6 N NaOH solution, 7 days
	Solid	50 g	---	N/A	9030A 9030B/ 9034	Cool to 4°C. Fill surface of solid with 2N Zinc acetate until moistened. Store headspace-free
	Waste	50 g	---	N/A	9030A 9030B/ 9034	Cool to 4°C. Fill surface of solid with 2N Zinc acetate until moistened. Store headspace-free
Total Dissolved Solids (Filterable)	Water	100 mL	160.1 2540C	250 mL plastic or glass. Cool to 4°C, 7 days	---	N/A
	Solid	N/A	---	N/A	---	N/A
	Waste	N/A	---	N/A	---	N/A

Analytical Parameters	Matrix	Minimum Sample Size [1]	NPDES [2, 3, 7]		RCRA (SW846) [3, 4]	
			Method	Requirements	Method	Requirements
Total Kjeldahl Nitrogen (TKN)	Water	100 mL	351.3	500 mL plastic or glass. Cool to 4°C, H_2SO_4 to pH < 2, 28 days	---	N/A
	Solid	N/A	---	N/A	---	N/A
	Waste	N/A	---	N/A	---	N/A
Total Organic Carbon (TOC)	Water	100 mL	415.1 SM5310D	100 mL plastic or glass. Cool to 4°C, H_2SO_4 to pH < 2, 28 days	9060 Walkley-Black	100 mL glass or 40 mL VOA vials,Cool to 4°C, H_2SO_4 or HCl to pH < 2, 28 days
	Solid	N/A	---	N/A	9060 Walkley-Black	Not Specified
	Waste	N/A	---	N/A	9060 Walkley-Black	Not Specified
Total Organic Halides (TOX) (EOX)	Water	100 mL	450.1 [7]	500 mL amber glass, Teflon®-lined lid. Cool to 4°C, HNO_3 to pH <2, no headspace, 28 days	9020B 9023 (EOX)	500 mL amber glass, Teflon®-lined lid. Cool to 4°C, H_2SO_4 to pH < 2, no headspace, 28 days
	Solid	N/A	---	N/A	---	N/A
	Waste	N/A	---	N/A	---	N/A
Total Solids	Water	100 mL	160.3	250 mL plastic or glass. Cool to 4°C, 7 days	---	N/A
	Solid	N/A	---	N/A	---	N/A
	Waste	N/A	---	N/A	---	N/A
Total Suspended Solids (Nonfilterable)	Water	100 mL	160.2	250 mL plastic or glass. Cool, 4°C, 7 days	---	N/A
	Solid	N/A	---	N/A	---	N/A
	Waste	N/A	---	N/A	---	N/A

Analytical Parameters	Matrix	Minimum Sample Size [1]	NPDES [2, 3, 7]		RCRA (SW846) [3, 4]	
			Method	Requirements	Method	Requirements
Turbidity	Water	50 mL	180.1	250 mL plastic or glass. Cool, 4°C, 48 hours	---	N/A
	Solid	N/A	---	N/A	---	N/A
	Waste	N/A	---	N/A	---	N/A
Volatile Solids	Water	100 mL	160.4	250 mL plastic or glass. Cool, 4°C, 7 days	---	N/A
	Solid	N/A	---	N/A	---	N/A
	Waste	N/A	---	N/A	---	N/A
Metals (excludes Hg)	Water	100 mL	200 series	1 liter glass or polyethylene container, HNO_3 to pH $\leq$ 2, 6 months	6010B 6020	1 liter glass or polyethylene container, HNO_3 to pH $\leq$ 2, 6 months
	Solid	200 g	200 series	2, 8, or 16 oz glass or polyethylene container storage at 4 °C	6010B 6020	8 or 16 oz glass or polyethylene container, storage at 4°C, 6 months
	Waste	200 g	200 series	N/A	6010B 6020	8 or 16 oz glass or polyethylene container, storage at 4°C, 6 months
Mercury (CVAA) (CVAFS)	Water	100 mL	245.1 245.7 1631E	250 mL glass or polyethylene container, HNO_3 to pH $\leq$ 2, 28 days	7470A	1 liter glass or polyethylene container, HNO_3 to pH $\leq$ 2, 28 days
	Solid	200 g	--	2, 8, or 16 oz glass or polyethylene container. Cool to 4°C, 28 days. Not applicable for Method 1631E.	7471A	8 or 16 oz glass or polyethylene container. Cool to 4°C, 28 days (CORP-MT-0007)
	Waste	200 g	--	N/A	7471A	8 or 16 oz glass or polyethylene container. Cool, 4°C, 28 days (CORP-MT-0007)

Footnotes

[1] Minimum sample size indicates sample amount needed for a single analysis. Matrix spikes or duplicates will require an additional sample amount of at least this amount for each additional QC sample aliquot required.

[2] National Pollutant Discharge Elimination System - MCAWW, March 1983.

[3] Holding times are calculated from date of collection.

[4] Resource Conservation and Recovery Act, Test Methods for Evaluating Solid Waste, Physical/Chemical Methods, (SW-846), Third Edition, September 1986. Contains Final Update I (July 1992), Final Update IIA, (August 1993), Final Update II (September 1994), Final Update IIB (January 1995), and Final Update III (December 1996).

[5] Solid matrix type includes soil, sediment, sludge and other solid materials not classified as waste.

[6] Samples to be analyzed for cyanide should be field-tested for residual chlorine. If residual chlorine is detected, ascorbic acid should be added.

[7] Method not listed in 40 CFR Part 136.

[8] If not done in the field (ASAP) per the method and requested by client, analyze in lab within 48 hours.

[9] EPA issued memo recommending not to use reactive cyanide and sulfide methods.

Company Confidential & Proprietary

Table 23-2.

Organic Sample Containers, Preservatives, and Holding Times

Analytical Parameters	Matrix	Minimum Sample Size [1]	NPDES [2, 3]		RCRA (SW846) [3, 4]	
			Method	Requirements	Method [6]	Requirements
Aromatic Volatiles	Water	40 mL	602	40 mL glass, VOA vial (in triplicate) with Teflon®-lined septa without headspace. Cool to 4°C, 7 days with pH > 2,14 days with pH ≤ 2	8021B	40 mL glass, VOA vial (in triplicate) with Teflon®-lined septa without headspace. Cool to 4°C, 1:1 HCl to pH ≤2, 14 days with pH ≤ 2
	Solid [5]	5 g or 25 g	--	N/A	8021B	4 or 8 oz glass with Teflon®-lined lid. Cool to 4 °C, 14 days. Field preserved with methanol for medium level analysis. Soil sample can also be taken by using the EnCore™ sampler and preserved in the lab within 48 hours of sampling. Maximum holding time for Encore Sampler is 48 hours (before the sample is added to methanol). Cool, 4°C [12]
	Waste	5 g or 25 g	--	N/A	8021B	4 or 8 oz glass with Teflon®-lined lid. Cool to 4 °C, 14 days. Field preserved with methanol for medium level analysis. Soil sample can also be taken by using the EnCore™ sampler and preserved in the lab within 48 hrs of sampling. Max holding time for EnCore™ sampler is 48 hrs (before the sample is added to methanol). Cool to 4°C [12]

Analytical Parameters	Matrix	Minimum Sample Size [1]	NPDES [2, 3]		RCRA (SW846) [3, 4]	
			Method	Requirements	Method [6]	Requirements
Halogenated Volatiles by GC	Water	40 mL	--	N/A	8021B	40 mL glass, VOA vial (in triplicate) with Teflon®-lined septa without headspace. Cool to 4°C, 1:1 HCl to pH ≤ 2, 14 days
	Solid [5]	5 g or 25 g	--		8021B	4 or 8 oz glass with Teflon®-lined lid. Cool to 4 °C, 14 days. Field preserved with methanol for medium level analysis. Soil sample can also be taken by using the EnCore™ sampler and preserved in the lab within 48 hours of sampling. Maximum holding time for Encore Sampler is 48 hours (before the sample is added to methanol). Cool to 4°C [12]
	Waste	5 g or 25 g	--	N/A	8021B	4 or 8 oz glass with Teflon®-lined lid. Cool to 4 °C, 14 days. Field preserved with methanol for medium level analysis. Soil sample can also be taken by using the EnCore™ sampler and preserved in the lab within 48 hours of sampling. Maximum holding time for Encore Sampler is 48 hours (before the sample is added to methanol). Cool, 4°C [12].

Analytical Parameters	Matrix	Minimum Sample Size [1]	NPDES [2, 3]		RCRA (SW846) [3, 4]	
			Method	Requirements	Method [6]	Requirements
Herbicides	Water	1L	615 [(10)]	1 liter amber glass with Teflon®-lined lid, Sodium thiosulfate or ascorbic acid if residual chlorine present. Cool to 4°C, Extraction, 7 days. Analysis, 40 days after extraction	8151A	1 liter amber glass with Teflon®-lined lid. If residual chlorine present, add 3 mL sodium thiosulfate per gallon. Cool to 4°C. Extraction, 7 days. Analysis, 40 days of the start of extraction.
	Solid	50 g	--	N/A	8151A	4 or 8 oz glass widemouth with Teflon®-lined lid. Cool to 4 °C. Extraction, 14 days. Analysis, 40 days of the start of the extraction.
	Waste	50 g	--	N/A	8151A	4 or 8 oz glass widemouth with Teflon®-lined lid. Cool to 4 °C. Extraction, 14 days. Analysis, 40 days of the start of the extraction.

Analytical Parameters	Matrix	Minimum Sample Size [1]	NPDES [2, 3]		RCRA (SW846) [3, 4]	
			Method	Requirements	Method [6]	Requirements
Pesticides/ PCBs	Water	1L	608	1 liter amber glass with Teflon®-lined lid, Adjust pH to 5-9 if extraction not to be done within 72 hours of sampling. Add sodium thiosulfate if residual chlorine present and aldrin is being determined. Cool, 4°C. Extraction, 7 days. Analysis, 40 days after extraction.	8081A 8082	1 liter amber glass with Teflon®-lined lid, If residual chlorine present, add 3 mL 10% sodium thiosulfate per gallon. Cool, 4°C. Extraction, 7 days. Analysis, 40 days of the start of the extraction.
	Solid	50 g	---	N/A	8081A 8082	4 or 8 oz glass wide mouth with Teflon®-lined lid. Cool, 4°C. Extraction, 14 days. Analysis, 40 days of the start of the extraction.
	Waste	50 g	---	N/A	8081A 8082	4 or 8 oz glass wide mouth with Teflon®-lined lid. Cool, 4°C. Extraction, 14 days. Analysis, 40 days of the start of the extraction.

Analytical Parameters	Matrix	Minimum Sample Size [1]	NPDES [2, 3]		RCRA (SW846) [3, 4]	
			Method	Requirements	Method [6]	Requirements
Petroleum Hydrocarbons /Oil and Grease	Water	1 L	1664A[(7)]	1 liter glass, Cool, 4°C HCl or H_2SO_4 to pH <2 28 days	9071B	1 liter glass, Cool, 0-4°C HCl or H_2SO_4 to pH <2 28 days
	Solid	30 g	1664A[(7)]	8 or 16 oz. Wide mouth glass jar, Cool, 4°C, 28 days	9071B	8 or 16 oz. wide mouth glass jar, Cool, 0-4°C, 28 days
	Waste	---	---	N/A	9071B	N/A
Purgeable Halocarbons by GC	Water	40 mL	601	40 mL glass VOA vial (in triplicate) with Teflon®-lined septa with no headspace, Cool, 4°C, 14 days.	8021B	40 mL glass VOA vial (in triplicate) with Teflon®-lined septa with no headspace, Cool, 4°C, 1:1 HCl to pH ≤ 2, 14 days.
	Solid	5 g or 25 g	---	N/A	8021B	4 or 8 oz glass with Teflon®-lined lid, Cool 4 °C, 14 days. Field preserved with methanol for medium level analysis. Soil sample can also be taken by using the EnCore™ sampler and preserved in the lab within 48 hours of sampling. Maximum holding time for EnCore™ sampler is 48 hrs (before the sample is added to methanol). Cool, 4°C[12].

Analytical Parameters	Matrix	Minimum Sample Size [1]	NPDES [2, 3]		RCRA (SW846) [3, 4]	
			Method	Requirements	Method [6]	Requirements
Purgeable Halocarbons by GC (cont'd)	Waste	5 g or 25 g	---	N/A	8021B	4 or 8 oz glass with Teflon®-lined lid, Cool 4 °C, 14 days. Field preserved with methanol for medium level analysis. Soil sample can also be taken by using the EnCore™ sampler and preserved in the lab within 48 hours of sampling. Maximum holding time for Encore™ sampler is 48 hours (before the sample is added to methanol). Cool, 4°C[12]
Semivolatiles	Water	1L	625	1 liter amber glass with Teflon®-lined lid. Cool, 4°C. Extraction, 7 days. Analysis, 40 days.	8270C	1 liter amber glass with Teflon®-lined lid, If residual chlorine present, add 3 mL sodium thiosulfate per gallon. Cool, 4°C. Extraction, 7 days. Analysis, within 40 days of extraction.
	Solid	50 g	---	N/A	8270C	8 or 16 oz glass wide mouth with Teflon-lined lid. Cool, 4°C. Extraction, 14 days. Analysis, within 40 days of extraction.
	Waste	50 g	---	N/A	8270C	8 or 16 oz glass wide mouth with Teflon®-lined lid. Cool, 4°C. Extraction, 14 days. Analysis, within 40 days of extraction.

Analytical Parameters	Matrix	Minimum Sample Size [1]	NPDES [2, 3]		RCRA (SW846) [3, 4]	
			Method	Requirements	Method [6]	Requirements
Volatile Organics	Water	40 mL	624	40 mL glass, VOA vial (in triplicate) with Teflon®-lined septa without headspace. Cool to 4°C. Add sodium thiosulfate if residual chlorine, 7 days with pH > 2, 14 days with pH ≤ 2[8].	8260B	40 mL glass, VOA vial (in triplicate) with Teflon®-lined septa without headspace. Cool to 4°C. Add sodium thiosulfate if residual chlorine, 1:1 HCl to pH ≤ 2, 14 days with pH ≤ 2[9].
	Solid[5]	5 g or 25 g	--	N/A	8260B	4 or 8 oz glass with Teflon®-lined lid. Cool to 4 °C, 14 days. Field preserved with sodium bisulfate solution for low level analysis, or with methanol for medium level analysis. Soil sample can also be taken by using the EnCore™ sampler and preserved in the lab within 48 hrs of sampling. Maximum holding time for EnCore™ sampler is 48 hrs (before the sample is added to methanol or sodium bisulfate). Cool to 4°C[(12)]
	Waste	5 g or 25 g	--	N/A	8260B	4 or 8 oz glass with Teflon®-lined lid, Cool 4 °C, 14 days. Field preserved with sodium bisulfate solution for low level analysis, or with methanol for medium level analysis. Soil sample can also be taken by using the EnCore™ sampler and preserved in the lab within 48 hrs of sampling. Maximum holding time for Encore™ sampler is 48 hrs (before sample is added to methanol or sodium bisulfate). Cool to 4°C[12]

Footnotes

[1] Minimum sample size indicates sample amount needed for a single analysis. Matrix spikes or duplicates will require an additional sample amount of at least this amount for each additional QC sample aliquot required.

[2] National Pollutant Discharge Elimination System - 40 CFR Part 136, Appendix A.

[3] Holding times are calculated from the date of collection.

[4] Resource Conservation and Recovery Act, Test Methods for Evaluating Solid Waste, Physical/Chemical Methods, Third Edition, September 1986. Contains Final Update I (July 1992), Final Update IIA (August 1993), Final Update II (September 1994), Final Update IIB (January 1995), and Final Update III (December 1996).

[5] Solid matrix type includes soil, sediment, sludge or other solids not classified as waste.

[6] Only one determination method is listed when separate methods are required for preparation and analysis.

[7] Method 1664 was promulgated by the EPA with an effective date of June 14, 1999.

[8] For acrolein and acrylonitrile the pH should be adjusted to 4-5. This pH adjustment is not required if acrolein is not measured. Samples requiring analysis of acrolein that received no pH adjustment must be analyzed within three days of sampling.

[9] For acrolein and acrylonitrile the pH should be adjusted to 4-5.

[10] Method not listed in 40 CFR Part 136.

[11] Should only be used in the presence of residual chlorine.

[12] Depending on regulatory programs, EnCore™ samplers may be preserved for up to 14 days from sampling by freezing at -5 to-12°C until analysis. Alternatively the EnCore™ sample may be transferred to a 40-ml VOA vial and preserved by freezing at -5 to -12°C until analysis. Some regulatory agencies may require 4 or 8 oz glass with Teflon®-lined lid, Cool 4°C, 14 days. This technique is not recommended, but will be supported where required. (Preservation and holding times are subject to client specifications.)

Table 23-3.

Sample Containers, Preservatives, and Holding Times for TCLP[1] and SPLP[2]

Analytical Parameters	Matrix	Minimum Sample Size	TCLP Method 1311 and SPLP Method 1312 Requirements	
			From Field Collection to TCLP/SPLP Extraction	From TCLP/SPLP Extraction to Analysis
Mercury	Liquid Solid Waste	1L	1L glass, Cool, 4°C, 28 days	Glass or polyethylene 28 days
Metals (except mercury)	Liquid Solid Waste	1L	1L glass, Cool, 4°C, 180 days	Glass or polyethylene 180 days
Semivolatiles	Liquid Solid Waste	1L	1L glass, Cool 4°C, 14 days	1L glass Extraction of leachate within 7 days of TCLP extraction, Analyze extract within 40 days
Volatiles	Liquid Solid Waste	6 oz	4 oz glass, Cool 4°C, 14 days	40 mL glass, 14 days

Footnotes

1 TCLP = Toxicity Characteristic Leaching Procedure

2 SPLP = Synthetic Precipitation Leaching Procedure

SECTION 24

HANDLING OF SAMPLES
(NELAC 5.5.8)

Sample management procedures at TestAmerica North Canton ensure that sample integrity and custody are maintained and documented from sampling/receipt through disposal.

24.1 CHAIN OF CUSTODY (COC)

The COC form is the written documented history of any sample and can be initiated when bottles are sent to the field, or at the time of sampling. This form is completed by the sampling personnel and accompanies the samples to the laboratory where it is received and stored under the laboratory's custody. The purpose of the COC form is to provide a legal written record of the handling of samples from the time of collection until they are received at the laboratory. It also serves as the primary written request for analyses from the client to the laboratory. The COC form acts as a purchase order for analytical services when no other contractual agreement is in effect. An example of a COC form may be found in Figure 24-1.

24.1.1 Field Documentation

The information the sampler needs to provide at the time of sampling on the container label is:

- Sample identification
- Date and time
- Preservative

During the sampling process, the COC form is completed and must be legible (see Figure 24-1). This form includes information such as:

- Client name, address, phone number and fax number (if available)
- Project name and/or number
- The sample identification
- Date, time and location of sampling
- Sample collectors name
- The matrix description
- The container description
- The total number of each type of container
- Preservatives used
- Analysis requested
- Requested turnaround time (TAT)
- Any special instructions
- Purchase Order number or billing information (e.g. quote number) if available
- The date and time that each person received or relinquished the sample(s), including their signed name.

The samples are stored in a cooler with ice, as applicable, and remain solely in the possession of the client's field technician until the samples are delivered to the laboratory. The sample collector must assure that each container is in his/her physical possession or in his/her view at all times, or stored in such a place and manner to preclude tampering. The field technician relinquishes the samples in writing on the COC form to the sample control personnel at the laboratory or to a TestAmerica courier. Samples are only considered to be received by lab when personnel at the laboratory have physical contact with the samples.

Note: Independent couriers are not required to sign the COC form. The COC is usually kept in the sealed sample cooler. The COC is stored with project information and the report.

24.1.2 Legal / Evidentiary Chain-of-Custody

The lab does not accept samples that require legal chain-of-custody.

24.2 SAMPLE RECEIPT

Samples are received at the laboratory by designated sample receiving personnel and a unique laboratory project identification number is assigned. Each sample container shall be assigned a unique sample identification number that is cross-referenced to the client identification number such that traceability of test samples is unambiguous and documented. Each sample container is affixed with a durable sample identification label. Sample acceptance, receipt, tracking and storage procedures are summarized in the following sections. SOP NC-SC-0005, Sample Receiving and Sample Control, describes the laboratory's sample receipt procedure.

24.2.1 Laboratory Receipt

Samples shall be received and logged in at TestAmerica by a designated sample custodian or other properly trained associate. Upon sample receipt, the sample custodian shall, as appropriate:

- Wear appropriate personal protective equipment. At a minimum, this consists of cut-resistant gloves, a lab coat, and safety glasses
- Examine the shipping containers to verify that the custody tape is intact
- Examine all sample containers for damage
- Open shipping containers in adequately ventilated areas to assure worker safety
- Determine if the temperature required by the requested testing program has been maintained during shipment. Document the shipping container temperature on the Cooler Receipt Form
- Compare samples received against those listed on the COC
- Verify that sample holding times have not been exceeded
- Examine all shipping records for accuracy and completeness
- Determine sample pH (if required for the scheduled analysis) (except VOA and TOX samples) and record on the Cooler Receipt Form (CRF)
- Sign and date the COC immediately (only after shipment is accepted) and attach the waybill
- Note any problems associated with the coolers and samples on the cooler receipt form and notify the PM who in turn notifies the client

- Attach durable (water-resistant) laboratory sample container labels with unique laboratory identification number and test
- Place the samples in proper laboratory storage.

A Cooler Receipt Form (CRF) or an equivalent form/system is generated by sample control during the sample log-in process to document anomalies identified upon the receipt of samples in the laboratory. These anomalies are outside of laboratory control and do not require corrective actions to be taken within the laboratory. The affected client shall be notified by the PM or designee of all CRFs generated for their samples. The PM is responsible for resolving with the client how to proceed with the samples and documenting the decision to proceed with the analysis of compromised samples. CRFs must be resolved prior to sample preparation and analysis. The completed CRF shall be stored in the project file. An example CRF is shown in Figure 24-4. The report narrative will include an explanation of sample receiving related anomalies.

24.2.2 Exceptions or Discrepancies

TestAmerica reserves the right to reject samples for any of the following reasons:

- No custody seals as required by project
- No chain of custody documentation provided
- Preservation inappropriate for analysis requested
- Sample container inappropriate for analysis requested
- Sample received out of holding time for analysis requested
- Incomplete sample information provided
- Discrepancies between COC and sample labels
- Samples have high levels of polychlorinated dibenzo-p-dioxins/ dibenzo furans (PCDD/PCDFs)
- Samples have a high level gross alpha or beta radiation
- Samples are from a site known to contain chemical warfare agents (CWAs) and the samples have not been screened for them.
- Samples containing high levels of PCBs, Cyanides, Sulfides, and Hydrofluoric Acid.
- Tissue samples that may contain viruses harmful to humans.
- Samples with percent levels of Target analytes must be discussed in advance before receipt.

These or any other project exceptions or discrepancies are discussed with the client and agreed upon action taken.

24.2.3 Sample Log-In

Sample log-in activities at TestAmerica North Canton are fully documented in SOP NC-SC-0005, Sample Receiving and Sample Control. The following is a general description of the log-in process:

- Client Name, Project Name, Address, Phone, Fax, Report to information, invoice to information. (Most of this information is "default information" that is stored in the LIMS.)
- Date and time sampled
- Date and time received
- Job and/or project description, sample description
- Sample matrix, special sample remarks
- Reporting requirements, i.e., QC level, report format, invoicing format
- Turn-around-time requirements
- Parameters (methods and reporting limits or MDLs are default information for a given parameter)

24.3 SAMPLE ACCEPTANCE POLICY

The laboratory has a written sample acceptance policy outlined in SOP NC-SC-0005, Sample Receiving and Sample Control, that clearly outlines the circumstances under which samples shall be accepted or rejected. These include:

- A COC filled out completely
- Samples must be properly labeled
- Proper sample containers with adequate volume for the analysis and necessary QC
- Samples must be preserved according to the requirements of the requested analytical method
- Sample holding times must be adhered to
- All samples submitted for water/solid Volatile Organic analyses must have a Trip Blank submitted at the same time
- The Project Manager will be notified if any sample is received in damaged condition.

Data from samples which do not meet these criteria are flagged and the nature of the variation from policy is defined. A copy of the sample acceptance policy is provided to each client prior to shipment of samples.

24.4 SAMPLE STORAGE

In order to avoid deterioration, contamination or damage to a sample during storage and handling, from the time of receipt until all analyses are complete, samples are stored in refrigerators suitable for the sample matrix. Metals samples may be unrefrigerated. In addition, samples to be analyzed for volatile organic parameters are stored in separate refrigerators designated for volatile organic parameters only. Samples are never to be stored with reagents, standards or materials that may create contamination.

The primary considerations for sample storage are:

- Maintenance at the method prescribed temperature, if required
- Maintenance of sample integrity through adequate protection from contamination from outside sources or from cross-contamination of samples. Low-level and high-level samples,

when known, must be stored separately. Samples and standards must be stored in separate refrigerators or freezers. Storage areas for volatile organic test requests must be monitored weekly by the analysis of a holding (refrigerator) blank (an aliquot of contaminant-free water stored in a VOA vial)

- Security of samples within the laboratory.

The requirements listed in Tables 23-1 through 23-3 for temperatures and holding times shall be used. Placing of samples in the proper storage environment is the responsibility of sample control personnel. TestAmerica will assign individuals the responsibility of notifying the Group/Team Leaders or their designees if there are any samples which must be analyzed immediately because of holding time requirements.

Access to the laboratory is controlled such that sample storage need not be locked at all times unless a project specifically demands it. Samples are accessible to laboratory personnel only. Visitors to the laboratory are prohibited from entering the refrigerator and laboratory areas unless accompanied by an employee of TestAmerica.

24.5 HAZARDOUS SAMPLES AND FOREIGN SOILS

All samples per SOP are treated as hazardous. If any extra or known hazards are present in the sample, the sample is flagged and precautions / instructions are put in the comments. Hazardous samples are segregated out, and go into the waste stream profile for the nature of the hazard. All soils--foreign and domestic--go to a USDA approved incinerator.

24.6 SAMPLE SHIPPING

In the event that the laboratory needs to ship samples, the samples are placed in a cooler with enough ice to ensure the samples remain just above freezing and at or below 6.0°C during transit. The samples are carefully surrounded by packing material to avoid breakage (yet maintain appropriate temperature). A trip blank is enclosed for those samples requiring water/solid volatile organic analyses. The Chain-of-Custody form is signed by the Sample Control technician and attached to the shipping paperwork. Samples are generally shipped overnight express or hand-delivered by a TestAmerica courier to maintain sample integrity. All personnel involved with shipping and receiving samples must be trained to maintain the proper chain-of-custody documentation and to keep the samples intact and on ice. The Environmental, Health and Safety Manual contains additional shipping requirements.

24.7 SAMPLE DISPOSAL

Samples should be retained for a minimum of 30 days after the project report is sent, however, provisions may be made for earlier disposal of samples once the holding time is exceeded. Some samples are required to be held for longer periods based on regulatory or client requirements (e.g., 60 days after project report is sent). The laboratory must follow the longer sample retention requirements where required by regulation or client agreement. Several possibilities for sample disposal exist: the sample may be consumed completely during analysis, the sample may be returned to the customer or location of sampling for disposal, or the sample may be disposed of in accordance with the laboratory's waste disposal procedures (SOP NC-SC-0005, Sample Receiving and Sample Control, and the Facility Addendum to the Corporate

Safety Manual.) All procedures in the laboratory Environmental, Health and Safety Manual are followed during disposal. Samples are normally maintained in the laboratory no longer than two months from receipt unless otherwise requested. Unused portions of samples found or suspected to be hazardous according to state or federal guidelines may be returned to the client upon completion of the analytical work.

If a sample is part of a known litigation, the affected legal authority, sample data user, and/or submitter of the sample must participate in the decision about the sample disposal. All documentation and correspondence concerning the disposal decision process must be kept on file. Pertinent information includes the date of disposal, nature of disposal (such as sample depletion, hazardous waste facility disposal, return to client), and names of individuals who conducted the arrangements and physically completed the task. Sample labels are destroyed through the disposal method, e.g., samples are incinerated. A Waste Manifest is completed.

Figure 24-1. Example: Chain of Custody (COC)

TestAmerica North Canton
4101 Shuffle Drive N.W.
North Canton, OH 44720
phone 330-497-9396 fax 330-497-0772

Chain of Custody Record

Client Contact	Project Manager:	Site Contact:	Date:
Your Company Name here	Tel/Fax:	Lab Contact:	Carrier:
Address	Analysis Turnaround Time		
City/State/Zip	Calendar (C) or Work Days (W)		
(xxx) xxx-xxxx Phone	TAT if different from Below _____		
(xxx) xxx-xxxx FAX	☐ 2 weeks		
Project Name:	☐ 1 week		
Site:	☐ 2 days		
P O #	☐ 1 day		

Sample Identification	Sample Date	Sample Time	Sample Type	Matrix	# of Cont.	Filtered Sample																	

Preservation Used: 1= Ice, 2= HCl; 3= H2SO4; 4=HNO3; 5=NaOH; 6= Other _____

Possible Hazard Identification
☐ *Non-Hazard* ☐ *Flammable* ☐ *Skin Irritant* ☐ *Poison B* ☐ *Unknown* ☐

Sample Disposal (A fee may be assessed if samples are retained longer than 1 month)
☐ *Return To Client* ☐ *Disposal By Lab* ☐ *Archive For* _____ *Months*

Special Instructions/QC Requirements & Comments:

Relinquished by:	Company:	Date/Time:	Received by:	Company:
Relinquished by:	Company:	Date/Time:	Received by:	Company:
Relinquished by:	Company:	Date/Time:	Received by:	Company:

Figure 24-2.

Example: Custody Seals

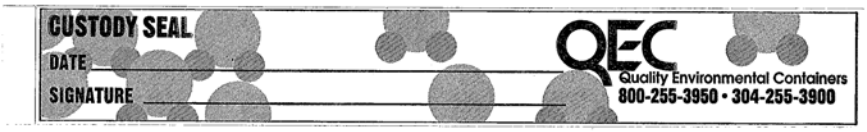

Figure 24-3.

Example: Internal Chain of Custody (COC)

TestAmerica Laboratories, Inc.
Sample Control Record

Client:

Lot Number:

Case Number/SDG:

Storage Location:

Laboratory Sample ID	Transferred By	Date	Entered	Removed	Reason	Date Returned

Figure 24-4.

Example: Cooler Receipt Form (Page 1)

TestAmerica Cooler Receipt Form/Narrative **Lot Number:_____**

North Canton Facility

Client _____ Project _____ Quote # _____

Cooler Received on _____ Opened on _____ By _____

FedEx ☐ Client Drop Off ☐ UPS ☐ DHL ☐ FAS ☐ TestAmerica Courier☐

Stetson ☐ US Cargo ☐ Other _____ (Signature)

TestAmerica Cooler # _____ Foam Box ☐ Client Cooler ☐ Other_____

1. Were custody seals on the outside of the cooler? Yes ☐ No ☐ Intact? Yes ☐ No ☐ NA ☐
   If YES, Quantity_____
   Were custody seals on the outside of cooler signed and dated? Yes ☐ No ☐ NA ☐
   Were custody seals on the bottles? Yes ☐ No ☐
   If YES, are there any exceptions _____
2. Shipper's packing slip attached to this form? Yes ☐ No ☐
3. Did custody papers accompany the sample(s)? Yes ☐ No ☐ Relinquished by client? Yes ☐ No ☐
4. Did you sign the custody papers in the appropriate place? Yes ☐ No ☐
5. Packing material used: Bubble Wrap ☐ Foam ☐ None ☐ Other _____
6. Cooler temperature upon receipt _____ °C (see back of form for multiple coolers/temps)

METHOD: IR ☐ Other ☐ _____

COOLANT: Wet Ice ☐ Blue Ice ☐ Dry Ice ☐ Water ☐ None ☐

7. Did all bottles arrive in good condition (Unbroken)? Yes ☐ No ☐
8. Could all bottle labels and/or tags be reconciled with the COC? Yes ☐ No ☐
9. Were samples at the correct pH upon receipt? Yes ☐ No ☐ NA ☐
10. Were correct bottles used for the tests indicated? Yes ☐ No ☐
11. Were air bubbles >6 mm in any VOA vials? Yes ☐ No ☐ NA ☐
12. Sufficient quantity received to perform indicated analyses? Yes ☐ No ☐
13. Was a Trip Blank present in the cooler? Yes ☐ No ☐ Were VOAs on the COC? Yes ☐ No ☐

Contacted PM _____ Date _____ by _____ via Voice Mail ☐ Verbal ☐ Other ☐

Concerning_____

14. CHAIN OF CUSTODY

The following discrepancies occurred:

_____

_____

_____

15. SAMPLE CONDITION

Sample(s)_____ were received after the recommended holding time had expired.

Sample(s)_____ were received in a broken container.

16. SAMPLE PRESERVATION

Sample(s) _____ were further preserved in sample receiving to meet recommended pH level(s). *Nitric Acid Lot #*071707-*HNO3 - Sulfuric Acid Lot #* 092006-*H2SO4; Sodium Hydroxide Lot #* 122805 -*NaOH; Hydrochloric Acid Lot #* 092006-*HCl; Sodium Hydroxide and Zinc Acetate Lot #* 050205-*CH3COO2ZN/NaOH*

What time was preservative added to sample(s)? _____

Sample(s)_____were received with bubble > 6 mm in diameter (Notify PM)

Client ID	pH	Date	Initials

Example: Cooler Receipt Form (Page 2)

TestAmerica Cooler Receipt Form/Narrative
North Canton Facility

Client ID	pH	Date	Initials
Cooler	**Temp °C**	**Method**	**Coolant**

Discrepancies Cont'd

SECTION 25.0

ASSURING THE QUALITY OF TEST RESULTS
(NELAC 5.5.9)

25.1 OVERVIEW

In order to assure our clients of the validity of their data, the laboratory continuously evaluates the quality of the analytical process. The analytical process is controlled not only by instrument calibration as discussed in Section 21, but also by routine process quality control measurements (e.g. Blanks, Laboratory Control Samples (LCS), Matrix Spikes (MS), duplicates (DUP), surrogates, Internal Standards (IS)). These quality control checks are performed as required by the method or regulations to assess precision and accuracy. In addition to the routine process quality control samples, Proficiency Testing (PT) Samples (concentrations unknown to laboratory) are analyzed to help ensure laboratory performance.

25.2 CONTROLS

Sample preparation or pre-treatment is commonly required before analysis. Typical preparation steps may include homogenization, grinding, solvent extraction, sonication, acid digestion, distillation, reflux, evaporation, drying and ashing. During these pre-treatment steps, samples are arranged into discreet manageable groups referred to as preparation (prep) batches. Prep batches provide a means to control variability in sample treatment. Control samples are added to each prep batch to monitor method performance and are processed through the entire analytical procedure with investigative/field samples.

25.3 NEGATIVE CONTROLS

25.3.1 **Method Blanks** are used to assess preparation and analysis for possible contamination during the preparation and processing steps.

25.3.1.1 The method blank is prepared from a clean matrix similar to that of the associated samples that is free from target analytes (e.g., Reagent water, Ottawa sand, glass beads, etc.) and is processed along with and under the same conditions as the associated samples.

25.3.1.2 The method blank goes through all of the steps of the process, including as necessary, filtration, clean-ups, etc.

25.3.1.3 The specific frequency of use for method blanks during the analytical sequence is defined in the specific standard operating procedure for each analysis. Generally it is one for each batch of samples--not to exceed 20 environmental samples.

25.3.1.4 Evaluation criteria and corrective action for method blanks is defined in the specific standard operating procedure for each analysis. Generally, corrective action is taken if the concentration of a target analyte in the blank is at or above the reporting limit as established by the method or regulation. Refer to Policy QA-003, TestAmerica North Canton Quality Control Program.

- The source of contamination is investigated
- Measures are taken to minimize or eliminate the source of the contamination
- Affected samples are reprocessed or the results are qualified on the final report.

25.3.2 **Calibration Blanks** are prepared and analyzed along with calibration standards where applicable. They are prepared using the same reagents that are used to prepare the standards. In some analyses the calibration blank may be included in the calibration curve.

25.3.3 **Instrument Blanks** are blank reagents or reagent water that may be processed during an analytical sequence in order to assess contamination in the analytical system. In general, instrument blanks are used to differentiate between contamination caused by the analytical system and that caused by the sample handling or sample prep process. Instrument blanks may also be inserted throughout the analytical sequence to minimize the effect of carryover from samples with high analyte content.

25.3.4 **Trip Blanks** are required to be submitted by the client with each shipment of samples requiring aqueous and solid volatiles analyses. A trip blank may be purchased (certified clean) or is prepared by the laboratory by filling a clean container with pure deionized water that has been purged to remove any volatile compounds. Appropriate preservatives are also added to the container. The trip blank is sent with the bottle order and is intended to reflect the environment that the containers are subjected to throughout shipping and handling and help identify possible sources if contamination is found. The field sampler returns the trip blank in the cooler with the field samples. Trip Blanks are also sometimes referred to as Travel Blanks.

25.3.5 **Field Blanks** are sometimes used for specific projects by the field samplers. A field blank prepared in the field by filling a clean container with pure reagent water and appropriate preservative, if any, for the specific sampling activity being undertaken. (EPA OSWER)

25.3.6 **Equipment Blanks** are also sometimes created in the field for specific projects. An equipment blank is a sample of analyte-free media which has been used to rinse common sampling equipment to check effectiveness of decontamination procedures. (NELAC)

25.3.7 **Holding Blanks**, also referred to as refrigerator or freezer blanks, are used to monitor the sample storage units for volatile organic compounds during the storage of VOA samples in the laboratory**.** Refer to SOP NC-QA-0020, Laboratory Holding Blanks, for additional information on holding blank criteria.

25.3.8 **Field blanks**, equipment blank and trip blanks, when received, are analyzed in the same manner as other field samples. When known, blanks should not be selected for matrix QC, as it does not provide information on the behavior of the target compounds in the field samples. Usually, the client sample ID will provide information to identify the field blanks with labels such as "FB", "EB", or "TB".

25.4 POSITIVE CONTROLS

Control samples, e.g., QC indicators, are analyzed with each batch of samples to evaluate data based upon:

1) Method Performance (Laboratory Control Sample (LCS) or Blank Spike (BS)), which entails both the preparation and measurement steps

2) Matrix Effects (Matrix Spike (MS) or Sample Duplicate (MD, DUP), which evaluates field sampling accuracy, precision, representativeness, interferences, and the effect of the matrix on the method performed. Each regulatory program and each method within those programs specify the control samples that are prepared and/or analyzed with a specific batch

Note that frequency of control samples vary with specific regulatory, methodology and project specific criteria. Complete details on method control samples are as listed in each analytical SOP.

25.4.1 <u>Method Performance Control - Laboratory Control Sample (LCS)</u>

25.4.1.1 The LCS measures the accuracy of the method in a blank matrix and assesses method performance independent of potential field sample matrix affects in a laboratory batch.

25.4.1.2 The LCS is prepared from a clean matrix similar to that of the associated samples that is free from target analytes (for example: Reagent water, Ottawa sand, glass beads, etc.) and is processed along with and under the same conditions as the associated samples. The LCS is spiked with verified known amounts of analytes or is made of a material containing known and verified amounts of analytes, taken through all preparation and analysis steps along with the field samples. Where there is no preparation taken for an analysis (such as in aqueous volatiles), or when all samples and standards undergo the same preparation and analysis process (such as Phosphorus), a calibration verification standard is reported as the LCS. In some instances where there is no practical clean solid matrix available, aqueous LCS's may be processed for solid matrices; final results may be calculated as mg/kg or ug/kg, assuming 100% solids and a weight equivalent to the aliquot used for the corresponding field samples, to facilitate comparison with the field samples.

25.4.1.3 Certified pre-made reference material purchased from a NIST/A2LA accredited vendor may also be used for the LCS when the material represents the sample matrix or the analyte is not easily spiked (e.g. solid matrix LCS for metals, TDS, etc.).

25.4.1.4 As stated in the opening of this section, the LCS goes through all of the steps of the process (including as necessary: filtration, clean-ups, etc.).

25.4.1.5 The specific frequency of use for LCS during the analytical sequence is defined in the specific standard operating procedure for each analysis. It is generally one for each batch of samples; not to exceed 20 environmental samples.

25.4.1.6 If the mandated or requested test method, or project requirements, do not specify the spiking components, the laboratory shall spike all reportable components to be reported in the Laboratory Control Sample (and Matrix Spike) where applicable, e.g., no spike of pH. However, in cases where the components interfere with accurate assessment (such as simultaneously spiking chlordane, toxaphene and PCBs in

Method 608), the test method has an extremely long list of components or components are incompatible, at a minimum, a representative number of the listed components (see below) shall be used to control the test method. The selected components of each spiking mix shall represent all chemistries, elution patterns and masses, permit specified analytes and other client requested components. However, the laboratory shall ensure that all reported components are used in the spike mixture within a two-year time period.

25.4.1.6.1 For methods that have 1-10 target analytes, spike all components.

25.4.1.6.2 For methods that include 11-20 target analytes, spike at least 10 or 80%, whichever is greater.

25.4.1.6.3 For methods with more than 20 target analytes, spike at least 16 components.

25.4.1.6.4 Exception: Due to analyte incompatibility in pesticides, Toxaphene and Chlordane are only spiked at client request based on specific project needs.

25.4.1.6.5 Exception: Due to analyte incompatibility between the various PCB Aroclors, Aroclors 1016 and 1260 are used for spiking as they cover the range of all of the Aroclors. Specific Aroclors may be used by request on a project specific basis.

25.4.1.7 **Accuracy Calculation**: Percent Recovery (%R) Calculation (applies to LCS, CCV, Surrogates, and Matrix Spikes.

$$\%R = \frac{AV}{TV} \times 100$$

Where: AV = Analyzed Value
TV = True Value

25.5 SAMPLE MATRIX CONTROLS

25.5.1 Matrix Spikes (MS)

25.5.1.1 The Matrix spike is used to assess the effect sample matrix of the spiked sample has on the precision and accuracy of the results generated by the method used.

25.5.1.2 An MS is essentially a sample fortified with a known amount of the test analyte(s). At a minimum, with each matrix-specific batch of samples processed, an MS is carried through the complete analytical procedure. Unless specified by the client, samples used for spiking are randomly selected and rotated between different client projects.

25.5.1.3 If the mandated or requested test method does not specify the spiking components, the laboratory shall spike all reportable components to be reported in the Laboratory Control Sample and Matrix Spike. However, in cases where the components interfere with accurate assessment (such as simultaneously spiking chlordane, toxaphene and PCBs in Method 608), the test method has an extremely long list of components or components are incompatible, a representative number of the listed

components (see LCS analytes in Section 25.4.1.6 above) may be used to control the test method. The selected components of each spiking mix shall represent all chemistries, elution patterns and masses, permit-specified analytes and other client requested components. However, the laboratory shall ensure that all reported components are used in the spike mixture within a two-year time period.

25.5.1.4 The percent recovery calculation for matrix spikes is essentially the same as the calculation shown in Section 25.4.1.7, except that:

AV = Sp – Sa

Where: Sp = Spike result
Sa = Sample result

25.5.2 **Surrogate Spikes**

25.5.2.1 Surrogate Spikes are similar to matrix spikes except the analytes are compounds with properties that mimic the analyte of interest and are unlikely to be found in environment samples.

25.5.2.2 Surrogate compounds are added to all samples, standards, and blanks, for all organic chromatography methods except when the matrix precludes its use or when a surrogate is not available. The recovery of the surrogates is compared to the acceptance limits for the specific method (also refer to Section 25.5). Poor surrogate recovery may indicate a problem with sample composition and shall be reported, with data qualifiers, to the client whose sample produced poor recovery.

25.5.3 **Duplicates**

25.5.3.1 For a measure of analytical precision, with each matrix-specific batch of samples processed, a matrix duplicate (MD or DUP) sample, matrix spike duplicate (MSD), or LCS duplicate (LCSD) is carried through the complete analytical procedure. Duplicate samples are usually analyzed with methods that do not require matrix spike analysis. LCSD's are normally not performed except when regulatory agencies or client specifications require them. The recoveries for the spiked duplicate samples must meet the same laboratory established recovery limits as the accuracy QC samples. If an LCSD is analyzed both the LCS and LCSD must meet the same recovery criteria and be included in the final report. The precision measurement is reported as "Relative Percent Difference" (RPD). Poor precision between duplicates (except LCS/LCSD) may indicate non-homogeneous matrix or sampling.

25.5.3.2 **Precision Calculation** (Relative Percent Difference - RPD)

$$RPD = \frac{|S - D|}{\frac{(S + D)}{2}} \times 100$$

Where: S=Sample Concentration
D=Duplicate Concentration

25.5.4 Internal Standards

25.5.4.1 In most organic analyses, internal standards are spiked into all environmental and quality control samples (including the initial calibration standards). An internal standard is also used with some metals analyses. It is added to sample extracts after the extraction (post-prep). The acceptance criteria in most methods are 50% to 200% of the responses in the mid-point of the corresponding calibration curve. Consult the method-specific SOPs for details on the internal standard compounds, calculations and acceptance criteria.

25.5.4.2 When the internal standard recoveries fall outside these limits, if there are not obvious chromatographic interferences, reanalyze the sample to confirm a possible matrix effect. If the recoveries confirm or there was obvious interference, results are reported from the original analysis and a qualifier is added. If the reanalysis meets internal standard recovery criteria, the second run is reported (or both are reported if requested by the client).

25.6 ACCEPTANCE CRITERIA (CONTROL LIMITS)

25.6.1 Each individual analyte in the LCS, MS, or Surrogate Spike are evaluated against the control limits as published in the test method. Where there are no established acceptance criteria, the laboratory calculates control limits with the use of control charts or, in some cases, utilizes client project specific or regulatory mandated control limits. When this occurs, the regulatory or project limits will supersede the laboratory's in-house limits.

Note: For methods, analytes and matrices with very limited data, e.g., unusual matrices not analyzed often, interim limits are established using available data or by analogy to similar methods or matrices.

25.6.2 Once control limits have been established, they are verified, reviewed, and updated if necessary on an annual basis unless the method requires more frequent updating (e.g. EPA SW846 8000 series methods). Control limits are established per method (as opposed to per instrument) regardless of the number of instruments utilized.

25.6.2.1 The lab should consider the effects of the spiking concentration control limits, and to avoid censoring of data. The acceptance criteria for recovery and precision are often a function of the spike concentration used. Therefore, caution must be used when pooling data to generate control limits.

25.6.2.2 Not only should the results all be from a similar matrix, but the spiking levels should also be approximately the same (within a factor of 2). Similarly, the matrix spike and surrogate results should all be generated using the same set of extraction, cleanup and analysis techniques. For example, results from solid samples extracted by ultrasonic extraction are not mixed with those extracted by Soxhlet.

25.6.2.3 The laboratory should try and avoid discarding data that do not meet a preconceived notion of acceptable performance. This results in a censored data set, which, when used to develop acceptance criteria, will lead to unrealistically narrow criteria. For a 99% confidence interval, one out of every 100 observations likely will still fall outside

the limits. For methods with long analyte lists this may mean occasional failures every batch or two. While professional judgment is important in evaluating data to be used to develop acceptance criteria, specific results are not discarded simply because they do not meet one's expectations. However, data points shall be discarded if they were the result of human or mechanical error or sample concentration exceeded spike level by > 4x.

25.6.3 Laboratory generated % Recovery acceptance (control) limits are generally established by taking ± 3 Standard Deviations (99% confidence level) from the average recovery of a minimum of 20-30 data points (more points are preferred).

25.6.3.1 Regardless of the calculated limit, the limit should be no tighter than the Calibration Verification (ICV/CCV). (Unless the analytical method specifies a tighter limit).

25.6.3.2 In-house limits cannot be any wider than those mandated in a regulated analytical method.

25.6.3.3 The lowest acceptable recovery limit will be 10% (the analyte must be detectable).

25.6.3.4 The maximum acceptable recovery limit will be 200%.

25.6.3.5 The maximum acceptable RPD limit will be 30% for organic methods and 20% for inorganic methods. The minimum RPD limit is 10%.

25.6.3.6 If either the high or low end of the control limit changes by ≤ 10% from previous, the control chart is visually inspected and, using professional judgment, they may be left unchanged if there is no affect on laboratory ability to meet the existing limits.

25.6.4 The lab must be able to generate a current listing of their control limits and track when the updates are performed. In addition, the laboratory must be able to recreate historical control limits. Refer to NC-QA-0018, Statistical Evaluation of Data and Development of Control Charts, for details.

25.6.4.1 One example: The QA Department generates a Quality Control Limit Summary that contains tables that summarize the precision and accuracy acceptability limits for analyses. Unless otherwise noted, limits within these tables are laboratory generated. Once reviewed and approved, the limits are entered into LIMS and are effective immediately. The Quality Assurance department maintains an archive of all limits used within the laboratory.

25.6.5 A LCS that is within the acceptance criteria establishes that the analytical system is in control and is used to validate the process. Samples that are analyzed with an LCS with recoveries outside of the acceptance limits may be determined as out of control and should be reanalyzed if possible. If reanalysis is not possible, then the results for all affected analytes for samples within the same batch must be qualified when reported. The internal corrective action process (see Section 13) is also initiated if an LCS exceeds the acceptance limits. Sample results may be qualified and reported without reanalysis if:

25.6.5.1 The analyte results are below the reporting limit and the LCS is above the upper control limit.

25.6.5.2 If the analytical results are above the relevant regulatory limit and the LCS is below the lower control limit.

25.6.5.3 Or, for NELAC and Department Of Defense (DOD) work, there are an allowable number of Marginal Exceedances (ME):

- <11 analytes 0 marginal exceedances are allowed.
- 11 – 30 Analytes 1 marginal exceedance is allowed
- 31-50 Analytes 2 marginal exceedances are allowed
- 51-70 Analytes 3 marginal exceedances are allowed
- 71-90 Analytes 4 marginal exceedances are allowed
- > 90 Analytes 5 marginal exceedances are allowed

25.6.5.3.1 Marginal exceedances are recovery exceedances between 3 SD and 4 SD from the mean recovery limit (NELAC).

25.6.5.3.2 Marginal exceedances must be random. If the same analyte exceeds the LCS control limit repeatedly, it is an indication of a systematic problem. The source of the error must be located and corrective action taken. The laboratory has a system to monitor marginal exceedances to ensure that they are random.

25.6.5.3.3 Though marginal excedences may be allowed, the data must still be qualified to indicate it is outside of the normal limits.

25.6.6 If the MS/MSDs do not meet acceptance limits, the MS/MSD and the associated spiked sample is reported with a qualifier for those analytes that do not meet limits. If obvious preparation errors are suspected, or if requested by the client, unacceptable MS/MSDs are reprocessed and reanalyzed to prove matrix interference. A more detailed discussion of acceptance criteria and corrective action can be found in Appendix 4 and in Section 13.

25.6.7 If a surrogate standard falls outside the acceptance limits, if there is not obvious chromatographic matrix interference, reanalyze the sample to confirm a possible matrix effect. If the recoveries confirm or there was obvious chromatographic interference, results are reported from the original analysis and a qualifier is added. If the reanalysis meets surrogate recovery criteria, the second run is reported (or both are reported if requested by the client).

25.7 METHOD DETECTION LIMITS (MDLs)

MDLs, calculated as described in Section 20.7, are updated or verified annually, or more often if required by the method.

25.8 ADDITIONAL PROCEDURES TO ASSURE QUALITY CONTROL

25.8.1 The laboratory has written procedures to assure the accuracy of the test method including calibration (see Section 21), use of certified reference materials (see Section 22), and use of PT samples (see Section 16).

25.8.2 A discussion regarding MDLs, Limit of Detection (LOD), and Limit of Quantitation (LOQ) can be found in Section 20.

25.8.3 Use of formulae to reduce data is discussed in the method Standard Operating Procedures and in Section 21.

25.8.4 Selection of appropriate reagents and standards is included in Sections 9 and 22.

25.8.5 A discussion on selectivity of the test is included in Section 5.

25.8.6 Constant and consistent test conditions are discussed in Section 19.

25.8.7 The laboratory sample acceptance policy is included in Section 24.

SECTION 26.0

REPORTING RESULTS
(NELAC 5.5.10)

26.1 OVERVIEW

The results of each test are reported accurately, clearly, unambiguously, and objectively in accordance with State and Federal regulations as well as client requirements. Analytical results are issued in a format that is intended to satisfy customer and laboratory accreditation requirements as well as provide the end user with the information needed to properly evaluate the results. Where there is a conflict between the client requested formats and accreditation requirements or data usability information, accreditation requirements and data usability information will take precedence over client requests. A variety of report formats are available to meet specific needs.

In cases where a client asks for simplified reports, there must be a written request from the client. There still must be enough information that would show any analyses that were out of conformance (QC out of limits) and there should be a reference to a full report that is made available to the client.

Review of reported data is included in Section 20.

26.2 TEST REPORTS

Analytical results are reported in a format that is satisfactory to the client and meets all requirements of applicable accrediting authorities and agencies. A variety of report formats are available to meet specific needs. The report is printed, reviewed, and signed by the appropriate Project Manager. At a minimum, the standard laboratory report shall contain the following information:

26.2.1 A report title with a “Sample Result” header.

26.2.2 Each report page printed includes the laboratory name, address, and telephone number.

26.2.3 A unique identification of the report, e.g. Work Order number, and on each page an identification in order to ensure the page is recognized as part of the report and a clear identification of the end.

Note: Page numbers of report are represented at the bottom of each page. The report is sequentially paginated. The final page of the report is labeled as “End of Report”.

26.2.4 A copy of the Chain-of-Custody (COC).

- Any COCs involved with subcontracting are included.
- Any additional addenda to the report must be treated in a similar fashion so it is a recognizable part of the report and cannot accidentally get separated from the report (e.g. Sampling information).

26.2.5 The name and address of client and a project name/number, if applicable.

26.2.6 Client project manager or other contact

26.2.7 Description and unambiguous identification of the tested sample(s) including the client identification code.

26.2.8 Date of receipt of sample, date and time of collection, and date(s) of test preparation and performance, and time of preparation or analysis if the required holding time for either activity is less than or equal to 72 hours.

26.2.9 Date reported or date of revision, if applicable

26.2.10 Method of analysis including method code (EPA, Standard Methods, etc)

26.2.11 Reporting limit

26.2.12 Method detection limits (if requested)

26.2.13 Definition of Data qualifiers and reporting acronyms, e.g., ND

26.2.14 Sample results

26.2.15 QC data consisting of method blank, surrogate, LCS, and MS/MSD recoveries and control limits

26.2.16 Condition of samples at receipt including temperature. This may be accomplished in a narrative or by attaching sample login sheets (refer to Section 26.2.4 – Item 3, regarding additional addenda).

26.2.17 A statement to the effect that the results relate only to the items tested and the sample as received by the laboratory.

26.2.18 A signature and title of the person(s) accepting responsibility for the content of the report and date of issue. Signatories are appointed by the Lab Director.

26.2.19 When NELAC accreditation is required, the lab shall certify that the test results meet all requirements of NELAC or provide reasons and/or justification if they do not.

26.2.20 The laboratory includes a cover page.

26.2.21 Where applicable, a narrative to the report that explains the issue(s) and corrective action(s) taken in the event that a specific accreditation or certification requirement was not met.

26.2.22 When Soil samples are analyzed, a specific identification as to whether soils are reported on a "wet weight" or "dry weight" basis.

26.2.23 Appropriate laboratory certification number for the state of origin of the sample, if applicable.

26.2.24 If only part of the report is provided to the client (client requests some results before all of it is complete), it must be clearly indicated on the report, e.g., partial report, or how your lab identifies it. A complete report will follow once all of the work has been completed.

26.2.25 Any out-of-network subcontracted analysis results are provided as a separate report on the official letterhead of the subcontractor. All in-network subcontracting is clearly identified on the report as to which laboratory performed a specific analysis.

26.3 REPORTING LEVEL OR REPORT TYPE

TestAmerica North Canton offers two levels of quality control reporting. Each level, in addition to its own specific requirements, contains all the information provided in the preceding level. The packages provide the following information in addition to the information described above:

- Standard report – all features in Section 26.2
- Expanded deliverable – standard report

Presented on CLP-like forms and relevant calibration information. All supporting raw data is supplied.

In addition to the various levels of QC packaging, the laboratory also provides reports in diskette deliverable form. Procedures used to ensure client confidentiality are outlined in Section 26.7.

26.3.1 Electronic Data Deliverables (EDDs)

EDDs are routinely offered as part of TestAmerica's services. TestAmerica North Canton offers a variety of EDD formats.

EDD specifications are submitted to the IT department by the PM for review and undergo the contract review process. Once the facility has committed to providing data in a specific electronic format, the coding of the format may need to be performed. This coding is documented and validated. The validation of the code is retained by the IT staff coding the EDD.

EDDs shall be subject to a review to ensure their accuracy and completeness. If EDD generation is automated, review may be reduced to periodic screening if the laboratory can demonstrate that it can routinely generate that EDD without errors. Any revisions to the EDD format must be reviewed until it is demonstrated that it can routinely be generated without errors. If the EDD can be reproduced accurately and if all subsequent EDDs can be produced error-free, each EDD does not necessarily require a review.

26.4 SUPPLEMENTAL INFORMATION FOR TEST

The lab identifies any unacceptable QC analyses or any other unusual circumstances or observations such as environmental conditions and any non-standard conditions that may have affected the quality of a result. This is typically in the form of a footnote or a qualifier and/or a narrative explaining the discrepancy in the front of the report. Refer to Appendix 8 for a list of the laboratory's standard footnotes and qualifiers.

26.4.1 Numeric results with values outside of the calibration range, either high or low are qualified as 'estimated'.

26.4.2 Where quality system requirements are not met, a statement of compliance/non-compliance with requirements and/or specifications, including identification of test results derived from any sample that did not meet NELAC sample acceptance requirements such as improper container, holding time, or temperature.

26.4.3 Where applicable, a statement on the estimated uncertainty of measurements; information on uncertainty is needed when a client's instructions so require.

26.4.4 Opinions and Interpretations - The test report contains objective information, and generally does not contain subjective information such as opinions and interpretations. If such information is required by the client, the Laboratory Director will determine if a response can be prepared. If so, the Laboratory Director will designate the appropriate member of the management team to prepare a response. The response will be fully documented, and reviewed by the Laboratory Director, before release to the client. There may be additional fees charged to the client at this time, as this is a non-routine function of the laboratory.

When opinions or interpretations are included in the report, the laboratory provides an explanation as to the basis upon which the opinions and interpretations have been made. Opinions and interpretations are clearly noted as such and where applicable, a comment should be added suggesting that the client verify the opinion or interpretation with their regulator.

26.5 ENVIRONMENTAL TESTING OBTAINED FROM SUBCONTRACTORS

If TestAmerica North Canton is not able to provide the client the requested analysis, the samples would be subcontracted following the procedures outlined in Section 8.

Data reported from analyses performed by a subcontractor laboratory are clearly identified as such on the analytical report provided to the client. Results from a subcontract laboratory outside of the TestAmerica network are reported to the client on the subcontract laboratory's original report stationary and the report includes any accompanying documentation.

26.6 CLIENT CONFIDENTIALITY

In situations involving the transmission of environmental test results by telephone, facsimile or other electronic means, client confidentiality must be maintained.

TestAmerica will not intentionally divulge to any person (other than the Client or any other person designated by the Client in writing) any information regarding the services provided by TestAmerica or any information disclosed to TestAmerica by the Client. Furthermore,

information known to be potentially endangering to national security or an entity's proprietary rights will not be released.

Note: This shall not apply to the extent that the information is required to be disclosed by TestAmerica under the compulsion of legal process. TestAmerica will, to the extent feasible, provide reasonable notice to the client before disclosing the information.

Note: Authorized representatives of an accrediting authority are permitted to make copies of any analyses or records relevant to the accreditation process, and copies may be removed from the laboratory for purposes of assessment.

26.6.1 Report deliverable formats are discussed with each new client. If a client requests that reports be faxed or e-mailed, the reports are faxed with a cover sheet or e-mailed with the following note that includes a confidentiality statement similar to the following:

"Confidentiality Notice: The information contained in this message is intended only for the use of the addressee, and may be confidential and/or privileged. If the reader of this message is not the intended recipient, or the employee or agent responsible to deliver it to the intended recipient, you are hereby notified that any dissemination, distribution or copying of this communication is strictly prohibited. If you have received this communication in error, please notify the sender immediately."

26.7 FORMAT OF REPORTS

The format of reports are designed to accommodate each type of environmental test carried out and to minimize the possibility of misunderstanding or misuse.

26.8 AMENDMENTS TO TEST REPORTS

Corrections, additions, or deletions to reports are only made when justification arises through supplemental documentation. Justification is documented using the laboratory's corrective action system (refer to Section 13).

If, after issuance of a report, TestAmerica North Canton observes any mistake that affects the results reported or the QC interpretation of those results, the client will be notified. After issuance of the report, the laboratory report remains unchanged. Any material amendments to a report after issue made only in the form of a further document, or data transfer must include the statement "Supplement to Test Report" or otherwise identified.

When the report is re-issued, a notation is placed on the cover/signature page of the report or at the top of the narrative page with a brief explanation of reason for the re-issue.

26.9 POLICIES ON CLIENT REQUESTS FOR AMENDMENTS

26.9.1 Sample Reanalysis Policy

Because there is a certain level of uncertainty with any analytical measurement a sample reanalysis may result in either a higher or lower value from an initial sample analysis. There are

also variables that may be present (e.g. sample homogeneity, analyte precipitation over time, etc.) that may affect the results of a reanalysis. Based on the above comments, the laboratory will reanalyze samples at a client's request with the following caveats. Client specific arrangements for reanalysis protocols can be established.

- Homogenous samples: If a reanalysis agrees with the original result to within the RPD limits for MS/MSD or Duplicate analyses, or within $\pm$ 1 reporting limit for samples $\leq$ 5x the reporting limit, the original analysis will be reported. At the client's request, both results may be reported on the same report but not on two separate reports.

- If the reanalysis does not agree (as defined above) with the original result, then the laboratory will investigate the discrepancy and reanalyze the sample a third time for confirmation if sufficient sample is available.

- Any potential charges related to reanalysis are discussed in the contract terms and conditions or discussed at the time of the request. The client will typically be charged for reanalysis unless it is determined that the lab was in error.

- Due to the potential for increased variability, reanalysis may not be applicable to Non-homogenous, Encore, and Sodium Bisulfate preserved samples. See the Group Leader, QA Manager, or Laboratory Director/Manager if unsure.

26.9.2 Policy on Data Omissions or Reporting Limit Increases

Fundamentally, our policy is simply to not omit previously reported results, including data qualifiers, or to not raise reporting limits and report sample results as ND. This policy has few exceptions. Exceptions are:

- Laboratory error.
- Sample identification is indeterminate (confusion between COC and sample labels).
- An incorrect analysis (not analyte) was requested, e.g., COC lists 8315 but client wanted 8310. A written request for the change is required.
- Incorrect limits reported based on regulatory requirements.
- The requested change has absolutely *no possible* impact on the interpretation of the analytical results and there is *no possibility* of the change being interpreted as misrepresentation by anyone inside or outside of our company.

26.9.3 Multiple Reports

TestAmerica does not issue multiple reports for the same workorder where there is different information on each report (this does not refer to copies of the same report) unless required to meet regulatory needs and approved by QA.

Appendix 1. TestAmerica Ethics Policy CA-L-P-001

TESTAMERICA
ETHICS POLICY No. CA-L-P-001

Refer to CA-L-P-001 for complete policy.

TestAmerica
EMPLOYEE ETHICS STATEMENT

I understand that TestAmerica is committed to ensuring the highest standard of quality and integrity of the data and services provided to our clients. I have read the Ethics Policy of the Company.

- *With regard to the duties I perform and the data I report in connection with my employment at the Company, I agree that:*
- *I will not intentionally report data values that are inconsistent with the actual values observed or measured.*
- *I will not intentionally report the dates, times, sample or QC identifications, or method citations of data analyses that are not the actual dates, times, sample or QC identifications, or method citations.*
- *I will not intentionally misrepresent another individual's work as my own or represent my own work as someone else's.*
- *I will not intentionally misrepresent any data where data does not meet Method or QC requirements. If it is to be reported, I will report it with all appropriate notes and/or qualifiers; I shall not modify data (either sample or QC data) unless the modification can be technically justified through a measurable analytical process, such as one deemed acceptable to the laboratory's Standard Operating Procedures, Quality Assurance Manual or Technical Director. All such modifications must be clearly and thoroughly documented in the appropriate laboratory notebooks/worksheets and/or raw data and include my initials or signature and date.*
- *I shall not make false statements to, or seek to otherwise deceive, members of Management or their representatives, agents, or clients/customers. I will not, through acts of commission, omission, erasure, or destruction, improperly report measurement standards, quality control data, test results or conclusions.*
- *I shall not compare or disclose results for any Performance Testing (PT) sample, or other similar QA or QC requirements, with any employee of any other laboratory, including any other TestAmerica laboratory, prior to the required submission date of the results to the person, organization, or entity supplying the PT sample.*
- *I shall immediately inform my supervisor or other member of management regarding any intentional or unintentional reporting of my own inauthentic data. Such report shall be given both orally and in writing to the supervisor or other member of management contacted and to the local Quality Assurance Manager. The Quality Assurance Manager will initial and date the information and return a copy to me. I shall not condone any accidental or intentional reporting of inauthentic data by other employees and will immediately report its occurrence. If I have actual knowledge of such acts committed by any other employees, and I do not report such information to designated members of Management, it shall be considered as serious as if I personally committed the offense. Accordingly, in that event, I understand that I may be subject to immediate termination of employment.*

- *I understand that if any supervisor, manager, or representative of TestAmerica management instructs, requests, or directs me to perform any of the aforementioned improper laboratory practices, or if I am in doubt or uncertain as to whether or not such laboratory practices are proper, I will not comply. In fact, I must report such event to all appropriate members of Management including, but not limited to, the Lab Director, all supervisors and managers with direct line reporting relationship between me and the Lab Director, and the local Quality Assurance representative, excluding such individuals who participated in such perceived improper instruction, request, or directive. In addition, I may contact Corporate Quality Assurance / Ethics Compliance Officer(s) for assistance.*
- *I understand the critical importance of accurately reporting data, measurements, and results, whether initially requested by a client, or retained by TestAmerica and submitted to a client at a later date, or retained by TestAmerica for subsequent internal use;*
- *I will not share the pricing or cost data of Vendors or Suppliers with anyone outside of the TestAmerica family of companies.*
- *I shall not accept gifts of a value that would adversely influence judgment.*
- *I shall avoid conflicts of interest and report any potential conflicts to the management (e.g. employment or consulting with competitors, clients, or vendors).*
- *I shall not participate in unfair competition practices (e.g. slandering competitors, collusion with other labs to restrict others from bidding on projects).*
- *I shall not misrepresent certifications and status of certifications to clients or regulators.*
- *I shall not intentionally discharge wastes illegally down the drain or onto the ground.*
- *I understand that any attempt by management or an employee to circumvent these policies will be subject to disciplinary action.*

As a TestAmerica employee, I understand that I have the responsibility to conduct myself with integrity in accordance with the ethical standards described in the Ethics Policy. I will also report any information relating to possible kickbacks or violations of the Procurement Integrity Act, or other questionable conduct in the course of sales or purchasing activities. I will not knowingly participate in any such activity and will report any actual or suspected violation of this policy to management.

I understand that if my job includes supervisory responsibilities, I shall not instruct, request, or direct any subordinate to perform any laboratory practice which is unethical or improper. Also, I shall not discourage, intimidate, or inhibit an employee who may choose to appropriately appeal my supervisory instruction, request, or directive which the employee perceives to be improper, nor retaliate against those who do.

The Ethics Policy has been explained to me by my supervisor or at a training session, and I have had the opportunity to ask questions if I did not understand any part of it. I understand that any violation of this policy subjects me to disciplinary action, which can include termination of my employment. In addition, I understand that any violation of this policy which relates to work under a government contract or subcontract could also subject me to the potential for prosecution under federal law.

EMPLOYEE SIGNATURE _____ Date _____

Supervisor/Trainer: _____ Date _____

Work Instruction No. CA-WI-005

TestAmerica

CONFIDENTIALITY AND PROPRIETARY INFORMATION AGREEMENT

TestAmerica and their predecessors, in their businesses, have developed and use commercially valuable technical and non-technical information and to guard the legitimate interests of TestAmerica and its clients, it is necessary to protect certain information as confidential and proprietary.

I, _____ , understand and acknowledge that during the term of my employment by TestAmerica, I will be privy to and entrusted with certain confidential information and trade secrets of TestAmerica and its clients.

Confidential information and trade secrets include, but are not limited to: customer and client lists; price lists; marketing and sales strategies and procedures; operational and equipment techniques; standard operating procedures; business plans and systems; quality control procedures and systems; special projects and technological research, including projects, research and reports for any government entity or client; client's plans and processes; client's manner of operation; the trade secrets of clients; client's data; vendor or supplier pricing; employee lists and personal information, and any other records, data, files, drawings, inventions, discoveries, applications, or processes which are not in the public domain.

I agree as follows:

1. I will not in any way, during the term of my employment, or at any time thereafter, except as authorized in writing by the Legal Department of TestAmerica or the client where client data is involved, disclose to others, use for my own benefit, remove from TestAmerica's premises (except to the extent off-site work is approved by my supervisor), copy or make notes of any confidential information and/or trade secrets of TestAmerica or its clients, excepting only that information which may be public knowledge. Technical and business information of any previous employer or other third party which I may disclose to TestAmerica shall be limited to that which was acquired legitimately and disclosed to me without restriction as to secrecy.

2. I agree that all inventions (whether or not patentable) conceived or made by me during the period of my employment by TestAmerica shall belong to TestAmerica, provided such inventions grow out of my work for TestAmerica and are related to the business of TestAmerica. I agree to disclose and assign such inventions to TestAmerica. In California, this provision shall not apply to any invention which qualifies fully under Section 2870 of the California Labor Code.

3. On termination of my employment from TestAmerica, I will deliver to TestAmerica all documents, records, notes, data, memoranda, files, manuals, equipment and things of any nature which relate in any way to confidential information and/or trade secrets of TestAmerica or its clients and which are in my possession or under my control.

4. I agree that during the period of my employment and for one (1) year from and after the termination (for any reason) of my employment with TestAmerica, I shall not directly or indirectly (without first obtaining the written permission of TestAmerica), recruit for employment, or induce to terminate his or her employment with TestAmerica, any person who is an active employee of TestAmerica on the last day of my employment with TestAmerica.

5. I acknowledge that if I were to breach any provision of this Confidentiality Agreement, money damages will be inadequate, and I hereby agree that TestAmerica shall be entitled, where appropriate, to specific performance and/or injunctive relief (i.e. to require me to comply with this Agreement). I further acknowledge that the willingness of TestAmerica to hire me or to continue my employment constitutes full and adequate consideration for the agreements, and obligations to which I have agreed as set forth in this document.

I have executed this Agreement, intending to be legally bound.

_____	_____	_____
Printed Name	*Signature*	*Date*

Work Instruction No. CA-WI-006

Appendix 2.

Example Laboratory Organization Chart

(The most current chart can be obtained from the QA Manager or Lab Director/Manager)

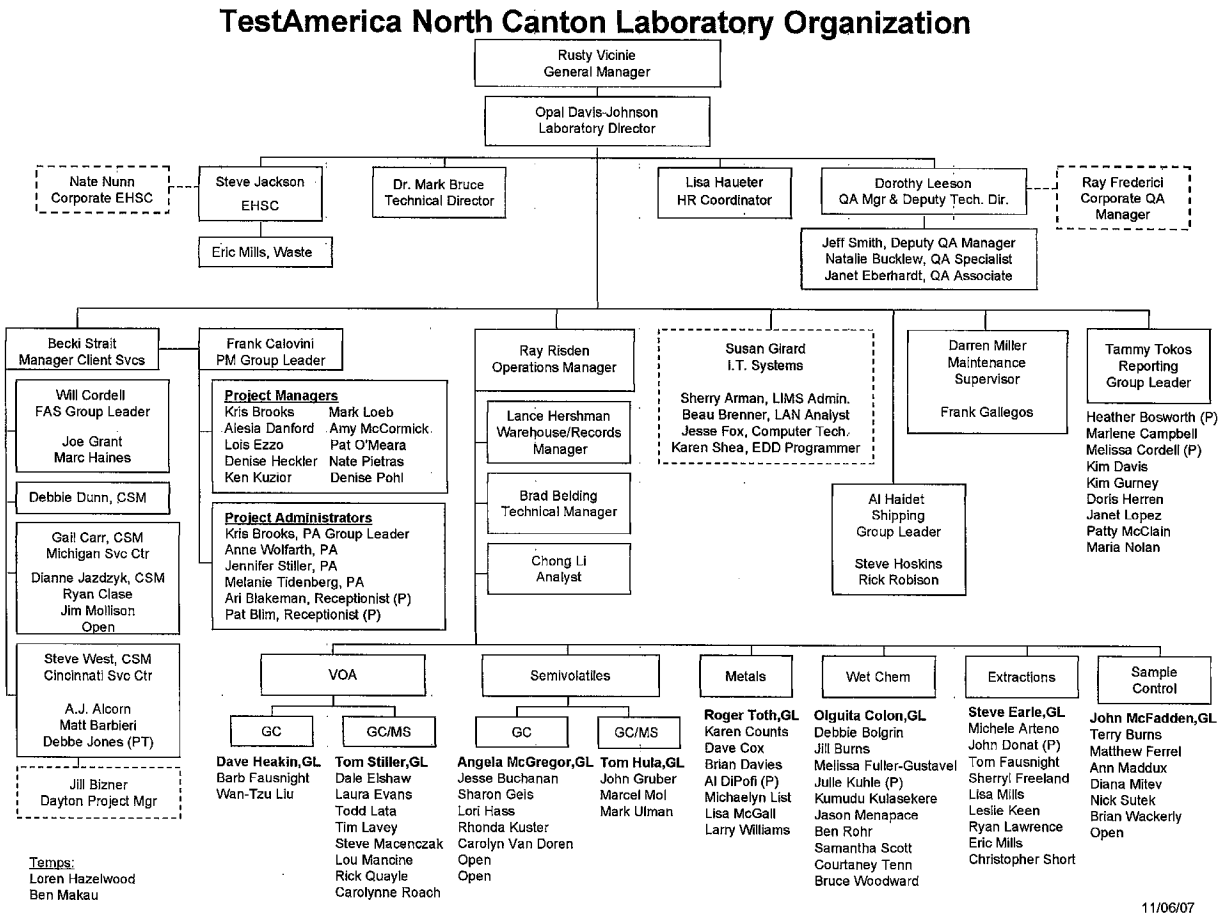

Appendix 3.

Laboratory Floor Plan

TestAmerica – North Canton

4101 Shuffel Dr NW
North Canton, OH 44720

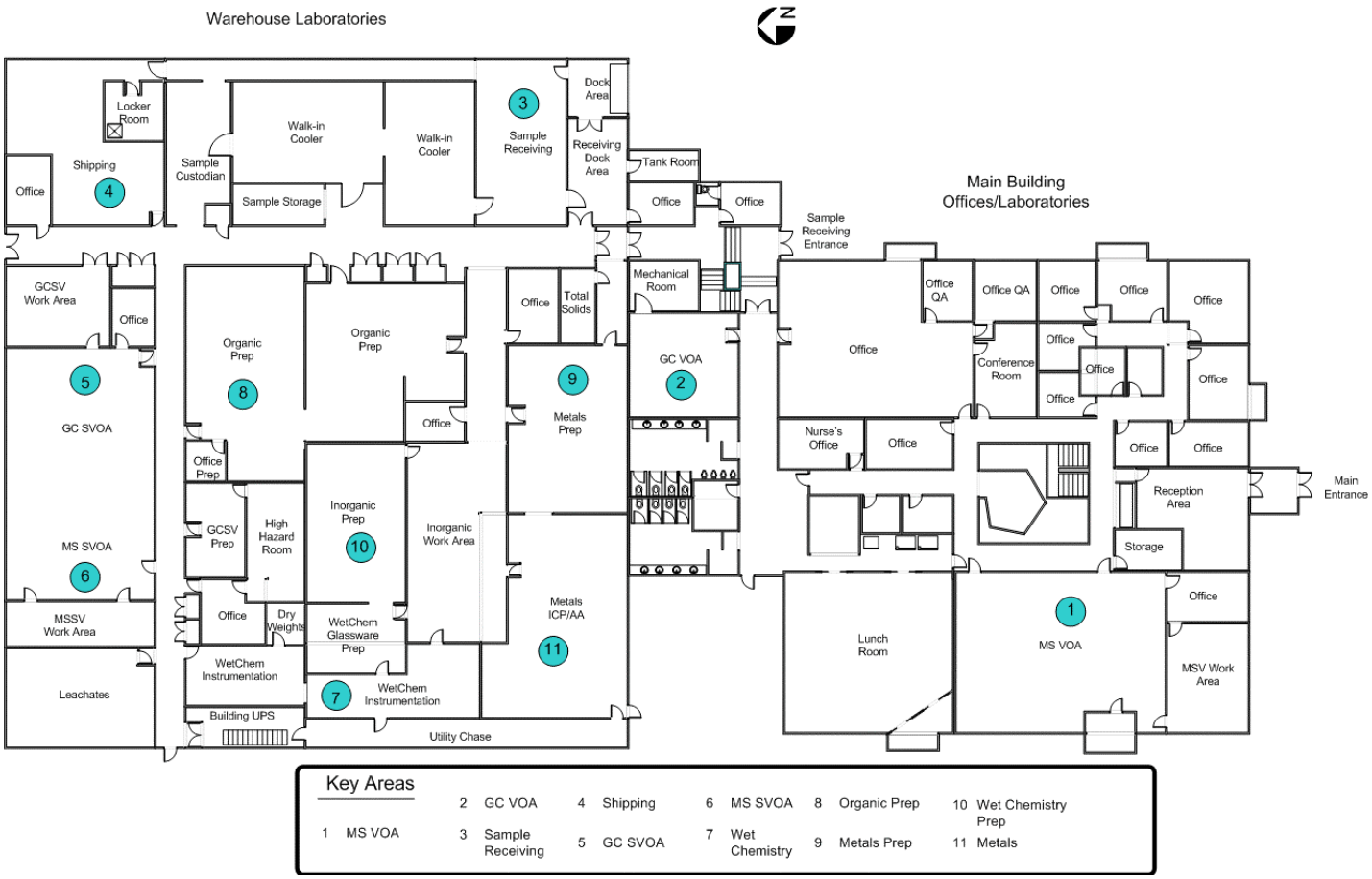

Appendix 4.

Laboratory Method Listing

Wet Chemistry Methods [1]

Analytical Parameters	Matrix		Fields of Testing		
			CWA	RCRA (SW846)	Other
Acidity	Water		305. [2] SM 2310 B	--	--
Alkalinity, Bicarbonate, Carbonate	Water		305. [2] SM 2320 B		
	Solid		EPA 310.1[2] (M)	--	--
Arsenic (ASV) Anodic Stripping Voltammetry	Water		--	EPA 7063	--
Ash Content	Solid		--	--	ASTM D29-74
Biochemical Oxygen Demand, Carbonaceous	Water		EPA 405.1 SM 5210 B	--	--
Bromide	Water		EPA 300.0A	EPA 9056A	--
	Waste		EPA 300.0A	EPA 9056A	--
	Solid		EPA 300.0A (M)	EPA 9056A	--
Cation-Exchange Capacity	Solid		--	EPA 9081	--
Chemical Oxygen Demand	Water		EPA 410.4 SM 5220D	--	--
	Waste		EPA 410.4	--	--
Chloride	Water		EPA 300.0A EPA 325.2[2]	EPA 9056A EPA 9251	EPA 325.2[2]
	Waste		EPA 300.0A	EPA 9056A	--
	Solid		EPA 300.0A (M)	EPA 9056A EPA 9251(M)	--
Chromium, Hexavalent	Water		EPA 3500-Cr-D	EPA 7196A	--
	Waste		EPA 3500-Cr-D	EPA 7196A	--
	Solid		--	EPA 3060A EPA 7196A	--

[1] Any matrix not listed is not applicable for the associated method
[2] Removed from 40CFR

Analytical Parameters	Matrix	Fields of Testing			
			CWA	RCRA (SW846)	Other
Specific Conductance	Water		EPA 120.1 SM 2510B	EPA 9050A	--
	Waste		EPA 120.1	EPA 9050A	--
	Solid		--	EPA 9050A	--
Chlorine, Residual	Water		EPA 330.5[2] SM 3500 CL-G	--	--
Cyanide (Amenable)	Water		EPA 335.1[2] SM 4500 CN-G	EPA 9012A	--
	Solid		--	EPA 9012A	--
Cyanide (Total)	Water		SM 4500-CN E EPA 335.4	EPA 9012A	---
	Waste		--	EPA 9012A	--
	Solid		--	EPA 9012A	--
Cyanide (Weak and Dissociable) (Free)	Water		SM 4500-CN I	--	--
Dissolved Oxygen	Water		360.1[2] SM 4500 O-G	--	--
Flash Point	Waste		--	EPA 1010	ASTM D93-9
	Solid		--	EPA 1010	ASTM D93-9
Fluoride	Water		EPA 300.0A EPA 340.2[2]	EPA 9056A	SM 4500 F-C, ISE
	Waste		EPA 340.2 (M)[2] EPA 300.0A (M)	EPA 9056A	--
	Solid		EPA 340.2 (M)[2] EPA 300.0A (M)	EPA 9056A	--
Iron, Ferrous & Ferric	Water		SM 3500 FE D	--	--
Hardness	Water		EPA 130.2[2]	--	SM 2340B
Moisture	Solid		---	EPA 160.3 (M) ASTM D2216-90	---
Nitrogen, Ammonia	Water		EPA 350.1	--	EPA 350.2[2]
	Waste		EPA 350.1	--	EPA 350.2[2]
	Solid		EPA 350.1	--	EPA 350.2[2]
	Water		SM 4500 NH_3-B (Distillation)	--	--
	Water		SM 4500 NH_3-E (Titration)	--	--
	Water		SM 4500 NH_3-F (ISE)	--	--

Analytical Parameters	Matrix	Fields of Testing		
		CWA	RCRA (SW846)	Other
Nitrite (NO_2)	Water	EPA 300.0A	EPA 9056A	--
	Waste	EPA 300.0A (M)	EPA 9056A	--
	Solid	EPA 300.0A (M)	EPA 9056A	--
Nitrate (NO_3)	Water	EPA 300.0A	EPA 9056A	SM 4500 NO_3-E
	Waste	EPA 300.0A (M)	EPA 9056A	--
	Solid	EPA 300.0A (M)	--	--
Nitrate plus Nitrite NO_2/NO_3	Water	EPA 353.2	--	--
	Waste	EPA 353.2	--	--
Total Kjeldahl Nitrogen (TKN)	Water	EPA 351.3	--	SM 4500 NO_3
	Waste	EPA 351.3	--	--
	Solid	EPA 351.3	--	--
Oil and Grease (Hexane Extractable Material)	Water	EPA 1664A	EPA 9071B	--
	Waste	EPA 1664A	EPA 9071B	--
	Solid	--	EPA 9071B	--
Ortho-phosphate o-PO_4	Water	EPA 300.0A EPA 365.1	EPA 9056A	SM 4500 P-E
	Waste	EPA 300.0A (M)	EPA 9056A	--
	Solid	EPA 300.0A (M) EPA 365.1	EPA 9056A	--
pH	Water	EPA 150.1[2]	EPA 9040B	EPA 9041
	Waste	SM 4500 H-B	EPA 9045C	--
	Solid	---	EPA 9045C	--
Paint Filter	Water	--	EPA 9095A	--
Phenolics	Water	EPA 420.1	--	--
	Waste	--	EPA 9065	--
	Solid	--	EPA 9065	--
Phosphorus (Total)	Water	EPA 365.1	--	SM 4500 P-E
	Waste	EPA 365.1	--	--
	Solid	EPA 365.1	--	--
Sulfate (SO_4)	Water	EPA 300.0A EPA 375.4[2]	EPA 9056A EPA 9038	--
	Waste	EPA 300.0A (M) EPA 375.4[2]	EPA 9056A EPA 9038	--
	Solid	EPA 300.0A (M)	EPA 9056A EPA 9038 (M)	--

Analytical Parameters	Matrix	Fields of Testing			
			CWA	RCRA	Other
Sulfide	Water		EPA 376.1[2]	EPA 9030A SM 4500	9030B/9034
Total Organic Carbon (TOC)	Water		EPA 415.1[2]	EPA 9060	SM 5310 D
	Waste		--	EPA 9060	--
	Solid		EPA 415.1 (M)	EPA 9060 (M)	Walkley-Black
Total Organic Halides (TOX)	Water		--	EPA 9020B EPA 9023(EOX)	EPA 450.1
	Waste		--	--	--
	Solid		--	EPA 9020B	--
Total Petroleum Hydrocarbons	Water		EPA 1664A (SGT-HEM)	EPA 9071B	--
	Waste		EPA 1664A (SGT-HEM)	EPA 9071B	--
	Solid		--	EPA 9071B	--
Total Solids	Water		EPA 160.3	--	--
	Waste		EPA 160.3	--	--
	Solid		EPA 160.3 (M)	--	--
Total Dissolved Solids	Water		EPA 160.1	--	2540E
Total Suspended Solids	Water		EPA 160.2	---	2540E
Volatile and Volatile Suspended Solids	Water		EPA 160.4	--	--
Settleable Solids	Water		EPA 160.5	--	--
Turbidity	Water		EPA 180.1	--	--

Methods for Mercury by Cold Vapor Atomic Absorption

Analytical Parameters	Matrix	Fields of Testing			
			CWA	RCRA (SW846)	Other
Mercury (CVAA)	Water		EPA 245.1	EPA 7470A	--
	TCLP Leachate		--	EPA 7470A	--
	Waste		--	EPA 7471A	--
	Solid		EPA 254.5	EPA 7471A	--

Methods for Mercury by Cold Vapor Atomic Fluororescence

Analytical Parameters	Matrix	Fields of Testing			
			CWA	RCRA (SW846)	Other
Mercury, Low Level (CVAFS)	Water		EPA 245.7	--	EPA 1631E

Methods for Metals by ICP and ICPMS

Analytical Parameters	Matrix		Fields of Testing		
			CWA	RCRA (SW846)	Other
Aluminum	Water		EPA 200.7 EPA 200.8	EPA 6010B EPA 6020	---
	Waste		---	EPA 6010B EPA 6020	---
	Solid		EPA 200.7 EPA 200.8	EPA 6010B EPA 6020	---
Antimony	Water		EPA 200.7 EPA 200.8	EPA 6010B EPA 6020	---
	Waste		---	EPA 6010B EPA 6020	---
	Solid		EPA 200.7 EPA 200.8	EPA 6010B EPA 6020	---
Arsenic	Water		EPA 200.7 EPA 200.8	EPA 6010B EPA 6020	---
	Waste		---	EPA 6010B EPA 6020	---
	Solid		EPA 200.7 EPA 200.8	EPA 6010B EPA 6020	---
Barium	Water		EPA 200.7 EPA 200.8	EPA 6010B EPA 6020	---
	Waste		---	EPA 6010B EPA 6020	---
	Solid		EPA 200.7 EPA 200.8	EPA 6010B EPA 6020	---
Beryllium	Water		EPA 200.7 EPA 200.8	EPA 6010B EPA 6020	---
	Waste		---	EPA 6010B EPA 6020	---
	Solid		EPA 200.7 EPA 200.8	EPA 6010B EPA 6020	---
Boron	Water		EPA 200.7	EPA 6010B	---
	Waste		---	EPA 6010B	---
	Solid		EPA 200.7	EPA 6010B	---
Calcium	Water		EPA 200.7	EPA 6010B	---
	Waste		---	EPA 6010B	---
	Solid		EPA 200.7	EPA 6010B	---

Analytical Parameters	Matrix	Fields of Testing			
			CWA	RCRA (SW846)	*Other*
Cadmium	Water		EPA 200.7 EPA 200.8	EPA 6010B EPA 6020	---
	Waste		---	EPA 6010B EPA 6020	---
	Solid		EPA 200.7 EPA 200.8	EPA 6010B EPA 6020	---
Cobalt	Water		EPA 200.7 EPA 200.8	EPA 6010B EPA 6020	---
	Waste		---	EPA 6010B EPA 6020	---
	Solid		EPA 200.7 EPA 200.8	EPA 6010B EPA 6020	---
Chromium	Water		EPA 200.7 EPA 200.8	EPA 6010B EPA 6020	---
	Waste		---	EPA 6010B EPA 6020	---
	Solid		EPA 200.7 EPA 200.8	EPA 6010B EPA 6020	---
Copper	Water		EPA 200.7 EPA 200.8	EPA 6010B EPA 6020	---
	Waste		---	EPA 6010B EPA 6020	---
	Solid		EPA 200.7 EPA 200.8	EPA 6010B EPA 6020	---
Iron	Water		EPA 200.7 EPA 200.8	EPA 6010B EPA 6020	
	Waste		---	EPA 6010B EPA 6020	---
	Solid		EPA 200.7 EPA 200.8	EPA 6010B EPA 6020	---
Lead	Water		EPA 200.7 EPA 200.8	EPA 6010B EPA 6020	---
	Waste		---	EPA 6010B EPA 6020	---
	Solid		EPA 200.7 EPA 200.8	EPA 6010B EPA 6020	---
Magnesium	Water		EPA 200.7	EPA 6010B EPA 6020	---
	Waste		---	EPA 6010B EPA 6020	---
	Solid		EPA 200.7	EPA 6010B EPA 6020	---

Analytical Parameters	Matrix	Fields of Testing			
			CWA	RCRA (SW846)	*Other*
Manganese	Water		EPA 200.7 EPA 200.8	EPA 6010B EPA 6020	---
	Waste		---	EPA 6010B EPA 6020	---
	Solid		EPA 200.7 EPA 200.8	EPA 6010B EPA 6020	---
Molybdenum	Water		EPA 200.7 EPA 200.8	EPA 6010B EPA 6020	---
	Waste		---	EPA 6010B EPA 6020	---
	Solid		EPA 200.7 EPA 200.8	EPA 6010B EPA 6020	---
Nickel	Water		EPA 200.7 EPA 200.8	EPA 6010B EPA 6020	---
	Waste		---	EPA 6010B EPA 6020	---
	Solid		EPA 200.7 EPA 200.8	EPA 6010B EPA 6020	---
Potassium	Water		EPA 200.7	EPA 6010B	---
	Waste		---	EPA 6010B	---
	Solid		---	EPA 6010B	---
Selenium	Water		EPA 200.7 EPA 200.8	EPA 6010B EPA 6020	---
	Waste		---	EPA 6010B EPA 6020	---
	Solid		EPA 200.7 EPA 200.8	EPA 6010B EPA 6020	---
Silver	Water		EPA 200.7 EPA 200.8	EPA 6010B EPA 6020	---
	Waste		---	EPA 6010B EPA 6020	---
	Solid		EPA 200.7 EPA 200.8	EPA 6010B EPA 6020	---
Sodium	Water		EPA 200.7	EPA 6010B	---
	Waste		---	EPA 6010B	---
	Solid		---	EPA 6010B	---
Tin	Water		EPA 200.7 EPA 200.8	EPA 6010B EPA 6020	---
	Waste		---	EPA 6010B EPA 6020	---
	Solid		EPA 200.7 EPA 200.8	EPA 6010B EPA 6020	---

Analytical Parameters	Matrix	Fields of Testing			
			CWA	RCRA (SW846)	Other
Thallium	Water		EPA 200.7 EPA 200.8	EPA 6010B EPA 6020	---
	Waste		---	EPA 6010B EPA 6020	---
	Solid		EPA 200.7 EPA 200.8	EPA 6010B EPA 6020	---
Titanium	Water		EPA 200.7	EPA 6010B	---
	Waste		---	EPA 6010B	---
	Solid		---	EPA 6010B	---
Vanadium	Water		EPA 200.7 EPA 200.8	EPA 6010B EPA 6020	---
	Waste		---	EPA 6010B EPA 6020	---
	Solid		---	EPA 6010B EPA 6020	---
Zinc	Water		EPA 200.7 EPA 200.8	EPA 6010B EPA 6020	---
	Waste		---	EPA 6010B EPA 6020	---
	Solid		EPA 200.7 EPA 200.8	EPA 6010B EPA 6020	---

Metals Sample Preparation Methods

Analytical Parameters	Matrix	Fields of Testing			
			CWA	RCRA (SW846)	Other
Toxicity Characteristic Leaching Procedure (TCLP)	Water		---	EPA 1311	---
	Waste		---	EPA 1311	---
	Solid		---	EPA 1311	---
ICP Metals	Water		EPA 200.7	EPA 3005A EPA 3010A	---
	TCLP Leachate		---	EPA 3010A	---
	Waste		---	EPA 3050B	---
	Solid		---	EPA 3050B	---
ICPMS Metals	Water		EPA 200.8	EPA 3010A	---
	TCLP		---	EPA 3010A	---
	Waste		---	EPA 3050B	---
	Solid		---	EPA 3050B	---
CVAA Mercury	Water		EPA 245.1	EPA 7470A	---
	TCLP Leachate		---	EPA 7470A	---
	Waste		---	EPA 7471A	---
	Solid		---	EPA 7471A	
CVAFS Mercury Low Level	Water		EPA 245.7	---	EPA 1631E

Organic Sample Preparation Methods

Analytical Parameters	Matrix	Fields of Testing			
			CWA	RCRA (SW846)	Other
Volatiles by GC/MS	Water		EPA 624	EPA 5030B	---
	Waste		---	EPA 5030B EPA 5035	---
	Solid		---	EPA 5035 EPA 5035A	---
Halogenated Volatiles by GC	Water		EPA 601	EPA 5030B	---
	Waste		---	EPA 5030B EPA 5035	---
	Solid		---	EPA 5035 EPA 5035A	---
Aromatic Volatiles by GC	Water		EPA 602	EPA 5030B	---
	Waste		---	EPA 5030B EPA 5035	---
	Solid		---	EPA 5035 EPA 5035A	---
Semivolatiles by GC/MS	Water		EPA 625	EPA 3510C EPA 3520C	---
	TCLP Leachate		---	EPA 3510C EPA 3520C	---
	Waste		---	EPA 3550B EPA 3540C EPA 3580A EPA 3541	---
	Solid		---	EPA 3550B EPA 3540C EPA 3541	---
Pesticides/PCBs by GC	Water		EPA 608	EPA 3510C EPA 3520C	---
	TCLP Leachate		---	EPA 3510C EPA 3520C	---
	Waste		---	EPA 3550B EPA 3540C EPA 3580A EPA 3541	---
	Solid		---	EPA 3550B EPA 3540C EPA 3541	---

Analytical Parameters	Matrix	Fields of Testing			
			CWA	RCRA (SW846)	Other
Herbicides by GC	Water		EPA 615	EPA 8151A	---
	Waste		---	EPA 8151A	---
	Solid		---	EPA 8151A	---
Total Petroleum Hydrocarbons (Gasoline Range) by GC	Water		---	EPA 5030B	WI GRO
	Waste		---	EPA 5030B EPA 5035	WI GRO
	Solid		---	EPA 5035 EPA 5035	WI GRO
Total Petroleum Hydrocarbons (Diesel Range) by GC	Water		---	EPA 3510C EPA 3520C	WI DRO
	TCLP Leachate		---	EPA 3510C EPA 3520C	---
	Waste		---	EPA 3550B EPA 3580A	WI DRO
	Solid		---	EPA 3550B	WI DRO

Organic Methods of Analysis

Analytical Parameters	Matrix	Fields of Testing			
			CWA	RCRA (SW846)	Other
Volatiles by GC/MS	Water		EPA 624	EPA 8260B	---
	Waste		---	EPA 8260B	---
	Solid		---	EPA 8260B	---
Halogenated Volatiles by GC	Water		EPA 601	EPA 8021B	---
	Waste		---	EPA 8021B	---
	Solid		---	EPA 8021B	---
Aromatic Volatiles by GC	Water		EPA 602	EPA 8021B	---
	Waste		---	EPA 8021B	---
	Solid		---	EPA 8021B	---
Semivolatiles by GC/MS	Water		EPA 625	EPA 8270C	
	Waste		---	EPA 8270C	---
	Solid		---	EPA 8270C	---
Pesticides/PCBs by GC	Water		EPA 608	Pesticides 8081A PCBs 8082	---
	TCLP Leachate		---	Pesticides 8081A PCBs 8082	---
	Waste		---	Pesticides 8081A PCBs 8082	---
	Solid		---	Pesticides 8081A PCBs 8082	---

Analytical Parameters	Matrix	Fields of Testing			
			CWA	RCRA (SW846)	Other
Phenoxyacid Herbicides by GC	Water		---	EPA 8151A	---
	TCLP Leachate		---	EPA 8151A	---
	Waste		---	EPA 8151A	---
	Solid		---	EPA 8151A	---
Gasoline Range Organics by GC	Water		---	EPA 8015B (M)	WI GRO
	Waste		---	EPA 8015B (M)	---
	Solid		---	EPA 8015B (M)	WI GRO
Total Petroleum Hydrocarbons (Diesel Range) by GC/FID	Water		---	EPA 8015B (M)	WI DRO
	Waste		---	EPA 8015B (M)	---
Dissolved Gases RSK-175	Water		---	---	SOP
Formaldehyde Carbonyl Compounds	Water		---	EPA 8315	---

Appendix 5.

Laboratory Reporting Limits

General Chemistry
Reporting Limits (RL), Method Reference

Test Method	Analyte	RL	Units
305.1/SM2310B	Acidity	5	mg/L
310.1/SM2320B	Alkalinity, Total	5	mg/L
7063	Arsenic Speciation	2	ug/L
300.0 **9056A**	Bromide Chloride Nitrate Fluoride Sulfate Ortho-Phosphate Nitrite	0.5 1 0.1 1 1 0.5 0.1	mg/L mg/L mg/L mg/L mg/L mg/L mg/L
405.1/SM5210B	Biochemical Oxygen Demand	2	mg/L
410.4/SM5220D	Chemical Oxygen Demand (COD)	10	mg/L
325.2/9251	Chloride, Automated	1	mg/L
330.5 **SM4500CL-G**	Chlorine, Total Residue	0.2	mg/L
9012A/335.2 **335.4** **SM4500CN-E**	Cyanide, Total	0.01	mg/L
340.2 **SM4500F-C, ISE**	Fluoride	0.1	mg/L
130.2/SM2340B	Hardness, as CaCO3	5	mg/L
1664A	n-Hexane Extractable Material n-Hexane Extractable Material, SGT	5 10	mg/L mg/L
7196A	Hexavalent Chromium	0.02	mg/L
3500 Cr D	Hexavalent Chromium	0.02	mg/L
353.2 **SM4500NO_3E**	Nitrite Nitrate Nitrate/Nitrite	0.1 0.1 0.1	mg/L mg/L mg/L
350.2 **SM4500NH_3-E,F**	Nitrogen, as Ammonia	1	mg/L

General Chemistry
Reporting Limits (RL), Method Reference

Test Method	Analyte	RL	Units
9065	Phenols, Total	0.02	mg/L
9045B, C SM4500H-B	pH (solid)	--	No Units
4500	Phosphorus as Orthophosphate	0.1	mg/L
365.2 365.1	Ortho-Phosphate Phosphorus, as ortho-Phosphate ortho-Phosphate, Dissolved	0.1 0.1 0.1	mg/L mg/L mg/L
120.1 SM2510B	Specific Conductance	1	umhos/cm
9050A	Specific Conductance	1	umhos/cm
160.1 **SM2540E**	Solids (Residue), Dissolved Filterable Solids, Total Dissolved	10 10	mg/L mg/L
375.4	Sulfate	5	mg/L
9038	Sulfate	5	mg/L
376.1	Sulfide, Total	1	mg/L
9030A	Sulfide, Total	1	mg/L
9030A	Sulfide, Acid-Insoluble	1	mg/L
351.3	Total Kjeldahl Nitrogen	3	mg/L
415.1 SM5310D	Total Organic Carbon	1	mg/L
9060	Total Organic Carbon	1	mg/L
9020B	Total Organic Halogens	30	ug/L
180.1	Turbidity	0.5	NTU

Metals – ICP, CVAA 6000, 7000, 200 Series Reporting Limits (RL), Method Reference [1, 2]

	Analyte	RL	Units
Trace Water	Antimony	0.01	mg/L
	Arsenic	0.01	mg/L
	Cadmium	0.002	mg/L
	Chromium	0.005	mg/L
	Cobalt	0.007	mg/L
	Lead	0.003	mg/L
	Molybdenum	0.01	mg/L
	Selenium	0.005	mg/L
	Silver	0.005	mg/L
	Thallium	0.01	mg/L
	Vanadium	0.007	mg/L
Trace Solid	Antimony	1	mg/kg
	Arsenic	1	mg/kg
	Cadmium	0.2	mg/kg
	Chromium	0.5	mg/kg
	Cobalt	5	mg/kg
	Lead	0.3	mg/kg
	Molybdenum	1	mg/kg
	Selenium	0.5	mg/kg
	Silver	0.5	mg/kg
	Thallium	1	mg/kg
	Vanadium	5	mg/kg
Water	Aluminum	0.2	mg/L
	Antimony	0.06	mg/L
	Arsenic	0.3	mg/L
	Barium	0.2	mg/L
	Beryllium	0.005	mg/L
	Boron	0.2	mg/L
	Cadmium	0.005	mg/L
	Calcium	5	mg/L
	Chromium	0.01	mg/L
	Cobalt	0.05	mg/L
	Copper	0.025	mg/L
	Iron	0.1	mg/L
	Lead	0.1	mg/L
	Magnesium	5	mg/L
	Manganese	0.015	mg/L
	Molybdenum	0.04	mg/L
	Nickel	0.04	mg/L
	Potassium	5	mg/L
	Selenium	0.25	mg/L
	Silver	0.01	mg/L
	Sodium	5	mg/L
	Thallium	0.2	mg/L
	Tin	0.1	mg/L
	Titanium	0.05	mg/L
	Vanadium	0.05	Mg/L
	Zinc	0.02	mg/L

TABLE 8.2-10-2
Metals – ICP, CVAA 6000, 7000, 200 Series
Reporting Limits (RL), Method Reference [1,2]

	Analyte	RL	Units
Solid	Aluminum	20	mg/kg
	Antimony	6	mg/kg
	Arsenic	30	mg/kg
	Barium	20	mg/kg
	Beryllium	0.5	mg/kg
	Boron	20	mg/kg
	Cadmium	0.5	mg/kg
	Calcium	500	mg/kg
	Chromium	1	mg/kg
	Cobalt	5	mg/kg
	Copper	2.5	mg/kg
	Iron	10	mg/kg
	Lead	10	mg/kg
	Magnesium	500	mg/kg
	Manganese	1.5	mg/kg
	Molybdenum	4	mg/kg
	Nickel	4	mg/kg
	Potassium	500	mg/kg
	Selenium	25	mg/kg
	Silver	1	mg/kg
	Sodium	500	mg/kg
	Thallium	200	mg/kg
	Tin	10	mg/kg
	Titanium	5	mg/kg
	Vanadium	5	mg/kg
	Zinc	2	mg/kg
Water	Mercury	0.0002	mg/L
Solid	Mercury	0.1	mg/kg

Metals – ICPMS, 6020
Reporting Limits (RL), Method Reference [1,2]

	Analyte	RL	Units
Water	Aluminum	50	ug/L
	Antimony	2	ug/L
	Arsenic	5	ug/L
	Barium	1	ug/L
	Beryllium	1	ug/L
	Cadmium	1	ug/L
	Chromium	2	ug/L
	Cobalt	1	ug/L
	Copper	2	ug/L
	Iron	20	ug/L
	Lead	1	ug/L
	Manganese	1	ug/L
	Molybdenum*	10	ug/L
	Nickel	2	ug/L
	Selenium*	5	ug/L
	Silver	1	ug/L
	Thallium	1	ug/L
	Tin*	10	ug/L
	Vanadium*	5	ug/L
	Zinc	10	Ug/L
*Molybdenum, Selenium, Tin, and Vanadium are not on the 6020 method list			
Solid	Antimony	0.2	mg/kg
	Arsenic	0.5	mg/kg
	Barium	0.1	mg/kg
	Beryllium	0.1	mg/kg
	Cadmium	0.1	mg/kg
	Chromium	0.2	mg/kg
	Cobalt	0.1	mg/kg
	Copper	0.2	mg/kg
	Lead	0.1	mg/kg
	Manganese	0.1	mg/kg
	Molybdenum*	0.2	mg/kg
	Nickel	0.1	mg/kg
	Selenium*	0.5	mg/kg
	Silver	0.1	mg/kg
	Thallium	0.1	mg/kg
	Tin*	1	mg/kg
	Vanadium*	0.5	mg/kg
	Zinc	1	mg/kg
*Molybdenum, Selenium, Tin, and Vanadium are not on the 6020 method list			

Metals – ICPMS, 200.8
Reporting Limits (RL), Method Reference [1,2]

	Analyte	RL	Units
Water	Aluminum	50	ug/L
	Antimony	2	ug/L
	Arsenic	5	ug/L
	Barium	1	ug/L
	Beryllium	1	ug/L
	Cadmium	1	ug/L
	Chromium	2	ug/L
	Cobalt	1	ug/L
	Copper	2	ug/L
	Iron	20	ug/L
	Lead	1	ug/L
	Manganese	1	ug/L
	Molybdenum	10	ug/L
	Nickel	2	ug/L
	Selenium	2	ug/L
	Silver	1	ug/L
	Thallium	1	ug/L
	Tin*	10	ug/L
	Vanadium	5	ug/L
	Zinc	10	ug/L

*Tin is not on the 200.8 method list

Metals – Low-Level Mercury, 1631E & 245.7
Reporting Limits (RL), Method Reference [1,2]

	Analyte	RL	Units
1631E Water	Mercury	0.5	ng/L
245.7 Water	Mercury	5	ng/L

MS Semivolatiles – Method 8270C
Reporting Limits (RL), Method Reference [1,2]

	Analyte	RL	Units
	Acenaphthene	10	ug/L
	Acenaphthylene	10	ug/L
	Anthracene	10	ug/L
	Benzo(a)anthracene	10	ug/L
	Benzo(b)fluoranthene	10	ug/L
	Benzo(k)fluoranthene	10	ug/L
	Benzo(ghi)perylene	10	ug/L
	Benzo(a)pyrene	10	ug/L
	Bis(2-chloroEthoxy)methane	10	ug/L
	bis(2-Chloroethyl) ether	10	ug/L
	bis(2-Ethylhexyl) phthalate	10	ug/L
	4-Bromophenyl phenyl ether	10	ug/L
	Butyl benzyl phthalate	10	ug/L
	Carbazole	10	ug/L
	4-Chloroaniline	10	ug/L
	4-Chloro-3-methylphenol	10	ug/L
	2-Chloronaphthalene	10	ug/L
	2-Chlorophenol	10	ug/L
	4-Chlorophenyl phenyl ether	10	ug/L
	Chrysene	10	ug/L
	Dibenz(a,h)anthracene	10	ug/L
	Dibenzofuran	10	ug/L
	Di-n-butyl phthalate	10	ug/L
Water	1,2-Dichlorobenzene	10	ug/L
	1,3-Dichlorobenzene	10	ug/L
	1,4-Dichlorobenzene	10	ug/L
	3,3'-Dichlorobenzidine	50	ug/L
	2,4-Dichlorophenol	10	ug/L
	Diethyl phthalate	10	ug/L
	2,4-Dimethylphenol	10	ug/L
	Dimethyl phthalate	10	ug/L
	4,6-Dinitro-2-methylphenol	50	ug/L
	2,4-Dinitrophenol	50	ug/L
	2,4-Dinitrotoluene	10	ug/L
	2,6-Dinitrotoluene	10	ug/L
	Di-n-octyl phthalate	10	ug/L
	Fluoranthene	10	ug/L
	Fluorene	10	ug/L
	Hexachlorobenzene	10	ug/L
	Hexachlorobutadiene	10	ug/L
	Hexachloro-cyclopentadiene	50	ug/L
	Hexachloroethane	10	ug/L
	Indeno(1,2,3-cd)pyrene	10	ug/L
	Isophorone	10	ug/L
	2-Methylnaphthalene	10	ug/L
	2-Methylphenol	10	ug/L
	4-Methylphenol	10	ug/L
	Naphthalene	10	ug/L
	2-Nitroaniline	50	ug/L

	Analyte	RL	Units
	3-Nitroaniline	50	ug/L
	4-Nitroaniline	50	ug/L
	Nitrobenzene	10	ug/L
	2-Nitrophenol	10	ug/L
	4-Nitrophenol	50	ug/L
	N-Nitrosodiphenylamine	10	ug/L
	N-Nitrosodi-n-propylamine	10	ug/L
	Pentachlorophenol	10	ug/L
	Phenanthrene	10	ug/L
	Phenol	10	ug/L
	2,2'-Oxybis(1-Chloropropane)	10	ug/L
	Pyrene	10	ug/L
	1,2,4-Trichlorobenzene	10	ug/L
	2,4,5-Trichlorophenol	10	ug/L
	2,4,6-Trichlorophenol	10	ug/L
Water Surrogates	2-Fluorobiphenyl		
	2-Fluorophenol		
	2,4,6-Tribromophenol		
	Nitrobenzene-d5		
	Phenol-d5		
	Terphenyl-d14		

MS Semivolatiles – Method 8270C
Reporting Limits (RL), Method Reference [1,2]

	Analyte	RL	Units
Solid	Acenaphthene	330	ug/kg
	Acenaphthylene	330	ug/kg
	Anthracene	330	ug/kg
	Benzo(a)anthracene	330	ug/kg
	Benzo(b)fluoranthene	330	ug/kg
	Benzo(k)fluoranthene	330	ug/kg
	Benzo(ghi)perylene	330	ug/kg
	Benzo(a)pyrene	330	ug/kg
	bis(2-Chloroethoxy)-methane	330	ug/kg
	bis(2-Chloroethyl) ether	330	ug/kg
	bis(2-Ethylhexyl) phthalate	330	ug/kg
	4-Bromophenyl phenyl ether	330	ug/kg
	Butyl benzyl phthalate	330	ug/kg
	Carbazole	330	ug/kg
	4-Chloroaniline	330	ug/kg
	4-Chloro-3-methylphenol	330	ug/kg
	2-Chloronaphthalene	330	ug/kg
	2-Chlorophenol	330	ug/kg
	4-Chlorophenyl phenyl ether	330	ug/kg
	Chrysene	330	ug/kg
	Dibenz(a,h)anthracene	330	ug/kg
	Dibenzofuran	330	ug/kg
	Di-n-butyl phthalate	330	ug/kg
	1,2-Dichlorobenzene	330	ug/kg
	1,3-Dichlorobenzene	330	ug/kg
	1,4-Dichlorobenzene	330	ug/kg
	3,3'-Dichlorobenzidine	1600	ug/kg
	2,4-Dichlorophenol	330	ug/kg
	Diethyl phthalate	330	ug/kg
	2,4-Dimethylphenol	330	ug/kg
	Dimethyl phthalate	330	ug/kg
	4,6-Dinitro-2-methylphenol	1600	ug/kg
	2,4-Dinitrophenol	1600	ug/kg
	2,4-Dinitrotoluene	330	ug/kg
	2,6-Dinitrotoluene	330	ug/kg
	Di-n-octyl phthalate	330	ug/kg
	Fluoranthene	330	ug/kg
	Fluorene	330	ug/kg
	Hexachlorobenzene	330	ug/kg
	Hexachlorobutadiene	330	ug/kg
	Hexachloro-cyclopentadiene	1600	ug/kg
	Hexachloroethane	330	ug/kg
	Indeno(1,2,3-cd)pyrene	330	ug/kg
	Isophorone	330	ug/kg
	2-Methylnaphthalene	330	ug/kg
	2-Methylphenol	330	ug/kg
	4-Methylphenol	330	ug/kg
	Naphthalene	330	ug/kg
	2-Nitroaniline	1600	ug/kg
	3-Nitroaniline	1600	ug/kg

	Analyte	RL	Units
	4-Nitroaniline	1600	ug/kg
	Nitrobenzene	330	ug/kg
	2-Nitrophenol	330	ug/kg
	4-Nitrophenol	1600	ug/kg
	N-Nitrosodiphenylamine	330	ug/kg
	N-Nitrosodi-n-propylamine	330	ug/kg
	Pentachlorophenol	330	ug/kg
	Phenanthrene	330	ug/kg
	Phenol	330	ug/kg
	2,2'-Oxybis(1-Chloropropane)	330	ug/kg
	Pyrene	330	ug/kg
	1,2,4-Trichlorobenzene	330	ug/kg
	2,4,5-Trichlorophenol	330	ug/kg
	2,4,6-Trichlorophenol	330	ug/kg
Solid Surrogates	2-Fluorobiphenyl		
	2-Fluorophenol		
	2,4,6-Tribromophenol		
	Nitrobenzene-d5		
	Phenol-d5		
	Terphenyl-d14		

MS Semivolatiles – Method 625
Reporting Limits (RL), Method Reference [1,2]

	Analyte	RL	Units
Water	Acenaphthene	10	ug/L
	Acenaphthylene	10	ug/L
	Anthracene	10	ug/L
	Benzo(a)anthracene	10	ug/L
	Benzo(b)fluoranthene	10	ug/L
	Benzo(k)fluoranthene	10	ug/L
	Benzo(ghi)perylene	10	ug/L
	Benzo(a)pyrene	10	ug/L
	bis(2-Chloroethoxy)-methane	10	ug/L
	bis(2-Chloroethyl) ether	10	ug/L
	bis(2-Chloroisopropyl) ether	10	ug/L
	bis(2-Ethylhexyl) phthalate	10	ug/L
	4-Bromophenyl phenyl ether	10	ug/L
	Butyl benzyl phthalate	10	ug/L
	4-Chloro-3-methylphenol	10	ug/L
	2-Chloronaphthalene	10	ug/L
	2-Chlorophenol	10	ug/L
	4-Chlorophenyl phenyl ether	10	ug/L
	Chrysene	10	ug/L
	Dibenz(a,h)anthracene	10	ug/L
	Di-n-butyl phthalate	10	ug/L
	1,2-Dichlorobenzene	10	ug/L
	1,3-Dichlorobenzene	10	ug/L
	1,4-Dichlorobenzene	10	ug/L
	3,3'-Dichlorobenzidine	10	ug/L
	2,4-Dichlorophenol	10	ug/L
	Diethyl phthalate	10	ug/L
	2,4-Dimethylphenol	10	ug/L
	Dimethyl phthalate	10	ug/L
	2-Methyl-4,6-dinitrophenol	50	ug/L
	2,4-Dinitrophenol	50	ug/L
	2,4-Dinitrotoluene	10	ug/L
	2,6-Dinitrotoluene	10	ug/L
	Di-n-octyl phthalate	10	ug/L
	Fluoranthene	10	ug/L
	Fluorene	10	ug/L
	Hexachlorobenzene	10	ug/L
	Hexachlorobutadiene	10	ug/L
	Hexachloroethane	10	ug/L
	Indeno(1,2,3-cd)pyrene	10	ug/L
	Isophorone	10	ug/L
	Naphthalene	10	ug/L
	Nitrobenzene	10	ug/L
	2-Nitrophenol	10	ug/L
	4-Nitrophenol	50	ug/L
	N-Nitrosodi-n-propylamine	10	ug/L
	Pentachlorophenol	10	ug/L
	Phenanthrene	10	ug/L
	Phenol	10	ug/L
	Pyrene	10	ug/L

	Analyte	RL	Units
	1,2,4-Trichlorobenzene	10	ug/L
	2,4,6-Trichlorophenol	10	ug/L
Water Surrogates	2-Fluorobiphenyl		
	2-Fluorophenol		
	2,4,6-Tribromophenol		
	Nitrobenzene-d5		
	Phenol-d5		
	Terphenyl-d14		

MS Volatiles – Method 8260B
Reporting Limits (RL), Method Reference [1,2]

	Analyte	RL	Units
Water 25 mL	Benzene	1	ug/L
	Bromobenzene	1	ug/L
	Bromochloromethane	1	ug/L
	Bromodichloromethane	1	ug/L
	Bromoform	1	ug/L
	Bromomethane	1	ug/L
	n-Butylbenzene	1	ug/L
	sec-Butylbenzene	1	ug/L
	tert-Butylbenzene	1	ug/L
	Carbon tetrachloride	1	ug/L
	Chlorobenzene	1	ug/L
	Chlorodibromomethane	1	ug/L
	Chloroethane	1	ug/L
	Chloroform	1	ug/L
	Chloromethane	1	ug/L
	2-Chlorotoluene	1	ug/L
	4-Chlorotoluene	1	ug/L
	1,2-Dibromo-3-chloropropane	2	ug/L
	1,2-Dibromoethane	1	ug/L
	Dibromomethane	1	ug/L
	1,2-Dichlorobenzene	1	ug/L
	1,3-Dichlorobenzene	1	ug/L
	1,4-Dichlorobenzene	1	ug/L
	Dichlorodifluoro-methane	1	ug/L
	1,1-Dichloroethane	1	ug/L
	1,2-Dichloroethane	1	ug/L
	cis-1,2-Dichloroethene	1	ug/L
	trans-1,2-Dichloroethene	1	ug/L
	1,1-Dichloroethene	1	ug/L
	1,2-Dichloropropane	1	ug/L
	1,3-Dichloropropane	1	ug/L
	2,2-Dichloropropane	1	ug/L
	1,1-Dichloropropene	1	ug/L
	Ethylbenzene	1	ug/L
	Hexachlorobutadiene	1	ug/L
	Isopropylbenzene	1	ug/L
	p-Isopropyltoluene	1	ug/L
	Methylene chloride	1	ug/L
	Naphthalene	1	ug/L
	n-Propylbenzene	1	ug/L
	Styrene	1	ug/L
	1,1,1,2-Tetrachloroethane	1	ug/L
	1,1,2,2-Tetrachloroethane	1	ug/L
	Tetrachloroethene	1	ug/L
	Toluene	1	ug/L
	1,2,3-Trichlorobenzene	1	ug/L
	1,2,4-Trichlorobenzene	1	ug/L
	1,1,1-Trichloroethane	1	ug/L
	1,1,2-Trichloroethane	1	ug/L

	Analyte	RL	Units
	Trichloroethene	1	ug/L
	Trichlorofluoromethane	1	ug/L
	1,2,3-Trichloropropane	1	ug/L
	1,2,4-Trimethylbenzene	1	ug/L
	1,3,5-Trimethylbenzene	1	ug/L
	Vinyl chloride	1	ug/L
	m-Xylene & p-Xylene	1	ug/L
	o-Xylene	1	ug/L
Water 25 mL Surrogates	4-Bromofluorobenzene		
	1,2-Dichloroethane-d4		
	Toluene-d8		
	Dibromofluoromethane		

MS Volatiles – Method 8260B
Reporting Limits (RL), Method Reference [1,2]

	Analyte	RL	Units
Water 5 mL	Benzene	5	ug/L
	Bromobenzene	5	ug/L
	Bromochloromethane	5	ug/L
	Bromodichloromethane	5	ug/L
	Bromoform	5	ug/L
	Bromomethane	5	ug/L
	n-Butylbenzene	5	ug/L
	sec-Butylbenzene	5	ug/L
	tert-Butylbenzene	5	ug/L
	Carbon tetrachloride	5	ug/L
	Chlorobenzene	5	ug/L
	Chlorodibromomethane	5	ug/L
	Chloroethane	5	ug/L
	Chloroform	5	ug/L
	Chloromethane	5	ug/L
	2-Chlorotoluene	5	ug/L
	4-Chlorotoluene	5	ug/L
	1,2-Dibromo-3-chloropropane	10	ug/L
	1,2-Dibromoethane	5	ug/L
	Dibromomethane	5	ug/L
	1,2-Dichlorobenzene	5	ug/L
	1,3-Dichlorobenzene	5	ug/L
	1,4-Dichlorobenzene	5	ug/L
	Dichlorodifluoro-methane	5	ug/L
	1,1-Dichloroethane	5	ug/L
	1,2-Dichloroethane	5	ug/L
	cis-1,2-Dichloroethene	5	ug/L
	trans-1,2-Dichloroethene	5	ug/L
	1,1-Dichloroethene	5	ug/L
	1,2-Dichloropropane	5	ug/L
	1,3-Dichloropropane	5	ug/L
	2,2-Dichloropropane	5	ug/L
	1,1-Dichloropropene	5	ug/L
	Ethylbenzene	5	ug/L
	Hexachlorobutadiene	5	ug/L
	Isopropylbenzene	5	ug/L
	p-Isopropyltoluene	5	ug/L
	Methylene chloride	5	ug/L
	Naphthalene	5	ug/L
	n-Propylbenzene	5	ug/L
	Styrene	5	ug/L
	1,1,1,2-Tetrachloroethane	5	ug/L
	1,1,2,2-Tetrachloroethane	5	ug/L
	Tetrachloroethene	5	ug/L
	Toluene	5	ug/L
	1,2,3-Trichlorobenzene	5	ug/L
	1,2,4-Trichlorobenzene	5	ug/L
	1,1,1-Trichloroethane	5	ug/L
	1,1,2-Trichloroethane	5	ug/L
	Trichloroethene	5	ug/L

	Analyte	RL	Units
	Trichlorofluoromethane	5	ug/L
	1,2,3-Trichloropropane	5	ug/L
	1,2,4-Trimethylbenzene	5	ug/L
	1,3,5-Trimethylbenzene	5	ug/L
	Vinyl chloride	5	ug/L
	m-Xylene & p-Xylene	10	ug/L
	o-Xylene	5	ug/L
Surrogates	4-Bromofluorobenzene		
	1,2-Dichloroethane-d4		
	Toluene-d8		
	Dibromofluoromethane		

MS Volatiles – Method 8260B
Reporting Limits (RL), Method Reference [1,2]

	Analyte	RL	Units
Encore	Benzene	250	ug/kg
	Bromobenzene	250	ug/kg
	Bromochloromethane	250	ug/kg
	Bromodichloromethane	250	ug/kg
	Bromoform	250	ug/kg
	Bromomethane	250	ug/kg
	n-Butylbenzene	250	ug/kg
	sec-Butylbenzene	250	ug/kg
	tert-Butylbenzene	250	ug/kg
	Carbon tetrachloride	250	ug/kg
	Chlorobenzene	250	ug/kg
	Chlorodibromomethane	250	ug/kg
	Chloroethane	250	ug/kg
	Chloroform	250	ug/kg
	Chloromethane	250	ug/kg
	2-Chlorotoluene	250	ug/kg
	4-Chlorotoluene	250	ug/kg
	1,2-Dibromo-3-chloropropane	500	ug/kg
	1,2-Dibromoethane	250	ug/kg
	Dibromomethane	250	ug/kg
	1,2-Dichlorobenzene	250	ug/kg
	1,3-Dichlorobenzene	250	ug/kg
	1,4-Dichlorobenzene	250	ug/kg
	Dichlorodifluoro-methane	250	ug/kg
	1,1-Dichloroethane	250	ug/kg
	1,2-Dichloroethane	250	ug/kg
	cis-1,2-Dichloroethene	250	ug/kg
	trans-1,2-Dichloroethene	250	ug/kg
	1,1-Dichloroethene	250	ug/kg
	1,2-Dichloropropane	250	ug/kg
	1,3-Dichloropropane	250	ug/kg
	2,2-Dichloropropane	250	ug/kg
	1,1-Dichloropropene	250	ug/kg
	Ethylbenzene	250	ug/kg
	Hexachlorobutadiene	250	ug/kg
	Isopropylbenzene	250	ug/kg
	p-Isopropyltoluene	250	ug/kg
	Methylene chloride	250	ug/kg
	Naphthalene	250	ug/kg
	n-Propylbenzene	250	ug/kg
	Styrene	250	ug/kg
	1,1,1,2-Tetrachloroethane	250	ug/kg
	1,1,2,2-Tetrachloroethane	250	ug/kg
	Tetrachloroethene	250	ug/kg
	Toluene	250	ug/kg
	1,2,3-Trichlorobenzene	250	ug/kg
	1,2,4-Trichlorobenzene	250	ug/kg
	1,1,1-Trichloroethane	250	ug/kg
	1,1,2-Trichloroethane	250	ug/kg

	Analyte	RL	Units
	Trichloroethene	250	ug/kg
	Trichlorofluoromethane	250	ug/kg
	1,2,3-Trichloropropane	250	ug/kg
	1,2,4-Trimethylbenzene	250	ug/kg
	1,3,5-Trimethylbenzene	250	ug/kg
	Vinyl chloride	250	ug/kg
	m-Xylene & p-Xylene	500	ug/kg
	o-Xylene	250	ug/kg
Surrogates	4-Bromofluorobenzene		
	1,2-Dichloroethane-d4		
	Toluene-d8		
	Dibromofluoromethane		

MS Volatiles – Method 8260B
Reporting Limits (RL), Method Reference [1,2]

	Analyte	RL	Units
Low Level Encore	Benzene	5	ug/kg
	Bromobenzene	5	ug/kg
	Bromochloromethane	5	ug/kg
	Bromodichloromethane	5	ug/kg
	Bromoform	5	ug/kg
	Bromomethane	5	ug/kg
	n-Butylbenzene	5	ug/kg
	sec-Butylbenzene	5	ug/kg
	tert-Butylbenzene	5	ug/kg
	Carbon tetrachloride	5	ug/kg
	Chlorobenzene	5	ug/kg
	Chlorodibromomethane	5	ug/kg
	Chloroethane	5	ug/kg
	Chloroform	5	ug/kg
	Chloromethane	5	ug/kg
	2-Chlorotoluene	5	ug/kg
	4-Chlorotoluene	5	ug/kg
	1,2-Dibromo-3-chloropropane	10	ug/kg
	1,2-Dibromoethane	5	ug/kg
	Dibromomethane	5	ug/kg
	1,2-Dichlorobenzene	5	ug/kg
	1,3-Dichlorobenzene	5	ug/kg
	1,4-Dichlorobenzene	5	ug/kg
	Dichlorodifluoro-methane	5	ug/kg
	1,1-Dichloroethane	5	ug/kg
	1,2-Dichloroethane	5	ug/kg
	cis-1,2-Dichloroethene	5	ug/kg
	trans-1,2-Dichloroethene	5	ug/kg
	1,1-Dichloroethene	5	ug/kg
	1,2-Dichloropropane	5	ug/kg
	1,3-Dichloropropane	5	ug/kg
	2,2-Dichloropropane	5	ug/kg
	1,1-Dichloropropene	5	ug/kg
	Ethylbenzene	5	ug/kg
	Hexachlorobutadiene	5	ug/kg
	Isopropylbenzene	5	ug/kg
	p-Isopropyltoluene	5	ug/kg
	Methylene chloride	5	ug/kg
	Naphthalene	5	ug/kg
	n-Propylbenzene	5	ug/kg
	Styrene	5	ug/kg
	1,1,1,2-Tetrachloroethane	5	ug/kg
	1,1,2,2-Tetrachloroethane	5	ug/kg
	Tetrachloroethene	5	ug/kg
	Toluene	5	ug/kg
	1,2,3-Trichlorobenzene	5	ug/kg
	1,2,4-Trichlorobenzene	5	ug/kg
	1,1,1-Trichloroethane	5	ug/kg
	1,1,2-Trichloroethane	5	ug/kg
	Trichloroethene	5	ug/kg

	Analyte	RL	Units
	Trichlorofluoromethane	5	ug/kg
	1,2,3-Trichloropropane	5	ug/kg
	1,2,4-Trimethylbenzene	5	ug/kg
	1,3,5-Trimethylbenzene	5	ug/kg
	Vinyl chloride	5	ug/kg
	m-Xylene & p-Xylene	10	ug/kg
	o-Xylene	5	ug/kg
Surrogates	4-Bromofluorobenzene		
	1,2-Dichloroethane-d4		
	Toluene-d8		
	Dibromofluoromethane		

MS Volatiles – Method 8260B
Reporting Limits (RL), Method Reference [1,2]

	Analyte	RL	Units
Frozen Encore	Benzene	5	ug/kg
	Bromobenzene	5	ug/kg
	Bromochloromethane	5	ug/kg
	Bromodichloromethane	5	ug/kg
	Bromoform	5	ug/kg
	Bromomethane	5	ug/kg
	n-Butylbenzene	5	ug/kg
	sec-Butylbenzene	5	ug/kg
	tert-Butylbenzene	5	ug/kg
	Carbon tetrachloride	5	ug/kg
	Chlorobenzene	5	ug/kg
	Chlorodibromomethane	5	ug/kg
	Chloroethane	5	ug/kg
	Chloroform	5	ug/kg
	Chloromethane	5	ug/kg
	2-Chlorotoluene	5	ug/kg
	4-Chlorotoluene	5	ug/kg
	1,2-Dibromo-3-chloropropane	10	ug/kg
	1,2-Dibromoethane	5	ug/kg
	Dibromomethane	5	ug/kg
	1,2-Dichlorobenzene	5	ug/kg
	1,3-Dichlorobenzene	5	ug/kg
	1,4-Dichlorobenzene	5	ug/kg
	Dichlorodifluoro-methane	5	ug/kg
	1,1-Dichloroethane	5	ug/kg
	1,2-Dichloroethane	5	ug/kg
	cis-1,2-Dichloroethene	5	ug/kg
	trans-1,2-Dichloroethene	5	ug/kg
	1,1-Dichloroethene	5	ug/kg
	1,2-Dichloropropane	5	ug/kg
	1,3-Dichloropropane	5	ug/kg
	2,2-Dichloropropane	5	ug/kg
	1,1-Dichloropropene	5	ug/kg
	Ethylbenzene	5	ug/kg
	Hexachlorobutadiene	5	ug/kg
	Isopropylbenzene	5	ug/kg
	p-Isopropyltoluene	5	ug/kg
	Methylene chloride	5	ug/kg
	Naphthalene	5	ug/kg
	n-Propylbenzene	5	ug/kg
	Styrene	5	ug/kg
	1,1,1,2-Tetrachloroethane	5	ug/kg
	1,1,2,2-Tetrachloroethane	5	ug/kg
	Tetrachloroethene	5	ug/kg
	Toluene	5	ug/kg
	1,2,3-Trichlorobenzene	5	ug/kg
	1,2,4-Trichlorobenzene	5	ug/kg
	1,1,1-Trichloroethane	5	ug/kg
	1,1,2-Trichloroethane	5	ug/kg
	Trichloroethene	5	ug/kg

	Analyte	RL	Units
	Trichlorofluoromethane	5	ug/kg
	1,2,3-Trichloropropane	5	ug/kg
	1,2,4-Trimethylbenzene	5	ug/kg
	1,3,5-Trimethylbenzene	5	ug/kg
	Vinyl chloride	5	ug/kg
	m-Xylene & p-Xylene	10	ug/kg
	o-Xylene	5	ug/kg
Surrogates	4-Bromofluorobenzene		
	1,2-Dichloroethane-d4		
	Toluene-d8		
	Dibromofluoromethane		

MS Volatiles – Method 624
Reporting Limits (RL), Method Reference [1,2]

	Analyte	RL	Units
Water	Benzene	5	ug/L
	Bromodichloro-methane	5	ug/L
	Bromoform	5	ug/L
	Bromomethane	55	ug/L
	Carbon tetrachloride	5	ug/L
	Chlorobenzene	5	ug/L
	Dibromochloro-methane	5	ug/L
	Chloroethane	5	ug/L
	2-Chloroethyl vinyl ether	--	ug/L
	Chloroform	5	ug/L
	Chloromethane	5	ug/L
	1,2-Dichlorobenzene	5	ug/L
	1,3-Dichlorobenzene	5	ug/L
	1,4-Dichlorobenzene	5	ug/L
	1,1-Dichloroethane	5	ug/L
	1,2-Dichloroethane	5	ug/L
	trans-1,2-Dichloroethene	5	ug/L
	1,1-Dichloroethene	5	ug/L
	1,2-Dichloropropane	5	ug/L
	cis-1,3-Dichloropropene	5	ug/L
	trans-1,3-Dichloropropene	5	ug/L
	Ethylbenzene	5	ug/L
	Methylene chloride	5	ug/L
	1,1,2,2-Tetrachloroethane	5	ug/L
	Tetrachloroethene	5	ug/L
	Toluene	5	ug/L
	1,1,1-Trichloroethane	5	ug/L
	1,1,2-Trichloroethane	5	ug/L
	Trichloroethene	5	ug/L
	Trichlorofluoro-methane	5	ug/L
	Vinyl chloride	5	ug/L
Surrogates	Bromofluorobenzene		
	1,2-Dichloro-ethane-d4		
	Toluene-d8		

GC Semivolatiles – Method 8081A
Reporting Limits (RL), Method Reference [1,2]

	Analyte	RL	Units
Water	Aldrin	0.05	ug/L
	alpha-BHC	0.05	ug/L
	beta-BHC	0.05	ug/L
	delta-BHC	0.05	ug/L
	gamma-BHC (Lindane)	0.05	ug/L
	alpha-Chlordane	0.05	ug/L
	gamma-Chlordane	0.05	ug/L
	4,4'-DDD	0.05	ug/L
	4,4'-DDE	0.05	ug/L
	4,4'-DDT	0.05	ug/L
	Dieldrin	0.05	ug/L
	Endosulfan I	0.05	ug/L
	Endosulfan II	0.05	ug/L
	Endosulfan sulfate	0.05	ug/L
	Endrin	0.05	ug/L
	Endrin aldehyde	0.05	ug/L
	Endrin ketone	0.05	ug/L
	Heptachlor	0.05	ug/L
	Heptachlor epoxide	0.05	ug/L
	Methoxychlor	0.1	ug/L
	Toxaphene	2	ug/L
Surrogates	Decachloro-biphenyl		
	Tetrachloro-m-xylene		

GC Semivolatiles – 8081A
Reporting Limits (RL), Method Reference [1,2]

	Analyte	RL	Units
Solid	Aldrin	1.7	ug/kg
	alpha-BHC	1.7	ug/kg
	beta-BHC	1.7	ug/kg
	delta-BHC	1.7	ug/kg
	gamma-BHC (Lindane)	1.7	ug/kg
	alpha-Chlordane	1.7	ug/kg
	gamma-Chlordane	1.7	ug/kg
	4,4'-DDD	1.7	ug/kg
	4,4'-DDE	1.7	ug/kg
	4,4'-DDT	1.7	ug/kg
	Dieldrin	1.7	ug/kg
	Endosulfan I	1.7	ug/kg
	Endosulfan II	1.7	ug/kg
	Endosulfan sulfate	1.7	ug/kg
	Endrin	1.7	ug/kg
	Endrin aldehyde	1.7	ug/kg
	Endrin ketone	1.7	ug/kg
	Heptachlor	1.7	ug/kg
	Heptachlor epoxide	1.7	ug/kg
	Methoxychlor	3.3	ug/kg
	Toxaphene	67	ug/kg
Surrogates	Decachloro-biphenyl		
	Tetrachloro-m-xylene		

GC Semivolatiles – Method 8082
Reporting Limits (RL), Method Reference [1,2]

	Analyte	RL	*Units*
Water	Aroclor 1016	1	ug/L
	Aroclor 1221	1	ug/L
	Aroclor 1232	1	ug/L
	Aroclor 1242	1	ug/L
	Aroclor 1248	1	ug/L
	Aroclor 1254	1	ug/L
	Aroclor 1260	1	ug/L
	Aroclor 1262	1	ug/L
	Aroclor 1268	1	ug/L
Surrogates	Decachlorobi-phenyl Tetrachloro-m-xylene		
Solid	Aroclor 1016	33	ug/kg
	Aroclor 1221	33	ug/kg
	Aroclor 1232	33	ug/kg
	Aroclor 1242	33	ug/kg
	Aroclor 1248	33	ug/kg
	Aroclor 1254	33	ug/kg
	Aroclor 1260	33	ug/kg
	Aroclor 1262	33	ug/kg
	Aroclor 1268	33	ug/kg
Surrogates	Decachloro-biphenyl Tetrachloro-m-xylene		

GC Semivolatiles – Method 608
Reporting Limits (RL), Method Reference [1,2]

	Analyte	RL	Units
Water	Aldrin	0.05	ug/L
	alpha-BHC	0.05	ug/L
	beta-BHC	0.05	ug/L
	delta-BHC	0.05	ug/L
	gamma-BHC (Lindane)	0.05	ug/L
	Chlordane (technical)	0.5	ug/L
	4,4'-DDD	0.05	ug/L
	4,4'-DDE	0.05	ug/L
	4,4'-DDT	0.05	ug/L
	Dieldrin	0.05	ug/L
	Endosulfan I	0.05	ug/L
	Endosulfan II	0.05	ug/L
	Endosulfan sulfate	0.05	ug/L
	Endrin	0.05	ug/L
	Endrin aldehyde	0.05	ug/L
	Heptachlor	0.05	ug/L
	Heptachlor epoxide	0.05	ug/L
	PCB-1016	1	ug/L
	PCB-1221	1	ug/L
	PCB-1232	1	ug/L
	PCB-1242	1	ug/L
	PCB-1248	1	ug/L
	PCB-1254	1	ug/L
	PCB-1260	1	ug/L
	Toxaphene	2	ug/L
Surrogates	Decachloro-biphenyl		
	Tetrachloro-m-xylene		

GC Semivolatiles – Method 8151A
Reporting Limits (RL), Method Reference [1,2]

	Analyte	RL	Units
Water	2,4-D	4	ug/L
	Dalapon	2	ug/L
	2,4-DB	4	ug/L
	Dicamba	2	ug/L
	Dichlorprop	4	ug/L
	Dinoseb	0.6	ug/L
	MCPA	400	ug/L
	MCPP	400	ug/L
	2,4,5-TP (Silvex)	1	ug/L
	2,4,5-T	1	ug/L
Surrogate	2,4-Dichlorophenylacetic acid		
Solid	2,4-D	80	ug/kg
	Dalapon	40	ug/kg
	2,4-DB	80	ug/kg
	Dicamba	40	ug/kg
	Dichlorprop	80	ug/kg
	Dinoseb	12	ug/kg
	MCPA	8000	ug/kg
	MCPP	8000	ug/kg
	2,4,5-TP (Silvex)	20	ug/kg
	2,4,5-T	20	ug/kg
Surrogate	2,4-Dichlorophenylacetic acid		

GC Volatiles - Method 8021B
Reporting Limits (RL), Method Reference [1,2]

	Analyte	RL	Units
Water 5 mL Purge	Benzene	1	ug/L
	Bromobenzene	1	ug/L
	Bromochloromethane	1	ug/L
	Bromodichloromethane	1	ug/L
	Bromoform	1	ug/L
	Bromomethane	1	ug/L
	n-Butylbenzene	1	ug/L
	sec-Butylbenzene	1	ug/L
	tert-Butylbenzene	1	ug/L
	Carbon tetrachloride	1	ug/L
	Chlorobenzene	1	ug/L
	Chlorodibromomethane	1	ug/L
	Chloroethane	1	ug/L
	Chloroform	1	ug/L
	Chloromethane	1	ug/L
	2-Chlorotoluene	1	ug/L
	4-Chlorotoluene	1	ug/L
	1,2-Dibromo-3-chloropropane (DBCP)	1	ug/L
	1,2-Dibromoethane (EDB)	1	ug/L
	Dibromomethane	1	ug/L
	1,2-Dichlorobenzene	1	ug/L
	1,3-Dichlorobenzene	1	ug/L
	1,4-Dichlorobenzene	1	ug/L
	Dichlorodifluoromethane	1	ug/L
	1,1-Dichloroethane	1	ug/L
	1,2-Dichloroethane	1	ug/L
	cis-1,2-Dichloroethene	1	ug/L
	trans-1,2-Dichloroethene	1	ug/L
	1,1-Dichloroethene	1	ug/L
	1,2-Dichloropropane	1	ug/L
	1,3-Dichloropropane	1	ug/L
	2,2-Dichloropropane	1	ug/L
	cis-1,3-Dichloropropene	1	ug/L
	trans-1,3-Dichloropropene	1	ug/L
	1,1-Dichloropropene	1	ug/L
	Ethylbenzene	1	ug/
	Hexachlorobutadiene	1	ug/L
	Isopropylbenzene	1	ug/L
	p-Isopropyltoluene	1	ug/L
	Methylene chloride	5	ug/L
	Naphthalene	1	ug/L
	n-Propylbenzene	1	ug/L
	Styrene	1	ug/L
	1,1,1,2-Tetrachloroethane	1	ug/L
	1,1,2,2-Tetrachloroethane	1	ug/L
	Tetrachloroethene	1	ug/L
	Toluene	1	ug/L
	1,2,3-Trichlorobenzene	1	ug/L
	1,2,4-Trichlorobenzene	1	ug/L

GC Volatiles - Method 8021B
Reporting Limits (RL), Method Reference [1,2]

	Analyte	RL	Units
	1,1,1-Trichloroethane	1	ug/L
	1,1,2-Trichloroethane	1	ug/L
	Trichloroethene	1	ug/L
	Trichlorofluoromethane	1	ug/L
	1,2,3-Trichloropropane	1	ug/L
	1,2,4-Trimethylbenzene	1	ug/L
	1,3,5-Trimethylbenzene	1	ug/L
	Vinyl chloride	1	ug/L
	m-Xylene & p-Xylene	2	ug/L
	o-Xylene	1	ug/L
	Xylenes (total)	3	ug/L
Surrogates	1,4-Dichlorobutane		
	Trifluorotoluene		

GC Volatiles - Method 8021B
Reporting Limits (RL), Method Reference [1,2]

	Analyte	RL	Units
Solid 5 g	Benzene	1	ug/kg
	Ethylbenzene	1	ug/kg
	Methyl tert-butyl ether (MTBE)	1	ug/kg
	Methyl tert-butyl ether	1	ug/kg
	Naphthalene	1	ug/kg
	Toluene	1	ug/kg
	1,2,4-Trimethylbenzene	1	ug/kg
	1,3,5-Trimethylbenzene	1	ug/kg
	m-Xylene & p-Xylene	2	ug/kg
	o-Xylene	1	ug/kg
	Xylenes (total)	3	ug/kg
Surrogates	Trifluorotoluene		

GC Volatiles – Method 8021B
Reporting Limits (RL), Method Reference [1,2]

	Analyte	RL	Units
Solid Encore, Methanol Prep	Benzene	50	ug/kg
	Ethylbenzene	50	ug/kg
	Methyl tert-butyl ether (MTBE)	50	ug/kg
	Naphthalene	250	ug/kg
	Toluene	50	ug/kg
	1,2,4-Trimethylbenzene	50	ug/kg
	1,3,5-Trimethylbenzene	50	ug/kg
	m-Xylene & p-Xylene	100	ug/kg
	o-Xylene	50	ug/kg
	Xylenes (total)	150	ug/kg
Surrogates	Trifluorotoluene		

GC Volatiles – Method 8021B
Reporting Limits (RL), Method Reference [1,2]

	Analyte	RL	Units
Frozen Encore	Benzene	1	ug/kg
	Ethylbenzene	1	ug/kg
	Methyl tert-butyl ether (MTBE)	1	ug/kg
	Methyl tert-butyl ether	1	ug/kg
	Naphthalene	1	ug/kg
	Toluene	1	ug/kg
	1,2,4-Trimethylbenzene	1	ug/kg
	1,3,5-Trimethylbenzene	1	ug/kg
	m-Xylene & p-Xylene	2	ug/kg
	o-Xylene	1	ug/kg
	Xylenes (total)	3	ug/kg
Surrogates	Trifluorotoluene		

GC Volatiles – Method 601
Reporting Limits (RL), Method Reference [1,2]

	Analyte	RL	Units
Water	Bromodichloromethane	1	ug/L
	Bromoform	1	ug/L
	Bromomethane	1	ug/L
	Carbon tetrachloride	1	ug/L
	Chlorobenzene	1	ug/L
	Dibromochloromethane	1	ug/L
	Chloroethane	1	ug/L
	2-Chloroethyl vinyl ether	5	ug/L
	Chloroform	1	ug/L
	Chloromethane	1	ug/L
	1,2-Dichlorobenzene	1	ug/L
	1,3-Dichlorobenzene	1	ug/L
	1,4-Dichlorobenzene	1	ug/L
	Dichlorodifluoromethane	1	ug/L
	1,1-Dichloroethane	1	ug/L
	1,2-Dichloroethane	1	ug/L
	trans-1,2-Dichloroethene	1	ug/L
	1,1-Dichloroethene	1	ug/L
	1,2-Dichloropropane	1	ug/L
	cis-1,3-Dichloropropene	1	ug/L
	trans-1,3-Dichloropropene	1	ug/L
	Methylene chloride	5	ug/L
	1,1,2,2-Tetrachloroethane	1	ug/L
	Tetrachloroethene	1	ug/L
	1,1,1-Trichloroethane	1	ug/L
	1,1,2-Trichloroethane	1	ug/L
	Trichloroethene	1	ug/L
	Trichlorofluoromethane	1	ug/L
	Vinyl chloride	1	ug/L
Surrogates	1,4-Dichlorobutane		

GC Volatiles – Method 602
Reporting Limits (RL), Method Reference [1,2]

	Analyte	RL	Units
Water	Benzene	1	ug/L
	Chlorobenzene	1	ug/L
	1,2-Dichlorobenzene	1	ug/L
	1,3-Dichlorobenzene	1	ug/L
	1,4-Dichlorobenzene	1	ug/L
	Ethylbenzene	1	ug/L
	Toluene	1	ug/L
Surrogates	Trifluorotoluene		

Total Petroleum Hydrocarbons, Diesel & Gasoline Range Organics Reporting Limits (RL), Method Reference [1,2]

	Analyte	RL	Units
Diesel Range Organics - Water	TPH (as Diesel)	100	ug/L
Surrogate	C9 (nonane)		
Diesel Range Organics - Solid	TPH (as Diesel)	10	mg/kg
Surrogate	C9 (nonane)		
Gasoline Range Organics - Water	Gasoline Range Organics TPH (as Gasoline) TPH (Purgeables)	100 100 100	ug/L ug/L ug/L
Gasoline Range Organics - Solid	Gasoline Range Organics TPH (as Gasoline) TPH (Purgeables)	100 100 100	ug/kg ug/kg ug/kg
Surrogate	TFT		
Gasoline Range Organics – Medium Level	TPH (as Gasoline) Solid TPH (as Gasoline) TPH (Purgeables)	1000 1000 1000	ug/kg ug/kg ug/kg
Surrogate	TFT		

Footnote:

[1] The latest MDLs, RLs, and Control Limits will be utilized at the time of sample analysis, and are available upon request.

[2] The compounds listed represent TAL/TCL compounds. Project specific or other regulatory lists may be available upon request.

Appendix 6. Glossary/Acronyms

Glossary

Acceptance Criteria:
Specified limits placed on characteristics of an item, process, or service defined in requirement documents. (ASQC)

Accreditation:
The process by which an agency or organization evaluates and recognizes a laboratory as meeting certain predetermined qualifications or standards, thereby accrediting the laboratory. In the context of the National Environmental Laboratory Accreditation Program (NELAP), this process is a voluntary one. (NELAC)

Accrediting Authority:
The Territorial, State, or Federal Agency having responsibility and accountability for environmental laboratory accreditation and which grants accreditation (NELAC) [1.5.2.3]

Accuracy:
The degree of agreement between an observed value and an accepted reference value. Accuracy includes a combination of random error (precision) and systematic error (bias) components which are due to sampling and analytical operations; a data quality indicator. (QAMS)

Analyst:
The designated individual who performs the “hands-on” analytical methods and associated techniques and who is the one responsible for applying required laboratory practices and other pertinent quality controls to meet the required level of quality. (NELAC)

Assessment:
The evaluation process used to measure or establish the performance, effectiveness, and conformance of an organization and/or its systems to defined criteria (to the standards and requirements of NELAC). (NELAC)

Assessment Criteria:
The measures established by NELAC and applied in establishing the extent to which an applicant is in conformance with NELAC requirements. (NELAC)

Assessment Team:
The group of people authorized to perform the on-site inspection and proficiency testing data evaluation required to establish whether an applicant meets the criteria for NELAP accreditation. (NELAC)

Assessor:
One who performs on-site assessments of accrediting authorities and laboratories’ capability and capacity for meeting NELAC requirements by examining the records and other physical evidence for each one of the tests for which accreditation has been requested. (NELAC)

Audit:
A systematic evaluation to determine the conformance to quantitative and qualitative specifications of some operational function or activity. (EPA-QAD)

Batch:
Environmental samples which are prepared and/or analyzed together with the same process and personnel, using the same lot(s) of reagents. A preparation batch is composed of one to 20 environmental samples of the same matrix, meeting the above mentioned criteria and with a maximum time between the start of processing of the first and last sample in the batch to be 24 hours. An analytical batch is composed of prepared environmental samples (extracts, digestates or concentrates) and /or those samples not requiring preparation, which are analyzed together as a group using the same calibration curve or factor. An analytical batch can include samples originating from various environmental matrices and can exceed 20 samples. (NELAC Quality Systems Committee)

Blank:
A sample that has not been exposed to the analyzed sample stream in order to monitor contamination during sampling, transport, storage or analysis. The blank is subjected to the usual analytical and measurement process to establish a zero baseline or background value and is sometimes used to adjust or correct routine analytical results. (ASQC)

Blind Sample:
A sample for analysis with a composition known to the submitter. The analyst/laboratory may know the identity of the sample but not its composition. It is used to test the analyst's or laboratory's proficiency in the execution of the measurement process.

Calibration:
To determine, by measurement or comparison with a standard, the correct value of each scale reading on a meter, instrument, or other device. The levels of the applied calibration standard should bracket the range of planned or expected sample measurements. (NELAC)

Calibration Curve:
The graphical relationship between the known values, such as concentrations, of a series of calibration standards and their instrument response. (NELAC)

Calibration Method:
A defined technical procedure for performing a calibration. (NELAC)

Calibration Standard:
A substance or reference material used to calibrate an instrument (QAMS)

Certified Reference Material (CRM):
A reference material one or more of whose property values are certified by a technically valid procedure, accompanied by or traceable to a certificate or other documentation which is issued by a certifying body. (ISO Guide 30–2.2)

Chain-of-Custody:
An unbroken trail of accountability that ensures the physical security of samples and includes the signatures of all who handle the samples. (NELAC) [5.12.4]

Clean Air Act:
The enabling legislation in 42 U>S>C> 7401 et seq., Public Law 91-604, 84 Stat. 1676 Pub. L. 95-95, 91 Stat., 685 and Pub. L. 95-190, 91 Stat., 1399, as amended, empowering EPA to promulgate air quality standards, monitor and enforce them. (NELAC)

Comprehensive Environmental Response, Compensation and Liability Act (CERCLA/SUPERFUND):
The enabling legislation in 42 U.S.C. 9601-9675 et seq., as amended by the Superfund Amendments and Reauthorization Act of 1986 (SARA), 42 U.S.C. 9601 et seq., to eliminate the health and environmental threats posed by hazardous waste sites. (NELAC)

Compromised Samples:
Those samples which are improperly sampled, insufficiently documented (chain of custody and other sample records and/or labels), improperly preserved, collected in improper containers, or exceeding holding times when delivered to a laboratory. Under normal conditions, compromised samples are not analyzed. If emergency situation require analysis, the results must be appropriately qualified. (NELAC)

Confidential Business Information (CBI):
Information that an organization designates as having the potential of providing a competitor with inappropriate insight into its management, operation or products. NELAC and its representatives agree to safeguarding identified CBI and to maintain all information identified as such in full confidentiality.

Confirmation:
Verification of the identity of a component through the use of an approach with a different scientific principle from the original method. These may include, but are not limited to:

Second column confirmation
Alternate wavelength
Derivatization
Mass spectral interpretation
Alternative detectors or
Additional Cleanup procedures
(NELAC)

Conformance:
An affirmative indication or judgment that a product or service has met the requirements of the relevant specifications, contract, or regulation; also the state of meeting the requirements. (ANSI/ASQC E4-1994)

Corrective Action:
The action taken to eliminate the causes of an existing nonconformity, defect or other undesirable situation in order to prevent recurrence. (ISO 8402)

Data Audit:
A qualitative and quantitative evaluation of the documentation and procedures associated with environmental measurements to verify that the resulting data re of acceptable quality (i.e., that they meet specified acceptance criteria). (NELAC)

Data Reduction:
The process of transforming raw data by arithmetic or statistical calculations, standard curves, concentration factors, etc., and collation into a more useable form. (EPA-QAD)

Deficiency:
An unauthorized deviation from acceptable procedures or practices, or a defect in an item. (ASQC)

Detection Limit:
The lowest concentration or amount of the target analyte that can be identified, measured, and reported with confidence that the analyte concentration is not a false positive value. See Method Detection Limit. (NELAC)

Document Control:
The act of ensuring that documents (and revisions thereto) are proposed, reviewed for accuracy, approved for release by authorized personnel, distributed properly, and controlled to ensure use of the correct version at the location where the prescribed activity if performed. (ASQC)

Duplicate Analyses:
The analyses or measurements of the variable of interest performed identically on two subsamples of the same sample. The results from duplicate analyses are used to evaluate analytical or measurement precision but not the precision of sampling, preservation or storage internal to the laboratory. (EPA-QAD)

Environmental Detection Limit (EDL):
The smallest level at which a radionuclide in an environmental medium can be unambiguously distinguished for a given confidence interval using a particular combination of sampling and measurement procedures, sample size, analytical detection limit, and processing procedure. The EDL shall be specified for the 0.95 or greater confidence interval. The EDL shall be established initially and verified annually for each test method and sample matrix. (NELAC Radioanalysis Subcommittee)

Equipment Blank:
Sample of analyte-free media which has been used to rinse common sampling equipment to check effectiveness of decontamination procedures. (NELAC)

External Standard Calibration:
Calibrations for methods that do not utilize internal standards to compensate for changes in instrument conditions.

Federal Insecticide, Fungicide and Rodenticide Act (FIFRA):
The enabling legislation under 7 U.S.C. 135 et seq., as amended, that empowers the EPA to register insecticides, fungicides, and rodenticides. (NELAC)

Federal Water Pollution Control Act (Clean Water Act, CWA):
The enabling legislation under 33 U.S.C. 1251 et seq., Public Law 92-50086 Stat 816, that empowers EPA to set discharge limitations, write discharge permits, monitor, and bring enforcement action for non-compliance. (NELAC)

Company Confidential & Proprietary

Field Blank:
Blank prepared in the field by filing a clean container with pure de-ionized water and appropriate preservative, if any, for the specific sampling activity being undertaken (EPA OSWER)

Field of Testing:
NELAC's approach to accrediting laboratories by program, method and analyte. Laboratories requesting accreditation for a program-method-analyte combination or for an up-dated/improved method are required to submit to only that portion of the accreditation process not previously addressed (see NELAC, section 1.9ff). (NELAC)

Finding:
An assessment conclusion that identifies a condition having a significant effect on an item or activity. As assessment finding is normally a deficiency and is normally accompanied by specific examples of the observed condition. (NELAC)

Holding Times (Maximum Allowable Holding Times):
The maximum times that samples may be held prior to analyses and still be considered valid or not compromised. (40 CFR Part 136)

Inspection:
An activity such as measuring, examining, testing, or gauging one or more characteristics of an entity and comparing the results with specified requirements in order to establish whether conformance is achieved for each characteristic. (ANSI/ASQC E4-1994)

Internal Standard:
A known amount of standard added to a test portion of a sample and carried through the entire measurement process as a reference for evaluating and controlling the precision and bias of the applied analytical test method. (NELAC)

Internal Standard Calibration:
Calibrations for methods that utilize internal standards to compensate for changes in instrument conditions.

Instrument Blank:
A clean sample (e.g., distilled water) processed through the instrumental steps of the measurement process; used to determine instrument contamination. (EPA-QAD)

Instrument Response:
Instrument response is normally expressed as either peak area or peak height however it may also reflect a numerical representation of some type of count on a detector (e.g. Photomultiplier tube, or Diode array detector) and is used in this document to represent all types.

Laboratory:
A defined facility performing environmental analyses in a controlled and scientific manner. (NELAC)

Laboratory Control Sample (however named, such as laboratory fortified blank, spiked blank, or QC check sample):
A sample matrix, free from the analytes of interest, spiked with verified known amounts of analytes or a material containing known and verified amounts of analytes, taken through all preparation and analysis steps. Where there is no preparation taken for an analysis (such as in aqueous volatiles), or when all samples and standards undergo the same preparation and analysis process (such as Phosphorus), there is no LCS. It is generally used to establish intra-laboratory or analyst specific precision and bias or to assess the performance of all or a portion of the measurement system.

An LCS shall be prepared at a minimum of 1 per batch of 20 or less samples per matrix type per sample extraction or preparation method except for analytes for which spiking solutions are not available such as total suspended solids, total dissolved solids, total volatile solids, total solids, pH, color, odor, temperature, dissolved oxygen or turbidity. The results of these samples shall be used to determine batch acceptance.

Note: NELAC standards allow a matrix spike to be used in place of this control as long as the acceptance criteria are as stringent as for the LCS. (NELAC)

Laboratory Duplicate:
Aliquots of a sample taken from the same container under laboratory conditions and processed and analyzed independently. (NELAC)

Least Squares Regression (1st Order Curve):
The least squares regression is a mathematical calculation of a straight line over two axes. The y axis represents the instrument response (or Response ratio) of a standard or sample and the x axis represents the concentration. The regression calculation will generate a correlation coefficient (r) that is a measure of the "goodness of fit" of the regression line to the data. A value of 1.00 indicates a perfect fit. In order to be used for quantitative purposes, r must be greater than or equal to 0.99 for organics and 0.995 for inorganics.

Limit of Detection (LOD):
An estimate of the minimum amount of a substance that an analytical process can reliably detect. An LOD is analyte- and matrix-specific and may be laboratory dependent. (Analytical Chemistry, 55, p.2217, December 1983, modified) See also Method Detection Limit.

Manager (however named):
The individual designed as being responsible for the overall operation, all personnel, and the physical plant of the environmental laboratory. A supervisor may report to the manager. In some cases, the supervisor and the manager may be the same individual. (NELAC)

Matrix:
The component or substrate that contains the analyte of interest. For purposes of batch and QC requirement determinations, the following matrix distinctions shall be used:

> Aqueous: Any aqueous sample excluded from the definition of Drinking Water matrix or Saline/Estuarine source. Includes surface water, groundwater, effluents, and TCLP or other extracts.

Drinking Water: any aqueous sample that has been designated as a potable or potential potable water source.

Saline/Estuarine: any aqueous sample from an ocean or estuary, or other salt water source such as the Great Salt Lake.

Non-aqueous Liquid: any organic liquid with ,15% settleable solids.

Biological Tissue: any sample of a biological origin such as fish tissue, shellfish, or plant material. Such samples shall be grouped according to origin.

Solids: includes soils, sediments, sludges, and other matrices with .15% settleable solids.

Chemical Waste: a product or by-product of an industrial process that results in a matrix not previously defined.

Air: whole gas or vapor samples including those contained in flexible or rigid wall containers and the extracted concentrated analytes of interest from a gas or vapor that are collected with a sorbant tube, impinger solution, filter, or other device. (NELAC)

Matrix Spike (spiked sample or fortified sample):
Prepared by adding a known mass of target analyte to a specified amount of matrix sample for which an independent estimate of target analyte concentration is available. Matrix spikes are used, for example, to determine the effect of the matrix on a method's recovery efficiency.

Matrix spikes shall be performed at a frequency of one in 20 samples per matrix type per sample extraction or preparation method except for analytes for which spiking solutions are not available such as, total suspended solids, total dissolved solids, total volatile solids, total solids, pH, color, odor, temperature, dissolved oxygen or turbidity. The selected sample(s) shall be rotated among client samples so that various matrix problems may be noted and/or addressed. Poor performance in a matrix spike may indicate a problem with the sample composition and shall be reported to the client whose sample was used for the spike. (QAMS)

Matrix Spike Duplicate (spiked sample or fortified sample duplicate):
A second replicate matrix spike is prepared in the laboratory and analyzed to obtain a measure of the precision of the recovery for each analyte.

Matrix spike duplicates or laboratory duplicates shall be analyzed at a minimum of 1 in 20 samples per matrix type per sample extraction or preparation method. The laboratory shall document their procedure to select the use of an appropriate type of duplicate. The selected sample(s) shall be rotated among client samples so that various matrix problems may be noted and/or addressed. Poor performance in the duplicates may indicate a problem with the sample composition and shall be reported to the client whose sample was used for the duplicate. (QAMS)

Method Blank:
A sample of a matrix similar to the batch of associated samples (when available) that is free from the analytes of interest and is processed simultaneously with and under the same

conditions as samples through all steps of the analytical procedures, and in which no target analytes or interferences are present at concentrations that impact the analytical results for sample analyses. (NELAC)

Method Detection Limit:
The minimum concentration of a substance (an analyte) that can be measured and reported with 99% confidence that the analyte concentration is greater than zero and is determined from analysis of a sample in a given matrix containing the analyte. (40 CFR Part 136, Appendix B)

National Environmental Laboratory Accreditation Conference (NELAC):
A voluntary organization of State and Federal environmental officials and interest groups purposed primarily to establish mutually acceptable standards for accrediting environmental laboratories. A subset of NELAP. (NELAC)

National Environmental Laboratory Accreditation Program (NELAP):
The overall National Environmental Laboratory Accreditation Program of which NELAC is a part. (NELAC)

Negative Control:
Measures taken to ensure that a test, its components, or the environment do not cause undesired effects, or produce incorrect test results. (NELAC)

NELAC Standards:
The plan of procedures for consistently evaluating and documenting the ability of laboratories performing environmental measurements to meet nationally defined standards established by the National Environmental Laboratory Accreditation Conference. (NELAC)

Performance Audit:
The routine comparison of independently obtained qualitative and quantitative measurement system data with routinely obtained data in order to evaluate the proficiency of an analyst or laboratory. (NELAC)

Performance Based Measurement System (PBMS):
A set of processes wherein the data quality needs, mandates or limitations of a program or project are specified and serve as criteria for selecting appropriate test methods to meet those needs in a cost-effective manner. (NELAC)

Positive Control:
Measures taken to ensure that a test and/or its components are working properly and producing correct or expected results from positive test subjects. (NELAC)

Precision:
The degree to which a set of observations or measurements of the same property, obtained under similar conditions, conform to themselves; a data quality indicator. Precision is usually expressed as standard deviation, variance or range, in either absolute or relative terms. (NELAC)

Preservation:
Refrigeration and/or reagents added at the time of sample collection (or later) to maintain the chemical and/or biological integrity of the sample. (NELAC)

Proficiency Testing:
A means of evaluating a laboratory's performance under controlled conditions relative to a given set of criteria through analysis of unknown samples provided by an external source. (NELAC) [2.1]

Proficiency Testing Program:
The aggregate of providing rigorously controlled and standardized environmental samples to a laboratory for analysis, reporting of results, statistical evaluation of the results and the collective demographics and results summary of all participating laboratories. (NELAC)

Proficiency Test Sample (PT):
A sample, the composition of which is unknown to the analyst and is provided to test whether the analyst/laboratory can produce analytical results within specified acceptance criteria. (QAMS)

Quality Assurance:
An integrated system of activities involving planning, quality control, quality assessment, reporting and quality improvement to ensure that a product or service meets defined standards of quality with a stated level of confidence. (QAMS)

Quality Assurance [Project] Plan (QAPP):
A formal document describing the detailed quality control procedures by which the quality requirements defined for the data and decisions pertaining to a specific project are to be achieved. (EAP-QAD)

Quality Control:
The overall system of technical activities which purpose is to measure and control the quality of a product or service so that it meets the needs of users. (QAMS)

Quality Control Sample:
An uncontaminated sample matrix spiked with known amounts of analytes from a source independent from the calibration standards. It is generally used to establish intra-laboratory or analyst specific precision and bias or to assess the performance of all or a portion of the measurement system. (EPA-QAD)

Quality Manual:
A document stating the management policies, objectives, principles, organizational structure and authority, responsibilities, accountability, and implementation of an agency, organization, or laboratory, to ensure the quality of its product and the utility of its product to its users. (NELAC)

Quality System:
A structured and documented management system describing the policies, objectives, principles, organizational authority, responsibilities, accountability, and implementation plan of an organization for ensuring quality in its work processes, products (items), and services. The

quality system provides the framework for planning, implementing, and assessing work performed by the organization and for carrying out required QA and QC (ANSI/ASQC-E-41994)

Quantitation Limits:
The maximum or minimum levels, concentrations, or quantities of a target variable (e.g., target analyte) that can be quantified with the confidence level required by the data user. (NELAC)

Range:
The difference between the minimum and the maximum of a set of values. (EPA-QAD)

Reagent Blank (method reagent blank):
A sample consisting of reagent(s), without the target analyte or sample matrix, introduced into the analytical procedure at the appropriate point and carried through all subsequent steps to determine the contribution of the reagents and of the involved analytical steps. (QAMS)

Reference Material:
A material or substance one or more properties of which are sufficiently well established to be used for the calibration of an apparatus, the assessment of a measurement method, or for assigning values to materials. (ISO Guide 30-2.1)

Reference Method:
A method of known and documented accuracy and precision issued by an organization recognized as competent to do so. (NELAC)

Reference Standard:
A standard, generally of the highest metrological quality available at a given location, from which measurements made at that location are derived. (VIM-6.0-8)

Replicate Analyses:
The measurements of the variable of interest performed identically on two or more sub-samples of the same sample within a short time interval. (NELAC)

Requirement:
Denotes a mandatory specification; often designated by the term “shall”. (NELAC)

Resource Conservation and Recovery Act (RCRA):
The enabling legislation under 42 USC 321 et seq. (1976), that gives EPA the authority to control hazardous waste from the “cradle-to-grave”, including its generation, transportation, treatment, storage, and disposal. (NELAC)

Safe Drinking Water Act (SDWA):
The enabling legislation, 42 USC 300f et seq. (1974), (Public Law 93-523), that requires the EPA to protect the quality of drinking water in the U.S. by setting maximum allowable contaminant levels, monitoring, and enforcing violations. (NELAC)

Sample Duplicate:
Two samples taken from and representative of the same population and carried through all steps of the sampling and analytical procedures in an identical manner. Duplicate samples are used to assess variance of the total method including sampling and analysis. (EPA-QAD)

Second Order Polynomial Curve (Quadratic): The 2nd order curves are a mathematical calculation of a slightly curved line over two axis. The y axis represents the instrument response (or Response ratio) of a standard or sample and the x axis represents the concentration. The 2nd order regression will generate a coefficient of determination (COD or r^2) that is a measure of the "goodness of fit" of the quadratic curvature the data. A value of 1.00 indicates a perfect fit. In order to be used for quantitative purposes, r^2 must be greater than or equal to 0.99.

Selectivity:
(Analytical chemistry) the capability of a test method or instrument to respond to a target substance of constituent in the presence of non-target substances. (EPA-QAD)

Sensitivity:
The capability of a method or instrument to discriminate between measurement responses representing different levels (e.g., concentrations) of a variable of interest. (NELAC)

Spike:
A known mass of target analyte added to a blank, sample or sub-sample; used to determine recovery efficiency or for other quality control purposes.

If the mandated or requested test method does not specify the spiking components, the laboratory shall spike all reportable components to be reported in the Laboratory Control Sample and Matrix Spike. However, in cases where the components interfere with accurate assessment (such as simultaneously spiking chlordane, toxaphene and PCBs in Method 608), the test method has an extremely long list of components or components are incompatible, a representative number (at a minimum 10%) of the listed components may be used to control the test method. The selected components of each spiking mix shall represent all chemistries, elution patterns and masses permit specified analytes and other client requested components. However, the laboratory shall ensure that all reported components are used in the spike mixture within a two-year time period. (NELAC)

Standard:
The document describing the elements of laboratory accreditation that has been developed and established within the consensus principles of NELAC and meets the approval requirements of NELAC procedures and policies. (ASQC)

Standard Operating Procedures (SOPs):
A written document which details the method of an operation, analysis, or action whose techniques and procedures are thoroughly prescribed and which is accepted as the method for performing certain routine or repetitive tasks. (QAMS)

Standardized Reference Material (SRM):
A certified reference material produced by the U.S. National Institute of Standards and Technology or other equivalent organization and characterized for absolute content, independent of analytical method. (EPA-QAD)

Supervisor (however named):
The individual(s) designated as being responsible for a particular area or category of scientific analysis. This responsibility includes direct day-to-day supervision of technical employees, supply and instrument adequacy and upkeep, quality assurance/quality control duties, and ascertaining that technical employees have the required balance of education, training and experience to perform the required analyses. (NELAC)

Surrogate:
A substance with properties that mimic the analyte of interest. It is unlikely to be found in environment samples and is added to them for quality control purposes.

Surrogate compounds must be added to all samples, standards, and blanks, for all organic chromatography methods except when the matrix precludes its use or when a surrogate is not available. Poor surrogate recovery may indicate a problem with sample composition and shall be reported to the client whose sample produced poor recovery. (QAMS)

Systems Audit (also Technical Systems Audit):
A thorough, systematic, qualitative on-site assessment of the facilities, equipment, personnel, training, procedures, record keeping, data validation, data management, and reporting aspects of a total measurement system. (EPA-QAD)

Technical Director:
Individuals(s) who has overall responsibility for the technical operation of the environmental testing laboratory. (NELAC)

Test:
A technical operation that consists of the determination of one or more characteristics or performance of a given product, material, equipment, organism, physical phenomenon, process, or service according to a specified procedure. The result of a test is normally recorded in a document sometimes called a test report or a test certificate. (ISO/IEC Guide 2-12.1, amended)

Test Method:
An adoption of a scientific technique for a specific measurement problem, as documented in a laboratory SOP. (NELAC)

Toxic Substances Control Act (TSCA):
The enabling legislation in 15 USC 2601 et seq., (1976) that provides for testing, regulating, and screening all chemicals produced or imported into the United States for possible toxic effects prior to commercial manufacture. (NELAC)

Traceability:
The property of a result of a measurement whereby it can be related to appropriate standards, generally international or national standards, through an unbroken chain of comparisons. (VIM-6.12)

Uncertainty:
A parameter associated with the result of a measurement that characterizes the dispersion of the value that could reasonably be attributed to the measured value.

United States Environmental Protection Agency (EPA):
The Federal governmental agency with responsibility for protecting public health and safeguarding and improving the natural environment (i.e., the air, water, and land) upon which human life depends. (US-EPA)

Validation:
The process of substantiating specified performance criteria. (EPA-QAD)

Verification:
Confirmation by examination and provision of evidence that specified requirements have been met. (NELAC)

NOTE: In connection with the management of measuring equipment, verification provides a means for checking that the deviations between values indicated by a measuring instrument and corresponding known values of a measured quantity are consistently smaller than the maximum allowable error defined in a standard, regulation or specification peculiar to the management of the measuring equipment.

The result of verification leads to a decision either to restore in service, to perform adjustment, to repair, to downgrade, or to declare obsolete. In all cases, it is required that a written trace of the verification performed shall be kept on the measuring instrument's individual record.

Work Cell:
A well-defined group of analysts that together perform the method analysis. The members of the group and their specific functions within the work cell must be fully documented. (NELAC)

Acronyms

BS – Blank Spike
BSD – Blank Spike Duplicate
CAR – Corrective Action Report
CCV – Continuing Calibration Verification
CF – Calibration Factor
CFR – Code of Federal Regulations
COC – Chain of Custody
CRS – Change Request Form
DOC – Demonstration of Capability
DQO – Data Quality Objectives
DU – Duplicate
DUP - Duplicate
EHS – Environment, Health and Safety
EPA – Environmental Protection Agency
GC - Gas Chromatography
GC/MS - Gas Chromatography/Mass Spectrometry
HPLC - High Performance Liquid Chromatography
ICP - Inductively Coupled Plasma Atomic Emission Spectroscopy
ICV – Initial Calibration Verification
IDL – Instrument Detection Limit
IH – Industrial Hygiene
IS – Internal Standard
LCS – Laboratory Control Sample
LCSD – Laboratory Control Sample Duplicate
LIMS – Laboratory Information Management System
MDL – Method Detection Limit
MS – Matrix Spike
MSD – Matrix Spike Duplicate
MSDS - Material Safety Data Sheet
NELAC - National Environmental Laboratory Accreditation Conference
NELAP - National Environmental Laboratory Accreditation Program
PT – Performance Testing
QAM – Quality Assurance Manual
QA/QC – Quality Assurance / Quality Control
QAPP – Quality Assurance Project Plan
RF – Response Factor
RPD – Relative Percent Difference
RSD – Relative Standard Deviation
SD – Standard Deviation
SOP: Standard Operating Procedure
TAT – Turn-Around-Time
VOA – Volatiles
VOC – Volatile Organic Compound

Appendix 7.

Laboratory Certifications, Accreditations, Validations

TestAmerica North Canton maintains certifications, accreditations, certifications, and validations with numerous state and national entities. Programs vary but may include on-site audits, reciprocal agreements with another entity, performance testing evaluations, review of the QA Manual, Standard Operating Procedures, Method Detection Limits, training records, etc. At the time of this QA Manual revision, the laboratory has accreditation/certification/licensing with the following organizations:

Organization	Certificate Number	Organization	Certificate Number
California	01144CA	New Jersey	OH001
Connecticut	PH-0590	New York	10975
Florida	E87225	Pennsylvania	68-00340
Georgia	--	OVAP	CL0024
Illinois	200004	US ACE (Army)	--
Kansas	E-10336	USDA (Dept.of Agriculture)	S-62345
Kentucky Underground Storage Tank Program	0058	West Virginia	210
Minnesota	039-999-348	Wisconsin	999518190

The certificates and parameter lists (which may differ) for each organization may be found on the corporate web site, the laboratory's public server, the final report review table, and in the following offices: QA, marketing, and project management.

Claims of Accreditation Status

TestAmerica North Canton has agreed to make only valid claims as to its accreditation/certification status by any authority by ensuring that the expiration dates are not exceeded and the method-specific scope or parameter lists are supportable, as required by each. Any false claims would be reported to that authority. The agreement covers the use of the authority's name, such as "Authority-Accredited," logo, or certificate number. The only valid proof of accreditation/certification is the current certificate and scope of the authority. It is the responsibility of the laboratory to make these documents available to all staff, and it is the staff's duty to reference only the current documents.

A report with scope and non-scope analytes may only be presented on the same report if the non-accredited results are clearly and unambiguously identified. No report with non-scope analytes may be associated with the logo, “Authority accredited” phrase, or the certificate number. Only the analytes specified by a unique method are valid within the scope. There shall be no intentional misleading of the users of the laboratory’s services in this regard.

No opinions and/or interpretations based on results outside the laboratory’s scope may be presented on a document referenced by “Authority-accredited, the logo, or the certificate number. If these are made, they must be written in a separate letter which is not endorsed by the authority.

The “Authority-accredited” logo may only be affixed to equipment calibrated by a laboratory that is accredited by the authority. If calibration labels contain the logo, they must also show the calibration laboratory’s name or its certificate number, the instrument’s unique identification, the date of the last calibration, and a cross-reference to the last calibration certificate.

Should the company decide to use the “Authority-accredited” logo in marketing activities, no misrepresentation may occur. Only reference to the accredited scope at a specific laboratory site is allowed. If any “Authority-accredited” language is used in proposals or quotations, any non-scope analytes must be clearly denoted as not accredited by that authority. The same is true for any use of laboratory letterhead with the “Authority-accredited” wording or logo. The logo may not be affixed to any material, item, product, part, or packaging, thereby implying accreditation status to that piece. In literature, any use of the logo must be positioned adjacent to the accredited laboratory’s name and clearly state that the presence of the logo does not imply certification/approval of the products tested. At no time may the logo appear to suggest that a person is accredited. Misrepresentation of accreditation status is never allowed and must be reported if it occurs. If in doubt, the idea of the logo’s use may be presented to the authority for approval.

If accreditation is terminated or suspended, the laboratory will immediately cease to use the “Authority-accredited” wording, the logo, or the certificate number reference in any way and inform clients impacted by the change.

Appendix 8.

Data Qualifiers

Qualifier Organic	Qualifier Inorganic	Footnote
U	U	Analyte analyzed for but was not detected.
G	G	Elevated reporting limit. The reporting limit is elevated due to matrix interference.
J	B	Estimated result. Result is less than RL.
E	I	Estimated result. Result concentration exceeds the calibration range.
M	M	Matrix spike recovery outside of limits.
B	J	Method blank contamination. The associated method blank contains the target analyte at a reportable level.
P	*	Relative percent difference (RPD) is outside stated control limits.
a	N	Spiked analyte recovery is outside stated control limits.
*		Surrogate recovery is outside stated control limits.
PG		The percent difference between the original and confirmation analyses is greater than 40%.

This is not an exhaustive list of qualifiers. All qualifiers are defined on each data sheet. Client specific qualifiers may also be used, and would also be defined on the data sheet.

Title: GAS CHROMATOGRAPHIC ANALYSIS BASED ON METHODS 8000B, 8021B, 8081A, 8082, 8151A, 615 and 8015B

Approvals (Signature/Date):

Technology Specialist	1/13/09 Date	Technology Specialist	1-15-09 Date
Quality Assurance Manager	1/12/09 Date	Health & Safety Coordinator	1/12/09 Date
Technical Director	1/12/09 Date	Laboratory Director	1/16/09 Date

This SOP was previously identified as SOP NC-GC-038, Rev 0, Dated 01/21/08

Copyright Information:

This documentation has been prepared by TestAmerica Analytical Testing Corp. and its affiliates ("TestAmerica"), solely for their own use and the use of their customers in evaluating their qualifications and capabilities in connection with a particular project. The user of this document agrees by its acceptance to return it to TestAmerica upon request and not to reproduce, copy, lend, or otherwise disclose its contents, directly or indirectly, and not to use if for any other purpose other than that for which it was specifically provided. The user also agrees that where consultants or other outside parties are involved in the evaluation process, access to these documents shall not be given to said parties unless those parties also specifically agree to these conditions.

THIS DOCUMENT CONTAINS VALUABLE CONFIDENTIAL AND PROPRIETARY INFORMATION. DISCLOSURE, USE OR REPRODUCTION OF THESE MATERIALS WITHOUT THE WRITTEN AUTHORIZATION OF TESTAMERICA IS STRICTLY PROHIBITED. THIS UNPUBLISHED WORK BY TESTAMERICA IS PROTECTED BY STATE AND FEDERAL LAW OF THE UNITED STATES. IF PUBLICATION OF THIS WORK SHOULD OCCUR, THE FOLLOWING NOTICE SHALL APPLY: ©COPYRIGHT 2009 TESTAMERICA ANALYTICAL TESTING CORP. ALL RIGHTS RESERVED..

Facility Distribution No. _____ **Distributed To:** _____

TABLE OF CONTENTS

1. Scope and Application…….. 4
2. Summary of Method……. 4
3. Definitions…… 4
4. Interferences……. 4
5. Safety…… 4
6. Equipment and Supplies…… 6
7. Reagents and Standards…… 6
8. Sample Preservation and Storage……. 6
9. Quality Control……. 7
10. Calibration and Standardization…… 9
11. Procedure…….. 15
12. Data Analysis and Calculations…… 17
13. Method Performance…… 20
14. Pollution Prevention……. 21
15. Waste Management…….. 21
16. References…… 21
17. Miscellaneous……... 21

List of Appendices:

Appendix A Analysis of Volatile Organics based on Method 8021B

Appendix B Analysis of Organochlorine Pesticides based on Method 8081A

Appendix C Analysis of Organochlorine Pesticides and PCBs based on Method 8082

Appendix D Analysis of Phenoxy Acid Herbicides based on Method 8151A

Appendix E Total Petroleum Hydrocarbons Based on 8015B

Company Confidential & Proprietary

LIST OF TABLES

Table A1	Standard Analyte Lists for 8021B
Table A2	Recommended conditions for Method 8021B
Table A3	Surrogate and Internal Standard Concentrations, Method 8021B
Table A4	Concentrations for LCS and MS/MSD Compounds, Method 8021B
Table A5	Initial Calibration for Water Analysis, Method 8021B
Table A6	Soil or Water Heated Initial Calibration Curve
Table B1	Standard Analyte and Reporting Limits, Method 8081A
Table B2	Recommended Conditions, Method 8081A
Table B3	Calibration Levels, Method 8081A
Table B4	Column Degradation Evaluation Mix, Method 8081A
Table B5	LCS/Matrix Spike and Surrogate Spike Levels, Method 8081A
Table B6	LCS/Matrix Spike and Surrogate Spike Levels for TCLP, Method 8081A
Table B7	Suggested Analytical Sequence, Method 8081A
Table C1	Standard Analyte List, Method 8082
Table C2	Instrumental Conditions, Method 8082
Table C3	Calibration Standards, Method 8082
Table C4	LCS/Matrix Spike and Surrogate Spike Levels for Aroclor Analysis, Method 8082
Table C5	Michigan Analyte List and Reporting Limits, Method 8082
Table C6	Suggested Analytical Sequence, Method 8082
Table D1	Standard Analyte List, Method 8151A
Table D2	Instrumental Conditions, Method 8151A
Table D3	LCS/Matrix Spike and Surrogate Spike Levels, Method 8151A
Table D4	Calibration Standards, Method 8151A
Table E1	Suggested GC Temperature Program for TPH Analysis
Table E2	Reporting Limits for TPH Analysis
Table E3	Calibration Standards, Method 8015B

Company Confidential & Proprietary

1. SCOPE AND APPLICATION

1.1. This SOP describes procedures for analysis of organic analytes by Gas Chromatography (GC). The procedures are based on SW-846 methodology and are applicable for measurements made to comply with the Resource Conservation and Recovery Act (RCRA). Individual analytes and methods are described in the appendices. See the list of appendices noted in the Table of Contents to determine the appropriate section of the SOP. Reporting limits are listed in each appendix.

2. SUMMARY OF METHOD

2.1. In general, semivolatile analytes in aqueous samples are prepared for analysis using continuous or separatory funnel liquid / liquid extraction or solid phase extraction (SOP NC-OP-032). Solid samples are prepared using sonication, Soxhlet or automated Soxhlet (PCB only) (SOP NC-OP-032). Volatile analytes are prepared for analysis using purge and trap methodology (Appendix A).

2.2. After the initial preparation step, the sample is introduced to the GC and concentrations of target analytes are measured by the detector response within a defined retention time window, relative to the response to standard concentrations. Internal or external standardization procedures are used as specified in the method appendices.

3. DEFINITIONS

3.1. Refer to the TestAmerica North Canton Quality Assurance Manual (QAM), current version, for definitions of terms used in this document.

4. INTERFERENCES

4.1. Contamination by carryover can occur when a low concentration sample is analyzed after a high concentration sample. Co-elution of target analytes with non-targets can occur, resulting in false positives or biased high results. In particular, this is a problem with non-selective detectors such as the Flame Ionization Detector (FID). See Appendices A through E for interferences specific to individual tests and suggested corrective actions. All glassware is cleaned per SOP NC-QA-014.

5. SAFETY

5.1. Employees must abide by the policies and procedures in the Corporate Environmental Health and Safety Manual and this document.

5.2. Eye protection that prevents splash, laboratory coat, and appropriate gloves must be worn while samples, standards, solvents, and reagents are being handled. Refer to the TestAmerica North Canton Corporate Environmental Health and Safety Manual for a complete description of personal protection equipment. Cut-resistant gloves must be worn doing any other task that presents a strong possibility of getting cut. Disposable gloves that have become contaminated must be removed and discarded; other gloves must be cleaned immediately. Latex, Nitrile and vinyl gloves all provide adequate protection against the methanol used in this method.

5.3. The following is a list of the materials used in this method, which have a serious or significant hazard rating. NOTE: This list does not include all materials used in the method. The table contains a summary of the primary hazards listed in the MSDS for each of the materials listed in the table. A complete list of materials used in the method can be found in the Reagents and Standards section. Employees must review the information in the MSDS for each material before using it for the first time or when there are major changes to the MSDS.

Company Confidential & Proprietary

Material	Hazards	Exposure Limit (2)	Signs and symptoms of exposure
Methanol	Flammable Poison Irritant	200 ppm-TWA	A slight irritant to the mucous membranes. Toxic effects exerted upon nervous system, particularly the optic nerve. Symptoms of overexposure may include headache, drowsiness and dizziness. Methyl alcohol is a defatting agent and may cause skin to become dry and cracked. Skin absorption can occur; symptoms may parallel inhalation exposure. Irritant to the eyes.
Acetone	Flammable	1000 ppm-TWA	Inhalation of vapors irritates the respiratory tract. May cause coughing, dizziness, dullness, and headache.
Hexane	Flammable Irritant	500 ppm-TWA	Inhalation of vapors irritates the respiratory tract. Overexposure may cause lightheadedness, nausea, headache, and blurred vision. Vapors may cause irritation to the skin and eyes.
Methylene Chloride	Carcinogen Irritant	25 ppm-TWA 125 ppm-STEL	Causes irritation to respiratory tract. Has a strong narcotic effect with symptoms of mental confusion, light-headedness, fatigue, nausea, vomiting and headache. Causes irritation, redness and pain to the skin and eyes. Prolonged contact can cause burns. Liquid degreases the skin. May be absorbed through skin.
Sulfuric Acid	Corrosive Oxidizer Dehydrator Poison Carcinogen	1 mg/m3-TWA	Inhalation produces damaging effects on the mucous membranes and upper respiratory tract. Symptoms may include irritation of the nose and throat, and labored breathing. Symptoms of redness, pain, and severe burn can occur. Contact can cause blurred vision, redness, pain and severe tissue burns. Can cause blindness.
n-Propanol	Flammable Irritant	200 ppm-TWA	Causes irritation to the eyes, skin, and respiratory tract. May be absorbed through the skin. High concentrations can result in central nervous system depression. Severe exposure may cause respiratory depression, unconsciousness, convulsions, and death.
Hydrochloric Acid	Corrosive Poison	5 ppm-Ceiling	Inhalation of vapors can cause coughing, choking, inflammation of the nose, throat, and upper respiratory tract, and in severe cases, pulmonary edema, circulatory failure, and death. Can cause redness, pain, and severe skin burns. Vapors are irritating and may cause damage to the eyes. Contact may cause severe burns and permanent eye damage.
1 – Always add acid to water to prevent violent reactions.			
2 – Exposure limit refers to the OSHA regulatory exposure limit.			

5.4. It is recommended that analysts break up work tasks to avoid repetitive motion tasks, such as opening a large number of vials or containers in one time period.

5.5. Exposure to chemicals must be maintained as low as reasonably achievable. All samples with stickers that read “Caution/Use Hood!” must be opened in the hood. Contact the EH&S Coordinator if this is not possible. Solvent and waste containers must be kept closed unless transfers are being made.

5.6. Opened containers of neat standards must be handled in a fume hood.

5.7. Sample extracts and standards, which are in a flammable solvent, must be stored in an explosion-proof refrigerator.

5.8. When using hydrogen gas as a carrier, all precautions listed in the CSM must be observed.

5.9. Standard preparation and dilution must be performed inside an operating fume hood.

5.10. The gas chromatograph contains zones that have elevated temperatures. The analyst needs to be aware of the locations of those zones, and must cool them to room temperature prior to working on them.

5.11. There are areas of high voltage in both the gas chromatograph and the mass spectrometer. Depending on the type of work involved, either turn the power to the instrument off, or disconnect it from its source of power.

5.12. All work must be stopped in the event of a known or potential compromise to the health and safety of a TestAmerica associate. The situation must be reported immediately to the EH&S Coordinator and the Laboratory Supervisor.

6. EQUIPMENT AND SUPPLIES

6.1. An analytical system complete with a gas chromatograph is required. A data system capable of measuring peak area and/or height is required. Recommended equipment and supplies for individual methods are listed in each method appendix.

7. REAGENTS AND STANDARDS

7.1. Stock Standards

7.1.1. Stock standards are purchased as certified solutions or prepared from pure solutions. Stock standards for Method 8021B are stored at -10 to -20°C. Other stock standard solutions are stored as recommended by the manufacturer. All stock standards must be protected from light. Stock standard solutions must be brought to room temperature before using.

7.1.2. Semivolatile stock standard solutions must be replaced after one year. Stock standards of gases must be replaced at least every week, unless the acceptability of the standard is demonstrated (Less than 20% drift from the initial calibration is an acceptable demonstration). Other volatile stock standards must be replaced every six months or sooner if comparison with check standards prepared from an independent source indicates a problem.

7.1.3. Expiration times for all standards are measured from the time the standard is prepared or from the time that the standard ampoule is opened, if the standard is supplied in a sealed ampoule. If vendor-supplied standard has an earlier expiration date then that date is used. Refer to SOP NC-QA-017, Standards and Reagents, for additional information. The standard preparation information is detailed in the Standard Logbook.

7.2. Calibration Standards

7.2.1. Volatile Calibration Standards

7.2.1.1. The procedure for preparation of volatile standards is given in Appendix A.

7.2.2. Semivolatile Calibration Standards

7.2.2.1. Semivolatile calibration standards are prepared as dilutions of the stock standards. Surrogates and internal standards are used as specified in the method appendices. Semivolatile calibration solutions must be refrigerated at $\leq$6°C and protected from light. The standards must be replaced at least every six months or sooner if comparison with check standards indicates a problem.

7.3. Gases for carrier and make-up: Hydrogen, Helium, Nitrogen, Zero Air.

7.4. Quality control (QC) Standards

7.4.1. QC standards (matrix spiking and LCS standards) are prepared and stored in the same way as calibration standards. They must be made from a stock independent from the calibration standards.

8. SAMPLE PRESERVATION AND STORAGE

8.1. The holding time for semivolatile extracts is 40 days from extraction to analysis. Samples must be refrigerated at $\leq 6^{o}$C. Volatile sample storage conditions and holding times are given in Appendix A.

9. QUALITY CONTROL

9.1. Initial Demonstration of Capability

9.1.1. For the standard analyte list, the initial demonstration and method detection limit (MDL) studies described in Section 13 must be acceptable before analysis of samples may begin.

9.1.2. For non-standard analytes, an MDL study must be performed and calibration curve generated before analyzing any samples, unless lesser requirements are previously agreed to with the client. In any event, the minimum initial demonstration required is analysis of an extracted standard at the reporting limit and a single point calibration.

9.2. Batch Definition

9.2.1. Batches are defined at the sample preparation stage. Batches must be kept together through the whole analytical process as far as possible, but it is not mandatory to analyze prepared extracts on the same instrument or in the same sequence. Refer to the TestAmerica North Canton QC Program document (Policy QA-003) for further details of the batch definition. Ohio VAP projects must reference this SOP instead of policy QA-003 for information on QC.

9.2.2. Quality Control Batch

9.2.2.1. The batch is a set of up to 20 samples of the same matrix processed using the same procedures and reagents within the same time period. The Quality Control batch must contain a matrix spike / spike duplicate (MS/MSD), a Laboratory Control Sample (LCS), and a method blank. Laboratory generated QC samples (Blank, LCS, MS/MSD) do not count towards the maximum 20 samples in a batch. Field QC samples are included in the batch count. In some cases, at client request, the MS/MSD may be replaced with a matrix spike and sample duplicate. If insufficient sample is available for an MS/MSD a LCSD may be substituted.

9.3. Control Limits

9.3.1. In-house historical control limits may be determined for surrogates, matrix spikes, and laboratory control samples (LCS). These limits must be determined periodically. The recovery limits are mean recovery $\pm$ 3 standard deviations, unless that limit is tighter than the calibration criteria, in which case limits may be widened. Project or program specific control limits may be used in place of in-house limits. Refer to Policy QA-003 for more details.

9.3.2. These limits do not apply to dilutions (except for tests without a separate extraction), but surrogate and matrix spike recoveries must be reported unless the dilution is more than 5X.

Company Confidential & Proprietary

9.3.3. All surrogate, LCS, and MS recoveries (except for dilutions) must be entered into QuantIMS (when available) or other database so that accurate historical control limits can be generated. For tests without a separate extraction, surrogates and matrix spikes must be reported for all dilutions.

9.3.4. Refer to the QC Program document (Policy QA-003) for further details of control limits.

9.4. Surrogates

9.4.1. All methods must use surrogates to the extent possible. Surrogate recoveries in samples and QC samples must be assessed to ensure that recoveries are within established limits. Surrogate recoveries must be met in the method blank (MB) and Laboratory Check Samples (LCS or LCS/LCSD). If any surrogates are outside limits, the following corrective actions must take place (except for dilutions):

- Check all calculations for error.
- Ensure instrument performance is acceptable.
- Recalculate the data and/or re-analyze the extract if either of the above checks reveals a problem.
- The decision to re-analyze or flag the data must be made in consultation with the client. It is only necessary to reprepare / re-analyze a sample once to demonstrate poor surrogate recovery is due to matrix effect, unless the analyst believes that the repeated out-of-control results are not due to matrix effect.

  Note: For DoD QSM, all surrogates must meet criteria. For Ohio VAP Projects, all surrogates must meet criteria unless the samples are ND and the surrogates are out high. Reanalysis or reprepparation of the samples is required if these criteria are not met.

9.4.2. If dual column analysis is used, the choice of which result to report is made in the same way as for samples (Section 12.1.2) unless one column is out of control, in which case the in-control result is reported.

9.4.3. If the surrogates are out of control for the sample, matrix spike, and matrix spike duplicate, then matrix effect has been demonstrated for that sample and reprepparation is not necessary. If the sample is out of control and the MS and/or MSD is in control, then reprepparation or flagging of the data is required. Reprepparation includes the parent sample and MS/MSD.

9.4.4. Refer to TestAmerica North Canton QC Program document (Policy QA-003) for further details of the corrective actions.

9.5. Method Blanks

9.5.1. For each batch of samples, analyze a method blank. The method blank consists of reagent water for aqueous semivolatile samples and sodium sulfate for semivolatile soils tests (Refer to SOP NC-OP-032 for details). For low-level volatile soils, the method blank consists of reagent water and Ottawa sand. For medium-level volatile solids, the method blank consists of methanol and Ottawa sand. Surrogates are added and the method blank is carried through the entire analytical procedure. The method blank must have acceptable surrogate recoveries. If surrogate recoveries are not acceptable, the data must be evaluated to determine if the method blank has served the purpose of demonstrating that the analysis is free of contamination. If surrogate recoveries are low and there are reportable analytes in the associated samples, re-extraction of the blank and affected samples will normally be required. Consultation with the client must take place. For Ohio VAP samples, all analytes must meet criteria or the samples must be re-extracted if sufficient volume of sample remains.

Company Confidential & Proprietary

9.5.2. The method blank must not contain any analyte of interest at, or above, the reporting limit (except common laboratory contaminants, see below) or at, or above, 5% of the measured concentration of that analyte in the associated samples, whichever is higher.

9.5.3. If the analyte is a common laboratory contaminant (methylene chloride, acetone, 2-butanone, phthalate esters), the data may be reported with qualifiers if the concentration of the analyte is less than five times the reporting limit. Such action must be taken in consultation with the client.

9.5.4. Re-extraction and re-analysis of samples associated with an unacceptable method blank is required when reportable concentrations are determined in the samples.

9.5.5. If there is no target analyte greater than the RL in the samples associated with an unacceptable method blank, the data may be reported with qualifiers. Such action must be taken in consultation with the client.

Note: For Ohio VAP projects, the result must be below the reporting limit or samples must be re-extracted unless the samples are non-detect.

9.5.6. Refer to TestAmerica North Canton QC Program document (Policy QA-003) for further details of the corrective actions.

9.5.7. Refer to SOP NC-QA-016 for further details concerning DoD Project Work.

9.6. Laboratory Control Samples (LCS)

9.6.1. For each batch of samples, analyze a LCS. The LCS contains a representative subset of the analytes of interest, and must contain the same analytes as the matrix spike. The LCS may also contain the full set of analytes with a subset of control analytes. If any control analyte is outside the laboratory established historical control limits, corrective action must occur. All non-controlling compounds must attain a recovery of 5% or greater if the compound is on the client's list. For Ohio VAP samples, all analytes must meet criteria or the samples must be re-extracted if sufficient volume of sample remains.

9.6.2. If the batch is not re-extracted and re-analyzed, the reasons for accepting the batch must be clearly presented in the project record and the report. (an example of acceptable reasons for not reanalyzing might be that the matrix spike and matrix spike duplicate are acceptable and the sample surrogate recoveries are good, demonstrating that the problem was confined to the LCS.)

9.6.3. If re-extraction and re-analysis of the batch is not possible due to limited sample volume or other constraints, the LCS is reported, all associated samples are flagged, and appropriate comments are made in a narrative to provide further documentation.

9.6.4. The LCS must have acceptable surrogate recoveries. If surrogate recoveries are low, re-extraction of the LCS and affected samples will normally be required. Consultation with the client should take place. For Ohio VAP samples, all analytes must meet criteria or the samples must be re-extracted if sufficient volume of sample remains.

9.6.5. Refer to TestAmerica North Canton QC Program document (Policy QA-003) for further details of the corrective action.

9.6.6. If dual column analysis is used, the choice of which result to report is made in the same way as for samples (Section 12.1.2), unless one column is out of control, in which case the in control result is reported.

9.6.7. LCS compound lists are included in the appendices.

Company Confidential & Proprietary

9.7. Matrix Spikes

9.7.1. For each QC batch, analyze a matrix spike and matrix spike duplicate. Spiking compounds and levels are given in the appendices. Compare the percent recovery and relative percent difference (RPD) to those in the laboratory-specific historically generated limits.

- If any individual recovery or RPD falls outside the acceptable range, corrective action must occur. The initial corrective action must be to check the recovery of that analyte in the Laboratory Control Sample (LCS). Generally, if the recovery of the analyte in the LCS is within limits, then the laboratory operation is in control and analysis may proceed.
- If the recovery for any component is outside QC limits for both the Matrix spike / spike duplicate and the LCS, the laboratory is out of control and corrective action must be taken. Corrective action must normally include repreparation and re-analysis of the batch.
- If an MS/MSD is not possible due to limited sample, then an LCS duplicate must be analyzed. The recovery for each spike of the pair must be within established control limits. If the RPD is out of control, but both accuracy recoveries are within acceptance criteria, prepare an NCM and qualify report.
- The matrix spike / duplicate must be analyzed at the same dilution as the unspiked sample, unless the matrix spike components would then be above the calibration range.

9.7.2. If dual column analysis is used, the choice of which result to report is made in the same way as for samples (Section 12.1.2), unless one column is out of control, in which case the in control result is reported.

9.8. Control Limits

9.8.1. Control limits are established by the laboratory as described in SOP, NC-QA-0018.

9.8.2. Laboratory control limits are internally generated and updated periodically unless method specified. Control limits are easily accessible via the LIMs (QC Browser program).

10. CALIBRATION AND STANDARDIZATION

10.1. Internal or external calibration may be used. Internal calibration is recommended unless the sample matrix is likely to interfere with the quantitation of the internal standard. In either event, prepare standards containing each analyte of interest at a minimum of five concentration levels. The low-level standard must be at, or below, the reporting limit. The other standards define the working range of the detector. Recommended calibration levels are given in the appendices.

10.2. A new calibration curve must be generated after major changes to the system or when the continuing calibration criteria cannot be met. Major changes include new columns, changing PID lamps or replacing the ECD detector. A new calibration is not required after clipping the column, replacing the septum or syringe, or other minor maintenance.

10.3. With the exception of Section 10.4 below, it is NOT acceptable to remove points from a calibration curve for the purpose of meeting criteria, unless the points are the highest or lowest on the curve, AND the reporting limit and/or linear range is adjusted accordingly. In any event, at least five points must be included in the calibration curve. Quadratic (second order) calibrations require at least six points. Third order calibrations require at least seven points.

10.4. A level may be removed from the calibration if the reason can be clearly documented (for example, a broken vial or no purge run). A minimum of five levels must remain in the calibration. The documentation must be retained with the initial calibration. Alternatively, if the analyst believes that a point on the curve is inaccurate, the point may be re-analyzed and the re-analysis used for the calibration. All initial calibration

points in a single calibration curve must be analyzed without any changes to instrument conditions, and all points in a single calibration curve must be analyzed within 24 hours.

10.5. External Standard Calibration

10.5.1. Quantitation by the external standard method assumes a proportional relationship between the calibration run and the analyte in the sample. To use this approach, introduce each calibration standard into the GC using the technique that will be used for samples. The ratio of the peak height or area response to the mass or concentration injected may be used to prepare a calibration curve.

$$\text{Calibration Factor or Response Factor} \quad (CF) \text{ or } (RF)) = \frac{\text{Area or Height of Peak}}{\text{Mass Injected (ng)}}$$

Some data systems may use the inverse of this formula. This is acceptable so long as the same formula is used for standards and samples. It is also possible to use the concentration of the standard rather than the mass injected. (This would require changes in the equations used to calculate the sample concentrations). Use of peak area or height must be consistent. However, if matrix interferences would make quantitation using peak area inaccurate for a particular sample, then peak height may be used as a substitute.

10.6. Internal Standard Calibration

10.6.1. The internal standard approach assumes that variations in instrument sensitivity, amount injected etc. can be corrected by determining the ratio of the response of the analyte to the response of an internal standard that has been added to the extract. To use this approach, select one or more internal standard(s) that are similar in analytical behavior to the compounds of interest. Recommended internal standards are given in the appendices. The analyst must demonstrate that the measurement of the internal standard is not affected by method or matrix interferences. If matrix interference is observed, reanalysis of the sample is required. If matrix interference is confirmed, report the second analysis and note in the Case Narrative. . For Ohio VAP projects, the laboratory must re-analyze any sample where the internal standard fails, and there is no evidence of matrix interference. If there is no matrix interference, the sample must be reanalyzed at the original dilution. If the internal standard is within criteria, report the second analysis. If the internal standard is still outside of criteria, the sample must be analyzed at a second dilution. If the internal standard still does not meet criteria, the sample must be diluted until the internal standard meets criteria. Multiple runs may be required.

10.6.2. Introduce each calibration standard into the GC using the technique that will be used for samples. Response factors (RF) for each compound are calculated as follows.

$$RF = \frac{A_s \times C_{is}}{A_{is} \times C_s}$$

Where:

A_s = Response for the analyte to be measured
A_{is} = Response for the internal standard
C_{is} = Concentration of internal standard
C_s = Concentration of the analyte to be determined in the standard

10.7. Calibration Curve Fits

10.7.1. Average response factor, linear regression, or quadratic curves may be used to fit the data. Average response factor may be used if the average % RSD of the response factors or calibration factors of all the analytes in the calibration standard taken together is ≤ 20%. The average % RSD is calculated by summing the RSD value for each analyte and dividing by the total number of analytes. NOTE: This is not allowed for Ohio VAP projects.

10.7.2. In general, for environmental analysis, average response factors are the most appropriate calibration model. Linear or curved regression fits must only be used if the analyst has reason to believe that the average RF model does not fit the normal concentration/response behavior of the detector. Linear or quadratic curve fits may be used if the compounds have historically exhibited a non-linear response.

10.7.3. Average Response Factor

The average response factor may be used if the average percent relative standard deviation (% RSD) of all the response factors taken together is ≤ 20%.

The equation for average response factor is:

$$Average\ response\ factor = \overline{RF} = \frac{\sum_{i=1}^{n} RF_i}{n}$$

Where: n = Number of calibration levels

$\sum_{i=1}^{n} RF_i$ = Sum of response factors for each calibration level

10.7.4. Linear Regression

The linear fit uses the following functions:

10.7.4.1. External Standard

$$y = ax + b$$

$$or$$

$$x = \frac{(y - b)}{a}$$

Where: y = Instrument response
x = Concentration
a = Slope
b = Intercept

10.7.4.2. Internal Standard

$$C_s = \frac{\left[\frac{A_s C_{is}}{A_{is}} - b\right]}{a}$$

Where: C_s = Concentration in the sample
A_s = Area of target peak in the sample
A_{is} = Area of internal standard in the sample
C_{is} = Concentration of the internal standard

10.7.5. Quadratic Curve

The quadratic curve uses the following functions:

10.7.5.1. External standard

$$y = ax + cx^2 + b$$

Where c is the curvature

10.7.5.2. Internal Standard

$$y = a\left(\frac{A_s \times C_{is}}{A_{is}}\right) + c\left(\frac{A_s \times C_{is}}{A_{is}}\right)^2 + b$$

10.8. Evaluation of Calibration Curves

10.8.1. The percent relative standard error (% RSE) from the calibration curve is used to evaluate the initial calibration. This provides a measure of how much error is associated with using the calibration curve for quantitation.

10.8.2. The least squares regression line is calculated and used to calculate the predicted concentration for each level. The percent relative standard error is calculated as follows.

$$\%\ RSE = 100\% \times \sqrt{\frac{\sum_{i=1}^{N}\left[\frac{C_i - PC_i}{C_i}\right]^2}{(N-P)}}$$

Where:
N = Number of points in the curve
P = Number of parameters in the curve (= 1 for average response factor, 2 for linear, 3 for quadratic)
C_I = True concentration for level i
PC_i = Predicted concentration for level i

Note: When average response factors are used, % RSE is equivalent to % RSD.

10.9. The following requirements must be met for any calibration to be used.

- Response must increase with increasing concentration.
- If a curve is used, the calculated intercept of the curve at zero response must be less than ± the reporting limit for the analyte.
- The average Relative Standard Error (RSD for average response factors) of the calibration points from the curve used must be ≤ 20%.
- Some data systems will not measure the %RSE from a linear or quadratic fit. For the linear case, the correlation coefficient may be used as an alternative to the %RSE, and must be greater than or equal to 0.990. For the quadratic case the Coefficient of Determination may be used, and must be greater or equal to 0.990.

  Note: The Relative Standard Error (RSE) is superior to the Correlation Coefficient (r) and Coefficient of Determination (r^2) for testing the fit of a set of calibration points to a line. The lower points on a curve have little effect on r. As a result, a curve may have a very good correlation coefficient (>0.995) while also having > 100% error at the low point.

10.10. Weighting of Data Points

10.10.1. In linear and quadratic calibration fits, the points at the lower end of the calibration curve have less absolute variance than points at the high concentration end of the curve. This can cause severe errors in quantitation at the low end of the calibration. However, in environmental analysis, accuracy at the low end of the curve is very important. For this reason, it is preferable to increase the weighting of the lower concentration points. $1/\text{Concentration}^2$ weighting (often called $1/X^2$ weighting) will improve accuracy at the low end of the curve and must be used if the data system has this capability.

10.11. Non-standard analytes are sometimes requested. For these analytes, it may be acceptable to analyze a single standard at the reporting limit with each continuing calibration rather than a five-point initial calibration. This action must be with client approval. If the analyte is detected in any of the samples, a five-point initial calibration must be generated, and the sample(s) re-analyzed for quantitation.

10.12. Calibration Verification

10.12.1. 12-hour Calibration

10.12.1.1. The working calibration curve or RF must be verified by the analysis of a mid point calibration standard at the beginning, after every 12 hours, and at the end of the analysis sequence.

10.12.2. Calibration Verification

10.12.2.1. It may be appropriate to analyze a mid-point standard more frequently than every 12 hours. If these calibration verification standards are analyzed, requirements are the same as the 12-hour calibration with the exception that retention times are not updated.

10.12.2.2. Any individual compounds with % D < 15% meet the calibration criteria. The calibration verification is also acceptable if the average of the % D for all the analytes is < 15%. This average is calculated by summing the entire absolute % D results in the calibration (including surrogates) and dividing by the number of analytes. Only ND or results below the RL are reported. Any analyte that is reportable as found must have a % difference of < 15% in the calibration verification or 12-hour calibration on the column used for quantitation. Refer to Section 12.1.2 for which result to report.

Company Confidential & Proprietary

10.12.3. An ICV is analyzed immediately after an initial calibration. The acceptance criteria is ± 15% for TCL analytes and ± 30% for all other analytes. If this is not met, a new initial calibration curve is analyzed.

10.12.4. It is not necessary to run a calibration verification standard at the beginning of the sequence if samples are analyzed immediately after the completion of the initial calibration.

10.12.5. Samples quantitated by external standard methods must be bracketed by calibration verification standards that meet the criteria listed above. The bracketing standards on the column used for calibration must meet the same criteria as the opening standards. Bracketing is not necessary for internal standard methods.

10.12.6. If the analyst notes that a CCV has failed and can document the reason for failure (e.g., no purge, broken vial, carryover from the previous sample etc.), then a second CCV may be analyzed without any adjustments to the instrument. If this CCV meets criteria, then the preceding samples have been successfully bracketed. If adjustments to the instrument are performed before the repeat CCV, then the proceeding samples have not been successfully bracketed; but analysis may continue.

10.12.7. In general, it is not advisable to analyze repeat CCVs on unattended runs. If repeat CCVs are analyzed, then the first must serve as the bracketing standard for the preceding samples and the last must serve as the CCV for the following samples.

10.12.8. If highly contaminated samples are expected, it is acceptable to analyze blanks or primers at any point in the run.

10.12.9. Percent Difference Calculation

10.12.9.1. Percent difference for internal and external methods is calculated as follows:

Internal Standard

$$\%D = \frac{RF_c - \overline{RF}}{\overline{RF}} \times 100$$

External standard

$$\%D = \frac{CF_c - \overline{CF}}{\overline{CF}} \times 100$$

Where: RF_c and CF_c are the response and calibration factors from the continuing calibration

$\overline{RF}$ and $\overline{CF}$ are the average response & calibration factors from the initial calibration

10.12.10. Percent Drift Calculation

10.12.10.1. Percent drift is used for comparing the continuing calibration to a linear or quadratic curve. The criteria for percent drift are the same as for percent difference

$$\%\ Drift = \frac{Calculated\ Conc. - Theoretical\ Conc.}{Theoretical\ Conc.} \times 100\%$$

10.12.10.2. Corrective Actions for Continuing Calibration

10.12.10.3. If the overall average percent drift of all analytes is greater than ± 15%, corrective action must be taken. This may include clipping the column, changing the liner, or other minor instrument adjustments, followed by re-analyzing the standard. If the overall average percent drift still varies by more than ± 15%, a new calibration curve must be prepared.

10.12.10.4. Corrective Action for Samples

10.12.10.4.1. For internal standard methods, any samples injected after a standard not meeting the calibration criteria must be re-injected.

10.12.10.4.2. For external standard methods, any samples injected after the last good continuing calibration standard must be re-injected.

10.12.10.4.3. If the average percent drift for all the analytes in the calibration is over 15%; but all of the analytes requested for a particular sample have percent drift ≤ 15%, then the analysis is acceptable for that sample.

11. PROCEDURE

11.1. Extraction

11.1.1. Extraction procedures are referenced in the SOP NC-OP-032, current revision.

11.2. Cleanup

11.2.1. Cleanup procedures are referenced in the SOP NC-OP-025, current revision.

11.3. Gas Chromatography

11.3.1. Chromatographic conditions for individual methods are presented in the appendices.

11.4. Sample Introduction

11.4.1. In general, volatiles analytes are introduced using Purge and Trap as described in Appendix A.

11.4.2. Semivolatile analytes are introduced by direct injection of the extract. Samples, standards, and QC must be introduced using the same procedure.

11.5. Analytical Sequence

11.5.1. An analytical sequence starts with an initial calibration or a calibration verification. Refer to the individual method appendices (Appendices A, B, C, D, and E) for method-specific details of calibration verifications and analytical sequences.

11.5.2. The calibration verification includes analysis of standards containing all single response analytes and updating the retention time windows.

11.5.3. If there is a break in the analytical sequence of greater than 12 hours, a new analytical sequence must be started with a calibration verification.

11.6. Retention Time Windows

11.6.1. Retention time windows must be determined for all analytes. Make an injection of all analytes of interest each day over a three-day period. Calculate the standard deviation of the three retention times for each analyte (relative retention times may also be used). For multi-response analytes

(e.g., Aroclors), use the retention time of major peaks. Plus or minus three times the standard deviation of the retention times of each analyte defines the retention time window.

11.6.2. The center of the retention time window is the retention time from the last of the three standards. The centers of the windows are updated with the mid-point of the initial calibration and each 12-hour calibration. The widths of the windows must remain the same until new windows are generated following the installation of a new column.

11.6.3. If the retention time window as calculated above is less than ± 0.05 minutes, use a retention time window appropriate for the analysis and run time. This allows for slight variations in retention times caused by sample matrix.

11.6.4. The laboratory must calculate new retention time windows each time a new column is installed. The new windows must be generated within one week of the installation of the new column. Until these standards have been run on the new column, the retention time windows from the old column may be used, updated with the retention times from the new initial calibration.

11.6.5. Retention time studies are filed in the laboratory.

11.6.6. Corrective Action for Retention Times

11.6.6.1. The retention times of all compounds in the 12-hour calibration or calibration verification standard must be within the retention time window. If this condition is not met, all samples analyzed after the last compliant standard must be re-analyzed, unless the following conditions are met for any compound that elutes outside the retention time window.

11.6.6.2. The retention time of that compound in the standard must be within a retention time range equal to twice the original window.

11.6.6.3. No peak that would be reportable must be present on the sample chromatogram within an elution time range equal to three times the original retention time window.

11.7. Daily Retention Time Windows

11.7.1. The center of the retention time windows determined in Section 11.6 is adjusted to the retention time of each analyte as determined in the 12-hour calibration standards or continuing calibration verification standards. (See Methods 8081A and 8082 Appendices B and C for exceptions for multi-response components.) The retention time windows must be updated at the beginning of each analytical sequence and with each 12-hour calibration or continuing calibration verification.

11.8. Procedural Variations

11.8.1. Procedural variations are allowed only if deemed necessary in the professional judgment of the supervisor to accommodate variation in sample matrix, chemistry, sample size, or other parameters. Any variation in procedure must be completely documented using a Nonconformance Memo and approved by a supervisor and QA/QC Manager. The Nonconformance Memo must be filed in the project file. The nonconformance is also addressed in the case narrative. Any unauthorized deviations from this procedure must also be documented as a nonconformance with a cause and corrective action described. Procedural deviations are not allowed for Ohio VAP Projects.

12. DATA ANALYSIS AND CALCULATIONS

12.1. Qualitative Identification

12.1.1. Tentative identification occurs when a peak is found within the retention time window for an analyte, at a concentration above the reporting limit, or above the MDL if J flags are required. Normally confirmation is required on a second column; but if the detector is sufficiently specific or if the sample matrix is well enough defined, single column analysis may be adequate. In some cases, GC/MS confirmation may be required. Client-specific requirements may also define the need for second column confirmation and/or GC/MS confirmation. Refer to the appendices for test specific requirements for confirmation. Identification is confirmed if a peak is also present in the retention time window for that analyte on the confirmatory column at a concentration greater than the reporting limit (MDL if J flag confirmation required). Identified compounds are reviewed for proper integration. Manual integrations are performed if necessary and are documented by the analyst or automatically by the data system. Many programs require chromatograms before and after manual integration. Additional information on manual integration can be found in SOP CA-Q-S-002.

12.1.2. Dual column quantitation

For confirmed results, two approaches are available to the analyst:
A) the primary column approach, or
B) the better result approach
Both are acceptable to avoid the reporting of erroneous or unconfirmed data.

12.1.2.1. Primary column approach

12.1.2.2. The result from the primary column is normally reported. The result from the secondary column is reported if any of the following three bulleted possibilities are true.

- There is obvious chromatographic interference on the primary column
- The result on the primary column is > 40% greater than the result on the secondary column
- Continuing or bracketing standard fails on the primary column but is acceptable on the secondary column. (If the primary column result is > 40% higher than the secondary and the primary column calibration fails, then the sample must be evaluated for re-analysis.)

12.1.2.3. Better result approach

The higher of the two results is normally reported. The higher result is considered better because the higher result is generally higher because of chromatographic interference. For Ohio VAP projects, both columns must meet calibration criteria. The lower result is reported if any of the following two bulleted possibilities are true.

- There is obvious chromatographic interference on the column with the higher result
- The continuing or bracketing calibration on the column with the higher result fails. (If the higher result is > 40% higher and the calibration on the column with the lower result fails, then the sample must be evaluated for re-analysis.)

12.1.3. If the Relative Percent Difference (RPD) between the response on the two columns is greater than 40%, or if the opinion of an experienced analyst is that the complexity of the matrix is resulting in false positives, the confirmation is suspect and the results are qualified. RPD is calculated using the following formula:

$$RPD = \frac{|R_1 - R_2|}{\frac{1}{2}(R_1 + R_2)}$$

Where R=Result

12.1.4. Multi-response Analytes

12.1.4.1. For multi-response analytes, the analyst must use the retention time window, but must rely primarily on pattern recognition. The pattern of peaks will normally serve as confirmation.

12.1.5. The experience of the analyst must weigh heavily in the interpretation of the chromatogram. For example, sample matrix or laboratory temperature fluctuation may result in variation of retention times.

12.2. Calibration Range

12.2.1. If concentrations of any analytes exceed the working range as defined by the calibration standards, then the sample must be diluted and re-analyzed. Dilutions must target the most concentrated analyte in the upper half (over 50% of the high level standard) of the calibration range. It may be necessary to dilute samples due to matrix.

12.3. Dilutions

12.3.1. Samples may be screened to determine the appropriate dilution for the initial run. If the initial diluted run has no hits or hits below 20% of the calibration range and the matrix allows for analysis at a lesser dilution, then the sample must be re-analyzed at a dilution targeted to bring the largest hit above 50% of the calibration range.

12.3.1.1. Guidance for Dilutions Due to Matrix

If the sample is initially run at a dilution and only minor matrix peaks are detected, then the sample must be re-analyzed at a more concentrated dilution. Analyst judgement is required to determine the most concentrated dilution that will not result in instrument contamination.

12.3.2. Reporting Dilutions

12.3.2.1. The most concentrated dilution with no target compounds above the calibration range must be reported. Other dilutions may be reported at client request if the lower dilutions will not cause detector saturation, column overload, or carryover. Analyst judgement and client site history will be factors in the reporting of dual dilutions.

12.4. Interferences

12.4.1. If peak detection is prevented by interferences, further cleanup must be attempted. If no further cleanup is reasonable, then elevation of reporting levels and/or lack of positive identification must be addressed in the case narrative.

12.5. Internal Standard Criteria

12.5.1. If internal standard calibration is used, then the internal standard response in a continuing calibration standard must be within 50 to 150% of the response in the mid level of the initial calibration.

12.5.2. The internal standard response in samples must be within 50-150% of the response of previous continuing calibration standard.

12.6. Calculations

12.6.1. Capabilities of individual data systems may require the use of different formulas than those presented here. When this is the case, the calculations used must be shown to be equivalent and must be documented in an appendix attached to this document.

12.6.2. External Standard Calculations

12.6.2.1. Aqueous samples

$$Concentration\ (mg/L) = \frac{(A_x \times V_t \times D_f)}{(CF \times V_i \times V_s)}$$

Where:

A_x = Response for the analyte in the sample
V_i = Volume of extract injected, µL
D_f = Dilution factor
V_t = Volume of total extract, µL
V_s = Volume of sample extracted or purged, mL
CF = Calibration factor, area or height/ng

12.6.2.2. Non-aqueous Samples

$$Concentraibn\ (mg/kg) = \frac{(A_x \times V_t \times D_f)}{(CF \times V_i \times W)}$$

Where:

W = Weight of sample extracted or purged, g

12.6.2.3. Internal Standard Calculations

12.6.2.4. Aqueous Samples

$$Concentration\ (mg/L) = \frac{(A_x \times C_{is} \times D_f)}{(A_{is} \times RF \times V_s)}$$

Where:

C_{is} = Amount of internal standard added, ng
A_{is} = Response of the internal standard
RF = Response factor for analyte

12.6.2.5. Non-aqueous Samples

$$Concentration\ (mg/kg) = \frac{(A_x \times C_{is} \times D_f)}{(A_{is} \times RF \times W \times D)}$$

12.6.3. Surrogate Recovery

12.6.3.1. Concentrations of surrogate compounds are calculated using the same equations as for the target compounds. The response factor from the initial calibration is used. Surrogate recovery is calculated using the following equation.

Company Confidential & Proprietary

$$\%\ \text{Recovery} = \frac{Concentration\ (or\ amount)\ found}{Concentration\ (or\ amount)\ spiked} \times 100$$

12.6.4. Additional equations and calculations are listed in the following SOPs: Calibration Curves (General), CA-Q-S-005, and Selection of Calibration Points, CA-T-P-002

13. METHOD PERFORMANCE

13.1. Method Detection Limit

13.1.1. Each laboratory must generate a valid method detection limit for each analyte of interest. The MDL must be below the reporting limit for each analyte. The procedure for determination of the method detection limit is given in 40 CFR Part 136, Appendix B, and further defined in SOPs NC-QA-021 and CA-Q-S-006.

13.2. Initial Demonstration

13.2.1. Each laboratory must make a one-time initial demonstration of capability for each individual method. Demonstration of capability for both soils and water matrices is required. This requires analysis of QC check samples containing all of the standard analytes for the method. For some tests, it may be necessary to use more than one QC check mix to cover all analytes of interest.

13.2.1.1. Four aliquots of the QC check sample are analyzed using the same procedures used to analyze samples, including sample preparation. The concentration of the QC check sample must be equivalent to a mid-level calibration.

13.2.1.2. Calculate the average recovery and standard deviation of the recovery for each analyte of interest. Compare these results with the acceptance criteria given in each appendix.

13.2.1.3. If any analyte does not meet the acceptance criteria, the test must be repeated. Only those analytes that did not meet criteria in the first test need to be evaluated. Repeated failure for any analyte indicates the need for the laboratory to evaluate the analytical procedure and take corrective action.

13.3. Training Qualification

13.3.1. The Group/Team Leader has the responsibility to ensure an analyst who has been properly trained in its use and has the required experience performs this procedure.

14. POLLUTION PREVENTION

14.1. It is TestAmerica's policy to evaluate each method and look for opportunities to minimize waste generated (i.e., examine recycling options, ordering chemicals based on quantity needed, preparation of reagents based on anticipated usage, and reagent stability). Employees must abide by the policies in Section 13 of the Corporate Environmental Health and Safety Manual (CW-E-M-001) for "Waste Management and Pollution Prevention".

15. WASTE MANAGEMENT

15.1. All waste must be disposed of in accordance with Federal, State and Local regulations. Where reasonably feasible, technological changes have been implemented to minimize the potential for pollution of the environment. Employees must abide by this method and the policies in Section 13 of the Corporate

Environmental Health and Safety Manual (CW-E-M-001) for "Waste Management and Pollution Prevention."

15.2. Waste Streams Produced by the Method.

15.2.1. The following waste streams are produced when this method is carried out.

15.2.1.1. Vials containing sample extracts. These vials are placed in the vial waste located in the GC/MS laboratory.

15.2.1.2. **Tubes containing sample extracts for TPH, Pesticides, PCBs and Herbicides**. These capped tubes are placed in the PCB/flammable waste located the GC prep laboratory.

15.2.1.3. Samples, standards, and all extraction materials contaminated with high levels (>50ppm) of PCB's must be segregated into their own waste stream. PCB wastes are collected in one of three waste streams, solid PCB, liquid PCB and PCB vial waste. PCB containing samples are located through a LIMS query and disposed of as PCB containing.

15.2.1.4. **Extracted solid samples contaminated with methylene chloride/acetone or acetone/hexane.** These materials are disposed of in the solid waste and debris in a red container located in the Extractions Lab.

15.2.1.5. **Discarded samples**. These samples are collected in the solid debris drum.

16. REFERENCES

16.1. Test Methods for Evaluating Solid Waste, Physical/Chemical Methods, SW846, 3rd Edition, Final Update III, December 1996, and Section 8000B

16.2. TestAmerica North Canton Quality Assurance Manual (QAM), current version

16.3. TestAmerica Corporate Environmental Health and Safety Manual, CW-E-M-001, and TestAmerica North Canton Facility Addendum and Contingency Plan, current version

16.4. Revision History

Historical File:		Revision 2.1: 08/12/96		Revision 5.7: 10/01/03
(formerly CORP-GC-0001NC)		Revision 3.0: 12/01/97		Revision 5.8: 02/06/06
		Revision 5.3: 11/18/99		Revision 0: 01/21/08 (NC-GC-038)
		Revision 5.4: 11/10/00		
		Revision 5.5: 03/16/01		
		Revision 5.6: 05/25/01		

16.5. Associated SOPs and Policies, current version

16.5.1 QA Policy QA-003

16.5.2 Glassware Washing, NC-QA-014

16.5.3 Statistical Evaluation of Data and Development of Control Charts, NC-QA-018

16.5.4 Method Detection Limits and Instrument Detection Limits, CA-Q-S-006 and NC-QA-021

16.5.5 Standards and Reagents, NC-QA-017

16.5.6 Supplemental Practices for DoD Project Work, NC-QA-016

16.5.7 Acceptable Manual Integration Practices, CA-Q-S-002

16.5.8 Calibration Curves (General), CA-Q-S-005

16.5.9 Section of Calibration Points, CA-T-P-002

17. MISCELLANEOUS

17.1. Modifications from Reference Method

17.1.1. Chapter 1 of SW-846 states the method blank must not contain any analyte of interest at, or above, the Method Detection Limit. This SOP states the Method Blank must not contain any analyte of interest at, or above, the reporting limit. Common lab contaminants are allowed to be up to five times the reporting limit in the blank following consultation with the client.

17.2. Flow Diagrams

17.2.1. Initial demonstration and MDL

Company Confidential & Proprietary

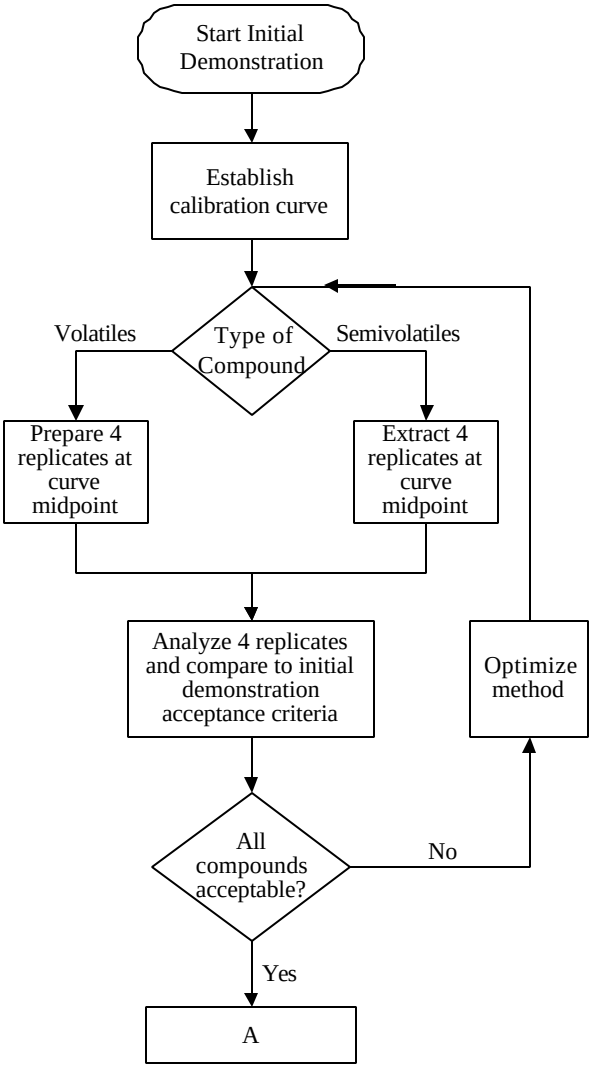
Start Initial Demonstration
Establish calibration curve
Type of Compound
Volatiles
Semivolatiles
Prepare 4 replicates at curve midpoint
Extract 4 replicates at curve midpoint
Analyze 4 replicates and compare to initial demonstration acceptance criteria
Optimize method
All compounds acceptable?
No
Yes
A

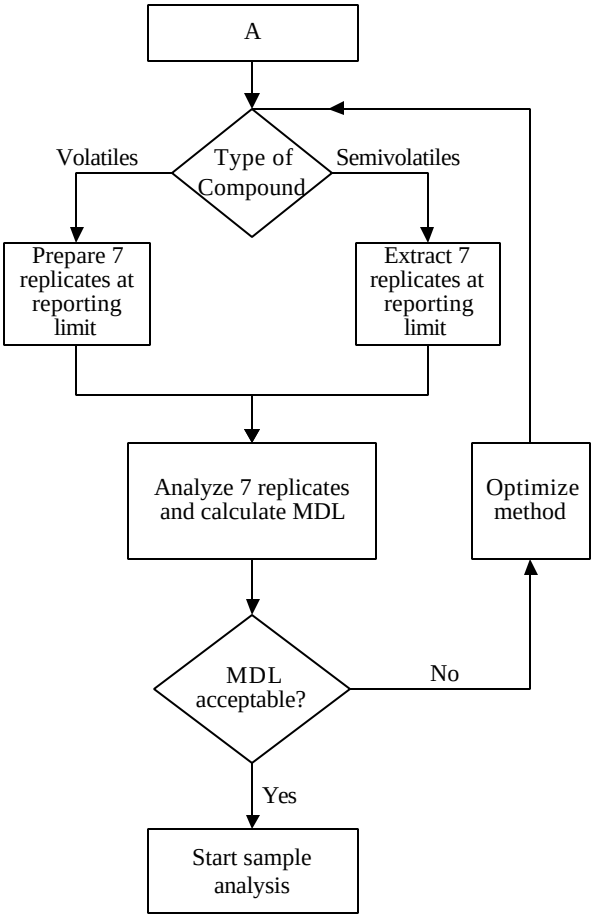
A
Type of Compound
Volatiles
Semivolatiles
Prepare 7 replicates at reporting limit
Extract 7 replicates at reporting limit
Analyze 7 replicates and calculate MDL
Optimize method
MDL acceptable?
No
Yes
Start sample analysis

17.2.2 Sample Analysis [1]

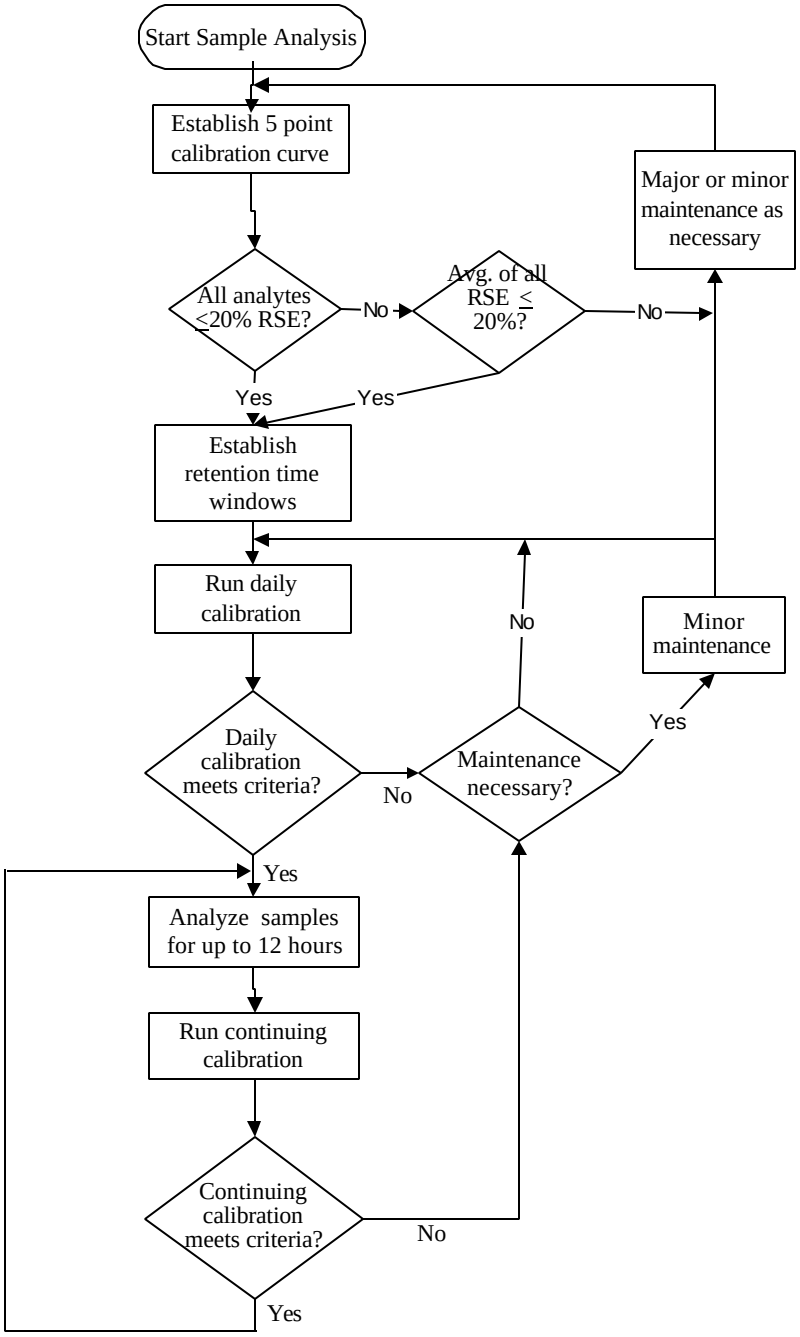

[1] This flow diagram is for guidance and cannot cover all eventualities. Consult the SOP text and a supervisor if in doubt.

1. SCOPE AND APPLICATION

1.1. This SOP Appendix describes sample preparation and extraction for the analysis of volatile organics by a Purge and Trap procedure following Method 8021B. All requirements of the 8000B section of this SOP must be met except when superseded by this Appendix. Refer to Table A1 for the individual analytes normally determined by these procedures. Routine reporting limits are listed in Table A1.

1.2. Compounds within the scope of this method have boiling points below 200°C and are insoluble or slightly soluble in water. Classes of compounds best suited to Purge and Trap analysis include low molecular weight halogenated hydrocarbons, aromatics, ketones, nitriles, acetates, acrylates, ethers, and sulfides.

1.3. Water samples and soils samples with low levels of contamination may be analyzed directly by purge-and-trap extraction and gas chromatography. Higher concentrations of these analytes in soil may be determined by the medium level methanol extraction procedure.

1.4. This method also describes the preparation of water-miscible liquids, non-water-miscible liquids, solids, wastes, and soils/sediments for analysis by the Purge and Trap procedure.

1.5. The associated LIMS method code is QR.

2. SUMMARY OF METHOD

2.1. An inert gas is bubbled through the sample at ambient temperature or at 40°C (40°C required for low-level soils), and the volatile components are transferred from the aqueous phase to the vapor phase. The vapor is swept through a sorbent column where the volatile components are adsorbed. After purging is completed, the sorbent column is heated and back-flushed with inert gas to desorb the components onto a gas chromatographic column. Analytes are detected using a photo-ionization detector, an electrolytic conductivity detector, or a combination of both.

2.2. For soil samples, a portion of the sample is dispersed in methanol to dissolve the volatile organic constituents. A portion of the methanolic solution is combined with water. It is then analyzed by Purge and Trap GC following the normal water method.

3. DEFINITIONS

3.1. Refer to the TestAmerica North Canton Quality Assurance Manual (QAM), current version, for definitions of terms used in this document.

4. INTERFERENCES

4.1. Refer to Section 4 of the Method 8000B part of this SOP for general information on chromatographic interferences.

4.2. Impurities in the purge gas and from organic compounds out-gassing from the plumbing ahead of the trap, account for the majority of contamination problems. The analytical system must be demonstrated to be free from contamination under the conditions of the analysis by running laboratory reagent blanks. The use of non-TFE plastic tubing, non-TFE thread sealants, or flow controllers with rubber components in the purging device must be avoided.

4.3. Samples can be contaminated by diffusion of volatile organics (particularly methylene chloride and fluorocarbons) through the septum seal of the sample vial during shipment and storage. A trip blank prepared from organic-free reagent water and carried through sampling and handling protocols serves as a check on such contamination.

Company Confidential & Proprietary

4.4. Contamination by carryover can occur whenever high-concentration and low-concentration samples are analyzed sequentially. Whenever an unusually concentrated sample is analyzed, it must be followed by an analysis of organic-free reagent water to check for cross-contamination. The trap and other parts of the system are subject to contamination. Therefore, frequent bake-out and purging of the system may be required.

4.5. A holding blank is kept in the sample refrigerator. This is analyzed and replaced every seven days. If the holding blank does not meet the method blank criteria, the source of contamination must be found and corrected. Evaluation of all samples analyzed in the seven-day period prior to the analysis of the contaminated holding blank is required. Refer to SOP NC-QA-020 for additional information on holding blanks.

4.6. Acidification of samples may result in hydrolysis of 2-chloroethyl-vinyl ether.

5. SAFETY

5.1. Refer to Section 5 of the Method 8000B section of this SOP for general safety requirements.

5.2. The following method analytes have been tentatively classified as known or suspected human or mammalian carcinogens: Benzene, Carbon Tetrachloride, 1,4-Dichlorobenzene, 1,2-Dichloroethane, Hexachlorobutadiene, 1,1,2,2-Tetrachloroethane, 1,1,2-Trichloroethane, Chloroform, 1,2-Dibromoethane, Tetrachloroethene, Trichloroethene, Vinyl Chloride. Pure standard materials and stock standard solutions of these compounds must be handled in a hood.

5.3. GC VOA instruments use an ultraviolet (UV) light source, which must be shielded from view.

6. EQUIPMENT AND SUPPLIES

6.1. Microsyringes – 5 µL, 10µL, 25µL, 100µL, 250µL, 500µL, and 1000µL. These must be equipped with a 20 gauge (0.006" ID) needle. These must be used to measure and dispense methanolic solutions and aqueous samples.

6.2. Gas tight syringes -- 5 mL. Used for measuring sample volumes.

6.3. Purge and Trap Apparatus -- A device capable of extracting volatile compounds, trapping on a sorbent trap, and introducing onto a gas chromatograph.

6.4. Purge and Trap Autosampler -- In order to maintain high sample throughput, an autosampler is highly recommended.

6.5. Trap -- The trap used is dependent on the class of compound to be analyzed. Refer to Table A2 for suggested traps for specific tests.

6.6. Purge Vessels -- These are dependent on the purge and trap unit/autosampler used. Both disposable culture tubes (needle sparge units) and specially designed vessels with fritted bottoms may be used. Follow the manufacturer's suggestions for configuration.

6.7. Columns -- Refer to Table A2 for details of columns

6.8. Volumetric flasks, Class A -- 5 mL to 250 mL

6.9. pH paper: Range 0-14

6.10. Balance capable of weighing to 0.01g for samples

6.11. Chlorine test strips

6.12. Hach chlorine test pillows

6.13. Mechanical pipettes: 10 mL and 20 mL

7. REAGENTS AND SUPPLIES

7.1. Refer to the Method 8000B section of this SOP for general requirements for reagents and supplies.

7.2. Organic-Free Water

7.2.1. Organic-free water is defined as water in which an interferent is not observed at the reporting limit of the compounds of interest. The laboratory method for generating organic free water is continuously sparging water with helium or nitrogen.

7.3. Methanol -- Purge and Trap Grade

7.4 n-Propanol – ultra high

7.5 Standards

7.5.1 Refer to Tables A3 for details of surrogate, matrix spiking, and internal standards. Calibration standard levels are not specified, since they may depend on the sensitivity and linear range of specific detectors. However, the low-level standard must be equivalent to the reporting limits specified in Table A1.

7.5.2 Volatile standards are prepared by injecting a measured volume of the stock standard into a volumetric flask containing the appropriate volume of methanol. See the Standards Logbook for details on sample preparation.

8. SAMPLE COLLECTION, PRESERVATION, AND STORAGE

8.1. Holding times for all volatile analysis are 14 days from sample collection to analysis.

8.2. Water samples are normally preserved at pH < 2 with 1:1 hydrochloric acid. Unpreserved samples must be analyzed within seven days from sample collection if aromatic compounds are requested.

8.3. Solid samples are field preserved with methanol for medium-level analysis. Soil samples can also be taken using the EnCore™ sampler and preserved in the lab within 48 hours of sampling. At specific client request, unpreserved soil samples may be accepted.

8.4. There are several methods of sampling soil. The recommended method, which provides the minimum of field difficulties, is to take an EnCore™ sample. (The 5g or 25g sampler can be used, depending on client preference). Following shipment back to the lab the soil is preserved in methanol. This is the medium-level procedure. If very low detection limits are needed (< 50 µg/kg for most analytes), then it will be necessary to use two additional 5g EnCore™ samplers or to use field preservation.

8.5. Sample collection for medium-level analysis using EnCore™ samplers.

8.5.1. Ship one 5g (or 25g) EnCore™ sampler per field sample position.

8.5.2. An additional bottle must be shipped for percent moisture determination.

8.5.3. When the samples are returned to the lab, extrude the (nominal) 5g (or 25g) sample into a tared VOA vial containing 5 mL methanol (25 mL methanol for the 25g sampler). Obtain the weight of

the soil added to the vial and note on the label.

8.5.4. Add the correct amount of surrogate spiking mixture. (Add 1 µL of a 50 µg/mL solution for a nominal 5g sample, 500 µL for a medium level prep sample, 500 µL for a waste prep, and 2.5 mL for a 25g soil sample.)

8.5.5. Add the correct amount of matrix spiking solution to the matrix spike and matrix spike duplicate samples. (Add 10 µL of a 10 µg/mL solution for a nominal 5g sample, 500 µL for a medium level prep sample, 500 µL for a waste prep, and 2.5 mL for a 25g soil sample.) The addition of spike introduces a slight error (0.4%), which can be neglected, into the calculations.

8.5.6. Prepare an LCS/LCSD for each batch by adding the correct amount of matrix spiking solution to clean methanol. (Add 10 µL of a 10 µg/mL solution for a nominal 5g sample, 500 µL for a medium level prep sample, 500 µL for a waste prep, and 2.5 mL for a 25g soil sample.)

8.5.7. Method blanks are prepared using 5 g of Ottawa sand, 5mL of reagent waster, and a stir bar.

8.5.8. Shake the samples for two minutes to distribute the methanol throughout the soil.

8.5.9. Allow to settle and store in a clean Teflon®-capped vial at 4 +/-2°C until analysis.

8.6. Sample collection for medium level analysis using field methanol preservation

8.6.1. When the samples are returned to the lab, obtain the weight of the soil added to the vial and note on the label.

8.6.2. Add the correct amount of surrogate spiking mixture. (Add 100 µL of 250 µg/mL solution for a nominal 25g sample, 20µL for a nominal 5g sample.)

8.6.3. Add the correct amount of matrix spiking solution to the matrix spike and matrix spike duplicate samples. (Add 100 µL of 250 µg/mL solution for a nominal 25g sample, 20µL for a nominal 5g sample.) The addition of spike introduces a slight error (0.4%), which can be neglected, into the calculations.

8.6.4. Prepare an LCS/LCSD for each batch by adding the correct amount of matrix spiking solution to clean methanol. (100 µL of spike to 25 mL methanol or 20 µL spike to 5 mL methanol).

8.6.5. For medium level Method Blanks, prepare 5 mL of methanol, 50uL of surrogate and 5 g of Ottawa sand in a 20 mL vial.

8.6.6. Shake the samples for two minutes to distribute the methanol throughout the soil.

8.6.7. Allow to settle and store in a clean Teflon®-capped vial at 4 +/-2°C until analysis.

8.7. Aqueous samples are stored in glass containers with Teflon®-lined septa at 4°C ± 2°C with minimum headspace. For volatile water samples, the method blank consists of reagent water

8.8. Medium-level solid extracts are aliquoted into 2 - 5 mL glass vials with Teflon®-lined caps and stored at 4°C ± 2°C. The extracts are stored with minimum headspace.

8.9. The maximum holding time is 14 days from sampling until the sample is analyzed. Maximum holding time for the EnCore™ sampler (before the sample is added to methanol) is 48 hours.

8.10. A holding blank is stored with the samples. This is analyzed and replaced if any of the trip blanks show any contamination. Otherwise, it is replaced every 14 days.

Company Confidential & Proprietary

EnCore procedure when low level is not required (field steps in gray)

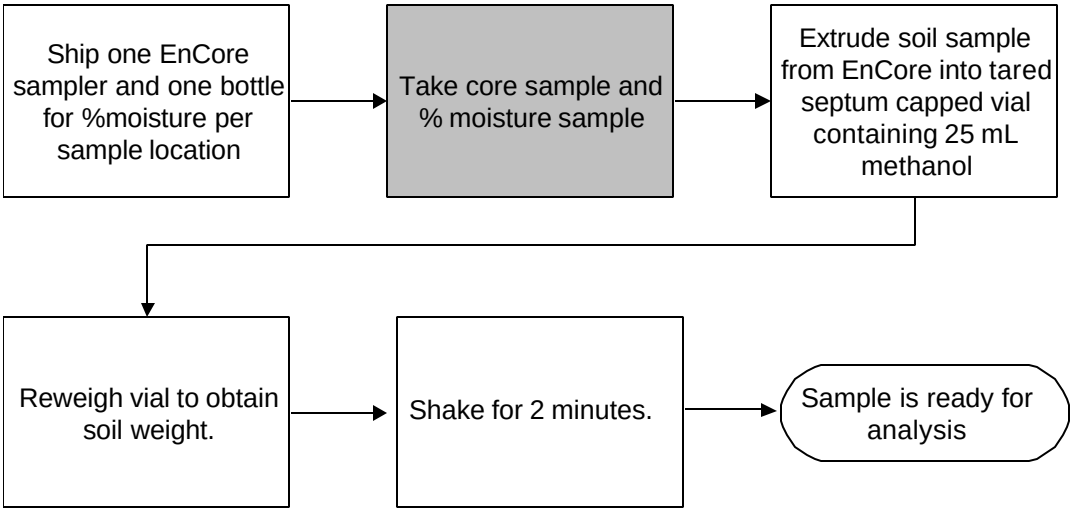

Field methanol extraction procedure (field steps in gray)

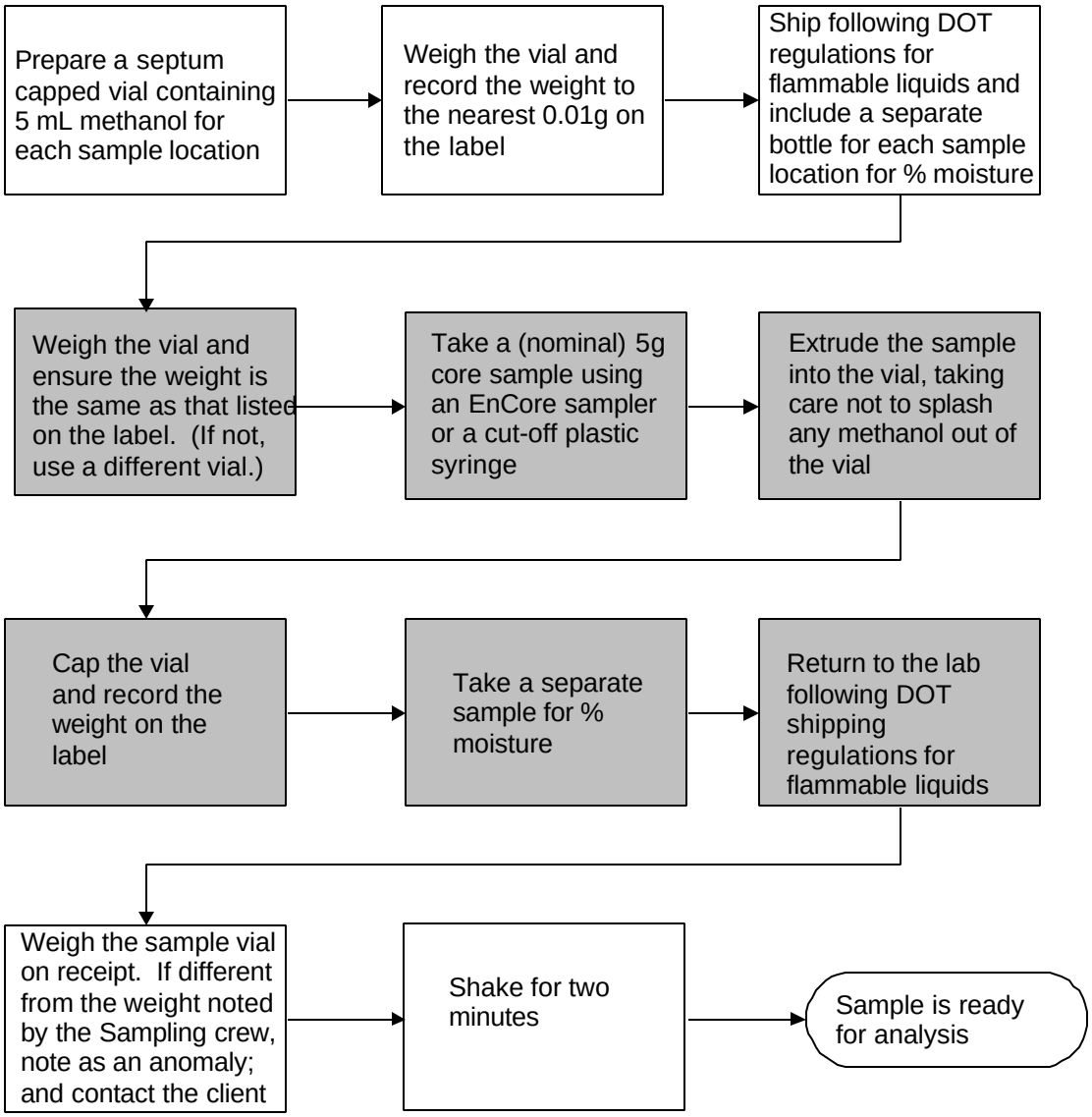

9. QUALITY CONTROL

9.1. Refer to the Method 8000B section of this SOP (Section 9) for general quality control procedures, including batch definition, requirements for method blanks, LCS, matrix spikes, surrogates, and control limits.

10. CALIBRATION AND STANDARDIZATION

10.1. Refer to the Method 8000B section of this SOP (Section 10) for general calibration procedures.

10.2. Gas Chromatograph Operating Conditions

10.2.1. Various column configurations are possible. If dual column confirmation is necessary, the sample may be split using a Y splitter at the injector end to direct the sample to two columns and two detectors. For simultaneous determination of aromatic and halogenated volatiles, a single column is used and the PID and ELCD detectors are connected in series.

10.2.2. Refer to Table A2, A3, and A4 for GC operating conditions. Additional operating instruction may be found in instrument manuals located in the laboratory.

10.3. Initial Calibration

10.3.1. Refer to Section 10 of the Method 8000B section of this SOP for details of initial calibration criteria.

10.3.2. Low-level soil samples must be purged at 40°C; therefore the calibration curve must also be purged at 40°C.

10.3.3. The low-level calibration must be at the reporting limit or below. The remaining standards encompass the working range of the detector. See Table A5 for the I-cal level and amounts.

10.3.4. Calibrate the instrument using the same volume that will be used during sample analysis.

10.4. Initial Calibration Verification (ICV)

10.4.1. An initial calibration verification (ICV) standard is analyzed immediately following the initial calibration. Acceptance criteria is ± 15% for TCL analytes and ± 30% for all other analytes. If this is not met, a new initial calibration curve is analyzed.

10.5. Calibration Verification

10.5.1. A mid-level calibration standard is used for the calibration verification. The gases have 20% D criteria rather than the 15% used for other analytes. For analytes not listed in Method 8021B, the CCV criteria is 50% D.

10.5.2. A calibration verification run is performed after every ten samples or 12 hours for this method.

10.5.3. Bracketing of samples with calibration verification runs is only necessary for external standard analysis. Analytes are detected using a photo-ionization detector are quantitated using the internal standard method. Analytes detected using an electrolytic conductivity detector may be quantitated using either the internal or external method.

11. PROCEDURE

11.1. Refer to the Method 8000B section of this SOP for general procedural requirements.

Company Confidential & Proprietary

11.2. Analytical Sequence

11.2.1. The analytical sequence starts with an initial calibration of at least five points or a 12-hour calibration that meets % difference criteria from an existing initial calibration.

11.3. Confirmation

11.3.1. The PID and ELCD detectors are sufficiently selective that second column confirmation is not always necessary. Requirements for second column confirmation must be decided in consultation with the client. If the PID and ELCD are used in series, confirmatory information for many analytes can be gained by comparing the relative response from the two detectors.

11.4. Aqueous and Soil Sample Analysis (Autosampler Purge and Trap units that sample directly from the VOA vial)

11.4.1. Check the pH of the sample in the VOA vial prior to analysis. Samples are also checked for residual chlorine at this time.

11.4.2. Units, which sample from the VOA vial, should be equipped with a module, which automatically adds surrogate and internal standard solution, as needed, to the sample prior to purging the sample.

11.4.3. If the autosampler uses automatic IS/SS injection, no further preparation of the VOA vial is needed. Otherwise, the internal and surrogate standards must be added to the vial.
Note: Aqueous samples with high amounts of sediment present in the vial may not be suitable for analysis on this instrumentation, or they may need to be analyzed as soils.

11.4.4. Sample remaining in the vial after sampling with one of these mechanisms is no longer valid for further analysis. A fresh VOA vial must be used for further sample analysis.

11.5. Low-Level Solids Analysis using discrete autosamplers Bulk Solids

Note: This technique may seriously underestimate analyte concentration and must not be used except at specific client request for the purpose of comparability with previous data. It is no longer part of SW-846.

This method is based on purging a heated sediment/soil sample mixed with reagent water containing the surrogate and, if applicable, internal and matrix spiking standards. Analyze all reagent blanks and standards under the same conditions as the samples (e.g., heated). The calibration curve is also heated during analysis. Purge temperature is 40°C.

11.5.1. This procedure cannot be used for Ohio VAP samples. Refer to Section 1.4 for the appropriate procedure.

11.5.2. Do not discard any supernatant liquids. Mix the contents of the container

11.5.3. Weigh out 5g (or other appropriate aliquot) of sample into a disposable culture tube or40mL vial. Record the weight to the nearest 0.1g. If method sensitivity is demonstrated, a smaller aliquot may be used. Do not use aliquots less than 0.5g. If the sample is contaminated with analytes such that a purge amount less than 0.5g is appropriate, use the medium-level method described in Section 8.6, Appendix A.

11.5.4. Place in autosampler.

11.5.5. Add 5 mL of organic free water to each vial. Add surrogate/internal standard (and matrix spike solutions if required.) (See Table A3.) Add directly to the sample from Section 11.6.2.

11.5.6. The above steps must be performed rapidly and without interruption to avoid loss of volatile organics

11.6. Methanol Extract Soils

11.6.1. Take an appropriate aliquot from the sample prep container. Add to 5mL of organic free water in a 40 mL VOA vial. Turn off the automatic surrogate function on the autosampler. Place the sample in the autosampler and analyze as for aqueous samples. If less than 1µL of methanolic extract is to be added to the water, dilute the methanolic extract such that a volume greater than 1µL will be added to the water in the VOA vial.

12. DATA ANALYSIS AND CALCULATIONS

12.1. Refer to Section 12 of the Method 8000B section of this SOP. Refer to Tables A5 and A6 for details of the calibration curves.

13. METHOD PERFORMANCE

13.1. Performance limits for the four replicate initial demonstration of capability required under Section 13.1 of the Method 8000B section of this SOP.

14. POLLUTION PREVENTION

14.1. Refer to Section 14 of the 8000B section of this SOP

15. WASTE MANAGEMENT

15.1. Refer to Section 15 of the 8000B section of this SOP

15.2. Waste streams produced by the method.

15.2.1. The following waste streams are produced when this method is carried out.

15.2.1.1. **Acidic material from the auto-sampler.** Waste stream must be collected and neutralized before discharge to a sewer system if the pH is less than 4.

15.2.1.2. **Methanol waste standards**. Methanol waste is discarded as a flammable liquid.

15.2.1.3. **All samples including purged and extracted soils and waters:** Samples are collected in boxes and removed from the lab to storage. The waste coordinator handles crushing the vials and proper disposal.

16. REFERENCES

16.1. Test Methods for Evaluating Solid Waste, Physical/Chemical Methods, SW846, 3rd Edition, Final Update III, December 1996, Sections 5000, 5030B, 5035 and 8021B.

16.2. SW846, *Test Methods for Evaluating Solid Waste*, Third Edition, Closed System Purge and Trap and Extraction for Volatile Organics in Soil and Waste Samples, Method 5035, Rev 0, December 1996.

16.3. Laboratory Holding Blanks, NC-QA-020

17. MISCELLANEOUS

17.1. TABLES

Table A1

Standard Analyte List for Method 8021B

Compound	CAS No.	Reporting Limit, µg/L or µg/kg		
		Aqueous	Low Soil	Medium Soil
1,1,1,2-Tetrachloroethane	630-20-6	1.0		
1,1,1-Trichloroethane	71-55-6	1.0		
1,1,2,2-Tetrachloroethane	79-34-5	1.0		
1,1,2-Trichloroethane	79-00-5	1.0		
1,1-Dichloroethane	75-34-3	1.0		
1,1-Dichloroethene	75-45-4	1.0		
1,1-Dichloropropene	563-58-6	1.0		
1,2,3-Trichlorobenzene	87-61-6	1.0		
1,2,3-Trichloropropane	96-18-4	1.0		
1,2,4-Trichlorobenzene	120-82-1	1.0		
1,2,4-Trimethylbenzene	95-63-6	1.0	1.0	50
1,2-Dibromo-3-Chloropropane(DBCP)	96-12-8	1.0		
1,2-Dibromoethane(EDB)	106-93-4	1.0		
1,2-Dichlorobenzene	95-50-1	1.0		
1,2-Dichloroethane	107-06-2	1.0		
1,2-Dichloropropane	78-87-5	1.0		
1,3,5-Trimethylbenzene	108-67-8	1.0	1.0	50
1,3-Dichlorobenzene	541-73-1	1.0	1.0	50
1,3-Dichloropropane	142-28-9	1.0		
1,4-Dichlorobenzene	106-46-7	1.0	1.0	50
2,2-Dichloropropane	590-20-7	1.0		
2-Chloroethyl vinyl ether	110-75-8	5.0		
2-Chlorotoluene	95-49-8	1.0		
4-Chlorotoluene	106-43-4	1.0		
Acetone	67-64-1	10		
Benzene	71-43-2	1.0	1.0	50
Benzyl Chloride	100-44-7	5.0		
Bromobenzene	108-86-1	1.0		
Bromochloromethane	74-97-5	1.0		
Bromodichloromethane	75-27-4	1.0		
Bromoform	75-25-2	1.0		
Bromomethane	74-83-9	1.0		
Carbon Tetrachloride	56-23-5	1.0		
Chlorobenzene	108-90-7	1.0		
Chlorodibromomethane	124-48-1	1.0		
Chloroethane	70-00-3	1.0		

Company Confidential & Proprietary

Table A1

Standard Analyte List for Method 8021B

Compound	CAS No.	Reporting Limit, µg/L or µg/kg		
		Aqueous	Low Soil	Medium Soil
Chloroform	67-66-3	1.0		
Chloromethane	74-87-3	1.0		
cis-1,2 Dichloroethene	156-59-4	1.0		
cis-1,3-Dichloropropene	10061-01-5	1.0		
Dibromomethane	74-95-3	1.0		
Dichlorodifluoromethane	75-71-8	1.0		
Ethyl Benzene	100-41-4	1.0	1.0	50
Freon 113	76-13-1	1.0		
Hexachlorobutadiene	87-68-3	1.0		
Isopropylbenzene	98-82-8	1.0		
MEK (2-butanone)	78-93-3	5.0		
Methyl tert-butyl ether (MTBE)	1634-04-4	1.0		
Methylene Chloride	75-09-2	5.0		
MIBK (4-methyl-2-pentanone)	108-10-1	5.0		
Naphthalene	91-20-3	2.0	2.0	250
n-butylbenzene	104-51-8	1.0		
n-Propylbenzene	10306501	1.0		
p-Isopropyltoluene	99-87-6	1.0		
sec-Butylbenzene	135-98-8	1.0		
Styrene	100-42-5	1.0		
tert-Butylbenzene	98-06-6	1.0		
Tetrachloroethene	127-18-4	1.0		
Toluene	108-88-3	1.0	1.0	50
trans-1,2-Dichloroethene	156-60-5	1.0		
trans-1,3-Dichloropropene	10061-02-6	1.0		
Trichloroethene	79-01-6	1.0		
Trichlorofluoromethane	75-69-4	1.0		
Vinyl Chloride	75-01-4	1.0		
Xylenes (total)	1330-20-7	1.0	1.0	50

Company Confidential & Proprietary

Table A2 **Recommended Conditions for Method Combined Aromatic and Halogenated Volatiles**	
Parameter	Recommended Conditions
Temperature program	35°C, 12 min, then 4°C/min to 200°C, hold for 5 min
Column 1	DB-VRX or RTX-502.2 105m x 0.53 mm id df = 3.0um
Column 2	DB-1 or RTX-1 105m x 0.53 mm ID df = 3.0um
Column 3	RTX - Volatiles 120m x 0.53mm ID df=2.0um
Carrier gas	Hydrogen
Purge Flow / time	40 mL/min, 11 minutes
Desorb Temp / time	180°C, 2 minutes (220°C for Vocarb 3000)
Bake Time / temp	200°C, 12 minutes (230°C for Vocarb 3000)
Transfer line / valve temp	115°C

Table A3 **Surrogate and Internal Standard Concentrations**				
Standard	Components	Working Solution µg/mL	Spike amount µL	Final concentration µg/L (µg/kg)
Combined aromatic and halogenated volatiles IS/SS	Fluorobenzene (SS)	50	1	10
	1,4-Dichlorobutane (SS)	50	1	10
	a,a,a-Trifluorotoluene	50	1	10

It may be necessary to select different surrogates in order to minimize sample interferences. 1-chloro-4-fluorobenzene is fairly well resolved from analytes listed in this SOP. Other surrogates that may be considered, and issues associated with their use are:

1-Chloro-2-fluorobenzene: Elutes close to ethylbenzene on DB-1 or Rtx-1 and close to m,p-xylene on 502.2

Bromofluorobenzene: Close to 1,1,2,2-trichloroethane and 1,2,3-trichloropropane on the 502.2 column. Good on DB-1 or Rtx-1.

2-Bromo-1-chloropropane: May coelute with 1,1,2-trichloroethane

Table A4				
Concentrations for LCS and MS/MSD compounds				
Standard	Components	Working Solution µg/mL	Spike amount µL	Final concentration µg/L (µg/kg)
Aromatic	Benzene	10	10	20
	Toluene	10		20
	Chlorobenzene	10		20
Halogenated	Chlorobenzene	10	10	20
	1,1-Dichloroethene	10		20
	Trichloroethene	10		20
Combination aromatic / Halogenated	Benzene	10	10	20
	Toluene	10		20
	Chlorobenzene	10		20
	1,1-Dichloroethene	10		20
	Trichloroethene	10		20

Table A5		
Initial Calibration for Water Anlaysis		
Cal Level	**On Column Amount (ng)**	**Final Concentration (ng/L)**
1	2.5	0.5
2	5	1
3	10	2
4	20	4
5	50	10
6	100	20
8	200	40
10	400	80

Table A6		
Soil or Water Heated Initial Calibration Curve		
Cal Level	**On Column Amount (ng)**	**Final Concentration (ng/L)**
1	2.5	0.5
2	5	0.1
3	10	2
5	50	10
6	100	20
7	200	40
8	400	80

Company Confidential & Proprietary

1. SCOPE AND APPLICATION

1.1. This SOP Appendix describes procedures to be used when SW-846 Method 8081A is applied to the analysis of organochlorine pesticides by GC/ECD. This appendix may also to be applied when discontinued SW-846 Method 8080A is requested, and is applicable to extracts derived from any matrix which are prepared according to the appropriate sample extraction SOPs (NC-OP-032).

1.2. Table B1 lists compounds, which are routinely determined by this method, and gives the Reporting Limits (RL) for each matrix. RLs given are based on the low level standard and the sample preparation concentration factors. Matrix interferences may result in higher RLs than those listed.

1.3. At client request, this method may also be used for the analysis of PCBs (Aroclors) in combination with pesticides, although these are normally analyzed following Method 8082, as described in Appendix C of this SOP. Extracts that have been acid cleaned may not be analyzed for pesticides, since several of the pesticides will be degraded.

1.4. The associated LIMS method code is QJ (Method 8081A).

2. SUMMARY OF METHOD

2.1. This method presents conditions for the analysis of prepared extracts of organochlorine pesticides. The pesticides are injected onto the column and separated and detected by electron capture detection. Quantitation is by external standard methods.

3. DEFINITIONS

3.1. Refer to the TestAmerica North Canton Quality Assurance Manual (QAM), current version, for definitions of terms used in this document.

4. INTERFERENCES

4.1. Refer to the Method 8000B section of this SOP for information regarding chromatographic interferences.

4.2. Interferences in the GC analysis arise from many compounds amenable to gas chromatography that give a measurable response on the electron capture detector. Phthalate esters, which are common plasticizers, can pose a major problem in the determinations. Avoiding contact with any plastic materials minimizes interferences from phthalates.

4.3. Sulfur will interfere and can be removed using procedures described in SOP NC-OP-025, Cleanup SOP.

4.4. Interferences co-extracted from samples will vary considerably from source to source. The presence of interferences may raise quantitation limits for individual samples. Using hexane / acetone as the extraction solvent (rather than hexane / methylene chloride) will reduce the amount of interferences extracted.

5. SAFETY

5.1. Refer to Section 5 of the Method 8000B SOP for general safety requirements.

5.2. The following parameters covered by this method have been tentatively classified as known or suspected, human or mammalian carcinogens: 4,4'-DDT, 4,4'-DDD, and the BHCs. Primary standards of these toxic compounds must be prepared in a hood.

5.3. All ^{63}Ni sources must be leak-tested every six months, or in accordance with the manufacturer's general radioactive material license.

Company Confidential & Proprietary

5.4. All ^{63}Ni sources must be inventoried every six months. If a detector is missing, the Director, EH&S must be immediately notified, and a letter sent to the NRC or local state agency.

6. EQUIPMENT AND SUPPLIES

6.1. Refer to Section 6 of the Method 8000B section of this SOP. A ^{63}Ni electron capture detector is required.

6.2. Refer to Table B2 for analytical columns.

6.3. Microsyringes, various sizes, for standards preparation, sample injection, and extract dilution.

6.4 Autosampler vials, inserts, and caps

7. REAGENTS AND STANDARDS

7.1. Refer to the Method 8000B section of this SOP for general requirements for reagents and supplies.

7.2. Refer to Table B3 for details of calibration standards. See the Standards Logbook for details on sample preparation.

7.3. Surrogate Standards

7.3.1. Tetrachloro-m-xylene and decachlorobiphenyl are the surrogate standards. Refer to Tables B5 and B6 for details of surrogate standards.

7.4. Column Degradation Evaluation Mix

7.4.1. A mid-level standard containing 4,4'-DDT and Endrin and not containing any of their breakdown products must be prepared for evaluation of degradation of these compounds by the GC column and injection port. This mix must be replaced after one year, or whenever corrective action to columns fails to eliminate the breakdown of the compounds, whichever is shorter. This solution also contains the surrogates. Refer to Table B4 for details of the column degradation evaluation mix.

8. SAMPLE COLLECTION, PRESERVATION AND STORAGE

8.1. The holding time for pesticide extracts is 40 days from extraction to analysis. Samples must be refrigerated at $\leq 6^{o}$C.

9. QUALITY CONTROL

9.1. Refer to the Method 8000B section of this SOP (Section 9) for general quality control procedures, including batch definition, requirements for method blanks, LCS, matrix spikes, surrogates, and control limits.

10. CALIBRATION AND STANDARDIZATION

10.1. Refer to Section 10 of the Method 8000B section of this SOP for general calibration requirements.

10.2. Refer to Table B2 for recommended details of GC operating conditions. The conditions listed must result in resolution of all analytes listed in Table B1 on both columns.

10.3. Column Degradation Evaluation

Company Confidential & Proprietary

10.3.1. Before any calibration runs, either initial or 12 hour, the column evaluation mix must be injected before each initial or daily calibration. The degradation of DDT and endrin must be calculated (see Equations 9 and 10) and each shown to be less than 15% before calibration can proceed. This is only necessary if the target compound list includes DDT, Endrin, or any of their degradation products.

10.3.2. If the breakdown of DDT and/or endrin exceeds the limits given above, corrective action must be taken. This action may include:

10.4. Replacement of the injection port liner or the glass wool.

10.5. Cutting off a portion of the injection end of a capillary column.

10.6. Replacing the GC column.

10.7. Initial Calibration

10.7.1. Refer to Section 10 of the Method 8000B section of this SOP for details of calibration procedures.

10.7.2. Refer to Table B7 for the initial calibration analytical sequence.

10.7.3. The response for each single-peak analyte must be calculated by the procedures described in the general method for GC analysis.

10.7.4. The surrogate calibration curve is calculated from the AB mix. If there are resolution problems, then the A and B mixes may be analyzed separately.

10.7.5. For multi-component pesticides:

10.7.5.1. A five-point calibration is used for multi-component pesticides (typically toxaphene and technical chlordane). Two options are possible; the same quantitation option must be used for standards and samples. Refer to Section 12.3 for guidance on which option to use.

10.7.5.2. A full five-point calibration for any of the multi-component analytes is analyzed.

10.8. 12-hour Calibration Verification

10.8.1. The 12-hour calibration verification sequence must be analyzed within 12 hours of the start of the initial calibration and at least once every 12 hours thereafter if samples are being analyzed. If more than 12 hours have elapsed since the injection of the last sample in the analytical sequence, a new analytical sequence must be started with a 12-hour calibration. A mid-level calibration standard is used for the 12-hour calibration. Refer to the Method 8000B section of this SOP for acceptance criteria.

10.8.2. At a minimum, the 12-hour calibration includes analysis of the breakdown mix followed by mid-level standards of the AB mix. At a minimum, multi-component analytes are analyzed at the beginning of a sequence.

10.8.3. The retention time windows for any analytes included in the 12-hour calibration are updated.

10.9. Initial Calibration Verification (ICV)

10.9.1. An initial calibration verification (ICV) standard, from a second source, is analyzed immediately following the initial calibration. Acceptance criteria is ± 15% for TCL analytes and ± 30% for all other analytes. If this is not met, a new initial calibration curve is analyzed.

10.10. Continuing Calibration

10.10.1. A mid-level AB calibration mix is analyzed as the continuing calibration standard. At a minimum, this is analyzed after every 20 samples, including matrix spikes, LCS, and method blanks. If 12 hours elapse, analyze the 12-hour standard sequence instead. The continuing calibration standard need not include multi-component analytes. If instrument drift is expected due to sample matrix or other factors, it may be advisable to analyze the continuing calibration standard more frequently.

11. PROCEDURE

11.1. Refer to the Method 8000B section of this SOP for general procedural requirements.

11.2. Extraction

11.2.1. The extraction procedure is described in SOP NC-OP-032.

11.3. Cleanup

11.3.1. Cleanup procedures are described in SOP No. NC-OP-025.

11.4. Suggested gas chromatographic conditions are given in Table B2.

11.5. Allow extracts to warm to ambient temperature before injection.

11.6. The suggested analytical sequence is given in Table B7.

12. DATA ANALYSIS AND CALCULATIONS

12.1. Refer to the Method 8000B section of this SOP for identification and quantitation of single component analytes.

12.2. Identification of Multi-Component Analytes

12.2.1. Retention time windows are also used for identification of multi-component analytes, but the "fingerprint" produced by major peaks of those compounds in the standard is used in tandem with the retention times to identify the compounds. The ratios of the areas of the major peaks are also taken into consideration. Identification of these compounds may be made even if the retention times of the peaks in the sample fall outside of the retention time windows of the standard, if in the analyst's judgment the fingerprint (retention time and peak ratios) resembles the standard chromatogram.

12.3. Quantitation of Multi-Component Analytes

12.3.1. Use 3-10 major peaks (or total area for quantitation) as described in Section 10.4.4, initial calibration of multi-component analytes.

12.3.2. If there are no interfering peaks within the envelope of the multi-component analyte, the total area of the standards and samples may be used for quantitation. Any surrogate or extraneous peaks within the envelope must be subtracted from the total area.

12.3.2.1. Multiple peak option

12.3.3. This option is particularly valuable if toxaphene is identified but interferences make quantitation based on total area difficult. Select 3-10 major peaks in the analyte pattern. Calculate the response using the total area or total height of these peaks. Alternatively, find the response of each of the 3-10 peaks per multi-peak pesticide, and use these responses independently, averaging the resultant concentrations found in samples for a final concentration result. When using this option, it is appropriate to remove peaks that appear to be coeluting with contaminant peaks from the quantitation. (i.e., peaks which are significantly larger than would be expected from the rest of the pattern.)

12.3.4. Chlordane may be quantitated either using the multiple peak option (Section 12.3.1, Appendix B), total area option (Section 12.3. 2., Appendix B), or by quantitation of the major components, α-chlordane, γ-chlordane and heptachlor.

12.4. Total area option

12.4.1. The total area of the standards and samples may be used for quantitation of multi-component analytes. Any surrogate or extraneous peaks within the envelope must be subtracted from the total area. This option must not be used if there are significant interference peaks within the multi-component pattern in the samples. The retention time window for total area measurement must contain at least 90% of the area of the analyte.

12.5. Second column confirmation multi-component analytes will only be performed when requested by the client, because the appearance of the multiple peaks in the sample usually serves as a confirmation of analyte presence. For Ohio VAP projects, both columns must meet criteria.

12.6. Surrogate recovery results are calculated and reported for decachlorobiphenyl (DCB) and tetrachloro-m-xylene (TCMX). Corrective action is only necessary if DCB and TCMX are both outside of acceptance limits.

12.7. Calculation of Column Degradation/% Breakdown (%B)

Equation 9

12.7.1. $$DDT\ \%B = \frac{A_{DDD} + A_{DDE}}{A_{DDD} + A_{DDE} + A_{DDT}} \times 100$$

Where:

A_{DDD}, A_{DDE}, and A_{DDT} = the response of the peaks for 4,4'-DDD, 4,4'-DDE, and 4,4'-DDT in the column degradation evaluation mix.

Equation 10

$$Endrin\ \%B = \frac{A_{EK} + A_{EA}}{A_{EK} + A_{EA} + A_{E}} \times 100$$

Where:

A_{EK}, A_{EA}, and A_{E} = the response of endrin ketone, endrin aldehyde, and endrin in the column degradation evaluation mix.

13. METHOD PERFORMANCE

13.1. Performance limits for the four replicate initial demonstration of capability required under Section 13.1 of the main body of this SOP.

14. POLLUTION PREVENTION

14.1. Refer to Section 14 of the Method 8000B section of this SOP.

15. WASTE MANAGEMENT

15.1. Refer to Section 15 of the 8000B section of this SOP.

16. REFERENCES

16.1. SW846, Update III, December 1996, Method 8081A

17. MISCELLANEOUS

17.1. Modifications from Reference Method - None

17.2. TABLES

Table B1
Standard Analyte List and Reporting Limits for Method 8081A

Compound	Reporting Limit, µg/L or µg/kg		
	water	soil	waste
Aldrin	0.05	1.7	50
α-BHC	0.05	1.7	50
β-BHC	0.05	1.7	50
δ-BHC	0.05	1.7	50
γ-BHC (Lindane)	0.05	1.7	50
α-Chlordane	0.05	1.7	50
γ-Chlordane	0.05	1.7	50
Chlordane (technical)	0.5	17	500
4,4'-DDD	0.05	1.7	50
4,4'-DDE	0.05	1.7	50
4,4'-DDT	0.05	1.7	50
Dieldrin	0.05	1.7	50
Endosulfan I	0.05	1.7	50
Endosulfan II	0.05	1.7	50
Endosulfan Sulfate	0.05	1.7	50
Endrin	0.05	1.7	50
Endrin Aldehyde	0.05	1.7	50
Heptachlor	0.05	1.7	50
Heptachlor Epoxide	0.05	1.7	50
Methoxychlor	0.1	3.3	100
Toxaphene	2.0	67	2000
APPENDIX IX ADD-ONs			
Diallate	1.0	33	1000
Isodrin	0.1	3.3	100
Chlorobenzilate	0.1	3.3	100
Kepone[1]	1.0	33	1000

[1] Kepone is sometimes requested for analysis by method 8081A. However, kepone may produce peaks with broad tails that elute later than the standard by up to a minute (presumably due to hemi-acetal formation). As a result kepone analysis by 8081A is unreliable and not recommended. Analysis by method 8270C is a possible alternative.
Note: alpha chlordane, gamma chlordane, and endrin ketone are not required for some projects. The following concentration factors are assumed in calculating the Reporting Limits:

	Extraction Vol.	Final Vol.
Ground water	1000 mL	10 mL
Low-level Soil	30g	10 mL
High-level soil / waste	1g	10 mL

Table B2 Recommended Conditions for Method 8081A	
Parameter	**Recommended Conditions**
Injection port temp	220°C
Detector temp	325°C
Temperature program	120°C for 1 min, 8.5°C/min to 285°C, , 6 min hold
Column 1	Rtx-CLPesticides 30m x 0.32mm id, 0.5µm
Column 2	Rtx-35 30m x 0.32 mm id, 0.5µm
Column 3	DB-608, 30m X 0.32 mm, 0.25µm
Injection	2µL
Carrier gas	Helium or Hydrogen
Make up gas	Nitrogen
Y splitter	Restek or J&W or Supelco glass tee

Table B3 Calibration Levels ng/mL for Method 8081A						
	Level 1	**Level 2**	**Level 3**	**Level 4**	**Level 5**	**Level 6**[2]
Individual Mix AB[1]						
Aldrin	5	10	25	50	100	200
g-BHC (Lindane)	5	10	25	50	100	200
Heptachlor	5	10	25	50	100	200
Methoxychlor	10	20	50	100	200	400
Dieldrin	5	10	25	50	100	200
Endosulfan I	5	10	25	50	100	200
Endosulfan II	5	10	25	50	100	200
4,4'-DDT	5	10	25	50	100	200
Endrin Aldehyde	5	10	25	50	100	200
Endrin Ketone	5	10	25	50	100	200
β-BHC	5	10	25	50	100	200
δ-BHC	5	10	25	50	100	200
α-BHC	5	10	25	50	100	200
4,4'-DDD	5	10	25	50	100	200
4,4'-DDE	5	10	25	50	100	200
Endosulfan Sulfate	5	10	25	50	100	200
Endrin	5	10	25	50	100	200
α-Chlordane [3]	5	10	25	50	100	200
γ-Chlordane [3]	5	10	25	50	100	200
Multi-component Standards						
Chlordane (Technical)	20	50	100	200	500	
Toxaphene	200	500	1000[5]	2000	5000	
Surrogates are included with all the calibration mixes at the following levels:						
Tetrachloro-m-xylene	5	10	25	50	100	200
Decachlorobiphenyl	5	10	25	50	100	200

[1] Standards may be split into an A and B mix if resolution of all compounds on both columns is not obtained.
[2] Level 6 is optional and should only be used if linearity can be maintained on the instrument to this level.
[3] Compounds may be used in lieu of running a daily technical Chlordane standard for samples that are non-detect for technical Chlordane.

Company Confidential & Proprietary

Table B4	
Column Degradation Evaluation Mix ng/mL for Method 8081A	
Component	Concentration
4,4'-DDT	25
Endrin	25
Tetrachloro-m-xylene (Surrogate)	20
Decachlorobiphenyl (Surrogate)	20

Table B5			
LCS/Matrix Spike and Surrogate Spike levels mg/L or mg/kg for Method 8081A			
	Aqueous	Soil	Waste
gamma BHC (Lindane)	0.20	33.3	200
Aldrin	0.20	33.3	200
Heptachlor	0.20	33.3	200
Dieldrin	0.50	33.3	500
Endrin	0.50	33.3	500
4,4'DDT	0.50	33.3	500
Tetrachloro-m-xylene (Surrogate)	0.20	33.3	200
Decachlorobiphenyl (Surrogate)	0.20	33.3	200

Table B6		
LCS/Matrix Spike and Surrogate Spike levels for TCLP mg/L or mg/kg for Method 8081A		
	Aqueous	Waste
Heptachlor	5	500
Heptachlor epoxide	5	500
Lindane	5	500
Endrin	5	500
Methoxychlor	10	1000

Company Confidential & Proprietary

Table B7
Suggested Analytical Sequence for Method 8081A

Initial Calibration

ICV	
Solvent blank (optional)	
Primer if needed	
Breakdown Mix	
Individual mix AB	All levels
Technical Chlordane	Level 3[1]
Toxaphene	Level 3[1]
Up to 20 samples unless 12 hours comes first)	
Solvent blank (optional)	
Individual mix AB	Mid level (Continuing calibration)
Samples	
After 12 hours:	
Breakdown mix	
Individual mix AB	
Any other single component analytes	

Any multi-component analytes

[1] A five-point curve for any of the multi-component analytes may be included. If Aroclors are included, a five-point calibration for Aroclor 1016/1260 must be included with the initial calibration and a single point for the other Aroclors. The mid point 1016/1260 mix is included with the daily calibration (every 12 hours).

Note: A solvent blank or primer may be analyzed at any time during the sequence when highly contaminated samples are expected. A solvent blank or primer may not be analyzed as routine immediately prior to standards.

Note: The initial primer is used if the instrument has been idle for a period of time.

12 -Hour Calibration

At least every 12 hours, counting from the start of the initial calibration or from the start of the last daily calibration, the retention time windows must be updated using the Individual mix AB; and the breakdown mix must be run before the continuing calibration.

Company Confidential & Proprietary

1. SCOPE AND APPLICATION

1.1. This SOP Appendix describes procedures to be used when SW-846 Method 8082 is applied to the analysis of polychlorinated biphenyls (PCB) by GC/ECD. This Appendix is applicable to extracts derived from any matrix which are prepared according to the appropriate sample extraction SOP (NC-OP-032). PCBs are determined and quantitated as Aroclor mixes.

1.2. Tables C1 and C5 lists compounds, which are routinely determined by this method, and gives the Reporting Limits (RL) for each matrix. RLs given are based on the low level standard and the sample preparation concentration factors. Matrix interferences may result in higher RLs than those listed.

Note: SW-846 method 8082 provides incomplete guidance for determination of individual PCB congeners. This SOP does not include directions for congener specific analysis.

1.3. The associated LIMS method code is QH (8082).

2. SUMMARY OF METHOD

2.1. This method presents conditions for the analysis of prepared extracts of PCBs. The PCBs are injected onto the column and separated and detected by electron capture detection. Quantitation is by the external standard method.

3. DEFINITIONS

3.1. Refer to the TestAmerica North Canton Quality Assurance Manual (QAM), current version, for definitions of terms used in this document.

4. INTERFERENCES

4.1. Refer to the Method 8000B section of this SOP for information regarding chromatographic interferences.

4.2. Interferences in the GC analysis arise from many compounds amenable to gas chromatography that give a measurable response on the electron capture detector. Phthalate esters, which are common plasticizers, can pose a major problem in the determinations. Avoiding contact with any plastic materials minimizes interferences from phthalates.

4.3. Sulfur will interfere and can be removed using procedures described in SOP NC-OP-025.

4.4. Interferences co-extracted from samples will vary considerably from source to source. The presence of interferences may raise quantitation limits for individual samples. Specific cleanups may be performed on the sample extracts. These cleanup procedures are included in SOP NC-OP-025.

5. SAFETY

5.1. Refer to Section 5 of the Method 8000B SOP for general safety requirements.

5.2. Aroclors have been classified as a potential carcinogen under OSHA. Concentrated solutions of Aroclors must be handled with extreme care to avoid excess exposure. Contaminated gloves and clothing must be removed immediately. Contaminated skin surfaces must be washed thoroughly.

5.3. All ^{63}Ni sources must be leak tested every six months, or in accordance with the manufacturer's general radioactive material license.

Company Confidential & Proprietary

5.4. All ^{63}Ni sources must be inventoried every six months. If a detector is missing, the EH&S Director must be immediately notified and a letter sent to the NRC or local state agency.

6. EQUIPMENT AND SUPPLIES

6.1. Refer to Section 6 of the Method 8000B section of this SOP. A ^{63}Ni electron capture detector is required.

6.2. Refer to Table C2 for analytical columns.

6.3. Microsyringes, various sizes, for standards preparation, sample injection, and extract dilution.

7. REAGENTS AND STANDARDS

7.1. Refer to the Method 8000B section of this SOP for general requirements for reagents and supplies.

7.2. Refer to Table C3 for details of calibration standards. See the Standards Logbook for details on sample preparation.

7.3. Surrogate Standards

7.3.1. Tetrachloro-m-xylene and decachlorobiphenyl are the surrogate standards. Refer to Table C4 for details of surrogate standards.

8. SAMPLE COLLECTION, PRESERVATION AND STORAGE

8.1. The holding time for PCB extracts is 40 days from extraction to analysis. Samples must be refrigerated at $\leq 6^{o}$C.

9. QUALITY CONTROL

9.1. Refer to the Method 8000B section of this SOP (Section 9) for general quality control procedures, including batch definition, requirements for method blanks, LCS, matrix spikes, surrogates, and control limits.

10. CALIBRATION AND STANDARDIZATION

10.1. Refer to Section 10 of the Method 8000B section of this SOP for general calibration requirements.

10.2. Initial Calibration

10.2.1. Refer to Table C6 for the initial calibration analytical sequence.

10.2.2. The response for each Aroclor must be calculated by the procedures described in the general method for GC analysis with the following modifications.

10.2.3. A minimum five-point calibration of all Aroclors is generated. The average response factor is used to quantitate Aroclors. The low-level standard must be at or below the reporting limit. The other standards define the working range of the detector.

10.2.4. The high and low standards for the initial five-point calibration of 1016 / 1260 define the acceptable quantitation range for the other Aroclors. If any Aroclor is determined above this concentration, the extract must be diluted and re-analyzed.

Note: For Ohio VAP, Aroclor 1268 may be analyzed. In order to meet project-specific reporting limits, a lower concentration standard may be added to the calibration curve.

10.2.5. If the analyst knows that a specific Aroclor is of interest for a particular project, that Aroclor

Company Confidential & Proprietary

may be used for the five point calibration rather than the 1016 / 1260 mix.

10.2.6. The surrogate calibration curve is calculated from the Aroclor 1016/1260 mix. Surrogates in the other calibration standards are used only as retention time markers.

10.2.7. The following is used for the quantitation of all Aroclors. The same quantitation option must be used for standards and samples.

10.2.7.1. Multiple peak option.

10.2.7.2. Select 3-10 major peaks in the analyte pattern. Calculate the response using the total area or total height of these peaks.

10.3. 12-Hour Calibration

10.3.1. The 12-hour calibration verification must be analyzed within 12 hours of the start of the initial calibration and at least once every 12 hours thereafter if samples are being analyzed. If there is a break in the analytical sequence of greater than 12 hours, then a new continuing calibration run must be analyzed before proceeding with the sequence. If more than 12 hours have elapsed since the injection of the last sample in the analytical sequence, a new analytical sequence must be started with a 12-hour calibration.

10.3.2. At a minimum, the 12-hour calibration includes analysis of the Aroclor 1260 / 1016 mix.

10.3.3. Other Aroclors are included in the daily calibration check.

10.3.4. The retention time windows for any analytes included in the daily calibration and CCVs are updated.

10.3.5. For this method, samples must be bracketed with successful calibration verification runs.

10.4. Initial Calibration Verification (ICV)

10.4.1. An initial calibration verification (ICV) standard, from a second source, is analyzed immediately following the initial calibration. Acceptance criteria is ± 15%. If this is not met, a new initial calibration curve is analyzed.

10.5. Calibration Verification Standards

10.5.1. The Aroclor 1260/1016 calibration mix is analyzed as the calibration verification standard. This is analyzed after every 20 samples, including matrix spikes, LCS, and method blanks. (Depending on the type of samples, it may be advisable to analyze verifications more frequently in order to minimize reruns.)

10.5.2. A mid-level standard is used for the calibration verification.

11. PROCEDURE

11.1. Refer to the Method 8000B section of this SOP for general procedural requirements.

11.2. Extraction

11.2.1. The extraction procedure is described in SOP NC-OP-032.

11.3. Cleanup

11.3.1. Cleanup procedures are described in SOP NC-OP-025.

11.4. Suggested gas chromatographic conditions are given in Table C2.

11.5. Allow extracts to warm to ambient temperature before injection.

11.6. The suggested analytical sequence is given in Table C6.

12. DATA ANALYSIS AND CALCULATIONS

12.1. Identification of Aroclors

12.1.1. Retention time windows are used for identification of Aroclors, but the "fingerprint" produced by major peaks of those analytes in the standard is used in tandem with the retention times for identification. The ratios of the areas of the major peaks are also taken into consideration. Identification may be made even if the retention times of the peaks in the sample fall outside of the retention time windows of the standard, if in the analyst's judgment the fingerprint (retention time and peak ratios) resembles the standard chromatogram.

12.1.2. A clearly identifiable Aroclor pattern serves as confirmation of single column GC analysis. Dual column confirmation may be used for specific program requirements or by client request.

12.2. Quantitation of Aroclors

12.2.1. Use 3-10 major peaks or total area for quantitation

12.2.2. If the analyst believes that a combination of Aroclor 1254 and 1260 or a combination of 1242, 1248 and 1232 is present, then only the predominant Aroclor is quantitated and reported; but the suspicion of multiple Aroclors is discussed in the narrative. If well-separated Aroclor patterns are present, then multiple Aroclors may be quantitated and reported.

12.3. Second column confirmation of Aroclors will only be performed when requested by the client. The appearance of the multiple peaks in the sample usually serves as a confirmation of Aroclor presence. For Ohio VAP projects, both columns must meet criteria.

12.4. Surrogate recovery results are calculated and reported for decachlorobiphenyl (DCB) and tetrachloro-m-xylene (TCMX). Corrective action is only necessary if DCB and TCMX are both outside of acceptance limits, or if one is <10%.

Note: For Ohio VAP samples and DoD projects, all surrogates must meet acceptance limits.

13. METHOD PERFORMANCE

13.1. Performance limits for the four replicate initial demonstration of capability are required as referenced under Section 13.1 of the main body of this SOP.

13.2. Method detection limits (MDL) are determined for all Aroclors.

14. POLLUTION PREVENTION

14.1. Refer to Section 14 of the 8000B section of this SOP.

15. WASTE MANAGEMENT

15.1. Refer to Section 15 of the Method 8000 section of this SOP

16. REFERENCES

16.1. SW846, Update III, December 1996, Method 8082

17. MISCELLANEOUS

17.1. Modifications from Reference Method

17.1.1. Method 8082 includes limited direction for congener specific quantitation. This is outside the scope of this SOP.

17.2. TABLES

Table C1
Standard Analyte list and Reporting Limits for Method 8082

Compound	Reporting Limit, µg/L or µg/kg		
	Water	Soil	Waste
Aroclor-1016	1.0	33	1000
Aroclor-1221	1.0	33	1000
Aroclor-1232	1.0	33	1000
Aroclor 1242	1.0	33	1000
Aroclor-1248	1.0	33	1000
Aroclor-1254	1.0	33	1000
Aroclor-1260	1.0	33	1000

The following concentration factors are assumed in calculating the Reporting Limits:

	Extraction Vol.	Final Vol.
Ground water	1000 mL	10 mL
Low-level Soil	30g	10 mL
High-level soil / waste	1g	10 mL

Table C2
Instrumental Conditions for Method 8082

Parameter	Recommended Conditions
Injection port temp	220°C
Detector temp	325°C
Temperature program	70°C for 0.5min, 30°C/min to 190°C, 2.5°C/min to 225, 18°C/min to 280°C, 3 min hold
Column 1	DB-5 or Rtx-5 30m x 0.32mm id, 0.5µm
Column 2	DB-1701 or Rtx 1701 30m x 0.32 mm id, 0.25µm
Column 3	DB-608, 30m X 0.32 mm, 0.25µm
Injection	1-2µL
Carrier gas	Helium or Hydrogen
Make up gas	Nitrogen
Y splitter	Restek or J&W or Supelco glass tee

Company Confidential & Proprietary

Table C3 Calibration Levels ng/mL for Method 8082						
	Level 1	Level 2	Level 3	Level 4	Level 5	Level 6[1]
Aroclor 1016/1260	0.05	0.1	0.2	0.5	1.0	2.0
Aroclor 1242[2]	0.05	0.1	0.2	0.5	1.0	2.0
Aroclor 1221 +1254[2]	0.05	0.1	0.2	0.5	1.0	2.0
Aroclor 1232[2]	0.05	0.1	0.2	0.5	1.0	2.0
Aroclor 1248[2]	0.05	0.1	0.2	0.5	1.0	2.0
Aroclor 1262	0.05	0.1	0.2	0.5	1.0	2.0
Aroclor 1268	0.05	0.1	0.2	0.5	1.0	2.0
Surrogates are included with all the calibration mixes at the following levels:						
Tetrachloro-m-xylene	5	10	25	50	100	200
Decachlorobiphenyl	5	10	25	50	100	200

[1] Level 6 is optional and should only be used if linearity can be maintained on the instrument to this level.
[2] Aroclors may be quantitated within the range 100 to 2000 ng/mL (4000ng/mL if the level 6 1016/1260 standard is included). If the Aroclor is more concentrated, it must be re-analyzed at a dilution.

Table C4 LCS/Matrix Spike and Surrogate Spike levels for Aroclor analysis mg/L or mg/kg for Method 8082			
	Aqueous	Soil	Waste
Aroclor 1016/1260	10	333	10,000
Tetrachloro-m-xylene (Surrogate)	0.20	6.67	200
Decachlorobiphenyl (Surrogate)	0.20	6.67	200

Table C5 Michigan Analyte List and Reporting Limits[1] for Method 8082			
	Reporting Limit		
Compound	water (µg/L)	soil (µg/Kg)	
Aroclor-1016	0.2	330	
Aroclor-1221	0.2	330	
Aroclor-1232	0.4	330	
Aroclor 1242	0.2	330	
Aroclor-1248	0.2	330	
Aroclor-1254	0.2	330	
Aroclor-1260	0.2	330	

[1] Reporting Limits are only for samples performed under the Michigan program

Company Confidential & Proprietary

Table C6
Suggested Analytical Sequence for Method 8082

Initial Calibration

Injection #		
1	Solvent blank (optional)	
2	Aroclor 1016/1260	Level 1
3	Aroclor 1016/1260	Level 2
4	Aroclor 1016/1260	Level 3
5	Aroclor 1016/1260	Level 4
6	Aroclor 1016/1260	Level 5
7	Aroclor 1232	An Initial Calibration includes Levels 1-5. A midpoint is used as CCV.
8	Aroclor 1242	An Initial Calibration includes Levels 1-5. A midpoint is used as CCV.
9	Aroclor 1248	An Initial Calibration includes Levels 1-5. A midpoint is used as CCV.
10	Aroclor 1221/1254	An Initial Calibration includes Levels 1-5. A midpoint is used as CCV.
11	Aroclor 1268 or 1262	An Initial Calibration includes Levels 1-5. A midpoint is used as CCV.
12	ICV	
13-32	Sample 1-20 (or as many samples as can be analyzed in 12 hours	
33	Aroclor 1016/1260	Level 3

etc

Note: A solvent blank or primer may be analyzed at any time during the sequence when highly contaminated samples are expected. A solvent blank or primer may not be analyzed as routine immediately prior to standards.

12-hour Calibration

At least every 12 hours, counting from the start of the initial calibration, or from the start of the last daily calibration, the retention time windows must be updated using the Aroclor 1260 / 1016 mix. Mid level standards of any other Aroclors expected to be present in the samples are also injected.

Company Confidential & Proprietary

1. SCOPE AND APPLICATION

1.1. This SOP Appendix describes procedures to be used when SW-846 Method 8151A or EPA Method 615 is applied to the analysis of chlorinated phenoxy acid herbicides in extracts prepared by SOP NC-OP-

1.2. The herbicides listed in Table D1 are routinely analyzed. Other chlorinated acids may be analyzed by this method if the quality control criteria in Section 9 and the initial demonstration of method performance in Section 13 are met. Routine reporting limits are listed in Table D1.

1.3. The associated LIMS method codes are QS (8151A) and HR (615).

2. SUMMARY OF METHOD

2.1. This method presents conditions for the analysis of prepared extracts of phenoxy acid herbicides by gas chromatography. The herbicides, as their methyl esters, are injected onto the column, separated, and detected by electron capture detectors. Quantitation is by the external standard method.

3. DEFINITIONS

3.1. Refer to the TestAmerica North Canton Quality Assurance Manual (QAM), current version, for definitions of terms used in this document.

4. INTERFERENCES

4.1. Refer to the Method 8000B section of this SOP for general information regarding chromatographic interferences.

4.2. Chlorinated acids and phenols cause the most direct interference with this method.

4.3. Sulfur may interfere and may be removed by the procedure described in SOP NC-OP-025.

5. SAFETY

5.1. Refer to Section 5 of the Method 8000B SOP for general safety requirements.

5.2. All ^{63}Ni sources must be leak tested every six months, or in accordance with the manufacturer's general radioactive material license.

5.3. All ^{63}Ni sources must be inventoried every six months. If a detector is missing, the EH&S Director must be immediately notified and a letter sent to the NRC or local state agency.

6. EQUIPMENT AND SUPPLIES

6.1. Refer to Section 6 of the Method 8000B section of this SOP. A Ni_{63} electron capture detector is required.

6.2. Refer to Table D2 for analytical columns.

6.3. Microsyringes, various sizes, for standards preparation, sample injection, and extract dilution.

7. REAGENTS AND STANDARDS

7.1. Refer to Section 7 of the Method 8000B section of this SOP for general information on reagents and standards.

Company Confidential & Proprietary

7.2. Refer to Table D4 for details of calibration standards. See the Standards Logbook for details on sample preparation.

7.3. Surrogate Standards

7.3.1. DCAA is the surrogate standard. Refer to Table D4 for details of surrogate standards.

8. SAMPLE PREPARATION, PRESERVATION, AND STORAGE

8.1. The holding time for herbicide extracts is 40 days from extraction to analysis. Samples must be refrigerated at $\leq 6^{o}$C.

9. QUALITY CONTROL

9.1. Refer to Section 9 of the Method 8000B section of this SOP for quality control requirements, including the initial demonstration of capability, definition of a batch, surrogate limits, method blanks, laboratory control samples (LCS), and matrix spikes (MS).

9.2. Refer to Table D3 for the components and levels of the LCS and MS mixes.

10. CALIBRATION AND STANDARDIZATION

10.1. Refer to Section 10 of the Method 8000B section of this SOP for general calibration requirements.

10.2. Calibration standards are prepared from purchased standards in the methyl ester form.

10.3. The low-level standard must be at or below the laboratory reporting limit. Other standards are chosen to bracket the expected range of concentrations found in samples without saturating the detector or leading to excessive carryover.

10.4. Initial Calibration Verification (ICV)

10.4.1. An initial calibration verification (ICV) standard, from a second source, is analyzed immediately following the initial calibration. Acceptance criteria is ± 15% for TCL analytes and ± 30% for all other analytes. If this is not met, a new initial calibration curve is analyzed.

11. PROCEDURE

11.1. Refer to the Method 8000B section of this SOP for procedural requirements.

11.2. Extraction

11.2.1. The extraction procedure is described in SOP NC-OP-032.

11.3. Cleanup

11.3.1. The alkaline hydrolysis and subsequent extraction of the basic solution described in the extraction procedure provides an effective cleanup.

11.4. Analytical Sequence

11.4.1. The analytical sequence starts with an initial calibration of at least five points, or a daily calibration that meets % difference criteria from an existing initial calibration.

11.4.2. The daily calibration must be analyzed at least once every 24 hours when samples are being analyzed. If there is a break in the analytical sequence of greater than 12 hours, then a new

continuing calibration run must be analyzed before proceeding with the sequence.

11.4.3. The daily calibration consists of mid level standards of all analytes of interest. Retention time windows must be updated with the daily calibration.

11.4.4. After every 12 hours a continuing calibration is analyzed. The continuing calibration consists of mid level standards of all analytes of interest. Retention time windows are updated with continuing calibrations.

11.5. Gas Chromatography

11.5.1. Chromatographic conditions are listed in Table D2.

12. DATA ANALYSIS AND CALCULATIONS

12.1. Refer to the Method 8000B section of this SOP for identification and quantitation of single component analytes.

12.2. The herbicides are analyzed as their methyl esters, but reported as the free acid. For this reason, it is necessary to correct the results for the molecular weight of the ester versus the free acid. This is achieved through the concentrations of the calibration standards. For example the 20µg/L calibration standard for 2,4-D contains 21.3 µg/L of the methyl ester. No further correction is necessary.

12.3. A routine 10X dilution occurs on final extracts for all samples. Due to a QuantIMS limitation, the dilution factor field in QuantIMS cannot be used when a dilution is routine, because the dilution factor is automatically applied to all reference values creating reporting problems. For the herbicide analysis, the extract volume will be 10mL and an aliquot at 10X dilution will be analyzed. The final extract volume recorded on the laboratory bench sheet will be recorded as 100mL to avoid using the dilution factor field in QuantIMS.

13. METHOD PERFORMANCE

13.1. Performance limits for the four replicate initial demonstration of capability are required as referenced under Section 13.1 of the main body of this SOP.

14. POLLUTION PREVENTION

14.1. Refer to Section 14 of the 8000B section of this SOP

15. WASTE MANAGEMENT

15.1. Refer to Section 15 of the 8000B section of this SOP

16. REFERENCES

16.1. Method 8151A, SW-846, Update III, December 1996

17. MISCELLANEOUS

17.1. Modifications from Reference Method

17.1.1. Refer to the Method 8000B section of this SOP for modifications from the reference method.

17.2. Modifications from Previous Revision

17.2.1. The calibration procedure has been changed to require esterification of the calibration standards

17.3. TABLES

Table D1				
Standard Analyte List for Method 8151A				
Compound	CAS Number	Reporting Limit, µg/L or µg/kg		
		Aqueous	Soil	Waste
2,4-D	94-75-7	4	80	4000
2,4-DB	94-82-6	4	80	4000
2,4,5-TP (Silvex)	93-72-1	1	20	1000
2,4,5-T	93-76-5	1	20	1000
Dalapon	75-99-0	2	40	2000
Dicamba	1918-00-9	2	40	2000
Dichloroprop	120-36-5	4	80	4000
Dinoseb	88-85-7	0.6	12	600
MCPA	94-74-6	400	8000	400,000
MCPP	93-65-2	400	8000	400,000

The following concentration factors are assumed in calculating the Reporting Limits:

	Extraction Vol.	Final Vol.	Dilution Factor
Ground water	1000 mL 10 mL	10	
Low-level Soil without GPC	50g	10 mL	10
High-level soil / waste	1g	10 mL	10

Specific reporting limits are highly matrix dependent. The reporting limits listed above are provided for guidance only and may not always be achievable. For special projects, the extracts may be analyzed without any dilution, resulting in reporting limits 20 times lower than those in Table D1.

Table D2	
Instrumental Conditions for Method 8151A	
PARAMETER	Recommended conditions
Injection port temp	220°C
Detector temp	325°C
Temperature program	80,2/30/170,0/1/180,1
Column 1	DB-5MS or RTX 5 30x0.32, 0.5um
Column 2	DB-1701 or Rtx-1701
Injection	1-2µL
Carrier gas	Helium / Hydrogen
Make up gas	Nitrogen

Recommended conditions must result in resolution of all analytes listed in Table D1.

The reporting limits listed in Table D1 will be achieved with these calibration levels and a 20-fold dilution of the sample extract. Lower reporting limits can be achieved with lesser dilutions of the sample extract.

Company Confidential & Proprietary

Table D3 **LCS/Matrix Spike and Surrogate Spike levels mg/L or mg/kg[1] for Method 8151A**			
	Aqueous	Soil	Waste
2,4-D	40	400	20000
Silvex	10	100	5000
2,4,5-T	10	100	5000
2,4-DB	40	400	20000
Dalapon	20	200	10000
DCAA (surrogate)	40	400	20000
Dicamba	20	200	10000
MCPP	4000	40000	200000
MCPA	4000	40000	200000
Dichloroprop	40	400	2000
Pentachlorophenol	5	50	2500
Dinoseb	6	60	300

[1] LCS, MS and SS spikes are as the free acid.

Table D4						
Calibration Levels for Method 8151A and 615 (ng amount)						
	Level 1	Level 2	Level 3	Level 4	Level 5	Level 6
2,4 D *	0.02	0.04	**0.08**	0.16	0.32	0.64
2,4 DB	0.02	0.04	**0.08**	0.16	0.32	0.64
2,4,5 T *	0.005	0.01	**0.02**	0.04	0.08	0.16
2,4,5 TP (silvex) *	0.005	0.01	**0.02**	0.04	0.08	0.16
Dalapon	0.01	0.02	**0.04**	0.08	0.16	0.32
DCAA (surr)	0.02	0.04	**0.08**	0.16	0.32	0.64
Dicamba	0.01	0.02	**0.04**	0.08	0.16	0.32
Dichloroprop	0.02	0.04	**0.08**	0.16	0.32	0.64
Dinoseb	0.003	0.006	**0.012**	0.024	0.048	0.096
MCPA	2	4	**8**	16	32	64
MCPP	2	4	**8**	16	32	64
Pentachlorophenol	0.0005	0.005	**0.01**	0.02	0.04	0.08
Picloram	0.02	0.04	**0.08**	0.16	0.32	0.64

* Compounds are controlling compounds in LCS and must pass criteria DCAA - surrogate
Bold levels indicate CCV

Company Confidential & Proprietary

1. SCOPE AND APPLICATION

1.1. This SOP Appendix describes procedures to be used when SW-846 Method 8015B is applied to the determination of the concentration and **tentative** identification of extractable petroleum (diesel range) hydrocarbon mixes in waters, wastewaters, soils, and sludges. This Appendix is applicable to extracts derived from any matrix which are prepared according to the appropriate sample extraction SOP (NC-OP-032).

1.2. The analytes listed in Table E2 are routinely analyzed. Other analytes may be analyzed by this method if the quality control criteria in Section 9 and the initial demonstration of method performance in Section 13 are met. Reporting limits are also listed in Table E2. The laboratory carbon range for Ohio VAP projects is C10-C20 and C20-C32. The laboratory carbon range for BUSTR Projects is C10-C20 and C20-C34.

1.3. The associated LIMS method codes are HS (8015 MOD) and KI (8015B).

2. SUMMARY OF METHOD

2.1. This method presents conditions for the detection and identification of total petroleum hydrocarbons. Quantitation is by the external standard method. An aliquot of the prepared sample is injected into a gas chromatograph (GC) and compounds in the effluent are detected by a flame ionization detector (FID).

3. DEFINITIONS

3.1. Refer to the TestAmerica North Canton Quality Assurance Manual (QAM), current version, for definitions of terms used in this document.

4. INTERFERENCES

4.1. Refer to the Method 8000B section of this SOP for general information regarding chromatographic interferences.

5. SAFETY

5.1. Refer to Section 5 of the Method 8000B SOP for general safety requirements.

6. EQUIPMENT AND SUPPLIES

6.1. Refer to Section 6 of the Method 8000B section of this SOP.

6.2. Microsyringes, various sizes, for standards preparation, sample injection, and extract dilution.

7. REAGENTS AND STANDARDS

7.1. Refer to Section 7 of the Method 8000B section of this SOP.

7.2. The petroleum hydrocarbons are purchased from a chemical supplier when available. When no chemical supplier is available, the fuels are purchased from public sources. See the Standards Logbook for details on sample preparation.

7.3. The OVAP and BUSTR standard is a commercially prepared standard containing alkanes from C10-C34.

7.4. Refer to Table E3 for details of calibration standards.

8. SAMPLE PREPARATION, PRESERVATION, AND STORAGE

8.1. The holding time for semivolatile extracts is 40 days from extraction to analysis. Samples must be refrigerated at <6oC.

9. QUALITY CONTROL

Company Confidential & Proprietary

9.1. Refer to Section 9 of the Method 8000B section of this SOP for quality control requirements, including the initial demonstration of capability, definition of a batch, surrogate limits, method blanks, laboratory control samples (LCS), and matrix spikes (MS).

9.2. MS/MSD recoveries are calculated from a diesel calibration.

9.3. Surrogates

9.3.1. Because of the nature of the TPH analysis, whereas certain petroleum mixtures can override the C9 (Nonane) surrogate.

Note: Ohio VAP rules require reanalysis when surrogate recoveries are outside of control limits. Re-extraction is required if surrogates are outside of control limits.

10. CALIBRATION AND STANDARDIZATION

Refer to Section 10 of the Method 8000B section of this SOP for general calibration requirements.

10.1. Recommended Instrument Conditions

10.1.1. Hydrogen carrier gas - flow rate 5 - 6 mL/min

10.1.2. Detector gas mixture - air hydrogen mixture in a 10:1 ratio, air 80 - 120 mL/min, hydrogen 8 -12 mL/min

10.1.3. Temperature Program - refer to Table E1, Appendix E

10.1.4. Injection volume - 1 µL

10.2. Initial Calibration

10.2.1. Analyze a five point diesel calibration standard referring to the recommended instrument conditions. The calibration concentrations are 100, 200, 500, 1000, and 2000 ng/uL. A 5000ng/uL standard may be analyzed if needed. The retention time window of C10-C32 must be used for the Diesel calibration. The low-level standard must be at or below the reporting limit. The other standards define the working range of the detector.

10.2.2. For Ohio VAP and BUSTR projects, the laboratory analyzes a five-point calibration for the carbon range C10-C20. The concentrations are 60, 120, 240, 600 and 1200 ug/mL. In addition, a five point of the carbon range C20-C34 is also analyzed. The concentration ranges are 80, 160, 320, 800, and 1600 ug/mL. These standards serve as the marker solution and are used to determine the retention time window for each carbon range.

10.3. Initial Calibration Verification (ICV)

10.3.1. An initial calibration verification (ICV) standard, from a second source, is analyzed immediately following the initial calibration. Acceptance criteria is ± 15%. If this is not met, a new initial calibration curve is analyzed.

10.4. Continuing Calibration

10.4.1. Refer to Section 10 of the Method 8000B section of this SOP for general calibration requirements.

10.4.2. A mid-range standard of diesel, C10-20, and C20-34 is used, as appropriate, for the CCV. The acceptance criteria is ±15%. This marker solution must be analyzed at the beginning of each sequence.

11. PROCEDURE

11.1. Refer to the Method 8000B section of this SOP for procedural requirements.

11.2. Extraction

11.2.1. The extraction procedure is described in SOP NC-OP-032.

11.3. Analytical Sequence – Refer to Section 11 in the Method 8000B Section of this SOP.

11.4. Petroleum Hydrocarbon Identification and/or Fingerprinting

11.4.1. To identify the type of petroleum hydrocarbon, compare the chromatographic peak pattern to the patterns of known petroleum hydrocarbons analyzed under identical chromatographic conditions. Samples are quantified against diesel, but fingerprinting may be done when client requested.

11.4.2. Positive matching may not be possible, even using site-specific hydrocarbons. Degradation of the pattern can occur during environmental exposure of the fuel. See Table 2 for possible fingerprints.

11.4.3. Samples are quantified against the initial calibration of diesel or DRO on a single column.

11.4.4. The total height or area of the hydrocarbon is determined in the same manner used for the hydrocarbon standard.

11.4.5. If the amount of sample injected into the GC exceeds the working range of the calibration curve, an appropriate dilution is performed before reanalysis.

12. DATA ANALYSIS AND CALCULATIONS

12.1. Refer to the Method 8000B section of this SOP for identification and quantitation of single component analytes.

12.2. Surrogate recovery results are calculated and reported for Nonane (C-9). The surrogate must be within QC criteria. Corrective action is only necessary if Nonane (C-9) is outside of acceptance limits.

13. METHOD PERFORMANCE

13.1. Performance limits for the four replicate initial demonstration of capability are required as referenced under Section 13.1 of the main body of this SOP.

14. POLLUTION PREVENTION

14.1. Refer to Section 14 of the 8000B section of this SOP.

15. WASTE MANAGEMENT

15.1. Refer to Section 15 of the 8000B section of this SOP.

16. REFERENCES

16.1. SW846, Method 8015B, Nonhalogenated Organics Using GC/FID, Test Methods for Evaluating Solid Waste, Third Edition, USEPA

16.2. Related SOP

16.2.1. NC-OP-032, Extraction of Organic Compounds from Waters and Soils, Based on SW846 3500 Series, 3600 Series, 8150, 8151, and 600 Series Methods

Table E1

Company Confidential & Proprietary

Suggested GC Temperature Program for TPH Analysis

Initial Temperature	40°C
Initial Hold Time	4 minutes
Temperature Program	10°C/minute
Final Temperature	280°C
Final Hold Time	10 minutes

Table E2
Reporting Limits for TPH Analysis

Analyte	**Reporting Limits**		
	Water (mg/L)	**Solids (mg/kg)**	**Waste Dilution (mg/kg)**
TPH (as Diesel) or DRO	100	3.3	200
C10-C20 (OVAP & BUSTR)	60	2.0	
C20-C34 (OVAP & BUSTR)	80	2.3	
Fingerprint Compounds [1]			
Mineral Spirits	Kerosene	Motor Oil	
Hydraulic Oil	Jet Fuel	Stoddard Solvent	
DRO Spiking Solution			
Decane	Dodecane	Tetradecane	
Hexadecane	Octobecane	Eicosane	
Docosane	Tetracosane	Hexacosane	
Octacosane			

[1] This list represents most of the common petroleum hydrocarbons. The list may be expanded to include other petroleum hydrocarbons.

Table E3					
Calibration Levels for Method 8015B (ng/L)					
	Level 1	**Level 2**	Level 3	Level 4	Level 5
TPH (as Diesel)	100	200	500	1000	2000
C10-C20 (OVAP & BUSTR)	60	120	240	600	1200
C20-C34 (OVAP & BUSTR)	80	160	320	800	1600

Company Confidential & Proprietary

Title: ACID DIGESTION FOR SOIL SAMPLES

[Method: SW846 Method 3050B]

Approvals (Signature/Date):

Technology Specialist	Date 1-2-09	Health & Safety Coordinator	Date 1/02/09
Quality Assurance Manager	Date 1/5/09	Laboratory Director	Date 1/6/09
Technical Director	Date 1/2/09		

This SOP was previously identified as SOP No.NC-IP-010, Rev 0, dated 07/18/08

Copyright Information:

This documentation has been prepared by TestAmerica Analytical Testing Corp. and its affiliates ("TestAmerica"), solely for their own use and the use of their customers in evaluating their qualifications and capabilities in connection with a particular project. The user of this document agrees by its acceptance to return it to TestAmerica upon request and not to reproduce, copy, lend, or otherwise disclose its contents, directly or indirectly, and not to use if for any other purpose other than that for which it was specifically provided. The user also agrees that where consultants or other outside parties are involved in the evaluation process, access to these documents shall not be given to said parties unless those parties also specifically agree to these conditions.

THIS DOCUMENT CONTAINS VALUABLE CONFIDENTIAL AND PROPRIETARY INFORMATION. DISCLOSURE, USE OR REPRODUCTION OF THESE MATERIALS WITHOUT THE WRITTEN AUTHORIZATION OF TESTAMERICA IS STRICTLY PROHIBITED. THIS UNPUBLISHED WORK BY TESTAMERICA IS PROTECTED BY STATE AND FEDERAL LAW OF THE UNITED STATES. IF PUBLICATION OF THIS WORK SHOULD OCCUR THE FOLLOWING NOTICE SHALL APPLY: ©COPYRIGHT 2008 TESTAMERICA ANALYTICAL TESTING CORP. ALL RIGHTS RESERVED.

Facility Distribution No. _____ **Distributed To:** _____

TABLE OF CONTENTS

1. SCOPE AND APPLICATION 3

2. SUMMARY OF METHOD 3

3. DEFINITIONS 3

4. INTERFERENCES 3

5. SAFETY 4

6. EQUIPMENT AND SUPPLIES 5

7. REAGENTS AND STANDARDS 6

8. SAMPLE COLLECTION, PRESERVATION AND STORAGE 7

9. QUALITY CONTROL 7

10. CALIBRATION AND STANDARDIZATION 9

11. PROCEDURE 9

12. DATA ANALYSIS AND CALCULATIONS 11

13. METHOD PERFORMANCE 11

14. POLLUTION PREVENTION 12

15. WASTE MANAGEMENT 12

16. REFERENCES 12

17. MISCELLANEOUS (TABLES, APPENDICES, ETC.) 13

LIST OF APPENDICES:

APPENDIX A - TABLES 15

APPENDIX B - CONTAMINATION CONTROL GUIDELINES 21

Company Confidential & Proprietary

1. SCOPE AND APPLICATION

1.1. This procedure describes the preparation of soil samples for the analysis of certain metals by Inductively Coupled Plasma Atomic Emission Spectroscopy (ICP) and Inductively Coupled Plasma-Mass Spectrometry (ICPMS) as specified in SW846 Method 3050B.

1.2. Samples prepared by the protocols detailed in this SOP may be analyzed by ICP or ICPMS for the elements listed in Table I (Appendix A). Other elements and matrices may be analyzed following digestion by these protocols provided that the method performance criteria specified in Section 13.0 of this SOP are met.

1.3. This method is not a total digestion, but will dissolve almost all metals that could become "environmentally available". By design, metals bound in silicate structures are not dissolved by this procedure, as they are not usually mobile in the environment. This SOP can be applied to metals in solids, sludges, wastes, and sediments.

1.4. This document accurately reflects current laboratory Standard Operating Procedures (SOP) as of the date above. All facility SOPs are maintained and updated as necessary.

2. SUMMARY OF METHOD

2.1. A representative 1 gram (wet weight) portion of sample is digested in nitric acid and hydrogen peroxide. The digestate is refluxed with hydrochloric acid for ICP and ICPMS analysis. The digestates are then filtered and diluted to 100 mL.

3. DEFINITIONS

3.1. Refer to the glossary in the TestAmerica North Canton Quality Assurance Manual (QAM), latest version.

4. INTERFERENCES

4.1. There are numerous routes by which samples may become contaminated. Potential sources of trace metals contamination include metallic or metal-containing labware (e.g., talc gloves which contain high levels of zinc), containers, impure reagents, dirty glassware, improper sample transfers, dirty work areas, atmospheric inputs such as dirt and dust, etc. Be aware of potential sources of contamination, and take appropriate measures to minimize or avoid them. All glassware is cleaned per SOP NC-QA-014.

4.2. The entire work area, including the bench top and fume hood, must be thoroughly cleaned on a routine schedule in order to minimize the potential for environmental contamination.

Company Confidential & Proprietary

4.3. Boron from the glassware may leach into the sample solution during, and following, sample processing. For critical low-level determinations of boron, only quartz and/or plastic labware are recommended.

4.4. Visual interferences or anomalies, such as foaming, emulsions, precipitates, etc., must be documented.

4.5. Allowing samples to boil or go dry during digestion may result in the loss of volatile metals. If this occurs, the sample must be reprepared. Antimony is easily lost by volatilization from hydrochloric media.

4.6. Specific analytical interferences are discussed in each of the determinative methods.

5. SAFETY

5.1. Employees must abide by the policies and procedures in the Corporate Environmental Health and Safety Manual and this document.

5.2. Samples that contain high concentrations of carbonates or organic material or samples that are at elevated pH can react violently when acids are added.

5.3. The following is a list of the materials used in this method, which have a serious or significant hazard rating. **NOTE: This list does not include all materials used in the method. The table contains a summary of the primary hazards listed in the MSDS for each of the materials listed in the table.** A complete list of materials used in the method can be found in the Reagents and Standards section. Employees must review the information in the MSDS for each material before using it for the first time or when there are major changes to the MSDS.

Material (1)	Hazards	Exposure Limit (2)	Signs and symptoms of exposure
Hydrochloric Acid	Corrosive Poison	5 ppm-Ceiling	Inhalation of vapors can cause coughing, choking, inflammation of the nose, throat, and upper respiratory tract, and in severe cases, pulmonary edema, circulatory failure, and death. Can cause redness, pain, and severe skin burns. Vapors are irritating and may cause damage to the eyes. Contact may cause severe burns and permanent eye damage.
Hydrogen Peroxide	Oxidizer Corrosive	1 ppm-TWA	Vapors are corrosive and irritating to the respiratory tract. Vapors are very corrosive and irritating to the eyes and skin.

Company Confidential & Proprietary

Nitric Acid	Corrosive Oxidizer Poison	2 ppm-TWA 4 ppm-STEL	Nitric acid is extremely hazardous; it is corrosive, reactive, an oxidizer, and a poison. Inhalation of vapors can cause breathing difficulties and lead to pneumonia and pulmonary edema, which may be fatal. Other symptoms may include coughing, choking, and irritation of the nose, throat, and respiratory tract. Can cause redness, pain, and severe skin burns. Concentrated solutions cause deep ulcers and stain skin a yellow or yellow-brown color. Vapors are irritating and may cause damage to the eyes. Contact may cause severe burns and permanent eye damage.
1 – Always add acid to water to prevent violent reactions.			
2 – Exposure limit refers to the OSHA regulatory exposure limit.			

5.4 Eye protection that protects against splash, laboratory coat, and appropriate gloves must be worn while samples, standards, solvents, and reagents are being handled. Cut-resistant gloves must be worn doing any other task that presents a strong possibility of getting cut. Disposable gloves that have been contaminated must be removed and discarded; other gloves must be cleaned immediately.

5.5 The acidification of samples containing reactive materials may result in the release of toxic gases, such as cyanides or sulfides. Acidification of samples must be done in a fume hood. The analyst must also be aware of the potential for a vigorous reaction.

5.6 Exposure to chemicals must be maintained **as low as reasonably achievable.** All samples with stickers that read "Caution/Use Hood!" **must** be opened in the hood. Contact the EH&S Coordinator if this is not possible. Solvent and waste containers must be kept closed unless transfers are being made.

5.7 All work must be stopped in the event of a known or potential compromise to the health and safety of a TestAmerica North Canton associate. The situation must be reported **immediately** to the EH&S Coordinator and the Laboratory Supervisor.

5.8 Always carry bulk concentrated acid bottles in appropriate impact proof containers.

5.9 Acid/peroxide spills must be neutralized immediately, flushed with water and cleaned up using appropriate spill kits.

5.10 Discard chipped or broken beakers to prevent injury. Chipped glassware may be fire polished as an alternative to disposal.

6. EQUIPMENT AND SUPPLIES

6.1. Hot plate, digestion block, steam bath, or other heating source capable of maintaining a temperature of 91-99°C

6.2. Calibrated thermometer that covers a temperature range of 0-200°C

6.3. Vapor recovery device (Watch glasses, ribbed or other device)

6.4. Whatman No. 41 filter paper or equivalent

6.5. Funnels or equivalent filtration apparatus

6.6. Analytical balance capable of accurately weighing to the nearest 0.01 grams

6.7. Repeaters or suitable reagent dispensers

6.8. Calibrated automatic pipettes with corresponding pipette tips: 100uL, 500uL, 1mL-5mL

6.9. Class A volumetric flasks

6.10. Plastic digestate storage bottles, such as Corning Snap Seals™ (may be used if their accuracy is documented and is better than 2%)

6.11. Boiling Stones: Ultra Pure PTFE or equivalent

7. REAGENTS AND STANDARDS

7.1. Reagent water must be produced by a Millipore DI system or equivalent. Reagent water must be free of the analytes of interest as demonstrated through the analysis of method blanks as defined in the determinative SOPs.

7.2. Laboratory Control Sample (LCS) and matrix spike (MS) solutions are purchased as custom solutions. All standards must be stored in FEP fluorocarbon or previously unused polyethylene or polypropylene bottles. Stock standard solutions must be replaced prior to the expiration date provided by the manufacturer. If no expiration date is provided, the stock solutions may be used for up to one year and must be replaced sooner if verification from an independent source indicates a problem. Additional information can be fund in SOP NC-QA-017.

7.3. Working ICP LCS/MS spike solution. Prepare the ICP LCS/MS working spike solutions from custom stock standards to the final concentration listed in Table II. The working spike must be prepared in a matrix of 5% HNO_3. This acid (5 mL of concentrated HNO_3 per 100 mL) must be added to the volumetric flask before the addition of the stock standard aliquot. The working ICP LCS solution must be made fresh every three months. Refer to the Standards Logbook for details on standard preparation.

7.4. ICPMS LCS/MS spike solution. Laboratory Control Sample (LCS) and matrix spike (MS) solutions are custom made so the final concentrations after spiking equals the concentrations listed in Table III.

7.5. The LCS and MS samples must contain all the elements designated for analysis in each batch of samples. If a non-routine element is required that is not contained in the custom solution, the individual facility must purchase a solution from the designated vendor that will cover the additional analyte(s) of interest and provide for a final spike concentration that is appropriate to the determinative method.

7.6. Nitric acid (HNO_3), concentrated, trace metal grade or better

7.7. Nitric acid, 1:1 - dilute concentrated HNO_3 with an equal volume of reagent water

Note: When preparing diluted acids, always add acid to water. If the water is added to the acid a violent reaction may occur.

7.8. Hydrochloric acid (HCl), concentrated, trace metal grade or better

7.9. 30% Hydrogen peroxide (H_2O_2), Ultrapure grade

8. SAMPLE COLLECTION, PRESERVATION, AND STORAGE

8.1. Sample holding time for metals included under the scope of this SOP is 180 days from the date of sample collection to the date of analysis.

8.2. Soil samples do not require preservation.

9. QUALITY CONTROL

Table IV (Appendix A) provides a summary of quality control requirements including type, frequency, acceptance criteria, and corrective action.

9.1. Initial Demonstration of Capability

Prior to analysis of any analyte using Method 3050B the following requirements must be met.

9.1.1. Method Detection Limit (MDL) - An MDL must be determined for each analyte/matrix prior to the analysis of any samples. The result of the MDL determination must be below the TestAmerica North Canton reporting limit. Criteria for DoD work is noted in SOP NC-QA-016.

9.1.2. Initial Demonstration Study - This requires the analysis of four QC check samples. The QC check sample is a well-characterized laboratory generated sample used to monitor method performance, which must contain all the analytes of interest. The

results of the initial demonstration study must be acceptable before analysis of samples may begin. The results of the initial demonstration study may be used to extend a method for the analysis of other elements provided all acceptance criteria are met.

9.1.2.1. Four aliquots of the check sample (LCS) are prepared and analyzed using the procedures detailed in this SOP and the determinative SOPs.

9.1.2.2. Calculations and acceptance criteria for QC check samples are given in the determinative SOP NC-MT-012.

9.2. Preparation Batch - A group of up to 20 samples that are of the same matrix and are processed together using the same procedures and reagents. The preparation batch must contain a method blank, an LCS, and a matrix spike/matrix spike duplicate. In some cases, at client request, it may be appropriate to process a matrix spike and sample duplicate in place of the MS/MSD. If clients specify specific samples for MS/MSD, the batch may contain multiple MS/MSD pairs.

9.3. Sample Count - Laboratory generated QC samples (method blanks, LCS, MS/MSD) are not counted towards the maximum 20 samples in a batch. Field QC samples are included in the batch count.

9.4. Method Blank (MB) - One method blank must be processed with each preparation batch. The method blank consists of reagent water containing all reagents specific to the method that is carried through the entire analytical procedure, including preparation and analysis. The method blank is used to identify any system and process interferences or contamination of the analytical system that may lead to the reporting of elevated analyte concentrations or false positive data. Criteria for the acceptance of blanks are contained within the individual analytical method SOPs. If the method blank does not meet the criteria contained within the analytical method SOPs, the blank and all associated samples in the batch must be redigested.

9.4.1. The MB is prepared by weighing a 1g aliquot of boiling chips. The MB is then processed as described in Section 11.9.

9.5. Laboratory Control Sample (LCS) - One aqueous LCS must be processed with each preparation batch. The LCS must contain all analytes of interest and must be carried through the entire analytical procedure. The LCS is used to monitor the accuracy of the analytical process. Ongoing monitoring of the LCS results provides evidence that the laboratory is performing the method within acceptable accuracy and precision guidelines. Criteria for the acceptance of LCS results are contained within the individual analytical method SOPs. Corrective action when LCS results fail to meet control limits will be repreparation and reanalysis of the batch. Table II provide the details regarding the stock, working standards, and final spike concentrations for ICP and ICPMS. Refer to Section 7.4 for instructions on preparation of the aqueous LCS.

9.5.1. The ICP LCS is prepared by spiking a 1g aliquot of boiling chips with 2 mL of the

working LCS/MS spike solution (Section 7.4). The ICPMS LCS is prepared by spiking a 1g aliquot of boiling chips with 1 mL of the LCS/MS solution (Section 7.4). The LCS is then processed as described in Section 11.9.

9.6. Additional information on QC samples can be found in QA Policy QA-003. Ohio VAP projects must reference this SOP instead of policy QA-003 for information on QC samples.

9.7. Matrix Spike/Matrix Spike Duplicate (MS/MSD) - One MS/MSD pair must be processed for each preparation batch. A matrix spike (MS) is a field sample to which known concentrations of target analytes have been added. A matrix spike duplicate (MSD) is a second aliquot of the same sample (spiked identically as the MS) prepared and analyzed along with the sample and matrix spike. Some client specific data quality objectives (DQOs) may require the use of sample duplicates in place of or in addition to MS/MSDs. The MS/MSD results are used to determine the effect of a matrix on the precision and accuracy of the analytical process. Samples identified as field blanks cannot be used for MS/MSD analysis. If any analyte recovery or RPD falls outside the acceptance range, the recovery of that analyte must be in control for the LCS. If the recovery of the LCS is outside limits, corrective action must be taken. Corrective action will include repreparation and reanalysis of the batch. Corrective action when MS results fail to meet control limits does not include repreparation of samples unless the results indicate that a spiking error may have occurred. Table II provides the details regarding the stock, working standards and final matrix spike concentrations for ICP and ICPMS. Refer to Section 7.4 for instructions on preparation of the working matrix spike solutions.

9.7.1. The ICP matrix spike is prepared by spiking a 1g aliquot of sample with 2 mL of the working LCS/MS spike solution (Section 7.4) The ICPMS matrix spike is prepared by spiking a 1g aliquot of sample with 1 mL of the LCS/MS solution (Section 7.4) The matrix spike is then processed as described in Section 11.9.

10. CALIBRATION AND STANDARDIZATION

10.1. Hotblock temperature must be verified daily for each unit used, and must be recorded in a hotblock temperature log.

11. PROCEDURE

11.1. One time procedural variations are allowed only if deemed necessary in the professional judgment of supervision to accommodate variation in sample matrix, chemistry, sample size, or other parameters. Any variation in procedure must be completely documented using a Nonconformance Memo. The Nonconformance Memo must be filed in the project file.

11.2. Any unauthorized deviations from this procedure must also be documented as a nonconformance with a cause and corrective action described.

11.3. The heating procedures are carried out in a properly functioning hood.

Company Confidential & Proprietary

11.4. All samples are to be checked out of Sample Control with an electronic Chain-of-Custody.

11.5. Proper sample identification is extremely important in any preparation procedure. Labeling of beakers and bottles must be done in a manner to ensure connection with the proper sample. An automatic label printing program is used to reduce transcription errors (QuantIMS option).

11.6. Samples are typically logged in as either waters or soils. Wastes, such as organic liquids or sludges and tissues (animal/vegetable), are usually logged in with solid test codes. When initiating prep, examine the sample to see if the sample matches the matrix designation.

11.7. If possible, prepare all the samples of a project at the same time to minimize the QC required and streamline the flow of the project through the lab and Reporting Group.

11.8. Guidelines are provided in the appendices on procedures to minimize contamination of samples and standards. Refer to Appendix B for details.

11.9. Preparation of Soils, Sediments, and Sludges for Analysis by ICP and ICPMS

11.9.1. Mix sample thoroughly by stirring with a clean plastic or wooden spoon or spatula.

11.9.2. For each digestion procedure required (i.e., ICP or ICPMS), weigh a 1g portion of solid and record the exact weight to the nearest 0.01g. A 2g sample size may also be used if needed to meet the reporting limits.

11.9.3. Measure additional aliquots of the designated samples for the MS and MSD analyses.

11.9.4. Add 10 mL of 1:1 HNO_3 and mix the sample.

11.9.5. Heat sample to $95^{o} \pm 4°$ C and reflux for 10 minutes without boiling, using a vapor recovery device.

Note: DO NOT ALLOW SAMPLE TO BOIL OR GO DRY during any part of the digestion. Doing so will result in the loss of analyte and the sample must be reprepared.

11.9.6 Add 5 mL of concentrated HNO_3.

11.9.7 Reflux at $95^{o} \pm 4°$ C for 30 minutes. (Add reagent water, as needed, to ensure that the volume of solution is not reduced to less than 5 mL.)

11.9.8 Add approximately 2 mL of reagent water and 1 mL of 30 % H_2O_2. Care must be taken to ensure that losses do not occur due to excessively vigorous effervescence.

11.9.9 Continue adding 30% H_2O_2 in 1 mL aliquots until effervescence is minimal or sample

appearance is unchanged. Make sure effervescence subsides before each addition of H_2O_2.

Note: Do not add more than a total of 10 mL of 30 % H_2O_2.

11.9.10 Continue heating at $95^o \pm 4°$ C until the volume is reduced to approximately 5-10 mL. Alternatively, the sample may be heated for two hours.

11.9.11 Add 10 mL of concentrated HCL and reflux for an additional 15 minutes without boiling.

11.9.12 Allow the sample to cool.

11.9.13 Filter sample through Whatman 41 filter paper or equivalent into a measuring bottle (for example, Corning Snap Seals™). These may be used if their accuracy is documented and is better than $\pm$ 2%. Rinse sample container and filter paper with reagent water to ensure complete sample transfer.

11.9.14 Dilute sample to 100 mL with reagent water. The sample is now ready for analysis.

11.10. Analytical Documentation

11.10.1. Record all analytical information in the analytical logbook/logsheet, including the analytical data from standards, blanks, LCSs, MS/MSDs, and any corrective actions or modifications to the method.

11.10.2. All standards and reagents are logged into a department standard logbook. All standards are assigned a unique number for identification. Logbooks are reviewed by the supervisor or designee.

12. DATA ANALYSIS AND CALCULATIONS

Not applicable

13. METHOD PERFORMANCE

13.1. Method performance is determined by the analysis of matrix spike and matrix spike duplicate samples as well as method blanks and laboratory control samples. Acceptance criteria are given in the determinative SOPs.

13.2. The initial demonstration study as detailed in Section 9.1.2 must be acceptable before the analysis of field samples under this SOP may begin. The results of the initial demonstration study may be used to extend a method for the analysis of other elements provided all acceptance criteria are met.

13.3. Training Qualification

The Group/Team Leader has the responsibility to ensure this procedure is performed by an associate who has been properly trained in its use and has the required experience.

14. POLLUTION PREVENTION

14.1. It is TestAmerica's policy to evaluate each method and look for opportunities to minimize waste generated (i.e., examine recyling options, ordering chemicals based on quantity needed, preparation of reagents based on anticipated usage and reagent stability). Employees must abide by the policies in Section 13 of the Corporate Environmental Health and Safety Manual (CW-E-M-001) for "Waste Management and Pollution Prevention".

15. WASTE MANAGEMENT

15.1. All waste will be disposed of in accordance with Federal, State and Local regulations. Where reasonably feasible, technological changes have been implemented to minimize the potential for pollution of the environment. Employees will abide by this method and the policies in Section 13 of the Corporate Environmental Health and Safety Manual (CW-E-M-001) for "Waste Management and Pollution Prevention".

15.2. Waste Streams Produced by the Method

15.2.1. The following waste streams are produced when this method is carried out.

15.2.1.1. Acidic waste containing nitric acid generated by the extraction. This waste is disposed of in a designated container labeled "Acid Waste".

15.2.1.2. Contaminated disposable materials utilized for the analysis. This waste is disposed of in a designated container labeled "Solid Waste".

16. REFERENCES

16.1. References

16.1.1. Test Methods for Evaluating Solid Waste, Physical/Chemical Methods, SW-846, 3rd Edition, Final Update III, December 1996, Method 3050B

16.1.2. TestAmerica North Canton Quality Assurance Manual (QAM), current version

16.1.3. TestAmerica Corporate Environmental Health and Safety Manual, CW-E-M-001, and TestAmerica North Canton Facility Addendum and Contingency Plan, current version

16.1.4. Revision History

Historical File:		Revision 2.1: 02/11/00		Revision 2.5: 12/02/04

(formerly CORP-IP0002NC)		Revision 2.2: 09/25/01		Revision 2.6: 07/29/07
		Revision 2.3: 01/18/02		Revision 0: 07/18/08 (NC-IP-010)
		Revision 2.4: 02/19/03		

16.2. Associated SOPs and Policies, latest version

16.2.1. Inductively Coupled Plasma-Atomic Emission Spectroscopy, Spectrometric Method for Trace Element Analysis of Water and Wastes, Methods 6010B and 200.7, NC-MT-012

16.2.2. Inductively Coupled Plasma-Mass Spectrometry, EPA Methods 6020 and 200.8, NC-MT-002

16.2.3. TestAmerica North Canton Quality Control Program, QA-003

16.2.4. Glassware Washing, NC-QA-014

16.2.5. Statistical Evaluation of Data and Development of Control Charts, NC-QA-018

16.2.6. Method Detection Limits and Instrument Detection Limits, CA-Q-S-006 and NC-QA-021

16.2.7. Supplemental Practices for DOD Project Work, NC-QA-016

16.2.8. Standards and Reagents, NC-QA-017

17. MISCELLANEOUS (TABLES, APPENDICES, ETC.)

17.1. Method Deviations

Not applicable

APPENDIX A

TABLES

TABLE I

Method 3050A Approved Analyte List

Element	Symbol	CAS Number
Aluminum	Al	7429-90-5
Antimony	Sb	7440-36-0
Arsenic	As	7440-38-2
Barium	Ba	7440-39-3
Beryllium	Be	7440-41-7
Cadmium	Cd	7440-43-9
Calcium	Ca	7440-70-2
Chromium	Cr	7440-47-3
Cobalt	Co	7440-48-4
Copper	Cu	7440-50-8
Iron	Fe	7439-89-6
Lead	Pb	7439-92-1
Magnesium	Mg	7439-95-4
Manganese	Mn	7439-96-5
Molybdenum	Mo	7439-98-7
Nickel	Ni	7440-02-0
Potassium	K	7440-09-7
Selenium	Se	7782-49-2
Silver	Ag	7440-22-4
Sodium	Na	7440-23-5
Thallium	Tl	7440-28-0
Vanadium	V	7440-62-2
Zinc	Zn	7440-66-6

Company Confidential & Proprietary

TABLE II

ICP Soil Matrix Spike and LCS Levels

Element	Working LCS/MS Standard (mg/L)	Soil MS/LCS Level * (mg/kg)
Aluminum	100	200
Antimony	25	50
Arsenic	100	200
Barium	100	200
Beryllium	2.5	5
Cadmium	2.5	5
Calcium	2500	5000
Chromium	10	20
Cobalt	25	50
Copper	12.5	25
Iron	50	100
Lead	25	50
Magnesium	2500	5000
Manganese	25	50
Molybdenum	50	100
Nickel	25	50
Potassium	2500	5000
Selenium	100	200
Silver	2.5	5
Sodium	2500	5000
Thallium	100	200
Vanadium	25	50
Zinc	25	50
Boron	50	100
Tin	100	200
Titanium	50	100

* Final soil spike concentration based on the addition of 2.0 mL working spike (Section 7.3) to 1.0 g of sample/100 mL final volume (assumes 100% solids).

Company Confidential & Proprietary

TABLE III

ICPMS Soil Matrix Spike and LCS Levels

Element	Working LCS/MS Standard (mg/kg)	Soil MS/LCS Level * (mg/kg)
Aluminum	1000	1000
Antimony	10	10
Arsenic	10	10
Barium	10	10
Beryllium	10	10
Cadmium	10	10
Calcium	1000	1000
Chromium	10	10
Cobalt	10	10
Copper	10	10
Iron	1000	1000
Lead	10	10
Magnesium	1000	1000
Manganese	10	10
Molybdenum	10	10
Nickel	10	10
Potassium	1000	1000
Selenium	10	10
Silver	10	10
Sodium	1000	1000
Strontium	10	10
Thallium	10	10
Vanadium	10	10
Zinc	10	10
Boron	10	10
Tin	10	10
Titanium	10	10

* Final soil spike concentration based on the addition of 1.0 mL working spike (Section 7.4) to 1.0 g of sample/100 mL final volume (assumes 100% solids).

Company Confidential & Proprietary

TABLE IV

Summary of Quality Control Requirements

QC PARAMETER	FREQUENCY	ACCEPTANCE CRITERIA	CORRECTIVE ACTION
Method Blank	One per sample preparation batch of up to 20 samples	Refer to determinative SOPs: NC-MT-002 NC-MT-012	Redigest and re-analyze samples
Laboratory Control Sample (LCS)	One per sample preparation batch of up to 20 samples	Refer to determinative SOPs: NC-MT-002 NC-MT-012	Redigest and re-analyze all samples associated with the LCS
Matrix Spike	One per sample preparation batch of up to 20 samples	Refer to determinative SOPs: NC-MT-002 NC-MT-012	Reprep not required unless preparation error suspected
Matrix Spike Duplicate	See Matrix Spike	Refer to determinative SOPs: NC-MT-002 NC-MT-012	See Corrective Action for Matrix Spike

Company Confidential & Proprietary

APPENDIX B. CONTAMINATION CONTROL GUIDELINES

The following procedures are strongly recommended to prevent contamination:

All glassware must be washed with detergent and tap water and rinsed with 1:1 nitric acid followed by deionized water.

Proper laboratory housekeeping is essential in the reduction of contamination in the Metals Lab. All work areas must be kept scrupulously clean.

Powdered gloves must not be used in the Metals Lab since the powder contains zinc, as well as other metallic analytes.

Glassware must be periodically checked for cracks and etches and discarded if found. Etched glassware can cause cross contamination of any metallic analytes.

The following are helpful hints in the identification of the source of contaminants:

Reagents or standards can contain contaminants or be contaminated with the improper use of a pipette.

Improper cleaning of glassware can cause contamination.

Separate glassware if an unusually high sample is analyzed and soak with sulfuric acid prior to routine cleaning.

Company Confidential & Proprietary

Title: ACID DIGESTION FOR AQUEOUS SAMPLES

[Methods: SW846 and MCAWW 200 Series]

Approvals (Signature/Date):

Technology Specialist	1-2-09 Date	Health & Safety Coordinator	1/02/09 Date
Quality Assurance Manager	1/5/09 Date	Technical Director	1/2/09 Date
Laboratory Director	1/5/09 Date		

This SOP was previously identified as SOP No. CORP-IP-0003NC, Rev 1.6, dated 02/07/07

Copyright Information:

This documentation has been prepared by TestAmerica Analytical Testing Corp. and its affiliates ("TestAmerica"), solely for their own use and the use of their customers in evaluating their qualifications and capabilities in connection with a particular project. The user of this document agrees by its acceptance to return it to TestAmerica upon request and not to reproduce, copy, lend, or otherwise disclose its contents, directly or indirectly, and not to use if for any other purpose other than that for which it was specifically provided. The user also agrees that where consultants or other outside parties are involved in the evaluation process, access to these documents shall not be given to said parties unless those parties also specifically agree to these conditions.

THIS DOCUMENT CONTAINS VALUABLE CONFIDENTIAL AND PROPRIETARY INFORMATION. DISCLOSURE, USE OR REPRODUCTION OF THESE MATERIALS WITHOUT THE WRITTEN AUTHORIZATION OF TESTAMERICA IS STRICTLY PROHIBITED. THIS UNPUBLISHED WORK BY TESTAMERICA IS PROTECTED BY STATE AND FEDERAL LAW OF THE UNITED STATES. IF PUBLICATION OF THIS WORK SHOULD OCCUR THE FOLLOWING NOTICE SHALL APPLY: ©COPYRIGHT 2008 TESTAMERICA ANALYTICAL TESTING CORP. ALL RIGHTS RESERVED.

Facility Distribution No. _____ **Distributed To:** _____

TABLE OF CONTENTS

1. **SCOPE AND APPLICATION** 3
2. **SUMMARY OF METHOD** 3
3. **DEFINITIONS** 3
4. **INTERFERENCES** 4
5. **SAFETY** 5
6. **EQUIPMENT AND SUPPLIES** 6
7. **REAGENTS AND STANDARDS** 7
8. **SAMPLE COLLECTION, PRESERVATION AND STORAGE** 8
9. **QUALITY CONTROL** 8
10. **CALIBRATION AND STANDARDIZATION** 10
11. **PROCEDURE** 11
12. **DATA ANALYSIS AND CALCULATIONS** 14
13. **METHOD PERFORMANCE** 14
14. **POLLUTION PREVENTION** 14
15. **WASTE MANAGEMENT** 15
16. **REFERENCES** 15
17. **MISCELLANEOUS (TABLES, APPENDICES, ETC.)** 16

LIST OF APPENDICES

APPENDIX A - TABLES 20
APPENDIX B - CONTAMINATION CONTROL GUIDELINES 27

Company Confidential & Proprietary

1. SCOPE AND APPLICATION

1.1. This procedure describes the preparation of aqueous samples for the analysis of certain metals by Inductively Coupled Plasma Atomic Emission Spectroscopy (ICP), and Inductively Coupled Plasma-Mass Spectrometry (ICPMS) using the MCAWW 200 series methods (NPDES) and SW846 Methods 3005A, and 3010A.

1.2. The applicability of each of these preparation protocols to specific analytes is detailed in Tables I and II (Appendix A). Additional elements may be analyzed following digestion by these protocols provided that the method performance criteria specified in Section 13.0 of this SOP are met.

1.3. This SOP provides procedures applicable to the preparation of dissolved, suspended, total recoverable and total elements in ground water, aqueous samples, certain aqueous sludges, and leachates/extracts.

1.4. SW-846 Method 3005A / MCAWW Method 200.8 are used to prepare surface and groundwater samples for total recoverable and dissolved metals determination by ICP and ICPMS.

1.5. MCAWW Method 200.7 is used to prepare surface water, domestic and industrial waste samples for total, total recoverable, and dissolved metals determination by ICP.

1.6. SW-846 Method 3010A is used to prepare aqueous samples, mobility-procedure extracts, and wastes that contain suspended solids for total metals analysis by ICP.

2. SUMMARY OF METHOD

2.1. Method 3005A / Method 200.7 / Method 200.8 - Preparation for Total Recoverable or Dissolved Metals Analysis by ICP and ICPMS

2.1.1 A representative aliquot of sample is heated with nitric and hydrochloric acids and reduced to a low volume. The digestate is filtered (if necessary) and diluted to volume.

2.2. Method 3010A / Method 200.7 / - Preparation for Total Metals Analysis by ICP

2.2.1 A representative aliquot of sample is refluxed with nitric acid. After the digestate has been reduced to a low volume, it is refluxed with hydrochloric acid, filtered (if necessary), and diluted to volume.

3. DEFINITIONS

Company Confidential & Proprietary

Additional definitions of terms used in this SOP may be found in the glossary of the QAM.

3.1. Dissolved Metals: Those elements which pass through an 0.45 um membrane (sample is acidified after filtration).

3.2. Total Metals: The concentration determined on an unfiltered sample following digestion.

3.3. Total Recoverable Metals: The concentration determined on an unfiltered sample following treatment with hot dilute mineral acid.

4. INTERFERENCES

4.1. There are numerous routes by which samples may become contaminated. Potential sources of trace metals contamination include metallic or metal-containing labware (e.g., talc gloves which contain high levels of zinc), containers, impure reagents, dirty glassware, improper sample transfers, dirty work areas, atmospheric inputs such as dirt and dust, etc. Be aware of potential sources of contamination and take appropriate measures to minimize or avoid them. All glassware is cleaned per SOP NC-QA-014.

4.2. The entire work area, including the bench top and fume hood, must be thoroughly cleaned on a routine schedule in order to minimize the potential for environmental contamination. Refer to Appendix B for additional contamination control guidelines.

4.3. Boron from the glassware will migrate into the sample solution during and following sample processing. For critical low level determinations of boron, it is recommended quartz or plastic labware be used.

4.4. Physical interference effects may contribute to inaccuracies in the determinations of trace elements. Oils, solvents, and other matrices may not be digested using these methods if they are not soluble with acids.

4.5. Visual interferences or anomalies (such as dilution due to oily matrix) must be documented.

4.6. Allowing samples to boil or go dry during digestion may result in the loss of volatile metals. If this occurs the sample must be reprepared. Antimony is easily lost by volatilization from hydrochloric acid media.

4.7. Precipitation of silver chloride (AgCl) may occur when chloride ions and high concentrations of silver (i.e., greater than 1 mg/L) are present in the sample.

4.8. Specific analytical interferences are discussed in each of the determinative methods.

Company Confidential & Proprietary

5. SAFETY

5.1. Employees must abide by the policies and procedures in the Corporate Environmental Health and Safety Manual and this document.

5.2. Samples that contain high concentrations of carbonates or organic material or samples that are at elevated pH can react violently when acids are added.

5.3. The following is a list of the materials used in this method, which have a serious or significant hazard rating. **NOTE: This list does not include all materials used in the method. The table contains a summary of the primary hazards listed in the MSDS for each of the materials listed in the table.** A complete list of materials used in the method can be found in the Reagents and Standards section. Employees must review the information in the MSDS for each material before using it for the first time or when there are major changes to the MSDS.

Material (1)	Hazards	Exposure Limit (2)	Signs and symptoms of exposure
Hydrochloric Acid	Corrosive Poison	5 ppm-Ceiling	Inhalation of vapors can cause coughing, choking, inflammation of the nose, throat, and upper respiratory tract, and in severe cases, pulmonary edema, circulatory failure, and death. Can cause redness, pain, and severe skin burns. Vapors are irritating and may cause damage to the eyes. Contact may cause severe burns and permanent eye damage.
Nitric Acid	Corrosive Oxidizer Poison	2 ppm-TWA 4 ppm-STEL	Nitric acid is extremely hazardous; it is corrosive, reactive, an oxidizer, and a poison. Inhalation of vapors can cause breathing difficulties and lead to pneumonia and pulmonary edema, which may be fatal. Other symptoms may include coughing, choking, and irritation of the nose, throat, and respiratory tract. Can cause redness, pain, and severe skin burns. Concentrated solutions cause deep ulcers and stain skin a yellow or yellow-brown color. Vapors are irritating and may cause damage to the eyes. Contact may cause severe burns and permanent eye damage.
1 – Always add acid to water to prevent violent reactions.			
2 – Exposure limit refers to the OSHA regulatory exposure limit.			

5.4. Eye protection that protects against splash, laboratory coat, and appropriate gloves must be worn while samples, standards, solvents, and reagents are being handled. Cut-resistant gloves must be worn doing any other task that presents a strong possibility of getting cut. Disposable gloves that have been contaminated must be removed and discarded; other gloves must be cleaned immediately.

Company Confidential & Proprietary

5.5. The acidification of samples containing reactive materials may result in the release of toxic gases, such as cyanides or sulfides. Acidification of samples must be done in a fume hood. The analyst should also be aware of the potential for a vigorous reaction.

5.6. Exposure to chemicals must be maintained **as low as reasonably achievable.** All samples with stickers that read "Caution/Use Hood!" **must** be opened in the hood. Contact the EH&S Coordinator if this is not possible. Solvent and waste containers must be kept closed unless transfers are being made.

5.7. All work must be stopped in the event of a known or potential compromise to the health and safety of a TestAmerica associate. The situation must be reported **immediately** to the EH&S Coordinator and the Laboratory Supervisor.

5.8. Always carry bulk concentrated acid bottles in appropriate impact proof containers.

5.9. Acid spills must be neutralized immediately, flushed with water, and cleaned up using appropriate spill kits.

5.10. Discard chipped or broken beakers to prevent injury. Chipped glassware may be fire-polished as an alternative to disposal.

6. EQUIPMENT AND SUPPLIES

6.1. Hot plate, digestion block, or other adjustable heating source capable of maintaining a temperature of 90-95°C

6.2. Calibrated thermometer that covers a temperature range of 0-200°C

6.3. Griffin beakers of assorted sizes or equivalent. Equivalent containers may be disposable digestion cups for digestion blocks which are certified by the manufacturer and calibrated by the laboratory.

6.4. Watch glasses, ribbed or equivalent

6.5. Whatman No. 41 filter paper or equivalent

6.6. Funnels or equivalent filtration apparatus

6.7. Graduated cylinder or equivalent capable of measuring 50 mL within 3% accuracy

6.8. Analytical balance capable of accurately weighing to the nearest 0.01 grams

6.9. Repeaters or suitable reagent dispensers

6.10. Calibrated automatic pipettes with corresponding pipette tips

6.11. Class A volumetric flasks

6.12. pH indicator strips (pH range 0 - 6)

6.13. Plastic digestate storage bottles, such as Corning Snap Seals (may be used if their accuracy is documented and is better than 2%)

7. REAGENTS AND STANDARDS

7.1. Reagent water must be produced by a Millipore DI system or equivalent. Reagent water must be free of the analytes of interest as demonstrated through the analysis of method blanks as defined in the determinative SOPs.

7.2. Laboratory Control Sample (LCS) and matrix spike (MS) solutions are purchased as custom solutions. All standards must be stored in FEP fluorocarbon or previously unused polyethylene or polypropylene bottles. Stock standard solutions must be replaced prior to the expiration date provided by the manufacturer. If no expiration date is provided, the stock solutions may be used for up to one year and must be replaced sooner if verification from an independent source indicates a problem. Additional information can be found in SOP NC-QA-017.

7.3. Working ICP LCS/MS spike solution: Prepare the ICP LCS/MS working spike solution from custom stock standards to the final concentration listed in Table III. The working spike must be prepared in a matrix of 5% HNO_3. This acid (5 mL of concentrated HNO_3 per 100 mL) must be added to the volumetric flask before the addition of the stock standard aliquot. The working ICP LCS solution must be made fresh every three months.

7.4. The ICPMS LCS/MS spike solution is provided directly by the vendor. No further standard preparation is necessary.

7.5. The TCLP MS working spike solution is provided directly by the vendor, no further standard preparation is necessary. Refer to Table V for final digestate spike concentrations.

7.6. The LCS and MS samples must contain all the elements designated for analysis in each batch of samples. If a non-routine element is required that is not contained in the custom solution, the individual facility must purchase a solution from the designated vendor that will cover the additional analyte(s) of interest and provide for a final spike concentration that is appropriate to the determinative method.

Company Confidential & Proprietary

7.7. Aqueous laboratory control samples (LCS) and matrix spike samples are prepared as described in Sections 9.5 and 9.6. Refer to Tables III and IV (Appendix A) for details regarding the stock, working standard and final digestate spike concentrations for ICP and ICPMS LCS and matrix spike preparations.

7.8. Nitric acid (HNO_3), concentrated, trace metal grade or better

7.9. Hydrochloric acid (HCl), concentrated, trace metal grade or better

7.10. Hydrochloric acid, 1:1 - dilute concentrated HCl with an equal volume of reagent water.

Note: When preparing diluted acids, always add acid to water. If the water is added to the acid, a violent reaction may occur.

8. SAMPLE COLLECTION, PRESERVATION AND STORAGE

8.1. Sample holding time for metals included under the scope of this SOP is 180 days from the date of collection to the date of analysis.

8.2. Aqueous samples are preserved with nitric acid to a pH of <2 and must be stored in either plastic or glass. If boron is to be determined, plastic containers are preferred. Refrigeration is not required. Preservation must be verified prior to analysis.

8.3. For dissolved metals analysis, the samples must be filtered through a 0.45 um filter prior to preservation. Filtration must be done in the field. In the event that samples are not field filtered, filtration occurs in the laboratory prior to preparation.

9. QUALITY CONTROL

Table VI (Appendix A) provides a summary of quality control requirements including type, frequency, acceptance criteria and corrective action.

9.1. Preparation Batch: A group of up to 20 samples that are of the same matrix and are processed together using the same procedures and reagents. The preparation batch must contain a method blank, an LCS, and a matrix spike/matrix spike duplicate. In some cases, at client request, it may be appropriate to process a matrix spike and sample duplicate in place of the MS/MSD. If clients specify specific samples for MS/MSD, the batch may contain multiple MS/MSD pairs. In cases where there is insufficient sample volume to perform an MS/MSD, an LCS/LCS duplicate is required.

9.2. Sample Count: Laboratory generated QC samples (method blanks, LCS, MS/MSD) are not included in the sample count for determining the size of a preparation batch.

9.3. Method Blank (MB): One method blank must be processed with each preparation batch. The method blank consists of reagent water containing all reagents specific to the method that is carried through the entire analytical procedure, including preparation and analysis. The method blank is used to identify any system and process interferences or contamination of the analytical system that may lead to the reporting of elevated analyte concentrations or false positive data.

9.3.1 Aqueous method blanks are prepared by taking 50 mL of reagent water through the appropriate procedure as described in Section 11.

9.3.2 TCLP method blanks are prepared by taking 50 mL of leachate fluid through the appropriate procedure as described in Section 11.

9.4. Laboratory Control Sample (LCS): One aqueous LCS must be processed with each preparation batch. The LCS must contain all analytes of interest and must be carried through the entire analytical procedure. The LCS is used to monitor the accuracy of the analytical process. Ongoing monitoring of the LCS results provides evidence that the laboratory is performing the method within acceptable accuracy and precision guidelines. Criteria for the acceptance of LCS results are contained within the individual analytical method SOPs. Refer to Sections 7.3 and 7.4 for instructions on preparation of the aqueous LCS spike solution.

9.4.1 The aqueous LCS is prepared by spiking a 50 mL aliquot of reagent water with 1.0 mL for ICP and 0.5 mL for ICPMS of the working LCS/MS spike solution (Sections 7.3 or 7.4). The LCS is then processed through the appropriate procedure as described in Section 11.

Note: TCLP LCS is prepared by taking 50 mL of leachate fluid through the appropriate procedure as described in Section 11.

9.5. Additional information on QC samples can be found in QA Policy QA-003.

9.6. Matrix Spike/Matrix Spike Duplicate (MS/MSD): One MS/MSD pair must be processed for each preparation batch. A matrix spike (MS) is a field sample to which known concentrations of target analytes have been added. A matrix spike duplicate (MSD) is a second aliquot of the same sample (spiked identically as the MS) prepared and analyzed along with the sample and matrix spike. Some client-specific data quality objectives (DQOs) may require the use of sample duplicates in place of or in addition to MS/MSDs. The MS/MSD results are used to determine the effect of a matrix on the precision and accuracy of the analytical process. Samples identified as field blanks cannot be used for MS/MSD analysis.

9.6.1 The aqueous matrix spike sample is prepared by spiking a 50 mL aliquot of a sample with 1.0 mL for ICP and 0.5 mL for ICPMS of the working LCS/MS

Company Confidential & Proprietary

spike solution (Sections 7.3 or 7.4). The matrix spike sample is then processed as described in Section 11.

9.6.2 The TCLP matrix spike sample is prepared by spiking a 50 mL aliquot of a leachate with 0.5 mL of the working TCLP spike solution (Section 7.5). The matrix spike sample is then processed as described in Section 11.

NOTE: The TCLP matrix spike must be added prior to preservation of the leachate.

NOTE: If analytes outside of the RCRA list are requested, l mL of additional spiking solution(s) are added.

9.6.3 If insufficient sample is available to process a MS/MSD, then a second LCS must be processed.

9.7. Control Limits

9.7.1 Control limits are established by the laboratory as described in SOP NC-QA-018.

9.7.2 Laboratory control limits are internally generated and updated periodically unless method specified. Control limits are easily accessible via LIMS (QC Browser program).

9.8 Method Detection Limits (MDLs) and MDL Checks

9.8.1 MDLs and MDL Checks are established by the laboratory as described in SOPs NC-QA-021 and CA-Q-S-006.

9.8.2 MDLs are easily accessible via LIMS (QC Browser program)

9.9 Nonconformance and Corrective Action

9.9.1 Any deviations from QC procedures must be documented as a nonconformance with applicable cause and corrective action approved by the facility QA Manager.

10. CALIBRATION AND STANDARDIZATION

10.1 The hotplate/hotblock temperature must be verified daily for each hotplate used, and must be recorded on a hotplate/hotblock temperature log.

Company Confidential & Proprietary

11. PROCEDURE

11.1. One-time procedural variations are allowed only if deemed necessary in the professional judgment of supervision to accommodate variation in sample matrix, chemistry, sample size, or other parameters. Any variation in procedure must be completely documented using a Nonconformance Memo. The Nonconformance Memo must be filed in the project file.

11.2. Any unauthorized deviations from this procedure must also be documented as a nonconformance with a cause and corrective action described.

11.3. All digestion procedures must be carried out in a properly functioning hood.

11.4. All samples are to be checked out of Sample Control with an electronic chain of custody.

11.5. Proper sample identification is extremely important in any preparation procedure. Labeling of beakers and bottles must be done in a manner to ensure connection with the proper sample.

11.6. Samples are typically logged in as either waters or soils. Wastes such as organic liquids or sludges and tissues (animal/vegetable) are usually logged in with solid test codes. When initiating prep, examine the sample to see if the sample matches the matrix designation. If the sample is logged in as aqueous but it appears more like a waste (biphasic, sludge like, organic liquid, lots of sediment, etc.), contact the lab supervisor or project manager for further instructions. In some cases, it may be more appropriate to process these samples as solids.

11.7. If possible, prepare all the samples of a project at the same time to minimize the QC required and streamline the flow of the project through the lab and Reporting group.

11.8. Guidelines are provided in the appendices on procedures to minimize contamination of samples and standards.

11.9. For DoD work, refer to SOP NC-QA-016 for specific details.

11.10. The following procedure must be followed for all aqueous sample preparations.

11.10.1 Mix sample by shaking the container.

11.10.2 Measure 50 mL of the sample into a calibrated digestion tube. (Beakers may be used for oil matrices.)

Company Confidential & Proprietary

11.10.3 Measure two extra aliquots of sample selected for the MS/MSD analysis. Spike each aliquot with the appropriate spiking solutions (Sections 7.3 to 7.5 and 9.6).

11.10.4 Measure 50 mL of reagent water into a calibrated digestion tube for the method blank.

11.10.5 Measure 50 mL of reagent water into a calibrated digestion tube for the LCS and add the appropriate spiking solutions (Sections 7.3 to 7.5 and 9.6).

11.11. Method 3005A / Method 200.7 / Method 200.8 - Preparation for Total Recoverable or Dissolved Metals Analysis by ICP / ICPMS

11.11.1 To the sample container, add 1 mL of concentrated HNO_3 and 2.5 mL of concentrated HCl.

11.11.2 Cover with ribbed watch glass.

11.11.3 Heat at 90-95°C until volume is reduced to between 15 and 20 mL. For DoD samples, the final volume is reduced to between 5 and 10 mL.

NOTE: DO NOT ALLOW SAMPLE TO BOIL OR GO DRY. Doing so will result in the loss of analyte and the sample must be reprepared.

11.11.4 Cool the beaker in a fume hood.

11.11.5 Filter sample, if insoluble materials are present, through Whatman 41 filter paper into a plastic storage container, such as a Corning Snap Seal™

Note: If any samples in a preparation batch are filtered, the method blank and LCS associated with that batch must also be filtered.

11.11.6 Rinse container and filter paper with reagent water to ensure complete sample transfer.

11.11.7 Adjust the final volume to 50 mL with reagent water in the Snap Seal™ container if the digestate was filtered or in the hot block digestion tube if filtering was not necessary. The sample is now ready for analysis.

11.12. Method 3010A / Method 200.7 - Preparation for Total Metals Analysis by ICP Spectroscopy

11.12.1 To the sample container, add 3.0 mL of concentrated HNO_3.

11.12.2 Cover with ribbed watch glass.

11.12.3 Place container on hotblock 90-95°C, and evaporate to a volume of 15-20 mL, while ensuring that no portion of the bottom of the beaker is allowed to go dry. For DoD projects, the sample is evaporated to 5-10 mL.

NOTE: DO NOT ALLOW SAMPLE TO BOIL OR GO DRY. Doing so will result in the loss of analyte and the sample must be re-prepared.

11.12.4 Add 5 mL of 1:1 HCl.

11.12.5 Cover and reflux for an additional 15 minutes to dissolve precipitate or residue. Cool in a fume hood.

11.12.6 Filter sample, if insoluble materials are present, through Whatman 41 filter paper into a plastic storage container, such as a Corning Snap Seal™.

Note: If any samples in the QC batch are filtered, the method blank and LCS associated with that batch must also be filtered.

11.12.7 Rinse container and filter paper with reagent water to ensure complete sample transfer.

11.12.8 Adjust final volume to 50 mL with reagent water in the Snap Seal™ container if the digestate was filtered, or in the hot block digestion tube if filtering was not necessary. The sample is now ready for analysis.

11.13. Analytical Documentation

11.13.1 Record all analytical information in the analytical logbook/logsheet, including the analytical data from standards, blanks, LCSs, MS/MSDs, and any corrective actions or modifications to the method.

11.13.2 All standards and reagents are logged into a department standard logbook. All standards are assigned a unique number for identification. Logbooks are reviewed by the supervisor or designee.

11.13.3 Documentation such as all associated instrument printouts (final runs, screens, reruns, QC samples, etc.) and daily calibration data corresponding to all final runs is available for each data file.

Company Confidential & Proprietary

11.13.4 Sample results and associated QC are entered into LIMs after final technical review.

12. DATA ANALYSIS AND CALCULATIONS

Not applicable

13. METHOD PERFORMANCE

13.1. Initial Demonstration

13.1.1. Each laboratory must make an initial demonstration of capability for each individual method. This requires analysis of four QC Check samples. The QC check sample is a well-characterized laboratory generated sample used to monitor method performance, which should contain all the analytes of interest. The spiking level should be equivalent to a mid-level calibration. (For certain tests more than one set of QC check samples may be necessary in order to demonstrate capability for the full analyte list.)

13.1.2. Four aliquots of the QC check sample are analyzed using the same procedures used to analyze samples, including sample preparation.

13.1.3. Calculations and acceptance criteria for the QC check samples are given in the determinative SOPs.

13.2. Training Qualification

13.2.1 The Group/Team Leader has the responsibility to ensure this procedure is performed by an associate who has been properly trained in its use and has the required experience.

13.2.2 Method validation information (where applicable) in the form of laboratory demonstrations of capabilities is maintained for this method in the laboratory QA files.

14. POLLUTION PREVENTION

14.1. It is TestAmerica's policy to evaluate each method and look for opportunities to minimize waste generated (i.e., examine recycling options, ordering chemicals based on quantity needed, preparation of reagents based on anticipated usage, and reagent stability). Employees must abide by the policies in Section 13 of the Corporate Environmental Health and Safety Manual (CW-E-M-001) for "Waste Management and Pollution Prevention".

Company Confidential & Proprietary

15. WASTE MANAGEMENT

15.1. All waste must be disposed of in accordance with Federal, State and Local regulations. Where reasonably feasible, technological changes have been implemented to minimize the potential for pollution of the environment. Employees must abide by this method and the policies in Section 13 of the Corporate Environmental Health and Safety Manual (CW-E-M-001) for "Waste Management and Pollution Prevention".

15.2. Waste Streams Produced by the Method

15.2.1 The following waste streams are produced when this method is carried out.

15.2.1.1 Acidic waste containing nitric acid generated by the extraction. This waste is disposed of in the designated container labeled "Acid Waste".

15.2.1.2 Contaminated disposable materials utilized for the analysis. This waste is disposed of in a designated container identified as "Solid Waste".

15.3. Laboratory personnel assigned to perform hazardous waste disposal procedures must have a working knowledge of the established procedures and practices TestAmerica. They must have training on the hazardous waste disposal practices upon initial assignment to these tasks followed by an annual refresher training.

16. REFERENCES

16.1. References

16.1.1 Test Methods for Evaluating Solid Waste, Physical/Chemical Methods, SW-846, 3rd Edition, Final Update I, Revision 1, July 1992. Methods 3005A and 3010A

16.1.2 Methods for the Chemical Analysis of Water and Waste (MCAWW), 1983

16.1.3 TestAmerica North Canton Quality Assurance Manual (QAM), current version

16.1.4 TestAmerica Corporate Environmental Health and Safety Manual, CW-E-M-001, and TestAmerica North Canton Facility Addendum and Contingency Plan, current version

Company Confidential & Proprietary

16.1.5 Revision History

Historical File:		Revision 1.2: 03/20/00		Revision 1.6: 02/07/07
(formerly CORP-IP-0003NC)		Revision 1.3: 09/25/01		Revision 0: 09/30/08 (NC-IP-011)
		Revision 1.4: 02/19/03		
		Revision 1.5: 12/07/04		

16.2. Associated SOPs and Policies, current version

16.2.1 TestAmerica QC Program, QA-003

16.2.2 Glassware Washing, NC-QA-014

16.2.3 Statistical Evaluation of Data and Development of Control Charts, NC-QA-018

16.2.4 Method Detection Limits and Instrument Detection Limits, CA-Q-S-006 and NC-QA-021

16.2.5 Supplemental Practices for DoD Project Work, NC-QA-016

16.2.6 Standards and Reagents, NC-QA-017

16.2.7 Subsampling, NC-IP-001

16.2.8 Inductively Coupled Plasma-Atomic Emission Spectroscopy, Spectrometric Method for Trace Element Analyses, SW846 Methods 6010A, 6010B, and 200.7, NC-MT-012

17. MISCELLANEOUS (TABLES, APPENDICES, ETC.)

17.1. Modifications/Interpretations from reference methods

17.1.1 Modifications applicable to SW-846 reference methods

17.1.1.1 The referenced methods as well as Table 3-1 of SW-846 refer to the use of a 100 mL aliquot for digestion. This SOP requires the use of a 50 mL sample size to reduce waste generation. The use of reduced sample volumes are supported in EPA's document "Response to Public Comments Background Document, Promulgation of the Second Update to SW-846, Third Edition" dated November 3, 1994. This document stated "flexibility to alter digestion volumes is

addressed and "allowed" by Table 3-1 and is also inherently allowed by specific digestion methods. Table 3-1 is only to be used as guidance when collecting samples. EMSL-Ci has also taken the stance that "reduction in sample size and appropriate corresponding reduction in sample volume is not considered a significant change in the methodology." Additionally, in written correspondence from the Office of Solid Waste, Oliver Fordham stated " As a "representative sample" can be assured, scaling causes no loss of precision and accuracy in the analysis."

17.1.2 Modifications Specific to Method 3010A

17.1.2.1 Section 11.11.3 of this SOP requires the sample be reduced to a volume of 15 - 20 mL. Section 7.2 of Method 3010A states the volume should be reduced to 3 mL, but also states that no portion of the bottom of the beaker should go dry. The SOP required volume is a closer approximation of the volume required to provide an adequate covering of the beaker so as to prevent the loss of critical analytes through volatilization.

17.1.3 Modifications Specific to MCAWW Methods

17.1.3.1 It was determined by technical review that several of the MCAWW methods were equivalent to the SW-846 methods and therefore were combined under the scope of this SOP as described in Section 11.0. The nature of the differences were deemed insignificant in regards to the amount of acid added and the evaporative volume based on the flexibility allowed by the methods (i.e., add additional acid as required) and the subjective wording of the methods (i.e., evaporate to near dryness vs. an exact volume).

Company Confidential & Proprietary

APPENDIX A

TABLES

Company Confidential & Proprietary

TABLE I. Approved Preparation Method Analytes - SW846

ELEMENT	Symbol	CAS Number	3005A	3010 A
Aluminum	Al	7429-90-5	X	X
Antimony	Sb	7440-36-0	X	
Arsenic	As	7440-38-2	X	X
Barium	Ba	7440-39-3	X	X
Beryllium	Be	7440-41-7	X	X
Cadmium	Cd	7440-43-9	X	X
Calcium	Ca	7440-70-2	X	X
Chromium	Cr	7440-47-3	X	X
Cobalt	Co	7440-48-4	X	X
Copper	Cu	7440-50-8	X	X
Iron	Fe	7439-89-6	X	X
Lead	Pb	7439-92-1	X	X
Magnesium	Mg	7439-95-4	X	X
Manganese	Mn	7439-96-5	X	X
Molybdenum	Mo	7439-98-7	X	X
Nickel	Ni	7440-02-0	X	X
Potassium	K	7440-09-7	X	X
Selenium	Se	7782-49-2	X	X
Silver	Ag	7440-22-4	X	X
Sodium	Na	7440-23-5	X	X
Thallium	Tl	7440-28-0	X	X
Vanadium	V	7440-62-2	X	X
Zinc	Zn	7440-66-6	X	X

X - Designates that the preparation method is approved for an element.

Note: Additional elements may be analyzed following digestion by these protocols provided the method performance criteria specified in Section 13.0 of the SOP are met.

Company Confidential & Proprietary

TABLE II. Approved Preparation Method Analytes – NPDES

ELEMENT	Symbol	CAS Number	200.7 (9.4)	200.7 (9.3)
Aluminum	Al	7429-90-5	X	X
Antimony	Sb	7440-36-0	X	X
Arsenic	As	7440-38-2	X	X
Boron	B	7440-42-8	X	X
Barium	Ba	7440-39-3	X	X
Beryllium	Be	7440-41-7	X	X
Cadmium	Cd	7440-43-9	X	X
Calcium	Ca	7440-70-2	X	X
Chromium	Cr	7440-47-3	X	X
Cobalt	Co	7440-48-4	X	X
Copper	Cu	7440-50-8	X	X
Iron	Fe	7439-89-6	X	X
Lead	Pb	7439-92-1	X	X
Magnesium	Mg	7439-95-4	X	X
Manganese	Mn	7439-96-5	X	X
Molybdenum	Mo	7439-98-7	X	X
Nickel	Ni	7440-02-0	X	X
Potassium	K	7440-09-7	X	X
Selenium	Se	7782-49-2	X	X
Silicon	Si	7631-86-9	X	X
Silver	Ag	7440-22-4	X	X
Sodium	Na	7440-23-5	X	X
Thallium	Tl	7440-28-0	X	X
Vanadium	V	7440-62-2	X	X
Zinc	Zn	7440-66-6	X	X

X - Designates that the preparation method is approved for an element

Note: Additional elements may be analyzed following digestion by these protocols provided the method performance criteria specified in Section 13.0 of the SOP are met.

TABLE III. ICP Matrix Spike and Aqueous Laboratory Control Sample Levels

ELEMENT	Working LCS/MS Standard (mg/L)	Aqueous LCS/ MS Level * (ug/l)
Aluminum	100	2000
Antimony	25	500
Arsenic	100	2000
Barium	100	2000
Beryllium	2.5	50
Cadmium	2.5	50
Calcium	2500	50000
Chromium	10	200
Cobalt	25	500
Copper	12.5	250
Iron	50	1000
Lead	50	500
Magnesium	2500	50000
Manganese	25	500
Molybdenum	50	1000
Nickel	25	500
Potassium	2500	50000
Selenium	100	2000
Silver	2.5	50
Sodium	2500	50000
Thallium	100	2000
Vanadium	25	500
Zinc	25	500
Boron	50	1000
Tin	100	2000
Titanium	50	1000

* Levels shown indicate the spike concentration in the final digestate of the aqueous LCS or matrix spike based on the addition of 1.0 mL working spike (7.3) to 50 mL of sample.

TABLE IV. ICPMS Aqueous LCS and Matrix Spike Levels

Company Confidential & Proprietary

ELEMENT	Working LCS/MS Standard (mg/L)	Aqueous LCS/MS Level* (ug/L)
Aluminum	1000	10000
Antimony	10	100
Arsenic	10	100
Barium	10	100
Beryllium	10	100
Cadmium	10	100
Calcium	1000	10000
Chromium	10	100
Cobalt	10	100
Copper	10	100
Iron	1000	10000
Lead	10	100
Magnesium	1000	10000
Manganese	10	100
Molybdenum	10	100
Nickel	10	100
Potassium	1000	10000
Selenium	10	100
Silver	10	100
Sodium	1000	10000
Strontium	10	100
Thallium	10	100
Vanadium	10	100
Zinc	10	100
Boron	10	100
Tin	10	100
Titanium	10	100

* Levels shown indicate the spike concentration in the final digestate of the aqueous LCS or matrix spike based on the addition of 0.5 mL working spike (Section 7.4) to 50 mL of sample.

Company Confidential & Proprietary

TABLE V. TCLP Reporting Limits, Regulatory Limits and Matrix Spike Levels for ICP

ELEMENT	RL (ug/L)	Regulatory Limit (ug/L)	Spike Level (ug/L)*
Arsenic	500	5000	5000
Barium	10000	100000	50000
Cadmium	100	1000	1000
Chromium	500	5000	5000
Lead	500	5000	5000
Selenium	250	1000	1000
Silver	500	5000	1000

* Levels shown indicate the spike concentration in the final digestate of the aqueous LCS or matrix spike based on the addition of 0.5 mL working spike (Section 7.5) to 50 mL of sample.

Company Confidential & Proprietary

TABLE VI. Summary of Quality Control Requirements

QC PARAMETER	FREQUENCY	ACCEPTANCE CRITERIA	CORRECTIVE ACTION
Method Blank	One per sample preparation batch of up to 20 samples.	Refer to determinative SOPs: - NC-MT-0002 - NC-MT-012	Redigest and re-analyze samples associated with the method blank.
Laboratory Control Sample (LCS)	One per sample preparation batch of up to 20 samples.	Refer to determinative SOPs: - NC-MT-0002 - NC-MT-012	Redigest and re-analyze all samples associated with the LCS.
Matrix Spike	One per sample preparation batch of up to 20 samples.	Refer to determinative SOPs: - NC-MT-0002 - NC-MT-012	Reprep not required unless preparation error suspected.
Matrix Spike Duplicate	See Matrix Spike	Refer to determinative SOPs: - NC-MT-0002 - NC-MT-012	See Corrective Action for Matrix Spike.

Company Confidential & Proprietary

APPENDIX B. CONTAMINATION CONTROL GUIDELINES

The following procedures are strongly recommended to prevent contamination:

All glassware must be washed with detergent and tap water and rinsed with 1:1 nitric acid followed by deionized water.

Proper laboratory housekeeping is essential in the reduction of contamination in the metals laboratory. All work areas must be kept scrupulously clean.

Powdered or Latex Gloves must not be used in the metals laboratory since the powder contains zinc, as well as other metallic analytes. Only vinyl or nitrile gloves must be used in the metals laboratory.

Glassware must be periodically checked for cracks and etches and discarded if found. Etched glassware can cause cross contamination of any metallic analytes.

The following are helpful hints in the identification of the source of contaminants:

Reagents or standards can contain contaminants or be contaminated with the improper use of a pipette.

Improper cleaning of glassware can cause contamination.

Separate glassware if an unusually high sample is analyzed and soak with sulfuric acid prior to routine cleaning.

Company Confidential & Proprietary

Title: GC/MS ANALYSIS BASED ON METHOD 8270C

[Method 8270C]

Approvals (Signature/Date):

Technology Specialist	12/4/08 Date	Health & Safety Coordinator	12/12/08 Date
Quality Assurance Manager	12/15/08 Date	Technical Director	12/4/08 Date
Laboratory Director	12/8/08 Date		

This SOP was previously identified as SOP NC-MS-018, Rev 0, dated 05/28/08

Copyright Information:

This documentation has been prepared by TestAmerica Analytical Testing Corp. and its affiliates ("TestAmerica"), solely for their own use and the use of their customers in evaluating their qualifications and capabilities in connection with a particular project. The user of this document agrees by its acceptance to return it to TestAmerica upon request and not to reproduce, copy, lend, or otherwise disclose its contents, directly or indirectly, and not to use if for any other purpose other than that for which it was specifically provided. The user also agrees that where consultants or other outside parties are involved in the evaluation process, access to these documents shall not be given to said parties unless those parties also specifically agree to these conditions.

THIS DOCUMENT CONTAINS VALUABLE CONFIDENTIAL AND PROPRIETARY INFORMATION. DISCLOSURE, USE OR REPRODUCTION OF THESE MATERIALS WITHOUT THE WRITTEN AUTHORIZATION OF TESTAMERICA IS STRICTLY PROHIBITED. THIS UNPUBLISHED WORK BY TESTAMERICA IS PROTECTED BY STATE AND FEDERAL LAW OF THE UNITED STATES. IF PUBLICATION OF THIS WORK SHOULD OCCUR, THE FOLLOWING NOTICE SHALL APPLY: ©COPYRIGHT 2008 TESTAMERICA ANALYTICAL TESTING CORP. ALL RIGHTS RESERVED.

Facility Distribution No. _____ **Distributed To:**_____

TABLE OF CONTENTS

1. SCOPE AND APPLICATION 4
2 SUMMARY OF METHOD 4
3 DEFINITIONS 5
4 INTERFERENCES 5
5 SAFETY PRECAUTIONS 6
6 EQUIPMENT AND SUPPLIES 7
7 REAGENTS AND STANDARDS 8
8 SAMPLE PRESERVATION AND STORAGE 8
9 QUALITY CONTROL 8
10 CALIBRATION AND STANDARDIZATION 12
11 PROCEDURE 16
12 DATA ANALYSIS AND CALCULATIONS 18
13 METHOD PERFORMANCE 24
14 POLLUTION PREVENTION 25
15 WASTE MANAGEMENT 25
16 REFERENCES 25
17 MISCELLANEOUS 26

LIST OF TABLES

TABLE 1 TestAmerica North Canton Primary Standard and Standard Reporting Limits

TABLE 2 TestAmerica North Canton Appendix IX Standard and Standard Reporting Limits

TABLE 2A TestAmerica North Canton Michigan Program

TABLE 3 Reportable Analytes for TestAmerica North Canton Standard Tests, Primary Standard

TABLE 4 Reportable Analytes for TestAmerica North Canton Standard Tests, Appendix IX Standard

TABLE 5 Suggested Instrument Conditions

TABLE 6 DFTPP Key Ions and Ion Abundance Criteria

TABLE 7 Analytes in Approximate Retention Time Order and Characteristic Ions, Primary Standard

TABLE 8 Additional Appendix IX Analytes in Approximate Retention Time Order and Characteristic Ions

TABLE 9 8270C LCS Control Compounds

TABLE 9A 8270 All-Analyte Spike Mix

TABLE 10 TCLP LCS Compounds

TABLE 11 8270C Surrogate Compounds

TABLE 12 Calibration Ranges

TABLE 13 Calibration Ranges, Appendix IX

TABLE 14A, B Semivolatile Internal Standards with Corresponding Analytes Assigned for Quantitation

Company Confidential & Proprietary

1. SCOPE AND APPLICATION

1.1 This method is based upon SW846 8270C, and is applicable to the determination of the concentration of semivolatile organic compounds in extracts prepared from solid and aqueous matrices. Direct injection of a sample may be used in limited applications. Refer to Tables 1, 2, 3, and 4 for the list of compounds applicable for this method. Note that the compounds are listed in approximate retention time order. Additional compounds may be amenable to this method. If non-standard analytes are required, they must be validated by the procedures described in Section 13 before sample analysis.

1.2 The following compounds may require special treatment when being determined by this method:

- Benzidine can be subject to oxidative losses during solvent concentration and exhibits poor chromatography. Neutral extraction should be performed if this compound is expected.
- Hexachlorocyclopentadiene is subject to thermal decomposition in the inlet of the gas chromatograph, chemical reaction in acetone solution, and photochemical decomposition.
- N-Nitrosodiphenylamine decomposes in the gas chromatographic inlet and cannot be distinguished from diphenylamine.
- Pentachlorophenol, 2,4-dinitrophenol, 4-nitrophenol, 4,6-dinitro-2-methylphenol, 4-chloro-3-methylphenol, benzoic acid, 2-nitroaniline, 3-nitroaniline, 4-chloroaniline, and benzyl alcohol are subject to erratic chromatographic behavior, especially if the GC system is contaminated with high boiling material.
- Hexachlorophene is not amenable to analysis by this method.
- 3-Methylphenol cannot be separated from 4-methylphenol by the conditions specified in this method.

1.3 The standard reporting limit of this method for determining an individual compound is approximately 0.33 mg/kg (wet weight) for soil/sediment samples, 1 - 200 mg/kg for wastes (dependent on matrix and method of preparation), and 10 µg/L for groundwater samples. Some compounds have higher reporting limits. Refer to Tables 1, 2, and 2A for specific SRLs. Reporting limits will be proportionately higher for sample extracts that require dilution.

1.4 The associated LIMS code is QL (8270C).

2. SUMMARY OF METHOD

2.1 Aqueous samples are extracted with methylene chloride using a separatory funnel and/or a continuous extractor. Solid samples are extracted with methylene chloride / acetone using sonication, or soxhlet. The extract is dried, concentrated to a final volume of 2 mL for waters and soils, and analyzed by GC/MS. Extraction procedures are detailed in SOP NC-OP-032. Qualitative identification of the parameters in the extract is performed using the retention time

and the relative abundance of characteristic ions. Quantitative analysis is performed using the internal standard technique with a single characteristic ion.

3. DEFINITIONS

3.1 CCC (Calibration Check Compounds) - A subset of target compounds used to evaluate the calibration stability of the GC/MS system. A maximum percent deviation of the CCCs is specified for calibration acceptance.

3.2 SPCC (System Performance Check Compounds) - Target compounds designated to monitor chromatographic performance, sensitivity, and compound instability or degradation on active sites. Minimum response factors are specified for acceptable performance.

3.3 Batch - The batch is a set of up to 20 samples of the same matrix processed using the same procedures and reagents within the same time period. The Quality Control batch must contain a matrix spike / spike duplicate (MS/MSD), a Laboratory Control Sample (LCS), and a method blank. Batches are defined at the sample preparation stage. Batches must be kept together through the whole analytical process to the extent possible, but it is not mandatory to analyze prepared extracts on the same instrument or in the same sequence. Refer to the TestAmerica North Canton QC Program document (QA-003) for further details of the batch definition.

3.4 Method Blank - An analytical control consisting of all reagents, internal standards, and surrogate standards that is carried through the entire analytical procedure. The method blank is used to define the level of laboratory background and reagent contamination.

3.5 LCS (Laboratory Control Sample) - A blank spiked with the parameters of interest that is carried through the entire analytical procedure. Analysis of this sample with acceptable recoveries of the spiked materials demonstrates that the laboratory techniques for this method are acceptable.

3.6 MS (Matrix Spike) - Aliquot of a matrix (water or soil) fortified (spiked) with known quantities of specific compounds and subjected to the entire analytical procedure in order to indicate the appropriateness of the method for the matrix by measuring recovery.

3.7 MSD (Matrix Spike Duplicate) - A second aliquot of the same sample as the matrix spike (above) that is spiked in order to determine the precision of the method for the matrix by measuring relative percent difference.

4. INTERFERENCES

4.1 Method interferences may be caused by contaminants in solvents, reagents, glassware, and other processing apparatus that lead to discrete artifacts. All of these materials must be routinely demonstrated to be free from interferences under conditions of the analysis by running laboratory method blanks as described in the Quality Control section. Raw GC/MS data from all blanks, samples, and spikes must be evaluated for interferences. If an interference is detected, it is necessary to determine if the source of interference is in the preparation and/or cleanup of the samples; then take corrective action to eliminate the problem.

Company Confidential & Proprietary

4.2 The use of high purity reagents, solvents, and gases helps to minimize interference problems.

4.3 Matrix interferences may be caused by contaminants that are co-extracted from the sample. The extent of matrix interferences will vary considerably from source to source, depending upon the nature of the sample.

4.4 Contamination by carryover can occur whenever high-level and low-level samples are sequentially analyzed. To reduce carryover, the sample syringe must be rinsed with solvent between samples. Whenever an unusually concentrated sample is encountered, it must be followed by the analysis of solvent to check for cross contamination.

4.5 Phthalate contamination is commonly observed in this analysis and its occurrence must be carefully evaluated as an indicator of a contamination problem in the sample preparation step of the analysis.

5 SAFETY PRECAUTIONS

5.1 Employees must abide by the policies and procedures in the Corporate Environmental Health and Safety Manual and this document.

5.2 Eye protection that protects against splash, laboratory coat, and appropriate gloves must be worn while samples, standards, solvents and reagents are being handled. Disposable gloves that have become contaminated must be removed and discarded; other gloves must be cleaned immediately.

5.3 Chemicals that have been classified as carcinogens, or potential carcinogens, under OSHA include Benzo(a)anthracene, benzidine, 3,3'-dichlorobenzidine, benzo(a)pyrene, dibenzo(a,h)anthracene, and n-nitrosodimethylamine.

5.4 The following is a list of the materials used in this method, which have a serious or significant hazard rating. **NOTE: This list does not include all materials used in the method. The table contains a summary of the primary hazards listed in the MSDS for each of the materials listed in the table.** A complete list of materials used in the method can be found in the Reagents and Standards section. Employees must review the information in the MSDS for each material before using it for the first time or when there are major changes to the MSDS.

Material (1)	Hazards	Exposure Limit (2)	Signs and symptoms of exposure
Methylene Chloride	Carcinogen Irritant	25 ppm-TWA 125 ppm-STEL	Causes irritation to respiratory tract. Has a strong narcotic effect with symptoms of mental confusion, light-headedness, fatigue, nausea, vomiting and headache. Causes irritation, redness and pain to the skin and eyes. Prolonged contact can cause burns. Liquid degreases the skin. May be absorbed through skin.
1 – Always add acid to water to prevent violent reactions.			
2 – Exposure limit refers to the OSHA regulatory exposure limit.			

5.5 It is recommended that analysts break up work tasks to avoid repetitive motion tasks, such as opening a large number of vials or containers in one time period.

5.6 Exposure to chemicals must be maintained as low as reasonably achievable. All samples with stickers that read "Caution/Use Hood!" must be opened in the hood. Contact the EH&S Coordinator if this is not possible. Solvent and waste containers must be kept closed unless transfers are being made.

5.7 The preparation of standards and reagents must be conducted in a fume hood with the sash closed as far as the operation will permit.

5.8 It is recommended that neat standards be purchased only as a last resort. The preparation of standards from neat materials and reagents must be conducted in a fume hood with the sash closed as far as the operations will permit.

5.9 Standards in solution may be diluted in the open laboratory when syringes and the like are utilized.

5.10 All work must be stopped in the event of a known or potential compromise to the health and safety of a TestAmerica North Canton associate. The situation must be reported immediately to a Laboratory Supervisor and the EH&S Coordinator.

6. EQUIPMENT AND SUPPLIES

6.1 Gas Chromatograph/Mass Spectrometer System: An analytical system complete with a temperature-programmable gas chromatograph suitable for split/splitless injection and all required accessories, including syringes, analytical columns, and gases. The capillary column must be directly coupled to the source.

6.2 Column: 20m x 0.18mm ID, 0.36µm film thickness silicon-coated fused-silica capillary column (J & W Scientific DB-5.625 or equivalent). Alternate columns are acceptable if they provide acceptable performance.

6.3 Mass Spectrometer: Capable of scanning from 35 to 500 AMU every one second or less, using 70 volts (nominal) electron energy in the electron impact ionization mode. The mass spectrometer must be capable of producing a mass spectrum for decafluorotriphenylphosphine (DFTPP) which meets all of the criteria in Table 6 when the GC/MS tuning standard is injected through the GC.

6.4 GC/MS Interface: Any GC-to-MS interface that gives acceptable calibration points and achieves acceptable tuning performance criteria may be used.

6.5 Data System: A computer system must be interfaced to the mass spectrometer. The system must allow the continuous acquisition and storage on machine-readable media of all mass spectra obtained throughout the duration of the chromatographic program. The computer must have software that can search any GC/MS data file for ions of a specific mass and that can plot such ion abundances versus time or scan number. This type of plot is defined as the Extracted Ion Current Profile (EICP). Software must also be available that allows integrating the abundances in any EICP between specified time or scan-number limits. The most recent version of the

EPA/NIH Mass Spectral Library is recommended.

6.6 Syringe: 5 µL Hamilton Laboratory grade syringes or equivalent.

6.7 Carrier gas: Ultra high purity helium.

7. REAGENTS AND STANDARDS

7.1 A minimum five-point calibration curve is prepared. The standard preparation information is detailed in the Standard Logbook. If a quadratic regression is used, six points must be analyzed for the calibration curve. The low point must be at or below the reporting limit. Refer to Tables 12 and 13 for typical calibration levels for all analytes. Other calibration levels may be used, depending on instrument capability, but the low standard must support the reporting limit and the high standard defines the range of the calibration. For Ohio VAP work, the low standard must be at, or below, the reporting limit.

7.2 An Internal Standard solution is prepared by diluting a purchased standard. The standard preparation information is detailed in the Standard Logbook. Compounds in the I.S. Mix are acenaphthene-d10, chrysene-d12, 1,4-dichlorobenzene-d4, naphthalene-d8, perylene-d12, and phenanthrene-d10.

7.3 Surrogate Standard Spiking Solution: Prepare as indicated in the preparative methods. Preparation information is detailed in the Standard Logbook for the Organic Prep group. See appropriate preparation SOP. Surrogate compounds and levels are listed in Table 11.

7.4 GC/MS Tuning Standard: A methylene chloride solution containing decafluorotriphenylphosphine (DFTPP) is prepared. The standard preparation information is detailed in the Standard Logbook. Pentachlorophenol, benzidine, and DDT, must also be included in the Tuning Standard. All components are at 25 ug/mL.

7.5 The standards listed in Sections 7.1 to 7.4 must be refrigerated at $\leq 6^{o}$C when not in use. Refrigeration at -10°C to -20°C may be used if it can be demonstrated that analytes do not fall out of solution at this temperature. The standards must be replaced at least once a year. Additional information can be found in SOP NC-QA-017.

8. SAMPLE PRESERVATION AND STORAGE

8.1 Sample extracts are stored at 4 ± 2°C. Samples and extracts must be stored in suitable glass containers with Teflon-lined caps. (Extracts will be stored for 30 days after invoicing.)

8.3 Water samples are extracted within seven days of sampling, and the extracts are analyzed within 40 days of extraction. Solids, sludges, and organic liquids are extracted within 14 days of sampling and the extracts are analyzed within 40 days of extraction.

9. QUALITY CONTROL

9.1 Initial Demonstration of Capability

9.1.1 For the standard analyte list, the initial demonstration and method detection limit (MDL) studies described in Section 13 must be acceptable before analysis of samples may begin.

9.1.2 For non-standard analytes, an MDL study must be performed and calibration curve generated before analyzing any samples, unless lesser requirements are previously agreed to with the client. In any event, the minimum initial demonstration required is analysis of an extracted standard at the reporting limit and a single point calibration. For DoD projects, the initial demonstration must include an MDL study analysis of the LCS replicates and a minimum of five-point calibration.

9.2 Control Limits

9.2.1 In-house historical control limits must be determined for surrogates, matrix spikes, and laboratory control samples (LCS). These limits must be determined periodically. The recovery limits are mean recovery ± 3 standard deviations for surrogates, MS, and LCS. Precision limits for matrix spikes / matrix spike duplicates are mean relative percent difference ± 3 standard deviations. Control limits are established by the laboratory as described in SOP NC-QA-018. Control limits are easily accessible via LIMs (QC Browser program).

9.2.2 If samples are diluted, the surrogate and matrix spike recoveries must be reported with a DIL flag. Any analyte outside of the control limits must be flagged with JDIL. For DoD projects, all surrogates must be within control limits.

9.2.3 All surrogate, LCS, and MS recoveries (except for dilutions) must be entered into LIMS (when available) or other database so that accurate historical control limits can be generated.

9.2.4 Refer to the QC Program document (QA-003) for further details of control limits.

9.3 Method Blank

9.3.1 A method blank is prepared and analyzed with each batch of samples. The method blank consists of reagent water for aqueous samples and sodium sulfate for soil samples (refer to SOP NC-OP-032 for details). Surrogates are added and the method blank is carried through the entire analytical procedure. The method blank must not contain any analyte of interest at or above the reporting limit (except common lab contaminants, see below). Any blank contamination above the reporting limit must be less than 1/10 of the measured concentration of any sample in the associated preparation batch.

9.3.1.1 If the analyte is a common laboratory contaminant (phthalate esters), the data may be reported with qualifiers if the concentration of the analyte is less than five times the RL. Such action must be taken in consultation with the client.

9.3.1.2 Re-analysis of any samples with reportable concentrations of analytes found in the method blank is required unless other actions are agreed with the client.

9.3.1.3 If there is no target analyte greater than the RL in the samples associated with an unacceptable method blank, the data may be reported with qualifiers. Such action should be taken in consultation with the client. NOTE: For Ohio VAP work, there can be no target analyte greater than the RL in the method blank. All samples associated with an unacceptable blank must be re-extracted and re-analyzed.

9.3.2 The method blank must have acceptable surrogate recoveries. If surrogate recoveries are not acceptable, the data must be evaluated to determine if the method blank has served the purpose of demonstrating that the analysis is free of contamination. If surrogate recoveries are low and there are reportable analytes in the associated samples, re-extraction of the blank and affected samples will normally be required. Consultation with the client must take place. For Ohio VAP samples, all analytes must meet criteria or the samples must be re-extracted if sufficient volume of sample remains.

9.3.3 If re-analysis of the batch is not possible due to limited sample volume or other constraints, the method blank is reported, all associated samples are flagged with a "B", and appropriate comments must be made in a narrative to provide further documentation.

9.3.4 Refer to the TestAmerica North Canton QC Program document (QA-003) for further details of the corrective actions.

9.4 Laboratory Control Sample (LCS)

9.4.1 A laboratory control sample (LCS) is prepared and analyzed with every batch of samples. All control analytes must be within established control limits. The LCS is spiked with the compounds listed in Tables 9, 9A, and 10 unless specified by a client or agency.

9.4.2 If any control analyte in the LCS is outside the laboratory established historical control limits, corrective action must occur. All non-controlling compounds must attain a recovery of 5% or greater if the compound is on the client's list. Corrective action may include re-extraction and re-analysis of the batch. For Ohio VAP samples, all analytes must meet criteria or the samples must be re-extracted if sufficient volume of sample remains.

9.4.2.1 If the batch is not re-extracted and re-analyzed, the reasons for accepting the batch must be clearly presented in the project records and the report. (An example of acceptable reasons for not reanalyzing might be that the matrix spike and matrix spike duplicate are acceptable, and sample surrogate recoveries are good, demonstrating that the problem was confined to the LCS).

9.4.2.2 If re-extraction and re-analysis of the batch is not possible due to limited sample volume or other constraints, the LCS is reported, all associated samples are flagged, and appropriate comments are made in a narrative to provide further documentation.

9.4.2.3 The LCS must have acceptable surrogate recoveries. If surrogate recoveries are low, re-extraction of the LCS and affected samples will normally be required. Consultation with the client should take place. For Ohio VAP samples, all analytes

must meet criteria or the samples must be re-extracted if sufficient volume of sample remains.

9.4.3 Ongoing monitoring of the LCS over time provides evidence that the laboratory is performing the method within accepted QC guidelines for accuracy and precision.

9.5 Matrix Spike/Matrix Spike Duplicate (MS/MSD)

9.5.1 A matrix spike/matrix spike duplicate (MS/MSD) is prepared and analyzed with every batch of samples. The MS/MSD is spiked with the same subset of analytes as the LCS (See Tables 9 and 10). Compare the percent recovery and relative percent difference (RPD) to that in the laboratory specific historically-generated limits.

9.5.1.1 If the recovery for any component is outside QC limits for both the matrix spike / spike duplicate and the LCS, the laboratory is out of control and corrective action must be taken. Corrective action must include re-preparation and re-analysis of the batch.

9.5.1.2 If an MS/MSD is not possible due to limited sample, then an LCS duplicate must be analyzed. RPD of the LCS and LCSD are compared to in-house limits.

9.5.1.3 The matrix spike / duplicate must be analyzed at the same dilution as the unspiked sample, even if the matrix spike compounds will be diluted out.

9.6 Surrogates

9.6.1 Every sample, blank, and QC sample is spiked with surrogate standards. Surrogate spike recoveries must be evaluated by determining whether the concentration (measured as percent recovery) falls within the required recovery limits. The compounds routinely included in the surrogate spiking solution, along with recommended standard concentrations, are listed in Table 11.

9.6.2 If any surrogates are outside limits, the following corrective actions must take place (except for dilutions):

9.6.2.1 Check all calculations for error.

9.6.2.2 Ensure that instrument performance is acceptable.

9.6.2.3 Recalculate the data and/or re-analyze the extract if either of the above checks reveal a problem.

9.6.2.3.1 It is only necessary to reprepare / re-analyze a sample once to demonstrate that poor surrogate recovery is due to matrix effect, unless the analyst believes that the repeated out of control results are not due to matrix effect.

Note: If all associated QC meets criteria (blank, LCS/LCSD), up to one surrogate per fraction may be outside of acceptance criteria , as long as the recovery is greater than 10%. **Note:** For Ohio VAP and DoD samples, all surrogates must be within acceptance criteria.

9.6.3 If the sample with surrogate recoveries outside the recovery limits was a sample used for an MS/MSD and the surrogate recoveries in the MS/MSD are also outside of the control limits, then the sample, the MS, and the MSD do not require re-analysis as this phenomenon would indicate a possible matrix problem.

9.6.4 If the sample is re-analyzed and the surrogate recoveries in the re-analysis are acceptable, then the problem was within the analyst's control and only the re-analyzed data must be reported. (Unless the re-analysis was outside holding times, in which case, reporting both sets of results may be appropriate.)

9.6.5 If the re-analysis does confirm the original results, the original analysis is reported and the data flagged as estimated due to matrix effect.

9.7 Nonconformance and Corrective Action

9.7.1 Any deviations from QC procedures must be documented as a nonconformance with applicable cause and corrective action approved by the facility QA Manager.

10. CALIBRATION AND STANDARDIZATION

10.1 Summary

10.1.1 The instrument is tuned for DFTPP, calibrated initially with a minimum five-point calibration curve, and verified each 12-hour shift with one or more continuing calibration standard(s). Recommended instrument conditions are listed in Table 5.

10.1.2 For DoD work, refer to SOP NC-QA-016 for specific details.

10.2 All standards and extracts are allowed to warm to room temperature before injecting.

10.3 Instrument Tuning

10.3.1 At the beginning of every 12-hour shift when analyses are to be performed, the GC/MS system must be checked to see if acceptable performance criteria (Table 6) is achieved for DFTPP (decafluorotriphenylphosphine).

10.3.2 Inject the GC/MS tuning standard (Section 7.4) into the GC/MS system. Obtain a background-corrected mass spectra of DFTPP and confirm that all the key m/z criteria in Table 6 are achieved. If all the criteria are not achieved, the analyst must retune the mass spectrometer and repeat the test until all criteria are achieved. The performance

criteria must be achieved before any samples, blanks, or standards are analyzed.

10.3.3 The GC/MS tuning standard must also be used to evaluate the inertness of the chromatographic system. The tailing factor for benzidine must be less than 3.0. The tailing factor for pentachlorophenol must be less than 5. DDT must be included in the tuning standard, and its breakdown must be < 20%. Refer to Section 12 for the appropriate calculations.

10.4 Initial Calibration

10.4.1 Internal Standard Calibration Procedure: Internal standards are listed in Table 7. Use the base peak m/z as the primary m/z for quantitation of the standards. If interferences are noted, use one of the next two most intense masses for quantitation.

10.4.2 Compounds should be assigned to the IS with the closest retention time. Refer to Tables 14A and 14B for internal standard corresponding analytes.

10.4.3 Prepare calibration standards at a minimum of five concentration levels for each parameter of interest. Six standards must be used for a quadratic least squares calibration. It may also be useful to analyze six calibration levels and use the lower five for most analytes and the upper five for analytes that have poor response. Add the internal standard mixture to result in 2 ng on column. (For example, 5 uL of 80ppm IS mix is added to 100 uL of extract. This results in 4 ng; but only 0.5 uL is injected, resulting in a final on column amount of 2 ng.). The concentration ranges of all analytes are listed in Tables 12 and 13. For Ohio VAP work, the low standard must be at or below the reporting limit.

10.4.4 Analyze each calibration standard and tabulate the area of the primary characteristic m/z against concentration for each compound and internal standard. Tables 7 and 8 list the analytes and characteristic ions analyzed in the laboratory. Calculate response factors (RF), average response factors, and the percent RSD of the response factors for each compound using the equations in Section 12 and verify that the CCC and SPCC criteria in Sections 10.4.5 and 10.4.6 are met. **No sample analysis must be performed unless these criteria are met.**

10.4.5 System Performance Check Compounds (SPCCs): The minimum average RF for semivolatile SPCCs is 0.050. If the minimum response factors are not met, the system must be evaluated and corrective action must be taken before sample analysis begins. Some possible problems are standard mixture degradation, injection port inlet contamination, contamination at the front end of the analytical column, and active sites in the column or chromatographic system. This check must be met before analysis begins.

SPCC Compounds:

N-nitroso-di-n-propylamine
Hexachlorocyclopentadiene
2,4-Dinitrophenol
4-Nitrophenol

10.4.6 Calibration Check Compounds (CCCs): The %RSD of the response factors for each CCC in the initial calibration must be less than 30% for the initial calibration to be considered valid. This criterion must be met before sample analysis begins. Problems similar to those listed under SPCCs could affect this criterion.

10.4.6.1 If none of the CCCs are required analytes, project-specific calibration specifications must be agreed with the client.

10.4.6.2 CCC Compounds

Phenol
Acenaphthene
1,4-Dichlorobenzene
N-nitrosodiphenylamine
2-Nitrophenol
Pentachlorophenol
2,4-Dichlorophenol
Fluoranthene
Hexachlorobutadiene
Di-n-octylphthalate
4-Chloro-3-methylphenol
Benzo(a)pyrene
2,4,6-Trichlorophenol

10.4.7 If the software in use is capable of routinely reporting curve coefficients for data validation purposes, and the necessary calibration reports can be generated, then the analyst must evaluate analytes with %RSD > 15% for calibration on a curve. If it appears that substantially better accuracy would be obtained using quantitation from a curve, then the appropriate curve with no forced intercept must be used for quantitation.

10.4.7.1 If an analyte in the initial calibration is > 15%, then calibration on a curve must be used. Quadratic curve fits must be used if the compound has historically exhibited a nonlinear response. The analyst must consider instrument maintenance to improve the linearity of response. Use of 1/Concentration^2 weighting is recommended to improve the accuracy of quantitation at the low end of the curve. If Relative Standard Error (RSE) is used to evaluate the curve, it must be better than 15%. If the % RSD is >15%, the analyst may drop the low or high points in the ICAL, as long as a minimum of five points are maintained and the quantitation range is adjusted accordingly. If the % RSD is still >15%, a quadratic or linear curve must be used. The coefficient of determination (r^2) must be ≥ 0.990. If the coefficient of determination is < 0.990, then any hits for these compounds must be flagged as estimated. If a curve is not linear for any compound that is found in a sample, the result must be flagged as estimated. Linear is defined as <15% RSD or a coefficient of determination of 0.990.

Note: For Ohio VAP work, the low standard must be at or below the reporting limit.

10.4.7.2 **Note**: Several components do not respond well by this method (poor linearity). These compounds are indene, acrylamide, 4-Nitroquinoline-1-oxide, famphur, benzenethiol, kepone, and 2,4-toluenediamine. If these compounds are requested by a client and hits are found, alternate standards or methods will be needed for more accurate quantitation. Sensitivity as demonstrated by the low standard is sufficient to substantiate a non-detect.

10.4.8 If time remains in the 12-hour period initiated by the DFTPP injection before the initial calibration, samples must be analyzed. Otherwise, proceed to continuing calibration.

10.4.9 Quantitation is performed using the calibration curve or average response factor from the initial curve.

10.5 Initial Calibration Verification (ICV)

10.5.1 Calibration accuracy is verified by analyzing a second source standard (ICV) immediately after the initial calibration. The recovery CCC compounds must be $\leq$ 20%. The recovery for non-CCC compounds must be $\leq$ 50% with an allowance of up to six compounds >50%.

10.6 Continuing Calibration

10.6.1 At the start of each 12-hour period, analyze a GC/MS tuning standard. The injection of DFTPP must result in a mass spectrum for DFTPP which meets the criteria given in Table 6.

10.6.2 Following a successful DFTPP analysis the continuing calibration standard(s) are analyzed. The standards must contain all semivolatile analytes, including all required surrogates. A mid-level calibration standard is used for the continuing calibration.

10.6.3 The following criteria must be met for the continuing calibration to be acceptable:

- The SPCC compounds must have a response factor of $\geq$ 0.05.
- The percent difference or drift of the CCC compounds from the initial calibration must be $\leq$ 20% (see Section 12 for calculations). In addition, the percent difference or drift of all analytes must be $\leq$ 50%, with allowance for up to four compounds to be greater than 50%.
- The internal standard response must be within 50-200% of the response in the mid level of the initial calibration.
- The internal standard retention times must be within 30 seconds of the retention times in the mid-level of the initial calibration.

- **Note**: There is no internal standard criteria for samples. Criteria is only for continuing and initial calibrations.

- **Note**: Ohio VAP requires that any sample with internal standard outliers be re-analyzed undiluted unless a matrix effect is observed. If there is no matrix interference, the sample must be reanalyzed at the original dilution. If the internal standard is within criteria, report the second analysis. If the internal standard is still outside of criteria, the sample must be diluted until the internal standard meets criteria. Multiple runs may be required. The criteria for acceptance is between 50% and 200% of the same internal standard in continuing calibration.

10.6.3.1. If none of the CCCs are required analytes, project specific calibration specifications must be agreed with the client.

10.6.4. Once the above criteria have been met, sample analysis will begin. Initial calibration average RFs (or the calibration curve) will be used for sample quantitation, not the continuing calibration RFs. Analysis will proceed until 12 hours from the injection of the DFTPP have passed. (A sample *injected* less than 12 hours after the DFTPP is acceptable.)

11. PROCEDURE

11.1 Sample Preparation

11.1.1 Samples are prepared following SOP NC-OP-032.

11.1.2 For DoD work, refer to SOP NC-QA-016 for specific details.

11.2 Sample Analysis Procedure

11.2.1 Calibrate the instrument as described in Section 10. Depending on the target compounds required by the client, it may be necessary to use more than one calibration standard.

11.2.2 Analyze all samples using the same instrument conditions as the preceding continuing calibration standard.

11.2.3 Add internal standard to the extract to result in 2 ng injected on column. Mix thoroughly before injection into the instrument.

11.2.4 Inject the sample extract into the GC/MS system using the same injection technique as used for the standards.

11.2.5 The data system will determine the concentration of each analyte in the extract using calculations equivalent to those in Section 12. Quantitation is based on the initial calibration, not the continuing calibration.

Company Confidential & Proprietary

11.2.6 Identified compounds are reviewed for proper integration. Manual integrations are performed if necessary and are documented by the analyst or automatically by the data system. Chromatograms before and after manual integration are required by many programs. Additional information on manual integration can be found in SOP CA-Q-S-002.

11.2.7 Target compounds identified by the data system are evaluated using the criteria listed in Section 12.1.

11.2.8 Library searches of peaks present in the chromatogram that are not target compounds (Tentatively Identified Compounds, TIC) must be performed if required by the client. They are evaluated using the criteria in Section 12.3.

11.3 Dilutions

11.3.1 If the response for any compound exceeds the working range of the GC/MS system, a dilution of the extract is prepared and analyzed. An appropriate dilution must be in the upper half of the calibration range. Samples must be screened to determine the appropriate dilution for the initial run. If the initial diluted run has no hits or hits below 20% of the calibration range and the matrix allows for analysis at a lesser dilution, the sample must be re-analyzed at a dilution targeted to bring the largest hit above 50% of the calibration range.

11.3.1 Guidance for Dilutions Due to Matrix

11.3.1.1 If the sample is initially run at a dilution and the baseline rise is less than the height of the internal standards, or if individual non-target peaks are less than two times the height of the internal standards, the sample should be re-analyzed at a more concentrated dilution. This requirement is approximate and subject to analyst judgement. For example, samples containing organic acids must be analyzed at a higher dilution to avoid destroying the column.

11.3.2 Reporting Dilutions

11.3.2.1 The most concentrated dilution with target compounds within the calibration range will be reported. Other dilutions will only be reported at client request.

11.4 Perform all qualitative and quantitative measurements. When the extracts are not being used for analyses, refrigerate them at 4 $\pm 2^{o}$C protected from light in screw cap vials equipped with unpierced Teflon®-lined septa.

11.5 Retention time criteria for samples

11.5.1 If the retention time for any internal standard changes by more than 0.5 minutes from the last continuing calibration standard, the chromatographic system must be inspected for malfunctions and corrected. Re-analysis of samples analyzed while the system was

malfunctioning is required.

11.5.2 If the retention time of any internal standard in any sample varies by more than 0.1 minute from the preceding continuing calibration standard, the data must be carefully evaluated to ensure no analytes have shifted outside their retention time windows.

11.6 Procedural Variations

11.6.1 One-time procedural variations are allowed only if deemed necessary in the professional judgment of supervision to accommodate variation in sample matrix, chemistry, sample size, or other parameters. Any variation in procedure must be completely documented using a Nonconformance Memo and approved by a Technical Specialist and QA Manager. The Nonconformance Memo must be filed in the project file. Any unauthorized deviations from this procedure must also be documented as a non-conformance with a cause and corrective action described.

11.7 Troubleshooting Guide

11.7.1 Daily Instrument Maintenance

11.7.1.1 In addition to the checks listed in the instrument maintenance schedule in the TestAmerica North Canton Quality Assurance Manual (QAM), current version, the following daily maintenance must be performed.

11.7.1.1.1 Clip column as necessary.

11.7.1.1.2 Install new or cleaned injection port liner as necessary.

11.7.1.1.3 Install new septum as necessary.

11.7.1.1.4 Perform autotune.

11.7.2 Major Maintenance

11.7.2.1 A new initial calibration is necessary following major maintenance. Major maintenance includes changing the column, cleaning the source, and replacing the multiplier. Refer to the manufacturer's manual for specific guidance.

12 DATA ANALYSIS AND CALCULATIONS

12.1 Qualitative identification

12.1.1 An analyte is identified by retention time and by comparison of the sample mass spectrum with the mass spectrum of a standard of the suspected compound (standard reference spectrum). Mass spectra for standard reference may be obtained on the user's GC/MS by analysis of the calibration standards or from the NBS library. Two criteria must be satisfied to verify identification: (1) elution of sample component at the same GC retention time as the standard component; and (2) correspondence of the

sample component and the standard component characteristic ions. (Note: Care must be taken to ensure that spectral distortion due to co-elution is evaluated.)

12.1.1.1 The sample component retention time must compare to within ± 0.2 min. of the retention time of the standard component. For reference, the standard must be run within the same 12 hours as the sample.

12.1.1.2 All ions present in the standard mass spectra at a relative intensity greater than 10% (most abundant ion in the spectrum equals 100%) must be present in the sample spectrum.

12.1.1.3 The characteristic ions of a compound must maximize in the same scan or within one scan of each other.

12.1.1.4 The relative intensities of ions must agree to within ±30% between the standard and sample spectra. (Example: For an ion with an abundance of 50% in the standard spectra, the corresponding sample abundance must be between 20% and 80%.)

12.1.2 If a compound cannot be verified by all the above criteria, but in the technical judgment of the analyst the identification is correct, the analyst must report that identification and proceed with quantitation.

12.2 Mass chromatogram searches

12.2.1 Certain compounds are unstable in the calibration standard and cannot be calibrated in the normal way. In particular, the compound hexachlorophene (CAS 70-30-4) falls into this category, and is required for Appendix IX analysis. For this analyte, a mass chromatogram search is made.

12.2.1.1 Hexachlorophene

12.2.1.1.1 Display the mass chromatograms for mass 196 and mass 198 for the region of the chromatogram from at least 2 minutes before chrysene-d12 to at least 4 minutes after chrysene-d12. If peaks for both ions coincide, then the analyst evaluates the spectrum for the presence of hexachlorophene. No quantitation is possible.

12.3 For samples containing components not associated with the calibration standards, a library search may be made for the purpose of tentative identification. The necessity to perform this type of identification must be determined by the type of analyses being conducted or by client request. Computer-generated library search routines must not use normalization routines that would misrepresent the library or unknown spectra when compared to each other. Only after visual comparison of sample spectra with the nearest library searches will the mass spectral interpretation specialist assign a tentative identification. Guidelines for making tentative identification are:

12.3.1 Relative intensities of major ions in the reference spectrum (ions >10% of the most

abundant ion) must be present in the sample spectrum.

12.3.2 The relative intensities of the major ions must agree within ±20%. (Example: For an ion with an abundance of 50% in the standard spectrum, the corresponding sample ion abundance must be between 30%and 70%.)

12.3.3 Molecular ions present in the reference spectrum must be present in the sample spectrum.

12.3.4 Ions present in the sample spectrum, but not in the reference spectrum, must be reviewed for possible background contamination or presence of co-eluting compounds.

12.3.5 Ions present in the reference spectrum, but not in the sample spectrum, should be reviewed for possible subtraction from the sample spectrum because of background contamination or co-eluting peaks. Data system library reduction programs can sometimes create these discrepancies.

12.3.6 Automatic background subtraction can severely distort spectra from samples with unresolved hydrocarbons.

12.3.7 Note: For water samples, the TIC searches begin with compounds eluting after the first surrogate (2-Fluorophenol). For solid samples, the TIC searches begin with compounds eluting after the Aldol Condensation Product. Any compounds eluting before these analytes are considered volatile analytes are reported in the volatile analysis. A possible exception to this general rule would be if an early eluting compound were the reason for a sample dilution.

12.3.8 If a client requests 10 TICs, the laboratory supplies a minimum of 10. For a request of 20 TICS, the laboratory would supply a minimum of 20--assuming that number of compounds were available.

12.4 Anyone evaluating data is trained to know how to handle isomers with identical mass spectra and close elution times. These include:

Dichlorobenzenes
Methylphenols
Trichlorophenols
Phenanthrene, anthracene
Fluoranthene, pyrene
Benzo(b) and (k)fluoranthene
Chrysene, benzo(a)anthracene

Extra precautions concerning these compounds are to more closely scrutinize retention time vs. the calibration standard and also to check that all isomers have distinct retention times.

A second category of problem compounds would be the poor responders or compounds that chromatograph poorly. Included in this category would be:

Benzoic acid
Chloroanilines
Nitroanilines
2,4-Dinitrophenol
4-Nitrophenol
Pentachlorophenol
3,3'-Dichlorobenzidine
Benzyl alcohol
4,6-Dinitro-2-methylphenol

Manually checking the integrations would be appropriate for these compounds.

12.5 Calculations

12.5.1 Percent Relative Standard Deviation for Initial Calibration

$$\%RSD = \frac{SD}{\overline{RF}} \times 100$$

$RF =$ Mean of RFs from intial caibration for a compound

$SD =$ Standard deviation of RFs from initial calibration for a compound,

$$= \sqrt{\sum_{i=1}^{N} \frac{\left(RFi - \overline{RF}\right)^2}{N-1}}$$

$RFi =$ RF for each of the calibration levels

$N =$ Number of RF values

12.5.2 Continuing calibration percent drift

$$\%Drift = \frac{C_{actual} - C_{found}}{C_{actual}} \times 100\%$$

$C_{actual} =$ Known concentration in standard

$C_{found} =$ Measured concentration using selected quantitation method

12.5.3 Concentration in the extract

The concentration of each identified analyte and surrogate in the extract is calculated from the linear or quadratic curve fitted to the initial calibration points, or from the average RF of the initial calibration.

12.5.3.1 Average response factor

If the average of all the %RSDs of the response factors in the initial calibration is ≤ 15%, the average response factor from the initial calibration may be used for quantitation.

$$C_{ex} = \frac{R_x C_{is}}{R_{is} \overline{RF}}$$

12.5.3.2 Linear fit

$$C_{ex} = A + B\frac{(R_x C_{is})}{R_{is}}$$

Where: C_{ex} = Concentration in extract, µg/mL
R_x = Response for analyte
C_{is} = Concentration of internal standard
A = Intercept
B = Slope

12.5.3.3 Quadratic fit

$$C_{ex} = A + B\left(\frac{R_x C_{is}}{R_{is}}\right) + C\left(\frac{R_x C_{is}}{R_{is}}^{2}\right)$$

Where: C = Curvature

12.5.4 The concentration in the sample is then calculated.

12.5.4.1 Aqueous Calculation

$$\text{Concentration, } mg/L = \frac{C_{ex} V_t}{V_o}$$

Where: V_t = Volume of total extract, µL, taking into account dilutions (i.e., a 1-to-10 dilution of a 1 Ml extract will mean V_t = 10,000 µL. If half the base/neutral extract and half the acid extract are combined, V_t = 2,000.)

V_o = Volume of water extracted (mL)

12.5.5 Sediment/Soil, Sludge (on a dry-weight basis) and Waste (normally on a wet-weight basis

$$\text{Concentration, } mg/kg = \frac{C_{ex}V_t}{W_s D}$$

Where: W_s = Weight of sample extracted or diluted in grams
D = (100 - % moisture in sample)/100, for a dry weight basis or one for a wet weight basis

12.6 MS/MSD percent recovery calculation.

$$\text{Matrix Spike Recovery} = \frac{S_{SR} - S_R}{S_A} \times 100\%$$

Where: S_{SR} = Spike sample result
S_R = Sample result
S_A = Concentration equivalent of spike added

12.7 Relative % Difference calculation for the MS/MSD

$$RPD = \frac{MS_R - MSD_R}{1/2(MS_R + MSD_R)} \times 100$$

Where: RPD = Relative percent difference
MS_R = Matrix spike result
MSD_R = Matrix spike duplicate result

12.8 Relative response factor calculation

$$RF = \frac{A_x C_{is}}{A_{is} C_x}$$

Where: A_x = Area of the characteristic ion for the compound being measured
A_{is} = Area of the characteristic ion for the specific internal standard
C_x = Concentration of the compound being measured (µg/L)
C_{is} = Concentration of the specific internal standard (µg/L)

12.9 Calculation of TICs: The calculation of TICs (tentatively identified compounds) is identical to the above calculations with the following exceptions:

A_x = Area of the total ion chromatogram for the compound being measured

A_{is} = Area of the total ion chromatogram for the nearest internal standard without interference

RF = 1

12.10 Percent DDT breakdown

$$\% \text{ DDT breakdown} = \frac{\text{DDEarea} + \text{DDDarea}}{\text{DDTarea} + \text{DDEarea} + \text{DDarea}}$$

The total ion current areas are used for this calculation

12.11 Additional equations and calculations are listed in the following SOPs: Calibration Curves (General), CA-Q-S-005, and Selection of Calibration Points, CA-T-P-002

13. METHOD PERFORMANCE

13.1 Method Detection Limit

13.1.1 Each laboratory must generate a valid method detection limit for each analyte of interest. The MDL must be below the reporting limit for each analyte. The procedure for determination of the method detection limit is given in 40 CFR Part 136, Appendix B, and further defined in Policy CA-Q-S-006 and SOP NC-QA-021.

13.2 Initial Demonstration

13.2.1 Each laboratory must make an initial demonstration of capability for each individual method. Demonstration of capability for both soil and water matrices is required. This requires analysis of Laboratory Control Samples (LCS) containing all of the standard analytes for the method. For some tests, it may be necessary to use more than one QC check mix to cover all analytes of interest.

13.2.1.1 Four aliquots of the LCS are analyzed using the same procedures used to analyze samples, including sample preparation.

13.2.1.2 Calculate the average recovery and standard deviation of the recovery for each analyte of interest.

13.2.1.3 If any analyte does not meet the LCS acceptance criteria the test must be repeated. Only those analytes that did not meet criteria in the first test need to be evaluated. Repeated failure for any analyte indicates the need for the

laboratory to evaluate the analytical procedure and take corrective action.

13.3 Training Qualification

13.3.1 The Group/Team Leader has the responsibility to ensure this procedure is performed by an analyst who has been properly trained in its use and has the required experience.

13.3.2 Method validation information (where applicable) in the form of laboratory demonstrations of capabilities is maintained for this method in the laboratory QA files.

14. POLLUTION PREVENTION

14.1 This section is not applicable to this procedure.

15. WASTE MANAGEMENT

15.1 All waste will be disposed of in accordance with Federal, State and Local regulations. Where reasonably feasible, technological changes have been implemented to minimize the potential for pollution of the environment. Employees will abide by this method and the policies in Section 13 of the Corporate Environmental Health and Safety Manual (CW-E-M-001) for "Waste Management and Pollution Prevention."

15.2 Laboratory personnel assigned to perform hazardous waste disposal procedures must have a working knowledge of the established procedures and practices of TestAmerica. They must have training on the hazardous waste disposal practices upon initial assignment to these tasks, followed by an annual refresher training.

15.3 Waste Streams Produced by the Method

15.3.1 Vials containing sample extracts. These vials are placed in the vial waste located in the GC/MS laboratory.

16. REFERENCES

16.1 References

16.1.1 SW846, Test Methods for Evaluating Solid Waste, Third Edition, Update III October 1994, Semivolatile Organic Compounds by Gas Chromatography/Mass Spectrometry (GC/MS): Capillary Column Technique, Method 8270C

16.1.2 J. W. Eichelberger, L. E. Harris, and W. L. Budde, "Reference Compound to Calibrate Ion Abundance Measurement in Gas Chromatography/Mass Spectrometry," Analytical Chemistry, 47, 995 (1975)

16.1.3 TestAmerica North Canton Quality Assurance Manual (QAM), current version

16.1.4 TestAmerica Corporate Environmental Health and Safety Manual, CW-E-M-001, and TestAmerica North Canton Facility Addendum and Contingency Plan, current version

16.1.5 Revision History

Historical File:		Revision 2.1: 01/25/99		Revision 2.9: 06/18/03
(formerly CORP-MS-0001NC)		Revision 2.2: 03/27/00		Revision 2.10: 02/24/04
		Revision 2.3: 02/15/01		Revision 2.11: 02/03/06
		Revision 2.4: 05/29/01		Revision 2.12: 03/01/07
		Revision 2.5: 04/25/02		Revision 0: 05/28/08 (NC-MS-018)
		Revision 2.6: 08/15/02		
		Revision 2.7: 11/12/02		
		Revision 2.8: 01/23/03		

16.2 Associated SOPs and policies, latest version

16.2.1 QA Policy, QA-003

16.2.2 Statistical Evaluation of Data and Development of Control Charts, NC-QA-018

16.2.3 Method Detection Limits and Instrument Detection Limits, NC-QA-021 and CA-Q-S-006

16.2.4 Supplemental Practices for DoD Project Work, NC-QA-016

16.2.5 Standard and Reagents, NC-QA-017

16.2.6 Acceptable Manual Integration Practices, CA-Q-S-002

16.2.7 Calibration Curves (General), CA-Q-S-005

16.2.8 Section of Calibration Points, CA-T-P-002

17. MISCELLANEOUS

17.1 Modifications from Reference Method

17.1.1 A retention time window of 0.2 minutes is used for all components, since some data systems do not have the capability of using the relative retention time units specified in the reference method.

17.1.2 The quantitation and qualifier ions from compounds have been changed from those recommended in SW-846 in order to improve the reliability of qualitative identification.

17.2 Tables

Table 1 - TestAmerica North Canton Primary Standard and Standard Reporting Limits

Analytes	CAS Number	Water µg/L	Soil µg/kg	Low Level Water, µg/L	Low Level Soil, µg/kg	TCLP mg/L
1,1-Biphenyl	92-52-4	10	330	1	50	
1,2,4-Trichlorobenzene	120-82-1	10	330	1	50	
1,2-Dichlorobenzene	95-50-1	10	330	1	50	
1,3-Dichlorobenzene	541-73-1	10	330	1	50	
1,4-Dichlorobenzene	106-46-7	10	330	1	50	0.004
1-Methyl Naphthalene	90-12-0	10	330	0.2	6.67	
2,2'-oxybis(1-chloropropane)[1]	108-60-1	10	330	2	100	
2,4,5-Trichlorophenol	95-95-4	10	330	1	150	0.02
2,4,6-Trichlorophenol	88-06-2	10	330	1	150	0.02
2,4-Dichlorophenol	120-83-2	10	330	2	150	
2,4-Dimethylphenol	105-67-9	10	330	2	150	
2,4-Dinitrophenol	51-28-5	50	1600	5	330	
2,4-Dinitrotoluene	121-14-2	10	330	5	200	0.02
2,6-Dinitrotoluene	606-20-2	10	330	5	200	
2-Chloronaphthalene	91-58-7	10	330	1	50	
2-Chlorophenol	95-57-8	10	330	1	50	
2-Methylnaphthalene	91-57-6	10	330	0.2	6.67	
2-Methylphenol	95-48-7	10	330	1	200	
2-Nitroaniline	88-74-4	50	1600	2	200	
2-Nitrophenol	88-75-5	10	330	2	50	
3,3'-Dichlorobenzidine	91-94-1	50	1600	5	100	
3-Nitroaniline	99-09-2	50	1600	2	200	
4,6-Dinitro-2-methylphenol	534-52-1	50	1600	5	150	
4-Bromophenyl phenyl ether	101-55-3	10	330	2	50	
4-Chloro-3-methylphenol	59-50-7	10	330	2	150	
4-Chloroaniline	106-47-8	10	330	2	150	
4-Chlorophenyl phenyl ether	7005-72-3	10	330	2	50	
4-Methylphenol	106-44-5	10	330	1	200	
4-Nitroaniline	100-01-6	50	1600	2	200	
4-Nitrophenol	100-02-7	50	1600	5	330	
Acenaphthene	83-32-9	10	330	0.2	6.67	
Acenaphthylene	208-96-8	10	330	0.2	6.67	
Aniline	62-53-3	10	330	1	330	
Anthracene	120-12-7	10	330	0.2	6.67	
Atrazine	1912-24-9	10	330	1	200	
Azobenzene	103-33-3	10	330	10	330	
Benzaldehyde	100-52-7	10	330	1	100	
Benzenethiol	108-98-5	10	330	10	330	
Benzidine	92-87-5	100	3300	5	330	
Benzo(a)anthracene	56-55-3	10	330	0.2	6.67	
Benzo(a)pyrene	50-32-8	10	330	0.2	6.67	
Benzo(b)fluoranthene	205-99-2	10	330	0.2	6.67	
Benzo(g,h,i)perylene	191-24-2	10	330	0.2	6.67	
Benzo(k)fluoranthene	207-08-9	10	330	0.2	6.67	
Benzoic acid	65-85-0	50	1600	10	660	

Company Confidential & Proprietary

Table 1 (Cont'd)

Analytes	CAS Number	Water µg/L	Soil µg/kg	Low Level Water, µg/L	Low Level Soil, µg/kg	TCLP mg/L
Benzyl alcohol	100-51-6	10	330	5	330	
Bis(2-chloroethoxy)methane	111-91-1	10	330	1	100	
Bis(2-chloroethyl)ether	111-44-4	10	330	1	100	
Bis(2-ethylhexyl)phthalate	117-81-7	10	330	1	50	
Butyl benzyl phthalate	85-68-7	10	330	1	50	
Caprolactam	105-60-2	10	330	5	330	
Carbazole	86-74-8	10	330	1	50	
Chrysene	218-01-9	10	330	0.2	6.67	
Dibenz(a,h)anthracene	53-70-3	10	330	0.2	6.67	
Dibenzofuran	132-64-9	10	330	1	50	
Diethylphthalate	84-66-2	10	330	1	50	
Dimethyl phthalate	131-11-3	10	330	1	50	
Di-n-butyl phthalate	84-74-2	10	330	1	50	
Di-n-octylphthalate	117-84-0	10	330	1	50	
Fluoranthene	206-44-0	10	330	0.2	6.67	
Fluorene	86-73-7	10	330	0.2	6.67	
Hexachlorobenzene	118-74-1	10	330	0.2	6.67	0.02
Hexachlorobutadiene	87-68-3	10	330	1	50	0.02
Hexachlorocyclopentadiene	77-47-4	50	1600	10	330	0.02
Hexachloroethane	67-72-1	10	330	1	50	
Indene	95-13-6	10	330	5	330	
Indeno(1,2,3-cd)pyrene	193-39-5	10	330	0.2	6.67	
Isophorone	78-59-1	10	330	1	50	
Naphthalene	91-20-3	10	330	0.2	6.67	
Nitrobenzene	98-95-3	10	330	1	100	0.004
N-nitrosodimethylamine	62-75-9	10	330	1	100	
N-Nitroso-di-n-propylamine	621-64-7	10	330	1	50	
N-Nitrosodiphenylamine	86-30-6	10	330	1	50	
Pentachlorophenol	87-86-5	50	1600	5	150	0.04
Phenanthrene	85-01-8	10	330	0.2	6.67	
Phenol	108-95-2	10	330	1	50	
Pyrene	129-00-0	10	330	0.2	6.67	
Pyridine	110-86-1	20	660	1	100	0.02
Quinoline	91-22-5	10	330	5	330	
m-Cresol & p Cresol						0.04
o-Cresol						0.004

[1] 2,2'oxybis(1-chloropropane) was formerly known as bis(2-chloroisopropyl)ether.

Table 2 - TestAmerica North Canton Appendix IX[1] Standard Reporting Limits

Analytes	CAS No.	Water µg/L	Soil µg/kg	Low Level Water, µg/L	Low Level Soil, µg/kg
1,2,4,5-Tetrachlorobenzene	95-94-3	10	330	1	100
1,3,5-Trinitrobenzene	99-35-4	50	1600	5	1600
1,3-Dinitrobenzene	99-65-0	10	330	2	330
1,4-Dinitrobenzene	100-25-4	10	330	2	100
1,4-Naphthoquinone	130-15-4	50	1600	50	330
1-Naphthylamine	134-32-7	10	330	2	330
2,3,4,6-Tetrachlorophenol	58-90-2	50	1600	10	100
2,6-Dichlorophenol	87-65-0	10	330	5	150
2-Acetylaminofluorene	53-96-3	100	3300	10	330
2-Naphthylamine	91-59-8	10	330	2	200
2-Picoline	109-06-8	20	660	5	330
2-secbutyl-4,6-dinitrophenol (Dinoseb2)	88-85-7	20	660	2	330
3,3'-Dimethylbenzidine	119-93-7	50	1600	5	330
3-Methylcholanthrene	56-49-5	20	660	5	200
3-Methylphenol	108-39-4	10	330	1	200
4-Aminobiphenyl	92-67-1	50	1600	5	330
4-Nitroquinoline-1-oxide	56-57-5	100	3300	5	330
5-Nitro-o-toluidine	99-55-8	20	660	2	330
7,12-Dimethylbenz(a)anthracene	57-97-6	20	660	2	330
a,a-Dimethyl-phenethylamine	122-09-8	50	1600	5	660
Acetophenone	98-86-2	10	330	1	100
Aramite	140-57-8	20	660	5	330
Diallate[2]	2303-16-4	20	660	10	330
Dibenz(a,j)acridine	224-42-0	20	660	5	330
Dimethoate	60-51-5	20	660	2	330
Disulfoton	298-04-4	50	1600	2	330
Ethyl methanesulfonate	62-50-0	10	330	2	330
Famphur	52-85-7	100	3300	10	3300
Hexachloropropene	1888-71-7	100	3300	5	0.02
Isosafrole	120-58-1	20	660	5	330
Methapyrilene	91-80-5	50	1600	2	330
Methyl methanesulfonate	66-27-3	10	330	2	330
N-Nitrosodiethylamine	55-18-5	10	330	2	100
n-Nitrosodi-n-butylamine	924-16-3	10	330	2	100
N-Nitrosomethylethylamine	10595-95-6	10	330	2	100
N-Nitrosomorpholine	59-89-2	10	330	2	330
N-Nitrosopiperidine	100-75-4	10	330	2	330
N-Nitrosopyrrolidine	930-55-2	10	330	2	50
o,o,o-Triethyl-Phosphorothioate	126-68-1	50	1600	2	330
o-Toluidine	95-53-4	20	660	2	330
p-(Dimethylamino)azobenzene	60-11-7	20	660	2	330
p-Chlorobenzilate	510-15-6	10	330	2	330
Pentachlorobenzene	608-93-5	10	330	2	100

Company Confidential & Proprietary

Table 2 (Cont'd)

Analytes	CAS No.	Water µg/L	Soil µg/kg	Low Level Water, µg/L	Low Level Soil, µg/kg
Pentachloroethane	76-01-7	50	1600	20	330
Pentachloronitrobenzene	82-68-8	50	1600	2	330
Phenacetin	62-44-2	20	660	2	330
Phorate	298-02-2	50	1600	2	330
p-Phenylenediamine	106-50-3	100	3300	40	660
Pronamide	23950-58-5	20	660	2	330
Safrole	94-59-7	20	660	2	330
Sulfotepp	3689-24-5	50	1600	5	330
Thionazin	297-97-2	50	1600	2	330
1,2,4,5-Tetrachlorobenzene	95-94-3	10	330	1	100
1,3,5-Trinitrobenzene	99-35-4	50	1600	5	1600
1,3-Dinitrobenzene	99-65-0	10	330	2	330
1,4-Dinitrobenzene	100-25-4	10	330	2	100

[1] The Appendix IX standard contains additional analytes required for the Appendix IX list. The TestAmerica North Canton primary standard must also be analyzed to include all of the Appendix IX list

Table 2A – TestAmerica North Canton Michigan Program[1]

Semivolatile	CAS Number	Michigan Reporting Limits	
		Aqueous mg/L	Low Soil/Sediment mg/kg
Acenaphthene	83-32-9	5	330
Acenaphthylene	208-96-8	5	330
Acetophenone	98-86-2	5	330
Anthracene	120-12-7	5	330
Atrzine	1912-24-9	5	330
Benzaldehyde	100-52-7	10	330
Benzo(a)anthracene	56-55-3	1	330
Benzo(a)pyrene	50-32-8	2	330
Benzo(b)fluoranthene	205-99-2	2	330
Benzo(g,h,i)perylene	191-24-2	5	330
Benzo(k)fluoranthene	207-08-9	5	330
1,1'-Biphenyl	92-52-4	10	330
4-Bromophenylphenyl ehter	101-55-3	5	330
Butylbenzylphthalate	85-68-7	5	330
di-n-Butylphthalate	84-74-2	5	330
Caprolactam	105-60-2	10	330
Carbazole	86-74-8	10	330
4-Chloroaniline	106-47-8	20	1700
bis(2-Chloroethoxy)methane	111-91-1	5	330

Table 2A (Cont'd)

Semivolatile	CAS Number	Michigan Reporting Limits	
		Aqueous mg/L	Low Soil/Sediment mg/kg
bis(2-Chloroethyl)ether	111-44-4	4	330
bis(2-Chloroisopropyl)ether	108-60-1	5	330
4-Chloro-3-Methylphenol	59-50-7	5	330
2-Chloronaphthalene	91-58-7	5	330
2-Chlorophenol	95-57-8	5	330
4-Chlorophenyl phenyl ether	7005-72-3	5	330
Chrysene	218-01-9	5	330
Dibenz(a,h)anthracene	53-70-3	2	330
Dibenzofuran	132-64-9	5	330
3,3'-Dichlorobenzidine	91-94-1	4	2000
2,4-Dichlorophenol	120-83-2	10	330
Diethylphthalate	84-66-2	5	330
2-4-Dimethylphenol	105-67-9	5	330
Dimethylphthalate	131-11-3	5	330
4,6-Dinitro-2-methylphenol	534-52-1	20	1700
2,4-Dinitrophenol	51-28-5	20	1700
2,4-Dinitrotoluene	121-14-2	5	330
2,6-Dinitrotoluene	606-20-2	5	330
bis(2-Ethylhexyl)phthalate	117-81-7	5	330
Fluoranthene	206-44-0	5	330
Fluorene	86-73-7	5	330
Hexachlorobenzene	118-74-1	5	330
Hexachlorobutadiene	87-68-3	5	330
Hexachlorocyclopentadiene	77-47-4	5	330
Hexachloroethane	67-72-1	5	330
Indeno(1,2,3-cd)pyrene	193-39-5	2	330
Isophorone	78-59-1	5	330
2-Methylnapthalene	91-57-6	5	330
2-Methylphenol	95-48-7	5	330
4-Methylphenol	106-44-5	5	330
Naphthalene	91-20-3	5	330
2-Nitroaniline	88-74-4	20	1700
3-Nitroaniline	99-09-2	20	1700
4-Nitroaniline	100-01-6	20	1700
Nitrobenzene	95-95-3	4	330
2-Nitrophenol	88-75-5	5	330
4-Nitrophenol	100-02-7	20	1700
N-Nitroso-di-n-propylamine	621-64-7	5	330
N-Nitrosodiphenylamine (diphenylamine)	62-75-9	5	330
di-n-Octylphthalate	117-84-0	5	330
Pentachlorophenol	87-86-5	20	800
Phenanthrene	85-01-8	5	330
Phenol	108-95-2	5	330

Table 2A (Cont'd)

Semivolatile	CAS Number	Michigan Reporting Limits	
		Aqueous mg/L	Low Soil/Sediment mg/kg
Pyrene	129-00-0	5	330
2,4,5-Trichlorophenol	95-95-4	5	330
2,4,6-Trichlorophenol	88-06-2	4	330

[1] Reporting Limits are only for samples performed under the Michigan program.

Table 3 - Reportable Analytes for TestAmerica North Canton Standard Tests, Primary Standard

Analyte	CAS Number	TCLP	TCL	Appendix IX
Pyridine	110-86-1	X		X
N-nitrosodimethylamine	62-75-9			X
Aniline	62-53-3			X
Phenol	108-95-2		X	X
Bis(2-chloroethyl)ether	111-44-4		X	X
2-Chlorophenol	95-57-8		X	X
1,3-Dichlorobenzene	541-73-1		X	X
1,4-Dichlorobenzene	106-46-7	X	X	X
Benzyl alcohol	100-51-6			X
1,2-Dichlorobenzene	95-50-1		X	X
2-Methylphenol	95-48-7	X	X	X
2,2'-oxybis(1-chloropropane)	180-60-1		X	X
4-Methylphenol	106-44-5	X	X	X
N-Nitroso-di-n-propylamine	621-64-7		X	X
Hexachloroethane	67-72-1	X	X	X
Nitrobenzene	98-95-3	X	X	X
Isophorone	78-59-1		X	X
2-Nitrophenol	88-75-5		X	X
2,4-Dimethylphenol	105-67-9		X	X
Benzoic acid	65-85-0		X	
Bis(2-chloroethoxy)methane	111-91-1		X	X
2,4-Dichlorophenol	120-83-2		X	X
1,2,4-Trichlorobenzene	120-82-1		X	X
Naphthalene	91-20-3		X	X
4-Chloroaniline	106-47-8		X	X

Company Confidential & Proprietary

Table 3 (Cont'd)

Analyte	CAS Number	TCLP	TCL	Appendix IX
Hexachlorobutadiene	87-68-3	X	X	X
4-Chloro-3-methylphenol	59-50-7		X	X
2-Methylnaphthalene	91-57-6		X	X
Hexachlorocyclopentadiene	77-47-4		X	X
2,4,6-Trichlorophenol	88-06-2	X	X	X
2,4,5-Trichlorophenol	95-95-4	X	X	X
2-Chloronaphthalene	91-58-7		X	X
2-Nitroaniline	88-74-4		X	X
Dimethyl phthalate	131-11-3		X	X
Acenaphthylene	208-96-8		X	X
3-Nitroaniline	99-09-2		X	X
Acenaphthene	83-32-9		X	X
2,4-Dinitrophenol	51-28-5		X	X
4-Nitrophenol	100-02-7		X	X
Dibenzofuran	132-64-9		X	X
2,4-Dinitrotoluene	121-14-2	X	X	X
2,6-Dinitrotoluene	606-20-2		X	X
Diethylphthalate	84-66-2		X	X
4-Chlorophenyl phenyl ether	7005-72-3		X	X
Fluorene	86-73-7		X	X
4-Nitroaniline	100-01-6		X	X
4,6-Dinitro-2-methylphenol	534-52-1		X	X
N-Nitrosodiphenylamine	86-30-6		X	X
Azobenzene[1]	103-33-3		X	
4-Bromophenyl phenyl ether	101-55-3		X	X
Hexachlorobenzene	118-74-1	X	X	X
Pentachlorophenol	87-86-5	X	X	X
Phenanthrene	85-01-8		X	X
Anthracene	120-12-7		X	X
Carbazole	86-74-8		X	
Fluoranthene	206-44-0		X	X
Benzidine	92-87-5		X	
Pyrene	129-00-0		X	X
Butyl benzyl phthalate	85-68-7		X	X
3,3'-Dichlorobenzidine	91-94-1		X	X
Benzo(a)anthracene	56-55-3		X	X
Bis(2-ethylhexyl)phthalate	117-81-7		X	X
Chrysene	218-01-9		X	X
Di-n-octylphthalate	117-84-0		X	X
Benzo(b)fluoranthene	205-99-2		X	X
Benzo(k)fluoranthene	207-08-9		X	X
Benzo(a)pyrene	50-32-8		X	X
Indeno(1,2,3-cd)pyrene	193-39-5		X	X
Dibenz(a,h)anthracene	53-70-3		X	X

Company Confidential & Proprietary

Table 3 (Cont'd)

Analyte	CAS Number	TCLP	TCL	Appendix IX
Benzo(g,h,i)perylene	191-24-2		X	X
Benzaldehyde	100-52-7		X	
Caprolactam	105-60-2		X	
1,1-Biphenyl	92-52-4		X	
Atrazine	1912-24-9		X	

[1] Azobenzene is formed by decomposition of 1,2-diphenyhydrazine. If 1,2-diphenylhydrazine is requested, it will be analyzed as azobenzene.

Table 4 - Reportable Analytes for TestAmerica North Canton Standard Tests, Appendix IX Standard

Semivolatiles	CAS Number	TCL	Appendix IX
2-Picoline	109-06-8		X
N-Nitrosomethylethylamine	10595-95-6		X
Methyl methanesulfonate	66-27-3		X
N-Nitrosodiethylamine	55-18-5		X
Ethyl methanesulfonate	62-50-0		X
Pentachloroethane	76-01-7		X
Acetophenone	98-86-2	X	X
N-Nitrosopyrrolidine	930-55-2		X
N-Nitrosomorpholine	59-89-2		X
o-Toluidine	95-53-4		X
3-Methylphenol	108-39-4		X
N-Nitrosopiperidine	100-75-4		X
o,o,o-Triethyl-Phosphorothioate	126-68-1		X
a,a-Dimethyl-phenethylamine	122-09-8		X
2,6-Dichlorophenol	87-65-0		X
Hexachloropropene	1888-71-7		X
p-Phenylenediamine	106-50-3		X
n-Nitrosodi-n-butylamine	924-16-3		X
Safrole	94-59-7		X
1,2,4,5-Tetrachlorobenzene	95-94-3		X
Isosafrole	120-58-1		X
1,4-Dinitrobenzene	100-25-4		X
1,4-Naphthoquinone	130-15-4		X
1,3-Dinitrobenzene	99-65-0		X
Pentachlorobenzene	608-93-5		X
1-Naphthylamine	134-32-7		X
2-Naphthylamine	91-59-8		X
2,3,4,6-Tetrachlorophenol	58-90-2		X

Company Confidential & Proprietary

Table 4 (Cont'd)

Semivolatiles	CAS Number	TCL	Appendix IX
5-Nitro-o-toluidine	99-55-8		X
Thionazin	297-97-2		X
1,3,5-Trinitrobenzene	99-35-4		X
Sulfotepp	3689-24-5		X
Phorate	298-02-2		X
Phenacetin	62-44-2		X
Diallate	2303-16-4		X
Dimethoate	60-51-5		X
4-Aminobiphenyl	92-67-1		X
Pentachloronitrobenzene	82-68-8		X
Pronamide	23950-58-5		X
Disulfoton	298-04-4		X
2-secbutyl-4,6-dinitrophenol (Dinoseb)	88-85-7		X
4-Nitroquinoline-1-oxide	56-57-5		X
Famphur	52-85-7		X
Methapyrilene	91-80-5		X
Aramite	140-57-8		X
p-(Dimethylamino)azobenzene	60-11-7		X
p-Chlorobenzilate	510-15-6		X
3,3'-Dimethylbenzidine	119-93-7		X
2-Acetylaminofluorene	53-96-3		X
Dibenz(a,j)acridine[1]	224-42-0		
7,12-Dimethylbenz(a)anthracene	57-97-6		X
3-Methylcholanthrene	56-49-5		X
Hexachlorophene[2]	70-30-4		X
Diphenylamine[3]	122-39-4		X

[1] Skinner List Compound

[2] Hexachlorophene is a required analyte for Appendix IX. This compound is not stable, and therefore not included in the calibration standard. The characteristic ions for hexachlorophene are searched for in the chromatogram (see Section 12.2.1).

[3] Diphenylamine is a required compound for Appendix IX. N-nitrosodiphenylamine decomposes in the injection port to form diphenylamine. Therefore, these two compounds cannot be distinguished. Diphenylamine is not included in the calibration standard.

Company Confidential & Proprietary

Table 5 - Suggested Instrumental Conditions

Mass Range	35-500 amu
Scan Time	≤1 second/scan
Initial Column Temperature/Hold Time	60°C for 1 minutes
Column Temperature Program	60 - 320°C at 35°C/min for 3 min
Final Column Temperature/Hold Time	320°C (until at least one minute after benzo(g,h,i)perylene has eluted)
Injector Temperature	250 - 300°C
Transfer Line Temperature	250 - 300°C
Source Temperature	According to manufacturer's Specifications
Injector	Grob-type, split / splitless
Sample Volume	0.5 µl
Carrier Gas	Helium at 30 cm/sec

Company Confidential & Proprietary

Table 6 - DFTPP Key Ions and Ion Abundance Criteria

Mass	Ion Abundance Criteria
51	30 – 80% of mass 198
68	<2% of mass 69
70	<2% of mass 69
127	25 - 75% of mass 198
197	<1% of mass 198
198	Base peak, 100% relative abundance
199	5 – 9% of mass 198
275	10 – 30% of mass 198
365	> 0.75% of mass 198
441	Present, but less than mass 443
442	40 - 110% of mass 198
443	15 - 24% of mass 442

Table 7 - Analytes in Approximate Retention Time Order and Characteristic Ions, Primary Standard

Analyte	Primary	Secondary	Tertiary
N-nitrosodimethylamine	74	42	
Pyridine	79	52	
2-Fluorophenol (Surrogate Standard)	112	64	63
Phenol-d5 (Surrogate Standard)	99	42	71
Benzaldehyde	77	105	106
Aniline	93	66	
Phenol	94	65	66
Bis(2-chloroethyl)ether	93	63	95
2-Chlorophenol	128	64	130
1,3-Dichlorobenzene	146	148	113

Company Confidential & Proprietary

Table 7 - Analytes in Approximate Retention Time Order and Characteristic Ions, Primary Standard

Analyte	Primary	Secondary	Tertiary
1,4-Dichlorobenzene-d4 (Internal Standard)	152	150	115
1,4-Dichlorobenzene	146	148	113
Benzyl Alcohol	108	79	77
1,2-Dichlorobenzene	146	148	113
2-Methylphenol	108	107	79
2,2'-oxybis(1-chloropropane)[1]	45	77	79
4-Methylphenol	108	107	79
N-Nitroso-di-n-propylamine	70	42	101,130
Hexachloroethane	117	201	199
Nitrobenzene-d5 (Surrogate Standard)	82	128	54
Nitrobenzene	77	123	65
Isophorone	82	95	138
2-Nitrophenol	139	65	109
2,4-Dimethylphenol	107	121	122
Benzoic Acid	122	105	77
Bis(2-chloroethoxy)methane	93	95	123
2,4-Dichlorophenol	162	164	98
1,2,4-Trichlorobenzene	180	182	145
Naphthalene-d8 (Internal Standard)	136	68	54
Naphthalene	128	129	127
4-Chloroaniline	127	129	65
Hexachlorobutadiene	225	223	227
Caprolactam	113	55	56
4-Chloro-3-methylphenol	107	144	142
2-Methylnaphthalene	142	141	115
Hexachlorocyclopentadiene	237	235	272
2,4,6-Trichlorophenol	196	198	200
2,4,5-Trichlorophenol	196	198	200
1,1'-Biphenyl	154	153	76
2-Fluorobiphenyl (Surrogate Standard)	172	171	170
2-Chloronaphthalene	162	164	127
2-Nitroaniline	65	92	138
Dimethylphthalate	163	194	164
Acenaphthylene	152	151	153

Company Confidential & Proprietary

Table 7 (Cont'd)

Analyte	Primary	Secondary	Tertiary
2,6-Dinitrotoluene	165	63	89
Acenaphthene-d10 (Internal Standard)	164	162	160
3-Nitroaniline	138	108	92
Acenaphthene	153	152	154
2,4-Dinitrophenol	184	63	154
Dibenzofuran	168	139	84
4-Nitrophenol	109	139	65
2,4-Dinitrotoluene	165	63	89
Diethylphthalate	149	177	150
Fluorene	166	165	167
4-Chlorophenylphenylether	204	206	141
4-Nitroaniline	138	92	108
4,6-Dinitro-2-methylphenol	198	182	77
N-Nitrosodiphenylamine	169	168	167
2,4,6-Tribromophenol (Surrogate Standard)	330	332	141
Azobenzene	77	182	105
4-Bromophenylphenylether	248	250	141
Hexachlorobenzene	284	142	249
Atrazine	200	173	215
Pentachlorophenol	266	264	268
Phenanthrene-d10 (Internal Standard)	188	94	80
Phenanthrene	178	179	176
Anthracene	178	179	176
Carbazole	167	166	139
Di-n-butylphthalate	149	150	104
Fluoranthene	202	101	100
Benzidine	184	92	185
Pyrene	202	101	100
Terphenyl-d14 (Surrogate Standard)	244	122	212
Butylbenzylphthalate	149	91	206
Benzo(a)Anthracene	228	229	226
Chrysene-d12 (Internal Standard)	240	120	236
3,3'-Dichlorobenzidine	252	254	126
Chrysene	228	226	229
Bis(2-ethylhexyl)phthalate	149	167	279
Di-n-octylphthalate	149	167	43
Benzo(b)fluoranthene	252	253	125
Benzo(k)fluoranthene	252	253	125
Benzo(a)pyrene	252	253	125
Perylene-d12 (Internal Standard)	264	260	265
Indeno(1,2,3-cd)pyrene	276	138	277
Dibenz(a,h)anthracene	278	139	279
Benzo(g,h,i)perylene	276	138	277

Company Confidential & Proprietary

Table 8 - Additional Appendix IX Analytes in Approximate Retention Time Order and Characteristic Ions

Analyte	Primary	Secondary	Tertiary
2-Picoline	93	66	92
N-Nitrosomethylethylamine	88	42	43
Methyl methanesulfonate	80	79	65
N-Nitrosodiethylamine	102	44	57
Ethyl methanesulfonate	79	109	97
Pentachloroethane	117	119	167
Acetophenone	105	77	120
N-Nitrosopyrrolidine	100	41	42
N-Nitrosomorpholine	116	56	86
o-Toluidine	106	107	
3-Methylphenol	108	107	77
N-Nitrosopiperidine	114	42	55
o,o,o-Triethyl-Phosphorothioate	198	121	93
a,a-Dimethyl-phenethylamine	58	91	
2,6-Dichlorophenol	162	164	63
Hexachloropropene	213	215	211
p-Phenylenediamine	108	80	
n-Nitrosodi-n-butylamine	84	57	41
Safrole	162	104	77
1,2,4,5-Tetrachlorobenzene	216	214	218
Isosafrole 1	162	104	131
Isosafrole 2	162	104	131
1,4-Dinitrobenzene	168	75	122
1,4-Naphthoquinone	158	104	102
1,3-Dinitrobenzene	168	75	76
Pentachlorobenzene	250	248	252
1-Naphthylamine	143	115	
2-Naphthylamine	143	115	
2,3,4,6-Tetrachlorophenol	232	230	131
5-Nitro-o-toluidine	152	77	106
Thionazin	97	96	143
1,3,5-Trinitrobenzene	213	75	120
Sulfotepp	97	322	202
Phorate	75	97	121
Phenacetin	108	179	109
Diallate	86	234	
Dimethoate	87	93	125
4-Aminobiphenyl	169		
Pentachloronitrobenzene	237	142	214
Pronamide	173	175	255
Disulfoton	88	97	89
2-secbutyl-4,6-dinitrophenol (Dinoseb)	211	163	147

Company Confidential & Proprietary

Table 8 (Cont'd)

Analyte	Primary	Secondary	Tertiary
Methyl parathion	109	125	263
4-Nitroquinoline-1-oxide	190	128	160
Famphur	218	125	93
Methapyrilene	97	58	
Aramite 1	185	319	
Aramite 2	185	319	
p-(Dimethylamino)azobenzene	120	225	77
p-Chlorobenzilate	251	139	253
3,3'-Dimethylbenzidine	212	106	
2-Acetylaminofluorene	181	180	223
Dibenz(a,j)acridine	279	280	
7,12-Dimethylbenz(a)anthracene	256	241	120
3-Methylcholanthrene	268	252	253

Table 9 - 8270C LCS Control Compounds

LCS Compounds	Spiking Level, Conc. Added = 20 ug/L
1,2,4-Trichlorobenzene	20
Acenaphthene	20
2,4-Dinitrotoluene	20
Pyrene	20
N-Nitroso-di-n-propylamine	20
1,4-Dichlorobenzene	20
Pentachlorophenol	20
Phenol	20
2-Chlorophenol	20
4-Chloro-3-methylphenol	20
4-Nitrophenol	20

Company Confidential & Proprietary

Table 9A - 8270C All Analyte Spike Mix	
Acenaphthene	100
Acenaphthylene	100
Anthracene	100
Benzo(a)anthracene	100
Benzo(b)fluoranthene	100
Benzo(k)fluoranthene	100
Benzo(a)pyrene	100
Benzo(ghi)perylene	100
Benzyl butyl phthalate	100
Bis(2-chloroethyl)ether	100
Bis(2-chloroethoxy)methane	100
Bis(2-ethylhexyl)phthalate	100
Bis(2-chloroisopropyl)ether	100
4-Bromophenyl phenyl ether	100
2-Chloronaphthalene	100
4-Chlorophenyl phenyl ether	100
Chrysene	100
Dibenzo(a,h)anthracene	100
Di-n-butylphthalate	100
1,3-Dichlorobenzene	100
1,2-Dichlorobenzene	100
1,4-Dichlorobenzene	100
3,3'-Dichlorobenzidine	100
Diethyl phthalate	100
Dimethyl phthalate	100
2,4-Dinitrotoluene	100
2,6-Dinitrotoluene	100
Di-n-octylphthalate	100
Fluoranthene	100
Fluorene	100
Hexachlorobenzene	100
Hexachlorobutadiene	100
Hexachloroethane	100
Indeno(1,2,3-cd)pyrene	100
Isophorone	100
Naphthalene	100

Company Confidential & Proprietary

Table 9A (Cont'd)

Table 9A 8270C All Analyte Spike Mix	
N-Nitrosodi-n-propylamine	100
Phenanthrene	100
Pyrene	100
1,2,4-Trichlorobenzene	100
4-Chloro-3-methylphenol	100
2-Chlorophenol	100
2,4-Dichlorophenol	100
2,4-Dimethylphenol	100
2,4-Dinitrophenol	100
2-Methyl-4,6-dinitrophenol	100
2-Nitrophenol	100
4-Nitrophenol	100
Pentachlorophenol	100
Phenol	100
2,4,6-Trichlorophenol	100
Acetophenone	100
Atrazine	100
Caprolactam	100
Benzaldehyde	100
1,1′-Biphenyl	100
Benzoic Acid	100
1,4-Dioxane	100
Benzyl Alcohol	100
Carbazole	100
4-Chloroaniline	100
Dibenzofuran	100
Hexachlorocyclopentadiene	100
2-Methylnaphthalene	100
1-Methylnaphthalene	100
2-Methylphenol	100
4-Methylphenol	100
4-Nitroaniline	100
2-Nitroaniline	100
3-Nitroaniline	100
Pyridine	100

Company Confidential & Proprietary

Table 9A (Cont'd)

Table 9A 8270C All Analyte Spike Mix	
2,3,5,6-Tetrachlorophenol	100
2,4,5-Trichlorophenol	100
N-Nitrosodimethylamine	100
N-Nitrosodiphenylamine	100

Table 10 - TCLP LCS Compounds

LCS Compounds	Spiking Level, mg/L in extract
1,4-Dichlorobenzene	0.08
2,4-Dinitrotoluene	0.08
Hexachlorobenzene	0.08
Hexachlorobutadiene	0.08
Hexachloroethane	0.08
2-Methylphenol	0.08
3-Methylphenol	0.08
4-Methylphenol	0.08
Nitrobenzene	0.08
Pentachlorophenol	0.08
Pyridine	0.08
2,4,5-Trichlorophenol	0.08
2,4,6-Trichlorophenol	0.08

Recovery limits for the LCS and for matrix spikes are generated historical data, and are maintained by the QA Dept.

Table 11 - 8270C Surrogate Compounds

Surrogate Compounds	Spiking Level, Conc. Added = 20 ug/L / 30 ug/L
Nitrobenzene-d5	20
2-Fluorobiphenyl	20
Terphenyl-d14	20
1,2-Dichlorobenzene-d4[1]	20
Phenol-d5	30
2-Fluorophenol	30
2,4,6-Tribromophenol	30
2-Chlorophenol-d4[1]	30

Recovery limits for surrogates are generated from historical data, and are maintained by the QA department.

Table 12 - Calibration Ranges

Analyte	Calibration Range
Pyridine	0.25-12.5 ug/mL
N-nitrosodimethylamine	0.25-12.5 ug/mL
Aniline	0.25-12.5 ug/mL
Phenol	0.25-12.5 ug/mL
Bis(2-chloroethyl)ether	0.25-12.5 ug/mL
2-Chlorophenol	0.25-12.5 ug/mL
1,3-Dichlorobenzene	0.25-12.5 ug/mL
1,4-Dichlorobenzene	0.25-12.5 ug/mL
Benzyl alcohol	0.25-12.5 ug/mL
1,2-Dichlorobenzene	0.25-12.5 ug/mL
2-Methylphenol	0.25-12.5 ug/mL
2,2'-oxybis(1-chloropropane)[1]	0.25-12.5 ug/mL
4-Methylphenol	0.25-12.5 ug/mL
N-Nitroso-di-n-propylamine	0.25-12.5 ug/mL
Hexachloroethane	0.25-12.5 ug/mL
Nitrobenzene	0.25-12.5 ug/mL
Isophorone	0.25-12.5 ug/mL
2-Nitrophenol	0.25-12.5 ug/mL

Table 12 (Cont'd)

Analyte	Calibration Range
2,4-Dimethylphenol	0.25-12.5 ug/mL
Benzoic acid	0.25-12.5 ug/mL
Bis(2-chloroethoxy)methane	0.25-12.5 ug/mL
2,4-Dichlorophenol	0.25-12.5 ug/mL
1,2,4-Trichlorobenzene	0.25-12.5 ug/mL
Naphthalene	0.05-10 ug/mL
4-Chloroaniline	0.25-12.5 ug/mL
Hexachlorobutadiene	0.25-12.5 ug/mL
4-Chloro-3-methylphenol	0.25-12.5 ug/mL
2-Methylnaphthalene	0.05-10 ug/mL
Hexachlorocyclopentadiene	0.25-12.5 ug/mL
2,4,6-Trichlorophenol	0.25-12.5 ug/mL
2,4,5-Trichlorophenol	0.25-12.5 ug/mL
2-Chloronaphthalene	0.25-12.5 ug/mL
2-Nitroaniline	0.25-12.5 ug/mL
Dimethyl phthalate	0.25-12.5 ug/mL
Acenaphthylene	0.05-10 ug/mL
3-Nitroaniline	0.25-12.5 ug/mL
Acenaphthene	0.05-10 ug/mL
2,4-Dinitrophenol	0.25-12.5 ug/mL
4-Nitrophenol	0.25-12.5 ug/mL
Dibenzofuran	0.25-12.5 ug/mL
2,4-Dinitrotoluene	0.25-12.5 ug/mL
2,6-Dinitrotoluene	0.25-12.5 ug/mL
Diethylphthalate	0.25-12.5 ug/mL
4-Chlorophenyl phenyl ether	0.25-12.5 ug/mL
Fluorene	0.05-10 ug/mL
4-Nitroaniline	0.25-12.5 ug/mL
4,6-Dinitro-2-methylphenol	0.25-12.5 ug/mL
N-Nitrosodiphenylamine	0.25-12.5 ug/mL
Azobenzene[2]	0.25-12.5 ug/mL
4-Bromophenyl phenyl ether	0.25-12.5 ug/mL
Hexachlorobenzene	0.25-12.5 ug/mL
Pentachlorophenol	0.25-12.5 ug/mL

Table 12 (Cont'd)

Analyte	Calibration Range
Phenanthrene	0.05-10 ug/mL
Anthracene	0.05-10 ug/mL
Carbazole	0.05-10 ug/mL
Di-n-butyl phthalate	0.25-12.5 ug/mL
Fluoranthene	0.05-10 ug/mL
Benzidine	0.25-12.5 ug/mL
Pyrene	0.05-10 ug/mL
Butyl benzyl phthalate	0.25-12.5 ug/mL
3,3'-Dichlorobenzidine	0.25-12.5 ug/mL
Benzo(a)anthracene	0.05-10 ug/mL
Bis(2-ethylhexyl)phthalate	0.25-12.5 ug/mL
Chrysene	0.05-10 ug/mL
Di-n-octylphthalate	0.25-12.5 ug/mL
Benzo(b)fluoranthene	0.05-10 ug/mL
Benzo(k)fluoranthene	0.05-10 ug/mL
Benzo(a)pyrene	0.05-10 ug/mL
Indeno(1,2,3-cd)pyrene	0.05-10 ug/mL
Dibenz(a,h)anthracene	0.05-10 ug/mL
Benzo(g,h,i)perylene	0.05-10 ug/mL
Benzaldehyde	0.25-12.5 ug/mL
Caprolactam	0.25-12.5 ug/mL
1,1'-Biphenyl	0.25-12.5 ug/mL
Atrazine	0.25-12.5 ug/mL

[1] 2,2'oxybis(1-chloropropane) was formerly known as bis(2-chloroisopropyl)ether.

[2] Azobenzene is formed by decomposition of 1,2-diphenyhydrazine. If 1,2-diphenylhydrazine is requested, it will be analyzed as azobenzene.

Note: Nine calibrations standards are prepared varying in concentration from 0.05 ug/mL to 12.5 ug/mL. A minimum of 5 calibration concentrations will be used for initial calibration . The concentration range of each analyte is listed in the table.

Table 13 - Calibration Ranges, Appendix IX

Semivolatiles	Calibration Range
2-Picoline	0.25-12.5 ug/mL
N-Nitrosomethylethylamine	0.25-12.5 ug/mL
Methyl methanesulfonate	0.25-12.5 ug/mL
N-Nitrosodiethylamine	0.25-12.5 ug/mL
Ethyl methanesulfonate	0.25-12.5 ug/mL
Pentachloroethane	0.25-12.5 ug/mL
Acetophenone	0.25-12.5 ug/mL
N-Nitrosopyrrolidine	0.25-12.5 ug/mL
N-Nitrosomorpholine	0.25-12.5 ug/mL
o-Toluidine	0.25-12.5 ug/mL
3-Methylphenol	0.25-12.5 ug/mL
N-Nitrosopiperidine	0.25-12.5 ug/mL
o,o,o-Triethyl-Phosphorothioate	0.25-12.5 ug/mL
a,a-Dimethyl-phenethylamine	0.25-12.5 ug/mL
2,6-Dichlorophenol	0.25-12.5 ug/mL
Hexachloropropene	0.25-12.5 ug/mL
p-Phenylenediamine	0.25-12.5 ug/mL
n-Nitrosodi-n-butylamine	0.25-12.5 ug/mL
Safrole	0.25-12.5 ug/mL
1,2,4,5-Tetrachlorobenzene	0.25-12.5 ug/mL
Isosafrole 1 + 2	0.25-12.5 ug/mL
1,4-Dinitrobenzene	0.25-12.5 ug/mL
1,4-Naphthoquinone	0.25-12.5 ug/mL
1,3-Dinitrobenzene	0.25-12.5 ug/mL
Pentachlorobenzene	0.25-12.5 ug/mL
1-Naphthylamine	0.25-12.5 ug/mL
2-Naphthylamine	0.25-12.5 ug/mL
2,3,4,6-Tetrachlorophenol	0.25-12.5 ug/mL
5-Nitro-o-toluidine	0.25-12.5 ug/mL
Thionazin	0.25-12.5 ug/mL
1,3,5-Trinitrobenzene	0.25-12.5 ug/mL
Sulfotepp	0.25-12.5 ug/mL
Phorate	0.25-12.5 ug/mL
Phenacetin	0.25-12.5 ug/mL
Diallate 1 + 2	0.25-12.5 ug/mL
Dimethoate	0.25-12.5 ug/mL
4-Aminobiphenyl	0.25-12.5 ug/mL
Pentachloronitrobenzene	0.25-12.5 ug/mL
Pronamide	0.25-12.5 ug/mL
Disulfoton	0.25-12.5 ug/mL
2-secbutyl-4,6-dinitrophenol (Dinoseb)	0.25-12.5 ug/mL
Methyl parathion	0.25-12.5 ug/mL

Company Confidential & Proprietary

Table 13 (Cont'd)

Semivolatiles	Calibration Range
4-Nitroquinoline-1-oxide	0.25-12.5 ug/mL
Parathion	0.25-12.5 ug/mL
Isodrin	0.25-12.5 ug/mL
Kepone	0.25-12.5 ug/mL
Famphur	0.25-12.5 ug/mL
Methapyrilene	0.25-12.5 ug/mL
Aramite 1 and 2	0.25-12.5 ug/mL
p-(Dimethylamino)azobenzene	0.25-12.5 ug/mL
p-Chlorobenzilate	0.25-12.5 ug/mL
3,3'-Dimethylbenzidine	0.25-12.5 ug/mL
2-Acetylaminofluorene	0.25-12.5 ug/mL
Dibenz (a,j)acridine	0.25-12.5 ug/mL
7,12-Dimethylbenz(a)anthracene	0.25-12.5 ug/mL
3-Methylcholanthrene	0.25-12.5 ug/mL

Note: Nine calibrations standards are prepared varying in concentration from 0.05 ug/mL to 12.5 ug/mL. A minimum of five calibration concentrations will be used for initial calibration . The concentration range of each analyte is listed in the table.

Table 14A - Semivolatile Internal Standards with Corresponding Analytes Assigned for Quantitation

1,4-Dichlorobenzene-d4	Naphthalene-d8	Acenaphthene-d10
Bis(2-chloroethyl)ether	Bis(2-chloroethoxy)methane	Acenaphthene
Bis(2-chloroisopropyl)ether	2,4-Dichlorophenol	Acenaphthylene
2-Chlorophenol	2,4-Dimethylphenol	2-Chloronaphthalene
1,2-Dichlorobenzene	Hexachlorobutadiene	4-Chlorophenyl phenyl ether
1,3-Dichlorobenzene	Isophorone	Diethyl phthalate
1,4-Dichlorobenzene	Nitrobenzene	Dimethyl phthalate
2-Fluorophenol (surrogate)	Nitrobenzene-d_8 (surrogate)	2,4-Dinitrophenol
Hexachloroethane	2-Nitrophenol	2,4-Dinitrotoluene
N-Nitroso-di-n-propylamine	1,2,4-Trichlorobenzene	2,6-Dinitrotoluene
Phenol		Fluorene
Phenol-d6 (surrogate)		2-Fluorobiphenyl (surrogate)
		4-Nitrophenol
		2,4,6-Tribromophenol (surrogate)
		2,4,6-Trichlorophenol

Table 14B – Semivolatile Internal Standards with Corresponding Analytes Assigned for Quantitation

Phenanthrene-d10	Chrysene-d12	Perylene-d12
Anthracene	Benzo(a)anthracene	Benzo(b)fluoranthene
4-Bromophenyl phenyl ether	Bis(2-ethylhexyl)phthalate	Benzo(k)fluoranthene
Di-n-butyl phthalate	Chrysene	Benzo(g,h,i)perylene
4,6-Dinitro-2-methylphenol	3,3'-Dichlorobenzidine	Benzo(a)pyrene
Fluoranthene	Pyrene	Dibenz(a,h)anthracene
Hexachlorobenzene	Terphenyl-dl4 (surrogate)	Di-n-octylphthalate
Pentachlorophenol		Indeno(1,2,3-cd)pyrene
Phenanthrene		3-Methylcholanthrene

Company Confidential & Proprietary

Title: DETERMINATION OF VOLATILE ORGANICS BY GC/MS BASED ON METHODS 8260B AND 8260A

[Method: EPA Methods 8260B AND 8260A]

Approvals (Signature/Date):

Technology Specialist	Date	Health & Safety Coordinator	Date
Quality Assurance Manager	Date	Technical Director	Date
Laboratory Director	Date		

This SOP was previously identified as SOP No. NC-MS-019, Rev 0, dated 06/30/08

Copyright Information:

This documentation has been prepared by TestAmerica Analytical Testing Corp. and its affiliates ("TestAmerica"), solely for their own use and the use of their customers in evaluating their qualifications and capabilities in connection with a particular project. The user of this document agrees by its acceptance to return it to TestAmerica upon request and not to reproduce, copy, lend, or otherwise disclose its contents, directly or indirectly, and not to use if for any other purpose other than that for which it was specifically provided. The user also agrees that where consultants or other outside parties are involved in the evaluation process, access to these documents shall not be given to said parties unless those parties also specifically agree to these conditions.

THIS DOCUMENT CONTAINS VALUABLE CONFIDENTIAL AND PROPRIETARY INFORMATION. DISCLOSURE, USE OR REPRODUCTION OF THESE MATERIALS WITHOUT THE WRITTEN AUTHORIZATION OF TESTAMERICA IS STRICTLY PROHIBITED. THIS UNPUBLISHED WORK BY TESTAMERICA IS PROTECTED BY STATE AND FEDERAL LAW OF THE UNITED STATES. IF PUBLICATION OF THIS WORK SHOULD OCCUR THE FOLLOWING NOTICE SHALL APPLY: ©COPYRIGHT 2008 TESTAMERICA ANALYTICAL TESTING CORP. ALL RIGHTS RESERVED.

Facility Distribution No. _____ **Distributed To:** _____

TABLE OF CONTENTS

1. SCOPE AND APPLICATION 4

2. SUMMARY OF METHOD 4

3. DEFINITIONS 5

4. INTERFERENCES 6

5. SAFETY 7

6. EQUIPMENT AND SUPPLIES 9

7. REAGENTS AND STANDARDS 11

8. SAMPLE COLLECTION, PRESERVATION AND STORAGE 12

9. QUALITY CONTROL 19

10. CALIBRATION AND STANDARDIZATION 22

11. PROCEDURE 26

12. DATA ANALYSIS AND CALCULATIONS 31

13. METHOD PERFORMANCE 37

14. POLLUTION PREVENTION 38

15. WASTE MANAGEMENT 38

16. REFERENCES 38

17. MISCELLANEOUS 40

Company Confidential & Proprietary

LIST OF TABLES

Table 1 TestAmerica Primary Standard and Reporting Limits

Table 2 TestAmerica Primary Standard Calibration Levels

Table 2A TestAmerica Primary Standard Calibration Levels- Low Level

Table 3 TestAmerica Appendix IX Standard and Reporting Limits

Table 4 TestAmerica Appendix IX Standard Calibration Levels

Table 5 Reportable Analytes for TestAmerica Standard Tests, Primary Standard

Table 6 Reportable Analytes for TestAmerica Standard Tests, Appendix IX Standard

Table 7 Internal Standards

Table 8 Surrogate Standards

Table 9 Matrix Spike / LCS Control Standards

Table 10 BFB Tune Criteria

Table 11 SPCC Compounds and Minimum Response Factors

Table 12 CCC Compounds

Table 13 Characteristic Ions

Company Confidential & Proprietary

1.0 SCOPE AND APPLICATION

1.1. This method is applicable to the determination of Volatile Organic Compounds in waters, wastewater, soils, sludges, and other solid matrices. Standard analytes are listed in Tables 5 and 6.

1.2.1. This SOP is applicable to Method 8260B. It may also be used for analysis following Method 8260A. The associated LIMS method codes are QK (8260B) and MZ (8260A). Ohio VAP projects are distinguished by Program Code 2J. The following Prep Codes are used: 15 (5 mL purge), 25 (low-level 5mL purge), 4B (5035, Methanol Preservation, EnCore™), 4D (5035, Sodium Bisulfate Preservation, EnCore™), 4P (Frozen, EnCore™), M8 (5035A, Frozen Encore™), and 73 (5030A Methanol Prep).

1.3. This method can be used to quantify most volatile organic compounds that have boiling points below 200°C and are insoluble or slightly soluble in water. Volatile water-soluble compounds can be included in this analytical technique; however, for more soluble compounds, quantitation limits are approximately ten times higher because of poor purging efficiency.

1.4. The method is based upon a purge and trap, gas chromatograph/mass spectrometric (GC/MS) procedure. The approximate working range is 5 to 200 µg/L for 5 mL waters, 1 to 40 µg/L for low-level waters, 5 to 200 µg/kg for low-level soils, and 250 to 10,000 µg/kg for medium-level soils. Reporting limits are listed in Tables 1 and 3.

1.5. Method performance is monitored through the use of surrogate compounds, matrix spike/matrix spike duplicates, and laboratory control spike samples.

2.0 SUMMARY OF METHOD

2.1. Volatile compounds are introduced into the gas chromatograph by the purge and trap method. The components are separated via the chromatograph and detected using a mass spectrometer, which is used to provide both qualitative and quantitative information.

2.2. Aqueous samples are purged directly. Soils are preserved by extracting the volatile analytes into methanol. Soil samples may be preserved with sodium bisulfate or by freezing and purging directly.

2.3. In the purge and trap process, an inert gas is bubbled through the solution at ambient temperature or at 40°C (40°C required for low level soils) and the volatile components are efficiently transferred from the aqueous phase to the vapor phase. The vapor is swept through a sorbant column where the volatile components are trapped. After purging is completed, the sorbant column (trap) is heated and backflushed with inert gas to desorb the components onto a gas chromatographic column. The gas chromatographic column is then heated to elute the components, which are detected with a mass spectrometer.

Company Confidential & Proprietary

2.4. Qualitative identifications are confirmed by analyzing standards under the same conditions used for samples and comparing the resultant mass spectra and GC retention times. Each identified component is quantified by relating the MS response for an appropriate selected ion produced by that compound to the MS response for another ion produced by an internal standard.

3.0 DEFINITIONS

3.1. Batch

The batch is a set of up to 20 samples of the same matrix processed using the same procedures and reagents within the same time period. Using this method, each BFB analysis will start a new batch. Batches for medium level soils are defined at the sample preparation stage and may be analyzed on multiple instruments over multiple days, although reasonable effort must be made to keep the samples together.

3.1.1. The Quality Control batch must contain a matrix spike/spike duplicate (MS/MSD), a Laboratory Control Sample (LCS), and a method blank. Refer to the TestAmerica QC program document (QA-003) for further details of the batch definition.

3.2. Method Blank

3.2.1. A method blank consisting of all reagents added to the samples must be analyzed with each batch of samples. The method blank is used to identify any background interference or contamination of the analytical system which may lead to the reporting of elevated concentration levels or false positive data.

3.3. Laboratory Control Sample (LCS)

3.3.1. Laboratory Control Samples are well characterized, laboratory generated samples used to monitor the laboratory's day-to-day performance of routine analytical methods. The LCS, spiked with a group of target compounds representative of the method analytes, is used to monitor the accuracy of the analytical process, independent of matrix effects. Ongoing monitoring of the LCS results provides evidence that the laboratory is performing the method within accepted QC guidelines for accuracy and precision.

3.4. Surrogates

3.4.1. Surrogates are organic compounds which are similar to the target analyte(s) in chemical composition and behavior in the analytical process, but which are not normally found in environmental samples. Each sample, blank, LCS, and MS/MSD is spiked with surrogate standards. Surrogate spike recoveries must be evaluated by determining whether the concentration (measured as percent recovery) falls within

the required recovery limits.

3.5. Matrix Spike/Matrix Spike Duplicate (MS/MSD)

3.5.1. A matrix spike is an environmental sample to which known concentrations of target analytes have been added. A matrix spike duplicate is a second aliquot of the same sample, which is prepared and analyzed along with the sample and matrix spike. Matrix spikes and duplicates are used to evaluate accuracy and precision in the actual sample matrix.

3.6. Calibration Check Compound (CCC)

3.6.1. CCCs are a representative group of compounds, which are used to evaluate initial calibrations and continuing calibrations. Relative percent difference for the initial calibration and % drift for the continuing calibration response factors are calculated and compared to the specified method criteria.

3.7. System Performance Check Compounds (SPCC)

3.7.1. SPCCs are compounds, which are sensitive to system performance problems and are used to evaluate system performance and sensitivity. A response factor from the continuing calibration is calculated for the SPCC compounds and compared to the specified method criteria.

4. INTERFERENCES

4.1. Method interferences may be caused by contaminants in solvents, reagents, glassware, and other processing apparatus that lead to discrete artifacts. All of these materials must be routinely demonstrated to be free from interferences under conditions of the analysis by running laboratory method blanks as described in the Quality Control section. All glassware is cleaned per SOP NC-QA-014. The use of ultra high purity gases, prepurged purified reagent water, and approved lots of purge and trap grade methanol will greatly reduce introduction of contaminants. In extreme cases, the purging vessels may be pre-purged to isolate the instrument from laboratory air contaminated by solvents used in other parts of the laboratory.

4.2. Samples can be contaminated by diffusion of volatile organics (particularly methylene chloride and fluorocarbons) into the sample through the septum seal during shipment and storage. A field blank prepared from reagent water and carried through the sampling and handling protocol can serve as a check on such contamination. Refer to SOP NC-QA-020 for additional information on holding blanks.

4.3. Matrix interferences may be caused by non-target contaminants that are co-extracted from

the sample. The extent of matrix interferences will vary considerably from source to source depending upon the nature and diversity of the site being sampled.

4.4. Cross-contamination can occur whenever high-level and low-level samples are analyzed sequentially or in the same purge position on an autosampler. Whenever an unusually concentrated sample is analyzed, it must be followed by one or more blanks to check for cross-contamination. The purge and trap system may require extensive bake-out and cleaning after a high-level sample.

4.5. Some samples may foam when purged due to surfactants present in the sample. When this kind of sample is encountered, the sample must be diluted.

5. SAFETY

5.1 Employees must abide by the policies and procedures in the Corporate Environmental Health and Safety Manual and this document.

5.2. Eye protection that protects against splash, laboratory coat, and appropriate gloves must be worn while samples, standards, solvents, and reagents are being handled. Disposable gloves that have been contaminated must be removed and discarded; other gloves must be cleaned immediately. Cut-resistant gloves MUST be worn when opening VOA vials and when doing any other task that presents a strong possibility of getting cut.

5.3. Primary Materials Used

5.3.1. The following is a list of the materials used in this method, which have a serious or significant hazard rating. NOTE: This list does not include all materials used in the method. The table contains a summary of the primary hazards listed in the MSDS for each of the materials listed in the table. A complete list of materials used in the method can be found in the Reagents and Standards section. Employees must review the information in the MSDS for each material before using it for the first time or when there are major changes to the MSDS.

Material (1)	Hazards	Exposure Limit (2)	Signs and symptoms of exposure

Sodium bisulfate	Irritant	None	Causes mild to severe irritation to the eyes. Prolonged exposure may cause burn if not flushed with water. May cause mild irritation to skin. Prolonged exposure may cause burn if not flushed with water.
Hydrochloric Acid	Corrosive Poison	5 ppm-Ceiling	Inhalation of vapors can cause coughing, choking, inflammation of the nose, throat, and upper respiratory tract, and in severe cases, pulmonary edema, circulatory failure, and death. Can cause redness, pain, and severe skin burns. Vapors are irritating and may cause damage to the eyes. Contact may cause severe burns and permanent eye damage.
Methanol	Flammable Poison Irritant	200 ppm-TWA	A slight irritant to the mucous membranes. Toxic effects exerted upon nervous system, particularly the optic nerve. Symptoms of overexposure may include headache, drowsiness and dizziness. Methyl alcohol is a defatting agent and may cause skin to become dry and cracked. Skin absorption can occur; symptoms may parallel inhalation exposure. Irritant to the eyes.
1 – Always add acid to water to prevent violent reactions.			
2 – Exposure limit refers to the OSHA regulatory exposure limit.			

5.4. It is recommended that analysts break up work tasks to avoid repetitive motion tasks, such as opening a large number of vials or containers in one time period.

5.5. Exposure to chemicals must be maintained **as low as reasonably achievable.** All samples with a sticker that reads "Caution/Use Hood!" **must** be opened in the hood. Contact the EH&S Coordinator if this is not possible. Solvent and waste containers must be kept closed unless transfers are being made. MS VOA samples may be prepared outside of the hood, unless it is known that concentrations are high.

5.6. The preparation of standards and reagents must be conducted in a fume hood with the sash closed as far as the operations will permit. MS VOA standards may be prepared outside of the hood due to low concentrations of analytes.

5.7. All work must be stopped in the event of a known or potential compromise to the health and safety of a TestAmerica associate. The situation must be reported **immediately** to the EH&S Coordinator and the laboratory Group Leader.

5.8. Laboratory personnel assigned to perform hazardous waste disposal procedures must have a working knowledge of the established procedures and practices outlined in the TestAmerica Corporate Environmental Health and Safety Manual. These employees must have training on the hazardous waste disposal practices initially upon assignment of these tasks, followed

by an annual refresher training.

5.9. Specific Safety Concerns or Requirements

5.9.1. The gas chromatograph and mass spectrometer contain zones that have elevated temperatures. The analyst needs to be aware of the locations of those zones, and must cool them to room temperature prior to working on them.

5.9.2. The mass spectrometer is under deep vacuum. The mass spectrometer must be brought to atmospheric pressure prior to working on the source.

5.9.3. There are areas of high voltage in both the gas chromatograph and the mass spectrometer. Depending on the type of work involved, either turn the power to the instrument off, or disconnect it from its source of power.

5.9.4. Sodium bisulfate creates Sulfuric Acid when mixed with water.

6. EQUIPMENT AND SUPPLIES

6.1. Microsyringes: 10 µL and larger

6.2. Syringe: 5, 25, or 50 mL glass with luerlok tip, if applicable to the purging device.

6.3. Balance: Analytical, capable of accurately weighing 0.0001g, and a top-loading balance capable of weighing 0.1g

6.4. Glassware:

6.4.1. Vials: 20 and 40 mL with screw caps and Teflon® liners.

6.4.2. Volumetric flasks: 10 mL and 100 mL, class A with ground-glass stoppers.

6.5. Spatula: Stainless steel.

6.6. Disposable pipettes: Pasteur, 5 ¾ in.

6.7. pH paper: Wide range, pH 0-14.

6.8. Gases:

6.8.1. Helium: Ultra high purity, gr. 5, 99.999%.

6.8.2. Nitrogen: Ultra high purity from cylinders or gas generators may be used as an alternative to helium for purge gas.

Company Confidential & Proprietary

6.9. Purge and Trap Device: The purge and trap device consists of the sample purger, trap, and desorber.

6.9.1. Sample Purger: The recommended purging chamber is designed to accept 5 mL samples with a water column at least 3 cm deep. The purge gas must pass through the water column as finely divided bubbles, each with a diameter of less than 3 mm at the origin. The purge gas must be introduced no more than 5 mm from the base of the water column. Alternative sample purge devices may be used provided equivalent performance is demonstrated. Low-level soils are purged directly from a VOA vial.

6.9.2. Trap: A variety of traps may be used, depending on the target analytes required. One of the traps used is the Vocarb 3000 trap. Other traps such as the OI 10 may be used if the Quality Control criteria are met. Refer also to instrument operating manuals located within the laboratory.

6.9.3. Desorber: The desorber must be capable of rapidly heating the trap to at least 180°C. Many such devices are commercially available.

6.9.4. Sample Heater: A heater capable of maintaining the purge device at 40°C is necessary for low-level soil analysis.

6.10. Gas Chromatograph/Mass Spectrometer System:

6.10.1. Gas Chromatograph: The gas chromatograph (GC) system must be capable of temperature programming.

6.10.2. Gas Chromatographic Columns: Capillary columns are used. Some typical columns are listed below:

6.10.2.1. Column 1: 20m x 0.18 ID DB-624 with 1 µm film thickness.

6.10.2.2. Mass Spectrometer: The mass spectrometer must be capable of scanning 35-300 AMU every two seconds or less, using 70 volts electron energy in the electron impact mode and capable of producing a mass spectrum that meets the required criteria when 50 ng of 4-Bromofluorobenzene (BFB) are injected onto the gas chromatograph column inlet.

6.10.3. GC/MS Interface: In general direct introduction to the mass spectrometer is used but any interface that achieves all acceptance criteria may be used.

6.10.4. Data System: A computer system that allows the continuous acquisition and storage on machine-readable media of all mass spectra obtained throughout the

duration of the chromatographic program. The computer must have software that allows searching any GC/MS data file for ions of a specified mass and plotting such ion abundances versus time or scan number. This type of plot is defined as an Extracted Ion Current Profile (EICP). Software must also be available that allows integrating the abundances in any EICP between the specified time or scan-number limits. Also, for the non-target compounds, software must be available that allows for the comparison of sample spectra against reference library spectra. The NIST/EPA mass spectral library must be used as the reference library. The computer system must also be capable of backing up data for long-term off-line storage.

7. REAGENTS AND STANDARDS

7.1. Reagents

7.1.1. Methanol: Purge and Trap grade, high purity

7.1.2. Reagent Water: High purity water that meets the requirements for a method blank when analyzed (see Section 9.3). Reagent water may be purchased as commercial distilled water and prepared by purging with an inert gas overnight. Other methods of preparing reagent water are acceptable.

7.1.3. Hydrochloric Acid – (1:1 v/v): Reagent grade or equivalent

7.1.4. Sodium bisulfate: Reagent grade or equivalent

7.2. Standards

7.2.1. Calibration Standard

7.2.1.1. Stock Solutions: Stock solutions may be purchased as certified solutions from commercial sources or prepared from pure standard materials as appropriate. These standards are prepared in methanol and stored in Teflon®-sealed screw-cap bottles with minimal headspace at -10° to -20°C.

7.2.1.2. Working standards: A working solution containing the compounds of interest prepared from the stock solution(s) in methanol. These standards are stored in the freezer or as recommended by the manufacturer. Working standards are monitored by comparison to the initial calibration curve. If any of the calibration check compounds drift in response from the initial calibration by more than 20% then corrective action is necessary. This may include steps such as instrument maintenance, preparing a new calibration verification standard or tuning the instrument. If the corrective actions do not correct the problem then a new initial calibration must be performed.

Company Confidential & Proprietary

7.2.1.3. Aqueous Calibration Standards are prepared in reagent water using the secondary dilution standards. These aqueous standards must be prepared daily.

7.2.1.4. If stock or secondary dilution standards are purchased in sealed ampoules, they may be used up to the manufacturer's expiration date.

7.2.1.5. Additional information can be found in SOP NC-QA-017.

7.2.2. Internal Standards: Internal standards are added to all samples, standards, and blank analyses. Refer to Table 7 for internal standard components.

7.2.3. Surrogate Standards: Refer to Table 8 for surrogate standard components and spiking levels.

7.2.4. Laboratory Control Sample Spiking Solutions: Refer to Table 9 for LCS components and spiking levels.

7.2.5. Matrix Spiking Solutions: The matrix spike contains the same components as the LCS. Refer to Table 9.

7.2.6. Tuning Standard: A standard is made up that will deliver 50 ng on column upon injection. A recommended concentration of 50 ng/µL of 4-Bromofluorobenzene in methanol is prepared as described in Sections 7.2.1.1 and 7.2.1.2.

7.2.7. All standard preparation information is detailed in the Standard Logbook.

8. SAMPLE COLLECTION, PRESERVATION, AND STORAGE

8.1. Holding times for all volatile analysis are 14 days from sample collection to analysis.

8.2. For DoD samples, water samples are normally preserved at pH $\leq$ 2 with 1:1 hydrochloric acid. Unpreserved water samples must be analyzed within seven days of sampling.

8.3. Solid samples are field preserved with sodium bisulfate solution or by freezing upon receipt at the laboratory for low-level analysis, or with methanol for medium-level analysis. Soil samples can also be taken using the EnCore™ sampler and preserved in the lab within 48 hours of sampling. Analysis must be completed 14 days from sampling. At specific client request, unpreserved soil samples may be accepted.

8.4. There are several methods of sampling soil. The recommended method, which provides the minimum of field difficulties, is to take an EnCore™ sample. (The 5g or 25g sampler can be used, depending on client preference). Following shipment back to the lab, the soil is preserved in methanol. This is the medium level procedure. If very low detection limits are needed (< 50 µg/kg for most analytes), then it will be necessary to use two additional 5g

EnCore™ samplers or to use field preservation.

8.5. Sample collection for medium level analysis using EnCore™ samplers.

8.5.1. Ship one 5g (or 25g) EnCore™ sampler per field sample position.

8.5.2. An additional 2 oz plastic bottle must be shipped for percent moisture determination.

8.5.3. When the samples are returned to the lab, extrude the (nominal) 5g (or 25g) sample into a tared VOA vial containing 5 mL methanol (25 mL methanol for the 25g sampler). Obtain the weight of the soil added to the vial and note on the label.

8.5.4. Add the correct amount of surrogate spiking mixture. (Add 25 µL of 2500 µg/mL solution for a nominal 25g sample, 5 µL for a nominal 5g sample.) Refer to Section 17.2 for Michigan project criteria.

8.5.5. Add the correct amount of matrix spiking solution to the matrix spike and matrix spike duplicate samples. (Add 500 µL of 50 µg/mL solution for a nominal 25 g sample, 100 µL for a nominal 5g sample.) Reduce the volume of methanol added to ensure the final volume is 25 mL for nominal 25g sample or 5 mL methanol for a nominal 5g sample. Refer to Section 17.2 for Michigan project criteria.

8.5.6. Prepare an LCS for each batch by adding the correct amount of matrix spiking solution to clean methanol. (500 µL of spike to 25 mL methanol or 100 µL spike to 5 mL methanol). Refer to Section 17.2 for Michigan project criteria.

8.5.7. Shake the samples for two minutes to distribute the methanol throughout the soil.

8.6. Sample collection for medium-level analysis using field methanol preservation

8.6.1. Prepare a 2-oz sample container by adding 25 mL purge and trap grade methanol. (If a 5g sample is to be used, add 5 mL methanol to a 2 oz container or VOA vial).

8.6.2. Seal the bottle and attach a label.

8.6.3. Weigh the bottle to the nearest 0.01g, and note the weight on the label.

8.6.4. Ship with appropriate sampling instructions.

8.6.5. Each sample will require an additional 2 oz plastic bottle with no preservative

for percent moisture determination.

8.6.6. At client request, the methanol addition and weighing may also be performed in the field.

8.6.7. When the samples are returned to the lab, obtain the weight of the soil added to the vial and note on the label.

8.6.8. Add the correct amount of surrogate spiking mixture. (Add 25 µL of 2500 µg/mL solution for a nominal 25g sample, 5 µL for a nominal 5g sample.) Refer to Section 17.2 for Michigan project criteria.

8.6.9. Add the correct amount of matrix spiking solution to the matrix spike and matrix spike duplicate samples. (Add 500 µL of 50 µg/mL solution for a nominal 25g sample, 100 µL for a nominal 5g sample.) Reduce the volume of methanol added to ensure the final volume is 25 mL for nominal 25g sample or 5 mL methanol for a nominal 5g sample. Refer to Section 17.2 for Michigan project criteria.

8.6.10. Prepare an LCS for each batch by adding the correct amount of matrix spiking solution to clean methanol. (500 µL of spike to 25 mL methanol or 100 µL spike to 5 mL methanol). Refer to Section 17.2 for Michigan project criteria.

8.6.11. Shake the samples for two minutes to distribute the methanol throughout the soil.

8.7. Low-level procedure

8.7.1. If low detection limits are required (typically < 50 µg/kg), low-level soil preservation must be used. However, it is also necessary to take a sample for the medium-level (field methanol preserved or using the EnCore™ sampler) procedure in case the concentration of analytes in the soil is above the calibration range of the low-level procedure.

8.7.2. A purge and trap autosampler capable of sampling from a sealed vial is required for analysis of samples collected using this method. (Varian Archon or O.I. 4552).

8.7.3. The soil sample is taken using a 5g EnCore™ sampling device and returned to the lab. It is recommended that two EnCore™ samplers be used for each field sample position to allow for any reruns than may be necessary. A separate sample for % moisture determination is also necessary.

8.7.4. Prepare VOA vials for sodium bisulfate preservation by adding a magnetic stir bar, approximately 1g of sodium bisulfate, and 5 mL of reagent water. Prepare vials for preservation by freezing by adding a stir bar and 5 mL reagent water.

Company Confidential & Proprietary

8.7.5. Seal and label the vial. It is strongly recommended that the vial is labeled with an indelible marker rather than a paper label, since paper labels may cause the autosampler to bind and malfunction. The label absolutely must not cover the neck of the vial or the autosampler will malfunction.

8.7.6. Weigh the vial to the nearest 0.1g, and note the weight on the label.

8.7.7. Extrude the soil sample from the EnCore™ sampler into the prepared VOA vial. Reweigh the vial to obtain the weight of soil, and note on the label.

Note: Soils containing carbonates may effervesce when added to the sodium bisulfate solution. If this is the case at a specific site, add 5 mL of water instead, and freeze at <-10°C within 48 hours. The sample must be analyzed within 14 days after sampling and stored at a 45-degree angle in the freezer.

8.7.8. Alternatively the sodium bisulfate preservation may be performed in the field. This is not recommended because of the many problems that can occur in the field setting. Ship at least two vials per sample. The field samplers must determine the weight of soil sampled. Each sample will require an additional 2 oz plastic bottle with no preservative for percent moisture determination, and an additional VOA vial preserved with methanol for the medium level procedure. Depending on the type of soil, it may also be necessary to ship vials with no or extra preservative.

8.8. Unpreserved soils

8.8.1. At specific client request, unpreserved soils packed into glass jars or brass tubes may be accepted and sub-sampled in the lab. This is the old procedure based on Method 5030A and Method 8260A. It is no longer included in SW846 and is likely to generate results that are biased low, possibly by more than an order of magnitude.

8.9. Aqueous samples are stored in glass containers with Teflon®-lined septa at 4°C +/- 2°C with minimum headspace.

8.10. The maximum holding time is 14 days from sampling until the sample is analyzed. (Samples that are found to be unpreserved still have a 14-day holding time. However, they should be analyzed as soon as possible. The lack of preservation must be addressed in the case narrative). Maximum holding time for the EnCore™ sampler (before the sample is added to methanol or sodium bisulfate) is 48 hours.

8.11. A holding blank is stored with the samples. This is analyzed weekly. It is replaced every seven days.

EnCore procedure when low level is not required (field steps in gray)

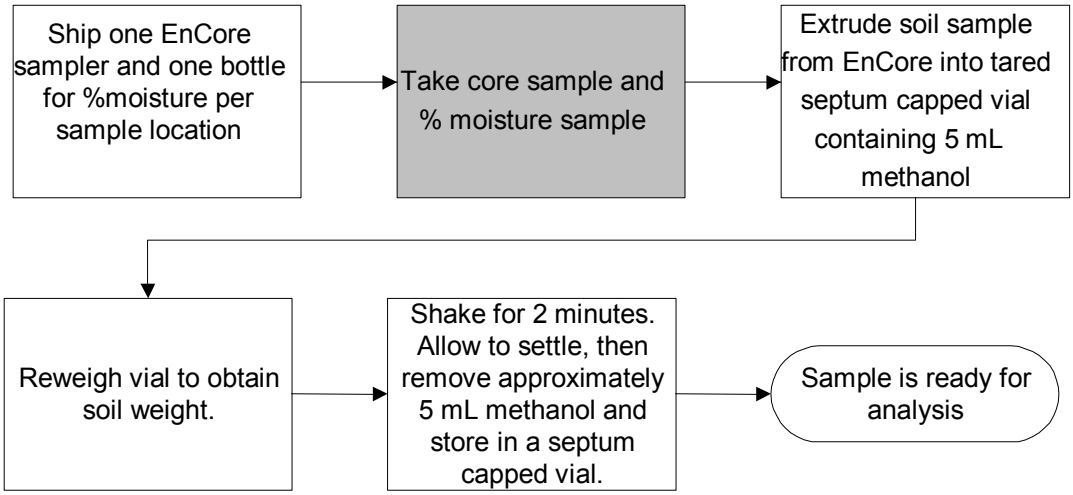

EnCore procedure when low level is required

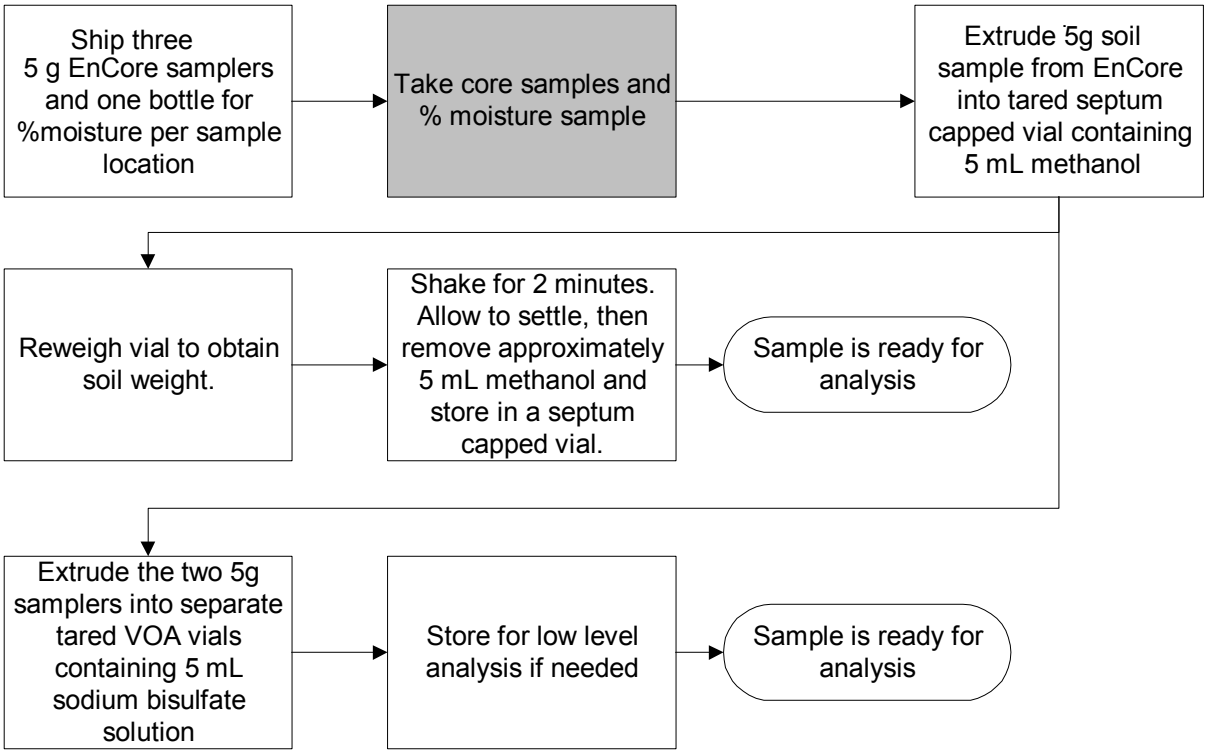

Field methanol extraction procedure (field steps in gray)

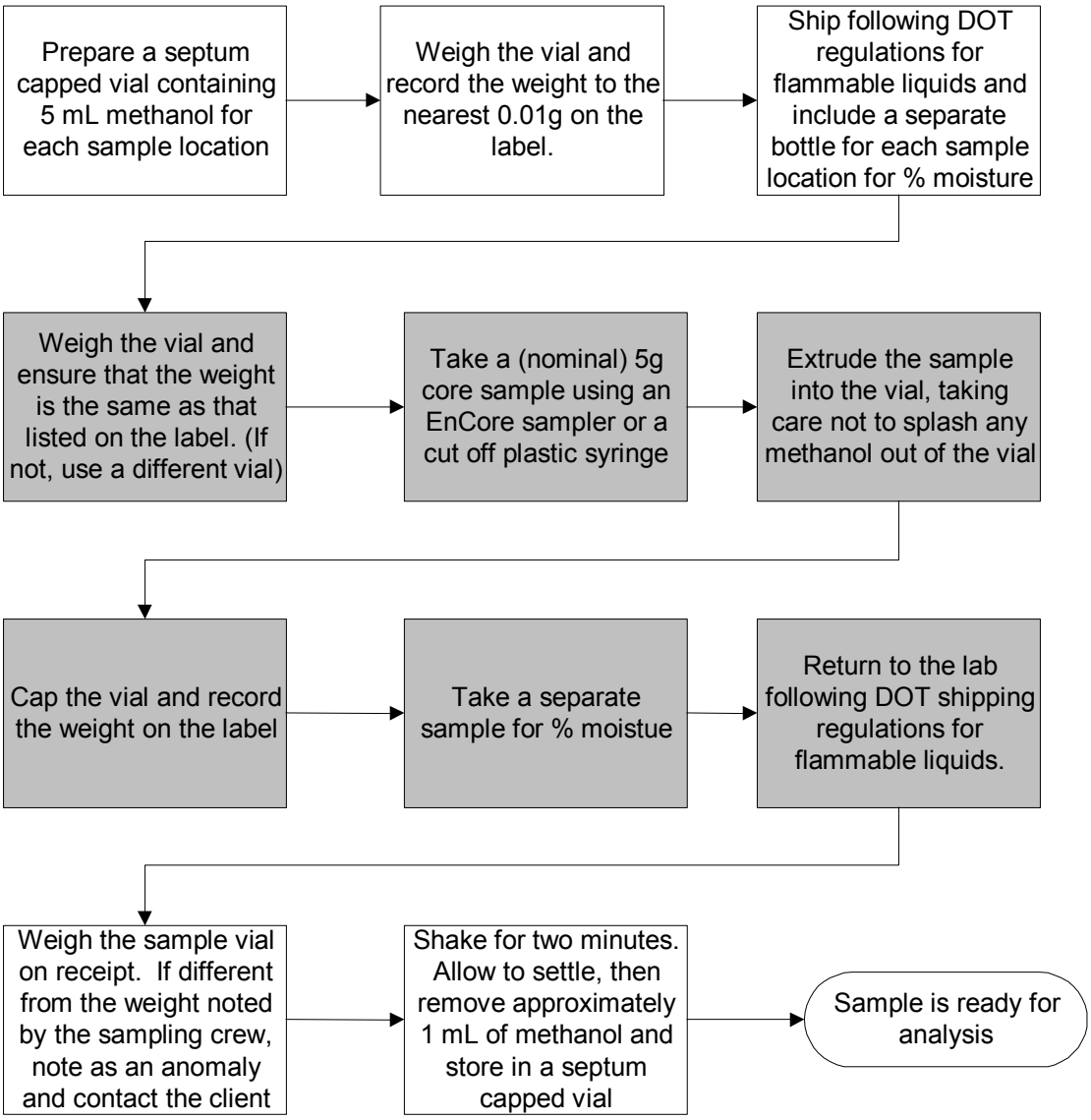

Field bisulfate preservation procedure (field steps in gray)

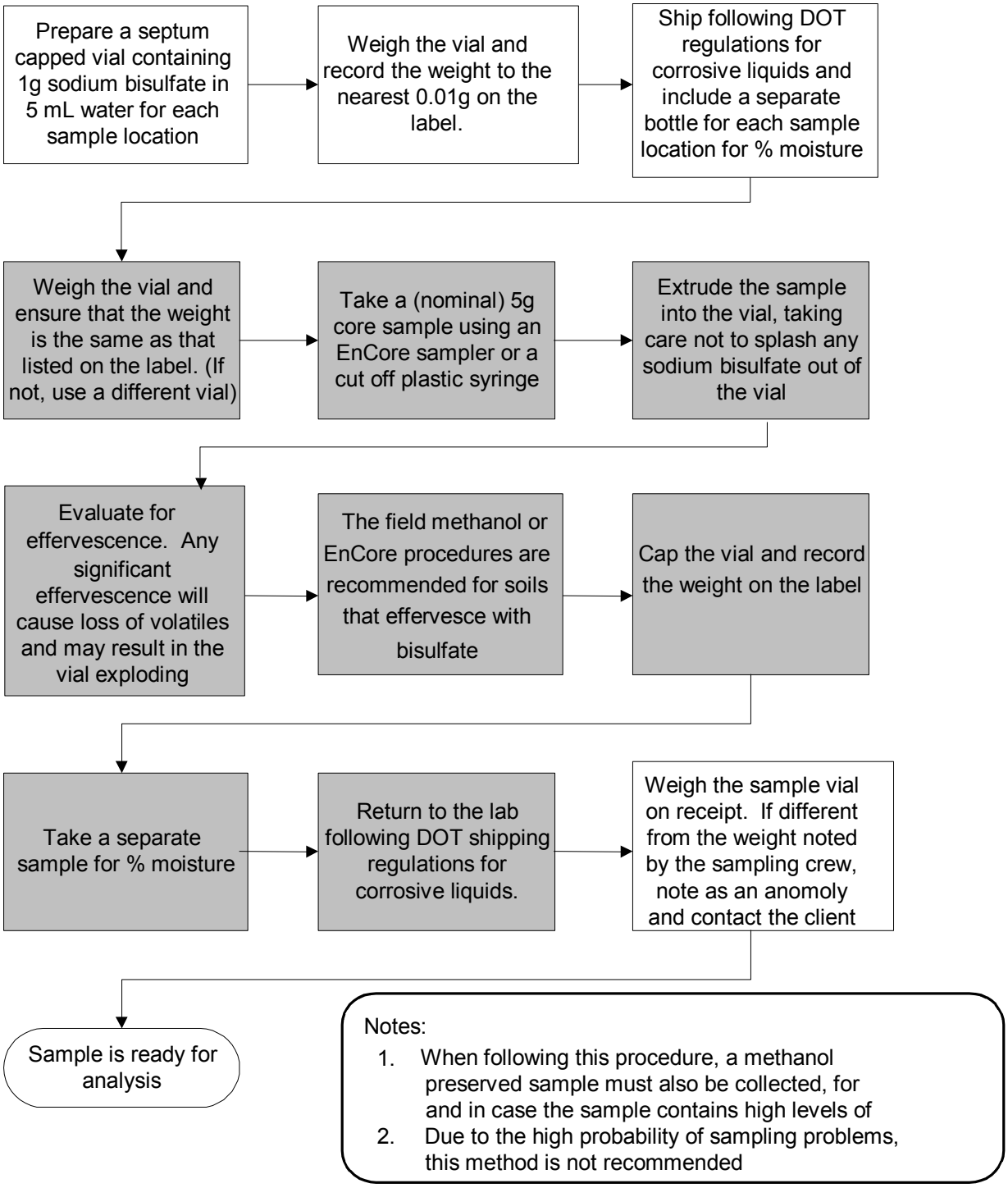

9. QUALITY CONTROL

9.1. Control Limits

9.1.1. Control limits are established by the laboratory as described in SOP NC-QA-018.

9.1.2. Laboratory control limits are internally generated and updated periodically unless method specified. Control limits are easily accessible via LIMs (QC Browser program).

9.2. Surrogates

9.2.1. Every sample, blank, and QC sample is spiked with surrogates. Surrogate recoveries in samples, blanks, and QC samples must be assessed to ensure that recoveries are within established limits. The compounds included in the surrogate spiking solutions are listed in Table 8. If any surrogates are outside limits, the following corrective actions must take place (except for dilutions):

- Check all calculations for error.
- Ensure instrument performance is acceptable.
- Recalculate the data and/or re-analyze if either of the above checks reveal a problem.
- Reprepare and re-analyze the sample if there is sufficient volume. If there is insufficient volume, the surrogate is narrated.

It is only necessary to reprepare/re-analyze a sample once to demonstrate that poor surrogate recovery is due to matrix effect, unless the analyst believes that the repeated out-of-control results are not due to matrix effect.

9.2.2. If the surrogates are out of control for the sample, matrix spike, and matrix spike duplicate, then matrix effect has been demonstrated for that sample and repreparation is not necessary. If the sample is out of control and the MS and/or MSD is in control, then re-analysis or flagging of the data is required. For Ohio VAP samples, all surrogates must be in control, or samples must be reprepared and re-analyzed.

9.2.3. For concrete matrix, Dibromofluoromethane may have poor recovery in samples and matrix spikes. If the surrogate does not meet criteria, no further action is required due to matrix.

9.2.4. Refer to the TestAmerica QC Program document (QA-003) for further details of

the corrective actions.

9.3. Method Blanks

9.3.1. For each batch of samples, analyze a method blank. The method blank is analyzed after the calibration standards, normally before any samples. For low-level volatiles, the method blank consists of reagent water. For medium-level volatiles, the method blank consists of the same volume of methanol that was used to prepare the samples. Surrogates are added and the method blank is carried through the entire analytical procedure. The method blank must not contain any analyte of interest at or above the reporting limit (except common laboratory contaminants, see below). The method blank is acceptable if any compound detected in the blank is present in the associated samples at ten times the blank level. For Ohio VAP work, there can be no target analyte greater than the RL in the method blank unless the sample result is ND. All samples associated with an unacceptable blank will be reprepared and re-analyzed.

- If the analyte is a common laboratory contaminant (methylene chloride, acetone, 2-butanone), the data may be reported with qualifiers if the concentration of the analyte is less than five times the reporting limit. Such action must be taken in consultation with the client.

- Re-analysis of samples associated with an unacceptable method blank is required when reportable concentrations are determined in the samples.

- If there is no target analyte greater than the RL in the samples associated with an unacceptable method blank, the data may be reported with qualifiers.

9.3.2. The method blank must have acceptable surrogate recoveries. If surrogate recoveries are not acceptable, the data must be evaluated to determine if the method blank has served the purpose of demonstrating that the analysis is free of contamination. If surrogate recoveries are low and there are reportable analytes in the associated samples, re-extraction of the blank and affected samples will normally be required. Consultation with the client must take place. For Ohio VAP samples, all surrogates must be in control, or repreparation of the batch is required.

9.3.3. If reanalysis of the batch is not possible due to limited sample volume or other constraints, the method blank is reported, all associated samples are flagged with a "B," and appropriate comments may be made in a narrative to provide further documentation.

9.3.4. Refer to the TestAmerica QC Program document, QA-003, for further details of the corrective actions.

9.3.5 Refer to SOP NC-QA-016 for further details concerning DoD Project Work.

9.4. Laboratory Control Samples (LCS)

9.4.1. For each batch of samples, analyze an LCS. The LCS is analyzed after the calibration standard, and normally before any samples. The LCS contains a representative subset of the analytes of interest (see Table 9), and must contain the same analytes as the matrix spike. If any analyte or surrogate is outside established control limits, the system is out of control and corrective action must occur. Corrective action will normally be repreparation and re-analysis of the batch. For Ohio VAP samples, all surrogates must be in control on the LCS, or repreparation and re-analysis of the batch is required.

- If the batch is not re-extracted and re-analyzed, the reasons for accepting the batch must be clearly presented in the project records and the report.
- If re-extraction and re-analysis of the batch is not possible due to limited sample volume or other constraints, the LCS is reported, all associated samples are flagged, and appropriate comments are made in a narrative to provide further documentation.

9.4.2. Refer to the TestAmerica QC Program document (QA-003) for further details of the corrective action.

9.4.3. If full analyte spike lists are used at client request, it will be necessary to allow a percentage of the components to be outside control limits as this would be expected statistically. These requirements must be negotiated with the client. n-Hexane must be spiked and reported for the LCS for Ohio VAP samples.

9.4.4. If full analyte spike lists are used at the client request, it is possible some compounds in the LCS may interfere with each other. In that case, the lab will quantitate those compounds in the LCS with a secondary ion which is free from interferences.

9.5. Matrix Spikes

9.5.1. For each QC batch, analyze a matrix spike and matrix spike duplicate. Spiking compounds and levels are given in Table 9. Compare the percent recovery and relative percent difference (RPD) to that in the laboratory-specific, historically-generated limits.

9.5.2. If any individual recovery or RPD falls outside the acceptable range, corrective action must occur. The initial corrective action will be to check the recovery of that analyte in the Laboratory Control Sample (LCS). Generally, if the recovery of the analyte in the LCS is within limits, then the laboratory operation is in control and analysis may proceed. The reasons for accepting the batch must be documented.

Company Confidential & Proprietary

- If the recovery for any component is outside QC limits for both the matrix spike/ spike duplicate and the LCS, the laboratory is out of control and corrective action must be taken. Corrective action will normally include re-analysis of the batch.

- If an MS/MSD is not possible due to limited sample, then an LCS duplicate must be analyzed. RPD of the LCS and LCSD is compared to the matrix spike limits.

- The matrix spike/duplicate must be analyzed at the same dilution as the unspiked sample, even if the matrix spike compounds will be diluted out.

9.6. Non-Conformance and Corrective Action

9.6.1. Any deviations from QC procedures must be documented as a non-conformance with applicable cause and corrective action approved by the facility QA Manager.

10. CALIBRATION AND STANDARDIZATION

10.1. Summary

10.1.1. Prior to the analysis of samples and blanks, each GC/MS system must be tuned and calibrated. Hardware tuning is checked through the analysis of the 4-Bromofluoro-benzene (BFB) to establish that a given GC/MS system meets the standard mass spectral abundance criteria. The GC/MS system must be calibrated initially at a minimum of five concentrations (analyzed under the same BFB tune), to determine the linearity of the response utilizing target calibration standards. Once the system has been calibrated, the calibration must be verified each twelve hour time period for each GC/MS system.

10.1.2. General

Electron Energy:	70 volts (nominal)
Mass Range:	35–300 AMU
Scan Time:	To give at least 5 scans/peak, but not to exceed 2 seconds/scan
Injector Temperature:	200–250°C
Source Temperature:	According to manufacturer's specifications
Transfer Line	Temperature: 250–300°C
Purge Flow:	40 mL/minute
Carrier Gas	Flow: 0.4 – 0.6 mL/minute

10.2 Gas chromatograph suggested temperature program

10.2.1 BFB Analysis

Initial Temperature:	100°C
Initial Hold Time:	0.1 minute
Temperature Program:	20°C/minute
Final Temperature:	200°C

10.2.2 Sample Analysis

Initial Temperature:	40°C
Initial Hold Time:	2minutes
Temperature Program:	15°C/minute
Final Temperature:	200°C
Final Hold Time:	3 minutes

10.3. Instrument Tuning

10.3.1. Each GC/MS system must be hardware-tuned to meet the abundance criteria listed in Table 10 for a maximum of a 50 ng injection or purging of BFB. Analysis must not begin until these criteria are met. These criteria must be met for each 12-hour time period. The 12-hour time period begins at the moment of injection of BFB.

10.4. Initial Calibration

10.4.1. A series of at least five initial calibration standards is prepared and analyzed for the target compounds and each surrogate compound. Six standards must be used for a quadratic least squares calibration. Suggested calibration levels for a 5 mL purge are: 5, 20, 50, 100, and 200 µg/L. Certain analytes are prepared at higher concentrations due to poor purge performance. Suggested calibration levels for a low level 5mL purge are 1, 5, 10, 20, and 40 µg/L. Again, some analytes are prepared at higher levels. Tables 2, 2A, and 4 list the calibration levels for each analyte. Other calibration levels and purge volumes may be used depending on the capabilities of the specific instrument. (For example, adequate sensitivity can be obtained by using a 5 mL purge volume to reach the same reporting limits that once required a 25 mL purge. The calibration levels will still be the same 1, 5, 10, 20, 40 µg/L.) However, the same purge volume must be used for calibration and sample analysis, and the low level standard must be at or below the reporting limit.

10.4.2. It may be necessary to analyze more than one set of calibration standards to encompass all of the analytes required for same tests. For example, the Appendix IX list requires the Primary standard (Table 5) and the Appendix IX standard (Table 6).

10.4.3. Internal standard calibration is used. The internal standards are listed in Table 7. Target compounds must reference the nearest internal standard. Each calibration standard is analyzed and the response factor (RF) for each compound is calculated using the area response of the characteristic ions against the concentration for each

compound and internal standard. See Table 13 for a list of characteristic ions. See Equation 1, Section 12, for calculation of response factor.

10.4.4. The % RSD of the calibration check compounds (CCC) must be less than 30%. Refer to Table 12 for the CCCs. This criteria must be met before sample analysis begins.

10.4.5. The average RF must be calculated for each compound. A system performance check is made prior to using the calibration curve. The five system performance check compounds (SPCC) are checked for a minimum average response factor. Refer to Table 11 for the SPCC compounds and required minimum response factors.

10.4.6. Weighting of data points

10.4.6.1. In a linear or quadratic calibration fit, the points at the lower end of the calibration curve have less weight in determining the curve generated than points at the high concentration end of the curve. However, in environmental analysis, accuracy at the low end of the curve is very important. For this reason, it is preferable to increase the weighting of the lower concentration points. 1/Concentration^2 weighting (often called $1/X^2$ weighting) will improve accuracy at the low end of the curve and must be used if the data system has this capability. The Y-intercept is evaluated to determine calibration acceptability.

10.4.7. For any analyte with % RSD >15%, linear or quadratic curve fits may be used if the compounds have historically exhibited a non-linear response. The analyst must consider instrument maintenance to improve the linearity of response. If the % RSD is > 15%, the analyst may drop the low or high in the ICAL , as long as a minimum of five points are maintained (six points for quadratic) and the quantitation range is adjusted accordingly. Otherwise, the coefficient of determination r^2 must be $\geq$ 0.990.

10.4.8. If time remains in the 12-hour period initiated by the BFB injection before the initial calibration, samples may be analyzed. Otherwise, proceed to continuing calibration.

10.4.9. The calibration standards for the initial five-point calibration for low-level soils that are not preserved in sodium bisulfate (i.e., are preserved by freezing or not preserved) must be heated to 40°C for purging. Using this calibration curve for water samples is acceptable as long as all calibration, QC, and samples are also heated to 40°C. A separate five-point calibration must be prepared for analysis of low level soils that are preserved with sodium bisulfate. Low-level soils analysis requires the use of a closed vial autosampler such as the Varian Archon, O.I. 4552 or Tekmar Precept. Each standard for analysis of sodium bisulfate preserved

samples is prepared by spiking the methanolic standard solution through the septum of a VOA vial containing 5 mL of water and 1g sodium bisulfate. The standards are heated to 40°C for purging. All low-level soil samples, standards, and blanks must also be heated to 40°C for purging.

10.4.10. Non-standard analytes are sometimes requested. For these analytes, it is acceptable to analyze a single standard at the reporting limit with each continuing calibration rather than a five-point initial calibration. If the analyte is detected in any of the samples, a five-point initial calibration must be generated and the sample(s) re-analyzed for quantitation. However, if the analyte is not detected, the non-detect must be reported and no further action is necessary.

Note: This procedure must not be used for Ohio VAP samples.

10.4.11. Calibration accuracy is verified by analyzing a second source standard (ICV) immediately after the initial calibration. The recovery for CCC compounds must be ≤ 20%. The recovery for non-CCC compounds must be ≤ 50% with an allowance of up to six compounds > 50%.

10.5. Continuing Calibration: The initial calibration must be verified every 12 hours.

10.5.1. Continuing calibration begins with analysis of BFB as described in Section 10.3. If the system tune is acceptable, the continuing calibration standard(s) are analyzed. A midpoint calibration standard is used as the continuing calibration.

10.5.2. The RF data from the standards are compared with the average RF from the initial five-point calibration to determine the percent drift of the CCC compounds. The calculation is given in Equation 4, Section 12.3.4.

10.5.3. The % drift of the CCCs must be ≤ 20% for the continuing calibration to be valid. The SPCCs are also monitored. The SPCCs must meet the criteria described in Table 11. In addition, the percent drift of all analytes must be ≤ 50% with allowance for up to six target analytes to have percent drift > 50%.

10.5.3.1. Refer to Table 12 for specific Ohio VAP analytes.

10.5.4. If the CCCs and/or the SPCCs do not meet the criteria in Section 10.5.3 and Table 11, the system must be evaluated and corrective action must be taken. The BFB tune and continuing calibration must be acceptable before analysis begins. Extensive corrective action such as a different type of column will require a new initial calibration.

10.5.5. Once the above criteria have been met, sample analysis may begin. **Initial calibration average RFs (or the calibration curve) will be used for sample**

quantitation, not the continuing calibration RFs. Analysis may proceed until 12 hours from the injection of the BFB have passed. (A sample *desorbed* less than or equal to 12 hours after the BFB is acceptable.)

11. PROCEDURE

11.1. Procedural Variations

11.1.1. One time procedural variations are allowed only if deemed necessary in the professional judgment of supervision to accommodate variation in sample matrix, , chemistry, sample size, or other parameters. Any variation must be completely documented using a Non-Conformance Memo and approved by a Supervisor or Group Leader and QA Manager. The Non-Conformance Memo must be filed in the project file.

11.1.2. Any unauthorized deviations from this procedure must also be documented as a non-conformance with a cause and corrective action described. The laboratory may not deviate from the method for Ohio VAP samples.

11.2. Preliminary Evaluation

11.2.1. Where possible, samples are screened by headspace or GC/MS off-tune analysis to determine the correct aliquot for analysis. Alternatively, an appropriate aliquot can be determined from sample histories.

11.3. Sample Analysis Procedure

11.3.1. All analysis conditions for samples must be the same as for the continuing calibration standards (including purge time and flow, desorb time and temperature, column temperatures, multiplier setting etc.).

11.3.2. All samples must be analyzed as part of a batch. The batch is a set of up to 20 samples of the same matrix processed using the same procedures and reagents within the same time period. The batch also must contain an MS/MSD, an LCS, and a method blank.

11.3.2.1. If there is insufficient time in the 12-hour tune period to analyze 20 samples, the batch may be continued into the next tune period. However, if any re-tuning of the instrument is necessary, or if a period of greater than 24 hours from the preceding BFB tune has passed, a new batch must be started. For medium-level soils, the batch is defined at the sample preparation stage.

11.3.2.2. It is not necessary to re-analyze batch QC with re-analyses of samples. However, any reruns must be part of a valid batch.

Company Confidential & Proprietary

11.3.3 Dilutions must be done just prior to the GC/MS analysis of the sample. Dilutions are made in a Luerlok syringe. Calculate the volume of reagent water required for the dilution. Fill the syringe with reagent water, compress the water to vent any residual air and adjust the water volume to the desired amount. Adjust the plunger to the mark and inject the proper aliquot of sample into the syringe. If the dilution required would use less than 1 µL of sample, then serial dilutions must be made in volumetric flasks. Dilutions may also be prepared in a 40 mL vial. An appropriate amount of water is added to the vial. The sample is added using an appropriate syringe.

11.3.3.1 The diluted concentration is to be estimated to be in the upper half of the calibration range.

11.4. Methanol Extract Soils

11.4.1 Rinse a gas-tight syringe with organic free water. Fill the syringe with the same volume of organic free water as used in the calibrations. Add no more than 2% (v/v) (100 µL for a 5 mL purge) methanolic extract (from Sections 8.5 or 8.6) to the syringe. If less than 1µL of methanolic extract is to be added to the water, dilute the methanolic extract such that a volume greater than 1µL will be added to the water in the syringe. Refer to Section 17.2 for Michigan project requirements.

11.5. Liquid wastes that are soluble in methanol and insoluble in water.

11.5.1 Pipette 1 mL of the sample into a tared vial. Use a top-loading balance. Record the weight to the nearest 0.1g.

11.5.2 Quickly add 4 mL of methanol, then add 5µL of a 2500 µg/mL surrogate spiking solution to bring the final volume to 5 mL. Cap the vial and shake for two minutes to mix thoroughly. For an MS/MSD or LCS, 4.9 mL of methanol, 5µL of a 2500 µg/mL surrogate spiking solution, and 0.1 mL of matrix spike solution is used.

11.5.3 Rinse a gas-tight syringe with organic-free water. Fill the syringe with the same volume of organic free water as used in the calibrations. Add no more than 2% (v/v) (100 µL for a 5 mL purge) methanolic extract (from Sections 8.5 or 8.6) to the syringe. If less than 5µL of methanolic extract is to be added to the water, dilute the methanolic extract such that a volume greater than 1µL will be added to the water in the syringe.

11.6. Aqueous and low-level soil sample analysis (Purge and Trap units that sample directly from the VOA vial)

11.6.1 Units which sample from the VOA vial must be equipped with a module which automatically adds surrogate and internal standard solution to the sample prior to

purging the sample.

11.6.2 If the autosampler uses automatic IS/SS injection, no further preparation of the VOA vial is needed. Otherwise, the internal and surrogate standards must be added to the vial. *Note:* Aqueous samples with high amounts of sediment present in the vial may not be suitable for analysis on this instrumentation, or they may need to be analyzed as soils.

11.6.3 Soil samples, which are preserved with sodium bisulfate, must be quantitated against a curve prepared with standards containing about the same amount of sodium bisulfate as the samples (1g in 5 mL).

11.6.4 Soil samples, which are preserved by freezing, must be allowed to thaw completely before sample analysis begins.

11.6.5 Sample remaining in the vial after sampling with one of these mechanisms is no longer valid for further analysis. A fresh VOA vial must be used for further sample analysis.

11.7 Water Samples Not Directly Sampled from VOA Vials

11.7.1. All samples and standard solutions must be at ambient temperature before analysis.

11.7.2. Fill a syringe with the sample. If a dilution is necessary it may be made in the syringe if the sample aliquot is $\geq$ 5 µL. Check and document the pH of the remaining sample.

11.7.3. Add 50 ng of each internal and surrogate standard. The internal standards and the surrogate standards may be mixed and added as one spiking solution (this results in a 10 µg/L solution for a 5 mL sample). Inject the sample into the purging chamber. The internal and surrogate standards can be added automatically by the autosampler.

11.7.3.1. For TCLP samples, use 1 mL of TCLP leachate with 4 mL reagent water. (Note: TCLP reporting limits will be five times higher than the corresponding aqueous limits.)

11.7.4. Purge the sample for 11 minutes (trap must be below 35°C).

11.7.5. After purging is complete, desorb the sample, start the GC temperature program, and begin data acquisition. After desorption, bake the trap for approximately 3-10 minutes to condition it for the next analysis. When the trap is cool, it is ready for the next sample.

11.7.6. Desorb and bake time and temperature are optimized for the type of trap in use. The

same conditions must be used for samples and standards.

11.8. Low-Level Solids Analysis using discrete autosamplers, Methods 8260A and 5030A

Note: This technique may seriously underestimate analyte concentration and must not be used except at specific client request for the purpose of comparability with previous data. It is no longer part of SW-846.

This method is based on purging a heated soil/sediment sample mixed with reagent water containing the surrogates and internal standards. Analyze all reagent blanks and standards under the same conditions as the samples (e.g., heated). The calibration curve is also heated during analysis. Purge temperature is 40°C.

11.8.1. Do not discard any supernatant liquids. Mix the contents of the container with a narrow metal spatula.

11.8.2. Weigh out 5g (or other appropriate aliquot) of sample into a 40 mL vial. Record the weight to the nearest 0.1g. If method sensitivity is demonstrated, a smaller aliquot may be used. Do not use aliquots less than 0.5g. If the sample is contaminated with analytes such that a purge amount less than 0.5g is appropriate, use the medium level method. For the medium level method, add 5g soil to 5 mL methanol containing the surrogates, mix for two minutes, allow to settle, then remove a portion of the methanol, and store in a clean Teflon®-capped vial at 4°C until analysis. Analyze as described in Section 11.5.

11.8.3. Add 5 mL of organic free water to the VOA vial. Add surrogate/internal standard (and matrix spike solutions if required.). Add directly to the sample from Section 11.5.1.

11.8.4. *The above steps must be performed rapidly and without interruption to avoid loss of volatile organics.*

11.9 Medium-Level Soil/Sediment and Waste Samples

11.9.1. Sediments/soils and waste that are insoluble in methanol.

11.9.1.1 Weigh 5 g (wet weight) into a tared vial. Use a top-loading balance. Record the weight to 0.1 gram. Do not discard any supernatant liquids.

11.9.1.2 Quickly add 5 mL of methanol, and 5µL of 2500 µg/mL surrogate spiking solution to bring the final volume of methanol to 5 mL. For an LCS or MS/MSD sample, add 4.9 mL of methanol, 5µL of surrogate spike solution, and 0.1 mL of matrix spike solution. Cap the vial and shake or vortex to mix thoroughly.

Company Confidential & Proprietary

Note: Sections 11.9.1.1 and 11.9.1.2 must be performed rapidly and without interruption to avoid the loss of volatile organics.

11.10. Initial review and corrective actions

11.10.1. If the retention time for any internal standard in the continuing calibration changes by more than 0.5 minutes from the mid-level initial calibration standard, the chromatographic system must be inspected for malfunctions and corrected. Re-analysis of samples analyzed while the system was malfunctioning is required.

11.10.2. If the internal standard response in the continuing calibration is more than 200% or less than 50% of the response in the mid-level of the initial calibration standard, the chromatographic system must be inspected for malfunctions and corrected. Re-analysis of samples analyzed while the system was malfunctioning is required. Re-analysis must be undiluted if matrix interference is not observed.

11.10.2.1. Any samples that do not meet the internal standard criteria for the continuing calibration must be evaluated for validity. If the change in sensitivity is a matrix effect, the sample is re-analyzed to confirm. If the change in sensitivity is due to instrumental problems, all affected samples must be re-analyzed after the problem is corrected. For Ohio VAP projects, the laboratory will re-analyze any sample where the internal standard fails, and there is no evidence of matrix interference. If there is no matrix interference, the sample must be reanalyzed at the original dilution. If the internal standard is within criteria, report the second analysis. If the internal standard is still outside of criteria, the sample must be analyzed at a second dilution. If the internal standard still does not meet criteria, the sample must be diluted until the internal standard meets criteria. Multiple runs may be required..

11.11. Dilutions

11.11.1 If the response for any compound exceeds the working range of the GC/MS system, a dilution of the extract is prepared and analyzed. An appropriate dilution must be in the upper half of the calibration range. Samples may be screened to determine the appropriate dilution for the initial run. If the initial diluted run has no hits or hits below 20% of the calibration range and the matrix allows for analysis at a lesser dilution, then the sample must be re-analyzed at a dilution targeted to bring the largest hit above 50% of the calibration range.

11.11.2 Guidance for Dilutions Due to Matrix

11.11.2.1 If the sample is initially run at a dilution and the baseline rise is less

than half the height of the internal standards, or if individual non target peaks are less than twice the height of the internal standards, then the sample must be re-analyzed at a more concentrated dilution. This requirement is approximate and subject to analyst judgement.

11.11.3 Reporting Dilutions

11.11.3.1 The most concentrated dilution with no target compounds above the calibration range will be reported. Other dilutions will only be reported at client request.

12. DATA ANALYSIS AND CALCULATIONS

12.1. Qualitative identification

12.1.1 An analyte is identified by retention time and by comparison of the sample mass spectrum with the mass spectrum of a standard of the suspected compound (standard reference spectrum). Mass spectra for standard reference may be obtained on the user's GC/MS by analysis of the calibration standards or from the NIST Library. Two criteria must be satisfied to verify identification: (1) elution of sample component at the same GC retention time as the standard component, and (2) correspondence of the sample component and the standard component characteristic ions. See Table 13 for a list of the characteristic ions. (Note: Care must be taken to ensure that spectral distortion due to coelution is evaluated.)

- The sample component retention time must compare to within ± 0.2 min. of the retention time of the standard component. For reference, the standard must be run within the same 12 hours as the sample.

- The relative intensities of ions must agree to within ±30% between the standard and sample spectra. (Example: For an ion with an abundance of 50% in the standard spectra, the corresponding sample abundance must be between 20 and 80 percent.)

12.1.2 If a compound cannot be verified by all the above criteria, but in the technical judgment of the analyst, the identification is correct, then the analyst must report that identification and proceed with quantitation.

12.2. Tentatively Identified Compounds (TICs)

12.2.1. If the client requests components not associated with the calibration standards, a search of the NIST library may be made for the purpose of tentative identification. Guidelines are:

12.2.1.1. Relative intensities of major ions in the reference spectrum (ions > 10% of

the most abundant ion) must be present in the sample spectrum.

12.2.1.2. The relative intensities of the major ions must agree to within 20%. (Example: If an ion shows an abundance of 50% in the standard spectrum, the corresponding sample ion abundance must be between 30% and 70%).

12.2.1.3. Molecular ions present in the reference spectrum must be present in the sample spectrum.

12.2.1.4. Ions present in the sample spectrum but not in the reference spectrum must be reviewed for possible background contamination or presence of coeluting compounds.

12.2.1.5. Ions present in the reference spectrum but not in the sample spectrum must be reviewed for possible subtraction from the spectrum because of background contamination or coeluting peaks. (Data system reduction programs can sometimes create these discrepancies.)

12.2.1.6. Computer-generated library search routines must not use normalization routines that would misrepresent the library or unknown spectra when compared to each other. Only after visual inspection of the sample with the nearest library searches must the analyst assign a tentative identification.

12.3. Calculations

12.3.1. Response factor (RF)

Equation 1

$$RF = \frac{A_x C_{is}}{A_{is} C_x}$$

Where:

A_x = Area of the characteristic ion for the compound to be measured

A_{is} = Area of the characteristic ion for the specific internal standard

C_{is} = Concentration of the specific internal standard, ng

C_x = Concentration of the compound being measured, ng

12.3.2. Standard deviation (SD)

Equation 2

$$SD = \sqrt{\sum_{i=1}^{N} \frac{(Xi - X)^2}{N - 1}}$$

Where:

X_i = Value of X at i through N

N = Number of points

X = Average value of X_I

12.3.3. Percent relative standard deviation (%RSD):

Equation 3

$$\%RSD = \frac{\textbf{Standard Deviation}}{\overline{RF_i}} \times 100$$

$\overline{RF_i}$ **= Mean of RF values in the curve**

12.3.4. Percent drift between the initial calibration and the continuing calibration:

Equation 4

$$\%\ \text{Drift} = \frac{C_{expecte} - C_{found}}{C_{expecte}} \times 100$$

Where:

$C_{expecte}$ = Known concentration in standard

C_{found} = Measured concentration using selected quantitation method

12.3.5. Target compound and surrogate concentrations:

12.3.5.1 Concentrations in the sample may be determined from linear or second order (quadratic) curve fitted to the initial calibration points, or from the average response factor of the initial calibration points. Average response factor may only be used when the % RSD of the response factors in the initial calibration is $\leq$ 15%.

12.3.5.2 Calculation of concentration using Average Response Factors:

Equation 5

$$\textbf{Concentration } \mu\text{g / L} = \frac{x}{RF}$$

12.3.5.3 Calculation of concentration using Linear fit:

Equation 6

$$\textbf{Concentration } \mu\text{g / L} = A + Bx$$

12.3.5.4. Calculation of concentration using Quadratic fit:

Equation 7

$$\textbf{Concentration } \mu\text{g / L} = A + Bx + Cx^2$$

Where,

x is defined in Equations 8, 9, and 10

A is a constant defined by the intercept

B is the slope of the curve

C is the curvature

12.3.5.5. Calculation of x for Water and water-miscible waste:

Equation 8

$$x = \frac{(A_x)(I_s)(D_f)}{(A_{is})(V_o)}$$

Where:

X = ug/L

$\mathbf{A_x}$ = Area of characteristic ion for the compound being measured (secondary ion quantitation is allowed only when there are sample interferences with the primary ion)

$\mathbf{A_{is}}$ = Area of the characteristic ion for the internal standard

$\mathbf{I_s}$ = Amount of internal standard added in ng

$$\text{Dilution Factor} = D_f = \frac{\text{Total volume purged (mL)}}{\text{Volume of original sample used (mL)}}$$

$\mathbf{V_o}$ = Volume of water purged, mL

12.3.5.6. Calculation of ***x*** for Medium level soils:

Equation 9

$$x = \frac{(A_x)(I_s)(V_t)(1000)(D_f)}{(A_{is})(V_a)(W_s)(D)}$$

Where:

X = ug/kg

$\mathbf{A_x}$, $\mathbf{I_s}$, $\mathbf{D_f}$, $\mathbf{A_{is}}$, same as for water.

$\mathbf{V_t}$ = Volume of total extract, mL

$\mathbf{V_a}$ = Volume of extract added for purging, µL

$\mathbf{W_s}$ = Weight of sample extracted, g

$$\mathbf{D} = \frac{100 - \%\text{moisture}}{100}$$

12.3.5.7. Calculation of ***x*** for Low level soils:

Equation 10

$$x = \frac{(A_x)(I_s)}{(A_{is})(W_s)(D)}$$

Where:

X = ug/kg

$\mathbf{A_x}$, $\mathbf{I_s}$, $\mathbf{A_{is}}$, same as for water.

D is as for medium level soils

$\mathbf{W_s}$ = Weight of sample added to the purge vessel, g

12.3.5.8. Calculation of TICs: The calculation of TICs (tentatively identified compounds) is identical to the above calculations with the following exceptions:

$\mathbf{A_x}$ = Area in the total ion chromatogram for the compound being measured

$\mathbf{A_{is}}$ = Area of the total ion chromatogram for the nearest internal standard without interference

RF = 1

In other words, the concentration is equal to ***x*** as defined in Equations 8, 9, and 10.

12.3.6. MS/MSD Recovery

Equation 11

Matrix Spike y, % = $\frac{SSR - SR}{SA} \times 100$

Where,

SSR = Spike ple result

SR = Sample sult

SA = Spike ed

12.3.7. Relative % Difference calculation for the MS/MSD:

Equation 12

$$\mathbf{RPD} = \frac{|\mathbf{MSR - MSDR}|}{\frac{1}{2}(\mathbf{MSR + MSDR})} \times 100$$

Where:

RPD = Relative percent difference

MSR = Matrix spike result

MSDR = Matrix spike duplicate result

12.4 Additional equations and calculations are listed in the following SOPs: Calibration Curves (General), CA-Q-S-005, and Selection of Calibration Points, CA-T-P-002.

13. METHOD PERFORMANCE

13.1. Method Detection Limit

13.1.1. Generally, each laboratory must generate a valid method detection limit for each analyte of interest. The MDL must be below the reporting limit for each analyte. The procedure for determination of the method detection limit is given in 40 CFR Part 136, Appendix B, and further defined in QA Policy CA-Q-S-006 and SOP NC-QA-021. When non-standard compounds are analyzed at client request, lesser requirements are possible with client agreement. At a minimum, a standard at the reporting limit must be analyzed to demonstrate the capability of the method. The non-standard compound must be detected in the reporting limit standard to be acceptable.

Company Confidential & Proprietary

13.1.2. For non-standard analytes, a MDL study must be performed and calibration curve generated before analyzing any samples, unless lesser requirements are previously agreed to with the client. In any event, the minimum initial demonstration required is analysis of a standard at the reporting limit and a single point calibration.

13.2. Initial Demonstration

13.2.1. Each laboratory must have initial demonstration of performance data on file and corresponding method detection limit files.

13.3. Training Qualification

13.3.1. The Group/Team Leader has the responsibility to ensure that this procedure is performed by an analyst who has been properly trained in its use and has the required experience.

13.3.2. Method validation information (where applicable) in the form of laboratory demonstrations of capabilities is maintained for this method in the laboratory QA files.

14. POLLUTION PREVENTION

14.1. It is TestAmerica's policy to evaluate each method and look for opportunities to minimize waste generated (i.e., examine recycling options, ordering chemicals based on quantity needed, preparation of reagents based on anticipated usage, and reagent stability). Employees must abide by the policies in Section 13 of the Corporate Environmental Health and Safety Manual (CW-E-M-001) for "Waste Management and Pollution Prevention".

15. WASTE MANAGEMENT

15.1. Laboratory personnel assigned to perform hazardous waste disposal procedures must have a working knowledge of the established procedures and practices of TestAmerica. They must have training on the hazardous waste disposal practices upon initial assignment to these tasks, followed by an annual refresher training.

15.2. All waste will be disposed of in accordance with Federal, State, and Local regulations. Where reasonably feasible, technological changes have been implemented to minimize the potential for pollution of the environment. Employees will abide by this method and the policies in Section 13 of the Corporate Environmental Health and Safety Manual (CW-E-M-001) for "Waste Management and Pollution Prevention".

15.3. The following waste streams are produced when this method is carried out.

15.3.1. **Acidic material from the auto-sampler**: Waste stream must be collected and

neutralized before discharge to a sewer system if the pH is less than 5.

15.3.2. **Methanol waste from rinses and standards:** Methanol waste is discarded as a flammable liquid in a solvent waste container identified as "Flammable Liquid Waste".

15.3.3. **All samples including purged and extracted soils and waters:** Samples are collected in boxes and removed from the lab to storage. The Waste Coordinator handles crushing the vials and proper disposal.

15.3.4. **Solid samples -** Stirbars are removed from the sample. The contents of the vial are poured into a beaker, and the soil allowed to settle out. The soil is disposed of in the solid waste container.

16. REFERENCES

16.1. References

16.1.1. SW846, *Test Methods for Evaluating Solid Waste,* Third Edition, Gas Chromatography/Mass Spectrometry for Volatile Organics, Method 8260B, Update III, December 1996

16.1.2. SW846, *Test Methods for Evaluating Solid Waste,* Third Edition, Gas Chromatography/Mass Spectrometry for Volatile Organics, Method 8260A, Update II, September 1994

16.1.3. SW846, *Test Methods for Evaluating Solid Waste,* Third Edition, Purge-and-Trap for Aqueous Samples, Method 5030B, Rev 2, December 1996

16.1.4. SW846, *Test Methods for Evaluating Solid Waste,* Third Edition, Purge-and-Trap for Aqueous Samples, Method 5030A, Rev 1, July 1992

16.1.5. SW846, *Test Methods for Evaluating Solid Waste,* Third Edition, Closed System Purge-and-Trap and Extraction for Volatile Organics in Soil and Waste Samples, Method 5035, Rev 0, December 1996

16.1.6 SW846, Test Methods for Evaluating Solid Waste Closed System Purge-and-Trap and Extraction for Volatile Organics in Soil and Waste Samples, Method 5035A, Draft Revision 1, July 2002

16.1.7 TestAmerica North Canton Quality Assurance Manual (QAM), current version

16.1.8 TestAmerica Corporate Environmental Health and Safety Manual, CW-E-M-001, and TestAmerica North Canton Facility Addendum and Contingency Plan, current version

16.2. Associated SOPs and Policies, latest version

16.2.1. QA Policy, QA-003

16.2.2. Glassware Washing, NC-QA-014

16.2.3. Statistical Evaluation of Data and Development of Control Charts, NC-QA-018

16.2.4. Method Detection Limits and Instrument Detection Limits, CA-Q-S-006 and NC-QA-021

16.2.5. Supplemental Practices for DoD Project Work, NC-QA-016

16.2.6. Standards and Reagents, NC-QA-017

16.2.7. Laboratory Holding Blanks, NC-QA-020

16.2.8. Selection of Calibration Points, CA-T-P-002

16.2.9. Calibration Curves (General), CA-Q-S-005

16.2.10. Acceptable Manual Integration Practices, CA-Q-S-002

16.2.11. Revision History

Historical File:		Revision 2.0: 12/15/97		Revision 2.4: 09/27/04
(formerly CORP-MS-0002NC)		Revision 2.1: 03/06/00		Revision 2.5: 04/03/07
		Revision 2.2: 11/28/00		Revision 0: 06/30/08 (NC-MS-019)
		Revision 2.3: 05/23/01		

17. MISCELLANEOUS

17.1. Modifications from the reference method

17.1.1. A retention time window of 0.2 minutes is used for all components, since some data systems do not have the capability of using the relative retention time units specified in the reference method.

17.1.2. The quantitation and qualifier ions for some compounds have been changed from those recommended in SW846 in order to improve the reliability of qualitative identification.

17.2 The following are protocols that must be followed to achieve the lower reporting limits required when analyzing Michigan projects.

17.2.1 Modify Sections 8.5.4 and 8.6.8 (add 5 uL of 2500 ug/mL surrogate solution for a nominal 10g sample).

17.2.2 Modify Sections 8.5.5 and 8.6.9 (add 100 uL of 50 ug/mL spike solution for a nominal 10g sample).

17.2.3 Modify Sections 8.5.6 and 8.6.10 (add 100 uL of 50 ug/mL spike solution for a nominal 10g sample).

17.2.4 Michigan reporting limits for methanol preserved soils are achieved by injecting 100 uL of the methanol extract in a 5 mL purge. The instrument is calibrated using the recommended calibration range for water of 0.5 ug/L to 100 ug/L. Some analytes are prepared at higher concentrations.

Company Confidential & Proprietary

Table 1 - TestAmerica Primary Standard and Reporting Limits

Compound	CAS Number	Reporting Limits[1]				
		5 mL Water µg/L	Low Level 5 mL water µg/L	Low soil µg/kg	8260B/ 5035 Soil ug/kg	8260A 5030A Med Level Soil µg/kg
Dichlorodifluoromethane	75-71-8	5	1	5	250	250
Chloromethane	74-87-3	5	1	5	250	250
Bromomethane	74-83-9	5	1	5	250	250
Vinyl chloride	75-01-4	5	1	5	250	250
Chloroethane	75-00-3	5	1	5	250	250
Trichlorofluoromethane	75-69-4	5	1	5	250	250
Acrolein	107-02-8	100	20	100	5,000	5,000
Acetone	67-64-1	20	10	20	1,000	1,000
Trichlorotrifluoroethane	76-13-1	5	1	5	250	250
Iodomethane	74-88-4	5	1	5	250	250
Carbon disulfide	75-15-0	5	1	5	250	250
Methylene chloride	75-09-2	5	1	5	250	250
tert-Butyl alcohol	75-65-0	200	50	200	10,000	10,000
1,1-Dichloroethene	75-35-4	5	1	5	250	250
1,1-Dichloroethane	75-34-3	5	1	5	250	250
Trans-1,2-Dichloroethene	156-60-5	5.0	1.0	5.0	250	250
Acrylonitrile	107-13-1	100	20	100	5,000	5,000
Methyl *tert*-butyl ether (MTBE)	1634-04-4	20	5	20	1,000	1,000
Hexane	110-54-3	5	1	5	250	250
cis-1,2-Dichloroethene	156-59-2	5	1	5	250	250
1,2-Dichloroethene (Total)	540-59-0	10	2	10	500	500
Tetrahydrofuran	109-99-9	20	5	20	1,000	1,000
Chloroform	67-66-3	5	1	5	250	250
1,2-Dichloroethane	107-06-2	5	1	5	250	250
Dibromomethane	74-95-3	5	1	5	250	250
2-Butanone	78-93-3	20	5	20	1,000	1,000
1,4-Dioxane	123-91-1	500	200	500	25,000	25,000
1,1,1-Trichloroethane	71-55-6	5	1	5	250	250
Carbon tetrachloride	56-23-5	5	1	5	250	250
Bromodichloromethane	75-27-4	5	1	5	250	250
1,2-Dichloropropane	78-87-5	5	1	5	250	250
cis-1,3-Dichloropropene	10061-01-5	5	1	5	250	250
Trichloroethene	79-01-6	5	1	5	250	250
Dibromochloromethane	124-48-1	5	1	5	250	250
1,2-Dibromoethane	106-93-4	5	1	5	250	250

Table 1 - TestAmerica Primary Standard and Reporting Limits

Compound	CAS Number	Reporting Limits[1]				
		5 mL Water µg/L	Low Level 5 mL water µg/L	Low soil µg/kg	8260B/ 5035 Soil ug/kg	8260A 5030A Med Level Soil µg/kg
1,2,3-Trichloropropane	96-18-4	5	1	5	250	250
1,1,2-Trichloroethane	79-00-5	5	1	5	250	250
Benzene	71-43-2	5	1	5	250	250
Ethylmethacrylate	97-63-2	5	1	5	250	250
Trans-1,3-Dichloropropene	10061-02-6	5	1	5	250	250
Bromoform	75-25-2	5	1	5	250	250
4-Methyl-2-pentanone	108-10-1	20	5	20	1000	1,000
2-Hexanone	591-78-6	20	5	20	1000	1,000
Tetrachloroethene	127-18-4	5	1	5	250	250
Toluene	108-88-3	5	1	5	250	250
1,1,2,2-Tetrachloroethane	79-34-5	5	1	5	250	250
2-Chloroethyl vinyl ether	110-75-8	N/A[2]	N/A	50	1000	1,000
Vinyl acetate	108-05-4	10	2	10	500	500
Chlorobenzene	108-90-7	5	1	5	250	250
Ethylbenzene	100-41-4	5	1	5	250	250
Styrene	100-42-5	5	1	5	250	250
t-1,4-Dichloro-2-butene	110-57-6	5	1	5	250	250
m and p Xylenes		10	2	10	500	500
o-xylene	95-47-6	5.0	1	5	250	250
Total xylenes	1330-20-7	10	2	10	500	500
1,3-Dichlorobenzene	541-73-1	5	1	5	250	250
1,4-Dichlorobenzene	106-46-7	5	1	5	250	250
1,2-Dichlorobenzene	95-50-1	5	1	5	250	250
2,2-Dichloropropane	590-20-7	5	1	5	250	
Bromochloromethane	74-97-5	5	1	5	250	
1,1-Dichloropropene	563-58-6	5	1	5	250	
Bromodichloromethane	75-27-4	5	1	5	250	
1,2-Dichloropropane	78-87-5	5	1	5	250	
1,3-Dichloropropane	142-28-9	5	1	5	250	
Isopropylbenzene	98-82-8	5	1	5	250	
Bromobenzene	108-86-1	5	1	5	250	
n-Propylbenzene	103-65-1	5	1	5	250	
2-Chlorotoluene	95-49-8	5	1	5	250	
4-Chlorotoluene	106-43-4	5	1	5	250	
1,3,5-Trimethylbenzene	108-67-8	5	1	5	250	

Company Confidential & Proprietary

Table 1 - TestAmerica Primary Standard and Reporting Limits

Compound	CAS Number	Reporting Limits[1]				
		5 mL Water µg/L	Low Level 5 mL water µg/L	Low soil µg/kg	8260B/ 5035 Soil ug/kg	8260A 5030A Med Level Soil µg/kg
Tert-Butylbenzene	98-06-6	5	1	5	250	
1,2,4-Trimethylbenzene	95-63-6	5	1	5	250	
Sec-butylbenzene	135-98-8	5	1	5	250	
4-Isopropyltoluene	99-87-6	5	1	5	250	
n-Butylbenzene	104-51-8	5	1	5	250	
1,2,4-Trichlorobenzene	120-82-1	5	1	5	250	
Napthalene	91-20-3	5	1	5	250	
Hexachlorobutadiene	87-68-3	5	1	5	250	
1,2,3-Trichlorobenzene	87-61-6	5	1	5	250	
Acetonitrile	75-05-8	100	20	100	5000	
Cyclohexane	110-82-7	10	1	10	500	
Methyl Acetate	79-20-9	10	10	10	500	
Methyl cyclohexane	108-87-2	10	1	10	500	

[1] Reporting limits listed for soil/sediment are based on wet weight. The reporting limits calculated by the laboratory for soil/sediment, calculated on dry weight basis, will be higher.

[2] 2-Chloroethyl vinyl ether cannot be reliably recovered from acid preserved samples

Company Confidential & Proprietary

Table 2 - TestAmerica Primary Standard Calibration Levels, 5 mL purge

Compound	Calibration Level ug/L				
	Level 1	Level 2	Level 3	Level 4	Level 5
1,2-Dichloroethane-d4 (Surrogate)	5	20	50	100	200
Toluene-d8 (Surrogate)	5	20	50	100	200
4-Bromofluorobenzene (Surrogate)	5	20	50	100	200
Dichlorodifluoromethane	5	20	50	100	200
Chloromethane	5	20	50	100	200
Bromomethane	5	20	50	100	200
Vinyl chloride	5	20	50	100	200
Chloroethane	5	20	50	100	200
Trichlorofluoromethane	5	20	50	100	200
Acrolein	50	200	500	1000	2000
Acetone	5	20	50	100	200
Trichlorotrifluoroethane	5	20	50	100	200
Iodomethane	5	20	50	100	200
Carbon disulfide	5	20	50	100	200
Methylene chloride	5	20	50	100	200
tert-Butyl alcohol	100	400	1,000	2,000	4,000
1,1-Dichloroethene	5	20	50	100	200
1,1-Dichloroethane	5	20	50	100	200
trans-1,2-Dichloroethene	5	20	50	100	200
Acrylonitrile	50	200	500	1,000	2,000
Methyl *tert*-butyl ether (MTBE)	5	20	50	100	200
Hexane	5	20	50	100	200
cis-1,2-Dichloroethene	5	20	50	100	200
Tetrahydrofuran	5	20	50	100	200
Chloroform	5	20	50	100	200
1,2-Dichloroethane	5	20	50	100	200
Dibromomethane	5	20	50	100	200
2-Butanone	5	20	50	100	200
1,4-Dioxane	250	1000	2,500	5,000	10,000
1,1,1-Trichloroethane	5	20	50	100	200
Carbon tetrachloride	5	20	50	100	200
Bromodichloromethane	5	20	50	100	200
1,2-Dichloropropane	5	20	50	100	200
cis-1,3-Dichloropropene	5	20	50	100	200
Trichloroethene	5	20	50	100	200
Dibromochloromethane	5	20	50	100	200
1,2-Dibromoethane	5	20	50	100	200
1,2,3-Trichloropropane	5	20	50	100	200
Acetonitrile	50	200	500	1000	2000

Table 2 - TestAmerica Primary Standard Calibration Levels, 5 mL purge

Compound	Calibration Level ug/L				
	Level 1	Level 2	Level 3	Level 4	Level 5
1,1,2-Trichloroethane	5	20	50	100	200
Benzene	5	20	50	100	200
Ethylmethacrylate	5	20	50	100	200
trans-1,3-Dichloropropene	5	20	50	100	200
Bromoform	5	20	50	100	200
4-Methyl-2-pentanone	5	20	50	100	200
2-Hexanone	5	20	50	100	200
Tetrachloroethene	5	20	50	100	200
Toluene	5	20	50	100	200
1,1,2,2-Tetrachloroethane	5	20	50	100	200
2-Chloroethyl vinyl ether	10	40	100	200	400
Vinyl acetate	5	20	50	100	200
Chlorobenzene	5	20	50	100	200
Ethylbenzene	5	20	50	100	200
Styrene	5	20	50	100	200
t-1,4-Dichloro-2-butene	5	20	50	100	200
m and p Xylenes	10	40	100	200	400
o-xylene	5	20	50	100	200
1,3-Dichlorobenzene	5	20	50	100	200
1,4-Dichlorobenzene	5	20	50	100	200
1,2-Dichlorobenzene	5	20	50	100	200
2,2-Dichloropropane	5	20	50	100	200
Bromochloromethane	5	20	50	100	200
1,1-Dichloropropene	5	20	50	100	200
Bromodichloromethane	5	20	50	100	200
1,2-Dichloropropane	5	20	50	100	200
1,3-Dichloropropane	5	20	50	100	200
Isopropylbenzene	5	20	50	100	200
Bromobenzene	5	20	50	100	200
n-Propylbenzene	5	20	50	100	200
2-Chlorotoluene	5	20	50	100	200
4-Chlorotoluene	5	20	50	100	200
1,3,5-Trimethylbenzene	5	20	50	100	200
tert-Butylbenzene	5	20	50	100	200
1,2,4-Trimethylbenzene	5	20	50	100	200
sec-butylbenzene	5	20	50	100	200
4-Isopropyltoluene	5	20	50	100	200
n-Butylbenzene	5	20	50	100	200
1,2,4-Trichlorobenzene	5	20	50	100	200
Napthalene	5	20	50	100	200

Company Confidential & Proprietary

Table 2 - TestAmerica Primary Standard Calibration Levels, 5 mL purge

Compound	Calibration Level ug/L				
	Level 1	Level 2	Level 3	Level 4	Level 5
Hexachlorobutadiene	5	20	50	100	200
1,2,3-Trichlorobenzene	5	20	50	100	200

Table 2A - TestAmerica Primary Standard Calibration Levels, Low Level [1]

Compound	Calibration Level ug/L				
	Level 1	Level 2	Level 3	Level 4	Level 5
Dibromofluoromethane (Surrogate)	1	5	10	20	40
1,2-Dichloroethane-d4 (Surrogate)	1	5	10	20	40
Toluene-d8 (Surrogate)	1	5	10	20	40
Bromofluorobenzene (Surrogate)	1	5	10	20	40
Dichlorodifluoromethane	1	5	10	20	40
Chloromethane	1	5	10	20	40
Vinyl Chloride	1	5	10	20	40
Bromomethane	1	5	10	20	40
Chloroethane	1	5	10	20	40
Trichlorofluoromethane	1	5	10	20	40
Acrolein	10	50	100	200	400
Acetone	2	10	20	40	80
1,1-Dichloroethene	1	5	10	20	40
Trichlorotrifluoroethane	1	5	10	20	40
Iodomethane	1	5	10	20	40
Carbon Disulfide	1	5	10	20	40
Methylene Chloride	1	5	10	20	40
Acetonitrile	10	50	100	200	400
Acrylonitrile	10	50	100	200	400
Methyl tert-butyl ether	1	5	10	20	40
trans-1,2-Dichloroethene	1	5	10	20	40
Hexane	1	5	10	20	40
Vinyl acetate	1	5	10	20	40
1,1-Dichloroethane	1	5	10	20	40
tert-Butyl Alcohol	20	100	200	400	800
2-Butanone	2	10	20	40	80
cis-1,2-dichloroethene	1	5	10	20	40
2,2-Dichloropropane	1	5	10	20	40
Bromochloromethane	1	5	10	20	40
Chloroform	1	5	10	20	40

Table 2A - TestAmerica Primary Standard Calibration Levels, Low Level [1]

Compound	Calibration Level ug/L				
	Level 1	Level 2	Level 3	Level 4	Level 5
Tetrahydrofuran	1	5	10	20	40
1,1,1-Trichloroethane	1	5	10	20	40
1,1-Dichloropropene	1	5	10	20	40
Carbon Tetrachloride	1	5	10	20	40
1,2-Dichloroethane	1	5	10	20	40
Benzene	1	5	10	20	40
Trichloroethene	1	5	10	20	40
1,2-Dichloropropane	1	5	10	20	40
1,4-Dioxane	50	250	500	1000	2000
Dibromomethane	1	5	10	20	40
Bromodichloromethane	1	5	10	20	40
2-Chloroethyl vinyl ether	2	10	20	40	80
cis-1,3-Dichloropropene	1	5	10	20	40
4-Methyl-2-pentanone	2	10	20	40	80
Toluene	1	5	10	20	40
trans-1,3-Dichloropropene	1	5	10	20	40
Ethyl Methacrylate	1	5	10	20	40
1,1,2-Trichloroethane	1	5	10	20	40
1,3-Dichloropropane	1	5	10	20	40
Tetrachloroethene	1	5	10	20	40
2-Hexanone	2	10	20	40	80
Dibromochloromethane	1	5	10	20	40
1,2-Dibromoethane	1	5	10	20	40
Chlorobenzene	1	5	10	20	40
1,1,1,2-Tetrachloroethane	1	5	10	20	40
Ethylbenzene	1	5	10	20	40
m + p-Xylene	2	10	20	40	80
Xylene-o	1	5	10	20	40
Styrene	1	5	10	20	40
Bromoform	1	5	10	20	40
Isopropylbenzene	1	5	10	20	40
1,1,2,2-Tetrachloroethane	1	5	10	20	40
1,4-Dichloro-2-butene	1	5	10	20	40
1,2,3-Trichloropropane	1	5	10	20	40
Bromobenzene	1	5	10	20	40
n-Propylbenzene	1	5	10	20	40
2-Chlorotoluene	1	5	10	20	40
1,3,5-Trimethylbenzene	1	5	10	20	40
4-Chlorotoluene	1	5	10	20	40

Company Confidential & Proprietary

Table 2A - TestAmerica Primary Standard Calibration Levels, Low Level [1]

Compound	Calibration Level ug/L				
	Level 1	Level 2	Level 3	Level 4	Level 5
tert-Butylbenzene	1	5	10	20	40
1,2,4-Trimethylbenzene	1	5	10	20	40
sec-Butylbenzene	1	5	10	20	40
4-Isopropyltoluene	1	5	10	20	40
1,3-Dichlorobenzene	1	5	10	20	40
1,4-Dichlorobenzene	1	5	10	20	40
n-Butylbenzene	1	5	10	20	40
1,2-Dichlorobenzene	1	5	10	20	40
1,2-Dibromo-3-chloropropane	1	5	10	20	40
1,2,4-Trichlorobenzene	1	5	10	20	40
Hexachlorobutadiene	1	5	10	20	40
Naphthalene	1	5	10	20	40
1,2,3-Trichlorobenzene	1	5	10	20	40
Cyclohexane	1	5	10	20	40
Methyl Acetate	2	10	20	40	80
Methylcyclohexane	1	5	10	20	40
1,3,5-Trichlorobenzene	1	5	10	20	40

[1] 25 mL purge samples analyzed at 5 mL purge on more sensitive equipment.

Company Confidential & Proprietary

Table 3 - TestAmerica Appendix IX Standard and Reporting Limits, 5 mL purge

Compound	CAS Number	Reporting Limits			
		5 mL Water µg/L	Low Level 5mL purge water µg/L	Low Soil µg/kg	Medium Soil µg/mL
Allyl Chloride	107-05-1	10	2	10	500
Dichlorofluoromethane	75-43-4	10	2	10	500
Isopropyl ether	108-20-3	10	2	10	500
Chloroprene	126-99-8	5	2	5	250
n-Butanol	71-36-3	200	50	200	10,000
Propionitrile	107-12-0	20	4	20	1000
Methacrylonitrile	126-98-7	5	2	5	250
Isobutanol	78-83-1	200	50	200	10,000
Methyl methacrylate	80-62-6	5	2	5	250
1,1,1,2-Tetrachloroethane	630-20-6	5	1	5	250
1,2-Dibromo-3-chloropropane	96-12-8	10	2	10	500
Ethyl ether	60-29-7	10	2	10	500
Ethyl Acetate	141-78-6	20	4	20	1,000
2-Nitropropane	79-46-9	10	4	10	500
Cyclohexanone	108-94-1	50	20	50	2500
Isopropylbenzene	98-82-8	5	1	5	250
2-Methylnaphthalene (Michigan only)	91-57-6	NA	5	NA	330

Company Confidential & Proprietary

Table 4

Recommended/TestAmerica Appendix IX Standard Calibration Levels, µg/L

Compound	Level 1	Level 2	Level 3	Level 4	Level 5
Allyl Chloride	5	20	50	100	200
Dichlorofluoromethane	5	20	50	100	200
Isopropyl ether	5	20	50	100	200
Chloroprene	5	20	50	100	200
n-Butanol	100	400	1,000	2,000	4,000
Propionitrile	10	40	100	200	400
Methacrylonitrile	5	20	50	100	200
Isobutanol	100	400	1,000	2,000	4,000
Methyl methacrylate	5	20	50	100	200
1,1,1,2-Tetrachloroethane	5	20	50	100	200
1,2-Dibromo-3-chloropropane	10	40	100	200	400
Ethyl ether	5	20	50	100	200
Ethyl Acetate	10	40	100	200	400
2-Nitropropane	10	40	100	200	400
Cyclohexanone	50	200	500	1,000	2,000
2-Methylnaphthalene (Michigan only)	2	10	20	40	80
Ethyl tert-butyl ether	5	20	50	100	200
tert-Amyl methyl ether	5	20	50	100	200
1,2,3-Trimethylbenzene	5	20	50	100	200

Company Confidential & Proprietary

Table 5 - Reportable Analytes for TestAmerica Standard Tests, Primary Standard

Compound	CAS Number	TestAmerica Standard List	TCLP	TCL	Appendix IX
Dichlorodifluoromethane	75-71-8			X	X
Chloromethane	74-87-3	X		X	X
Bromomethane	74-83-9	X		X	X
Vinyl chloride	75-01-4	X	X	X	X
Chloroethane	75-00-3	X		X	X
Trichlorofluoromethane	75-69-4			X	X
Acrolein	107-02-8				X
Acetone	67-64-1	X		X	X
Trichlorotrifluoroethane	76-13-1				
Iodomethane	74-88-4				X
Carbon disulfide	75-15-0	X		X	X
Methylene chloride	75-09-2	X		X	X
tert-Butyl alcohol	75-65-0				
1,1-Dichloroethene	75-35-4	X	X	X	X
1,1-Dichloroethane	75-34-3	X		X	X
trans-1,2-Dichloroethene	156-60-5	X		X	X
Total 1,2-Dichloroethene		X		X	X
Acrylonitrile	107-13-1				X
Methyl *tert*-butyl ether (MTBE)	1634-04-4			X	
Hexane	110-54-3				
cis-1,2-Dichloroethene	156-59-2	X		X	
Tetrahydrofuran	109-99-9				
Chloroform	67-66-3	X	X	X	X
1,2-Dichloroethane	107-06-2	X	X	X	X
Dibromomethane	74-95-3				X
2-Butanone	78-93-3	X	X	X	X
1,4-Dioxane	123-91-1				X
1,1,1-Trichloroethane	71-55-6	X		X	X
Carbon tetrachloride	56-23-5	X	X	X	X
Bromodichloromethane	75-27-4	X		X	X
1,2-Dichloropropane	78-87-5	X		X	X
cis-1,3-Dichloropropene	10061-01-5	X		X	X
Trichloroethene	79-01-6	X	X	X	X
Dibromochloromethane	124-48-1	X		X	X
1,2-Dibromoethane	106-93-4			X	X
1,2,3-Trichloropropane	96-18-4				X
1,1,2-Trichloroethane	79-00-5	X		X	X

Company Confidential & Proprietary

Table 5 - Reportable Analytes for TestAmerica Standard Tests, Primary Standard

Compound	CAS Number	TestAmerica Standard List	TCLP	TCL	Appendix IX
Benzene	71-43-2	X	X	X	X
Ethylmethacrylate	97-63-2				X
trans-1,3-Dichloropropene	10061-02-6	X		X	X
Bromoform	75-25-2	X		X	X
4-Methyl-2-pentanone	108-10-1	X		X	X
2-Hexanone	591-78-6	X		X	X
Tetrachloroethene	127-18-4	X	X	X	X
Toluene	108-88-3	X		X	X
1,1,2,2-Tetrachloroethane	79-34-5	X		X	X
2-Chloroethyl vinyl ether	110-75-8				
Vinyl acetate	108-05-4				X
Chlorobenzene	108-90-7	X	X	X	X
Ethylbenzene	100-41-4	X		X	X
Styrene	100-42-5	X		X	X
t-1,4-Dichloro-2-butene	110-57-6				X
m and p Xylenes		X		X	X
o-xylene	95-47-6	X		X	X
Total xylenes	1330-20-7	X		X	X
1,3-Dichlorobenzene	541-73-1	X		X	
1,4-Dichlorobenzene	106-46-7	X		X	
1,2-Dichlorobenzene	95-50-1	X		X	
Cyclohexane	110-82-7	X		X	
Methyl Acetate	79-20-9	X		X	
Methyl cyclohexane	108-87-2	X		X	
Isopropylbenzene	98-82-8			X	
1,2-Dibromo-3-chloropropane	96-12-8			X	X
1,2,4-Trichlorobenzene	120-82-1			X	
Acetonitrile	75-05-8				X
1,1,1,2-Tetrachloroethane	630-20-6				X
2,2-Dichloropropene	594-20-7				
Bromochloromethane	74-97-5				
1,1-Dichloropropene	563-58-6				
1,3-Dichloropropane	142-28-9				
Bromobenzene	108-86-1				
n-Propylbenzene	103-65-1				
2-Chlorotoluene	95-49-8				
1,3,5-Trimethylbenzene	108-67-8				
4-Chlorotoluene	106-43-4				
tert-Butylbenzene	98-06-6				
1,2,4-Trimethylbenzene	95-63-6				

Company Confidential & Proprietary

Table 5 - Reportable Analytes for TestAmerica Standard Tests, Primary Standard

Compound	CAS Number	TestAmerica Standard List	TCLP	TCL	Appendix IX
sec-Butylbenzene	135-98-8				
4-Isopropyltoluene	99-87-6				
n-Butylbenzene	104-51-8				
Hexachlorobutadiene	87-68-3				
Naphthalene	91-20-3				
1,2,3-Trichlorobenzene	87-61-6				
1,3,5-Trichlorobenzene	108-70-3				

Table 6

Reportable Analytes for TestAmerica Standard Tests, Appendix IX standard

Compound	Number	Appendix IX
Allyl Chloride	107-05-1	X
Dichlorofluoromethane	75-43-4	
Isopropyl ether	108-20-3	
Chloroprene	126-99-8	X
n-Butanol	71-36-3	
Propionitrile	107-12-0	X
Methacrylonitrile	126-98-7	X
Isobutanol	78-83-1	X
Methyl methacrylate	80-62-6	X
Ethyl ether	60-29-7	
Ethyl Acetate	141-78-6	
2-Nitropropane	79-46-9	
Cyclohexanone	108-94-1	
Ethyl tert-butyl ether	637-92-3	
tert-Amyl methyl ether	994-05-8	
1,2,3-trimethylbenzene	526-73-8	

Company Confidential & Proprietary

Table 7 - Internal Standards

Compound	Standard Concentration µg/mL (may vary per matrix)	Quantitation ion (5 mL purge)
Fluorobenzene	50 – 250	96
Chlorobenzene-d5	50 – 250	117
1,4-Dichlorobenzene-d4	50 – 250	152

Notes:

1) Except for medium level soils, the surrogate and internal standards may be combined in one solution.

Table 8 - Surrogate Standards

Surrogate Compounds	Standard Concentration µg/mL (may vary per matrix)
1,2-Dichloroethane-d_4	50 – 250
Dibromofluoromethane	50 – 250
Toluene-d_8	50 - 250
4-Bromofluorobenzene	50 – 250

Notes:

1) Except for medium level soils, the surrogate and internal standards may be combined in one solution.

2) Recovery limits for surrogates are generated from historical data and are maintained by the QA Dept.

Company Confidential & Proprietary

Table 9 - Matrix Spike / LCS Control Compounds

Compound	Standard Concentration µg /mL
1,1,1-Trichloroethane	50 - 250
1,1,2,2-Tetrachloroethane	50
1,1,2-Trichloro-1,2,2-trifluoroethane	50
1,1,2-Trichloroethane	50
1,1-Dichloroethane	50
1,1-Dichloroethene	50
1,1-Dichloropropene	50
1,2,3-Trichlorobenzene	50
1,2,3-Trichloropropane	50
1,2,4-Trichlorobenzene	50
1,2,4-Trimethylbenzene	50
1,2-Dibromo-3-chloropropane	50
1,2-Dibromoethane	50
1,2-Dichlorobenzene	50
1,2-Dichloroethane	50
1,2-Dichloroethene (total)	100
1,2-Dichloropropane	50
1,3,5-Trimethylbenzene 1,3-Dichlorobenzene	50 50
1,3-Dichloropropane 1,4-Dichlorobenzene	50 50
2,2-Dichloropropane	50
2-Butanone	50
2-Chloroethyl Vinyl Ether	100 - 500
2-Chlorotoluene	50
2-Hexanone	50
4-Chlorotoluene	50
4-Methyl-2-pentanone	50
Acetone	50
Acetonitrile	500 – 2500
Acrolein	500
Acrylonitrile	100 - 500
Benzene	50
Bromobenzene	50
Bromochloromethane	50
Bromodichloromethane	50
Bromoform	50
Bromomethane	50
Carbon disulfide	50
Carbon tetrachloride	50
Chlorobenzene	50
Chloroethane	50

Company Confidential & Proprietary

Table 9 - Matrix Spike / LCS Control Compounds

Compound	Standard Concentration µg /mL
Chloroform	50
Chloromethane	50
cis-1,2-Dichloroethene	50
cis-1,3-Dichloropropene	50
Cyclohexane	50
Dibromochloromethane	50
Dibromomethane	50
Dichlorodifluoromethane	50
Ethylbenzene	50
Hexachlorobutadiene	50
Iodomethane	50
Isopropylbenzene	50
Isopropylether	50
Methyl acetate	50
Methyl tert-butyl ether (MTBE)	50
Methylcyclohexane	50
Methylene chloride	50
Naphthalene	50
n-Butylbenzene	50
n-Hexane (Ohio VAP only)	50
n-Propylbenzene	50
p-Isopropyltoluene	50
sec-Butylbenzene	50
Styrene	50
tert-Butylbenzene	50
Tetrachloroethene	50
Toluene	50
trans-1,2-Dichloroethene	50
trans-1,2-Dichloroethene	50
trans-1,3-Dichloropropene	50
Trichloroethene	50
Trichlorofluoromethane	50
Vinyl Acetate	50
Vinyl chloride	50
Xylenes (total)	150 - 750

Notes: 1) 5 µL of the standard is added to the LCS or matrix spiked sample. This results in a concentration of each spike analyte in the sample of 50µg/L for a 5 mL purge or 10 µg/L for a 25 mL purge.

2) Recovery and precision limits for LCS and MS/MSD are generated from historical data and are maintained by QA Dept.

Company Confidential & Proprietary

Table 10 - BFB Key Ion Abundance Criteria

Mass	Ion Abundance Criteria
50	15% to 40% of Mass 95
75	30% to 60% of Mass 95
95	Base Peak, 100% Relative Abundance
96	5% to 9% of Mass 95
173	Less Than 2% of Mass 174
174	Greater Than 50% of Mass 95
175	5% to 9% of Mass 174
176	Greater Than 95%, But Less Than 101% of Mass 174
177	5% to 9% of Mass 176

Table 11 - SPCC Compounds and Minimum Response Factors

Compound	8260B, 8260A Min. RF
Chloromethane	0.100
1,1-Dichloroethane	0.100
Bromoform	0.100
1,1,2,2-Tetrachloroethane	0.300
Chlorobenzene	0.300

Table 12 - CCC compounds

Compound	Max. %RSD from Initial Calibration	Max. %D for continuing calibration
Vinyl Chloride	30	20
1,1-Dichloroethene	30	20
Chloroform	30	20
1,2-Dichloropropane	30	20
Toluene	30	20
Ethylbenzene	30	20
n-Hexane (Ohio VAP only)	30	20

Table 13 - Characteristic Ions

Compound	Primary*	Secondary	Tertiary
1,2-Dichloroethane-d_4 (Surrogate)	65	102	
Dichlorodifluoromethane	85	87	50, 101,103
Chloromethane	50	52	49
Vinyl chloride	62	64	61
Bromomethane	94	96	79
Chloroethane	64	66	49
Trichlorofluoromethane	101	103	66
1,1-Dichloroethene	96	61	98
Acrolein	56	55	58
Iodomethane	142	127	141
Carbon disulfide	76	78	
Trichlorotrifluoroethane	151	101	153
Acetone	43	58	
Methylene chloride	84	49	51, 86
tert-Butyl alcohol	59	74	
trans-1,2-Dichloroethene	96	61	98
Acrylonitrile	53	52	51
Methyl *tert* butyl ether	73		
Hexane	57	43	
1,1-Dichloroethane	63	65	83
cis-1,2-Dichloroethene	96	61	98
2-Butanone	43	72**	
Tetrahydrofuran	42	71	
Chloroform	83	85	47
1,2-Dichloroethane	62	64	98

Company Confidential & Proprietary

Table 13 - Characteristic Ions

Compound	Primary*	Secondary	Tertiary
Dibromomethane	93	174	95, 172, 176
1,4-Dioxane	88	58	
Vinyl acetate	43	86	
1,1,1-Trichloroethane	97	99	117
Carbon tetrachloride	117	119	121
Benzene	78	52	77
Trichloroethene	130	95	97, 132
1,2-Dichloropropane	63	65	41
Bromodichloromethane	83	85	129
2-Chloroethyl vinyl ether	63	65	106
cis-1,3-Dichloropropene	75	77	39
trans-1,3-Dichloropropene	75	77	39
1,1,2-Trichloroethane	97	83	85, 99
Chlorodibromomethane	129	127	131
Bromoform	173	171	175, 252
1,2,3-Trichloropropane	75	110	77, 112, 97
Toluene-d_8 (Surrogate)	98	70	100
4-Bromofluorobenzene (Surrogate)	95	174	176
Toluene	91	92	65
4-Methyl-2-pentanone	43	58	57, 100
Tetrachloroethene	164	166	131
Ethyl methacrylate	69	41	99, 86, 114
2-Hexanone	43	58	57, 100
Chlorobenzene	112	114	77
Ethylbenzene	106	91	
Xylenes	106	91	
Styrene	104	103	78, 51, 77
Dichlorobenzene (all isomers)	146	148	111
trans 1,4-Dichloro-2-butene	53	75	89, 77, 124
1,1,2,2-Tetrachloroethane	83	85	131, 133
Allyl Chloride	76	41	78
Acetonitrile	40	41	
Dichlorofluoromethane	67	69	
Isopropyl ether	87	59	45
Chloroprene	53	88	90
n-Butanol	56	41	42
Propionitrile	54	52	55
Methacrylonitrile	41	67	52
Isobutanol	41	43	74
Methyl methacrylate	41	69	100

Company Confidential & Proprietary

Table 13 - Characteristic Ions

Compound	Primary*	Secondary	Tertiary
1,1,1,2-Tetrachloroethane	131	133	119
1,2-Dibromo-3-chloropropane	157	155	75
Ethyl ether	59	74	
Ethyl Acetate	43	88	61
2-Nitropropane	41	43	46
Cyclohexanone	55	42	98
Isopropylbenzene	105	120	
Cyclohexane	56	69	84
Methyl Acetate	43	74	
Methyl cyclohexane	83	55	98

* The primary ion must be used for quantitation unless interferences are present, in which case a secondary ion may be used.

** m/z 43 may be used for quantitation of 2-Butanone, but m/z 72 must be present for positive identification.

Company Confidential & Proprietary

Title: INDUCTIVELY COUPLED PLASMA – MASS SPECTROMETRY

[Method: EPA Method 200.8 and SW846 Method 6020]

Approvals (Signature/Date):

Technology Specialist	1/5/09 Date	Health & Safety Coordinator	1/06/09 Date
Quality Assurance Manager	1/5/09 Date	Laboratory Director	1/5/09 Date

This SOP was previously identified as SOP No. NC-MT-002, Rev 4.4, dated 07/30/08

Copyright Information:

This documentation has been prepared by TestAmerica Analytical Testing Corp. and its affiliates ("TestAmerica"), solely for their own use and the use of their customers in evaluating their qualifications and capabilities in connection with a particular project. The user of this document agrees by its acceptance to return it to TestAmerica upon request and not to reproduce, copy, lend, or otherwise disclose its contents, directly or indirectly, and not to use if for any other purpose other than that for which it was specifically provided. The user also agrees that where consultants or other outside parties are involved in the evaluation process, access to these documents shall not be given to said parties unless those parties also specifically agree to these conditions.

THIS DOCUMENT CONTAINS VALUABLE CONFIDENTIAL AND PROPRIETARY INFORMATION. DISCLOSURE, USE OR REPRODUCTION OF THESE MATERIALS WITHOUT THE WRITTEN AUTHORIZATION OF TESTAMERICA IS STRICTLY PROHIBITED. THIS UNPUBLISHED WORK BY TESTAMERICA IS PROTECTED BY STATE AND FEDERAL LAW OF THE UNITED STATES. IF PUBLICATION OF THIS WORK SHOULD OCCUR THE FOLLOWING NOTICE SHALL APPLY: ©COPYRIGHT 2008 TESTAMERICA ANALYTICAL TESTING CORP. ALL RIGHTS RESERVED.

Facility Distribution No. _____ **Distributed To:** _____

TABLE OF CONTENTS

1. Scope and Application 3
2. Summary of Method 3
3. Definitions 3
4. Interferences 4
5. SAFETY 4
6. Equipment and Supplies 6
7. Reagents and Standards 6
8. Sample Collection, PRESERVATION and Storage 7
9. Quality Control 7
10. Calibration and Standardization 11
11. Procedure 14
12. Data Analysis and Calculations 15
13. Method Performance 17
14. Pollution Prevention 17
15. Waste Management 17
16. References 18
17. Miscellaneous (Tables, Appendices, Etc.) 19

1. SCOPE AND APPLICATION

1.1. This procedure describes multi-elemental analysis by inductively coupled plasma-mass spectrometry (ICP-MS) based on SW-846 protocol as described in EPA Methods 6020 and 200.8. The source method lists 15 elements approved for analysis by ICP/MS (Al, Sb, As, Ba, Be, Cd, Cr, Co, Cu, Pb, Mn, Ni, Ag, Tl, and Zn). Additional elements may be included provided that the method performance criteria presented in Section 9 is met. However, project approval may be required from the controlling agencies for compliance testing beyond the 15 elements included in the promulgated method. Reporting limits are listed in Table VII.

1.2. The procedure is applicable to the analysis of waters (groundwaters and surface waters), soils, and wastes. Preliminary acid digestion is required for groundwater, aqueous samples, sludges, sediments, and other solid wastes for which total (acid-leachable) elements are requested. See SOPs NC-IP-010 and NC-IP-011 for preparation details.

1.3. The associated LIMS method codes are MH (6020) and QV (200.8)**.**

1.4. This document accurately reflects current laboratory Standard Operating Procedures (SOP) as of the date above. All facility SOPs are maintained and updated as necessary.

2. SUMMARY OF METHOD

2.1. Aqueous samples, digestates, or leachates are nebulized into a spray chamber where a stream of argon carries the sample aerosol through the quartz torch and injects it into an R.F. plasma. There the sample is decomposed and desolvated. The ions produced are entrained in the plasma gas, and by means of a water-cooled differentially-pumped interface, introduced into a high-vacuum chamber that houses a quadrapole mass spectrometer capable of providing a resolution better than, or equal to, 0.9 AMU peak width at 10% of the peak height. For analysis by Method 200.8, the resolution requirement is 1.0 amu at 5% peak height. The ions are sorted according to their mass-to-charge ratio and measured with a channel electron multiplier. Interference must be assessed and valid corrections applied, or the data flagged, to indicate problems. Interference correction must include compensation for background ions contributed by the plasma gas, reagents and the constituents of the sample matrix. Use of the internal standard technique is required to compensate for suppressions and enhancements caused by sample matrices.

3. DEFINITIONS

3.1. Refer to the glossary in the TestAmerica North Canton Quality Assurance Manual (QAM), current version.

Company Confidential & Proprietary

4. INTERFERENCES

4.1. Isobaric Interferences. Isobaric interferences in the ICPMS are caused by isotopes of different elements forming ions with the same nominal mass-to-charge ratio (m/z). Most interferences of this type are corrected for by the instrument software.

4.2. Isobaric Molecular and Doubly Charged Ion Interferences. Isobaric molecular interferences are caused by ions consisting of more than one atom or charge. When these interferences cannot be avoided by the use of another isotope with sufficient natural abundance, corrections must be applied; and the data flagged to indicate the presence of interferences.

4.3. Physical Interferences. Physical interferences are associated with the transport and nebulization process. Internal standards are used to compensate for these types of interferences.

4.3.1. Internal standards should be added at a level to give approximately 100,000 – 1,000,000 counts of raw signal intensity. The mass of the internal standard should ideally be within 20 amu of the mass of the measured analyte.

4.3.2. Matrix effects will be monitored by comparing the internal standard intensity in the sample to the internal standard intensity of the calibration blank. When performing Method 6020, the internal standard intensities must be between 30% and 120% of the intensities in the calibration blank. When performing Method 200.8, the internal standards must be between 60% and 125% of the calibration blank. If they fall outside this window, a dilution is performed on the sample to correct for matrix effects and the sample re-analyzed.

4.3.3. Memory effects are dependent on the relative concentration differences between samples and/or standards, which are analyzed sequentially. The rinse period between samples must be long enough to eliminate significant memory interference.

4.3.4. Method interferences may be caused by contaminants in solvents, reagents, glassware, and other processing apparatus that lead to discrete artifacts. All of these materials must be demonstrated routinely to be free from interferences under conditions of the analysis by running laboratory method blanks as described in the Quality Control section. All glassware is cleaned per SOP NC-QA-014.Specific selection of reagents may be required to avoid introduction of contaminants.

5. SAFETY

5.1. Employees must abide by the policies and procedures in the Corporate Environmental

Health and Safety Manual and this document.

5.2. Eye protection that protects against splash, laboratory coat, and appropriate gloves must be worn while samples, standards, solvents, and reagents are being handled. Cut-resistant gloves must be worn doing any other task that presents a strong possibility of getting cut. Disposable gloves that have been contaminated must be removed and discarded; other gloves must be cleaned immediately.

5.3. The following is a list of the materials used in this method, which have a serious or significant hazard rating. **NOTE: This list does not include all materials used in the method. The table contains a summary of the primary hazards listed in the MSDS for each of the materials listed in the table.** A complete list of materials used in the method can be found in the Reagents and Standards section. Employees must review the information in the MSDS for each material before using it for the first time or when there are major changes to the MSDS.

Material (1)	Hazards	Exposure Limit (2)	Signs and symptoms of exposure
Hydrochloric Acid	Corrosive Poison	5 ppm-Ceiling	Inhalation of vapors can cause coughing, choking, inflammation of the nose, throat, and upper respiratory tract, and in severe cases, pulmonary edema, circulatory failure, and death. Can cause redness, pain, and severe skin burns. Vapors are irritating and may cause damage to the eyes. Contact may cause severe burns and permanent eye damage.
Nitric Acid	Corrosive Oxidizer Poison	2 ppm-TWA 4 ppm-STEL	Nitric acid is extremely hazardous; it is corrosive, reactive, an oxidizer, and a poison. Inhalation of vapors can cause breathing difficulties and lead to pneumonia and pulmonary edema, which may be fatal. Other symptoms may include coughing, choking, and irritation of the nose, throat, and respiratory tract. Can cause redness, pain, and severe skin burns. Concentrated solutions cause deep ulcers and stain skin a yellow or yellow-brown color. Vapors are irritating and may cause damage to the eyes. Contact may cause severe burns and permanent eye damage.
1 – Always add acid to water to prevent violent reactions.			
2 – Exposure limit refers to the OSHA regulatory exposure limit.			

5.4. The RF Generator produces strong radio frequency waves--most of which are unshielded. People with pacemakers must not go near the instrument while in operation.

5.5. Exposure to chemicals must be maintained **as low as reasonably achievable**. All samples with stickers that read "Caution/Use Hood!" **must** be opened in the hood. Contact the EH&S Coordinator if this is not possible. Solvent and waste containers must be kept closed unless transfers are being made.

5.6. Standards in solution must be diluted in the open laboratory when syringes and the like are utilized.

5.7. The ICP plasma emits strong UV light and is harmful to vision. All analysts must avoid looking directly at the plasma.

5.8. All work must be stopped in the event of a known or potential compromise to the health and safety of a TestAmerica associate. The situation must be reported **immediately** to a laboratory supervisor and the EH&S Coordinator.

6. EQUIPMENT AND SUPPLIES

6.1. Argon gas: High purity grade (99.99%)

6.2. Inductively Coupled Plasma Mass Spectrometer capable of providing resolution, less than or equal to 0.9 AMU at 10% peak height from 6-253 AMU and 1.0AMU at 5% peak height from 6-253 AMU with a data system that allows corrections for isobaric interferences and the application of the internal standard technique.

6.3. A four channel peristaltic pump

6.4. Appropriate water-cooling device

6.5. Calibrated automatic pipettes

6.6. Autosampler with autosampler tubes

6.7. Hydrogen/helium gas mixture with approximate ratio of 7% hydrogen and 93% helium used for CCT mode.

7. REAGENTS AND STANDARDS

7.1. Calibration standards are purchased as custom multi-element mixes or as single element solutions. All standards must be stored in FEP fluorocarbon or previously unused polyethylene or polypropylene bottles. Intermediate standard solutions must be replaced prior to the expiration date provided by the manufacturer. If no expiration date is provided, the intermediate solutions may be used for up to one year and must be replaced sooner if verification from an independent source indicates a problem. Additional information can be found in SOP NC-QA-017.

7.2. Check Calibration Standard (ICV) - A quality control standard similar to the calibration standards and prepared in the same acid matrix. This solution must be made at a concentration near the midpoint of the calibration curve. This standard is composed of analytes from a different source from those used in the calibration of the instrument. See Table VI. Refer to the Standard Logbook for details on standard preparation.

7.3. The tuning solution is purchased as custom multi-element mixes or as single element solutions. All standards must be stored in FEP fluorocarbon or previously unused polyethylene or polypropylene bottles. The solution must be replaced prior to the expiration date provided by the manufacturer. If no expiration date is provided, the intermediate solutions may be used for up to one year.

7.4. Reagent water - ASTM Type I or equivalent for the elements of interest, generated using an ion-exchange water polishing system.

7.5. Rinse Solution -.Carefully dilute 80 ml of concentrated HNO3 to 4.0 L with reagent water.

8. SAMPLE COLLECTION, PRESERVATION, AND STORAGE

8.1. Aqueous samples are preserved with nitric acid to a pH of < 2, and may be stored in plastic or glass. Preservation must be verified prior to analysis.

8.2. Soil samples do not require preservation, but must be stored at 4° ± 2°C until the time of preparation.

8.3. The analytical holding times for metals are six months from the time of collection to analysis.

8.4. Solid and aqueous samples must be digested prior to analysis by the appropriate method.

9. QUALITY CONTROL

9.1. Initial Demonstration of Capability

Table V provides a summary of quality control requirements including type, frequency, acceptance criteria and corrective action. Prior to analysis of any analyte the following requirements must be met.

9.1.1. Instrument Detection Limit (IDL). IDLs can be determined by calculating the average of the standard deviations of the three runs on three non-consecutive days from the analysis of a reagent blank solution with seven consecutive measurements per day. Each measurement must be performed as a separate analytical sample. The IDL must be performed every three months. The IDL is

calculated by multiplying by 3, the average of the standard deviations obtained on three nonconsecutive days.

9.1.1.1. IDL = (3) (s), where s = standard deviation.

9.1.2. Linear Calibration Ranges - Linear calibration ranges are primarily detector limited. The linear range must be determined at instrument setup, and the upper limit must be verified annually or whenever a change in instrument hardware or operating conditions, in the judgement of the analyst, may lower expected ranges. Standards used to determine or verify linear ranges must be analyzed during a routine analytical run. The linear range is the concentration above which sample results cannot be reported.

9.1.2.1. For initial determination of the upper limit of the linear range, determine the signal responses from three different concentration standards across the estimated range. One standard must be at the upper limit of the estimated range. Results must recover within 10% of the expected value for the three standards. The linear range is then set at the concentration of the high standard.

9.1.2.2. For verification of the upper limit of the linear range, the high standard must recover within 10% of its expected value

9.2. Batch Definition

9.2.1. A batch is a group of no greater than 20 samples excluding QC samples (LCS, Method Blank, MS, MSD) which are processed similarly with respect to the procedure. All sample setups must be initiated within a 24-hour period from the initial preparation or extraction and without interruption of the process. All samples within the batch must be treated with the same lots of reagents and the same processes.

9.3. Method Blank

9.3.1. One method blank (MB) must be processed with each preparation batch. The method blank consists of reagent water containing all reagents specific to the method that is carried through the entire analytical procedure, including preparation and analysis. The method blank is used to identify any system and process interferences or contamination of the analytical system that may lead to the reporting of elevated analyte concentrations or false positive data. The method blank must not contain any analyte of interest at, or above, the reporting limit (exception: common laboratory contaminants, see below) or at, or above, 5% of the measured concentration of that analyte in associated samples, whichever is higher (sample result must be a minimum of 20x higher than the blank

contamination level).

Note: For Ohio VAP samples, all analytes must be less than the reporting limit unless the samples are non-detect.

9.3.2. Corrective Action for Method Blank

9.3.2.1. If the analyte is a common laboratory contaminant (copper, iron, lead, or zinc), the data may be reported with qualifiers if the concentration of the analyte in the method blank is less than two times the RL. Barium, chromium, and manganese may also be considered common laboratory contaminants at ICPMS reporting limits. **Such action must be addressed in the project narrative. This is not applicable for Ohio VAP samples.**

9.3.2.2. Repreparation and re-analysis of all samples associated with an unacceptable method blank is required when reportable concentrations are determined in the samples (see exception noted above).

9.3.2.3. If there is no analyte greater than the RL in the samples associated with an unacceptable method blank, the data may be reported with qualifiers. Such action must be addressed in the project narrative.

9.3.2.4. If the above criteria are not met and re-analysis is not possible, then the sample data must be qualified. This anomaly must be addressed in the project narrative.

9.4. Laboratory Control Sample (LCS)

9.4.1. One LCS from an independent source must be processed with each preparation batch. The LCS must be carried through the entire analytical procedure. The LCS is used to monitor the accuracy of the analytical process. Ongoing monitoring of the LCS results provides evidence that the laboratory is performing the method within acceptable accuracy and precision guidelines. The historical limits for the LCS for each analyte are in the LIMS system. If the LCS exceeds these limits for any analyte, that analyte is judged to be out of control and must be corrected before the analysis can be reported

9.4.2. Corrective Action for LCS

9.4.2.1. If any analyte is outside established control limits, the system is out of control and corrective action must occur.

9.4.2.2. The only exception is if the LCS recoveries are biased high and the

associated sample is ND for the parameter(s) of interest, the batch is acceptable. **This must be addressed in the project narrative.**

9.4.2.3. Corrective action will be repreparation and re-analysis of the batch unless the client agrees that other corrective action is acceptable. **Note:** For Ohio VAP samples, the batch must be redigested if the exception in Section 9.4.2.2 is not applicable.

9.5. Matrix Spike/Matrix Spike Duplicate (MS/MSD)

9.5.1. One MS/MSD pair must be processed for each batch. A matrix spike (MS) is a field sample to which known concentrations of target analytes have been added. A matrix spike duplicate (MSD) is a second aliquot of the same sample (spiked identically as the MS) prepared and analyzed along with the sample and matrix spike. Some client-specific data quality objectives (DQOs) may require the use of sample duplicates in place of, or in addition to, MS/MSDs. The MS/MSD results are used to determine the effect of a matrix on the precision and accuracy of the analytical process. Due to the potential variability of the matrix of each sample, these results may have immediate bearing only on the specific sample spiked. Samples identified as field blanks cannot be used for MS/MSD analysis. The historical spike recovery acceptance limits for each analyte are in the LIMS system. If they are not in control, and all other quality control criteria have been met, then a matrix interference is suspected.

9.5.2. Corrective action for MS/MSDs

9.5.2.1. If the analyte recovery or RPD falls outside the acceptance range, the recovery of that analyte must be in control for the LCS. If the LCS recovery is within limits, then the laboratory operation is in control and the results may be accepted. If the recovery of the LCS is outside limits, corrective action must be taken. Corrective action will include repreparation and re-analysis of the batch.

9.5.2.2. If the native analyte concentration in the MS/MSD exceeds four times the spike level for that analyte, the recovery data is reported as NC (not calculated).

9.5.2.3. If an MS/MSD is not possible due to limited sample volume, then a laboratory control sample duplicate (LCSD) must be analyzed. The RPD of the LCS and LCSD must be compared to the laboratory limits.

9.5.2.4. If client program requirements specify to confirm matrix interferences, repreparation and re-analysis of the MS/MSD may be necessary.

Company Confidential & Proprietary

9.6. Sample Duplicate

9.6.1. A sample duplicate (DU) is a second aliquot of an environmental sample taken from the same sample container, when possible, that is processed with the first aliquot of that sample. That is, sample duplicates are processed as independent samples within the same QC batch. The sample and DU results are compared to determine the effect of the sample matrix on the precision of the analytical process. As with the MS/MSD results, the sample/DU precision results are not necessarily representative of the precision for other samples in the batch.

9.6.2. Sample duplicates may be performed in lieu of, or in addition to, MSDs.

9.7. Control Limits

9.7.1. Control limits are established by the laboratory as described in SOP NC-QA-018.

9.7.2. Laboratory control limits are internally generated and updated periodically unless method specified. Control limits are easily accessible via LIMs (QC Browser program).

9.8. Method Detection Limits (MDLs) and MDL Checks

9.8.1. MDLs and MDL Checks are established by the laboratory as described in SOPs CA-Q-S-006 and NC-QA-021.

9.8.2. MDLs are easily accessible via LIMs (QC Browser program).

9.9. General Corrective Action Requirements. The general requirements for evaluation of QC results and corrective action for failures is described in TestAmerica Policy QA-003. Ohio VAP projects must reference this SOP instead of Policy QA-003 for information on QC Samples.

9.10. Nonconformance and Corrective Action

9.10.1. Any deviations from QC procedures must be documented as a nonconformance with applicable cause and corrective action approved by the facility QA Manager. Procedural deviations are not allowed for Ohio VAP Projects.

10. CALIBRATION AND STANDARDIZATION

10.1. Instrument Startup. Set up the instrument according to manufacturers operating instructions. Allow the instrument to become thermally stable for at least 30 minutes before tuning.

10.2. Instrument Tuning / Mass Calibration / Daily Performance

10.2.1. Daily Performance. Refer to Appendix A for ICPM/MS Instrument Instructions. Instrument manuals are available as needed. Verify instrument performance daily with a solution containing elements representing all of the mass regions of interest. The relative standard deviations must be less than 5% after running the tuning solution a minimum of four times. For Method 200.8, the tuning solution must be analyzed five times with a relative standard deviation less than 5%. Tuning criteria is listed in Table IV.

10.2.2. Check mass calibration and resolution daily.

10.2.2.1. Mass Calibration Check. The mass calibration results must be within 0.1 amu from the true value. If this criterion is not met, the mass calibration must be adjusted before running samples.

10.2.2.2. Mass Resolution Check. The resolution must be verified to be less than 0.9 amu full width at 10% peak height.

10.3. Calibrate the instrument for the analytes of interest according to manufacturer's instructions. Routine calibration and calibration verification levels are shown in Table XI. The calibration should include a minimum of a blank and two standards. For a linear multi-point calibration curve, the correlation coefficient must be >/= 0.995. Report the average of at least two integrations for both calibration and sample analysis. A calibration must be performed daily and each time the instrument is set up. Instrument run may be continued over periods exceeding 24 hours as long as calibration verification, interference check, and internal standard QC criteria are met.

10.4. ICV/CCV/QCS. Calibration accuracy is verified at the beginning of each analytical run by analyzing a second-source initial calibration verification (ICV) standard. A continuing calibration verification (CCV) standard is analyzed at a 10% frequency throughout the run. The ICV must be within 10% of the expected value, or the analysis is terminated. The CCV must be within 10% of the expected value for Method 6020 or 15% of the expected value for Method 200.8. Sample results may only be reported when bracketed by valid CCVs. Table V provides a summary of quality control requirements including frequency, acceptance criteria, and corrective action.

Note: The only exception is if the CCV recoveries are biased high and the associated sample is ND for the parameter(s) of interest, the batch is acceptable. **This must be addressed in the project narrative.**

10.5. RL Verification Standard. An independent standard is analyzed after the ICV to monitor the lab's ability to produce reliable results at RL-level concentrations. There is no set acceptance criteria established for this standard, but generally results should be within 50% of the expected value. Individual program requirements may vary.

10.6. ICB/CCB/CB. The initial calibration blank must be analyzed immediately following the ICV. The continuing calibration blank must be analyzed at a frequency of 10% throughout the remainder of the analytical run. The ICB/CCB must fall within +/- the reporting limit from zero. Table V provides a summary of quality control requirements including frequency, acceptance criteria, and corrective action.

Note: The only exception is if the CCB recoveries are biased high and the associated sample is ND for the parameter(s) of interest, the batch is acceptable. **This must be addressed in the project narrative.**

10.7. Interference Check Solutions (ICSA/ICSAB) ***Method 6020 only***. The interference check solution is prepared with known concentrations of interfering elements so a determination may be made as to the magnitude of the interference on analytes of interest as well as a test of any software corrections. The required elements and their concentrations are listed in Table II. The interference check solutions must be analyzed at the beginning of every analytical run and every 12 hours thereafter. The results of solution "A" and solution "AB" must be monitored for possible interferences.

10.7.1. Control limits of spiked analytes in the ICSA/ICSAB solution are ± 50% of true value. Some projects may require control limits of ± 20% of true value. Control limits of non-spiked analytes are ± two times the reporting limit or less than 1 ug/L.

Note: It may not be possible to obtain absolutely clean ICSA/ICSAB standards. If contamination can be confirmed by another method (ICP/GFAA), acceptance criteria will be applied at that level and the data accepted.

10.8. Internal Standards. The intensities of all internal standards must be monitored throughout the run. The internal standard in the samples must be between 30% and 120% of the intensity of the calibration blank for Method 6020, and between 60% and 125% for Method 200.8. If the sample falls outside of this criteria, perform the following procedures. First, evaluate nearby CCVs and CCBs. If sample internal standard recoveries appear to be related to instrument drift, then rerun affected samples. If sample internal standard recoveries appear to be primarily sample or matrix related, the run will be evaluated to determine if a dilution is needed. If dilutions are needed, then perform appropriate dilutions until the internal standard recoveries are within the method criteria. In no case may sample results be reported with internal standard recoveries greater than 40% higher than recoveries in surrounding CCVs/CCBs. Alternately, the run may be reprocessed with an alternative internal standard that is not in the samples and at an appropriate mass for the masses being reported. See Table I for a list of Internal Standard analytes.

10.9. Serial Dilution ***Method 6020 only.*** One serial five-fold dilution must be analyzed per batch for each matrix. If the analyte concentration is within linear range of the instrument and sufficiently high (generally, a factor of 100 times above the reporting

limit), the serial dilution must agree within 10% of the original analysis. If not, an interference effect must be suspected, the result is flagged, and included in the final report narrative. Samples identified as blanks cannot be used for serial dilution.

10.10. Post-Digestion Spike Addition (PDS) ***Method 6020 only***. If the serial dilution fails to meet the acceptance criteria, a PDS must be performed as follows. An analytical spike added to a portion of a prepared sample, or its dilution, should be recovered within 75 - 125% of the known value. If the PDS fails to meet this criterion, matrix interference is suspected.

11. PROCEDURE

11.1. One-time procedural variations are allowed only if deemed necessary in the professional judgment of supervision to accommodate variation in sample matrix, chemistry, sample size, or other parameters. Any variation in procedure must be completely documented using a Nonconformance Memo and is approved by a Technical Specialist and QA Manager. The Nonconformance Memo must be filed in the project file.

11.2. Any unauthorized deviations from this procedure must also be documented as a nonconformance with a cause and corrective action described. Procedural deviations are not allowed for Ohio VAP projects.

11.3. Sample Preparation

11.3.1. Preliminary acid digestion is required for groundwater, aqueous samples, sludges, sediments, and other solid wastes for which total (acid-leachable) elements are requested. See SOPs NC-IP-010 and NC-IP-011 for preparation details.

11.3.2. For DoD work, refer to SOP NC-QA-016 for specific details.

11.4. Sample Analysis

11.4.1. Flush the system with the rinse blank for at least 30 seconds between samples and standards during the analytical run.

11.4.2. Masses which would affect the data quality must be monitored during the analytical run to determine the potential effects of matrix on a given element.

11.4.3. Dilute and re-analyze samples that are more concentrated than the linear range for an analyte or specific isotope of interest. The sample should be diluted to the approximate midrange of the analytical curve, unless the dilution is for internal standard recoveries.

11.4.4. The analytical run sequence must be performed as follows to meet all quality

control criteria:

Warm-up
Verify instrument performance
Calibration blank
Calibration standards
ICV
ICB
RL verification standard
ICSA (6020 Only)
ICSAB (6020 Only)
CCV
CCB
10 Samples
CCV
CCB

11.5. Analytical Documentation

11.5.1. Record all analytical information in the analytical logbook/logsheet, which may be in an electronic format, including the analytical data from standards, blanks, LCSs, MS/MSDs, and any corrective actions or modifications to the method.

11.5.2. All standards are logged into a department standard logbook. All standards are assigned a unique number for identification. Logbooks are reviewed by the supervisor or designee.

11.5.3. Documentation such as all associated instrument printouts (final runs, screens, reruns, QC samples, etc.) and daily calibration data corresponding to all final runs is available for each data file.

11.5.4. Sample results and associated QC are entered into the LIMs after final technical review.

12. DATA ANALYSIS AND CALCULATIONS

Note: The mean of three exposures is used to derive the sample concentrations used in the calculations in this section.

12.1. ICV percent recoveries are calculated according to the equation:

$$\%R = \mathbf{100 \times \left(\frac{Found\ (ICV)}{True\ (ICV)} \right)}$$

12.2. CCV percent recoveries are calculated according to the equation:

$$\%R = \mathbf{100 \times \left(\frac{Found\ (CCV)}{True\ (CCV)} \right)}$$

12.3. Matrix Spike Recoveries are calculated according to the following equation:

$$\%R = \mathbf{100 \times \left(\frac{SSR - SR}{SA} \right)}$$

Where:
SSR = Spike Sample Result
SR = Sample Result
SA = Spike Added

Note: When sample concentration is less than the method detection limit, use SR = 0 for purposes of calculating % Recovery.

12.4. The relative percent difference (RPD) of sample duplicates are calculated according to the following equation:

$$RPD = \mathbf{100 \times \left[\frac{(DU1 - DU2)}{(DU1 + DU2) / 2} \right]}$$

Where:
DU1 = Sample result
DU2 = Sample duplicate result

12.5. The final concentration for an aqueous sample is calculated as follows:

$$\text{Result (ug/L)} = \mathbf{\frac{(C \times V1 \times D)}{V2}}$$

Where:
C = Concentration from instrument readout, ppb (mean of three exposures)
D = Instrument dilution factor
V1 = Final volume in liters after sample preparation
V2 = Initial volume of sample digested in liters

12.6. The concentration determined in digested solid samples when reported on a wet weight basis is as follows:

$$\text{Result (ug/kg)} = \frac{\mathbf{(C \times V \times D)}}{\mathbf{W}}$$

Where:

C = Concentration from instrument readout, ppb (mean of three exposures)
D = Instrument dilution factor
V = Final volume in liters after sample preparation
W = Weight, in g, of wet sample digested

12.7. Additional equations and calculations are listed in the following SOPs: Calibration Curves (General), CA-Q-S-005, and Selection of Calibration Points, CA-T-P-002.

13. METHOD PERFORMANCE

13.1. Each laboratory must have initial demonstration of performance data on file and corresponding method detection limit files.

13.2. Refer to Table VII for the list of analytes that may be analyzed using this SOP for Methods 6020 and 200.8. Additional analytes may be analyzed if all method-required QC is acceptable.

13.3. Training Qualifications

13.3.1. The Group/Team Leader has the responsibility to ensure that this procedure is performed by an associate who has been properly trained in its use and has the required experience.

14. POLLUTION PREVENTION

14.1. It is TestAmerica's policy to evaluate each method and look for opportunities to minimize waste generated (i.e., examine recycling options, ordering chemicals based on quantity needed, preparation of reagents based on anticipated usage, and reagent stability). Employees must abide by the policies in Section 13 of the Corporate Environmental Health and Safety Manual (CW-E-M-001) for "Waste Management and Pollution Prevention".

15. WASTE MANAGEMENT

15.1. All waste will be disposed of in accordance with Federal, State and Local regulations. Where reasonably feasible, technological changes have been implemented to minimize the potential for pollution of the environment. Employees will abide by this method and

the policies in Section 13 of the Corporate Environmental Health and Safety Manual (CW-E-M-001) for "Waste Management and Pollution Prevention".

15.2. Solid materials (gloves, soiled paper products, etc.) are placed in the solid debris container. Do not put liquids in the solid waste container.

15.3. Laboratory personnel assigned to perform hazardous waste disposal procedures must have a working knowledge of the established procedures and practices of TestAmerica. They must have training on the hazardous waste disposal practices upon initial assignment to these tasks followed by an annual refresher training.

15.4. Waste Streams Produced by the Method

15.4.1. Acid waste consisting of sample and rinse solution generated by this method.

15.4.1.1. Aqueous waste can be poured down the drain if the pH is between 5 and 10. Any sample waste generated that is not in this pH range must be collected and disposed of in the acid waste drum located in the metals lab.

16. REFERENCES

16.1. References

16.1.1. Test Methods For Evaluating Solid Waste, EPA SW-846, 3rd Edition, Final Update II, Method 6020: "Inductively Coupled Argon Plasma - Mass Spectrometry", Revision 0, September 1994

16.1.2. Environmental Monitoring Systems Laboratory, EPA Method 200.8, "Determination of Trace Elements in Waters and Wastes by Inductively Coupled Plasma - Mass Spectrometry", Revision 5.4, EMMC version

16.1.3. TestAmerica North Canton Quality Assurance Manual (QAM), current version

16.1.4. TestAmerica Corporate Environmental Health and Safety Manual, CW-E-M-001 (changed from M-E-0001), and TestAmerica North Canton Facility Addendum and Contingency Plan, current version

16.1.5. Revision History

Historical File:		Revision 0: 08/01/95		Revision 4.2: 01/08/04
		Revision 1: 06/06/01		Revision 4.3: 07/28/07
		Revision 3: 03/26/02		Revision 4.4: 07/30/08
		Revision 4: 03/06/03		

		Revision 4.1: 10/01/03		

16.2. Associated SOPs and Policies, current version

16.2.1. QA Policy, QA-003

16.2.2. Acid Digestion of Soils, SW846 Method 3050B, NC-IP-010

16.2.3. Acid Digestion of Aqueous Samples by SW846 and MCAWW 200 Series Methods, NC-IP-011

16.2.4. Glassware Washing, NC-QA-014

16.2.5. Statistical Evaluation of Data and Development of Control Charts, NC-QA-018

16.2.6. Method Detection Limits and Instrument Detection Limits, NC-QA-021 and CA-Q-S-006

16.2.7. Supplemental Practices for DoD Project Work, SOP NC-QA-016

16.2.8. Standards and Reagents, NC-QA-017

16.2.6. Selection of Calibration Points, CA-T-P-002

16.2.7. Calibration Curves (General), CA-Q-S-005

17. MISCELLANEOUS (TABLES, APPENDICES, ETC.)

17.1. Reporting limits

17.1.1. Refer to Table VII for associated reporting limits.

17.1.2. If samples require dilution or smaller volumes than specified in this method, the RL will be elevated.

17.2. Method Deviations

17.2.1. Deviations from Method 6020

17.2.1.1. Commercially available standards are purchased and verified at the laboratory rather than being prepared from the solid material. These verification records are kept in the laboratory.

17.2.1.2. The results of the calibration blank as well as all other blanks must be less than the reporting limit--not three times the instrument IDL.

17.2.1.3. Milli-Q or Nanopure water is substituted when reagent water is called for. This water is tested to be free of contaminants by the analysis of blanks.

17.2.1.4. Internal standard recoveries may be less than 80% in CCVs and CCBs as long as QC criteria are met. Sample internal standard recoveries may never be greater than 40% higher than recoveries in associated CCVs/CCBs.

17.2.2. Deviations from Method 200.8

17.2.2.1. Commercially available standards are purchased and verified at the laboratory rather than being prepared from the solid material. These verification records are kept in the laboratory.

17.2.2.2. The results of the calibration blank as well as all other blanks must be less than the reporting limit--not three times the instrument IDL.

17.2.2.3. Milli-Q or Nanopure water is substituted when reagent water is called for. This water is tested to be free of contaminants by the analysis of blanks.

17.2.2.4. Resolution criteria of the mass calibration is met if the resolution criteria for Method 6020 is satisfied.

17.2.2.5. The concentration of most analytes in the LCS is 100 µg/L. This is made from a commercially available stock solution and has all analytes at the same level. Verification records for this solution are kept in the laboratory.

17.2.2.6. Results are reported up to the verified linear range--not up to only 90% of the linear range.

Company Confidential & Proprietary

Table I: Recommended Internal Standards

Li
Sc
Y
Rh
In
Tb
Ho
Bi
Ge

Table II: Interference Check Sample Components and Recommended Concentrations

Interference Component	**Solution A Concentration (mg/L)**	**Solution AB Concentration (mg/L)**
Al	50	50
Ca	50	50
Fe	50	50
Mg	50	50
Na	50	50
P	50	50
K	50	50
S	50	50
C	100	100
Cl	500	500
Mo	1.0	1.0
Ti	1.0	1.0
As	0.0	0.1
Cd	0.0	0.1
Cr	0.0	0.1
Co	0.0	0.1
Cu	0.0	0.1
Mn	0.0	0.1
Ni	0.0	0.1
Se	0.0	0.1
Ag	0.0	0.1
V	0.0	0.1
Zn	0.0	0.1

Company Confidential & Proprietary

Table III: Tuning Solution

A tuning solution containing elements representing all of the mass regions of interest must be analyzed. Below are two groups of suggested solutions which cover a typical mass calibration range.

Element	Concentration (µg/L)
Mg	10
Rh	10
Pb	10
Li	10
Co	10
In	10
Tl	10

Element	Concentration (µg/L)
Be	10
Mg	10
Co	10
In	10
Pb	10
Ba	10
Ce	10

Company Confidential & Proprietary

Table IV: Suggested Tuning and Response Factor Criteria Minimum Response from Tuning Solution

Minimum Response from Tuning Solution With a Peristaltic Pump Speed of 40 RPM

Be	> 8,000
In	>300,000
Pb	> 100,000
Co	> 100,000
Mg	> 10,000

Suggested Mass Calibration

Be	9.0122
Mg	23.98
Rh	102.91
Pb	207.98
Li	7.016
Co	58.9332
In	114.904
Tl	204.9744

Company Confidential & Proprietary

Table V: Summary of Quality Control Requirements

QC Parameter	Frequency	Acceptance Criteria	Corrective Action
ICV/QCS	Beginning of every analytical run	90 - 110% recovery	Terminate analysis; correct the problem; recalibrate
ICB/CB	Immediately after each ICV	The result must be < RL	Terminate analysis; correct the problem; recalibrate
CCV	Beginning and end of run and every 10 samples	**6020:** 90 - 110% recovery **200.8:** 85-115% recovery	If unacceptable, correct the problem, recalibrate the instrument, reverify calibration, and rerun all samples associated with unacceptable CCVs.
CCB	Immediately following each CCV	The result must be < RL	If unacceptable, correct the problem, recalibrate the instrument, reverify calibration, and rerun all samples associated with unacceptable CCBs.
ICSA (6020 Only)	Beginning and every 12 hours	Monitor for possible interferences	See Section 9.12
ICSAB (6020 Only)	Immediately following each ICSA	Monitor for possible interferences	See Section 9.12
Method Blank/Lab Reagent Blank	One per lot of 20 field samples or fewer	The result must be < RL Sample results greater than 20x the blank concentration or samples for which the contaminant is < RL, do not require redigestion or reanalysis.	Redigest and reanalyze samples See Section 9.3 for additional requirements
Laboratory Control Sample/Lab Fortified Blank	One per lot of 20 field samples or fewer	80-120%, or in-house limits (6020), 85-115% (200.8)	Redigest and reanalyze samples See Section 9.4
Serial Dilution (6020 Only)	One per lot of 20 field samples or fewer	90 – 110% recovery	See section 9.14 for additional requirements
Post-Digestion Spike (6020 Only)	See Section 9.15	75 - 125% recovery	See section 9.15
Matrix Spike/Matrix Spike Duplicate	One per lot of 20 field samples or fewer	Must be within laboratory control limits	See section 9.5 for additional requirements

Company Confidential & Proprietary

Table VI: ICP/MS Calibration and Calibration Verification Checklist
Suggested Levels in µg/L

Element	Calibration		ICV	CCV
	1	2		
Aluminum	500	1000	400	500
Antimony	100	200	80	100
Arsenic	100	200	80	100
Barium	100	200	80	100
Beryllium	100	200	80	100
Boron	100	200	80	100
Cadmium	100	200	40000	50000
Calcium	50000	100000	40000	50000
Chromium	100	200	80	100
Cobalt	25000	50000	80	100
Copper	100	200	80	100
Iron	500	1000	20000	25000
Lead	100	200	80	100
Manganese	50000	10000	400	500
Magnesium	50000	100000	40000	50000
Molybdenum	100	200	80	100
Nickel	100	200	80	100
Potassium	100	200	40000	50000
Selenium	50000	100000	80	100
Sodium	100	200	40000	50000
Silver	100	200	80	100
Strontium	100	200	80	100
Thallium	100	200	80	100
Tin	100	200	80	100
Titanium	100	200	80	100
Tungsten	100	200	80	100
Vanadium	100	200	80	100
Zinc	100	200	80	100

This procedure has been developed for additional elements. Additional elements may be included in the calibration solution at the appropriate levels. Levels may be adjusted to meet specific regulatory or client programs.

Company Confidential & Proprietary

Table VII: Suggested ICP/MS Reporting Limits

Water 6020 and 200.8 Solid 6020 (only)

Compound	RL	Units	RL	Units
Aluminum	50	ug/L	5000	ug/kg
Antimony	2	ug/L	200	ug/kg
Arsenic	5	ug/L	500	ug/kg
Barium	5	ug/L	500	ug/kg
Beryllium	1	ug/L	100	ug/kg
Boron	15	ug/L	1500	ug/kg
Cadmium	1	ug/L	100	ug/kg
Calcium	1000	ug/L	100000	ug/kg
Chromium	2	ug/L	200	ug/kg
Cobalt	1	ug/L	100	ug/kg
Copper	5	ug/L	500	ug/kg
Iron	50	ug/L	5000	ug/kg
Lead	1	ug/L	100	ug/kg
Magnesium	1000	ug/L	100000	ug/kg
Manganese	5	ug/L	500	ug/kg
Molybdenum	2	ug/L	200	ug/kg
Nickel	2	ug/L	100	ug/kg
Potassium	1000	ug/L	100000	ug/kg
Selenium	5	ug/L	500	ug/kg
Silver	1	ug/L	100	ug/kg
Sodium	1000	ug/L	100000	ug/kg
Strontium	10	ug/L	1000	ug/kg
Thallium	1	ug/L	100	ug/kg
Tin	10	ug/L	1000	ug/kg
Titanium	10	ug/L	1000	ug/kg
Tungsten	10	ug/L	1000	ug/kg
Vanadium	5	ug/L	500	ug/kg
Zinc	10	ug/L	1000	ug/kg

Company Confidential & Proprietary

APPENDIX A

OPERATION INSTRUCTION – ICPMS INSTRUCTIONS

Procedure

1. Instrument Set-up

1.1 Configure the X Series with the standard sample introduction equipment, i.e., a glass concentric nebulizer, glass impact bead spray chamber, and a one-piece torch with 1.5mm ID injector tube. A Peltier spray chamber-cooling unit is optional. Ensure the Xi interface cones are fitted. They can be identified as follows:

- Xi Sampler - 1.1 mm orifice, no nipple, no holes around the flat circumference
- Xi Skimmer - Small pointed skimmer mounted in a copper adapter with two screws

1.3 Switch the instrument into the *Operate* state by clicking the *ON* button at the top of the screen. During the automated ignition sequence, the following processes occur:

- Torch purge with argon gas
- RF power match
- Plasma ignition
- Slide valve open
- Electronics on

This process takes about two minutes. Upon successful ignition, the software will display *Operate* in the *Instrument State* bar. In the event of unsuccessful ignition, the software will display an error message and/or place a message in the *Technician Event Log*. Upon unsuccessful ignition, inspect the sample introduction equipment and torch, ensuring a good gas-seal at each connection and ensuring the torch is not misaligned or damaged. If all appears satisfactory, the ignition may be attempted again. If the ignition process consistently fails, contact your local service agent for advice.

1.4 Once the instrument is in the *Operate* state, it must be left for 30 minutes to reach thermal equilibrium prior to starting analytical measurements. The optimization (tuning), performance testing, and instrument set-up calibrations may be performed after 15 minutes. Ensure the peristaltic pump is operated at a default analytical speed of 40%. This is done by clicking on *Instrument*, *Configurations*, *Configuration Editor*, *View Selected Accessories* (network icon), *Peristaltic Pump*, *Connect* (chain icon). Set pump speed to 40% using the slider bar. Click *OK* to close the dialogue box.

1.5 During the initial 15 minutes, the system can be "conditioned" by aspirating the system thoroughly with 5% HCL and 2% nitric acid solution prior to continuing.

1.6 Instrument tuning (optimization) is performed using a 20 µg/L Tune Solution aspirated through the sample uptake tube. Optimization may not be necessary from day to day if the sample introduction system and cones have not been adjusted in any way, and if the instrument fulfills the performance requirements given below. Tune the instrument manually or use *Autotune* while aspirating a 20 µg/L Tune Solution with the sample uptake probe in the tune solution and the internal standard probe in a 5%HCL and 2%HNO3 solution. *Autotune*, using an appropriately defined sequence, is advised. If the CCT gas mode is being used, along with the standard mode for particular elements, both the CCT gas and the standard mode will need to be tuned. See Tables III and IV for additional tuning information.

If the above criteria are not met, do not proceed. Check that the tune solution was prepared as per instructions, and remake, if necessary. If the sensitivity is below the minimum requirement, a new detector plateau may be required, the cones may require cleaning, or the nebulizer or sample uptake lines may have become blocked, or may not be properly clamped on the peristaltic pump. If the CeO/Ce ratio is 0.03, the nebulizer gas flow can be reduced and/or the sampling depth increased, obtaining a corresponding reduction in oxide formation. Recheck the above parameters after taking any remedial action.

1.7 Save the satisfactory instrument settings by clicking on the disk icon on the Tune page. Note this is not necessary if *Autotune* has been used, as the instrument settings are saved automatically (unless manual adjustments have been made after autotuning).

1.8 Perform a cross-calibration (and mass-calibration and detector voltage setup, if required). Note: Retuning may be necessary after performing this routine.

1.9 Aspirate Tune solution and run a *Performance Report* to confirm the mass-calibration, resolution, minimum sensitivity, and maximum cerium oxide requirement, and to verify instrument stability. The performance report acquires five consecutive one-minute runs and calculates the percentage relative standard deviation (RSD) of the five measurements for each isotope. The RSD of the elemental analytes in the performance report must be < 5%. If the performance report fails, check:

- Liquid uptake tubes for kinks or other damage
- Condition and position of the peristaltic pump tubing
- Tightness of the peristaltic pump clamp screws (these must be just tight enough to draw liquid through the tube smoothly)
- Joints of all sample introduction components, ensuring a good seal
- Nebulizer for blockage

- Salt deposition on cones

Remedy the above as necessary, and repeat the test. Note: Retuning may be required if any sample introduction components are adjusted or replaced.

If the measured mass position for each mass in the performance report is not within ± 0.1 amu of the nominal mass position, a new mass calibration must be performed.

2. Sample Analysis

2.1 Open the method template by clicking on *Templates* and then <Test America North Canton Multimode>. The method template will be opened. This contains all the saved analytical parameters, and only the sample list need be amended.

2.2 Go to *Sample List*. This grid contains all the information about calibration, QC, and samples to be analyzed. The calibration and QC concentration information are already stored. Enter all unknown samples into the list in the appropriate order below the existing calibration and QC samples by overwriting the sample label fields. Delete any QC samples that do not apply to the required method. (If sample list changes are to be made permanent to the method, save the method as a *Template* by going to *File*, *Save As Template.* Enter a new name to create an amended method, or use the same name to overwrite the current one.)

2.3 Once all the sample information is added, check that the required autosampler positions have been correctly entered. Amend as necessary. To sequentially renumber positions, add the correct position required for the initiation of the sequence and right mouse click on the first correctly numbered cell. A pop-up menu will appear. Select *Renumber autosampler positions* from this. Ensure all samples have one survey run and three main runs.

2.4 Save the experiment run by clicking on the *File* menu, then *Save As*. Enter the required file name, e.g., 100107, and click *Save.*

2.5 To print the sample list, go to *Reports,* and check the *Sample List* box. Click the refresh icon. The sample list will be displayed in a printable format. Press the print icon.

3. Loading the Autosampler

3.1 Pour the required samples into pre-cleaned 15 mL polypropylene test tubes. To avoid contamination, a small amount of the solution to be analyzed can be poured into the tube and then discarded. This will rinse out any residual contamination.

3.2 Pour blanks, standards, and QCs (positioned in rack 0) into pre-cleaned 50 mL polypropylene tubes. To avoid contamination, a small amount of the solution to be

analyzed can be poured into the tube and then discarded. This will rinse out any residual contamination. Note that 5 % HCL and 2% nitric acid is used as the calibration blank, ICB, and CCB.

3.3 Place the tubes for each sample into the appropriate position in the rack according to the sample list. Note that the autosampler works on a two-dimensional grid position system by rack number (0-4).

4. Initiating Analysis

4.1 Place the sample probe into the autosampler arm and the internal standard probe into the internal standard solution.

4.2 Go to *Instrument*, *Tune*, and click on the accessories dialog icon. Click on *Autosampler*, and then on the chain icon to connect. The autosampler should initialize. Ensure the probe is at the correct height by positioning it so its tip just protrudes through the hole in the bottom of the arm. Click on the *Go to Wash* icon (faucet) to send the probe to the wash station. Ensure the wash solution is being correctly delivered to the wash station via the peristaltic pump at the rear of the autosampler. Allow at least two minutes for the liquid to be delivered to the sample introduction system.

4.3 Click on the experiment to be run. Click the *Queue* icon, then *Append*, and *OK*. The analysis has now been initiated.

4.4 To monitor the progress of the analysis, right-mouse click on the *MS* icon at the bottom-right of the screen and select *Open Service Window* from the pop-up menu. The Service Window hovers over the current application window until moved or closed and displays the current instrument activity. This window is also used **to stop an analysis,** if required. This is done by clicking on the ***XQ* icon**.

4.5 To view results as they are generated, click on the experiment icon and go to the *Results* tab. Click on the *Refresh* button or the refresh icon (green circular arrows on a page) to calculate the results from the data obtained.

4.6 To view calibration plots, click on the *Calibration Data* tab. The calibration for each analyte can be viewed by clicking on the required isotope in the *Analyte* box. Each subsequent set of calibrations (calibration block) can be displayed by selecting the required calibration block from the drop-down combo box, e.g., *FQ Block 1*, *FQ Block 2*, etc. FQ denotes a Fully-Quantitative calibration, and SQ denotes a Semi-Quantitative calibration, i.e., a response curve generated from the *FQ* calibrations. The SQ response curve is used to calculate semi-quantitative concentrations if required.

4.7 To view data, click on the *Numerical Results* tab. The *Analyte Dilution Conc.* tab is a tabular display of the calculated corrected concentrations for each analyte. These values

have been corrected for internal standardization, external drift correction (if used), and dilution (where entered). The *Mass Uncorrected ICPS* tab shows the uncorrected raw data for each measured mass in units of integrated counts per second (ICPS). The *Analyte ICPS* tab shows integrated counts per second data that has been mathematically corrected for blank deduction, internal standardization, drift correction (if used), and dilution (as appropriate). The *Survey* tabs show the data integrated from the survey scan for each sample. Any concentrations displayed in the survey page will be semi-quantitative only.

4.8 To edit the amount of data on screen (filter the results display), click on the filter icon (funnel and lightening). Alter the numerical values or the check boxes to select the required data to display, and click on *OK*. To jump directly to a particular sample of interest, find the sample in the drop-down combo box at the top of the data display, and click on it.

4.9 To display mass-spectra, click on the *Spectra* tab. Display the spectrum for a particular sample by double-clicking on the sample name in the selection box on the left of the screen. Note several spectra may be overlaid by double-clicking on each sample to be displayed. To zoom into a particular area, click the zoom icon (magnifying glass), and click and drag on the spectral display to zoom into the required area. The dashed-lines represent data acquired in the analogue mode of the detector whilst the solid-lines represent pulse-count data. To remove the noise associated with analogue detection at low signal levels, point at the display and right-mouse click to bring up a menu. Go to *View Options*, and then click on *Eliminate Analogue Noise.* To identify a peak, click on it and wait for the options for that mass to be displayed in the box above the spectral display. To fingerprint a spectrum, double-click on the species to fingerprint in the options box. This will overlay the isotopic pattern for the selected species, based on the lowest relative intensity signal for the pattern masses. The spectra may be navigated by using the arrow buttons above the display. Allow the arrow cursor to hover over each button for an on-screen explanation of its function.

5. Post-Analysis Data Processing

5.1 Internal Standards

- Check the internal standard recovery percentage for each internal standard isotope used for every sample. The percentage for each isotope must be within the range 30 - 120% for Method 6020 and 60 – 125% for Method 200.8.

- If above 120%, check that the other internal standard isotopes show similar deviation. If not, this may be due to the presence of the internal standard element in the sample. This is particularly common with the isotopes of Li, Sc, and Y in environmental materials. If this is the case, the affected internal standard isotope may be excluded for the sample affected as follows. Go to the *Sample List*.

- Find the sample affected, and select it in the list by clicking on the box in the left-hand column. Click *Show Advanced*, and go to *Internal Standards*. Click on *New Internal Standard Set*. Select the affected isotope(s) in the *Internal Standards* box on the right. Remove the affected isotope from the *Internal Standards* box by using the left-hand arrow button (<<). Recalculate the results for this sample by going back to *Results*, and clicking on *Refresh*.

- If any internal standard isotope is outside the range 30-120% and all other internal standard isotopes show similar values for that sample, the instrument may have drifted; or the sample may be producing a suppression or enhancement effect. Find the nearest blank following the sample in question and check its internal standard results. If these are similarly reduced or elevated, the instrument has drifted, and the samples must be re-analyzed from the last compliant blank. If the blank does not exhibit similar drift, the sample must be producing a suppression or enhancement effect due to its matrix. In this case, the sample must be re-analyzed after a five-fold (1:5) or a ten-fold (1:10) dilution to reduce the matrix effect.

6. General protocols

6.1 One-time procedural variations are allowed only if deemed necessary in the professional judgment of supervision to accommodate variation in sample matrix, chemistry, sample size, or other parameters. Any variation in procedure must be completely documented using a Nonconformance Memo and is approved by a Technical Specialist and QA Manager. The Nonconformance Memo must be filed in the project file.

6.2 Any unauthorized deviations from this procedure must also be documented as a nonconformance with a cause and corrective action described.

6.3 An analytical run will consist of all customer samples and quality control samples analyzed under a daily initial calibration. Each new initial calibration will begin a new analytical run.

6.4 Type in the QC and sample information into the autosampler table.

7. Initial Calibration

7.1 Open a new dataset using the date of analysis as the file name.

7.2 Open the appropriate method if one already exists, or create a new one for the analytes to be quantitated in the run. Solicit the assistance of a senior ICP-MS operator in creating a new method.

7.3 All masses which could affect data quality should be monitored to determine potential interferences, either simultaneously during an analytical run, or in a separate scan.

7.4 Internal standards are added to all standards and samples by the instrument prior to analysis.

7.5 Use of an existing autosampler table is suggested.

7.6 Calibration consists of a blank and and two calibration standards in accordance with the manufacturer's procedure. Use the average of three integrations for both calibration and sample analyses.

8. The order of analysis for the initial QC samples and calibration should be:

STD1 (Calibration Blank)
STD2 (Calibration Standard)
STD3 (Calibration Standard)
STD4 (Calibration Standard)
ICV
ICB
CRI (Reporting Limit Verification Standard)
ICSA (Interference check solution)
ICSAB (Interference check solution)
CCV
CCB
Prep QC such as LCS or MB, followed by samples (up to 10)
Rinse
CCV
CCB

To continue the analytical run, add an additional ten runs followed by a rinse and CCV/CCB.

Title: PREPARATION AND ANALYSIS OF MERCURY IN SOLIDSAMPLES BY COLD VAPOR ATOMIC ABSORPTION SPECTROSCOPY

[Method: SW846 7471A]

Approvals (Signature/Date):

Technology Specialist	1/2/09 Date	Health & Safety Coordinator	1/02/09 Date
Quality Assurance Manager	1/2/09 Date	Laboratory Director	12/31/08 Date
Technical Director	12/31/08 Date		

This SOP was previously identified as SOP NC-MT-011, Rev 0, dated 12/12/07

Copyright Information:
This documentation has been prepared by TestAmerica Analytical Testing Corp. and its affiliates ("TestAmerica"), solely for their own use and the use of their customers in evaluating their qualifications and capabilities in connection with a particular project. The user of this document agrees by its acceptance to return it to TestAmerica upon request and not to reproduce, copy, lend, or otherwise disclose its contents, directly or indirectly, and not to use if for any other purpose other than that for which it was specifically provided. The user also agrees that where consultants or other outside parties are involved in the evaluation process, access to these documents shall not be given to said parties unless those parties also specifically agree to these conditions.

THIS DOCUMENT CONTAINS VALUABLE CONFIDENTIAL AND PROPRIETARY INFORMATION. DISCLOSURE, USE OR REPRODUCTION OF THESE MATERIALS WITHOUT THE WRITTEN AUTHORIZATION OF TESTAMERICA IS STRICTLY PROHIBITED. THIS UNPUBLISHED WORK BY TESTAMERICA IS PROTECTED BY STATE AND FEDERAL LAW OF THE UNITED STATES. IF PUBLICATION OF THIS WORK SHOULD OCCUR, THE FOLLOWING NOTICE SHALL APPLY: ©COPYRIGHT 2008 TESTAMERICA ANALYTICAL TESTING CORP. ALL RIGHTS RESERVED.

Facility Distribution No. _____ **Distributed To:** _____

TABLE OF CONTENTS

1. SCOPE AND APPLICATION 3

2. SUMMARY OF METHOD 3

3. DEFINITIONS 3

4. INTERFERENCES 3

5. SAFETY 4

6. EQUIPMENT AND SUPPLIES 6

7. REAGENTS AND STANDARDS 7

8. SAMPLE COLLECTION, PRESERVATION, AND STORAGE 9

9. QUALITY CONTROL 9

10. CALIBRATION AND STANDARDIZATION 12

11. PROCEDURE 13

12. DATA ANALYSIS AND CALCULATIONS 16

13. METHOD PERFORMANCE 18

14. POLLUTION PREVENTION 18

15. WASTE MANAGEMENT 18

16. REFERENCES 18

17. MISCELLANEOUS (TABLES, APPENDICES, ETC.) 19

LIST OF APPENDICES

APPENDIX A – TABLES 20

APPENDIX B - CONTAMINATION CONTROL GUIDELINES 24

APPENDIX C – INSTRUMENT SETUP 25

Company Confidential & Proprietary

1. SCOPE AND APPLICATION

1.1. This procedure describes the preparation and analysis of mercury (Hg, CAS # 7439-97-6) by Cold Vapor Atomic Absorption Spectroscopy (CVAA) using SW846 Method 7471A.

1.2. The associated LIMs method code is O9.

1.3. CVAA analysis provides for the determination of total mercury (organic and inorganic). The combination of the oxidants and potassium permanganate has been found to give 100% recovery with both types of compounds. Detection limits, sensitivity, and optimum concentration ranges for mercury analysis will vary with the matrices, instrumentation, and volume of sample used.

1.4. Method 7471A is applicable to the preparation and analysis of mercury in soils, sediments, bottom deposits, wastes, wipes, and sludge-type materials. All matrices require sample preparation prior to analysis.

1.5. The TestAmerica North Canton reporting limit for mercury in solid matrices is 0.1 mg/kg.

2. SUMMARY OF METHOD

2.1. This SOP describes a technique for the determination of mercury in solution. The procedure is a physical method based on the absorption of radiation at 253.7 nm by mercury vapor. A representative portion of the sample is digested in hydrochloric and nitric acids. Organic mercury compounds are oxidized with potassium permanganate and the mercury reduced to its elemental state with stannous chloride and aerated from solution in a closed system. The mercury vapor passes through a cell positioned in the light path of an atomic absorption spectrophotometer. Absorbance is measured as a function of mercury concentration. Concentration of the analyte in the sample is determined by comparison of the sample absorbance to the calibration curve (absorbance vs. concentration).

3. DEFINITIONS

3.1. Refer to the glossary in the TestAmerica North Canton Qualtiy Assurance Manual (QAM), current version.

4. INTERFERENCES

4.1. Chemical and physical interferences may be encountered when analyzing samples using this method.

4.2. Potassium permanganate, which is used to break down organic mercury compounds, also

eliminates possible interferences from sulfide. Concentrations as high as 20 mg/L of sulfide as sodium sulfide do not interfere with the recovery of inorganic mercury from reagent water.

4.3. Copper has also been reported to interfere; however, copper concentrations as high as 10 mg/L had no effect on the recovery of mercury from spiked samples.

4.4. Chlorides can cause a positive interference.

4.5. Interference from certain volatile organic materials that absorb at this wavelength may also occur. If suspected, a preliminary run without stannous chloride can determine if this type of interference is present. While the possibility of absorption from certain organic substances present in the sample does exist, this problem is not routinely encountered. This is mentioned only to caution the analyst of the possibility. If this condition is found to exist, the mercury concentration in the sample can be determined by subtracting the result of the sample run without the reducing reagent (stannous chloride) from that obtained with the reducing reagent.

4.6. Samples containing high concentrations of oxidizable organic materials, as evidenced by high COD levels, may not be completely oxidized by this procedure. When this occurs, the recovery of mercury will be low. The problem can be eliminated by reducing the volume of original sample used.

4.7. The most common interference is laboratory contamination which may arise from impure reagents, dirty glassware, improper sample transfers, dirty work areas, etc. Be aware of potential sources of contamination and take appropriate measures to minimize or avoid them. All glassware is cleaned per SOP NC-QA-014. Refer to Appendix B for Contamination Control Guidelines.

5. SAFETY

5.1. Employees must abide by the policies and procedures in the Corporate Environmental Health and Safety Manual and this document.

5.2. Samples that contain high concentrations of carbonates or organic material or samples that are at elevated pH can react violently when acids are added.

5.3. The following is a list of the materials used in this method, which have a serious or significant hazard rating. NOTE: This list does not include all materials used in the method. The table contains a summary of the primary hazards listed in the MSDS for each of the materials listed in the table. A complete list of materials used in the method can be found in the Reagents and Standards section. Employees must review the information in the MSDS for each material before using it for the first time or when there are major changes to the MSDS.

Material (1)	Hazards	Exposure Limit (2)	Signs and symptoms of exposure
Mercury (1,000 PPM in Reagent)	Oxidizer Corrosive Poison	0.1 Mg/M3 Ceiling (Mercury Compounds)	Extremely toxic. Causes irritation to the respiratory tract. Causes irritation. Symptoms include redness and pain. May cause burns. May cause sensitization. Can be absorbed through the skin with symptoms to parallel ingestion. May affect the central nervous system. Causes irritation and burns to eyes. Symptoms include redness, pain, and blurred vision; may cause serious and permanent eye damage.
Nitric Acid	Corrosive Oxidizer Poison	2 ppm-TWA 4 ppm-STEL	Nitric acid is extremely hazardous; it is corrosive, reactive, an oxidizer, and a poison. Inhalation of vapors can cause breathing difficulties and lead to pneumonia and pulmonary edema, which may be fatal. Other symptoms may include coughing, choking, and irritation of the nose, throat, and respiratory tract. Can cause redness, pain, and severe skin burns. Concentrated solutions cause deep ulcers and stain skin a yellow or yellow-brown color. Vapors are irritating and may cause damage to the eyes. Contact may cause severe burns and permanent eye damage.
Hydrochloric Acid	Corrosive Poison	5 PPM-Ceiling	Inhalation of vapors can cause coughing, choking, inflammation of the nose, throat, and upper respiratory tract, and in severe cases, pulmonary edema, circulatory failure, and death. Can cause redness, pain, and severe skin burns. Vapors are irritating and may cause damage to the eyes. Contact may cause severe burns and permanent eye damage.
Hydroxyl-amine Hydro-chloride	Corrosive Poison	None	Extremely destructive to tissues of the mucous membranes and upper respiratory tract. Corrosive to the eyes. Irritant and possible sensitizer. May cause burns to the skin.
Potassium Permanganate	Oxidizer	5 Mg/M3 for Mn Compounds	Causes irritation to the respiratory tract. Symptoms may include coughing, shortness

			of breath. Dry crystals and concentrated solutions are caustic causing redness, pain, severe burns, brown stains in the contact area and possible hardening of outer skin layer. Diluted solutions are only mildly irritating to the skin. Eye contact with crystals (dusts) and concentrated solutions causes severe irritation, redness, and blurred vision and can cause severe damage, possibly permanent.
1 – Always add acid to water to prevent violent reactions.			
2 – Exposure limit refers to the OSHA regulatory exposure limit.			

5.4. Eye protection that protects against splash, laboratory coat, and appropriate gloves must be worn while samples, standards, solvents, and reagents are being handled. Cut resistant gloves must be worn doing any other task that presents a strong possibility of getting cut. Disposable gloves that have been contaminated must be removed and discarded; other gloves must be cleaned immediately.

5.5. Exposure to chemicals must be maintained **as low as reasonably achievable.** All samples with stickers that read "Caution/Use Hood!" **must** be opened in the hood. Contact the EH&S Coordinator if this is not possible. Solvent and waste containers must be kept closed unless transfers are being made.

5.6. All work must be stopped in the event of a known or potential compromise to the health and safety of a TestAmerica North Canton associate. The situation must be reported **immediately** to the EH&S Coordinator and the Laboratory Supervisor.

5.7. Do not look directly into the beam of the Hg lamp. The UV light that these lamps radiate is harmful to the eyes.

5.8. Cylinders of compressed gas must be handled with caution in accordance with local regulations. It is recommended that, wherever possible, cylinders be located outside the laboratory, and the gas led to the instrument through approved lines.

5.9. The CVAA apparatus must be properly vented to remove potentially harmful fumes generated during sample analysis.

6. EQUIPMENT AND SUPPLIES

6.1. Temperature-controlled water bath (capable of maintaining temperature of 90- 95 °C).

6.2. Atomic Absorption Spectrophotometer equipped with:

6.2.1. Absorption cell with quartz end windows perpendicular to the longitudinal axis. Dimensions of the cell must result in sufficient sensitivity to meet the SOP defined reporting limit. The quartz windows must be maintained to provide accurate measurements. Any scratches or fingerprints can alter the absorption of UV radiation.

6.2.2. Mercury-specific hollow cathode lamp (HCL) or electrodeless discharge lamp (EDL)

6.2.3. Peristaltic pump which can deliver 1 L/min air

6.2.4. Flowmeter capable of measuring an airflow of 1 L/min

6.2.5. Recorder or printer

6.2.6. Drying device to prevent condensation in cell.

Note: Instruments designed specifically for the measurement of mercury using the cold vapor technique may be substituted for the atomic absorption spectrophotometer.

6.3. Plastic bottles – 250 mL

6.4. Nitrogen or argon gas supply, welding grade or equivalent

6.5. Calibrated automatic pipettes

6.6. Class A volumetric flasks

6.7. Top-loading balance, capable of reading up to two decimal places

6.8. Thermometer (capable of accurate readings at 95 °C)

6.9. Disposable cups or tubes

7. REAGENTS AND STANDARDS

7.1. Reagent water must be produced by a Millipore DI system or equivalent. Reagent water must be free of the analytes of interest as demonstrated through the analysis of method blanks.

7.2. Stock (10 ppm) mercury standards are purchased as custom solutions. All standards must be stored in FEP fluorocarbon or previously unused polyethylene or polypropylene bottles. Stock standard solutions must be replaced prior to the expiration date provided by the manufacturer. If no expiration date is provided, the stock solutions may be used for up to one year and must be replaced sooner if verification from an independent source indicates a problem. Additional information can be found in SOP NC-QA-017. Refer to the Standards Logbook for details on standard preparation.

7.3. Working mercury standard (0.1 ppm): Take 1 mL of the stock mercury standard (Section 7.2) and dilute to 100 mL with reagent water. The working mercury standard must be made daily and must be prepared in a matrix of 0.15% HNO_3. This acid (150 uL of concentrated HNO_3) must be added to the flask/bottle before the addition of the stock standard aliquot. Refer to the Standards Logbook for details on standard preparation.

7.4. The calibration standards must be prepared fresh daily from the working standard (Section 7.3) by transferring 0, 0.2, 0.5, 1.0, 5.0 and 10.0 mL aliquots of the working mercury standard into sample preparation bottles and proceeding as specified in Section 11.1 The LCS solution is prepared by transferring 5.0 mL of working standard (Section 7.3) into sample preparation bottles and proceeding as specified in Section 11.1. Refer to the Standards Logbook for details on standard preparation.

Note: Alternate approaches to standard preparation may be taken, and alternate volumes of standard may be prepared as long as the accuracy and final standard concentrations as detailed in Table I (Appendix A) are maintained. For example, automated mercury systems do not require 100 mL of standard and therefore smaller volumes may be generated to reduce waste generation.

7.5. The initial calibration verification standard must be made from a different stock solution than that of the calibration standards.

7.6. Refer to Table I for details regarding the working standard concentrations for calibration, calibration verification and spiking solutions. All standards must be processed through the entire analytical procedure including sample preparation.

7.7. Nitric acid (HNO_3), concentrated, trace metal grade or better

7.8. Hydrochloric acid (HCl), concentrated, trace metal grade or better

7.9. Aqua Regia: Prepare immediately before use by carefully adding three volumes of concentrated HCl to one volume of concentrated HNO_3.

7.10. Stannous chloride solution: Add 50g ± 0.5g of stannous chloride and 25 mL of concentrated HCl, and bring to a final volume of 500 mL with DI water.

Note: Stannous sulfate may be used in place of stannous chloride. Prepare the stannous sulfate solution according to the recommendations provided by the instrument manufacturer.

7.11. Sodium chloride-hydroxylamine hydrochloride solution: Add 240g ± 0.5g of sodium chloride and 240g ± 0.5g of hydroxylamine hydrochloride to every 2000 mL of reagent water.

7.12. Potassium permanganate, 5% solution (w/v): Dissolve 100g of potassium permanganate for every 2000 mL of reagent water.

8. SAMPLE COLLECTION, PRESERVATION, AND STORAGE

8.1. Sample holding time for mercury is 28 days from time of sample collection to the time of sample analysis.

8.2. Soil samples do not require preservation, but must be stored at 4° C ± 2° C until the time of analysis.

9. QUALITY CONTROL

Table II (Appendix A) provides a summary of quality control requirements including type, frequency, acceptance criteria, and corrective action.

9.1. Initial Demonstration of Capability

Prior to the analysis of any analyte using Method 7471A, the following requirements must be met.

9.1.1. Initial Demonstration Study - This requires the analysis of four QC check samples. The QC check sample is a well-characterized, laboratory-generated sample used to monitor method performance. The results of the initial demonstration study must be acceptable before analysis of samples may begin.

9.1.1.1. Four aliquots of the check sample (LCS) are prepared and analyzed using the procedures detailed in this SOP and the determinative SOPs.

9.2. Preparation Batch - A group of up to 20 samples that are of the same matrix and are processed together using the same procedures and reagents. The preparation batch must contain a method blank, a LCS and a matrix spike/matrix spike duplicate. In some cases, at client request, it may be appropriate to process a matrix spike and sample duplicate in place of the MS/MSD. If clients specify specific samples for MS/MSD, the batch may contain multiple MS/MSD pairs.

Company Confidential & Proprietary

9.3. Sample Count - Laboratory generated QC samples (method blanks, LCS, MS/MSD) are not included in the sample count for determining the size of a preparation batch.

9.4. Method Blank (MB) - One method blank must be processed with each preparation batch. The method blank consists of reagent water containing all reagents specific to the method that is carried through the entire analytical procedure, including preparation and analysis. The method blank is used to identify any system and process interferences or contamination of the analytical system that may lead to the reporting of elevated analyte concentrations or false positive data. The method blank must not contain any analyte of interest at, or above, the reporting or at, or above, 5% of the measured concentration of that analyte in associated samples, whichever is higher (sample result must be a minimum of 20 times higher than the blank contamination level). Note: For Ohio VAP projects, the result must be below the reporting limit or samples must be redigested unless the samples are non-detect..

- Repreparation and re-analysis of all samples associated with an unacceptable method blank is required when reportable concentrations are determined in the samples (see exception noted above).

- If there is no analyte greater than the RL in the samples associated with an unacceptable method blank, the data may be reported with qualifiers. **Such action must be addressed in the project narrative.**

- If the above criteria are not met and re-analysis is not possible, then the sample data must be qualified. **This anomaly must be addressed in the project narrative.**

  - Laboratory Control Sample (LCS) - One aqueous LCS must be processed with each preparation batch. The LCS is used to monitor the accuracy of the analytical process. Ongoing monitoring of the LCS results provides evidence that the laboratory is performing the method within acceptable accuracy and precision guidelines. The LCS must be carried through the entire analytical procedure. If the LCS is outside established control limits, the system is out of control and corrective action must occur. In the instance where the LCS recovery is greater than the upper control limit and the sample results are less than RL, the data may be reported. Such action must be addressed in the project narrative.

  - In the event an MS/MSD analysis is not possible, a Laboratory Control Sample Duplicate (LCSD) must be analyzed. The LCSD recovery is evaluated using the same control limits as the LCS. The RPD of the LCS and LCSD must be compared to the matrix spike RPD limits.

  - Corrective action must be repreparation and re-analysis of the batch unless the client agrees that other corrective action is acceptable. For Ohio VAP projects the corrective action must be repreparation and reanalysis of the batch.

9.6 Additional information on QC samples can be found in QA Policy QA-003. Ohio VAP projects must reference this SOP instead of policy QA-003 for information on QC samples.

9.7 Matrix Spike/Matrix Spike Duplicate (MS/MSD) - One MS/MSD pair must be processed for each preparation batch. A matrix spike (MS) is a field sample to which known concentrations of target analytes have been added. A matrix spike duplicate (MSD) is a second aliquot of the same sample (spiked identically as the MS) prepared and analyzed along with the sample and matrix spike. Some client-specific data quality objectives (DQOs) may require the use of sample duplicates in place of, or in addition to, MS/MSDs. The MS/MSD results are used to determine the effect of a matrix on the precision and accuracy of the analytical process. Due to the potential variability of the matrix of each sample, these results may have immediate bearing only on the specific sample spiked. Samples identified as field blanks cannot be used for MS/MSD analysis. Spiking levels are provided in Table I. See Section 12 for the MS/MSD and RPD calculation.

- If analyte recovery or RPD falls outside the acceptance range, the recovery of that analyte must be in control for the LCS. Until in-house control limits are established, a control limit of 70 - 130 % recovery and 20% RPD must be applied to the MS/MSD. If the LCS recovery is within limits, then the laboratory operation is in control and the results may be accepted. If the recovery of the LCS is outside limits, corrective action must be taken. Corrective action must include repreparation and re-analysis of the batch. MS/MSD results which fall outside the control limits must be addressed in the narrative.

- If the native analyte concentration in the MS/MSD exceeds four times the spike level for that analyte, the recovery data are reported as NC (i.e., not calculated).

- If an MS/MSD is not possible due to limited sample volume, then a laboratory control sample duplicate (LCSD) must be analyzed. The RPD of the LCS and LCSD must be compared to the matrix spike RPD limits.

9.8 Control Limits

9.8.1 Control limits are established by the laboratory as described in SOP NC-QA-018.

9.8.2 Laboratory control limits are internally generated and updated periodically unless method specified. Control limits are easily accessible via LIMS (QC Browser program).

9.9 Method Detection Limits (MDLs) and MDL Checks

9.9.1 MDLs and MDL Checks are estab lished by the laboratory as described in SOPs NC-QA-021 and CA-Q-S-006.

9.9.2 MDLs are easily accessible via LIMS (QC Browser program)

9.10 Nonconformance and Corrective Action

9.10.1 Any deviations from QC procedures must be documented as a nonconformance with applicable cause and corrective action approved by the facility QA Manager.

10 CALIBRATION AND STANDARDIZATION

10.1 Calibration standards must be processed through the preparation procedure as described in Section 11.1.

10.2 Due to the differences in preparation protocols, separate calibration and calibration verification standards must be prepared for aqueous and solid matrices.

10.3 Calibration must be performed daily (every 24 hours) and each time the instrument is set up. The instrument calibration date and time must be included in the raw data.

10.4 Set up the instrument with the operating parameters recommended by the manufacturer. Allow the instrument to become thermally stable before beginning calibration (approximately 30 minutes of warm-up is required). Refer to the facility-specific instrument SOP and CVAA instrument manual for detailed setup and operation protocols.

10.5 Calibrate the instrument according to instrument manufacturer's instructions, using a minimum of five standards and a blank. One standard must be at, or below, the reporting limit. Analyze standards in ascending order beginning with the blank. Refer to Section 7 and Table I for additional information on preparing calibration standards and calibration levels.

10.6 The calibration curve must have a correlation coefficient of ≥ 0.995, or the instrument must be stopped and recalibrated prior to running samples. Sample results cannot be reported from a curve with an unacceptable correlation coefficient. NOTE: If any digested calibration standard does not meet SW846 criteria, all associated Ohio VAP samples must be redigested.

10.7 Initial Calibration Verification (ICV/ICB) - Calibration accuracy is verified by analyzing a second source standard (ICV). The ICV result must fall within 10% of the true value for that solution. An ICB is analyzed immediately following the ICV to monitor low level accuracy and system cleanliness. The ICB result must fall within ± the reporting limit (RL) from zero. See Section 12 for the ICV calculation. If either the ICV or ICB fail to meet criteria, the analysis must be terminated, the problem corrected, and the instrument recalibrated (see Section 11.2.6 for required run sequence). If the cause of the ICV or ICB failure was not directly instrument-related, the corrective action must include repreparation of the ICV, ICB, CRA, CCV, and CCB with the calibration curve. For

Ohio VAP, the sample batchmust be redigested.

10.8 Continuing Calibration Verification (CCV/CCB) - Calibration accuracy is monitored throughout the analytical run through the analysis of a known standard after every 10 samples. The CCV must be a mid-range standard at a concentration other than that of the ICV. The CCV result must fall within 20% of the true value for that solution. . See Section 12 for the CCV calculation. A CCB is analyzed immediately following each CCV (see Section11.2.6 for required run sequence). The CCB result must fall within ± RL from zero. Each CCV and CCB analyzed must reflect the conditions of analysis of all associated samples. If the CCV/CCB is biased high and the sample results associated with the CCV/CCB are below the requested reporting limit, then the results can be reported. Sample results may only be reported when bracketed by valid CCV/CCB pairs.

10.9 Detection Limit Standard (CRA) -To verify linearity at the reporting limit, a CRA standard is run at the beginning of each sample analysis run after the ICV/ICB. The CRA standard mercury concentration is 0.2 ug/L. Recommended recovery must be ± 50% of the true value, or the standard is either rerun or the problem corrected and the instrument re-calibrated. The CRA is only required when requested.

10.10 For DoD work, refer to SOP NC-QA-016 for specific details.

11 PROCEDURE

11.1 Standard and Sample Preparation

11.1.1 All calibration and calibration verification standards (ICV, ICB, CCV, CCB) are processed through the digestion procedure as well as the field samples.

11.1.2 Transfer 0, 0.2, 0.5, 1.0, 5.0 and 10.0 mL aliquots of the working standard (Section 7.3) into a series of sample digestion bottles. For the ICV, transfer a 2.5 ml aliquot of the working standard. The ICV working standard must be made from a source other than that used for the calibration standards. For the CCV, transfer a 5 mL aliquot of the working standard into a sample digestion bottle.

Note: Alternate volumes of standard may be prepared as long as the accuracy and final standard concentrations as detailed in Table I are maintained.

11.1.3 Add reagent water to each standard bottle to make a total volume of 10 mL. Continue preparation as described under Section 11.1.5 below.

11.1.4 Transfer 0.6g of a well-mixed sample into a clean sample digestion bottle. Continue preparation as described under Section 11.1.5.

11.1.5 Water Bath Protocol

11.1.5.1 To each LCS **standard** bottle, add 5 mL of reagent water and 5 mL of aqua regia.

11.1.5.2 To each **sample** and Method Blank bottle, add 10 mL of reagent water and 5 mL of aqua regia.

11.1.5.3 Heat for two minutes in a water bath at 90 - 95 ° C.

11.1.5.4 Add 40 mL of distilled water.

11.1.5.5 Add 15 mL of potassium permanganate solution. Cover containers.

11.1.5.6 Heat for 30 minutes in the water bath at 90 - 95 °C.

11.1.5.7 Cool

11.1.5.8 Add 6 mL of sodium chloride-hydroxylamine sulfate solution to reduce the excess permanganate.

11.1.5.9 To each **standard** and sample bottles, add 50 mL of reagent water.

11.1.5.10 Continue as described under Section 11.2.

11.2 Sample Analysis

11.2.1 Because of differences between various makes and models of CVAA instrumentation, no detailed operating instructions can be provided. Refer to the facility specific instrument operating SOP and the CVAA instrument manual for detailed setup and operation protocols.

11.2.2 Automated determination. Refer to Appendix C for instrument setup and operation.

11.2.3 Perform a linear regression analysis of the calibration standards by plotting maximum response of the standards vs. micrograms (µg) of mercury. Determine the mercury concentration in the samples from the linear regression fit of the calibration curve. The calibration acceptance criteria is listed in Section 10.6 Calibration using computer or calculation based regression curve fitting techniques on concentration/response data is acceptable.

11.2.4 All measurements must fall within the defined calibration range to be valid. Dilute

and re-analyze all samples for analytes that exceed the highest calibration standard.

If the sample results are negative and the absolute value of the negative result is greater than the reporting limit, the sample must be diluted and/or reanalyzed.

11.2.5. The following analytical sequence must be used with Method 7471A.

Instrument Calibration
ICV
ICB
CRA if required
Maximum 10 samples
CCV
CCB
Repeat sequence of 10 samples between CCV/CCB pairs as required to complete run
CCV
CCB

Refer to Quality Control Section 9.0 and Table II (Appendix A) for quality control criteria to apply to Method 7471A.

Note: Samples include the method blank, LCS, MS, MSD, duplicate, field samples and sample dilutions.

11.2.6. To facilitate the early identification of QC failures and samples requiring rerun, it is strongly recommended that sample data be reviewed periodically throughout the run.

11.2.7. Guidelines are provided in the appendices on procedures to minimize contamination of samples and standards, preventive maintenance, and troubleshooting.

11.2.8. One-time procedural variations are allowed only if deemed necessary in the professional judgment of supervision to accommodate variation in sample matrix, chemistry, sample size, or other parameters. Any variation in procedure must be completely documented using a Nonconformance Memo. The Nonconformance Memo must be filed in the project file.

11.2.9. Any unauthorized deviations from this procedure must also be documented as a nonconformance with a cause and corrective action described. Procedural deviations are not allowed for Ohio VAP projects.

11.3. Analytical Documentation

11.3.1. Record all analytical information in the analytical logbook/logsheet, including the analytical data from standards, blanks, LCSs, MS/MSDs, and any corrective actions or modifications to the method.

11.3.2. All standards and reagents are logged into a department standard logbook. All standards are assigned a unique number for identification. Logbooks are reviewed by the supervisor or designee.

11.3.3. Documentation such as all associated instrument printouts (final runs, screens, reruns, QC samples, etc.) and daily calibration data corresponding to all final runs is available for each data file.

11.3.4. Sample results and associated QC are entered into LIMs after final technical review.

12. DATA ANALYSIS AND CALCULATIONS

12.1 ICV percent recoveries are calculated according to the equation:

$$\%R = 100\left(\frac{Found(ICV)}{True(ICV)}\right)$$

12.2 CCV percent recoveries are calculated according to the equation:

$$\%R = 100\left(\frac{Found(CCV)}{True(CCV)}\right)$$

12.3 Matrix spike recoveries are calculated according to the following equation:

$$\%R = 100\left(\frac{SSR - SR}{SA}\right)$$

Where:

SSR = Spike Sample Result
SR = Sample Result
SA = Spike Added

12.4 The relative percent difference (RPD) of matrix spike/matrix spike duplicates or sample duplicates are calculated according to the following equations:

$$RPD = 100\left[\frac{|MSD - MS|}{\left(\frac{MSD + MS}{2}\right)}\right]$$

Where:

MS = determined spiked sample concentration
MSD = determined matrix spike duplicate concentration

$$RPD = 100\left[\frac{|DU1 - DU2|}{\left(\frac{DU1 + DU2}{2}\right)}\right]$$

Where:

DU1 = Sample result
DU2 = Sample duplicate result

12.5 For automated determinations, the final concentration determined in solid samples when reported on a dry weight basis is calculated as follows:

mg/kg, dry weight = (C x V x D)/(W x S)

Where:

C = Concentration (ug/L) from instrument readout
V = Volume of digestate (L)
D = Instrument dilution factor
W = Weight in g of wet sample digested
S = Percent solids/100

Note: A Percent Solids determination must be performed on a separate aliquot when dry weight concentrations are to be reported. If the results are to be reported on a wet weight basis, the "S" factor must be omitted from the above equation.

12.6 The LCS percent recovery is calculated according to the following equation:

$$\%R = 100\left(\frac{Found(LCS)}{True(LCS)}\right)$$

12.7 Additional equations and calculations are listed in the following SOPs: Calibration Curves (General), CA-Q-S-005, and Selection of Calibration Points, CA-T-P-002.

13. METHOD PERFORMANCE

13.1 Each laboratory must have initial demonstration of performance data on file for each analyte of interest as described in Section 9.1.

13.2 Training Qualification

13.2.1 The Group/Team Leader has the responsibility to ensure this procedure is performed by an associate who has been properly trained in its use and has the required experience.

14 POLLUTION PREVENTION

14.1 It is TestAmerica's policy to evaluate each method and look for opportunities to minimize waste generated (i.e., examine recycling options, ordering chemicals based on quantity needed, preparation of reagents based on anticipated usage, and reagent stability). Employees must abide by the policies in Section 13 of the Corporate Environmental Health and Safety Manual (CW-E-M-001) for "Waste Management and Pollution Prevention".

15 WASTE MANAGEMENT

15.1 All waste must be disposed of in accordance with Federal, State, and Local regulations. Where reasonably feasible, technological changes have been implemented to minimize the potential for pollution of the environment. Employees will abide by this method and the policies in Section 13 of the Corporate Environmental Health and Safety Manual (CW-E-M-001) for "Waste Management and Pollution Prevention."

15.2 Waste Streams Produced by this Method

15.2.1 The following waste streams are generated by this method.

15.2.1.1 Acid Waste. This waste disposed of in the designated container labeled "Acid Waste".

16. REFERENCES

16.1 References

16.1.1 Test Methods for Evaluating Solid Waste , Physical/Chemical Methods, SW-846, 3rd Edition, Final Update II, Revision I, September 1994, Method 7471A (Mercury)

16.1.2 TestAmerica North Canton Quality Assurance Manual (QAM), current version

16.1.3 TestAmerica Corporate Environmental Health and Safety Manual, CW-E-M-001, and TestAmerica North Canton Facility Addendum and Contingency Plan

16.1.4 Revision History

Historical File:		Revision 1.1: 04/17/97		Revision 0: 12/12/07 (NC-MT-011)
(formerly CORP-MT-0007NC)		Revision 2.2: 02/06/01		
		Revision 2.3: 05/15/01		
		Revision 2.4: 10/28/02		
		Revision 2.5: 11/22/04		

16.2 Associated SOPs and Policies, current version

16.2.1 QA Policy, QA-003

16.2.2 Glassware Washing, NC-QA-014

16.2.3 Statistical Evaluation of Data and Development of Control Charts, NC-QA-018

16.2.4 Method Detection Limits and Instrument Detection Limits, NC-QA-0021 and CA-Q-S-006

16.2.5 Supplemental Practice for DoD Project Work, NC-QA-016

16.2.6 Standards and Reagents, NC-QA-017

16.2.7 Calibration Curves (General), CA-Q-S-005

16.2.8 Selection of Calibration Points, CA-T-P-002

17. MISCELLANEOUS (TABLES, APPENDICES, ETC.)

17.1 Modifications/Interpretations from Reference Method.

17.2 Modifications from Method 7471A

17.3 Chapter 1 of SW846 specify the use of reagent water with a purity equivalent to ASTM Type II water. This SOP specifies the use of a Millipore DI system or equivalent to produce reagent water. This SOP requires that reagent water must be free of the analytes of interest as demonstrated through the analysis of method blanks.

17.4 Chapter 1 of SW-846 states that the method blank must not contain any analyte of interest at or above the MDL. This SOP states that the method blank must not contain any analyte of interest at or above the reporting limit.

Company Confidential & Proprietary

APPENDIX A

TABLES

Company Confidential & Proprietary

TABLE I . MERCURY REPORTING LIMITS, CALIBRATION STANDARD, QC STANDARD AND SPIKING LEVELS

Soil RL (mg/kg)	0.1
Std 0 (mg/L)	0
Std 1 (mg/L)	0.0002
Std 2 (mg/L)	0.0005
Std 3 (mg/L)	0.001
Std 4 (mg/L)	0.005
Std 5 (mg/L)	0.010
ICV (mg/L)	0.0025
CCV/LCS/LCSD (mg/L)	0.005
MS (mg/L)	0.001

*

Company Confidential & Proprietary

TABLE II. Summary Of Quality Control Requirements

QC Parameter	Frequency *	Acceptance Criteria	Corrective Action
ICV	Beginning of every analytical run	90 - 110 % recovery	Terminate analysis, correct the problem, recalibrate, or reprep with calibration curve (see Section 10.1)
ICB	Beginning of every analytical run, immediately following the ICV	The result must be within ± RL from zero	Terminate analysis, correct the problem, recalibrate, or reprep with calibration curve (see Section 10.1)
CCV	Every 10 samples and at the end of the run	80 - 120 % recovery	Terminate analysis, correct the problem, recalibrate, and rerun all samples not bracketed by acceptable CCV or reprep with calibration curve. If CCV is biased high and samples are ND, results can be reported (see Sections 10.2 and 10.9).
CCB	Immediately following each CCV	The result must be within ± RL from zero	Terminate analysis, correct the problem, recalibrate, and rerun all samples not bracketed by acceptable CCB or reprep with calibration curve. If CCB is biased high and samples are ND, results can be reported (see Section 10.2)
Method Blank	One per sample preparation batch of up to 20 samples	The result must be less than or equal to the RL Sample results greater than 20x the blank concentration are acceptable Samples for which the contaminant is < RL do not require redigestion (see Section 9.4)	Redigest and reanalyze samples Note exceptions under criteria section See Section 9.4 for additional requirements

*See Section11.2.6 for exact run sequence to be followed.

TABLE II. Summary of Quality Control Requirements (Cont'd)

QC Parameter	Frequency *	Acceptance Criteria	Corrective Action
Laboratory Control Sample/Laboratory Control Sample Duplicate(LCS/LCSD)	One per sample preparation batch of up to 20 samples	Aqueous LCS/LCSD must be within 80 - 120% recovery or in-house control limits	Terminate analysis, correct the problem, redigest, and re-analyze all samples associated with the LCS (see Section 9.5)
Matrix Spike	One per sample preparation batch of up to 20 samples	75 - 125 % recovery or in-house control limits If the MS/MSD is out for an analyte, it must be in control in the LCS	In the absence of client-specific requirements, flag the data No flag required if the sample level is > 4 times the spike added (see Section 10.1).
Matrix Spike Duplicate	See Matrix Spike	75 - 125 % recovery or in-house control limits RPD ≤ 20% (see MS)	See Corrective Action for Matrix Spike

Company Confidential & Proprietary

APPENDIX B CONTAMINATION CONTROL GUIDELINES

The following procedures are strongly recommended to prevent contamination:

All glassware must be washed with detergent and tap water and rinsed with 1:1 nitric acid followed by deionized water.

Proper laboratory housekeeping is essential in the reduction of contamination in the metals laboratory. All work areas must be kept scrupulously clean.

Powdered Gloves must not be used in the metals laboratory since the powder contains zinc, as well as other metallic analytes. Glassware must be periodically checked for cracks and etches and discarded if found. Etched glassware can cause cross contamination of any metallic analytes.

Autosampler trays must be covered to reduce the possibility of contamination. Trace levels of elements being analyzed in the samples can be easily contaminated by dust particles in the laboratory.

The following are helpful hints in the identification of the source of contaminants:

Reagents or standards can contain contaminants or be contaminated with the improper use of a pipette.

Improper cleaning of glassware can cause contamination.

Separate glassware if an unusually high sample is analyzed and soak with sulfuric acid prior to routine cleaning.

Company Confidential & Proprietary

Appendix C Instrument SetUp

Hg Analysis (Leeman PS200II)

SYSTEM INITIALIZATION AND WARM-UP

TO SET UP INSTRUMENT FOR ANALYSIS

1. F1 Menu

2. **A**utosampler

   A. **R**ack Entry

   B. **E**dit (ex. Rack 1), Enter

   C. Cup **I**D - Enter (clears sample #'s)

   E. Press Insert Key and move cursor with arrows to cup ID and begin typing labels.

3. Press F2 Macro key and type in– Hg A. Enter folder name - ex., HG0306, Enter. If folder does not exist, type Y - Enter.

   B. Type in - "Rack 1", "Rack 2" etc., Enter.

   C. Type in : FROM CUP TO CUP

   Ex. = 1 30

Do the same for Position 2 if needed. If not needed, you must press "Enter" three times to begin analysis.

Title: INDUCTIVELY COUPLED PLASMA – ATOMIC EMISSION SPECTROSCOPY, SPECTROMETRIC METHOD FOR TRACE ELEMENT ANALYSES

[Method: SW846 Methods 6010A,6010B and EPA Method 200.7]

Approvals (Signature/Date):

Karen R. Counts	1/5/09		1/06/09
Technology Specialist	Date	Health & Safety Coordinator	Date
Dorothy J. Ruson	1/5/09		1/5/09
Quality Assurance Manager	Date	Laboratory Director	Date
Mark Bruce	1/5/09		
Technical Director	Date		

This SOP was previously identified as SOPNC-MT-012, Rev 0, dated 01/18/08

Copyright Information:

This documentation has been prepared by TestAmerica Analytical Testing Corp. and its affiliates ("TestAmerica"), solely for their own use and the use of their customers in evaluating their qualifications and capabilities in connection with a particular project. The user of this document agrees by its acceptance to return it to TestAmerica upon request and not to reproduce, copy, lend, or otherwise disclose its contents, directly or indirectly, and not to use if for any other purpose other than that for which it was specifically provided. The user also agrees that where consultants or other outside parties are involved in the evaluation process, access to these documents shall not be given to said parties unless those parties also specifically agree to these conditions.

THIS DOCUMENT CONTAINS VALUABLE CONFIDENTIAL AND PROPRIETARY INFORMATION. DISCLOSURE, USE OR REPRODUCTION OF THESE MATERIALS WITHOUT THE WRITTEN AUTHORIZATION OF TESTAMERICA IS STRICTLY PROHIBITED. THIS UNPUBLISHED WORK BY TESTAMERICA IS PROTECTED BY STATE AND FEDERAL LAW OF THE UNITED STATES. IF PUBLICATION OF THIS WORK SHOULD OCCUR, THE FOLLOWING NOTICE SHALL APPLY: ©COPYRIGHT 2008 TESTAMERICA ANALYTICAL TESTING CORP. ALL RIGHTS RESERVED.

Facility Distribution No. _____ **Distributed To:** _____

TABLE OF CONTENTS

1. SCOPE AND APPLICATION 3
2. SUMMARY OF METHOD 3
3. DEFINITIONS 4
4. INTERFERENCES 4
5. SAFETY 5
6. EQUIPMENT AND SUPPLIES 6
7. REAGENTS AND STANDARDS 7
8. SAMPLE COLLECTION, PRESERVATION AND STORAGE 7
9. QUALITY CONTROL 8
10. CALIBRATION AND STANDARDIZATION 13
11. PROCEDURE 15
12 DATA ANALYSIS AND CALCULATIONS 19
13. METHOD PERFORMANCE 22
14. POLLUTION PREVENTION 22
15. WASTE MANAGEMENT 22
16. REFERENCES 22
17. MISCELLANEOUS (TABLES, APPENDICES, ETC.) 23

LIST OF APPENDICES:

APPENDIX A - TABLES 29
APPENDIX B - CROSS REFERENCE OF TERMS USED IN METHODS AND IN SOP 38
APPENDIX C - TROUBLESHOOTING GUIDE 42
APPENDIX D - CONTAMINATION CONTROL GUIDELINES 44
APPENDIX E - PREVENTATIVE MAINTENANCE 46
APPENDIX F – ICP OPERATING INSTRUCTIONS 48

Company Confidential and Proprietary

1. SCOPE AND APPLICATION

1.1. This procedure describes the analysis of trace elements including metals in solution by Inductively Coupled Plasma -Atomic Emission Spectroscopy (ICP-AES) using SW-846 Methods 6010A, 6010B and EPA Method 200.7. Tables I and IA of Appendix A lists the elements appropriate for analysis by Methods 6010A, 6010B and 200.7 and the associated reporting limit.. Additional elements may be analyzed under Methods 6010A, 6010B and 200.7 provided that the method performance criteria presented in Section 13.0 are met.

1.2. ICP analysis provides for the determination of metal concentrations over several orders of magnitude. Detection limits, sensitivity, and optimum concentration ranges of the metals will vary with the matrices and instrumentation used.

1.3. Methods 6010A and 6010B are applicable to the determination of dissolved, suspended, total recoverable, and total elements in ground water, aqueous samples, soils, sludges, wastes, sediments, biological, and TCLP, EP, and other leachates/extracts. All matrices require digestion prior to analysis. Silver concentrations must be below 2.0 mg/L in aqueous samples and 100 mg/kg in solid matrix samples. Precipitation may occur in samples where silver concentrations exceed these levels and lead to the generation of erroneous data.

1.4. Method 200.7 is applicable to the determination of dissolved, suspended, total recoverable, and total elements in water, waste water, and solid wastes. All matrices require digestion prior to analysis. Silver concentrations must be below 0.1 mg/L in aqueous samples.

2. SUMMARY OF METHOD

2.1. This method describes a technique for the determination of multi elements in solution using sequential or simultaneous optical systems and axial or radial viewing of the plasma. The basis of the method is the measurement of atomic emission by an optical spectroscopic technique. Samples are nebulized and the aerosol that is produced is transported to the plasma torch where excitation occurs. Characteristic atomic-line emission spectra are produced by radio frequency inductively-coupled plasma (ICP). The spectra are dispersed by a grating spectrometer and the intensities of the emission lines are monitored by photomultiplier tubes. The photocurrents from the photomultiplier tubes are processed and controlled by a computer system. A background correction technique is required to compensate for variable background contribution to the determination of trace elements. Background must be measured adjacent to analyte lines during analysis. The position selected for the background intensity measurement, on either or both sides of the analytical line, will be determined by the complexity of the spectrum adjacent to the analyte line. The position used must be free of spectral interferences and reflect the same change in

Company Confidential and Proprietary

background intensity as occurs at the analyte wavelength measured. Background correction is not required in cases of line broadening where a background correction measurement would actually degrade the analytical result. The possibility of additional interferences must also be recognized, and appropriate actions taken. Alternatively, multivariate calibration methods may be chosen for which point selection for background correction is superfluous since whole spectral regions are processed.

2.1. Refer toNC-IP-010, Acid Digestion of Soils, SW846 Method 3050B, andNC-IP-011, Acid Digestion of Aqueous Samples by SW846 and MCAWW 200 Series Methods for details on sample preparation methods.

3. DEFINITIONS

3.1. Dissolved Metals: Those elements which pass through a 0.45 um membrane. (Sample is acidified after filtration).

3.2. Total Metals: The concentration determined on an unfiltered sample following vigorous digestion.

3.3. Total Recoverable Metals: The concentration determined on an unfiltered sample following treatment with hot, dilute mineral acid.

3.4. Refer to the glossary in the TestAmerica North Canton Quality Assurance Manual (QAM), current version for additional definitions. Refer to Appendix B for a cross reference of method definitions.

4. INTERFERENCES

4.1. Spectral, physical and chemical interference effects may contribute to inaccuracies in the determinations of trace elements by ICP. Spectral interferences are caused by:

- Overlap of a spectral line from another element.
- Unresolved overlap of molecular band spectra.
- Background contribution from continuous or recombination phenomena.
- Stray light from the line emission of high concentration elements.

4.1.1. A background correction technique is required to compensate for variable background contribution to the determination of trace elements. Background correction is not required in cases where a background corrective measurement would actually degrade the analytical result.

4.1.2. Inter-element correction factors (IECs) are necessary to compensate for spectral overlap. Inter-element interferences occur when elements in the

sample emit radiation at wavelengths so close to that of the analyte that they contribute significant intensity to the analyte channel. If such conditions exist, the intensity contributed by the matrix elements will cause an excessively high (or sometimes low) concentration to be reported for the analyte. Inter-element corrections IECs must be applied to the analyte to remove the effects of these unwanted emissions.

4.1.3. Physical interferences are generally considered to be effects associated with sample transport, nebulization, and conversion within the plasma. These interferences may result in differences between instrument responses for the sample and the calibration standards. Physical interferences may occur in the transfer of solution to the nebulizer (e.g., viscosity effects) at the point of aerosol formation and transport to the plasma (e.g., surface tension) or during excitation and ionization processes within the plasma itself. Changes in viscosity and surface tension can cause significant inaccuracies, especially in samples containing high dissolved solids or high acid concentrations. If physical interferences are present, dilution of the sample, use of a peristaltic pump, mass flow controller, use of an internal standard, and/or use of a high solids nebulizer can reduce the effect. Chemical interferences are characterized by molecular compound formation, ionization effects, and solute vaporization effects. Normally these effects are not significant with the ICP technique, but if observed can be minimized by buffering the sample, matrix matching, or standard addition procedures.

5. SAFETY

5.1. Employees must abide by the policies and procedures in the Corporate Environmental Health and Safety Manual and this document.

5.2. Eye protection that protects against splash, laboratory coat, and appropriate gloves must be worn while samples, standards, solvents, and reagents are being handled. Disposable gloves that have been contaminated must be removed and discarded; other gloves must be cleaned immediately.

5.3. The following is a list of the materials used in this method, which have a serious or significant hazard rating. **NOTE: This list does not include all materials used in the method. The table contains a summary of the primary hazards listed in the MSDS for each of the materials listed in the table.** A complete list of materials used in the method can be found in the Reagents and Standards section. Employees must review the information in the MSDS for each material before using it for the first time or when there are major changes to the MSDS.

Material (1)	Hazards	Exposure Limit (2)	Signs and symptoms of exposure

Nitric Acid	Corrosive Oxidizer Poison	2 ppm-TWA 4-ppm STEL	Nitric acid is extremely hazardous; it is corrosive, reactive, an oxidizer, and a poison. Inhalation of vapors can cause breathing difficulties and lead to pneumonia and pulmonary edema, which may be fatal. Other symptoms may include coughing, choking, and irritation of the nose, throat, and respiratory tract. Can cause redness, pain, and severe skin burns. Concentrated solutions cause deep ulcers and stain skin a yellow or yellow-brown color. Vapors are irritating and may cause damage to the eyes. Contact may cause severe burns and permanent eye damage.
Hydrochloric Acid	Corrosive Poison	5 ppm-Ceiling	Inhalation of vapors can cause coughing, choking, inflammation of the nose, throat, and upper respiratory tract, and in severe cases, pulmonary edema, circulatory failure, and death. Can cause redness, pain, and severe skin burns. Vapors are irritating and may cause damage to the eyes. Contact may cause severe burns and permanent eye damage.
1 – Always add acid to water to prevent violent reactions			
2 – Exposure limit refers to the OSHA regulatory exposure limit.			

5.3.1. The plasma emits strong UV light and is harmful to vision. **NOTE**: **AVOID looking directly at the plasma**.

5.3.2. The RF generator produces strong radio frequency waves, most of which are unshielded. People with pacemakers must not go near the instrument while in operation.

5.4. Exposure to chemicals must be maintained **as low as reasonably achievable.** All samples with stickers that read "Caution/Use Hood!" **must** be opened in the hood. Contact the EH&S Coordinator if this is not possible. Metals digestates can be processed outside of a fume hood. Solvent and waste containers must be kept closed unless transfers are being made.

5.5. All work must be stopped in the event of a known or potential compromise to the health and safety of a TestAmerica North Canton associate. The situation must be reported **immediately** to the EH&S Coordinator and the Laboratory Supervisor.

6. EQUIPMENT AND SUPPLIES

6.1. Inductively Coupled Plasma Atomic Emission Spectrometer equipped with autosampler and background correction.

6.2. Radio Frequency Generator

6.3. Argon gas supply, welding grade or equivalent

6.4. Coolflow or appropriate water cooling device

6.5. Peristaltic Pump

6.6. Calibrated automatic pipettes or Class A glass volumetric pipettes – ranging from 5 µL → 10 ml

6.7. Class A volumetric flasks – range from 50 ml → 2000 ml

6.8. Autosampler tubes – range from 8 ml → 14 ml

7. REAGENTS AND STANDARDS

7.1 Intermediate standards are purchased as custom multi-element mixes or as single-element solutions. All standards must be stored in FEP fluorocarbon or unused polyethylene or polypropylene bottles. Intermediate standard solutions must be replaced prior to the expiration date provided by the manufacturer. If no expiration date is provided, the intermediate solutions may be used for up to one year and must be replaced sooner if verification from an independent source indicates a problem. Expiration dates can be extended provided that the acceptance criteria described in laboratory-specific SOPs are met. Additional information can be found in SOP NC-QA-017.

7.2 Working calibration, calibration verification solutions, and internal standard solutions must be prepared in a matrix of 5% hydrochloric and 5% nitric acids. Refer to Tables II, III, IV and V (Appendix A) for details regarding the working standard concentrations for calibration, calibration verification, interference correction, and spiking solutions. Refer to the laboratory Standard Logbook or Reagent Logbook for details on standard or reagent preparation.

7.3 Concentrated nitric acid (HNO_3), trace metal grade or better.

7.4 Concentrated hydrochloric acid (HCl), trace metal grade or better.

7.5 Reagent water must be produced by a Millipore DI system or equivalent. Reagent water must be free of the analytes of interest as demonstrated through the analysis of method blanks.

8. SAMPLE COLLECTION, PRESERVATION AND STORAGE

8.1. Sample holding times for metals are six months from time of collection to the time of analysis.

8.2. Aqueous samples are preserved with nitric acid to a pH of <2 and may be stored in

either plastic or glass. If boron is to be determined, plastic containers are preferred. Refrigeration is not required. Preservation must be verified prior to analysis.

8.3. Soil samples do not require preservation, but must be stored at 4°C ± 2° until the time of preparation.

9. QUALITY CONTROL

Table VI (Appendix A) provides a summary of quality control requirements including type, frequency, acceptance criteria, and corrective action.

9.1. Initial Demonstration of Capability

9.1.1. Prior to analysis of any analyte using Methods 200.7, 6010A, or 6010B, the following requirements must be met.

9.1.2. Instrument Detection Limit (IDL) - The IDL for each analyte must be determined for each analyte wavelength used for each instrument. The IDL must be determined annually for client-specific projects. For DoD work, refer to SOP NC-QA-016. If the instrument is adjusted in any way that may affect the IDL, the IDL for that instrument must be redetermined. The IDL will be determined by multiplying by 3, the standard deviation obtained from the analysis of a blank solution, with seven consecutive measurements. Each measurement must be performed as though it were a separate analytical sample (i.e., each measurement must be followed by a rinse and/or any other procedure performed between the analysis of separate samples).

9.1.3. Method Detection Limit (MDL) - An MDL must be determined for each analyte prior to the analysis of any client samples. Refer to TestAmerica North Canton SOP NC-QA-021 and CA-Q-S-006 for details on MDL analysis and criteria.

9.1.4. Linear Range Verification (LR) - The linear range must be verified every six months for each analyte wavelength used on each instrument. The linear range is the concentration above which results cannot be reported without dilution of the sample. The standards used to verify the linear range limit must be analyzed during a routine analytical run, and must read within 10% of the expected value.

For the **initial** determination of the upper limit of the linear dynamic range (LDR) for each wavelength, determine the signal responses from a minimum of three to five different concentration standards across the estimated range. One standard must be near the upper limit of the estimated range. The concentration measured at the LDR must be no more than 10% less than the expected level extrapolated from lower standards. If the instrument is adjusted in any way that may affect the LRs, new dynamic ranges must be determined. The LR data must be documented and kept on file.

Company Confidential and Proprietary

9.1.5. Background Correction Points - To determine the appropriate location for off-line background correction when establishing methods, the user must scan the area on either side adjacent to the wavelength and record the apparent emission intensity from all other method analytes. This spectral information must be documented and kept on file. The location selected for background correction must be either free of off-line inter-element spectral interference, or a computer routine must be used for automatic correction on all determinations. Tests to determine spectral interference must be done using analyte concentrations that will adequately describe the interference. Background correction points must be set prior to determining IECs. Refer to the ICP instrument manual for specific procedures to be used in setting background correction points.

9.1.6. Inter-element Corrections (IECs) - ICP inter-element correction factors must be determined prior to the analysis of samples and every six months thereafter. If the instrument is adjusted in any way that may affect the IECs, the IECs must be redetermined. When initially determining IECs for an instrument, wavelength scans must be performed to ensure that solutions in use are free from contaminants. If an IEC varies significantly from the previously determined IEC, then the possibility of contamination must be investigated. The purity of the IEC check solution can be verified by using a standard from a second source or an alternate method (i.e., ICP-MS). Published wavelength tables (e.g., MIT tables, Inductively Coupled Plasma-Atomic Spectroscopy: Prominent Lines) can also be consulted to evaluate the validity of the IECs. Refer to the instrument manufacturer's recommendations for specific procedures to be used in setting IECs. An IEC must be established to compensate for any interelement interference which results in a false analyte signal greater than ± the RL as defined in Tables I or IA. For elements with a reporting limit of 10 ug/L or less, the signal must be ± two times the RL. To determine IECs, run a single element standard at the established linear range. To calculate an IEC, divide the observed concentration of the analyte by the actual concentration of the "interfering element."

Note: Trace ICP IECs are more sensitive to small changes in the plasma and instrument setup conditions. Adjustments in the IECs will be required on a more frequent basis for the Trace as reflected by the ICSA response. Additional spectral interference is present from easily ionizable elements such as potassium and sodium in axial viewing instruments.

9.1.7. Rinse Time Determination - Rinse times must be determined upon initial set-up of an ICP instrument. To determine the appropriate rinse time for a particular ICP system, the linear range verification standard (see Section 9.1.4) must be aspirated as a regular sample followed by the analysis of a series of rinse blanks. The length of time required to reduce the analyte

signals to < RL will define the rinse time for a particular ICP system. For some analytes, it may be impractical to set the rinse time based on the linear range standard result (i.e., analyte not typically detected in environmental samples at that level and an excessive rinse time would be required at the linear range level). Until the required rinse time is established, the method recommends a rinse period of at least 60 seconds between samples and standards. If a memory effect is suspected, the sample must be re-analyzed after a rinse period of sufficient length. Rinse time studies can be conducted at additional concentration levels. These additional studies must be documented and kept on file, if a concentration other than the linear range level is used to set the rinse time. The concentration levels used to establish the rinse time must be taken into consideration when reviewing the data.

9.2. Method Blank (MB) - One method blank must be processed with each preparation batch. The method blank consists of reagent water containing all reagents specific to the method that is carried through the entire analytical procedure, including preparation and analysis. The method blank is used to identify any system and process interferences or contamination of the analytical system that may lead to the reporting of elevated analyte concentrations or false positive data. The method blank must not contain any analyte of interest at or above the reporting limit (exception: common laboratory contaminants, see below) or at or above 5% of the measured concentration of that analyte in associated samples, whichever is higher (sample result must be a minimum of 20 times higher than the blank contamination level). For Ohio VAP projects, all analytes must be less than the reporting limit unless the associated samples are ND.

- If the analyte is a common laboratory contaminant (copper, iron, lead, or zinc), the data may be reported with qualifiers if the concentration of the analyte in the method blank is less than two times the RL. Such action must be addressed in the project narrative.

- Repreparation and re-analysis of all samples associated with an unacceptable method blank is required when reportable concentrations are determined in the samples (see exception noted above).

- If there is no analyte greater than the RL in the samples associated with an unacceptable method blank, the data may be reported with qualifiers. Such action must be addressed in the project narrative.

- If the above criteria are not met and re-analysis is not possible, then the sample data must be qualified. This anomaly must be addressed in the project narrative.

9.3. Laboratory Control Sample (LCS) - One aqueous LCS must be processed with each preparation batch. The LCS must contain all analytes of interest and must be carried through the entire analytical procedure. Aqueous LCS spike levels are provided in Table II (Appendix A). The LCS is used to monitor the accuracy of the analytical process. Ongoing monitoring of the LCS results provides evidence that the

laboratory is performing the method within acceptable accuracy and precision guidelines.

- If any analyte is outside established control limits, the system is out of control and corrective action must occur. Unless in-house control limits are established, a control limit of 80 - 120% recovery must be applied.

- In the event that an MS/MSD analysis is not possible, a Laboratory Control Sample Duplicate (LCSD) must be analyzed. The LCSD recovery is evaluated using the same control limits as the LCS. The RPD of the LCS and LCSD must be compared to in-house limits.

- In the instance where the LCS recovery is greater than the upper control limit and the sample results are < RL, the data may be reported with qualifiers. Such action must be addressed in the report narrative.

- Corrective action will be repreparation and re-analysis of the batch unless the client agrees that other corrective action is acceptable. For Ohio VAP projects the corrective action must be repreparation and reanalysis of the batch.

9.4 Additional information on QC samples can be found in QA Policy QA-003. Ohio VAP projects must reference this SOP instead of policy QA-003 for information on QC samples.

9.5 Matrix Spike/Matrix Spike Duplicate (MS/MSD) - One MS/MSD pair must be processed for each preparation batch. A matrix spike (MS) is a field sample to which known concentrations of target analytes have been added. A matrix spike duplicate (MSD) is a second aliquot of the same sample (spiked identically as the MS) prepared and analyzed along with the sample and matrix spike. Some client-specific data quality objectives (DQOs) may require the use of sample duplicates in place of, or in addition to, MS/MSDs. The MS/MSD results are used to determine the effect of a matrix on the precision and accuracy of the analytical process. Due to the potential variability of the matrix of each sample, these results may have immediate bearing only on the specific sample spiked. Samples identified as field blanks cannot be used for MS/MSD analysis. Spiking levels are provided in Tables II and V (Appendix A).

- If any analyte recovery or RPD falls outside the acceptance range, the recovery of that analyte must be in control for the LCS. For Methods 200.7, 6010A, and 6010B, control limits of 75-125% recovery and 20% RPD or historical acceptance criteria must be applied to the MS/MSD. If the LCS recovery is within limits, then the laboratory operation is in control and the results may be accepted. If the recovery of the LCS is outside limits, corrective action must be taken. Corrective action will include repreparation and re-analysis of the batch. MS/MSD results, which fall outside the control limits, must be addressed in the narrative.

- If the native analyte concentration in the MS/MSD exceeds four times the spike level for that analyte, the recovery data is reported as NC, MSB (i.e., not

calculated). Two other narrative notes for metals analyses: Matrix spike/spike duplicate spike recovery/recoveries was/were outside the acceptance limits of some analytes. The acceptable LCS analysis data indicated that the analytical system was operating within control and this condition is most likely due to matrix interference. See the Matrix Spike Report for the affected analytes which will be flagged with N. Matrix spike/spike duplicate relative percent difference (RPD) exceeded the acceptance limits for some analytes. The imprecision may be attributed to sample heterogeneity. See the Matrix Spike Report for the affected analytes, which will be flagged with *.

- If an MS/MSD is not possible due to limited sample volume, then a laboratory control sample duplicate (LCSD) must be analyzed. The RPD of the LCS and LCSD must be compared to the matrix spike RPD limits.

9.6 Dilution test – A dilution test is performed to determine whether significant physical or chemical interferences exist due to the sample matrix. One sample per preparation batch must be processed as a dilution test. The test is performed by running a sample at a 5 times (1:4) dilution. Samples identified as field blanks cannot be used for dilution tests. The results of the diluted sample after correction for dilution must agree within 10% of the original sample determination when the original sample concentration is greater than 50 times the IDL. If the results are not within 10%, the possibility of chemical or physical interference exists and the data is flagged.

9.12 Control Limits

9.12.1 Control limits are established by the laboratory as described in SOP NC-QA-018.

9.12.2 Laboratory control limits are internally generated and updated periodically unless method specified. Control limits are easily accessible via LIMS (QC Browser program).

9.13 Method Detection Limits (MDLs) and MDL Checks

9.13.1 MDLs and MDL Checks are established by the laboratory as described in SOPs NC-QA-021 and CA-Q-S-006.

9.13.2 MDLs are easily accessible via LIMS (QC Browser program)

9.14 Nonconformance and Corrective Action

9.14.1 Any deviations from QC procedures must be documented as a nonconformance with applicable cause and corrective action approved by the facility QA Manager.

10. CALIBRATION AND STANDARDIZATION

10.1. Set up the instrument with the operating parameters recommended by the manufacturer. Allow the instrument to become thermally stable before beginning calibration (approximately 30 minutes of warm-up is required). Refer to the instructions in Appendix F.

10.3 Profile and calibrate the instrument according to the instrument manufacturer's recommended procedures. Flush the system with the calibration blank between each standard or as the manufacturer recommends. The calibration curve must consist of a minimum of a blank and a standard. Refer to Appendix F for detailed setup and operation protocols. Refer to Instruction Manuals in laboratory Calibration must be performed daily and each time the instrument is set up. Instrument runs may be continued over periods exceeding 24 hours as long as all calibration verification (CCV) and interference check QC criteria are met. The instrument standardization date and time must be included in the raw data

10.4 Initial Calibration Verification (ICV/ICB) - Calibration accuracy is verified by analyzing a second source standard (ICV). For analyses conducted under Method 200.7, the ICV result must fall within 5% of the true value for that solution with relative standard deviation <3% from replicate (minimum of two) exposures. For Method 6010B, the ICV must fall within 10% of the true value for that solution. For Method 6010B, the relative standard deviation must be <5% from replicate (minimum of two) exposures. An ICB is analyzed immediately following the ICV to monitor low level accuracy and system cleanliness. The ICB result must fall within ± the RL from zero. If either the ICV or ICB fail to meet criteria, the analysis must be terminated, the problem corrected, the instrument recalibrated, and the calibration reverified (see Sections 11.6 through 11.8 for required run sequence).

10.5Continuing Calibration Verification (CCV/CCB) - Calibration accuracy is monitored throughout the analytical run through the analysis of a known standard after every 10 samples and at the end of the sample run. The CCV is to be a mid-range standard made from a dilution of the calibration standard. The CCV for all methods must fall within 10% of the true value for that solution. For Methods 6010B, and 200.7, the relative standard deviation must be <5% from replicate (minimum of two) exposures. A CCB is analyzed immediately following each CCV (see Sections 11.6 through 11.8 for required run sequence). The CCB result must fall within ± RL from zero. Sample results may only be reported when bracketed by valid CCV/CCB pairs. If a mid-run CCV or CCB fails, all affected samples will be re-analyzed with valid CCV/CCB pairs (refer to Section 11.7 for an illustration of the appropriate rerun sequence). Exceptions: If CCB > RL, samples < RL can be reported with an NCM. If CCV is outside of criteria on the high side, samples < RL can be reported with an NCM.

10.6 Verification Standards (6010A only). The calibration standards are analyzed against the calibration curve and must be within 5% of the true value.

10.7 Interference Check Analysis (ICSA/ICSAB) - The validity of the inter-element correction factors is demonstrated through the successful analysis of interference check solutions. The ICSA contains only interfering elements, the ICSAB contains analytes and interferents. Refer to Table IV (Appendix A) for the details of ICSA and ICSAB composition. Custom multi-element ICS solutions must be used. All analytes must be spiked into the ICSAB solution; therefore, if a non-routine analyte is required, then it must be manually spiked into the ICSAB using a certified ultra high purity single element solution or custom lab-specific mix. If the ICP will display overcorrection as a negative number, then the non-routine elements can be controlled from the ICSA as described in Section 10.6.3. Elements known to be interferents on a required analyte must be included in the ICP run when that analyte is determined. Aluminum, iron, calcium, and magnesium must always be included in all ICP runs.

10.7.1 The ICSA and ICSAB solutions must be run at the beginning of the run (see Sections 11.6 or 11.7 for required run sequence). For Method 6010A, the ICSA and ICSAB solutions must be run every 8 hours.

10.7.2 The ICSAB results for the interferents must fall within 80 - 120% of the true value. If any ICSAB interferent result fails criteria, the analysis must be terminated, the problem corrected, the instrument recalibrated, and the samples rerun.

10.7.3 ICSA results for the non-interfering elements with reporting limits ≤ 10 ug/L must fall within ± 2 times the RL from zero. ICSA results for the non-interfering elements with RLs > 10 µg/L must fall within ± 1 times the RL from zero. If the ICSA results for the non-interfering elements do not fall within ± two times RL (RL ≤10) or ± 1xRL (RL>10) from zero, the field sample data must be evaluated as follows.

- If the non-interfering element concentration in the ICSA is the result of contamination versus a spectral interference, and this reason is documented, the field sample data can be accepted.
- If the affected element was not required, then the sample data can be accepted.
- If the interfering elements are not present in the field sample at a concentration which would result in a false positive or negative result greater than ± two times the RL from zero, then the field sample data can be accepted.
- If the interfering element is present in the field sample at a level which would result in a false analyte signal greater than ± two times the RL from

zero, the data can be accepted only if the concentration of the affected analyte in the field sample is more than ten times the analyte signal in the ICSA.

- If the data does not meet the above conditions, then the IECs must be re-evaluated and corrected if necessary and the affected samples re-analyzed or the sample results manually corrected through application of the new IEC to the raw results. If the results are recalculated manually, the calculations must be clearly documented on the raw data.

10.8 CRI - To verify linearity near the RL for ICP analysis, a CRI standard is run at the beginning of each sample analysis run. Additionally, some projects may require CRI analysis at the end of the run (see Sections 11.6 or 11.7 for required run sequence). Evaluate associated samples based upon advisory limits of ± 50% of true value. This standard is required for Method 6010A.

Note: The custom CRI mix contains most analytes at a level near the standard lab reporting limit.

11. PROCEDURE

11.1. A minimum of <u>two</u> <u>exposures</u> for each standard, field sample and QC sample is required. The average of the exposures is reported. For Trace ICP analyses, the results of the sum channel must be used for reporting.

11.2. Prior to calibration and between each sample/standard, the system is rinsed with the calibration blank solution.

11.3. The use of automated QC checks through the instrument software is highly recommended for all calibration verification samples (ICV,CCV), blanks (ICB,CCB,PB), interference checks (ICSA,ICSAB), and field samples (linear range) to improve the data review process.

11.4. To facilitate the early identification of QC failures and samples requiring rerun, it is strongly recommended that sample data be reviewed periodically throughout the run.

11.5. The following procedural guidelines must be followed when using an internal standard:

11.5.1 Typically used internal standard is: yttrium. (Note: Any element can be used that is not typically found in environmental samples at a high rate of occurrence.)

11.5.2 The internal standard (IS) must be added to every sample and standard at the same concentration. It is recommended that the IS be added to each analytical sample automatically through use of a third pump channel and mixing coil. Internal standards must be added to blanks, samples, and

standards in a like manner, so that dilution effects resulting from the addition may be disregarded.

11.5.3 The concentration of the internal standard must be sufficiently high to obtain good precision in the measurement of the IS analyte used for data correction and to minimize the possibility of correction errors if the IS analyte is naturally present in the sample.

11.5.4 The internal standard raw intensity counts must be printed on the raw data.

11.5.5 The analyst must monitor the response of the internal standard throughout the sample analysis run. This information is used to detect potential problems and identify possible background contributions from the sample (i.e., natural occurrence of IS analyte). The instrument automatically adjusts sample results based on comparison of the internal standard intensity in the sample to the internal standard intensity at calibration.

11.5.5.1 If the internal standard counts fall within ±30% of the counts observed in the ICB, then the data is acceptable.

11.5.5.2 If the internal standard counts in the field samples are more than ± 30% higher than the expected level, evaluate the run to determine if a dilution is needed due to matrix interference.

11.6 The following analytical sequence must be used for Methods 6010B, and 200.7:

<u>Instrument Calibration</u>
ICV
ICB
CRI
ICSA
ICSAB
CCV
CCB
10 samples
CCV
CCB
10 samples
CCV
CCB
Repeat sequence of up to 10 samples between CCV/CCB pairs as required to complete run
CRI (The CRI counts as a sample analysis.)
CCV
CCB

Refer to Quality Control Section 9.0 and Table VI (Appendix A) for Methods 6010A,

6010B, and 200.7 quality control criteria.

11.7 The following analytical sequence must be used for Methods 6010A:

Instrument Calibration
ICV
ICB
CRI (+/- 50%)
Calibration verification standards
ICSA (maximum every 8 hours)
ICSAB (maximum every 8 hours)
CCV
CCB
10 samples
CCV
CCB
10 samples
CCV
CCB
Repeat sequence of up to 10 samples between CCV/CCB pairs as required to complete run
CRI (The CRI counts as a sample analysis.)
CCV
CCB

11.8 The following run sequence provides an illustration of a mid-run CCV or CCB failure and the appropriate corrective action run sequence as described in Section 10.4.

Original Run: Instrument Calibration
ICV
ICB
CRI
ICSA
ICSAB
CCV
CCB
10 samples
CCV
CCB
10 samples
CCV
CCB
10 samples **
CCV * * Failure occurs at CCV/CCB
CCB * **Samples requiring rerun for affected analytes
10 samples **

CCV
CCB
10 samples
CCV
CCB

11.9 The instrument may be reprofiled between CCV/CCB pairs to correct for environment- induced drift.

11.10 Guidelines are provided in the Appendix C, D, and E on procedures to minimize contamination of samples and standards, preventive maintenance, and troubleshooting.

11.11 All measurements must fall within the defined linear range where spectral interference correction factors are valid. Dilute and reanalyze all samples for required analytes that exceed the linear range. If an inter-element correction exists for an analyte, which exceeds the linear range, the IEC may be inaccurately applied. Therefore, even if an overrange analyte may not be required to be reported for a sample, if that analyte is an interferent for any requested analyte in that sample, the sample must be diluted. Acid strength must be maintained in the dilution of samples.

11.12 Any variation in procedure must be completely documented using instrument run logs, maintenance logs, report narratives, a Nonconformance Memo, or an anomaly report; and is approved by a Supervisor/Group Leader and QA Manager.

11.13 Nonconformance documentation must be filed in the project file.

11.14 Any unauthorized deviations from this procedure must also be documented as a nonconformance with a cause and corrective action described.

11.15 Analytical Documentation

11.15.1 Record all analytical information in the analytical logbook/logsheet which may be in an electronic format, including the analytical data from standards, blanks, LCSs, MS/MSDs, and any corrective actions or modifications to the method.

11.15.2 All standards are logged into a department standard logbook. All standards are assigned a unique number for identification. Logbooks are reviewed by the supervisor or designee.

11.15.3 Documentation, such as all associated instrument printouts (final runs, screens, reruns, QC samples, etc.) and daily calibration data corresponding to all final runs, is available for each data file.

11.15.4 Sample results and associated QC are entered into the LIMs after final

technical review.

12 DATA ANALYSIS AND CALCULATIONS

12.1. ICV percent recoveries are calculated according to the equation:

$$\%R = 100\left(\frac{Found(ICV)}{True(ICV)}\right)$$

12.2. CCV percent recoveries are calculated according to the equation:

$$\%R = 100\left(\frac{Found(CCV)}{True(CCV)}\right)$$

12.3. Matrix Spike Recoveries are calculated according to the following equation:

$$\%R = 100\left(\frac{SSR - SR}{SA}\right)$$

Where:
SSR = Spike Sample Result
SR = Sample Result
SA = Spike Added

12.4. The relative percent difference (RPD) of matrix spike/matrix spike duplicates are calculated according to the following equations:

$$RPD = 100\left[\frac{|MSD - MS|}{\left(\frac{MSD + MS}{2}\right)}\right]$$

Where:
MS = determined spiked sample concentration
MSD = determined matrix spike duplicate concentration

12.5. The final concentration for a digested aqueous sample is calculated as follows:

$$mg/L = \frac{C \times V1 \times D}{V2}$$

Where:

C = Concentration (mg/L) from instrument readout (mean of two exposures)
D = Instrument dilution factor
V1 = Final volume in liters after sample preparation
V2 = Initial volume of sample digested in liters

12.6. The final concentration determined in digested solid samples is calculated as follows:

$$mg / Kg, dry\ weight = \frac{C \times V \times D}{W}$$

Where:
C = Concentration (mg/L) from instrument readout (mean of two exposures)
D = Instrument dilution factor
V = Final volume in liters after sample preparation
W = Weight in Kg of wet sample digested

12.7. The LCS percent recovery is calculated according to the following equation:

$$\%R = 100\left(\frac{Found(LCS)}{True(LCS)}\right)$$

12.8. The dilution test percent difference for each component is calculated as follows:

$$\%Difference = \frac{|I - S|}{I} \times 100$$

Where:
I = Sample result (Instrument reading)
S = Dilution test result (Instrument reading × 5)

12.9. Appropriate factors must be applied to sample values if dilutions are performed.

12.10. Trivalent Chromium

12.10.1. Trivalent chromium (CR^{+3}) is the result obtained by subtracting the hexavalent chromium (CR^{+6}) results for a sample from the total chromium result from that sample. The total chromium result is determined using the procedures in this SOP. The hexavalent chromium result is determined using the procedures in TestAmerica North Canton SOP NC-WC-024.

12.10.2. Reporting Limits

12.10.2.1. The TestAmerica North Canton water reporting limit for trivalent chromium is 0.02 mg/l.

12.10.2.2. The TestAmerica North Canton solid reporting limit for trivalent chromium is 2.0 mg/kg, wet weight.

12.10.3. Calculations: $Cr^{+3} = Cr, total - Cr^{+6}$

13. METHOD PERFORMANCE

13.1. Each laboratory must have initial demonstration of performance data on file for each analyte of interest as described in Section 9.0.

13.2. Refer to Tables I and IA in Appendix A for the list of analytes that may be analyzed using this SOP.

13.3. Method performance is determined by the analysis of MS and MSD samples as well as method blanks and laboratory control samples. The MS or MSD recovery must fall within ± 25 % and the MS/MSD must compare within 20% RPD or within the laboratory's historical acceptance limits. These criteria apply to analyte concentrations greater than or equal to ten times the IDL. Method blanks must meet the criteria specified in Section 9.2. The laboratory control samples must recover within 20% of the true value or within the laboratory's historical acceptance limits.

13.4. Training Qualification

13.4.1 The Group/Team Leader or the Supervisor has the responsibility to ensure that this procedure is performed by an associate who has been properly trained in its use and has the required experience.

14. POLLUTION PREVENTION

14.2. It is TestAmerica's policy to evaluate each method and look for opportunities to minimize waste generated (i.e., examine recycling options, ordering chemicals based on quantity needed, preparation of reagents based on anticipated usage and reagent stability). Employees must abide by the policies in Section 13 of the corporate environmental Health and Safety Manual (CW-E-M-001) for "Waste Management and Pollution Prevention".

15. WASTE MANAGEMENT

15.1. All waste will be disposed of in accordance with Federal, State and Local regulations. Where reasonably feasible, technological changes have been implemented to minimize the potential for pollution of the environment. Employees will abide by this method and the policies in Section 13 of the Corporate Environmental Health and Safety Manual (CW-E-M-001) for "Waste Management and Pollution Prevention."

15.2. Waste Streams Produced by this Method

15.2.1. The following waste streams are produced when this method is carried out:

15.2.2. Acid waste consisting of sample and rinse solution - Any sample waste generated must be collected and disposed of in the acid waste drum located in the Metals Lab.

15.2.3. Standards must be purchased and prepared in volumes consistent with laboratory use to minimize the volume of expired standards to be disposed.

16. REFERENCES

16.1. References

16.1.1. 40 CFR Part 136, Appendix B, 7-5-95, Determination of Method Detection Limits

16.1.2. Test Methods for Evaluating Solid Waste, Physical/Chemical Methods, SW-846, 3rd Edition, Final Update I, July 1992. Method 6010A.

16.1.3. Test Methods for Evaluating Solid Waste, Physical/Chemical Methods, SW-846, 3rd Edition, Final Update III, Revision 2, December 1996. Method 6010B.

16.1.4. Determination of Metals and Trace Elements in Water and Wastes by Inductively Coupled Plasma-Atomic Emission Spectrometry, Revision 4.4, May 1994. Method 200.7

16.1.5. Inductively Coupled Plasma – Atomic Emission Spectrometric Method for Trace Element Analysis of water and wastes Method 200.7, 40 CFR – Chapter I – Part 136 – Appendix C. Electronic version dated September 30, 2002

16.1.6. TestAmerica North Canton Quality Assurance Manual (QAM), current version

16.1.7. TestAmerica Corporate Environmental Health and Safety Manual, CW-E-M-001, and TestAmerica North Canton Facility Addendum and Contingency Plan, current version

16.1.8. Revision History

Historical File:		Revision 2.0: 10/27/97		Revision 0: 01/08/04 (NC-MT-012)
(formerly CORP-MT-0001NC)		Revision 2.1: 04/19/99		
		Revision 3.1: 10/04/00		
		Revision 3.2: 01/19/01		
		Revision 3.3: 12/05/01		

		Revision 3.4: 01/08/04		

16.2. Associated SOPs and Policies, latest version

16.2.1. TestAmerica North Canton QC Program, QA-003

16.2.2. Statistical Evaluation of Data and Development of Control Charts, NC-QA-018

16.2.3. Method Detection Limits and Instrument Detection Limits, NC-QA-021 and CA-Q-S-006

16.2.4. Supplemental Practices for DoD Project Work, NC-QA-016

16.2.5. Hexavalent Chromium (Colorimetric), NC-WC-024

16.2.6. Acid Digestion of Soils, SW846 Method 3050B, NC-IP-010

16.2.7. Acid Digestion of Aqueous Samples by SW846 and MCAWW 200 Series Methods, NC-IP-011Standards and Reagents, NC-QA-017

17. MISCELLANEOUS (TABLES, APPENDICES, ETC.)

17.1. Modifications/Interpretations from reference method

17.1.1. Modifications/interpretations from Methods 6010B and 200.7.

17.1.1.1. TestAmerica North Canton Laboratories use mixed calibration standard solutions purchased from approved vendors instead of using individual mixes prepared in-house as recommended by the subject methods.

17.1.1.2. Methods 200.7 and 6010B state that if the correction routine is operating properly, the determined apparent analyte(s) concentration from analysis of each interference solution must fall within a specific concentration range around the calibration blank. In determining IECs because of lack of definition clarification for "concentration range around the calibration blank," TestAmerica North Canton has adopted the procedure in EPA CLP ILMO4.0.

17.1.1.3. Whenever a new or unusual matrix is encountered, a series of tests be performed prior to reporting concentration data for that analyte. The dilution test helps determine if a chemical or physical

interference exists. Because TestAmerica North Canton laboratories receive no prior information from clients regarding when to expect a new or unusual matrix, TestAmerica North Canton may select to perform a dilution test on one sample in each prep batch. According to the method, the post digestion spike (PDS) determines any potential matrix interferences. At TestAmerica North Canton, matrix interference is determined by evaluating data for the LCS and MS/MSD. TestAmerica North Canton REQUIRES documented, clear guidance when a new or unusual matrix will be received for a project and a request to perform the dilution test or PDS on a client-identified sample.

17.1.2. Modifications from Method 200.7

17.1.2.1. Method 200.7 defines the IDL as the concentration equivalent to a signal due to the analyte, which is equal to three times the standard deviation of a series of ten replicate measurements of the calibration blank signal at the same wavelength. TestAmerica North Canton labs utilize the IDL definition as defined in Section 9.1 of this SOP.

17.1.2.2. The calibration blank is prepared in an acid matrix of 5% HNO_3/5% HCl instead of the specified 2% HNO_3/10% HCl matrix as the former matrix provides for improved performance relative to the wide variety of digestate acid matrices which result from the various EPA preparation protocols applied.

17.1.2.3. Method Section 9.3.4 specifies that "Analysis of the ICV (ICSA/AB) solution immediately following calibration must verify that the instrument is within ± 5% of calibration with a relative standard deviation <3% from replicate integrations ≥ 4". TestAmerica North Canton uses a minimum of two exposures.

17.1.2.4. The 40 CFR version of Method 200.7 requires the instrument check standard to agree within ± 5% of expected values. Also, the 40 CFR version requires the interference check sample to be analyzed at the beginning, end, and at periodic intervals throughout the sample run. At TestAmerica North Canton, the instrument check standard equals the CCV, which must agree within ± 10% of expected values, and the ICSA standards are analyzed only at the beginning of a sample run. TestAmerica's procedures are in line with the Rev. 4.4, May 1994 version of Method 200.7.

17.1.2.5. Section 7.12 of Method 200.7 indicates that the QCS (ICV) must be prepared at a concentration near 1 ppm. The ICV specified in this SOP accommodates the 1 ppm criteria for the majority of analytes. For the remaining analytes, this SOP specifies ICV concentrations

which are appropriate to the range of calibration. The intent of the ICV, verification of calibration standard accuracy, is independent of the ICV concentration used.

17.1.2.6. The ICS criteria applied by this SOP differ from those stated in the method. Method 200.7 Section 10.4 states that results must fall within the established control limits of 3 times the standard deviation of the calibration blank for that analyte. The control limits listed in this SOP are those applicable to the EPA designed solution.

17.1.2.7. Method 200.7 Section 9.3.4 states the CCB must be less than the IDL, but > the lower 3-sigma control limit of the calibration blank. The intent of this requirement is to ensure that the calibration is not drifting at the low end. TestAmerica North Canton has adopted an absolute control limit of ± RL from zero for calibration blank criteria. SOP Section 10.4 provides the detailed corrective action criteria that must be followed.

17.1.3. Modifications from Method 6010B

17.1.3.1. Chapter 1 of SW-846 states that the method blank must not contain any analyte of interest at or above the MDL. This SOP states that the method blank must not contain any analyte of interest at or above the reporting limit. Common lab contaminants are allowed up to two times the reporting limit in the blank following consultation with the client.

17.1.3.2. Method 6010B Section 8.6.1.3 states that the results of the calibration blank are to agree within three times the IDL. If not, repeat the analysis two or more times, and average the results. If the average is not within three standard deviations of the background mean, terminate the analysis, correct the problem, recalibrate, and re-analyze the previous ten samples. The intent of this requirement is to ensure that the calibration is not drifting at the low end. TestAmerica North Canton has adopted an absolute control limit of ± RL from zero for calibration blank criteria. See SOP Section 10.4 for a detailed description of the required corrective action procedures.

17.1.4 Modifications from Method 6010A

17.1.4.1 Chapter 1 of SW846 states the method blank should not contain any analyte of interest at, or above, the MDL. This SOP states the method blank must not contain any analyte of interest at, or above, the reporting limit. Common lab contaminants are allowed up to two times the reporting limit in the blank.

17.1.4.2 Calibration is performed according to instrument manufacturer's recommendations. Method 6010A provides contradictory instructions for instrument calibration by stating to calibrate both according to instrument manufacturer's recommendations as well as to use a blank and three standards. TJA has stated that the use of multiple standards may be detrimental to determinations near the detection limit due to the inability of the linear equation to force-fit through the origin, and recommends the calibration be performed using a blank and one standard. This SOP requires verification of the initial instrument calibration using a CRI at two times the RL, an ICV at 5 - 25% of calibration level, a CCV at 50% of calibration level, and by rerunning the high calibration standard (HCAL) post calibration to demonstrate linearity (See Tables I and IA).

17.1.4.3 Section 5.6 of Method 6010A states the instrument check standard (CCV) should be prepared from a second source standard. This SOP states the CCV will be from the same source as the calibration standards. The purpose of the second source standard is to verify the accuracy of the calibration standards. The intent of this requirement is met through the analysis of a second source ICV standard prior to the analysis of samples. The use of a same source CCV provides for a more accurate and consistent measure of instrument drift from initial calibration.

17.1.4.4 Section 5.7 of Method 6010A states spiking of the ICS solution with analytes is not required if the ICP will display over-correction as a negative number. All TestAmerica instrumentation has this capability, and therefore, the spike analysis is not required. TestAmerica does run a spiked ICSAB, but the analytes are not spiked at the 10x IDL level referenced in Method 6010A. The ICSAB solution run by TestAmerica is based on the design of the ICSA/ICSAB solution provided by EPA directly to contract environmental labs.

17.1.4.5 Method 6010A uses a Quality Control Standard (QCS) on a weekly basis to verify calibration standard accuracy. TestAmerica refers to QCS as an ICV, and the accuracy verification is performed on a daily basis. The QCS described in Method 6010A is made to contain analytes at 10x the IDL. The TestAmerica ICV solution is not made at 10x IDL for all elements as this concentration is not appropriate relative to the standard reporting limits. TestAmerica designed the ICV to be a reliable indicator of calibration standard accuracy by raising the analyte concentrations to a level where the analytical determination is not impacted by low-level curve bias.

Company Confidential and Proprietary

17.1.4.6 Method 6010A states the CCB should be within three times the standard deviations of the average blank reading. The intent of this requirement is to ensure the calibration is not drifting at the low end. In the absence of guidance on how to determine the mean blank level from EPA, TestAmerica has adopted an absolute control limit of ± RL from zero for calibration blank criteria.

Company Confidential and Proprietary

APPENDIX A

TABLES

Company Confidential and Proprietary

TABLE I. Methods 200.7, 6010A, and 6010B Target Analyte List

Element	Symbol	CAS #	Reporting Limit (ug/L) Water	Reporting Limit (mg/kg) Soil
Aluminum	Al	7429-90-5	200	20
Antimony	Sb	7440-36-0	60	6
Arsenic	As	7440-38-2	300	30
Barium	Ba	7440-39-3	200	20
Beryllium	Be	7440-41-7	5.0	0.5
Boron	B	7440-42-8	200	20
Cadmium	Cd	7440-43-9	5.0	0.5
Calcium	Ca	7440-70-2	5000	500
Chromium	Cr	7440-47-3	10	1
Cobalt	Co	7440-48-4	50	5
Copper	Cu	7440-50-8	25	2.5
Iron	Fe	7439-89-6	100	10
Lead	Pb	7439-92-1	100	10
Magnesium	Mg	7439-95-4	5000	500
Manganese	Mn	7439-96-5	15	1.5
Molybdenum	Mo	7439-98-7	40	4
Nickel	Ni	7440-02-0	40	4
Potassium	K	7440-09-7	5000	500
Selenium	Se	7782-49-2	250	25
Silver	Ag	7440-22-4	10	1
Sodium	Na	7440-23-5	5000	500
Thallium	Tl	7440-28-0	2000	200
Vanadium	V	7440-62-2	50	5
Zinc	Zn	7440-66-6	20	2
Tin	Sn	7440-31-5	100	10
Titanium	Ti	7440-32-6	50	5

Company Confidential and Proprietary

TABLE IA. Method 200.7, 6010A, and 6010B Trace ICP Target Analyte List

Element	Symbol	CAS #	Reporting Limit (ug/L) Water	Reporting Limit (mg/kg) Soil
Arsenic	As	7440-38-2	10	1.0
Lead	Pb	7439-92-1	3.0	0.3
Selenium	Se	7782-49-2	5.0	0.5
Thallium	Tl	7440-28-0	10	1.0
Antimony	Sb	7440-36-0	10	1.0
Cadmium	Cd	7440-43-9	2.0	0.2
Silver	Ag	7440-22-4	5.0	0.5
Chromium	Cr	7440-47-3	5.0	0.5

TABLE II. Matrix Spike and Aqueous Laboratory Control Sample Levels

ELEMENT	Concentration (ug/L)
Aluminum	2000
Antimony	500
Arsenic	2000
Barium	2000
Beryllium	50
Cadmium	50
Calcium	50000
Chromium	200
Cobalt	500
Copper	250
Iron	1000
Lead	500
Magnesium	50000
Manganese	500
Molybdenum	1000
Nickel	500
Potassium	50000
Selenium	2000
Silver	50
Sodium	50000
Thallium	2000
Vanadium	500
Zinc	500
Boron	1000
Tin	2000
Titanium	1000

Company Confidential and Proprietary

TABLE III . Trace ICP Calibration and Calibration Verification Standards

Element	Calibration Level	RL (ug/L)	ICV (ug/L)	CCV (ug/L)
Aluminum	50000	200	12500	25000
Antimony	1000	10	250	500
Arsenic	1000	10	250	500
Barium	4000	10	1000	2000
Beryllium	4000	5	1000	2000
Cadmium	1000	2	250	500
Calcium	100000	5000	25000	50000
Chromium	4000	5	1000	2000
Cobalt	4000	50	1000	2000
Copper	4000	25	1000	2000
Iron	50000	100	12500	25000
Lead	1000	3	250	500
Magnesium	100000	5000	25000	50000
Manganese	4000	15	1000	2000
Molybdenum	4000	40	1000	2000
Nickel	4000	40	1000	2000
Potassium	100000	5000	25000	50000
Selenium	1000	5	250	500
Silver	2000	5	500	1000
Sodium	100000	5000	25000	50000
Thallium	2000	10	500	1000
Vanadium	4000	50	1000	2000
Zinc	4000	20	1000	2000
Boron	10000	200	1000	5000
Tin	10000	100	1000	5000
Titanium	10000	50	1000	5000

Company Confidential and Proprietary

TABLE IV. Interference Check Sample Concentrations

Element	ICSA (ug/L)	ICSAB (ug/L)
Aluminum	500000	500000
Antimony	-	1000
Arsenic	-	1000
Barium	-	500
Beryllium	-	500
Cadmium	-	1000
Calcium	500000	500000
Chromium	-	500
Cobalt	-	500
Copper	-	500
Iron	200000	200000
Lead	-	1000
Magnesium	500000	500000
Manganese	-	500
Molybdenum	-	1000
Nickel	-	1000
Potassium	-	10000
Selenium	-	1000
Silver	-	1000
Sodium	-	10000
Thallium	-	1000
Vanadium	-	500
Zinc	-	1000
Tin	-	1000
Boron		1000
Titanium		1000

TABLE V. TCLP Reporting Limits, Regulatory Limits and Matrix Spike Levels

ELEMENT	Reporting Level (ug/L)	Regulatory Limit (ug/L)	Spike Level (ug/L)
Arsenic	500	5000	5000
Barium	10000	100000	50000
Cadmium	100	1000	1000
Chromium	500	5000	5000
Lead	500	5000	5000
Selenium	250	1000	1000
Silver	500	5000	1000

Company Confidential and Proprietary

TABLE VI. Summary of Quality Control Requirements

QC Parameter	Frequency *	Acceptance Criteria	Corrective Action
Two-point Initial Calibration	Beginning of every analytical run, every 24 hours, whenever instrument is modified, or CCV criterion is not met		Terminate analysis. Correct the problem. Prepare new standards. Recalibrate following system performance.
ICV	Beginning of every analytical run.	Method 200.7: 95 - 105 % recovery RSD dupl. exp < 3% Method 6010A: 90 - 110 % recovery Method 6010B: 90 - 110 % recovery RSD dupl. exp < 5%	Terminate analysis. Correct the problem. Recalibrate.
ICB	Beginning of every analytical run, immediately following the ICV.	The result must be within ± RL from zero.	Terminate analysis. Correct the problem. Recalibrate.
CCV	Every 10 samples and at the end of the run.	Method 200.7 & 6010B:90 - 110 % recovery RSD dupl. exp < 5% Method 6010A: 90 - 110 % recovery	Terminate analysis. Correct the problem. Recalibrate and rerun all samples not bracketed by acceptable CCV. Samples < RL can be accepted if the CCV is outside on high side with NCM.
CCB	Immediately following each CCV	The result must be within ± RL from zero	Terminate analysis. Correct the problem. Recalibrate and rerun all samples not bracketed by acceptable CCB. Samples < RL can be accepted if the CCB is outside on high side with NCM.
CRI	Beginning of every run	50-150% recovery (advisory) (required for 6010A)	Evaluate associated samples.
Calibration verification	After the CRI	+/- 5%	Recalibrate

QC Parameter	Frequency *	Acceptance Criteria	Corrective Action
(6010A only)			
ICSA	Beginning of every run (maximum every 8 hours for 6010A)	See Section 9.9.3	See Section 9.9.3
ICSAB	Immediately following each ICSA (maximum every 8 hours for 6010A)	Results must be within 80 - 120% recovery	See Section 9.9.2.
Dilution Test	One per prep batch	For samples > 50 times the IDL, dilutions must agree within 10%	Narrate the possibility of physical or chemical interference per client request.
Method Blank	One per sample preparation batch of up to 20 samples	The result must be less than or equal to the RL. Common lab contaminants may be accepted up to 2x the RL (see Section 9.2). (not applicable for Ohio VAP) Sample results greater than 20 times the blank concentration are acceptable. (not applicable for Ohio VAP) Samples for which the contaminant is < RL may not require redigestion or re-analysis (see Section 9.2).	Redigest and re-analyze samples. Note exceptions under criteria section. See Section 9.2 for additional requirements.
Laboratory Control Sample (LCS)	One per sample preparation batch of up to 20 samples	Aqueous LCS must be within 80 - 120% recovery or in-house control limits. Samples for which the contaminant is < RL and the LCS results are > 120% may not	Terminate analysis. Correct the problem. Re-digest and re-analyze all samples associated with the LCS.

QC Parameter	Frequency *	Acceptance Criteria	Corrective Action
		require redigestion or re-analysis (see Section 9.3)	
Matrix Spike	One per sample preparation batch of up to 20 samples	75 - 125 % recovery or in-house control limits	In the absence of client specific requirements, flag the data. No flag required if sample level is > 4 times the spike added.
Matrix Spike Duplicate	See Matrix Spike	75 - 125 % recovery; RPD ≤ 20%	See Corrective Action for Matrix Spike.

* See Sections 11.6, 11.7, and 11.8 for exact run sequence to be followed.

APPENDIX B CROSS REFERENCE OF TERMS COMMONLY USED IN METHODS EPA 200.7, SW 6010A/6010B, AND TESTAMERICA NORTH CANTON SOP

EPA 200.7	SW 6010A/6010B	TestAmerica North Canton SOP
Calibration blank (CB)	Calibration blank	Initial and continuing calibration blanks (ICB/CCB)
Dilution test	Dilution test	Dilution Test
Instrument detection limit (IDL)	Instrument detection limit (IDL)	Instrument detection limit (IDL)
Instrument performance check (IPC)	Continuing calibration verification (CCV)	Continuing calibration verification (CCV)
Internal standard	Internal standard	Internal standard (IS)
Laboratory duplicates	N/A	N/A
Laboratory fortified blank (LFB)	N/A	Laboratory control sample (LCS)
Laboratory fortified sample matrix (LFM)	Matrix spike and matrix spike duplicate (MS/MSD)	Matrix spike and matrix spike duplicate (MS/MSD)
Laboratory reagent blank (LRB)	Method blank	Method or Prep blank (MB)
Linear dynamic range (LDR)	Linear dynamic range (LDR)	Linear dynamic range (LDR)
Method detection limit (MDL)	Method detection limit (MDL)	Method detection limit (MDL)
Quality control sample (QCS)	Check standard or Initial calibration verification (ICV)	Initial calibration verification (ICV)
Spectral interference check solution (SIC)	Interference check solution (ICS)	Interference check solution (ICSA/ICSAB)

Company Confidential and Proprietary

APPENDIX C - TROUBLESHOOTING GUIDE

Problem	Possible Cause/ Solution
High Blanks	Increase rinse time Clean or replace tip Clean or replace torch Clean or replace sample tubing Clean or replace nebulizer Clean or replace mixing chamber
Instrument Drift	Replace torch (Crack) Clean or replace nebulizer (blockage) Replace pump tubing Room humidity too high Clean torch tip (salt buildup) Check for argon leaks Reprofile
Erratic Readings, Flickering Torch or High RSD	Check for argon leaks Adjust sample carrier gas Replace tubing (clogged) Check drainage (back pressure changing) Increase uptake time (too short) Increase flush time (too short) Clean nebulizer, torch or spray chamber Increase sample volume introduced Check that autosampler tubes are full Sample or dilution of sample not mixed Increase integration time (too short) Realign torch Reduce amount of tubing connectors
Standards reading twice normal absorbance or concentration	Incorrect standard used Incorrect dilution performed

Company Confidential and Proprietary

APPENDIX D - CONTAMINATION CONTROL GUIDELINES

The following procedures are strongly recommended to prevent contamination:

All glassware must be washed with detergent and tap water and rinsed with 1:1 nitric acid followed by deionized water.

Proper laboratory housekeeping is essential in the reduction of contamination in the Metals Lab. All work areas must be kept scrupulously clean.

Powdered Gloves must not be used in the Metals Lab since the powder contains silica and zinc as well as other metallic analytes. Glassware must be periodically checked for cracks and etches and discarded if found. Etched glassware can cause cross contamination of any metallic analytes.

The following are helpful hints in the identification of the source of contaminants:

Yellow pipette tips and volumetric caps can sometimes contain cadmium.

Some sample cups have been found to contain lead.

New glassware especially beakers can be a source of silica and boron.

Reagents or standards can contain contaminants or be contaminated with the improper use of a pipette.

Improper cleaning of glassware can cause contamination.

Company Confidential and Proprietary

APPENDIX E - PREVENTATIVE MAINTENANCE

A maintenance log is used to record when maintenance is performed on instruments. When an instrument problem occurs, indicate the date, time and instrument number. Then identify the problem and corrective action in the Maintenance Log.

The following procedures are required to ensure that that the instrument is fully operational:

	Change sample pump tubing and pump windings
As Needed	Check rinse solution and fill if needed
	Check waste containers and empty if needed
	Check sample capillary tubing is clean and in good condition
	Check droplet size to verify nebulizer is not clogged.
	Check sample flow for cross flow nebulizer
	Check pressure for vacuum systems
	Clean plasma torch assembly to remove accumulated deposits
	Clean nebulizer and drain chamber; keep free-flowing to maintain optimum performance
	Replace peristaltic pump tubing, sample capillary tubing and autosampler sipper probe
	Apply silicon spray on autosampler tracks
	Check water level in cool flow
	Change oil for vacuum systems
	Replace coolant water filter (may require more or less frequently depending on quality of cooling water)

Company Confidential and Proprietary

APPENDIX F ICP Operating Instructions

ICP Analysis (TJA 61E) Example

1. SETUP

a. Plasma Control Panel (enter)

b. (F1)-Startup

c. (F9)-Continue

d. (F2)-Levels

1. Change auxiliary gas to low – use space bar to toggle
2. Change nebulizer gas flow to 0.5 L/min.
3. Change pump rate to 130
4. Esc
5. Allow instrument to warm up approximately 30 minutes.

2. DEVELOPMENT

a. Methods (enter)

b. Enter method name

c. (F3)-Method Info.

d. Change file name

e. (F9)-Done

f. (F9)-Done/Keep

3. OPERATION

a. Analysis (enter)

b. (F5)-Profile

1. (F3)-Automatic
2. (F1)-Run

3. If peak position is greater than ± 0.05 units from the center peak position, you must adjust the profile. If it is within ± 0.05 units, press (F9)-done.

4. To adjust select (F1)-CalcSS and enter current vernier position. (enter)

5. Adjust to new vernier position (F9)-done

6. Rerun profile until peak position is ± 0.05 units.

7. (F9) - Done

c. Autosampler (F9)

1. Enter method name (enter)

2. Enter autosampler table name (enter)

3. (F1) - Run

Company Confidential and Proprietary

Title: PREPARATION AND ANALYSIS OF MERCURY IN AQUEOUS SAMPLES BY COLD VAPOR ATOMIC ABSORPTION, SW846 7470A, AND MCAWW 245.1

[Method: EPA MCAWW Method 245.1 and SW846 Method 7470A]

Approvals (Signature/Date):

Technology Specialist	1-2-09 Date	Health & Safety Coordinator	1/02/09 Date
Quality Assurance Manager	1/5/09 Date	Laboratory Director	1/6/09 Date
Technical Director	1/2/09 Date		

This SOP was previously identified as SOP No. CORP-MT-0005NC, Rev 2.6, dated 07/10/07

Copyright Information:

This documentation has been prepared by TestAmerica Analytical Testing Corp. and its affiliates ("TestAmerica"), solely for their own use and the use of their customers in evaluating their qualifications and capabilities in connection with a particular project. The user of this document agrees by its acceptance to return it to TestAmerica upon request and not to reproduce, copy, lend, or otherwise disclose its contents, directly or indirectly, and not to use if for any other purpose other than that for which it was specifically provided. The user also agrees that where consultants or other outside parties are involved in the evaluation process, access to these documents shall not be given to said parties unless those parties also specifically agree to these conditions.

THIS DOCUMENT CONTAINS VALUABLE CONFIDENTIAL AND PROPRIETARY INFORMATION. DISCLOSURE, USE OR REPRODUCTION OF THESE MATERIALS WITHOUT THE WRITTEN AUTHORIZATION OF TESTAMERICA IS STRICTLY PROHIBITED. THIS UNPUBLISHED WORK BY TESTAMERICA IS PROTECTED BY STATE AND FEDERAL LAW OF THE UNITED STATES. IF PUBLICATION OF THIS WORK SHOULD OCCUR THE FOLLOWING NOTICE SHALL APPLY: ©COPYRIGHT 2008 TESTAMERICA ANALYTICAL TESTING CORP. ALL RIGHTS RESERVED.

Facility Distribution No. _____ **Distributed To:** _____

TABLE OF CONTENTS

1. SCOPE AND APPLICATION 3
2. SUMMARY OF METHOD 3
3. DEFINITIONS 4
4. INTERFERENCES 4
5. SAFETY 5
6. EQUIPMENT AND SUPPLIES 7
7. REAGENTS AND STANDARDS 8
8. SAMPLE COLLECTION, PRESERVATION, AND STORAGE 9
9. QUALITY CONTROL 9
10. CALIBRATION AND STANDARDIZATION 12
11. PROCEDURE 13
12. DATA ANALYSIS AND CALCULATIONS 16
13. METHOD PERFORMANCE 17
14. POLLUTION PREVENTION 18
15. WASTE MANAGEMENT 18
16. REFERENCES 18
17. MISCELLANEOUS (TABLES, APPENDICES, ETC.) 19

LIST OF APPENDICES

APPENDIX A - TABLES 21
APPENDIX B - CONTAMINATION CONTROL GUIDELINES 25
APPENDIX C - PREVENTATIVE MAINTENANCE 26
APPENDIX D – INSTRUMENT SETUP 26

Company Confidential & Proprietary

1. SCOPE AND APPLICATION

1.1 This procedure describes the preparation and analysis of mercury (Hg, CAS # 7439-97-6) by Cold Vapor Atomic Absorption Spectroscopy (CVAA) using SW846 Method 7470A and MCAWW Method 245.1.

1.2 The associated LIMs method codes are BL (Method 245.1) and O8 (Method 7470A).

1.3 CVAA analysis provides for the determination of total mercury (organic and inorganic). The combination of the oxidants, potassium permanganate, and potassium persulfate has been found to give 100% recovery with both types of compounds. Detection limits, sensitivity, and optimum concentration ranges for mercury analysis will vary with the matrices, instrumentation, and volume of sample used.

1.4 Method 7470A is applicable to the preparation and analysis of mercury in ground water, aqueous samples, TCLP, and other leachates/extracts. Certain solid and sludge type wastes may also be analyzed; however, Method 7471A (see NC-MT-011) is usually the method of choice. All matrices require sample preparation prior to analysis.

1.5 Method 245.1 is applicable to the determination of mercury in drinking, surface and saline waters, and domestic and industrial wastes. All matrices require sample preparation prior to analysis.

1.6 The TestAmerica North Canton reporting limit for mercury in aqueous matrices is 0.0002 mg/L except for TCLP or SPLP leachates for which the reporting limit is 0.002 mg/L.

1.7 This document accurately reflects current laboratory Standard Operating Procedures (SOP) as of the date above. All facility SOPs are maintained and updated as necessary.

2.0 SUMMARY OF METHOD

2.1 This SOP describes a technique for the determination of mercury in solution. The procedure is a physical method based on the absorption of radiation at 253.7 nm by mercury vapor. A representative portion of the sample is digested in sulfuric and nitric acids. Organic mercury compounds are oxidized with potassium permanganate and potassium persulfate, and the mercury reduced to its elemental state with stannous chloride and aerated from solution in a closed system. The mercury vapor passes through a cell positioned in the light path of an atomic absorption spectrophotometer. Absorbance is measured as a function of mercury concentration. Concentration of the analyte in the sample is determined by comparison of the sample absorbance to the calibration curve

Company Confidential & Proprietary

(absorbance vs. concentration).

3.0 DEFINITIONS

3.1 Refer to the glossary in the TestAmerica North Canton Quality Assurance Manual (QAM), current version.

4.0 INTERFERENCES

4.1 Method interferences may be caused by contaminants in solvents, reagents, glassware, and other processing apparatus that lead to discrete artifacts. All of these materials must be routinely demonstrated to be free from interferences under conditions of the analysis by running laboratory method blanks as described in the Quality Control section. All glassware is cleaned per SOP NC-QA-014. Specific selection of reagents may be required to avoid introduction of contaminants.

4.2 Potassium permanganate, which is used to breakdown organic mercury compounds, also eliminates possible interferences from sulfide. Concentrations as high as 20 mg/L of sulfide as sodium sulfide do not interfere with the recovery of inorganic mercury from reagent water.

4.3 Copper has also been reported to interfere; however, copper concentrations as high as 10 mg/L had no effect on the recovery of mercury from spiked samples.

4.4 Chlorides can cause a positive interference. Seawaters, brines, and industrial effluents high in chlorides require additional permanganate (maximum 25 mL); because during the oxidation step, chlorides are converted to free chlorine, which also absorbs radiation at 253.7 nm.

Note: Sufficient addition of permanganate is apparent when the purple color persists at least 15 minutes. Some samples may require dilution prior to digestion due to extremely high concentrations of chloride.

4.5 Interference from certain volatile organic materials that absorb at this wavelength may also occur. While the possibility of absorption from certain organic substances present in the sample does exist, this problem is not routinely encountered. This is mentioned only to caution the analyst of the possibility.

4.6 Samples containing high concentrations of oxidizing organic materials, as evidenced by high COD levels, may not be completely oxidized by this procedure. When this occurs, the recovery of mercury will be low.

Company Confidential & Proprietary

4.7 The most common interference is laboratory contamination, which may arise from impure reagents, dirty glassware, improper sample transfers, dirty work areas, etc. Be aware of potential sources of contamination, and take appropriate measures to minimize or avoid them. Refer to Appendix B for Contamination Control Guidelines.

5.0 SAFETY

5.1 Employees must abide by the policies and procedures in the Corporate Environmental Health and Safety Manual and this document.

5.2 The following is a list of the materials used in this method, which have a serious or significant hazard rating. NOTE: This list does not include all materials used in the method. The table contains a summary of the primary hazards listed in the MSDS for each of the materials listed in the table. A complete list of materials used in the method can be found in the Reagents and Standards section. Employees must review the information in the MSDS for each material before using it for the first time or when there are major changes to the MSDS.

Material (1)	Hazards	Exposure Limit (2)	Signs and symptoms of exposure
Sulfuric Acid	Corrosive Oxidizer Dehydrator Poison	1 Mg/M3-TWA	Inhalation produces damaging effects on the mucous membranes and upper respiratory tract. Symptoms may include irritation of the nose and throat, and labored breathing. Symptoms of redness, pain, and severe burn can occur. Contact can cause blurred vision, redness, pain and severe tissue burns. Can cause blindness.
Nitric Acid	Corrosive Oxidizer Poison	2 ppm-TWA 4 ppm-STEL	Nitric acid is extremely hazardous; it is corrosive, reactive, an oxidizer, and a poison. Inhalation of vapors can cause breathing difficulties and lead to pneumonia and pulmonary edema, which may be fatal. Other symptoms may include coughing, choking, and irritation of the nose, throat, and respiratory tract. Can cause redness, pain, and severe skin burns. Concentrated solutions cause deep ulcers and stain skin a yellow or yellow-brown color. Vapors are irritating and may cause damage to the eyes. Contact may cause severe burns and permanent eye damage.
Hydrochloric Acid	Corrosive Poison	5 PPM-Ceiling	Inhalation of vapors can cause coughing, choking, inflammation of the nose, throat, and upper respiratory tract, and in severe cases, pulmonary edema, circulatory failure, and death. Can cause redness, pain, and severe skin burns. Vapors are irritating and may cause damage to the eyes. Contact may cause severe burns and permanent eye damage.
Potassium	Oxidizer	5 Mg/M3 for Mn	Causes irritation to the respiratory tract. Symptoms may include

Permanganate		Compounds	coughing, shortness of breath. Dry crystals and concentrated solutions are caustic causing redness, pain, severe burns, brown stains in the contact area and possible hardening of outer skin layer. Diluted solutions are only mildly irritating to the skin. Eye contact with crystals (dusts) and concentrated solutions causes severe irritation, redness, and blurred vision and can cause severe damage, possibly permanent.
Mercury (1,000 ppm in Reagent)	Oxidizer Corrosive Poison	0.1 Mg/M3 Ceiling (Mercury Compounds)	Extremely toxic. Causes irritation to the respiratory tract. Causes irritation. Symptoms include redness and pain. May cause burns. May cause sensitization. Can be absorbed through the skin with symptoms to parallel ingestion. May affect the central nervous system. Causes irritation and burns to eyes. Symptoms include redness, pain, and blurred vision; may cause serious and permanent eye damage.
Hydroxyl-amine Hydro-chloride	Corrosive Poison	None	Extremely destructive to tissues of the mucous membranes and upper respiratory tract. Corrosive to the eyes. Irritant and possible sensitizer. May cause burns to the skin.
Potassium Persulfate	Oxidizer	None	Causes irritation to the respiratory tract. Symptoms may include coughing, shortness of breath. Causes irritation to skin and eyes. Symptoms include redness, itching, and pain. May cause dermatitis, burns, and moderate skin necrosis.
1 – Always add acid to water to prevent violent reactions.			
2 – Exposure limit refers to the OSHA regulatory exposure limit.			

5.3 Eye protection that protects against splash, laboratory coat, and appropriate gloves must be worn while samples, standards, solvents, and reagents are being handled. Cut-resistant gloves must be worn doing any other task that presents a strong possibility of getting cut. Disposable gloves that have been contaminated must be removed and discarded; other gloves must be cleaned immediately.

5.4 Exposure to chemicals must be maintained **as low as reasonably achievable.** Solvent and waste containers must be kept closed unless transfers are being made. All samples with stickers that read "Caution/Use Hood!" **must** be opened in the hood.

5.5 All work must be stopped in the event of a known or potential compromise to the health and safety of a TestAmerica North Canton associate. The situation must be reported **immediately** to a Laboratory Supervisor and the EH&S Coordinator.

5.6 Do not look directly into the beam of the Hg lamp. The UV light that these lamps radiate is harmful to the eyes.

5.7 Cylinders of compressed gas must be handled with caution in accordance with local regulations. It is recommended that, wherever possible, cylinders are located outside the laboratory and the gas led to the instrument through approved lines.

5.8 The CVAA apparatus must be properly vented to remove potentially harmful fumes generated during sample analysis.

6. EQUIPMENT AND SUPPLIES

6.1 Temperature controlled water bath capable of maintaining a temperature of 90-95 °C.

6.2 Atomic Absorption Spectrophotometer equipped with:

6.2.1 Absorption cell with quartz end windows perpendicular to the longitudinal axis. Dimensions of the cell must result in sufficient sensitivity to meet the SOP-defined reporting limit. The quartz windows must be maintained to provide accurate measurements. Any scratches or fingerprints can alter the absorption of UV radiation.

6.2.2 Mercury-specific hollow cathode lamp (HCL) or electrodeless discharge lamp (EDL)

6.2.3 Peristaltic pump, which can deliver 1 L/min, air

6.2.4 Flowmeter capable of measuring an airflow of 1 L/min.

6.2.5 Recorder or printer

6.2.6 Drying device to prevent condensation in cell.

6.3 8oz. HDPE Plastic bottles

6.4 Nitrogen or argon gas supply, welding grade, or equivalent

6.5 Calibrated automatic pipettes

6.6 Class A volumetric flasks

6.7 Thermometer (capable of accurate readings at 95 °C)

6.8 Disposable cups or tubes

7. REAGENTS AND STANDARDS

7.1 Reagent water must be produced by a Millipore DI system or equivalent. Reagent water must be free of the analytes of interest as demonstrated through the analysis of method blanks.

7.2 Stock (10 ppm) mercury standards are purchased as custom solutions. All standards must be stored in FEP fluorocarbon or previously unused polyethylene or polypropylene bottles. Stock standard solutions must be replaced prior to the expiration date provided by the manufacturer. If no expiration date is provided, the stock solutions may be used for up to one year and must be replaced sooner if verification from an independent source indicates a problem. Additional information can be found in SOP NC-QA-017. . Refer to the Standards Logbook for additional detail on the preparation of standards.

7.3 Working mercury standard (0.1 ppm): Take 1 mL of the stock mercury standard (Section 7.2) and dilute to 100 mL with reagent water. The working mercury standard must be made daily and must be prepared in a matrix of 0.15% HNO_3. This acid (150 uL of concentrated HNO_3) must be added to the flask/bottle before the addition of the stock standard aliquot. . Refer to the Standards Logbook for additional detail on the preparation of standards.

7.4 The calibration standards listed in Table I must be prepared fresh daily from the working standard (Section 7.3) by transferring 0, 0.2, 0.5, 1.0, 5.0 and 10.0 mL aliquots of the working mercury standard into 100 mL flasks and diluting to volume with reagent water. The LCS solution is prepared by transferring 5.0 mL of the working standard into a 100 mL flask and dilution to volume with reagent water. Refer to the Standards Logbook for additional detail on the preparation of standards.

7.5 The initial calibration verification standard must be made from a different stock solution than that of the calibration standards.

7.6 Refer to Table I (Appendix A) for details regarding the working standard concentrations for calibration, calibration verification, and spiking solutions. All standards must be processed through the entire analytical procedure including sample preparation.

7.7 Nitric acid (HNO_3), concentrated, traces metal grade or better

7.8 Sulfuric acid (H_2SO_4), concentrated, traces metal grade or better

7.9 Stannous chloride solution: Add 50 g ± 0.5g of stannous chloride and 25 mL of concentrated hydrochloric acid to a 500mL volumetric flask and bring to volume with deionized water.

7.10 Sodium chloride-hydroxylamine hydrochloride solution: Add 240 g ± 0.5g of sodium chloride and 240 g ± 0.5g of hydroxylamine hydrochloride to every 2000 mL of reagent water.

7.11 Potassium permanganate, 5% solution (w/v): Dissolve 100 g of potassium permanganate for every 2000 mL of reagent water.

7.12 Potassium persulfate, 5% solution (w/v): Dissolve 100 g of potassium persulfate for every 2000 mL of reagent water.

8. SAMPLE COLLECTION, PRESERVATION, AND STORAGE

8.1 Sample holding time for mercury is 28 days from time of sample collection to the time of analysis.

8.2 Aqueous samples are preserved with nitric acid to a pH of <2 and may be stored in either plastic or glass. Refrigeration is not required. Preservation must be verified prior to analysis.

9. QUALITY CONTROL

Table II (Appendix A) provides a summary of quality control requirements including type, frequency, acceptance criteria, and corrective action.

9.2 Initial Demonstration of Capability

9.2.1 Initial Demonstration Study. This requires the analysis of four QC check samples. The QC check sample is a well-characterized, laboratory-generated sample used to monitor method performance. The results of the initial demonstration study must be acceptable before analysis of samples may begin.

9.2.1.1 Four aliquots of the check sample (LCS) are prepared and analyzed using the procedures detailed in this SOP and the determinative SOPs.

9.3 Preparation Batch. A batch is a group of no greater than 20 samples excluding QC Samples (LCS, Method Blank, MS, MSD), which are processed similarly, with respect to the procedure. All sample setups must be initiated within a 24-hour period from the initial preparation or extraction and without interruption of the process. All samples within the batch must be treated with the same lots of reagents and the same processes. In some cases, at client request, it may be appropriate to process a matrix spike and sample duplicate in place of the MS/MSD. If clients specify specific samples for MS/MSD, the batch may contain multiple MS/MSD pairs.

Company Confidential & Proprietary

9.4 Method Blank (MB). One method blank must be processed with each preparation batch. The method blank consists of reagent water containing all reagents specific to the method that is carried through the entire analytical procedure, including preparation and analysis. The method blank is used to identify any system and process interferences or contamination of the analytical system that may lead to the reporting of elevated analyte concentrations or false positive data. The method blank must not contain any analyte of interest at, or above, the reporting limit or at, or above, 5% of the measured concentration of that analyte in associated samples, whichever is higher (sample result must be a minimum of 20 times higher than the blank contamination level). Note: For Ohio VAP projects, the result must be below the reporting limit or samples must be redigested unless the samples are non-detect.

- Repreparation and re-analysis of all samples associated with an unacceptable method blank is required when reportable concentrations are determined in the samples (see exception noted above).

- If there is no analyte greater than the RL in the samples associated with an unacceptable method blank, the data may be reported with qualifiers. **Such action must be addressed in the project narrative.**

- If the above criteria are not met and re-analysis is not possible, then the sample data must be qualified. **This anomaly must be addressed in the project narrative.**

9.5 Laboratory Control Sample (LCS). One aqueous LCS must be processed with each preparation batch. The LCS is used to monitor the accuracy of the analytical process. Ongoing monitoring of the LCS results provides evidence that the laboratory is performing the method within acceptable accuracy and precision guidelines. The LCS must be carried through the entire analytical procedure. If the LCS is outside established control limits, the system is out of control and corrective action must occur. See Section 12 for the LCS calculation.

- In the instance where the LCS recovery is greater than the upper control limit and the sample results are less than RL, the data may be reported. Such action must be addressed in the project narrative.

- In the event an MS/MSD analysis is not possible, a Laboratory Control Sample Duplicate (LCSD) must be analyzed. The LCSD recovery is evaluated using the same control limits as the LCS. The RPD of the LCS and LCSD must be compared to the matrix spike RPD limits.

- Corrective action must be repreparation and re-analysis of the batch unless the client agrees that other corrective action is acceptable. For Ohio VAP projects, the corrective action must be repreparation and reanalysis of the batch.

Company Confidential & Proprietary

9.6 Additional information on QC samples can be found in QA Policy QA-003. Ohio VAP projects must reference this SOP instead of policy QA-003 for information on QC samples.

9.7 Matrix Spike/Matrix Spike Duplicate (MS/MSD). One MS/MSD pair must be processed for each preparation batch. A matrix spike (MS) is a field sample to which known concentrations of target analytes have been added. A matrix spike duplicate (MSD) is a second aliquot of the same sample (spiked identically as the MS) prepared and analyzed along with the sample and matrix spike. Some client-specific data quality objectives (DQOs) may require the use of sample duplicates in place of or in addition to MS/MSDs. The MS/MSD results are used to determine the effect of a matrix on the precision and accuracy of the analytical process. Due to the potential variability of the matrix of each sample, these results may have immediate bearing only on the specific sample spiked. Samples identified as field blanks cannot be used for MS/MSD analysis. Spiking levels are provided in Table I (Appendix A).

- If analyte recovery or RPD falls outside the acceptance range, the recovery of that analyte must be in control for the LCS. Until in-house control limits are established, a control limit of 75 - 125 % recovery for Method 7470A, 70 – 130% for Method 245.1, and 20% RPD must be applied to the MS/MSD. See Section 12 for the MS/MSD and RPD calculation. If the LCS recovery is within limits, then the laboratory operation is in control and the results may be accepted. If the recovery of the LCS is outside limits, corrective action must be taken. Corrective action must include repreparation and re-analysis of the batch. MS/MSD results, which fall outside the control limits, must be addressed in the narrative.

- If the native analyte concentration in the MS/MSD exceeds 4x the spike level for that analyte, the recovery data is reported as “amount” MSB. The Exception Code is changed to NC. The following two footnotes will appear on the report page—“NC: The recovery and/or RPD were not calculated.”, and “MSB: The recovery and RPD were not calculated, because the sample amount was greater than four times the spike amount.”

- If an MS/MSD is not possible due to limited sample volume, then a laboratory control sample duplicate (LCSD) must be analyzed. The RPD of the LCS and LCSD must be compared to the matrix spike RPD limits.

9.8 Control Limits

9.8.1 Control limits are established by the laboratory as described in SOP NC-QA-018.

9.8.2 Laboratory control limits are internally generated and updated periodically unless method specified. Control limits are easily accessible via LIMS (QC Browser

program).

9.9 Method Detection Limits (MDLs) and MDL Checks

9.9.1 MDLs and MDL Checks are established by the laboratory as described in SOPs NC-QA-021 and CA-Q-S-006.

9.9.2 MDLs are easily accessible via LIMIS (QC Browser program).

9.10 Nonconformance and Corrective Action

9.10.1 Any deviations from QC procedures must be documented as a nonconformance with applicable cause and corrective action approved by the facility QA Manager. Procedural deviations are not allowed for Ohio VAP Projects.

10. CALIBRATION AND STANDARDIZATION

10.1 Calibration standards must be processed through the preparation procedure as described in Section 11.1.

10.2 Calibration must be performed daily (every 24 hours) and each time the instrument is set up. The instrument calibration date and time must be included in the raw data.

10.3 Set up the instrument with the operating parameters recommended by the manufacturer and listed in Appendix D. Allow the instrument to become thermally stable before beginning calibration (approximately 30 minutes of warm-up is required).

10.4 Calibrate the instrument according to instrument manufacturer's instructions, using a minimum of five standards and a blank. One standard must be at, or below, the reporting limit. Analyze standards in ascending order beginning with the blank. Refer to Section 7 and Table I for additional information on preparing calibration standards and calibration levels.

10.5 The calibration curve must have a correlation coefficient of ≥0.995, or the instrument must be stopped and recalibrated prior to running samples. Sample results can not be reported from a curve with an unacceptable correlation coefficient. NOTE: If any digested standard does not meet criteria, all Ohio VAP samples associated with that curve must be redigested.

10.6 Initial Calibration Verification (ICV/ICB). Calibration accuracy is verified by analyzing a second source standard (ICV). For Method 7470A, the ICV result must fall within 10% of the true value for that solution. See Section 12 for the ICV calculation. An ICB is analyzed immediately following the ICV to monitor low-level accuracy and system

cleanliness. The ICB result must fall within ± the reporting limit (RL) from zero. If either the ICV or ICB fail to meet criteria, the analysis must be terminated, the problem corrected, and the instrument recalibrated (see Section 11.2.7 for required run sequence.) If the cause of the ICV or ICB failure was not directly instrument related, the corrective action must include repreparation of the ICV, ICB, CRA, CCV, and CCB with the calibration curve. For Ohio VAP, the sample batch must be redigested.

10.7 Continuing Calibration Verification (CCV/CCB). Calibration accuracy is monitored throughout the analytical run through the analysis of a known standard after every 10 samples. The CCV must be a mid-range standard at a concentration other than that of the ICV. For Method 245.1, the CCV must be 5% immediately following the calibration. All other CCVs must be 80 – 120%. See Section 12 for the CCV calculation. A CCB is analyzed immediately following each CCV (see Section 11.2.7 for required run sequence.) The CCB result must fall within ± RL from zero. Each CCV and CCB analyzed must reflect the conditions of analysis of all associated samples. If the CCV/CCB is biased high and the sample results associated with the CCV/CCB are below the requested reporting limit, then the results can be reported. Sample results may only be reported when bracketed by valid CCV/CCB pairs.

10.8 Detection Limit Standard (CRA). To verify linearity at the reporting limit, a CRA standard is run at the beginning of each sample analysis run after the ICV/ICB. The CRA standard mercury concentration is 0.2 ug/L. Recommended recovery must be ± 50% of the true value, or the standard is either rerun or the problem corrected and the instrument recalibrated. The CRA is only required when requested.

11. PROCEDURE

11.1 Sample Preparation (For DoD work, refer to SOP NC-QA-016 for specific details.)

11.1.1 All calibration and calibration verification standards (ICV, ICB, CCV, CCB) are processed through the digestion procedure as well as the field samples. Transfer 0, 0.2, 0.5, 1.0, 5.0 and 10.0 mL aliquots of the working standard (Section 7.3) into a series of 100 ml class A volumetrics, then dilute to volume. For the ICV, use a 2.5 ml aliquot of the working standard. The ICV working standard must be made from a source other than that used for the calibration standards. For the CCV, transfer a 5 mL aliquot of the working standard into a Class A volumetric, then dilute to volume. The Method Blank consists of 100 mL of reagent water.

Note: Alternate volumes of standard may be prepared as long as the accuracy and final standard concentrations as detailed in Table I are maintained.

11.1.2 Transfer 100 mL of well-mixed sample or standard to a clean sample digestion

bottle.

Note: Reduced sample volumes can be used as long as a representative sample can be obtained and the reagent levels are adjusted to maintain the same sample to reagent ratio. All samples and standards must be processed similarly.

Note: Spiking is done before the addition of acids or reagents.

11.1.3 Add 5 mL of concentrated H_2SO_4 and 2.5 mL of concentrated HNO_3 mixing after each addition.

11.1.4 Add 15 mL of potassium permanganate solution. For samples high in organic materials or chlorides, additional permanganate may be added. Shake and add additional portions of permanganate solution until a purple color persists for at least 15 minutes. If after the addition of up to 25-mL additional permanganate the color does not persist, sample dilution prior to re-analysis may be required.

Note: The sample dilution resultant from the addition of more than the original aliquot of permanganate solution must be compensated for in the final calculation.

11.1.5 Add 8 mL of potassium persulfate solution, cover, and heat for two hours in a water bath at 90 - 95 °C.

11.1.6 Cool samples.

11.2 Sample Analysis

11.2.1 Refer to the Appendix D of this SOP for detailed setup and operation protocols.

11.2.2 When ready to begin analysis, add 6 mL of sodium chloride-hydroxylamine hydrochloride solution to the samples to reduce the excess permanganate (the permanganate has been reduced when no purple color remains).

11.2.3 Automated determination: Follow instructions provided by the instrument manufacturer.

11.2.4 Perform a linear regression analysis of the calibration standards by plotting maximum response of the standards vs. concentration of mercury. Determine the mercury concentration in the samples from the linear regression fit of the calibration curve. Calibration using computer or calculation based regression curve fitting techniques on concentration/response data is acceptable. See Section 10.5 for calibration acceptance criteria.

11.2.5 All measurements must fall within the defined calibration range to be valid. Dilute and re-analyze all samples for analytes that exceed the highest calibration standard.

11.2.6 If the sample results are negative and the absolute value of the negative result is greater than the reporting limit, the sample must be diluted and/or re-analyzed.

11.2.7 The following run sequence is consistent with 7470A and 245.1:

Instrument Calibration
ICV
ICB
CRA if required
CCV
CCB
10 samples
CCV
CCB
Repeat sequence of 10 samples between CCV/CCB pairs as required to complete run.
CCV
CCB

Refer to Quality Control Section 9.0 and Table II (Appendix A) for Quality Control criteria to apply to Methods 7470A and 245.1.

11.3 To facilitate the early identification of QC failures and samples requiring rerun, it is strongly recommended that sample data are reviewed periodically throughout the run.

11.4 Guidelines are provided in the appendices on procedures to minimize contamination of samples and standards, preventive maintenance, and troubleshooting. Refer to Appendices B and C for additional information.

11.5 Analytical Documentation

11.5.1 Record all analytical information in the analytical logbook/logsheet which may be in an electronic format, including the analytical data from standards, blanks, LCSs, MS/MSDs, and any corrective actions or modifications to the method.

11.5.2 All standards are logged into a department standard logbook. All standards are assigned a unique number for identification. Logbooks are reviewed by the supervisor or designee.

11.5.3 Documentation such as all associated instrument printouts (final runs, screens,

reruns, QC samples, etc.) and daily calibration data corresponding to all final runs is available for each data file.

11.5.4 Sample results and associated QC are entered into LIMs after final technical review.

11.6 One-time procedural variations are allowed only if deemed necessary in the professional judgment of supervision to accommodate variation in sample matrix, chemistry, sample size, or other parameters. Any variation in procedure must be completely documented using a Nonconformance Memo and is approved by a Technical Specialist and QA Manager. The Nonconformance Memo must be filed in the project file.

11.7 Any unauthorized deviations from this procedure must also be documented as a nonconformance with a cause and corrective action described. Procedural deviations are not allowed for Ohio VAP projects.

12 DATA ANALYSIS AND CALCULATIONS

12.1 ICV percent recoveries are calculated according to the equation:

$$\%R = 100\left(\frac{Found(ICV)}{True(ICV)}\right)$$

12.2 CCV percent recoveries are calculated according to the equation:

$$\%R = 100\left(\frac{Found(CCV)}{True(CCV)}\right)$$

12.3 Matrix spike recoveries are calculated according to the following equation:

$$\%R = 100\left(\frac{SSR - SR}{SA}\right)$$

Where:
SSR = Spike Sample Result
SR = Sample Result
SA = Spike Added

12.4 The relative percent difference (RPD) of matrix spike/matrix spike duplicates or sample duplicates are calculated according to the following equations:

$$RPD = 100\left[\frac{|MSD - MS|}{\left(\frac{MSD + MS}{2}\right)}\right]$$

Where:

MS = determined spiked sample concentration
MSD = determined matrix spike duplicate concentration

$$RPD = 100\left[\frac{|DU1 - DU2|}{\left(\frac{DU1 + DU2}{2}\right)}\right]$$

Where:

DU1 = Sample result
DU2 = Sample duplicate result

12.5 The final concentration for an aqueous sample is calculated as follows:

$$mg/L = C \times D$$

Where:

C = Concentration (mg/L) from instrument readout
D = Instrument dilution factor

12.6 The LCS percent recovery is calculated according to the following equation:

$$\%R = 100\left(\frac{Found(LCS)}{True(LCS)}\right)$$

12.7 Appropriate factors must be applied to sample values if dilutions are performed.

12.8 Additional equations and calculations are listed in the following SOPs: Calibration Curves (General), CA-Q-S-005, and Selection of Calibration Points, CA-T-P-002

13 METHOD PERFORMANCE

13.1 Each laboratory must have initial demonstration of performance data on file for each analyte of interest as described in Section 9.0.

13.2 Training Qualification

13.2.1 The Group/Team Leader has the responsibility to ensure this procedure is performed by an associate who has been properly trained in its use and has the required experience.

14 POLLUTION PREVENTION

14.1 It is TestAmerica's policy to evaluate each method and look for opportunities to minimize waste generated (i.e., examine recycling options, ordering chemicals based on quantity needed, preparation of reagents based on anticipated usage, and reagent stability). Employees must abide by the policies in Section 13 of the Corporate Environmental Health and Safety Manual (CW-E-M-001) for "Waste Management and Pollution Prevention".

15 WASTE MANAGEMENT

15.1 All waste must be disposed of in accordance with Federal, State and Local regulations. Where reasonably feasible, technological changes have been implemented to minimize the potential for pollution of the environment. Employees must abide by this method and the policies in Section 13 of the Corporate Environmental Health and Safety Manual (CW-E-M-001) for "Waste Management and Pollution Prevention".

15.2 Laboratory personnel assigned to perform hazardous waste disposal procedures must have a working knowledge of the established procedures and practices of TestAmerica. They must have training on the hazardous waste disposal practices upon initial assignment to these tasks followed by an annual refresher training.

15.3 Waste Streams Produced by the Method

15.3.1 **Acid waste-aqueous waste generated by the analysis.** Samples are disposed of in the acid waste drum located in the Metals lab. The contents of the drum are neutralized and released to the POTW.

16 REFERENCES

16.1 References

16.1.1 Test Methods for Evaluating Solid Waste, Physical/Chemical Methods, SW846, 3rd Edition, Final Update II, Revision I, September 1994, Method 7470A (Mercury)

16.1.2 "Methods for the Chemical Analysis of Water and Wastes", Rev. 3.0 (1994)

16.1.3 TestAmerica North Canton Quality Assurance Manual (QAM), current version

16.1.4 TestAmerica Corporate Environmental health and Safety Manual, CW-E-M-001, and TestAmerica North Canton Facility Addendum and Contingency Plan, current version

16.1.5 Revision History

Historical File:		Revision 1.1: 04/19/97		Revision 2.6: 07/10/07
(formerly CORP-MT-0005NC)		Revision 2.2: 02/05/01		Revision 0:
		Revision 2.3: 05/15/01		
		Revision 2.4: 10/28/02		
		Revision 2.5: 01/08/04		

16.2 Associated SOPs and Policies, current version

16.2.1. QA Policy, QA-003

16.2.2. Glassware Washing, NC-QA-014

16.2.3. Statistical Evaluation of Data and Development of Control Charts, NC-QA-018

16.2.4. Method Detection Limits and Instrument Detection Limits, NC-QA-021 and CA-Q-S-006

16.2.5. Supplemental Practices for DoD Project Work, NC-QA-016

16.2.6. Standards and Reagents, Sop NC-QA-017

16.2.7. Calibration Curves (General), CA-Q-S-005

16.2.8. Section of Calibration Points, CA-T-P-002

17 MISCELLANEOUS (TABLES, APPENDICES, ETC.)

17.1 Modifications/Interpretations from reference method.

17.1.1 Modifications from both 7470A and 245.1

17.1.1.1 The 200 series methods and Chapter 1 of SW846 specify the use of reagent water with a purity equivalent to ASTM Type II water. This

SOP specifies the use of a Millipore DI system or equivalent to produce reagent water. This SOP requires that reagent water must be free of the analytes of interest as demonstrated through the analysis of method blanks.

17.1.1.2 This SOP allows for the use of reduced sample volumes to decrease waste generation. Reagent levels are adjusted to maintain the same ratios as stated in the source methods. According to a letter from Robert Booth of EPA EMSL-Cinn to David Payne of EPA Region V, "Reduction in sample size and appropriate corresponding reduction in sample volume is not considered a significant change in the methodology."

17.1.2 Modifications from Method 7470A

17.1.2.1 Chapter 1 of SW-846 states that the method blank should not contain any analyte of interest at or above the MDL. This SOP states that the method blank must not contain any analyte of interest at or above the reporting limit if the samples associated with the method blank are equal to or above the reporting limit.

17.1.3 Modifications from 245.1

17.1.3.1 Method 245.1 states that standards are not heated. TestAmerica North Canton prepares heated standards for this method.

APPENDIX A

TABLES

Company Confidential & Proprietary

TABLE I . MERCURY REPORTING LIMITS, CALIBRATION STANDARD, QC STANDARD AND SPIKING LEVELS (MG/L)

Standard Aqueous RL	0.0002
TCLP RL	0.002
Std 0	0
Std 1/CRA	0.0002
Std 2	0.0005
Std 3	0.001
Std 4	0.005
Std 5	0.010
ICV	0.0025
LCS/CCV	0.005
Aqueous MS	0.001
TCLP MS	0.005

Company Confidential & Proprietary

TABLE II. SUMMARY OF QUALITY CONTROL REQUIREMENTS

QC Parameter	Frequency	Acceptance Criteria	Corrective Action
ICV	Beginning of every analytical run.	90-110 % recovery.	Terminate analysis; Correct the problem; Recalibrate or reprep with calibration curve. (See Section 10.1).
ICB	Beginning of every analytical run, immediately following the ICV.	The result must be within ± RL from zero if the samples are at or above the reporting limit	Terminate analysis; Correct the problem; Recalibrate or reprep with calibration curve. (See Section 10.1).
CRA	Beginning of every analytical run following the ICB and prior to sample analyses at or near the end of a run required only when requested	50-150% recovery	Rerun to verify; or correct problem and recalibrate or reprep with the calibration curve (See Sec. 10.3)
CCV	Every 10 samples and at the end of the run.	Recovery for Method 245.1 = 95-105% following a calibration. All other CCV for 245.1 are 80-120%. Recovery for Method 7470A = 80-120% following a calibration. If the CCV is biased high and the samples are < RL the results are acceptable.	Terminate analysis; Correct the problem; Recalibrate and rerun all samples not bracketed by acceptable CCV or reprep with calibration curve. (See Section 10.2).
CCB	Immediately following each CCV.	The result must be within ± RL from zero. If the CCB is biased high and the samples are < RL, the results are acceptable.	Terminate analysis; Correct the problem; Recalibrate and rerun all samples not bracketed by acceptable CCB or reprep with calibration curve. (See Section 10.2).
Method Blank	One per sample preparation batch of up to 20 samples.	The result must be less than or equal to the RL. Sample results greater than 20x the blank concentration are acceptable. Samples for which the contaminant is < RL do not require re-digestion (See Section 9.4).	Re-digest and re-analyze samples. Note exceptions under criteria section. See Section 9.4 for additional requirements.

Company Confidential & Proprietary

TABLE II. Summary of Quality Control Requirements (Cont'd)

QC Parameter	Frequency	Acceptance Criteria	Corrective Action
Laboratory Control Sample (LCS)	One per sample preparation batch of up to 20 samples.	Aqueous LCS must be within 80 - 120% recovery or in-house control limits. For Method 245.1, the LCS must be 85-115%.	Terminate analysis; Correct the problem; re-digest and re-analyze all samples associated with the LCS (see Section 9.5).
Matrix Spike	One per sample preparation batch of up to 20 samples.	75 - 125 % recovery or in-house control limits. If the MS/MSD is out for an analyte, it must be in control in the LCS.	In the absence of client specific requirements, flag the data; no flag required if the sample level is > 4x the spike added. (see Section 9.7)
Matrix Spike Duplicate	See Matrix Spike	75 - 125 % recovery or in-house control limits; RPD ≤ 20%. (See MS)	See Corrective Action for Matrix Spike.

Appendix B

CONTAMINATION CONTROL GUIDELINES

The following procedures are strongly recommended to prevent contamination:

All glassware must be washed with detergent and tap water and rinsed with 1:1 nitric acid followed by deionized water.

Proper laboratory housekeeping is essential in the reduction of contamination in the metals laboratory. All work areas must be kept scrupulously clean.

Powdered gloves must not be used in the metals laboratory since the powder contains zinc, as well as other metallic analytes.

Glassware must be periodically checked for cracks and etches and discarded if found. Etched glassware can cause cross contamination of any metallic analytes.

The following are helpful hints in the identification of the source of contaminants:

Reagents or standards can contain contaminants or be contaminated with the improper use of a pipette.

Improper cleaning of glassware can cause contamination.

Separate glassware if an unusually high sample is analyzed and soak with sulfuric acid prior to routine cleaning.

Company Confidential & Proprietary

Appendix C

PREVENTIVE MAINTENANCE

A maintenance log is used to record when maintenance is performed on instruments. When an instrument problem occurs indicate the date, time and instrument number, then identify the problem and corrective action in the maintenance log.

Appendix D Instrument Set Up

Hg Analysis (Leeman PS200II)

TO SET UP INSTRUMENT FOR ANALYSIS

1. F1 Menu

2. **A**utosampler

   A. **R**ack Entry

   B. **E**dit (ex. Rack 1) - Enter

   C. Cup **I**D - Enter (clears sample #'s)

      E. Press Insert Key and move cursor with arrows to cup ID and begin typing labels.

3. Press F2 Macro key and type in – Hg

   A. Enter folder name - ex. HG10306 - Enter. If folder does not exist, type Y - Enter.

   B. Type in - "Rack 1", "Rack 2" etc. - Enter

   C. Type in: FROM CUP TO CUP

      Ex. = 1 30

   D. Do the same for Position 2 if needed. If not needed, you must press "Enter" three times to begin analysis.

Company Confidential & Proprietary

Title: EXTRACTION OF ORGANIC COMPOUNDS FROM WATERS AND SOILS, BASED ON SW846 3500 SERIES, AND 600 SERIES METHODS

Approvals (Signature/Date):

Technology Specialist	1-2-09 Date	Health & Safety Coordinator	1/02/09 Date
Quality Assurance Manager	1/2/09 Date	Laboratory Director	1/5/09 Date
Technical Director	1/2/09 Date		

This SOP was previously identified as SOP No. NC-OP-032, Rev 0, dated 03/12/08

Copyright Information:
This documentation has been prepared by TestAmerica Analytical Testing Corp. and its affiliates ("TestAmerica"), solely for their own use and the use of their customers in evaluating their qualifications and capabilities in connection with a particular project. The user of this document agrees by its acceptance to return it to TestAmerica upon request and not to reproduce, copy, lend, or otherwise disclose its contents, directly or indirectly, and not to use if for any other purpose other than that for which it was specifically provided. The user also agrees that where consultants or other outside parties are involved in the evaluation process, access to these documents shall not be given to said parties unless those parties also specifically agree to these conditions.

THIS DOCUMENT CONTAINS VALUABLE CONFIDENTIAL AND PROPRIETARY INFORMATION. DISCLOSURE, USE OR REPRODUCTION OF THESE MATERIALS WITHOUT THE WRITTEN AUTHORIZATION OF TESTAMERICA IS STRICTLY PROHIBITED. THIS UNPUBLISHED WORK BY TESTAMERICA IS PROTECTED BY STATE AND FEDERAL LAW OF THE UNITED STATES. IF PUBLICATION OF THIS WORK SHOULD OCCUR THE FOLLOWING NOTICE SHALL APPLY: ©COPYRIGHT 2009 TESTAMERICA ANALYTICAL TESTING CORP. ALL RIGHTS RESERVED.

TABLE OF CONTENTS

Facility Distribution No. _____ **Distributed To:** _____

1. SCOPE AND APPLICATION 3
2. SUMMARY OF METHOD 3
3. DEFINITIONS 4
4. INTERFERENCES 4
5. SAFETY 4
6. EQUIPMENT AND SUPPLIES 6
7. REAGENTS AND STANDARDS 7
8. SAMPLE COLLECTION PRESERVATION AND STORAGE 9
9. QUALITY CONTROL 9
10. CALIBRATION AND STANDARDIZATION 9
11. PROCEDURE 11
12. DATA ANALYSIS AND CALCULATIONS 22
13. METHOD PERFORMANCE 22
14. POLLUTION PREVENTION 23
15. WASTE MANAGEMENT 23
16. REFERENCES 24
17. MISCELLANEOUS 25

List of Tables

Table 1 Liquid / Liquid Extraction Conditions
Table 2 Exchange Solvents and Final Volumes
Table 3 Surrogate Spiking Solutions
Table 4 Matrix Spike and LCS Solutions
Table 5 Surrogate Spike Components
Table 6 Matrix Spike Components

Company Confidential & Proprietary

1. SCOPE AND APPLICATION

1.1 This SOP describes procedures for preparation (extraction) of semivolatile organic analytes in aqueous, TCLP leachate, and soil matrices for analysis by Gas Chromatography (GC) and Gas Chromatography / Mass Spectrometry (GC/MS). The procedures are based on SW846 and 600 series methodology and are applicable for measurements made to comply with the Resource Conservation and Recovery Act (RCRA) and for wastewater testing.

1.1.1. Extraction procedures for the following determinative methods are covered: 8081A, 8082, 8270C, 8015B, 608, and 625

1.1.2. The extraction procedures here may be appropriate for other determinative methods when appropriate spiking mixtures are used.

1.1.3. Other extraction procedures (PFE, SPE, etc.) may be used, but are not currently covered in this SOP.

1.1.4. The applicable LIMS method codes are QJ (8081A), QL (8270C), QH (8082), DM (608), DP (625), KI (8015B).

2. SUMMARY OF METHOD

2.1. Separatory Funnel Extraction

A measured volume of sample, typically 1 liter, is adjusted, if necessary, to a specified pH and serially extracted with methylene chloride using a separatory funnel.

2.2. Continuous Liquid/Liquid Extraction

A measured volume of sample, typically 1 liter, is placed into a continuous liquid/liquid extractor, adjusted if necessary, to a specific pH and extracted with the appropriate solvent for 18-24 hours.

2.3. Sonication Extraction

A measured weight of sample, typically 30 g, is mixed with anhydrous sodium sulfate until free flowing. This is solvent extracted three times using an ultrasonic horn.

2.4. Soxhlet Extraction (Accelerated and Traditional)

A 30 g sample is mixed with anhydrous sodium sulfate until free flowing. This is extracted with refluxing solvent.

2.5. Concentration

Procedures are presented for drying and concentration of the extract to final volume for analysis.

Company Confidential & Proprietary

3. DEFINITIONS

3.1. Definitions of terms used in this SOP may be found in the glossary of the TestAmerica North Canton Quality Assurance Manual (QAM), current version.

4. INTERFERENCES

4.1. Method interferences may be caused by contaminants in solvents, reagents, glassware, and other processing apparatus. All these materials must be routinely demonstrated to be free from interferences under conditions of the analysis by running laboratory method blanks as described in the Quality Control section. Specific selection of reagents may be required to avoid introduction of contaminants.

4.2. Visual interferences or anomalies (such as foaming, emulsions, odor, etc.) must be documented.

5. SAFETY

5.1. Employees must abide by the policies and procedures in the Corporate Environmental Health and Safety Manual and this document.

5.2. Eye protection that protects against splash, laboratory coat and appropriate gloves must be worn while samples, standards, solvents and reagents are being handled. Cut-resistant gloves must be worn doing any other task that presents a strong possibility of getting cut. Disposable gloves that have become contaminated must be removed and discarded, other gloves must be cleaned immediately.

5.3. The following analytes have been tentatively classified as known or suspected, human or mammalian carcinogens: benzo(a)anthracene, benzidine, 3,3'dichlorobenzindine, benzo(a)pyrene, alpha-BHC, beta-BHC, gamma-BHC, delta-BHC, dibenz(a,h)anthracene, N-nitrosodimethylamine, 4,4'-DDT, and polychlorinated biphenyl compounds. Primary standards of these toxic compounds must be prepared in the hood.

5.4. The following is a list of the materials used in this method, which have a serious or significant hazard rating. NOTE: This list does not include all materials used in the method. The table contains a summary of the primary hazards listed in the MSDS for each of the materials listed in the table. A complete list of materials used in the method can be found in the Reagents and Standards section. Employees must review the information in the MSDS for each material before using it for the first time or when there are major changes to the MSDS.

Company Confidential & Proprietary

Material (1)	Hazards	Exposure Limit (2)	Signs and symptoms of exposure
Methylene Chloride	Carcinogen Irritant	25 ppm-TWA 125 ppm-STEL	Causes irritation to respiratory tract. Has a strong narcotic effect with symptoms of mental confusion, light-headedness, fatigue, nausea, vomiting and headache. Causes irritation, redness and pain to the skin and eyes. Prolonged contact can cause burns. Liquid degreases the skin. May be absorbed through skin.
Sodium Hydroxide	Corrosive Poison	2 ppm, 5 mg/m^3 2 Mg/M3-Ceiling	This material will cause burns if comes into contact with the skin or eyes. Severe irritant. Effects from inhalation of dust or mist vary from mild irritation to serious damage of the upper respiratory tract, depending on severity of exposure. Symptoms may include sneezing, sore throat or runny nose. Contact with skin can cause irritation or severe burns and scarring with greater exposures. Causes irritation of eyes, and with greater exposures it can cause burns that may result in permanent impairment of vision, even blindness.
Sulfuric Acid (1)	Corrosive Oxidizer Dehydrator Poison Carcinogen	1 mg/m^3	This material will cause burns if comes into contact with the skin or eyes. Inhalation of vapors will cause irritation of the nasal and respiratory system. Symptoms may include irritation of the nose and throat, and labored breathing. Symptoms of redness, pain, and severe burn can occur. Contact can cause blurred vision, redness, pain, and severe tissue burns. Can cause blindness.
Acetone	Flammable	1000 ppm-TWA	Inhalation of vapors irritates the respiratory tract. May cause coughing, dizziness, dullness, and headache.
Hydrochloric Acid	Corrosive Poison	5 ppm-Ceiling	Inhalation of vapors can cause coughing, choking, inflammation of the nose, throat, and upper respiratory tract, and in severe cases, pulmonary edema, circulatory failure, and death. Can cause redness, pain, and severe skin burns. Vapors are irritating and may cause damage to the eyes. Contact may cause severe burns and permanent eye damage.
Acetonitrile	Flammable Poison	40 ppm-TWA	Early symptoms may include nose and throat irritation, flushing of the face, and chest tightness. Prolonged exposure to high levels of vapors may cause formation of cyanide anions in the body.
Hexane	Flammable Irritant	500 ppm-TWA	Inhalation of vapors irritates the respiratory tract. Overexposure may cause lightheadedness, nausea, headache, and blurred vision. Vapors may cause irritation to the skin and eyes.
1 – Always add acid to water to prevent violent reactions.			
2 – Exposure limit refers to the OSHA regulatory exposure limit.			

5.5. Exposure to hazardous chemicals must be maintained **as low as reasonably achievable.** All samples with stickers that read "Caution/Use Hood!" **must** be opened in the hood. Contact the EH&S Coordinator if this is not possible. Solvent and waste containers must

be kept closed unless transfers are being made.

5.6. The preparation of standards and reagents and glassware cleaning procedures that involve solvents such as methylene chloride must be conducted in a fume hood with the sash closed as far as the operations will permit. If more than 500 mL of methylene chloride is spilled, evacuate the area until the area has been cleaned by EH&S.

5.7. All work must be stopped in the event of a known or potential compromise to the health and safety of a TestAmerica North Canton associate. The situation must be reported **immediately** to the EH&S Coordinator and the Laboratory Supervisor.

5.8. During Kuderna-Danish (KD) concentration, do not allow the extract to boil to dryness. The solvent vapors remaining in the KD apparatus may superheat and create an explosion or fire hazard. The KD apparatus and glass separatory funnels have ground glass joints which can become stuck. Technicians must use Kevlar or other cut/puncture-resistant gloves when separating stuck joints.

5.9. 3510 Separatory Funnel

5.9.1. The use of separatory funnels to extract aqueous samples with methylene chloride creates excessive pressure very rapidly. Initial venting must be done immediately after the sample container has been sealed and inverted. Periodic venting may be necessary during the extraction. Vent the funnel into the hood away from people and other samples. This is considered a high-risk activity. The use of a face shield over safety glasses or goggles is recommended. Keep the sash on the fume hood as low as reasonably possible.

5.10. 3520 Extraction Continuous Liquid/Liquid

5.10.1. All personnel are to ensure liquid-liquid area is clear of unnecessary items. Heating mantles used with liquid-liquid extractions generate temperatures that could ignite some materials that come in contact with the heating mantles.

5.10.2. Ensure all solvents are away from liquid-liquid extractor. Increased temperatures near solvents can cause the pressure in the containers to increase.

5.10.3. Ensure all boiling flasks have cooled to room temperature before disconnecting liquid-liquid bodies from boiling flasks to prevent any burns.

6. EQUIPMENT AND SUPPLIES

6.1. Glassware must be cleaned per Glassware Washing, SOP NC-QA-014.

6.2. Equipment and supplies for extraction procedures:

EQUIPMENT AND SUPPLIES	Sep Fun.	CLLE	Soni	Sox	Conc

Company Confidential & Proprietary

EQUIPMENT AND SUPPLIES	Sep Fun.	CLLE	Soni	Sox	Conc
Separatory Funnel: 2 L	√				
Separatory Funnel Rack	√				
Balance: >1400 g capacity, accurate ±1 g	√	√	√	√	
pH indicator paper, Ranges: 0-14, 7.5-14, 0-6, and 3.8-5.5	√	√			
Graduated Cylinder: 1 liter. (other sizes may be used as needed)	√	√			√
Erlenmeyer Flask: 125 & 300 mL (other sizes optional)	√	√	√		√
Centrifuge	√				
Methylene Chloride Collection Tank	√	√			
Initial Volume Template	√	√			
Solvent Dispenser Pump or 100 mL Graduated Cylinder	√	√	√	√	√
Continuous Liquid/Liquid Extractor		√			
Round or flat Bottom: 250, 500 mL or 1 L		√		√	
Boiling Chips: Contaminant free, approximately 10/40 mesh (Teflon® PTFE, carbide or equivalent)		√		√	√
Cooling Condensers		√		√	
Heating Mantle: Rheostat controlled		√		√	
Auto-timer for heating mantle		√		√	
Beakers: 250 & 400 mL, graduated	√	√	√		√
450mL wide-mouth glass jars	√		√		√
Balance: >100 g capacity, accurate ±0.1 g	√	√	√	√	√
Soxhlet Extractor				√	
Cellulose and Glass Thimbles				√	
Accelerated Soxhlet Extractor (Soxtherm-trade name)				√	
Sonicator (at least 300 watts)			√		
Sonicator horn, 3/4 inch			√		
Micro-tip sonicator horn			√		
Kuderna-Danish (K-D) Apparatus: 500 mL					√
Concentrator Tube: 10 mL, attached to K-D with clips					√
Snyder Column: Three-ball macro					√
Water Bath: Heated, with concentric ring cover, capable of temperature control (± 5°C) up to 95°C. The bath must be used in a hood or with a solvent recovery system.					√
Vials: Glass, 2 mL, 4 mL, 10 mL, and 40 mL capacity with Teflon®-lined screw-cap					√
Nitrogen Blowdown Apparatus					√
Nitrogen: reagent grade.					√
Culture Tubes: 10 mL, 16 mmx100 mm					√
Syringe: 1 mL	√	√	√	√	
Glass Wool	√	√	√	√	
Glass Funnel: 75 X 75 mm	√	√	√	√	√
Disposable Pipettes, 5 ¾ in, and 9in.	√	√	√	√	√
Aluminum Foil	√	√	√	√	√
Paper Towels	√	√	√	√	√

6. REAGENTS AND STANDARDS

7.1. Reagents for Extraction Procedures

All reagents must be ACS reagent grade or better unless otherwise specified.

REAGENTS	Sep Fun.	CLLE	Soni	Sox	Conc
Sodium hydroxide (NaOH), Pellets: Reagent Grade	√	√			
Sodium hydroxide solution, 10 N: Dissolve 40 g of NaOH in reagent water and dilute to 100 mL.	√	√			
Sulfuric acid (H_2SO_4), Concentrated: Reagent Grade	√	√			
Sulfuric acid (1:1): Carefully add 500 mL of H_2SO_4 to 500 mL of reagent water. Mix well.	√	√			
Hydrochloric Acid (HCl)			√		
Organic free reagent water.	√	√			
Sodium sulfate (Na_2SO_4), Granular, Anhydrous: Purify by heating at 400°C a minimum of two hours.	√	√	√	√	√
Magnesium sulfate			√	√	
Extraction/Exchange Solvents: Methylene chloride, hexane, acetonitrile, acetone, pesticide quality or equivalent	√	√	√	√	√
Acetone, Methylene Chloride: Used for cleaning	√	√	√	√	√

7.2. Standards

7.2.1. Stock Standards

Stock standards are purchased as certified solutions. Semivolatile stock standards are stored at $\leq 6^{o}C$. All stock standards must be protected from light. Stock standard solutions must be replaced after one year (from the time of preparation, if prepared in house, or from the time the ampoule is opened if purchased). Standards must be allowed to come to room temperature before use.

7.2.2. Surrogate Spiking Standards

Prepare or purchase surrogate spiking standards at the concentrations listed in Table 5. Surrogate spiking standards are purchased or prepared as dilutions of the stock standards. Surrogate spiking solutions must be refrigerated and protected from light. The standards must be replaced at least every six months or sooner if there is reason to believe that the standard has degraded or concentrated.

7.2.3. Matrix Spiking and Laboratory Control Spiking Standards

The same spiking solution is used for the matrix spike and the Laboratory Control Sample. Prepare MS/LCS spiking standards at the concentrations listed in Table 6. Spiking standards are purchased or prepared as dilutions of the stock standards.

Spiking solutions must be refrigerated and protected from light. The standards must be replaced at least every six months or sooner if there is reason to believe that the standard has degraded or concentrated.

Company Confidential & Proprietary

7.2.4 See SOP NC-QA-017 for additional information on Standards and Reagents.

8. SAMPLE COLLECTION PRESERVATION AND STORAGE

8.1. Samples are not chemically preserved.

8.2. Samples are stored at 4°C ± 2°C in glass containers with Teflon®-lined caps.

8.3. Holding Times

8.3.1 The holding time for aqueous samples is seven days from sampling to extraction. The holding time for solid and waste samples is 14 days from sampling to extraction.

8.3.2 For TCLP leachates, the holding time is 14 days from sampling to the leach process. The extraction holding time seven days from when the TCLP Leach tumbling has been completed, excluding the filtration step, to the extraction step.. If the filtration step requires extended times, this time counts as part of the seven-day holding time.

8.3.3. Analysis of the extracts is completed within 40 days of extraction.

9. QUALITY CONTROL

9.1. Quality Control Batch

9.1.1. The batch is a set of up to 20 samples that are of the same matrix and are processed together using the same procedures and reagents. The batch must contain a method blank, an LCS, and a matrix spike / matrix spike duplicate. (In some cases, at client request, it may be appropriate to process a matrix spike and sample duplicate in place of the MS / MSD). If clients specify specific samples for MS/MSD, the batch may contain multiple MS/MSD. See Policy QA-003 for further definition of the batch.

9.2. Insufficient Sample

9.2.1. If insufficient sample is available to process a MS/MSD, then a second LCS must be processed. The LCS pair is then evaluated according to the LCS/LCSD criteria. Use of an LCS pair in place of an MS/MSD must be documented.

9.3. Sample Count

9.3.1. Laboratory-generated QC samples (method blanks, LCS, MS/MSD) are not included in the sample count. Field samples are included.

9.4. Method Blank

9.4.1. A method blank consisting of all reagents added to the samples must be prepared and analyzed with each batch of samples. Surrogates are spiked into the method blank at the same level as the samples. See Table 3 for the appropriate amount of surrogate to use for each analytical method. The method blank is used to identify any background interference or contamination of the analytical system which may lead to the reporting of elevated concentration levels or false positive data.

9.4.2. Aqueous Method Blanks use 1000 mL of reagent water spiked with the surrogates. The method blank goes through the entire analytical procedure.

9.4.3. Solid method blanks use approximately 30 g of sodium sulfate spiked with the surrogates. See Table 3 for the appropriate amount of surrogate to use for each analytical method. The method blank goes through the entire analytical procedure.

9.4.4. TCLP method blanks use 250 mL of leachate fluid spiked with the surrogates. SPLP method blanks use 1000 mL of leachate fluid spiked with the surrogates The leachate may optionally be diluted to 1000 mL with reagent water. The method blank goes through the entire analytical procedure.

9.5. Laboratory Control Sample (LCS)

9.5.1. Laboratory Control Samples are well-characterized laboratory-generated samples used to monitor the laboratory day-to-day performance of routine analytical methods. The LCS, spiked with a group of target compounds representative of the method analytes, is used to monitor the accuracy of the analytical process, independent of matrix effects. Ongoing monitoring of the LCS results provides evidence that the laboratory is performing the method within accepted QC guidelines for accuracy and precision. The LCS goes through the entire analytical procedure.

9.5.2. The LCS is made up in the same way as the method blank (see sections 9.4.1 through 9.4.4), but spiked with the LCS standard and the surrogates. See Tables 3 and 4 for the appropriate amount of spike to use for each analytical method.

9.6. Surrogates

9.6.1. Surrogates are organic compounds which are similar to the target analyte(s) in chemical composition and behavior in the analytical process, but which are not normally found in environmental samples.

9.6.2. Each applicable sample, blank, LCS, and MS/MSD is spiked with surrogate standards. Surrogate spike recoveries must be evaluated by determining whether the concentration (measured as percent recovery) falls within the required recovery limits. See Table 3 for the appropriate amount of surrogate spike to use for each analytical method.

Company Confidential & Proprietary

9.7. Matrix Spike/Matrix Spike Duplicate (MS/MSD)

9.7.1. A matrix spike is an environmental sample to which known concentrations of target analytes have been added. A matrix spike duplicate is a second spiked aliquot of the same sample, which is prepared and analyzed along with the sample and matrix spike. See Tables 3 and 4 for the appropriate amount of spike to use for each analytical method.

9.8. Initial Demonstration of Capability

9.8.1. The initial demonstration and method detection limit studies described in Section 13 must be acceptable before analysis of samples may begin.

9.9 Control Limits

9.9.1 Control limits are established by the laboratory as described in SOP NC-QA-018.

9.9.2 Laboratory control limits are internally generated and updated periodically unless method specified. Control limits are easily accessible via the LIMs (QC Browser program).

9.10 Method Detection Limits (MDLs) and MDL Checks

9.10.1 MDLs and MDL Checks are established by the laboratory as described in SOPs CA-Q-S-006 and NC-QA-021.

9.10.2 MDLs are easily accessible via the LIMs (QC Browser program).

9.11 Nonconformance and Corrective Action

9.11.1 Any deviations from QC procedures must be documented as a nonconformance, with applicable cause and corrective action approved by the facility QA Manager.

10. CALIBRATION AND STANDARDIZATION

10.1. On a weekly basis, measure the appropriate volume of solvent into the appropriate size glass vial using a gastight syringe that is manufactured to a certified volume delivery tolerance of ± 0.01 mL. The “standard” glass vial is sealed, and the meniscus is marked by etching a line on the bottle. The glass vials containing the sample extracts are then compared against the “standard” glass vial to ensure the final volume is consistently 1.0 ± 0.01 mL. A log is kept of the glass vial lot number and preparation date.

11. PROCEDURE

Procedures for separatory funnel liquid/liquid extraction (Section 11.2), continuous liquid/liquid

extraction (Section 11.3), sonication extraction (Section 11.4), medium-level sonication (Section 11.5), soxhlet extraction (Section 11.6), accelerated soxhlet (Section 11.7), waste dilution (Section 11.8), extract concentration (Section 11.9), and nitrogen evaporation to final concentration (Section 11.10). Refer to SOP NC-QA-016 for information on DoD samples.

11.1. Procedural Variations

Procedural variations are allowed only if deemed necessary in the professional judgment of the supervisor to accommodate variation in sample matrix, chemistry, sample size, or other parameters. Any variation in procedure must be completely documented using a Nonconformance memo and approved by a supervisor and QA/QC Manager. The Nonconformance memo will be filed in the project file. Procedural variations are not allowed for Ohio VAP projects.

11.2. Separatory Funnel Liquid/Liquid Extraction of Water Samples

11.2.1. Remove surrogate and matrix spiking solutions from refrigerator and allow to return to room temperature.

11.2.2. Measure the initial sample pH by inserting a disposable pipette into the sample, and placing a drop of sample on the wide-range pH paper. Record on the extraction benchsheet.

11.2.3. Measure the initial volume using the volume template. Place the template next to the sample bottle and read the volume marking from the template. Record this volume on the benchsheet. The normal sample volume is 1 liter. Other sample volumes may be used to obtain specific reporting limits, and reduced sample volumes, diluted to 1 liter with reagent water, may be used for very dirty samples.

11.2.4. Prepare a method blank, LCS and/or LCSD, and MS/MSD for each batch as specified in Section 9 of this SOP. Use 1 L of reagent water for method blanks and LCS and/or LCSD. Use 500 mL of sample for the MS/MSD. The LCS and/or LCSD and MS/MSD are spiked with the surrogate and matrix spike solutions, the method blank only with the surrogates. See Tables 3 and 4 for the appropriate amount of spike solution to use for each analytical method.

11.2.5. Use 250 mL of leachate for TCLP pesticides and TCLP semivolatiles measured in a beaker. Use 1000 mL of leachate for SPLP semivolatiles and SPLP pesticides.

11.2.6. For a TCLP method blank, LCS and LCS Dup measure 250 mL of the buffer solution used in the leaching procedure and transfer to the separatory funnel. Add 60 mL of methylene chloride to the separatory funnel. The TCLP leachate may be diluted to approximately 1 liter before extraction if needed due to matrix. For an SPLP method blank, LCS, and LCS Dup, measure 1000 mL of the buffer solution using the volume template and transfer to the separatory funnel.

Company Confidential & Proprietary

11.2.7. Pour the sample into a separatory funnel. Add 60 mL of methylene chloride per sample. Place a labeled collection jar under each appropriate separatory funnel. Place a small amount of glass wool into a funnel and fill with anhydrous sodium sulfate. Place a funnel containing sodium sulfate on each collection jar. Spike the samples with surrogate and/or spike solutions.

11.2.8. Adjust sample pH as indicated in Table 1 for the initial extraction. Use the minimum amount of 1:1 H_2SO_4 or 10 N NaOH, as necessary. Recheck the sample by inserting a disposable pipette into the sample, and placing a drop of sample onto the pH paper. Record adjusted pH, spiking volumes, and standard numbers on the benchsheet. Return spiking solutions to the refrigerator as soon as possible.

11.2.9. Seal and shake or rotate the separatory funnel vigorously for two minutes with periodic venting to release excess pressure. An autoshaker may be used to shake and rotate the separatory funnel.

Warning: Dichloromethane creates excessive pressure very rapidly! Therefore, initial venting must be done immediately after the separatory funnel has been sealed and inverted. Vent into hood away from analysts and other samples.

11.2.10. Allow the organic layer to separate from the water phase until complete visible separation has been achieved. If the emulsion interface between layers is more than one-third the size of the solvent layer, the analyst must employ mechanical techniques to complete the phase separation. The optimum technique depends upon the sample and may include stirring, filtration of the emulsion through glass wool, centrifugation, or other physical methods. If the emulsion cannot be broken (recovery of <80% of the methylene chloride*), transfer the sample, solvent, and emulsion into the extraction chamber of a continuous extractor and proceed as described in continuous liquid-liquid extraction (Section 11.3.). If this is done, the sample must be extracted as part of a valid CLLE batch.

***Note**: 15 - 20 mL of methylene chloride is expected to dissolve in 1 L of water. Thus, solvent recovery could be as low as 35 mL from the first shake and still be acceptable. Subsequent shakes must recover at least 50 mL of solvent.

11.2.11. Drain the solvent extract from the separatory funnel through the prepared filtration funnel into a clean glass container. The extract may be drained directly into the KD flask. Close the stopcock just before the water level begins draining out of the separatory funnel. If the sodium sulfate becomes saturated with water, replace the existing sodium sulfate with fresh drying agent.

11.2.12. Repeat the extraction process two more times using fresh 60 mL portions of solvent, combining the three solvent extracts in the collection container.

11.2.13. If extraction at a secondary pH is required, replace the filtration funnel and

Company Confidential & Proprietary

adjust the pH of the sample in the separatory funnel to the pH indicated in Table 1 with a minimum amount of 10 N NaOH or 1:1 H_2SO_4. Measure by inserting a disposable pipette into the sample, and placing a drop of sample onto the pH paper. Record the adjusted pH on the benchsheet. Serially extract with three 60 mL portions of methylene chloride, as outlined in Steps 11.2.7 to 11.2.10. Collect these three extracts in the same container used for the previous fraction.

11.2.14. Rinse the extract residue from the sodium sulfate by pouring 20-30 mL of clean methylene chloride through the funnel and into the collection container.

11.2.15. Dispose of solvent and water remaining in the extractor into the appropriate waste container.

11.2.16. Cover with aluminum foil if the extract is not concentrated immediately. Refer to Section 11.9 for concentration.

11.3. Continuous Liquid/Liquid Extraction from Water Samples

11.3.1. Remove surrogate and matrix spiking solutions from refrigerator and allow to return to room temperature.

11.3.2. Assemble the apparatus. Add approximately 250 mL of methylene chloride to the extractor body. Add three to five boiling chips to the round-bottom distilling flask. Label the flask with an extraction ID label.

11.3.3. Measure the initial sample pH with wide-range pH by inserting a disposable pipette into the sample, and placing a drop of sample onto the wide range pH paper. Record on the extraction benchsheet.

11.3.4. Measure the initial volume using the volume template. Place the template next to the sample bottle and read the volume marking from the template. Record this volume on the benchsheet. Prepare a method blank, LCS, and MS/MSD for each batch as specified in Section 9 of this SOP. See Tables 3 and 4 for the appropriate amount of spike to use for each analytical method. Use 1 L of reagent water for method blanks and LCS.

Use 250mL of leachate for TCLP semivolatiles and TCLP pesticides. Use 1000 mL of leachate for SPLP semivolatiles and SPLP pesticides. Dilute to about 1 liter with reagent water.

For a TCLP method blank, LCS, and LCS Dup, measure 250 mL of the buffer solution in a beaker and transfer to the continuous liquid/liquid extractor. Dilute to about 1 liter with reagent water. For an SPLP method blank, LCS, and LCS Dup, measure 1000 mL of the buffer solution using the volume template and transfer to the continuous liquid/liquid extractor. No dilution with reagent water is required.

Company Confidential & Proprietary

Less than one liter of sample may be used for highly contaminated samples, or if the reporting limit can be achieved with less than one liter of sample. In this event, dilute the sample to about 1 liter with reagent water. This must be documented with a Non-Conformance Memo.

11.3.5. Add reagent water to the extractor body until approximately 150 mL of methylene chloride is pushed over into the round-bottomed flask to ensure proper operation and solvent cycling. Prime the extractor using reagent water. The method blank and samples are spiked with the surrogates, the LCS and matrix spikes with the surrogates, and matrix spiking solutions.

Adjust sample pH as indicated in Table 1 for the initial extraction. Use the minimum amount of 1:1 H_2SO_4 or 10 N NaOH, as necessary. Recheck the sample with pH paper. Record adjusted pH, spiking volumes and standard numbers on the benchsheet. Return spiking solutions to the refrigerator as soon as possible. Attach cold condenser (about 10°C). Turn on heating mantle. Inspect joints for leaks once solvent has begun cycling. Extract for 18-24 hours (24 hours required for 600 series).

If extraction at a secondary pH is required (see Table 1), turn off the heating mantle and allow the extractor to cool. Detach the condenser and adjust the pH of the sample in the extractor body to the pH indicated in Table 1 with a minimum amount of 10 N NaOH or 1:1 H_2SO_4. Measure by inserting a disposable pipette into the sample, and placing a drop of sample on the pH paper. Record the adjusted pH on the benchsheet. Re-attach the condenser, and turn on the heating mantle. Extract for 18-24 hours.

Turn off the heating mantle and allow the extractor to cool.

Cover with aluminum foil if the extract is not concentrated immediately. Refer to Section 11.9 for concentration.

11.4. Sonication

11.4.1. Remove surrogate and matrix spiking solutions from refrigerator and allow to warm to room temperature.

11.4.2. Decant and discard any water layer on a sediment/soil sample, unless there are specific instructions not to decant the water. Record and document if a water layer was discarded on the benchsheet. Homogenize the sample by mixing it thoroughly in the container. If this is not possible, place the sample in clean beaker and homogenize. Upon completion of homogenization in the beaker, return sample to original container. Discard foreign objects such as sticks, leaves and rocks, unless extraction of this material is required by the client. If the sample consists primarily of foreign materials, consult with the client (via the Project Manager or Administrator).

Company Confidential & Proprietary

11.4.3. Weigh 30 g of sample ± 0.2g into a 250 or 400 mL beaker or wide-mouth jar. Record the weight to the nearest 0.01 g in the appropriate column on the benchsheet.

11.4.4. Add appropriate volume of matrix spiking solution to any matrix spike / matrix spike duplicate samples (see Table 4). Add the appropriate volume of the surrogate spiking solution to each sample, method blank, Laboratory Control Sample (LCS), and matrix spikes (see Table 3 for appropriate amounts). Refer to Table 6 for details of the surrogate spiking solutions. Add the appropriate matrix spiking solution to each Matrix Spike/Matrix Spike Duplicate (MS/MSD) and LCS. Refer to Tables 3 and 5 for details of the spiking solutions. Record spiking volumes and standard numbers on the benchsheet. Return spiking solutions promptly to refrigerator.

11.4.5. Mix the weighed and spiked/surrogated sample with a spatula adding enough anhydrous sodium sulfate (approximately 30 g) to be free flowing. (If the sample is not free flowing, extraction efficiency may be reduced)

11.4.6. Prepare a method blank, LCS, and MS/MSD for each batch as specified in Section 9 of this SOP. Use 30 g of sodium sulfate for the method blank and LCS. Use 30 g ± 0.2g each of parent sample for the MS and MSD samples.

11.4.7. Immediately add approximately 100 mL of solvent to the beaker.
Solvents:

Semivolatile GC/MS, TPH, Organochlorine pesticides and PCBs	1:1 v/v Methylene Chloride / Acetone
Semivolatile GC/MS concrete only	Methylene chloride

Note: Steps 11.4.5 through 11.4.9 must be performed rapidly to avoid loss of the more volatile extractables.

11.4.8. Place the bottom surface of the appropriate disrupter horn tip approximately ½ inch below the surface of the solvent, but above the sediment layer.

11.4.9. Sonicate for three minutes, making sure the entire sample is agitated.
Note: Do ***not*** use ***Micro-tip*** probe.

11.4.10. Loosely plug the stem of a 75 mm x 75 mm glass funnel with glass wool. Add 10-20 g of anhydrous sodium sulfate to the funnel cup.

11.4.11. Place the prepared funnel on a labeled collection apparatus (beaker or K-D Apparatus).

11.4.12. Decant and filter extracts through the prepared funnel into the collection apparatus (a clean beaker or K-D Apparatus).

11.4.13. Repeat the extraction two more times with approximately 100 mL portions of

solvent each time. Decant off extraction solvent after each sonication. On the final sonication, pour the entire sample (sediment and solvent) into the funnel and rinse with an additional 10 mL-20 mL of the appropriate solvent (refer to Table in 11.4.7).

Note: Alternatively, the three extracts may be collected together and then filtered through the sodium sulfate.

11.4.14. Cover with aluminum foil if the extract is not concentrated immediately. Refer to Section 11.9 for concentration

11.4.15. Sonicator Tuning: Tune the sonicator according to manufacturer's instructions. The sonicator must be tuned quarterly and if a new horn is installed.

11.5 Medium level sonication

11.5.1. Remove surrogate and matrix spiking solutions from refrigerator and allow to warm to room temperature.

11.5.2 Decant and discard any water layer on a sediment/soil sample, unless there are specific instructions not to decant the water. Record and document if a water layer was discarded on the benchsheet. Homogenize the sample by mixing it thoroughly in the container. If this is not possible, place the sample in clean beaker and homogenize. Upon completion of homogenization in the beaker, return sample to original container. Discard foreign objects such as sticks, leaves and rocks, unless extraction of this material is required by the client. If the sample consists primarily of foreign materials, consult with the client (via the Project Manager or Administrator).

11.5.3 Weigh 5 g of sample ± 0.1g into a 40 mL vial. Record the weight to the nearest 0.01 g in the appropriate column on the benchsheet.

11.5.4 Add appropriate volume of matrix spiking solution to any matrix spike / matrix spike duplicate samples (see Table 4). Add the appropriate volume of the surrogate spiking solution to each sample, method blank, Laboratory Control Sample (LCS), and matrix spikes (see Table 3 for appropriate amounts). Refer to Table 6 for details of the surrogate spiking solutions. Add the appropriate matrix spiking solution to each Matrix Spike/Matrix Spike Duplicate (MS/MSD) and LCS. Refer to Tables 3 and 5 for details of the spiking solutions. Record spiking volumes and standard numbers on the benchsheet. Return spiking solutions promptly to refrigerator.

11.5.5 Mix the weighed and spiked/surrogated sample with a spatula adding enough anhydrous sodium sulfate to be free flowing.

11.5.6 Prepare a method blank, LCS, and MS/MSD for each batch as specified in Section 9 of this SOP. Use 5 g of sodium sulfate for the method blank and LCS.

Use 5 g ± 0.1g each of parent sample for the MS and MSD samples.

11.5.7 Immediately add the appropriate mLs of solvent to the vial.

LCS, MS/MSD	18 mL Hexane
Sample and blank	19 mL Hexane

Note: Steps 11.4.5 - 11.4.9 must be performed rapidly to avoid loss of the more volatile extractables.

11.5.8 Place the bottom surface of the appropriate disrupter horn tip approximately ½ inch below the surface of the solvent, but above the sediment layer.

11.5.9 Sonicate for two minutes continuous disruption, making sure the entire sample is agitated.
Note: Use ***Micro-tip*** probe.

11.5.10 The samples are now ready for analysis.

11.6 Soxhlet

11.6.1 Remove surrogate and matrix spiking solutions from refrigerator and allow to warm to room temperature.

11.6.2 Decant and discard any water layer on a sediment/soil sample unless there are specific instructions not to decant. Record and document if a water layer was discarded on the benchsheet. Homogenize the sample by mixing it thoroughly in the container. If this is not possible, place the sample in a clean beaker and homogenize. Upon completion of homogenization in the beaker, return the sample to original container. Discard foreign objects such as sticks, leaves, and rocks, unless extraction of this material is required by the client. If the sample consists primarily of foreign materials, consult with the client (via the Project Manager).

11.6.3 Place approximately 200mL of solvent into a 250 mL flat bottom flask containing one or two clean boiling chips. Weigh 30g of sample ± 0.2g into a thimble or in a beaker, recording the weight to the nearest 0.01g on the benchsheet.. Sample weights less than 30g, but over 5g, may be used if the appropriate reporting limits can be met.

11.6.4 Prepare a method blank, LCS, and MS/MSD for each batch as specified in Section 9 of this SOP, using sodium sulfate as the matrix for the LCS. The parent sample is used for the MS/MSD. The weight of sodium sulfate used must be approximately the weight of soil used in each sample.

11.6.5 Add the appropriate amount of surrogate and matrix spiking solution as indicated in

Tables 3, 4, 5, and 6.

11.6.6 Add anhydrous sodium sulfate to each sample and mix well. The mixture must have a free-flowing texture. If not, add more sodium sulfate. Add the sample/sodium sulfate mixture to a soxhlet extractor thimble, but do not pack the thimble tightly. The soxhlet extractor or extraction thimble must drain freely for the duration of the extraction period. A glass wool plug below the sample in the soxhlet extractor is an acceptable alternative for the thimble.

11.6.7 Attach the flask to the extractor and extract the sample for 16-24 hours at 4-6 cycles per hour. Check the system for leaks at the ground glass joints after it has warmed up.

Note: If a reduced quantity of sample is extracted, it is usually necessary to increase the amount of sodium sulfate added or increase the solvent boiling rate to properly set the cycling rate.

Solvents:

Semivolatile GC/MS, OPP, PAH, TPH Organochlorine pesticides and PCBs	1:1 v/v Methylene Chloride / Acetone

11.6.8 Allow the extract to cool after the extraction is complete, then disassemble by gently twisting the soxhlet from the flask.

11.6.9 The sample is now ready for the concentration step (Section 11.9).

11.6.10 Cover with aluminum foil if the extract is not concentrated immediately. Refer to Section 11.9 for concentration.

11.7 Accelerated Soxhlet (Soxtherm Trade Name)

11.7.1 Remove surrogate and matrix spiking solutions from refrigerator and allow to return to room temperature.

11.7.2 Decant and discard any water layer on a sediment/soil sample unless there are specific instructions not to decant. Record and document if a water layer was discarded on the benchsheet. Homogenize the sample by mixing it thoroughly in the container. If this is not possible, place the sample in clean beaker and homogenize. Upon completion of homogenization in beaker, return sample to original container. Discard foreign objects such as sticks, leaves and rocks, unless extraction of this material is required by client. If the sample consists primarily of foreign materials, consult with the client (via the Project Manager or Administrator).

11.7.3 Weigh 30g of sample ± 0.2 g into a beaker or wide-mouth jar, recording the weight to the nearest 0.01g on the benchsheet. Add 30g of anhydrous sodium sulfate to each sample, and mix well. The mixture must have a free-flowing texture. If not,

Company Confidential & Proprietary

add more sodium sulfate. Add the sample/sodium sulfate mixture to an accelerated soxhlet thimble, but do not pack the thimble tightly. The extraction thimble must drain freely for the duration of the extraction period. A glass wool plug below the sample in the thimble is required.

11.7.4 Sample weights less than 30g, but over 5g, may be used if the appropriate reporting limits can be met.

11.7.5 Prepare a method blank, LCS, and MS/MSD for each batch as specified in Section 9 of this SOP, using sodium sulfate as the matrix. The weight of sodium sulfate used must be approximately the weight of soil used in each sample.

11.7.6 Add the appropriate amount of surrogate and matrix spiking solution as indicated in Tables 3, 4, 5, and 6.

11.7.7 Place thimble in the extract beaker containing at least six clean boiling chips and add approximately 110 mL of solvent. Place beakers into positions on the accelerated soxhlet unit. Run appropriate program for the extraction solvent. Check the system for leaks at the joints periodically.

Solvents:

Semivolatile MS, PAH, TPH	1:1 v/v Methylene Chloride / Acetone
Semivolatile GC PCB, PEST, OPP	1:1 v/v Hexane/Acetone

11.7.8 Upon completion of the program, remove the extract beaker from the unit, let cool, and dispose of the extracted sample.

11.7.9 Transfer extract into a culture tube, rinsing the extract beaker to complete the quantitative transfer. Rinse the extractor beaker, which contained the solvent extract with 10-15 mL of the appropriate solvent and pour it through the sodium sulfate drying funnel. Rinse the funnel with 10-15 mL of methylene chloride to complete the quantitative transfer.

11.7.10 Place culture tubes on nitrogen evaporation unit and reduce to approximately 1-2 mL. Add appropriate solvent according to the extraction performed to bring the sample to the correct final volume.

11.8 Waste Dilution

11.8.1 Remove surrogate and matrix spiking solutions from refrigerator and allow to return to room temperature.

11.8.2 Label the vial with the sample number. Tare the vial, then transfer approximately 1g of sample to the vial. Record the weight to the nearest ± 0.01g.

11.8.3 For the blank and LCS/LCSD, add a small amount of the appropriate solvent to the

vial. Add appropriate volume of surrogate and spike solutions (Table 3).

11.8.4 Dilute to 10 mL with the appropriate solvent (Methylene Chloride for GC/MS Semi and GCS TPH). Add 10 mL of appropriate solvent (Hexane) for GCS pesticide and/or PCB analysis. Method 8015B waste dilutions are diluted to approximately 10 mL with DCM and are placed on the nitrogen evaporation unit to reduce to a 2 mL final volume.

11.8.5 Cap and shake or vortex each extract.

11.8.6 The sample is now ready for analysis.

11.9 Concentration

According to the type of sample, different solvents and final volumes will be required. Refer to Table 2 for the appropriate final volumes and concentrations.

11.9.1 Kuderna-Danish (KD) Method:

11.9.1.1 Assemble a Kuderna-Danish concentrator by attaching a 10 mL concentrator tube to the 500 mL KD flask. Label the CT and KD. Transfer the sample to the labeled K-D flask, filtering Continuous Liquid/Liquid and Soxhlet samples through funnels filled with sodium sulfate. Rinse the funnel with 20-30 mL of methylene chloride to complete the quantitative transfer.

11.9.1.2 Add one or two clean boiling chips and the extract to be concentrated to the KD flask and attach a three-ball Snyder Column. Add approximately 1 mL of clean methylene chloride to the top of the Snyder column. (This is important to ensure that the balls are not stuck, and the column will work properly). Attach to the KD flask.

11.9.1.3 Place the KD apparatus on a water bath (90-98°C) so the tip of the concentrator tube is submerged. The water level must not reach the joint between the concentrator and the KD flask. At the proper rate of distillation, the balls will actively chatter; but the chambers should not flood.

11.9.1.4 Concentrate to 15-20 mL. If the determinative method requires a solvent exchange, add the appropriate exchange solvent to the top of the Snyder Column, and then continue the water bath concentration back down to 5-8 mL. Refer to Table 2 for details of exchange solvents and final volumes. The Snyder column may be insulated if necessary to maintain the correct rate of distillation.

Note: It is very important not to concentrate to dryness as analytes will be lost.

11.9.1.5 Remove the KD apparatus from the water bath and allow to cool for a minimum of 10 minutes. If the level of the extract is above the level of the concentrator tube joint, continue to distill the solvent as necessary. Again, allow the KD flask to cool for a minimum of 10 minutes.

11.10 Nitrogen Evaporation to Final Concentration

11.10.1 Transfer the CT to the evaporation apparatus.

11.10.2 Place the tube in a warm water bath that is at least 5°C below the boiling temperature of the solvent being evaporated and evaporate the solvent using a gentle stream of nitrogen. The nitrogen flow will form a slight depression on the surface of the solvent, but must not create splattering of the extract.

Boiling points of commonly used solvents are:

Methylene chloride	40°C
Acetone	56°C
Hexane	69°C
Acetonitrile	82°C
Toluene	111°C

Note: It is very important not to concentrate to dryness as analytes will be lost.

Note: The final concentration and volume measurement steps are critical. Use care when concentrating and make certain that the final volume measurement is accurate.

11.11 Analytical Documentation

11.11.1 Record all analytical information in the analytical logbook/logsheet which may be in an electronic format, including the analytical data from standards, blanks, LCSs, MS/MSDs, and any corrective actions or modifications to the method.

11.11.2 All standards are logged into a department standard logbook. All standards are assigned a unique number for identification. Logbooks are reviewed by the supervisor or designee.

11.11.3 Sample information and associated QC are entered into the LIMs after final technical review.

12. DATA ANALYSIS AND CALCULATIONS

Not applicable

13. METHOD PERFORMANCE

13.1. Initial Demonstration

13.1.1. Each laboratory must make an initial demonstration of capability for each individual method. This requires analysis of four QC check samples. The QC check sample is a well-characterized laboratory generated sample used to monitor method performance, which must contain all the analytes of interest.

Company Confidential & Proprietary

The spiking level must be equivalent to a mid-level calibration. (For certain tests, more than one set of QC check samples may be necessary in order to demonstrate capability for the full analyte list.)

13.1.2. Four aliquots of the QC check sample are analyzed using the same procedures used to analyze samples, including sample preparation.

13.1.3. Calculations and acceptance criteria for the QC check samples are given in the determinative SOPs. See SOPs NC-GC-038, NC-MS-018, NC-MS-003, and NC-GC-007 for detailed information on the determinative methods.

13.2. Training Qualification

13.2.1. The Group/Team Leader has the responsibility to ensure this procedure is performed by an analyst who has been properly trained in its use and has the required experience.

13.2.2 Method validation information (where applicable) in the form of laboratory demonstrations of capabilities is maintained for this method in the laboratory QA files

14. POLLUTION PREVENTION

It is TestAmerica's policy to evaluate each method and look for opportunities to minimize waste generated (i.e., examine recycling options, ordering chemicals based on quantity needed, preparation of reagents based on anticipated usage, and reagent stability). Employees must abide by the policies in Section 13 of the Corporate Environmental Health and Safety Manual (CW-E-M-001) for "Waste Management and Pollution Prevention".

15. WASTE MANAGEMENT

15.1. All waste will be disposed of in accordance with Federal, State and Local regulations. Where reasonably feasible, technological changes have been implemented to minimize the potential for pollution of the environment. Employees will abide by this method the policies in Section 13 of the Corporate Environmental Health and Safety Manual (CW-E-M-001) for "Waste Management and Pollution Prevention."

15.2. The following waste streams are produced when this method is carried out.

15.2.1. Extracted aqueous samples contaminated with methylene chloride. This tank is then periodically rolled to the tank room, the pH is verified, the contents are neutralized with sodium bicarbonate, the pH re-verified and the Dichloromethane waste drained into a waste drum located outside the building. The wastewater is discharged to the POTW.

15.2.2. Used sodium sulfate and glass wool or filter paper contaminated with methylene chloride/acetone or acetone/hexane from the extract drying step. These materials are disposed of in the solid waste and debris in a red container

located in the Extractions Lab.

15.2.3. **Assorted flammable solvent waste from various rinses**. These wastes are put into the halogenated/non-halogenated 25 gallon solvent waste container located under the fume hood in extractions.

15.2.4. **Methylene chloride waste from various rinses:** These wastes are disposed of in the liquid-liquid separation unit.

15.2.5. **Hexane- Hexane waste:** These samples are to be disposed in the flammable waste.

15.2.6. **Waste Hexane in vials.** These vials are placed in the vial waste located in the GC prep laboratory.

15.2.7. **Waste Methylene Chloride sample vials**. These vials are placed in the vial waste located in the GC prep laboratory.

15.2.8. **Extracted solid samples contaminated with methylene chloride/acetone or acetone/hexane.** These materials are disposed of in the solid waste and debris in a red container located in the Extractions Lab.

15.2.9. Samples, standards, and all extraction materials contaminated with high levels (>50ppm) of PCBs must be segregated into their own waste stream. PCB wastes are collected in one of three waste streams, solid PCB, liquid PCB, and PCB vial waste.

15.2.10. Solvent Recovery System Waste. Methylene Chloride waste from the Solvent Recovery System is collected and disposed of in the liquid-liquid separation unit. Acetone/Methylene Chloride waste from this system is disposed of in the flammable waste containers located in the laboratory.

16. REFERENCES

16.1. References

16.1.1. Test Methods for Evaluating Solid Waste, Physical/Chemical Methods, SW846, 3rd Edition, Final Update III (December 1996). Sections 3500B, 3510C, 3520C, 3540C, and 3550B,

16.1.2. TestAmerica North Canton Quality Assurance Manual (QAM), current version

16.1.3. TestAmerica Corporate Environmental Health and Safety Manual, CW-E-M-001, and TestAmerica North Canton Facility Addendum and Contingency Plan, current version

16.1.4. Revision History

Historical File:		Revision 3.4: 10/16/98		Revision 4.0: 02/04/03
(formerly CORP-OP-0001NC		Revision 3.5: 04/22/99		Revision 4.1: 10/07/03
		Revision 3.6: 05/13/99		Revision 4.2: 01/30/06
		Revision 3.7: 03/20/01		Revision 0: 03/12/08 (NC-OP-032)
		Revision 3.8: 05/23/01		
		Revision 3.9: 04/22/02		

16.2. Associated SOPs and Policies, current version

16.2.1. QA Policy, QA-003

16.2.2. Glassware Washing, NC-QA-014

16.2.3. Statistical Evaluation of Data and Development of Control Charts, NC-QA-018

16.2.4. Method Detection Limits and Instrument Detection Limits, NC-QA-021 and CA-Q-S-006.

16.2.5. Supplemental Practices for DoD Project Work SOP, NC-QA-016

16.2.6. Gas Chromatographic Analysis based on Method 8000B, 8021B, 8081A, 8082, 8151A, 8015B, and 615, NC-GC-038

16.2.7. GC/MS Analysis based on Method 8270C, NC-MS-018

16.2.8. Analysis of Pesticides and PCBs by EPA Method 608, NC-GC-0007

16.2.9. GC/MS Semivolatile Organic Compounds Capillary Column Technique Based on EPA Method 625, NC-MS-003

16.2.10. Standards and Reagents, NC-QA-017

17. MISCELLANEOUS

17.1. Modifications from Reference method

17.1.1. Some surrogate spiking concentrations are modified from those recommended in SW-846, in order to make the concentrations more consistent with the calibration levels in the determinative methods.

17.1.2. Spiking levels for method 608 have been reduced by a factor of ten to bring the

levels within the normal calibration range of the instrument.

17.2. Tables

TABLE 1 Liquid /Liquid Extraction Conditions		
Determinative Method	**Initial Ext. pH**	**Secondary Ext. pH**
BNA: 8270C[1]	1-2 (acid first) or 11-12 (base first)	11-12 (base first) or 1-2 (acid first)
625	11-12 (base first) or 1-2 (acid first)	1-2 (acid first) or 11-12 (base first)
Pest/PCB: 8081A, 8082 and 608	5-9	None
Hydrocarbons: 8015B	As received	None

[1] If the laboratory has validated acid only 8270 extraction for the target compound list required then the base extraction step may be omitted. The required validation consists of a four-replicate initial demonstration of capability and a method detection limit study (see Section 13). Additionally, either of the base or acid fractions of Method 8270 can be run first.

TABLE 2
Final Volumes and Exchange Solvents

Type	Exchange Solvent for Analysis	Final Volume for Analysis in mL
Semivolatiles	N/A	2.0 mL
PCB	Approximately 18 mL Hexane – water Approximately 36 mL Hexane - solid	10.0 for solids 5.0 for H2O 2.0 for H2O*
Pesticides	Approximately 18 mL Hexane	10.0 for solids 5.0 for H2O
Pesticides/TCLP	Approximately 18 mL Hexane	3.0 mL
BNA – SIM	N/A	2.0 mL - Solids & H2O
TPH	N/A	1.0

* Michigan work requires a final volume of 2 mL.

Note: Different final volumes may be necessary to meet special client reporting limit requirements.

TABLE 3

Surrogate Spiking Solutions

Analyte Group	Surrogate Spike Solution ID	Volume (mL)
BNA	100/150 ppm BNA	0.2
BNA / SIM	100/150 ppm BNA	0.2 / 0.02
BNA Waste Dilution	100/150 ppm BNA	0.5
PEST	0.2 ppm DCB/TCX	1.0
TPH	40ng Nonane (C9)	1.0
PCB	0.2 ppm DCB/TCX	1.0

TABLE 4
Matrix Spike and LCS Solutions

Analyte Group	Matrix Spike Solution ID	Volume (mL)
BNA	100 ppm BNA All-Analyte Spike and Restek Spike	0.2
	Waste Dilution	0.5
BNA / SIM	100 ppm BNA All-Analyte Spike and Restek Spike	0.2 / 0.02
PEST	Pest NPDES Spike	1.0
PEST TCLP	Pest TCLP Spike	1.0
PCB	10 ppm PCB Spike	1.0
TPH	See Spike List – Table 6	1.0

Company Confidential & Proprietary

TABLE 5
Surrogate Spike Components

Analyte Group	Compounds	Conc. (µg/mL)
BNA	2-Fluorobiphenyl	100
	Nitrobenzene-d5	100
	p-Terphenyl-d14	100
	2-Fluorophenol	150
	Phenol-d6	150
	2,4,6-Tribromophenol	150
	1,2-Dichlorobenzene-d4	100
	2-Chlorophenol-d4	150
PEST	Decachlorobiphenyl	0.2
PCB	Tetrachloro-m-xylene	0.2
TPH	Nonane (C9)	40.0

TABLE 6
Matrix Spike Components

Type	Compounds	Conc. (µg/mL)
BNA	Acenaphthene	100
	4-Chloro-3-Methylphenol	150
	2-Chlorophenol	150
	1,4-Dichlorobenzene	100
	2,4-Dinitrotoluene	100
	4-Nitrophenol	150
	N-Nitroso-Di-n-Propylamine	100
	Pentachlorophenol	150
	Phenol	150
	Pyrene	100

Company Confidential & Proprietary

Type	Compounds	Conc. (µg/mL)
BNA	1,2,4-Trichlorobenzene	100
	1,4-Dichlorobenzene	100
	2,4-Dinitrotoluene	100
	Hexachlorobenzene	100
	Hexachlorobutadiene	100
	Hexachloroethane	100
	2-Methylphenol	100
	3-Methylphenol	100
	4-Methylphenol	100
	Nitrobenzene	100
	Pentachlorophenol	100
	Pyridine	100
	2,4,5-Trichlorophenol	100
	2,4,6-Trichlorophenol	100
	Acenaphthene	100
	Acenaphthylene	100
	Anthracene	100
	Benzo(a)anthracene	100
	Benzo(b)fluoranthene	100
	Benzo(k)fluoranthene	100
	Benzo(a)pyrene	100
	Benzo(ghi)perylene	100
	Benzyl butyl phthalate	100
	Bis(2-chloroethyl)ether	100
	Bis(2-chloroethoxy)methane	100
	Bis(2-ethylhexyl)phthalate	100
	Bis(2-chloroisopropyl)ether	100
	4-Bromophenyl phenyl ether	100
BNA	2-Chloronaphthalene	100

Company Confidential & Proprietary

Type	Compounds	Conc. (µg/mL)
	4-Chlorophenyl phenyl ether	100
	Chrysene	100
	Dibenzo(a,h)anthracene	100
	Di-n-butylphthalate	100
	1,3-Dichlorobenzene	100
	1,2-Dichlorobenzene	100
	1,4-Dichlorobenzene	100
	3,3'-Dichlorobenzidine	100
	Diethyl phthalate	100
	Dimethyl phthalate	100
	2,4-Dinitrotoluene	100
	2,6-Dinitrotoluene	100
	Di-n-octylphthalate	100
	Fluoranthene	100
	Fluorene	100
	Hexachlorobenzene	100
	Hexachlorobutadiene	100
	Hexachloroethane	100
	Indeno(1,2,3-cd)pyrene	100
	Isophorone	100
	Naphthalene	100
	Nitrobenzene	100
	N-Nitrosodi-n-propylamine	100
	Phenanthrene	100
	Pyrene	100
	1,2,4-Trichlorobenzene	100
	4-Chloro-3-methylphenol	100
BNA	2-Chlorophenol	100
	2,4-Dichlorophenol	100

Type	Compounds	Conc. (µg/mL)
	2,4-Dimethylphenol	100
	2,4-Dinitrophenol	100
	2-Methyl-4,6-dinitrophenol	100
	2-Nitrophenol	100
	4-Nitrophenol	100
	Pentachlorophenol	100
	Phenol	100
	2,4,6-Trichlorophenol	100
	Acetophenone	100
	Atrazine	100
	Caprolactum	100
	Benzaldehyde	100
	1,1′-Biphenyl	100
	Safrole	100
	1,4-Dioxane	100
	Pronamide	100
	p-Chlorobenzilate	100
	Phenacetin	100
	Ethyl methanesulfonate	100
	2-Picoline	100
	Phorate	100
	Quinoline	100

Company Confidential & Proprietary

Type	Compounds	Conc. (µg/mL)
Pest TCLP	Heptachlor	0.5
	Heptachlor epoxide	0.5
	Lindane	0.5
	Endrin	0.5
	Methoxychlor	1.0
Pest NPDES/Pest	Alrin	1.0
	Alpha-BHC	1.0
	beta-BHC	1.0
	delta-BHC	1.0
	gamma-BHC (Lindane)	1.0
	4,4'-DDD	1.0
	4,4'-DDE	1.0
	4,4'-DDT	1.0
	Dieldrin	1.0
	alpha-Endosulfan	1.0
	beta-Endosulfan	1.0
	Endosulfan Sulfate	1.0
	Endrin	1.0
	Heptachlor	1.0
	Heptachlor Epoxide	1.0

Diesel Range Organics (8015B) Spike	
Compound	**Final Concentration**
n-decane	50 µg/ml
n-dodecane	50 µg/ml
n-tetradecane	50 µg/ml
n-hexadecane	50 µg/ml
n-octadecane	50 µg/ml
n-eicosane	50 µg/ml
n-docosane	50 µg/ml
n-tetracosane	50 µg/ml
n-hexacosane	50 µg/ml
n-octacosane	50 µg/ml

Company Confidential & Proprietary

Title: TOXICITY CHARACTERISTIC LEACHING PROCEDURE AND SYNTHETIC PRECIPITATION LEACHING PROCEDURE

[SW846 Method 1311]

Approvals (Signature/Date):

Technology Specialist	3-18-08 Date	Health & Safety Coordinator	3/18/08 Date
Quality Assurance Manager	3/19/08 Date	Laboratory Director	3/20/08 Date
Technical Director	3/19/08 Date		

This SOP was previously identified as SOP CORP-IP-0004NC, Rev 1.2, dated 11/11/04

Copyright Information:
This documentation has been prepared by TestAmerica Analytical Testing Corp. and its affiliates ("TestAmerica"), solely for their own use and the use of their customers in evaluating their qualifications and capabilities in connection with a particular project. The user of this document agrees by its acceptance to return it to TestAmerica upon request and not to reproduce, copy, lend, or otherwise disclose its contents, directly or indirectly, and not to use if for any other purpose other than that for which it was specifically provided. The user also agrees that where consultants or other outside parties are involved in the evaluation process, access to these documents shall not be given to said parties unless those parties also specifically agree to these conditions.

THIS DOCUMENT CONTAINS VALUABLE CONFIDENTIAL AND PROPRIETARY INFORMATION. DISCLOSURE, USE OR REPRODUCTION OF THESE MATERIALS WITHOUT THE WRITTEN AUTHORIZATION OF TESTAMERICA IS STRICTLY PROHIBITED. THIS UNPUBLISHED WORK BY TESTAMERICA IS PROTECTED BY STATE AND FEDERAL LAW OF THE UNITED STATES. IF PUBLICATION OF THIS WORK SHOULD OCCUR, THE FOLLOWING NOTICE SHALL APPLY: ©COPYRIGHT 2007 TESTAMERICA ANALYTICAL TESTING CORP. ALL RIGHTS RESERVED.

Facility Distribution No. _____ **Distributed To:**_____

TABLE OF CONTENTS

1. SCOPE AND APPLICATION *3*
2. SUMMARY OF METHOD *4*
3. DEFINITIONS *5*
4. INTERFERENCES *5*
5. SAFETY *6*
6. EQUIPMENT AND SUPPLIES *9*
7. REAGENTS AND STANDARDS *10*
8. SAMPLE COLLECTION, PRESERVATION AND STORAGE *11*
9. QUALITY CONTROL *13*
10. CALIBRATION AND STANDARDIZATION *14*
11. PROCEDURE *14*
12. DATA ANALYSIS AND CALCULATIONS *27*
13. METHOD PERFORMANCE *29*
14. POLLUTION PREVENTION *29*
15. WASTE MANAGEMENT *29*
16. REFERENCES *30*
17. MISCELLANEOUS (METHOD INTERPRETATIONS, RECORD MANAGEMENT, ETC.) 32

LIST OF APPENDICES

APPENDIX A - TABLE ***33***
APPENDIX B - FIGURES ***35***
APPENDIX C - LOGBOOK SHEETS ***39***
APPENDIX D - FLOW CHARTS ***44***

Company Confidential & Proprietary

1. SCOPE AND APPLICATION

1.1. This SOP describes the application of the Toxicity Characteristic Leaching Procedure (TCLP), SW846 Method 1311. The Toxicity Characteristic (TC) of a waste material is established by determining the levels of 8 metals and 31 organic chemicals in the aqueous leachate of a waste. The TC is one of four criteria in 40 CFR Part 261 to determine whether a solid waste is classified as a hazardous waste. The other three are corrosivity, reactivity, and ignitability. The TC Rule utilizes the TCLP method to generate the leachate under controlled conditions that were designed to simulate leaching through a landfill. EPA's "worst case" waste disposal model assumes mismanaged wastes will be exposed to leaching by the acidic fluids generated in municipal landfills. The EPA's model also assumes the acid/base characteristics of the waste will be dominated by the landfill fluids. The TCLP procedure directs the testing laboratory to use a more acidic leaching fluid if the sample is an alkaline waste, again in keeping with the model's assumption that the acid fluids will dominate leaching chemistry over time.

1.2. The specific list of TC analytes and regulatory limits may be found in Appendix A.

Note: The list in Appendix A does not include the December 1994 EPA rule for Universal Treatment Standards for Land Disposal Restrictions. Those requirements include 216 specific metallic and organic compounds and, in some cases, lower detection limit requirements (see 40 CFR 268.40). TCLP leachates are part of the new Universal Treatment Standards, but the conventional analytical methods will not necessarily meet the new regulatory limits. Consult with the client and with TestAmerica Technical Specialists before establishing the instrumental methods for these regulations.

1.3. This SOP also describes the application of the Synthetic Precipitation Leaching Procedure (SPLP) which was designed to simulate the leaching that would occur if a waste was disposed in a landfill and exposed only to percolating rain water. The procedure is based on SW846 Method 1312. The list of analytes for SPLP may extend beyond the toxicity characteristic compounds shown in Appendix A. With the exception of the use of a modified extraction fluid, the SPLP and TCLP protocols are essentially equivalent. Where slight differences may exist between the SPLP and TCLP they are distinguished within this SOP.

1.4. The procedure is applicable to liquid, solid, and multiphase wastes.

1.5. The results obtained are highly dependent on the pH of the extracting solution, the length of time that the sample is exposed to the extracting solution, the temperature during extraction, and the particle size/surface area of the sample. These parameters must be carefully controlled.

1.6. The reporting limits are based on the individual samples as well as the individual analysis techniques. However, the sample is determined to be hazardous if it contains any analyte at levels greater than or equal to the regulatory limits.

1.7. If a total analysis of the waste demonstrates that individual analytes are not present in the waste, or they are present but at such low concentrations that the appropriate regulatory levels could not possibly be exceeded, the procedure need not be run. If the total analysis results indicate that TCLP is not required, the decision to cease TCLP analysis should be remanded to the client.

1.8. If an analysis of any one of the liquid fractions of the procedure leachate indicates that a regulated compound is present at such a high concentration that, even after accounting for dilution from the other fractions of the leachate, the concentration would be equal to or above the regulatory level for that compound, then the waste is hazardous and it may not be necessary to analyze the remaining fractions of the leachate. However, the remaining analyses should not be terminated without the approval of the client.

1.9. Volatile organic analysis of the leachate obtained using a bottle extraction, normally used for extractable organics and metals, can be used to demonstrate that a waste is hazardous, but only the ZHE option can be used to demonstrate that the concentration of volatile organic compounds is below regulatory limits due to potential analyte loss into the headspace during the bottle extraction.

2. SUMMARY OF METHOD

2.1. For liquid wastes that contain less than 0.5% dry solid material, the waste, after filtration through 0.6 to 0.8 µm glass fiber filter, is defined as the TCLP leachate.

2.2. For wastes containing greater than or equal to 0.5% solids, the liquid, if any, is separated from the solids and stored for later analysis or recombination with the leachate. The particle size of the remaining solid phase is reduced, if necessary. The solid phase is extracted with an amount of extraction fluid equal to 20 times the weight of the solid phase. For TCLP, the extraction fluid employed for extraction of non-volatile analytes is a function of the alkalinity of the solid phase of the waste. For SPLP, the extraction fluid employed is a function of the region of the country where the sample site is located if the sample is a soil. If the sample is a waste or wastewater the extraction fluid employed is a pH 4.2 solution. Two leachates may be generated: a) one for analysis of non-volatile constituents (semi-volatile organics, pesticides, herbicides and metals, and/or, b) one from a Zero Headspace Extractor (ZHE) for analysis of volatile organic constituents. Following extraction, the liquid leachate is separated from the solid phase by filtration through a 0.6 to 0.8 µm fiber filter.

Company Confidential & Proprietary

2.3. If compatible (i.e., multiple phases will not form on combination), the initial liquid filtrate of the waste is added to the liquid leachate and these are prepared and analyzed together. If incompatible, the liquids are analyzed separately and the results are mathematically combined to yield a volume-weighted average concentration.

3. DEFINITIONS

3.1. "Leachate" is used to refer to the solutions generated from these procedures (TCLP, SPLP, deionized water leach).

3.2. "Wet Solids" is that fraction of a waste sample from which no liquid may be forced out by pressure filtration.

4. INTERFERENCES

4.1. Oily wastes may present unusual filtration and drying problems. If requested by the client and as recommended by EPA (see Figure 3), oily wastes can be assumed to be 100% liquid and analysis for total concentrations of contaminants will be performed. This applies specifically to samples containing viscous non-aqueous liquids that would be difficult to filter. Alternately, the oil may be subjected to pressure filtration. The portion that passes through the filter will be prepared and analyzed separately as an organic waste. The "wet solid" portion that remains behind on the filter will be subjected to leaching--prepared and analyzed. The results will then be mathematically combined.

4.2. Wastes containing free organic liquids (e.g., oil, paint thinner, fuel) usually require dilution prior to analysis to address the matrix interferences. In most instances this results in reporting limits elevated above the TCLP regulatory limits.

4.3. Solvents, reagents, glassware and other sample processing hardware may yield artifacts and/or interferences to sample analysis. All these materials must be demonstrated to be free from interferences under the conditions of the analysis by analyzing method blanks as described in Section 9 and the individual determinative SOPs.

4.4. Glassware and equipment contamination may result in analyte degradation. Soap residue on glassware and equipment may contribute to this. All glassware and equipment should be rinsed very carefully to avoid this problem.

4.5. Phthalates may be eliminated by proper glassware cleanup and by avoiding plastics. Only glass, Teflon or Type 316 stainless steel tumblers may be used for leachates to be analyzed for organics. Plastic tumblers may be used for leachates to be analyzed for the metals.

4.6. Overexposure of the sample to the environment will result in the loss of volatile components.

Company Confidential & Proprietary

4.7. Potential interferences that may be encountered during analysis are discussed in the individual analytical methods.

5. SAFETY

5.1. Employees must abide by the policies and procedures in the Corporate Safety Manual and this document.

5.2. Gas pressurized equipment is employed in this procedure. Be sure all valves and gauges are operating properly and that none of the equipment, especially tubing, is over-pressurized. CAUTION: Do not open equipment that has been pressurized until it has returned to ambient pressure.

5.3. The following is a list of the materials used in this method, which have a serious or significant hazard rating. **NOTE: This list does not include all materials used in the method. The table contains a summary of the primary hazards listed in the MSDS for each of the materials listed in the table.** A complete list of materials used in the method can be found in the reagents and materials section. Employees must review the information in the MSDS for each material before using it for the first time or when there are major changes to the MSDS.

Material (1)	**Hazards**	**Exposure Limit (2)**	**Signs and symptoms of exposure**
Acetic Acid	Corrosive Poison Flammable	10 ppm-TWA	Contact with concentrated solution may cause serious damage to the skin and eyes. Inhalation of concentrated vapors may cause serious damage to the lining of the nose, throat, and lungs. Breathing difficulties may occur.
Glacial Acetic Acid	Corrosive Poison Flammable	10 ppm-TWA	Contact with concentrated solution may cause serious damage to the skin and eyes. Inhalation of concentrated vapors may cause serious damage to the lining of the nose, throat, and lungs. Breathing difficulties may occur.
Methanol	Flammable Poison Irritant	200 ppm-TWA	A slight irritant to the mucous membranes. Toxic effects exerted upon nervous system, particularly the optic nerve. Symptoms of overexposure may include headache, drowsiness and dizziness. Methyl alcohol is a defatting agent and may cause skin to become dry and cracked. Skin absorption can occur; symptoms may parallel inhalation exposure. Irritant to the eyes.

Sulfuric Acid	Corrosive Oxidizer Dehydrator Poison Carcinogen	1 mg/m^3-TWA	Inhalation produces damaging effects on the mucous membranes and upper respiratory tract. Symptoms may include irritation of the nose and throat, and labored breathing. Symptoms of redness, pain, and severe burn can occur. Contact can cause blurred vision, redness, pain and severe tissue burns. Can cause blindness.
Hydrochloric Acid	Corrosive Poison	5 ppm-Ceiling	Inhalation of vapors can cause coughing, choking, inflammation of the nose, throat, and upper respiratory tract, and in severe cases, pulmonary edema, circulatory failure, and death. Can cause redness, pain, and severe skin burns. Vapors are irritating and may cause damage to the eyes. Contact may cause severe burns and permanent eye damage.
Nitric Acid	Corrosive Oxidizer Poison	2 ppm-TWA 4 ppm-STEL	Nitric acid is extremely hazardous; it is corrosive, reactive, an oxidizer, and a poison. Inhalation of vapors can cause breathing difficulties and lead to pneumonia and pulmonary edema, which may be fatal. Other symptoms may include coughing, choking, and irritation of the nose, throat, and respiratory tract. Can cause redness, pain, and severe skin burns. Concentrated solutions cause deep ulcers and stain skin a yellow or yellow-brown color. Vapors are irritating and may cause damage to the eyes. Contact may cause severe burns and permanent eye damage.
Methylene Chloride	Carcinogen Irritant	25 ppm-TWA 125 ppm-STEL	Causes irritation to respiratory tract. Has a strong narcotic effect with symptoms of mental confusion, light-headedness, fatigue, nausea, vomiting and headache. Causes irritation, redness and pain to the skin and eyes. Prolonged contact can cause burns. Liquid degreases the skin. May be absorbed through skin.
Sodium Hydroxide	Corrosive	2 mg/m^3-Ceiling	Severe irritant. Effects from inhalation of dust or mist vary from mild irritation to serious damage of the upper respiratory tract, depending on severity of exposure. Symptoms may include sneezing, sore throat or runny nose. Contact with skin can cause irritation or severe burns and scarring with greater exposures. Causes irritation of eyes, and with greater exposures it can cause burns that may result in permanent impairment of vision, even blindness.
1 – Always add acid to water to prevent violent reactions.			
2 – Exposure limit refers to the OSHA regulatory exposure limit.			

5.4. Eye protection that protects against splash, laboratory coat, and appropriate gloves must be worn while samples, standards, solvents, and reagents are being handled. Cut-resistant gloves must be worn doing any other task that presents a strong possibility of getting cut. Disposable gloves that have been contaminated will be removed and discarded; other gloves will be cleaned immediately.

5.5. A rotary agitation apparatus is used in this procedure. Certain samples may break the glass jars used in the procedure. For these samples, extra caution, including plastic or polyethylene overwraps of the glass jar, may be necessary. Turning the jar or bottle sideways rather than tumbling end over end may also reduce the chance of breakage. If sideways tumbling is used, note this change in the logbook comment section. Guards must be placed in front of any rotating equipment.

5.6. Secure tumbler and extraction apparatus before starting rotary agitation apparatus.

5.7. During sample rotation, pressure may build up inside the bottle. Periodic venting of the bottle will relieve pressure.

5.8. Any cyanide containing waste or soil may result in the formation of hydrogen cyanide gas when exposed to acidic conditions. SPLP Fluid #3 reagent water must be used for these samples. **NOTE: Do not use an acidic SPLP fluid due to the potential release of hydrogen cyanide gas.**

5.9. Exposure to hazardous chemicals must be maintained as low as reasonably achievable; therefore, unless they are known to be non-hazardous, all samples must be opened, transferred and prepared in a fume hood, or under other means of mechanical ventilation, where possible. All samples with stickers that read "Caution/Use Hood!" **must** be opened in the hood. Contact the EH&S Coordinator if this is not possible. Solvent and waste containers will be kept closed unless transfers are being made.

5.10. The preparation of standards and reagents and glassware cleaning procedures that involve solvents such as methylene chloride will be conducted in a fume hood with the sash closed as far as the operation will permit.

5.11. All work must be stopped in the event of a known or potential compromise to the health and safety of a TestAmerica associate. The situation must be reported **immediately** to the EH&S Coordinator and Laboratory Supervisor.

5.12. Due to the potential for ignition, flammability or production of noxious fumes, do not attempt to dry non-aqueous liquid samples in an oven. Use extended drying in a ventilation hood.

Company Confidential & Proprietary

6. EQUIPMENT AND SUPPLIES

6.1. Extraction vessels

6.1.1. For volatile analytes - zero-headspace extraction (ZHE) vessel, gas-pressure actuated, Millipore YT3009OHW or equivalent (see Figure 2)

6.1.2. For metals - either borosilicate glass jars (2.5 L, with Teflon lid inserts) or 2.5 L HDPE (Nalgene or equivalent) bottles may be used

6.1.3. For non-volatile organics - only borosilicate glass may be used

6.2. Vacuum filtration apparatus and stainless steel pressure filtration apparatus (142 mm diameter), capable of 0 - 50 psi

6.3. Borosilicate glass fiber filters, 0.6 - 0.8 µm (Whatman GF/F 14.2 cm, 9.0 cm, 4.7 cm, 0.7 µm or equivalent). When analyzing for metals, wash the filters with 1 N nitric acid and de-ionized water prior to use, or purchase pre-washed filters. Glass fiber filters are fragile and should be handled with care.

6.4. Rotary agitation apparatus, multiple-vessel, Associated Design and Manufacturing Company 3740-6 or equivalent (see Figure 1). The apparatus must be capable of rotating the extraction vessel in an end-over-end fashion at 30 ± 2 rpm.

6.5. ZHE Extract Collection Device: Gas-tight syringes, 50 or 100 mL capacity, Hamilton 0158330 or equivalent

6.6. Top loading balance, capable of 0 - 4000 ± 0.01g (all measurements are to be within ± 0.1 grams)

6.7. pH meter and probe capable of reading to the nearest 0.01 unit, and with automatic temperature compensation

6.8. Magnetic stirrer/hotplate and stirring bars

6.9. VOA vials, 40 mL, with caps and septa

6.10. Glass bottles, 1 liter, with Teflon lid-inserts

6.11. Nalgene plastic bottles or equivalent, 1 liter

6.12. Miscellaneous laboratory glassware and equipment

7. REAGENTS AND STANDARDS

7.1. Reagent water for non-volatile constituents must be produced by a Millipore DI system or equivalent. For volatile constituents, water must be passed through an activated carbon filter bed (Milli-Q or tap water passed through activated carbon). Reagent water must be free of the analytes of interest as demonstrated through the analysis of method blanks.

7.2. Hydrochloric acid, 1 N: Carefully add 83 mL concentrated reagent grade HCl to 800 mL reagent water, cool and dilute to 1 liter with reagent water. Cap and shake to mix well.

7.3. Sodium hydroxide, 1 N: Carefully add 40 g reagent grade NaOH pellets to 800 mL reagent water, stir until the pellets are completely dissolved, cool and dilute to 1 liter with reagent water.

CAUTION: Heat is generated during this process.

7.4. Acetic acid, glacial: concentrated, reagent grade liquid (HOAc)

7.6. pH calibration solutions: buffered to a pH of 4, 7, and 10. Commercially available.

7.5. TCLP Leaching Fluids

7.5.1. General Comments

7.5.1.1. The pH of both solutions listed below should be monitored daily and the pH probes are to be calibrated prior to use.

7.5.1.2. The leaching fluids MUST be prepared correctly. If the desired pH range is not achieved and maintained, the TCLP may yield erroneous results due to improper leaching. If the pH is not within the specifications, the fluid must be discarded and fresh extraction fluid prepared.

7.5.1.3. Additional volumes of extraction fluids listed below may be prepared by multiplying the amounts of acetic acid and NaOH by the number of liters of extraction fluid required.

7.5.1.4. At the end of the day, all remaining buffer solutions must be properly discarded.

7.5.2. TCLP Fluid #1: Carefully add 5.7 mL glacial acetic acid and 64.3 mL of 1 N NaOH to 500 mL reagent water in a 1 liter volumetric flask. Dilute to a final volume of 1 L with reagent water, cap and shake to mix well. For 8 L of fluid use

45.6 mL glacial acetic acid and 514 mL 1N NaOH, dilute to 8 L with reagent water. When correctly prepared, the pH of this solution is 4.93 ± 0.05. The density of TCLP fluid #1 is 0.997 g/mL.

7.5.3. TCLP Fluid #2: Carefully add 5.7 mL glacial acetic acid to 500 mL reagent water in a 1 liter volumetric flask. Dilute to a final volume of 1 L with reagent water, cap and shake to mix well. For 8 L of fluid use 45.6 mL glacial acetic acid, dilute to 8 L with reagent water. When correctly prepared, the pH of this solution is 2.88 ± 0.05. The density of TCLP fluid #2 is 0.997 g/mL.

7.6. Nitric acid, 50% solution: Slowly and carefully add 500 mL concentrated HNO_3 to 500 mL reagent water. Cap and shake to mix well.

7.7. Sulfuric acid / nitric acid (60/40 weight percent mixture) H_2SO_4/HNO_3. Cautiously mix 60 g of concentrated sulfuric acid with 40 g of concentrated nitric acid.

7.8. SPLP Leaching fluids

7.8.1. SPLP solutions are unbuffered and exact pH may not be attained. The pH of TCLP and SPLP fluids should be checked prior to use. If not within specifications, the fluid should be discarded and fresh fluid prepared.

7.8.2. SPLP fluid #1: Add 60/40 weight percent mixture of sulfuric and nitric acids to reagent water until the pH is 4.20 ± 0.05 This fluid is used for soils from a site that is east of the Mississippi River and for wastes and waste waters.

7.8.3. SPLP fluid #2: Add 60/40 weight percent mixture of sulfuric and nitric acids to reagent water until the pH is 5.00 ± 0.05. This fluid is used for soils from a site that is west of the Mississippi River.

7.8.4. SPLP fluid #3: This fluid is reagent water and is used for leaching of volatiles. Additionally, any cyanide-containing waste or soil is leached with fluid #3 because leaching of cyanide containing samples under acidic conditions may result in the formation of hydrogen cyanide gas.

7.9. Methanol and methylene chloride - used to aid in cleaning oil contaminated equipment.

8. SAMPLE COLLECTION, PRESERVATION AND STORAGE

8.1. Samples being analyzed for non-volatile organic compounds should be collected and stored in glass containers with Teflon lid liners. Chemical preservatives shall NOT be added UNTIL AFTER leachate generation. Undamaged glass containers should be washed according to SOP NC-QA-0014.

8.2. Samples being analyzed for metals only can be collected in either glass or polyethylene containers.

8.3. When the waste is to be evaluated for volatile analytes, care should be taken to minimize the loss of volatiles. Samples shall be collected and stored in a manner intended to prevent the loss of volatile analytes (e.g., samples should be collected in Teflon lined septum capped vials with minimal headspace and stored at 4 ± 2°C). Samples should be opened only immediately prior to extraction.

8.4. Samples should be refrigerated to 4 ± 2°C unless refrigeration results in irreversible physical changes to the waste. If precipitation occurs, the entire sample (including precipitate) should be extracted.

8.5. The minimum TCLP sample collection size is determined by the physical state or states of the waste and the analytes of concern. The amount of waste required varies with the percent solids. The lower the percent solids, the more waste will be required for preliminary and final testing. For aqueous samples containing between 0.5 and 10% solids, several kilograms of sample are required to complete the analyses. The general minimal requirements when the samples are 100% solids include: 1 - 32 oz jar for semi-volatile organic analysis and metals, and 1 - 4 oz jar for volatile organic analysis. Low density sample materials, such as rags or vegetation, will require larger volumes of sample. For liquid samples (less than 50% solids), minimum requirements are 2 - 32 oz jars for semi-volatile organic analysis and metals, and 2 - 8 oz jars for volatile organic analysis. If volatile organic analysis is the only requested parameter, 2 separate jars are required. If matrix spike or duplicate control samples are requested, additional sample volume is required. If sufficient sample volumes were not received, analyses cannot be started and the client should be notified as soon as possible.

8.6. TCLP leachates should be prepared for analysis and analyzed as soon as possible following extraction. Leachates or portions of leachates for metallic analyte determinations must be acidified with nitric acid to a pH less than 2, unless precipitation occurs. If precipitation occurs upon addition of nitric acid to a small aliquot of the leachate, then the remaining portion of the leachate shall not be acidified and the leachate shall be analyzed as soon as possible. All other leachates should be stored under refrigeration (4 ± 2°C) until analyzed. ZHE leachates must be stored in VOA vials filled to eliminate all headspace.

8.7. Samples are subject to appropriate treatment within the following time periods.

Table 1
Holding Times (days)

Parameter	Collection to Start of TCLP Leach	End of TCLP Tumble to Preparation	Start of TCLP Leach or Semi- volatile Prep Extraction to Analysis	Total Elapsed Time
Volatiles	14	N/A	14	28
Semi-volatiles	14	7	40	61
Mercury	28	N/A	28	56
Other Metals	180	N/A	180	360

NOTE: The initial holding time is measured from date of collection to date TCLP extraction started. (This should be the TCLP extraction date in QuantIms.) Semi-volatile method prep holding time is measured from the day tumbling is complete to the start of method extraction. Subsequent analysis holding times are measured from the date extraction (TCLP or method prep) starts. If sample holding times are exceeded, the values obtained will be considered minimal concentrations. Exceeding holding times is not acceptable in establishing that a waste does not exceed the regulatory level. Exceeding the holding time will not invalidate characterization if the waste exceeds the regulatory limit. The Total Elapsed Time is to be used as guidance. If preps are initiated at the last possible moment of a holding time, the elapsed times may be exceeded.

9. QUALITY CONTROL

9.1. Quality Control Batch (QC Batch) - QA-003 defines a QC Batch as a set of up to 20 field samples of similar matrix that behave similarly and are processed using the same procedures, reagents and standards within the same time period. The same lot of reagents must be used within a batch. A minimum of one TCLP extraction blank (Method Blank), one Laboratory Control Sample (LCS), one Matrix Spike (MS), and one Matrix Spike Duplicate (MSD) will be prepared with each TCLP leachate batch.

9.2. TCLP Extraction Blanks - A minimum of one blank (using the same extraction fluid as used for the samples) must be prepared and analyzed for every batch of samples extracted in a particular vessel type. The blanks are generated in the same way as the samples (i.e., blanks will be tumbled and filtered with the samples). If particle size reduction was performed on any sample in the batch, an equipment blank will be generated by passing blank fluid through the particle reduction apparatus. ZHE Extraction vessels will be uniquely numbered. Consult the TestAmerica QC Program and the individual analysis SOPs for blank acceptance criteria.

9.3. Laboratory Control Sample (LCS) - A LCS is required with each batch of 20 or fewer samples. The LCS shall be generated after a batch of TCLP leachates have been

generated (i.e., at the time of the preparative digestion or extraction) by spiking an aliquot of the appropriate extraction fluid used for that batch or reagent water. Consult the individual analysis SOPs for additional LCS guidance (i.e., spike amounts, spike levels, recovery criteria, etc.).

9.4. Matrix Spike (MS/MSD) - Matrix spikes are used to monitor the performance of the analytical methods on the matrix and to assess the presence of interferences. A MS/MSD pair are required with each batch of 20 or fewer samples.

9.4.1. Matrix spikes are to be added after filtration of the TCLP leachate. Spikes are not to be added prior to the TCLP leaching. For metals, matrix spikes are to be added before preservation with nitric acid.

9.4.2. Consult the individual analysis SOPs for additional guidance on spike compounds and levels.

9.5. Corrective Actions

9.5.1. Consult the TestAmerica QC Program and individual analysis SOPs for corrective action for blanks and LCS

9.5.2. Method of Standard Additions (MSA) shall be used for mercury if all of the following conditions are met:

- Recovery of the analyte in matrix spike is not at least 50%,
- The concentration of the analyte does not exceed the regulatory level, and
- The concentration of the analyte measured in the sample is within 20% of the appropriate regulatory level.

If the matrix spike recovery is 5% or less due to dilution or matrix interference, contact the project manager and client for guidance. The client should also be contacted prior to initiation of any MSA steps. Refer to the individual analysis SOPs for details on how to perform MSA analysis.

10. CALIBRATION AND STANDARDIZATION

10.1. Refer to appropriate analysis SOPs.

11. PROCEDURE

11.1. General Comments

11.1.1. One-time procedural variations are allowed only if deemed necessary in the professional judgment of supervision to accommodate variation in sample matrix, chemistry, sample size, or other parameters. Any variation in procedure shall be completely documented on a Nonconformance Memo kept in the project file and described in the final report. The variation must be approved by a Project Manager, Technical Specialist, and QA Manager. Any unauthorized deviations from this procedure must also be documented as a nonconformance with a cause and corrective action described.

11.1.2. All masses should be recorded to the nearest 0.1 g.

11.2. Preliminary Sample Evaluations (Refer to Flow Chart #1, Appendix D)

11.2.1. Determine the total volume of TCLP leachate (solid phase leachate plus liquid filtrate) that needs to be generated for analysis according to the following:

Table 2
Recommended TCLP Leachate Volume

Analysis	TCLP Required Volume (mL)	SPLP Required Volume (mL)
Volatiles	3 x 40	3 x 40
Semi-volatiles	500	1000
Pesticides	500	1000
Herbicides	500	1000
Metals	300	300

11.2.1.1. For TCLP and SPLP samples used for matrix spike and matrix spike duplicate analysis, two to three times the listed volumes are required.

11.2.2. Sample Description (determine sample matrix)

11.2.2.1. Solid - If the waste will obviously yield no free liquid when subjected to pressure filtration, then proceed to Section 11.2.5 or 11.4 (Bottle Extraction Procedure or ZHE Procedure).

11.2.2.2. Liquid - If the sample is a monophasic liquid, proceed to Section 11.2.3 (Percent Solid Determination).

11.2.2.3. Multiphasic – The sample has discernible layers (liquid/liquid or liquid/solid). If more than one container of multi-phasic materials is received from the field, each container might show different amounts of each phase. Consult client to determine sample selection alternatives (composite all sample containers, select one, resample, etc.) if this occurs.

11.2.3. Solids Determination

11.2.3.1. Determine Type of Filtration Apparatus and Process

11.2.3.1.1. Percent Solids and ZHE Extractions - The ZHE filtration apparatus cannot accurately determine percent solids less than 5%. If an extraction is to be performed solely for volatile organic compounds and the percent solids concentration is apparently greater than 5%, proceed to Section 11.4 (ZHE Extraction Procedure, Volatile Constituents). Otherwise, continue with Section 11.2.3.2. The aliquot of sample used here cannot be used again for the ZHE extraction.

11.2.3.1.2. If the sample is mostly a non-viscous liquid (water or non-viscous organic liquid) of low solids content (expected to be < 0.5%) , vacuum filtration should be used initially. Proceed to determination of percent dry solids (Section 11.2.3.2)

11.2.3.1.3. If the sample is viscous (sludge, oil, or is expected to have solids content > 0.5%), use pressure filtration. Proceed to determination of wet solids (Section 11.2.3.3).

11.2.3.2. Determination of percent dry solids

11.2.3.2.1. Measure and record the weight of the filter. Load the filter into the filter holder and assemble vacuum filter apparatus.

11.2.3.2.2. Homogenize the waste, then transfer 100 g subsample to a glass beaker. Record the sample weight in the percent dry solids section of the logbook.

11.2.3.2.3. Turn on vacuum source. Transfer the sample to the vacuum filtration device attempting to spread the waste sample evenly over the surface of the filter. Be sure to transfer all

particulates from the beaker to the filter. Use a reagent water rinse if necessary.

11.2.3.2.4. Once all liquid has been pulled though the filter, remove the filter with the wet solids from the vacuum filtration apparatus.

11.2.3.2.5. Dry the filter and solid phase at 100 ± 20 ° C for approximately 15 minutes.

11.2.3.2.6. Remove the filter from the oven, and allow to cool in a desiccator.

11.2.3.2.7. Weigh and record the dry weight of filter + particulates.

11.2.3.2.8. Calculate and record the percent dry solids.

11.2.3.2.9. If the percent dry solids is ≥ 0.5%, repeat the drying step. Weigh and record the second filter + particulates dry weight. If the two weighings do not agree within 1%, perform additional drying and weighing until successive weighings agree within 1%.

11.2.3.2.10. If the dry solids result is ≥ 0.5%, proceed to Section 11.2.3.3 using a fresh wet portion of the multiphase waste.

11.2.3.2.11. If the percent solids result is less than 0.5%, discard the solid phase. No leaching will be necessary. Filter sufficient sample with either the pressure filtration system or ZHE system as described in Sections 11.3 and 11.4. The filtrate is the TCLP leachate.

11.2.3.3. Determination of wet solids

11.2.3.3.1. Assemble the pressure filtration apparatus (use blunt forceps to handle the 0.6 to 0.8 µm filter membrane).

11.2.3.3.2. Homogenize the waste, transfer a minimum of a 100 mL subsample to the glass beaker. Measure and record the gross weight (logbook Column A).

11.2.3.3.3. Measure and record the tare weight of the filtrate collection bottle (logbook Column D).

11.2.3.3.4. Transfer the sample to the filtration device attempting to spread the waste sample evenly over the surface of the filter. Measure and record the tare weight of the empty glass beaker and any residual sample (logbook Column B).

11.2.3.3.5. Calculate and record the net weight of sample used for testing (logbook Column C).

11.2.3.3.6. Slowly apply gentle pressure of 10 psi to the filtration apparatus. Allow the sample to filter until no SIGNIFICANT additional liquid has passed through the filter during a two-minute period.

11.2.3.3.7. If necessary, repeat previous step by increasing the pressure in 10 psi increments until a maximum of 50 psi is reached. Stop the filtration when no additional filtrate is generated within a two-minute period.

Note: Some samples will contain liquid material that does not filter (e.g., oil). Do not attempt to filter the sample again by exchanging filters. Viscous oils, or any wastes which do not pass through the filter, are classified by the method as a solid.

11.2.3.3.8. Remove the filtrate collection bottle, weigh and record the gross weight (logbook Column E).

11.2.3.3.9. Calculate and record the net weight of filtrate (logbook Column F). This result will be used in the percent solids calculation.

11.2.3.3.10. To determine the amount of filtrate, place the exact same type and size container as the filtrate container next to the filtrate. Add water to the exact level as the filtrate container to the empty container. Transfer the water to a graduated cylinder and record the volume. This step will reduce the amount of contamination, which may exist from transferring the filtrate to a graduated cylinder.

11.2.3.3.11. Retain the filtrate for possible recombination with the leachate in Section 11.3.7. Retain the filter and wet solids for the leaching in Section 11.3.

Company Confidential & Proprietary

11.2.3.3.12. For multiphase sample preparations, calculate the total weight of wet solids and record the result in logbook Column G.

11.2.4. Particle-size Reduction for Fluid Selection

11.2.4.1. The subsample used for fluid selection must consist of particles less than approximately 1 mm in diameter (versus the less than 1 cm requirement for the material used for the actual extraction). The method requires a smaller particle size to partially compensate for the shorter duration of contact time with the leachate solution as compared to the full extraction. Inappropriate use of coarser materials could result in the selection of the wrong fluid type.

11.2.4.2. Surface area exclusion - size reduction is not required if the sample surface area is greater than or equal to 3.1 cm^2 per gram.

11.2.4.3. If the sample contains particles greater than approximately 1 mm in diameter, crush, cut, or grind the solids to the required size.

11.2.4.4. Consult a supervisor or manager when dealing with unusual sample matrices (e.g., wood, cloth, metal, brick).

11.2.5. Determination of Appropriate Extraction Fluid

11.2.5.1. If the solid content is greater than or equal to 0.5%, and if the sample is being analyzed for metals or nonvolatile organic compounds, the type of leaching solution must be determined.

11.2.5.2. Follow times, temperature, and particle size specified in this section as closely as possible. If reaction time between the acid solution and solid waste is too short or too long, the procedure may produce false pH readings.

11.2.5.3. For SPLP, refer to Section 7.8 for fluid selection. Record the fluid type in the logbook.

11.2.5.4. The TCLP leaching fluid for all volatiles is TCLP Fluid #1.

11.2.5.5. TCLP leach fluid determination for non-volatile analytes

11.2.5.5.1. Calibrate the pH meter with fresh buffer solution in accordance with the pH SOP.

11.2.5.5.2. Weigh out a 5.0 ± 0.1 g subsample (less than 1 mm particle size) of the solid phase into a glass or plastic container, and record in the logbook. Note: If sample quantity is limited, consult supervisor or manager.

Note: Many multiphase samples have limited solids quantity . In these instances, use a 5 g aliquot of the whole sample. Document this difference in the logbook comment section.

11.2.5.5.3. Add 96.5 ± 1.0 mL of reagent water, add magnetic stir bar, cover with a watchglass, and stir for 5 minutes.

11.2.5.5.4. Measure and record the pre-test sample pH in the logbook.

Note: To avoid damaging a glass pH probe when organic liquid is present, use narrow range pH indicator paper or an ISFET pH meter.

11.2.5.5.5. If the pH is less than or equal to 5.0, use TCLP Fluid #1.

11.2.5.5.6. If the fluid pH is greater than 5.0, add 3.5 mL 1 N HCl. Slurry the sample briefly. Insert therm into room temp DI water in one vial in each pre-test sample group to monitor the temperature. All samples in the group must be heated at the same time in order for the temperature of the one monitored sample to represent the others. Heat to 50 ± 2°C and maintain for ten minutes.

Note: The heating cycle is a critical step. If the solid waste does not remain in contact with the acidic solution under specified time and temperature conditions, an erroneous pH may be measured.

11.2.5.5.7. Cool to room temperature.

11.2.5.5.8. Measure and record the pH immediately after the sample has reached room temperature.

11.2.5.5.8.1. If the pH is less than or equal to 5.0, use TCLP Fluid #1. Record the buffer in the logbook.

11.2.5.5.8.2. If the pH is greater than 5.0, use TCLP Fluid #2. Record the buffer in the logbook.

11.2.6. For samples requiring analysis for semi-volatile organics, pesticides, herbicides or metals proceed to Section 11.3.

11.2.7. For samples requiring analysis for volatile organics (ZHE), proceed to Section 11.4.

11.3. Bottle Extraction Procedure: Non-Volatile Constituents: Semi-Volatiles, Pesticides, Herbicides, Metals (Refer to Flow Chart #2, Appendix D)

11.3.1. Evaluate the solid portion of the waste for particle size. If it contains particles greater than 1 cm in size, prepare the solid portion of the waste for leaching by crushing, cutting, or grinding such that all particles are less than 1 cm in size (i.e., capable of passing through a 9.5 mm, 0.375 inch, standard sieve). Size reduction is not required if the sample surface area is greater than or equal to 3.1 cm^2 per gram. If particle size reduction was required, record this in comments column in logbook.

11.3.1.1. Consult your supervisor or manager when dealing with unusual sample matrices (e.g., wood, cloth, metal, brick). Scissors or shears may be used to cut cloth, plastic or sheet metal. Saws may be used for wood or solid metal. Determination of particle size reduction tools should take into account the requested analytes (e.g. avoid chromium steel tools when TCLP metals have been requested). Bricks, rocks, or other solids amenable to grinding may be subcontracted out for particle size reduction (contact PA or PM). Note that size reduction to fine powder is not appropriate, and could invalidate results. If necessary, consult client for guidance.

11.3.2. Determine the minimum total volume of solid phase leachate that needs to be generated. Refer to Section 11.2.1.

11.3.3. Use 100 g of solid unless sample quantity is limited. If limited sample, divide the total volume of solid phase leachate required by 20 to determine the minimum mass of solid phase required for leaching. Round this mass UP to the nearest 5g. Client must be notified if less than 100 g of solid material is used.

Note: Solid phase material is often in limited quantity from multiphase samples. Generally all the *solid* phase material and the filter from Section 11.2.3.3.11 are transferred to the leaching bottle.

11.3.4. All non-ZHE extraction vessels should be uniquely numbered. If breakage occurs, replacement vessels must be numbered with the original vessel identification number prior to use. Breakage must be noted in the logbook comments identifying the affected sample and vessel number.

11.3.5. Weigh the required mass of solid phase into an appropriate extraction vessel (plastic for metals only, glass for all others) and **slowly** add 20 times its mass of appropriate leaching fluid (e.g., 100 g of sample would require 2000 mL of leaching fluid). Record the weight of the sample aliquoted for the extraction. Record the volume of extraction fluid added in the logbook if other than 2000 mL. Record the pH.

11.3.6. Ensure any effervescence has stopped before capping the bottle tightly. Secure in a rotary agitator and rotate end-over-end at 28-32 rpm for 16-20 hours. The temperature of the room should be 23 ± 2°C. Record the rotary agitator I.D. and the date and time extraction is started and completed in the logbook.

Note: As agitation continues, pressure may build up within the bottle for some types of wastes. To relieve excessive pressure, the bottle may be removed and opened periodically in a properly vented hood to relieve any built-up pressure.

11.3.7. After tumbling in the rotary agitator is completed, remove the bottle and allow the solids to settle. Record the date and time the extraction is completed in the logbook. If sample was multiphase with an initial filtrate, drop a few drops of the filtrate (with a disposable glass pipette) into the extraction bottle and observe whether the filtrate is insoluble or forms a precipitate with the leachate. If so then the filtrate is not compatible with the leachate and must be bottled and analyzed separately. The results are normally mathematically recombined (Section 12.1.2). If the filtrate is compatible with the leachate (i.e., completely soluble) then pour the entire filtrate into the leachate bottle, recap and mix. Proceed with the leachate filtration step in the next section.

11.3.8. Filter the sample using pressure filtration by filtering through a new glass fiber filter. For final filtration of the TCLP leachate, the glass fiber filter may be changed, if necessary, to facilitate filtration. Filters must be acid washed if metals are to be determined (see Section 6.3). The entire sample need not be filtered; however, sufficient volume should be generated to support the required analyses.

11.3.9. Measure the pH of the TCLP leachate and record in the logbook. (Use narrow range pH paper or ISFET pH meter to measure the pH of oily samples as a glass pH probe may be damaged.)

11.3.10. Prepare sufficient volume for MS/MSD quality control testing. Refer to the appropriate determinative SOPs for further guidance on the spike components, levels and action criteria.

11.3.11. Immediately preserve the leachate as follows:

Metals	pH < 2 w/ HNO_3 for aqueous filtrates and leachates (do not acidify oils and other non-aqueous liquids)
All others	Refrigerate to 4 ± 2 ^{o}C

Note: Refer to Section 8.6 if precipitation occurs upon preservation.

11.3.12. Label each sample with the appropriate information and submit to the appropriate analytical groups for prep and analysis. For multiphase samples requiring mathematical recombination provide copies of the TCLP preparation logbook sheets to the sample preparation and analysis groups. Most mathematically recombined samples will require data entry for the filtrate and leachate portions as well as for the mathematically recombined results. Contact the Project Manager to ensure the proper sample login is completed.

11.4. ZHE Extraction Procedure: Volatile Constituents (Refer to Flow Chart #3, Appendix D)

11.4.1. Use the ZHE device to obtain a TCLP leachate for analysis of volatile compounds only. Leachate resulting from the use of the ZHE shall NOT be used to evaluate the mobility of non-volatile analytes (e.g., metals, pesticides, herbicides and semi-volatile organics).

11.4.2. Due to some shortcomings of the method, losses of volatile compounds may occur. Extra care should be observed during the ZHE procedure to ensure that such losses are minimized. Charge the ZHE with sample only once and do not open the device until the final extract has been collected. Do not allow the waste, the initial liquid phase, or the extract to be exposed to the atmosphere any longer than necessary.

11.4.3. Install new O-rings and adjust the ZHE piston in the ZHE body to the appropriate height (slightly moisten the O-rings with leaching fluid if necessary).

11.4.4. If the preliminary evaluations indicated the need for particle size reduction, homogenize the waste, weigh out a sufficient size subsample and prepare for leaching by crushing, cutting, or grinding such that all particles are less than 1 cm in size as measured with a ruler (Do NOT sieve the sample). Size

reduction is not required if the sample surface area is greater than or equal to 3.1 cm^2 per gram If particle size reduction was required record this in the comments column of the logbook.

Note: To minimize loss of volatiles, samples for volatiles that require particle size reduction should be kept in sample storage (at 4ºC) until immediately before size reduction. Aggressive reduction which would generate heat should be avoided and exposure of the waste to the atmosphere should be avoided to the extent possible. Size reduction to a fine powder is not appropriate. Also see Section 11.3.1.

11.4.4.1. Consult your supervisor or manager when dealing with unusual sample matrices (e.g., wood, cloth, metal, brick). Scissors or shears may be used to cut cloth, plastic or sheet metal. Saws may be used for wood or solid metal. Bricks, rocks, or other solids amenable to grinding may be subcontracted out for particle size reduction (contact PM).

11.4.5. Homogenize and transfer an appropriate size subsample of the waste into the ZHE and record the mass in the logbook.

11.4.5.1. For wastes that are solid, a 25 g sample is used.

11.4.5.2. For wastes containing < 0.5% solids, the liquid portion of the waste, after filtration, is defined as the TCLP leachate. Filter enough of the sample to support all of the volatile analyses required.

11.4.5.3. If the sample has ≥ 0.5% solids and has non-volatile TCLP/SPLP requested, the appropriate sample size should be estimated based on the wet solids content determined in Section 11.2.3.3. If ZHE only, use visual wet solids estimate to sample subaliquot.

Note: For wastes containing greater than 0.5% wet or dry solids, the "solids" value from the ZHE filtration process may be used to determine the volume of fluid to load into the ZHE. This approach is recommended since the solids value from Section 11.2.3.3 may differ from the ZHE filtration solids due to sample variability or differences in the filtration apparatus.

11.4.6. Carefully place the glass fiber filter between the support screens and secure to the ZHE. Tighten all the fittings.

11.4.7. Place the ZHE in a vertical position; open both the gas AND liquid inlet/outlet valves. Attach a gas line to the gas inlet/outlet valve.

11.4.8. If the waste is solid, slowly increase the pressure to a maximum of 50 psi to force out as much headspace as possible and proceed to Section 11.4.13.

11.4.9. If this is a mutliphase sample, carefully apply gentle pressure of 10 psi (or more, if necessary) to force all headspace slowly out of the ZHE. At the FIRST appearance of liquid from the liquid inlet/outlet valve, quickly close the valve and discontinue gas pressure.

11.4.10. Assemble a syringe and place the plunger in all the way. Attach the pre-weighed syringe to the liquid inlet/outlet valve and open the valve. Record the tare weight of the collection syringe in Column D of the logbook. .

11.4.11. Carefully apply gas pressure of no more than 10 psi to force out the liquid phase. Allow the sample to filter until no SIGNIFICANT additional filtrate has passed in a two-minute period.

Note: If the capacity of the syringe is reached, close the liquid inlet/outlet valve, discontinue gas pressure, remove the syringe, weigh, record weight in Column E and filtrate volume in the logbook. Return to Section 11.4.10.

11.4.12. Repeat previous step increasing the pressure in 10 PSI increments until 50 psi is reached and no significant liquid has passed in a 2 minute period. Close the valve and discontinue gas pressure. Remove the collection device and record the total weight of the collection device with filtrate in column E and filtrate volume in the logbook. Transfer the filtrate to VOA vials and label appropriately. Calculate the weight of filtrate collected and record in Column F in the logbook.

Note: If the original waste contained less than 0.5% solids (Section 11.2.3.2), this filtrate is defined as the TCLP leachate and you may proceed to Section 11.4.22. Otherwise, save the vials by storing at 4°C under minimal headspace conditions, for recombination as in Section 11.4.21.

The material remaining in the ZHE is defined to be the “solid” phase. Calculate the weight of the solid phase and record in Column G of the logbook by subtracting the weight of the filtrate from the weight of the sample.

11.4.13. Determine the amount of buffer to use. Solid samples use 500 mL of leach fluid (20 X 25 g). For multiphase samples use the wet solids (Column G) amount and multiply by 20. Record the leach fluid volume in Column H of the logbook.

Note: The TCLP ZHE prep uses only TCLP fluid #1; the SPLP ZHE prep uses only SPLP fluid #3.

11.4.14. Load the fluid transfer reservoir with an excess of Fluid #1 and preflush the transfer line to eliminate air pockets. Be sure the required volume remains.

11.4.15. Attach the transfer line to the liquid inlet/outlet valve and open the valve. Carefully pump the required volume into the ZHE and close the valve. Disconnect the transfer line.

11.4.16. Check the ZHE to make sure all the valves are closed and manually rotate the ZHE (end-over-end) two or three times. Reposition the ZHE in the vertical position.

11.4.17. Pressurize the ZHE to 5-10 psi. If the ZHE appears to be leaking, follow the corrective action protocols recommended by the manufacturer and repeat the analysis.

11.4.18. Slowly open the liquid inlet/outlet valve to bleed out any headspace that may have been introduced during the introduction of the Fluid. Upon the first sign of liquid from the valve, close the valve.

11.4.19. Repressurize the ZHE to 5-10 psi and place in the rotary agitator. Rotate at 28-32 rpm for 16-20 hours. Room temperature should be 23 ± 2 °C. The room temperature is recorded using a continuous temperature monitor.

11.4.20. Confirm that the pressure of 5-10 psi was maintained throughout the leaching. If it was NOT maintained, return to Section 11.4 and repeat the leachate with a new aliquot of sample.

11.4.21. If there is an initial liquid filtrate (Sec 11.4.12) determine if it is compatible with the leachate if the filtrate has not been previously tested (Sec. 11.3.7).

11.4.21.1. Remove the plunger from the syringe and attach the barrel to the ZHE vessel. Open the outlet valve and pressurize as necessary to transfer about 1 mL of leachate into the syringe. Close the outlet valve.

11.4.21.2. With a glass pipette transfer a few drops of initial filtrate into the open syringe barrel. Formation of separate layers or a precipitate indicates the filtrate and leachate are not compatible. Bottle the filtrate for separate preparation and analysis. The results are normally mathematically recombined.

11.4.21.3. If the filtrate is compatible gently pour the remainder of the filtrate into the syringe barrel. Install the plunger. Bleed any pressure in the

ZHE piston. Open the inlet/outlet valve and depress the syringe plunger to inject the filtrate into the ZHE vessel. Do not inject the air bubble (if present) from the syringe.

11.4.21.4. Close the valve and rotate a few times to mix. Proceed with leachate filtration as described in the next section.

11.4.22. Attach an empty syringe to the outlet valve. Open the valve and pressurize the piston to expel the leachate from the ZHE vessel. Following collection, store the TCLP leachate in 2 or 3 40-mL VOA vials with minimal headspace at 4 ± 2 ^{o}C and prepare for analysis as soon as possible using the appropriate organic analysis procedure (see Section 16.3).

11.4.23. If the individual phases are analyzed separately, combine the results mathematically by using the recombination calculation in Section 12.1.2. Provide copies of the TCLP preparation logbook sheets to the sample preparation and analysis groups. Most mathematically recombined samples will require data entry for the filtrate and leachate portions as well as for the mathematically recombined results. Contact the project manager to ensure the proper sample login is completed.

11.4.24. ZHE Vessel Cleaning

11.4.24.1. Disassemble the vessel.

11.4.24.2. Clean all parts (vessel, lid, bottom, piston, and metal filters) with soapy water.

11.4.24.3. Rinse all parts with tap water followed by D.I. water.

11.4.24.4. Discard all used gaskets.

12. DATA ANALYSIS AND CALCULATIONS

12.1. Calculations

12.1.1. Calculation of weight of extraction fluid to use:

Volume of extraction fluid = 20 X weight of wet solids to be extracted

12.1.2. Mathematical recombination of analytical results:

$$Final\ Analyte\ Concentration = \frac{(V_1 \times C_1) + (V_2 \times C_2)}{V_1 + V_2}$$

Where,

V_1 = total volume of the initial filtrate phase (L).
C_1 = analyte concentration in initial filtrate phase (mg/L).
V_2 = volume of the theoretical solid phase leachate (L).
C_2 = analyte concentration in solid phase leachate (mg/L).,

12.2. Reporting Requirements

12.2.1. Follow these reporting conventions for multi-phase samples.

12.2.1.1. If both phases have positive results, use the values from each phase to calculate the recombined result. Use the reporting limit for each phase to calculate the recombined reporting limit.

12.2.1.2. If both phases are "ND" (not detected) the recombined result is "ND," and the reporting limit is calculated from the reporting limit for each phase.

12.2.1.3. If one phase is "ND" and the other phase has a positive result, use the zero for the "ND" phase and the positive value for the other phase to calculate the combined result. This will produce a minimum known concentration. Alternatively, at client request, the maximum possible concentration can be calculated by using the reporting limit for the "ND" phase rather than zero. The combined reporting limit is based on the reporting limit for both phases

12.2.2. Units - regardless of the nature of the sample, all TCLP and SPLP results are reported in units of mg/L.

12.2.3. For limits and significant figures, consult the appropriate analytical methods (Section 16.3).

12.2.4. Anomalies - all anomalies observed during the leach procedure must be noted on the worksheet or an NCM form. Some examples of such anomalies are:

12.2.4.1. Sample was monolithic - particle size reduction not possible due to nature of matrix.

12.2.4.2. Insufficient sample - less than the required 100 g minimum was available.

12.3. Review Requirements

12.3.1. Review all applicable holding times. If a holding time was exceeded, confirm that a holding time violation was properly documented in an NCM.

12.3.2. If Total analysis results are available, those results may be compared with the TCLP analysis results according to the following:

$$Total \geq 20 \times TCLP$$

Note: Assumes the sample is 100% Solids.

12.3.3. Total constituent analysis results can be used to demonstrate the TCLP protocol is unnecessary. In performing a TCLP analysis, there is a 20:1 dilution of the original sample with the leaching solution. Thus, if the "total constituent" result is less than 20 times the TC level, it is impossible for the leachate to "fail" and the TCLP does not need to be performed. For example, the TC level for lead is 5.0 mg/L (ppm). Therefore, if a sample of lead-contaminated soil contains less than 100 ppm total lead, a TCLP test need not be run to demonstrate that lead is less than the TCLP limit.

13. METHOD PERFORMANCE

13.1. Refer to individual analysis SOPs.

13.2. Training Qualification:

13.2.1. The Group/Team Leader has the responsibility to ensure this procedure is performed by an associate who has been properly trained in its use and has the required experience.

14. POLLUTION PREVENTION

14.1. This method does not contain any specific modifications that serve to minimize or prevent pollution.

15. WASTE MANAGEMENT

15.1. All waste will be disposed of in accordance with Federal, State and Local regulations. Where reasonably feasible, technological changes have been implemented to minimize the

potential for pollution of the environment. Employees will abide by this method and the policies in section 13 of the Corporate Safety Manual for "Waste Management and Pollution Prevention."

15.2. The following waste streams are produced when this method is carried out.

15.2.1. Acidic waste from sample extract. This waste is collected in the laboratory in a designated container identified as "Acid Waste".

15.2.2. Buffer solutions. This waste can be poured down the drain with copious amounts of water.

15.2.3. Solid waste from sample extract, solid sample waste and used filter paper from the sample filtration step. This waste is disposed of in a designated container identified as "Solid Waste."

15.2.4. Flammable solvent waste and remaining TCLP extracts. This waste is disposed of in a flammable liquid solvent container identified as "Mixed Flammable Solvent Waste".

15.2.5. Glassware contaminated with acidic sample residue. Broken or unusable glassware is disposed of in a designated container identified as "Solid Waste." Glassware used in this test method is washed per the Glassware Washing SOP.

16. REFERENCES

16.1. Method 1311, Toxicity Characteristic Leaching Procedure, Revision 0, July 1992, SW-846 Final Update I.

16.2. Method 1312, Synthetic Precipitation Leaching Procedure, Revision 0, November 1994, SW-846 Update II.

16.3. Related Documents

16.3.1. Toxicity Characteristic: Corrections to Final Rule. Method 1311, Federal Register, Vol. 55, No. 126, Friday, June 29, 1990

16.3.2. Toxicity Characteristic: Final Rule. Method 1311, Federal Register, Vol. 55, No. 61, Thursday, March 29, 1990

16.3.3. Technical Background Document and Response to Comments, Method 1311, Toxicity Characteristic Leaching Procedure, USEPA/OSW, April 1989

16.3.4. SOP QA-003, Quality Control Program

16.3.5. SOP CORP-IP-0003NC: Acid Digestion of Aqueous Samples by SW846 and MCAWW 200 Series Methods

16.3.6. SOP NC-MT-012: Inductively Coupled Plasma-Atomic Emission Spectroscopy, Spectrometric Method for Trace Element Analysis, Method 6010B and Method 200.7

16.3.7. SOP CORP-MT-0005NC: Preparation and Analysis of Mercury in Aqueous Samples by Cold Vapor Atomic Absorption, SW-846 7470A and MCAWW 245.1

16.3.8. SOP CORP-MS-0002NC: Determination of Volatile Organics by GC/MS based on Methods 8260B

16.3.9. SOP CORP-MS-0001NC: GC/MS Analysis Based on Method 8270C

16.3.10. SOP NC-GC-038: Gas Chromatographic Analysis Based on Methods 8000B, 8021B, 8081A, 8082, 8151A, and 8015B

16.3.11. NC-OP-0031: Extraction Procedure for Chloriantaed Acid Herbicides based on Method 8151A

16.3.12. SOP NC-OP-032: Extraction and Cleanup of Organic Compounds from Waters and Soils, Based on SW846 3500 Series, 3600 Series, and 600 Series Methods

16.3.13. SOP NC-QA-0017: Standards and Reagents

16.3.14. SOP NC-WC-0010: pH Electrometric Method

16.3.15. SOP NC-QA-0014: Glassware Washing

17. MISCELLANEOUS

17.1. Modifications/Interpretations from Reference Methods

17.1.1. Section 11.2: Preliminary Evaluations. Section 7.1 of the source Method 1311 states that the sample aliquot used for the preliminary evaluation "...may not actually undergo TCLP extraction." Section 7.1.5 of the source method indicates that the portion used for the preliminary evaluation may be used for either the ZHE or non-volatile extraction if the sample was 100% solid. Section 7.1.5 further indicates that if the sample was subjected to filtration (i.e., <

100% solid) that this aliquot may be used for the non-volatile extraction procedure only as long as sufficient sample is available (minimum 100 g). Samples which have been subjected to the oven-drying step may not be used for TCLP extraction because solid phase degradation may result upon heating.

17.1.2. Sections 11.3.7 and 11.4.21: Determination of Filtrate/Extraction Fluid Compatibility. Section 7.2.13 of the source method provides no guidance as to how to make this determination. As a result, the procedure herein was developed.

17.1.3. Section 9.2: TCLP Extraction Blanks. Section 8.1 of the source method states that a minimum of one blank for every 20 extractions "...that have been conducted in an extraction vessel." TestAmerica has interpreted this to mean one blank per twenty samples leached per TYPE of leaching vessel (i.e., Bottle or ZHE) per leach fluid used.

17.1.4. Section 11.2.5.5.8.1: Determination of Appropriate Extraction Fluid. Method 1311 does not address the appropriate approach to take if the pH equals 5.0. This SOP requires that Fluid #1 must be used if the pH is less than or equal to 5.0.

17.1.5. Section 9.4: QA/QC - Matrix Spikes. Section 8.2 of the source method states "A matrix spike shall be performed for each waste type..." and "A minimum of one matrix spike must be analyzed for each analytical batch." Further, Section 8.2.3 of the source method also states "The purpose of the matrix spike is to monitor the performance of the analytical methods used, and to determine whether matrix interferences exist." The standard TestAmerica QAM is designed to address the performance monitoring of analytical methodology through the LCS program. A minimum of one MS and MSD will be prepared for each TCLP leachate batch. The MS/MSD results are used to determine the effect of a matrix on the precision and accuracy of the analytical process. Due to the potential variability of the matrix of each sample, the MS/MSD results have immediate bearing only on the specific sample spiked and not all samples in the batch.

17.1.6. Section 8.2.2 of the source method states that "In most cases, matrix spikes should be added at a concentration equivalent to the corresponding regulatory level." The method also states "If the analyte concentration is less than one half the regulatory level, the spike concentration may be as low as one half of the analyte concentration but may not be less than five times the method detection limit". For several analytes, spiking at the regulatory level is inappropriate to the range of analysis afforded by the determinative methods. Due to the wide range in these levels, TestAmerica spikes at the levels specified in the determinative SOPs.

APPENDIX A

TABLES

Company Confidential & Proprietary

Table 3 - Toxicity Characteristic Analytes and Regulatory Levels (Final Rule)	
Contaminant	**mg/L**
Arsenic	5.0
Barium	100.0
Benzene	0.5
Cadmium	1.0
Carbon tetrachloride	0.5
Chlordane	0.03
Chlorobenzene	100.0
Chloroform	6.0
Chromium	5.0
o-Cresols	200.0
m-Cresols	200.0
p-Cresols	200.0
Total Cresols (used if isomers not resolved)	200.0
2,4-D	10.0
1,4-Dichlorobenzene	7.5
1,2-Dichloroethane	0.5
2,4-Dinitrotoluene	0.13
1,1-Dichloroethylene	0.7
Endrin	0.02
Heptachlor (& epoxide)	0.008
Hexachlorobenzene	0.13
Hexachlorobutadiene	0.5
Hexachloroethane	3.0
Lead	5.0
Lindane	0.4
Mercury	0.2
Methoxychlor	10.0
Methyl ethyl ketone	200.0
Nitrobenzene	2.0
Pentachlorophenol	100.0
Pyridine	5.0
Selenium	1.0
Silver	5.0
Tetrachloroethylene	0.7
Toxaphene	0.5
Trichloroethylene	0.5
2,4,5-Trichlorophenol	400.0
2,4,6-Trichlorophenol	2.0
2,4,5-TP (Silvex)	1.0
Vinyl chloride	0.2

Company Confidential & Proprietary

APPENDIX B

FIGURES

Company Confidential & Proprietary

Figures 1 and 2 - Rotary Agitation Apparatus and Zero Headspace Extraction Vessel (ZHE)

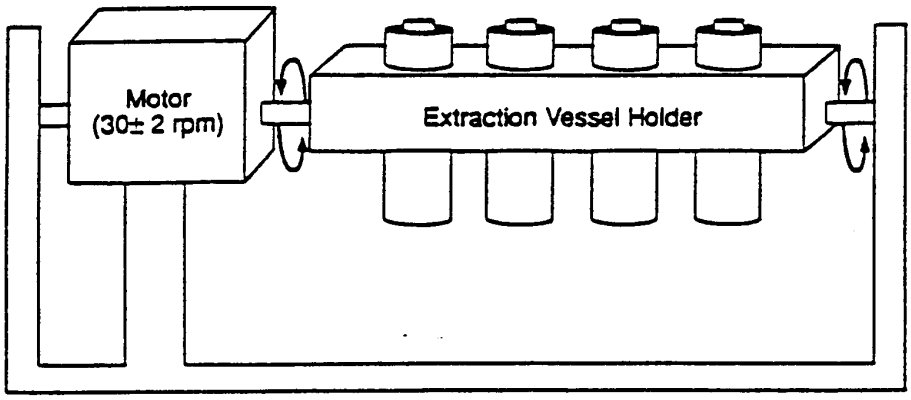

Figure 1. Rotary Agitation Apparatus

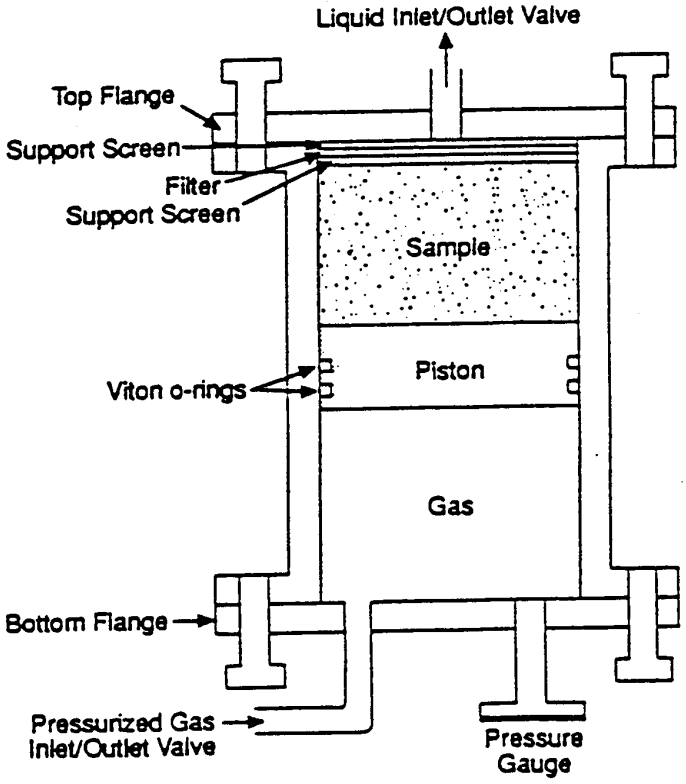

Figure 2 – Cross Section of Zero Headspace Extraction Vessel (ZHE)

Figure 3 - US Environmental Protection Agency Memorandum #35, Page 1

UNITED STATES ENVIRONMENTAL PROTECTION AGENCY
WASHINGTON, D.C. 20460

OFFICE OF
SOLID WASTE AND EMERGENCY RESPONSE

MEMORANDUM # 35

DATE: June 12, 1992

SUBJECT: Notes on RCRA Methods and QA Activities

From: Gail Hansen, Chief Gail Hansen
Methods Section (OS-331)

This memo addresses the following topics:

- o 1992 Symposium on Waste Testing and Quality Assurance
- o SW-846 Update
  - Final Rule for January 23, 1989 Proposed Rule
  - Notice, Proposed Rulemaking for the Second Update to the Third Edition
- o Chlorofluorocarbon 113 (CFC-113) Solvent Replacement Update
- o Environmental Monitoring Methods Index (EMMI)
- o Sampling Work Group Formation
- o MICE Update
- o Oily Waste Analysis
- o Electronic SW-846 Availability.

Printed on Recycled Paper

Company Confidential & Proprietary

Figure 3 - US Environmental Protection Agency Memorandum #35, Page 10 (cont'd)

Oily Waste Analysis

One of the most frequently asked questions on the MICE Service concerns the application of the TCLP, Method 1311, to oily wastes. Many callers request technical guidance on the extraction of oily wastes due to the difficulty in the filtration on these types of waste. In many cases, an oily waste does not filter completely due to premature clogging of the glass fiber filter. This can result in the retention of standing liquid on the glass fiber filter. Material that do not pass through the glass fiber filter at the conclusion of the filtration step is defined by the method as the solid phase of the waste. The solid phase is then subjected to the leaching procedure of the TCLP. For oily wastes, clogging of the glass fiber filter can result in an overestimation of the amount of solid material available for leaching.

To solve this problem, the Agency recommends a conservative approach, one that probably will overestimate the amount of leaching. Rather than performing the TCLP extraction on the unfiltered portion of the oily waste, assume the waste is 100% liquid (e.g., will pass through the glass fiber filter) and perform a totals analysis on the oily waste to determine if the oil exceeds the appropriate regulatory level.

Filterable waste oil generated during the TCLP must be analyzed for a variety of organic and inorganic analytes. The OSW recognizes the difficulty in achieving acceptable performance for the analysis of waste oil using methods currently provided in SW-846. As a result, the Agency will provide several new methods for the preparation and analysis of oil samples to the Organic Methods Workgroup in July. In addition, a microwave assisted digestion procedure should improve the analysis of metals and will be proposed as part of the Second Update of the Third Edition of SW-846. Brief descriptions of these techniques are provided below, for additional information on the organic procedures contact Barry Lesnik at (202) 260-7459. For additional information on microwave digestion contact Ollie Fordham (202) 260-4778.

The use of purge-and-trap (Method 5030) for volatiles in oil generally results in severe contamination of analytical instrumentation. Traps, transfer lines and chromatography columns may become contaminated with oil. This leads to elevated baselines, hydrocarbon background in subsequent analyses, and cross-contamination. Headspace (Method 3810) is currently allowed only as a screening procedure in SW-846. The Agency is evaluating the use of headspace in conjunction with isotope dilution mass spectrometry for the quantitative analysis of volatiles in oil. Headspace reduces interference problems encountered with purge-and-trap. However, headspace quantitation can be questionable because the distribution of analytes is not

Company Confidential & Proprietary

APPENDIX C

LOGBOOK SHEETS

Company Confidential & Proprietary

TESTAMERICA NORTH CANTON ZHE LOGBOOK

Pre-Prep Batch	Sample No.	Ext. Vessel ID	Matrix	Sample Wt (g)	Ext. Buffer ID	Date On	Time On	Analyst On	Date Off	Time Off	Initials Off	Tumbler ID	Tumbler Speed 30±2 RPM	Ext. Fluid ID	Initial ZHE Pressure	Final ZHE Pressure	Comments

Company Confidential & Proprietary

TESTAMERICA NORTH CANTON ZHE LOGBOOK - MULTIPHASE

	A	B	C	D	E	F		G	H	
Sample Number	**Weight of Container + Sample (g)**	**Weight of Container + Residue (g)**	**Difference (A – B) Sample Weight (g)**	**Weight of the Syringe (or vials) (g)**	**Weight of the Syringe (or vials) + Filtrate (g)**	**Difference (E – D) Filtrate Weight (g)**	**Volume of Filtrate* (mL)**	**Difference (C – F) Wet Solids Weight (g)**	**G x 20 Buffer Amount (mL)**	**Initials**

* Filtrate volume only needed when filtrate is incompatible with leachate

TESTAMERICA NORTH CANTON TCLP LOGBOOK

				Pre-Test			% Dry Solids				Leach Start						Leach Finish					
Pre-Prep Batch	Sample No.	Parameters	Matrix	Wt (g) Sample	pH after water	pH after heating	Wt (g) Sample	Wt (g) Filter	Filter + Particulates Wt (g)	% Dry Solids	Wt (g) Sample	Buffer # / ID	Date On	Time On	pH On	Analyst On	Date Off	Time Off	pH Off	Initials Off	Tumbler ID	Comments

TESTAMERICA NORTH CANTON TCLP LOGBOOK – MULTIPHASE

	A	B	C	D	E	F		G	H		
Sample Number	Weight of Container + Sample (g)	Weight of Container + Residue (g)	Difference (A – B) Sample Weight (g)	Weight of the Filtrate Bottle (g)	Weight of the Filtrate bottle + Filtrate (g)	Difference (E-D) Filtrate Weight (g)	Volume of Filtrate* (mL)	Difference (C-F) Wet Solids Weight (g)	G x 20 Buffer Amount (mL)	Initials	Comments

* Filtrate volume only needed when filtrate is incompatible with leachate

Company Confidential & Proprietary

APPENDIX D

FLOW CHARTS

Company Confidential & Proprietary

Flow Chart 1. Preliminary Sample Evaluation (Section 11.2)

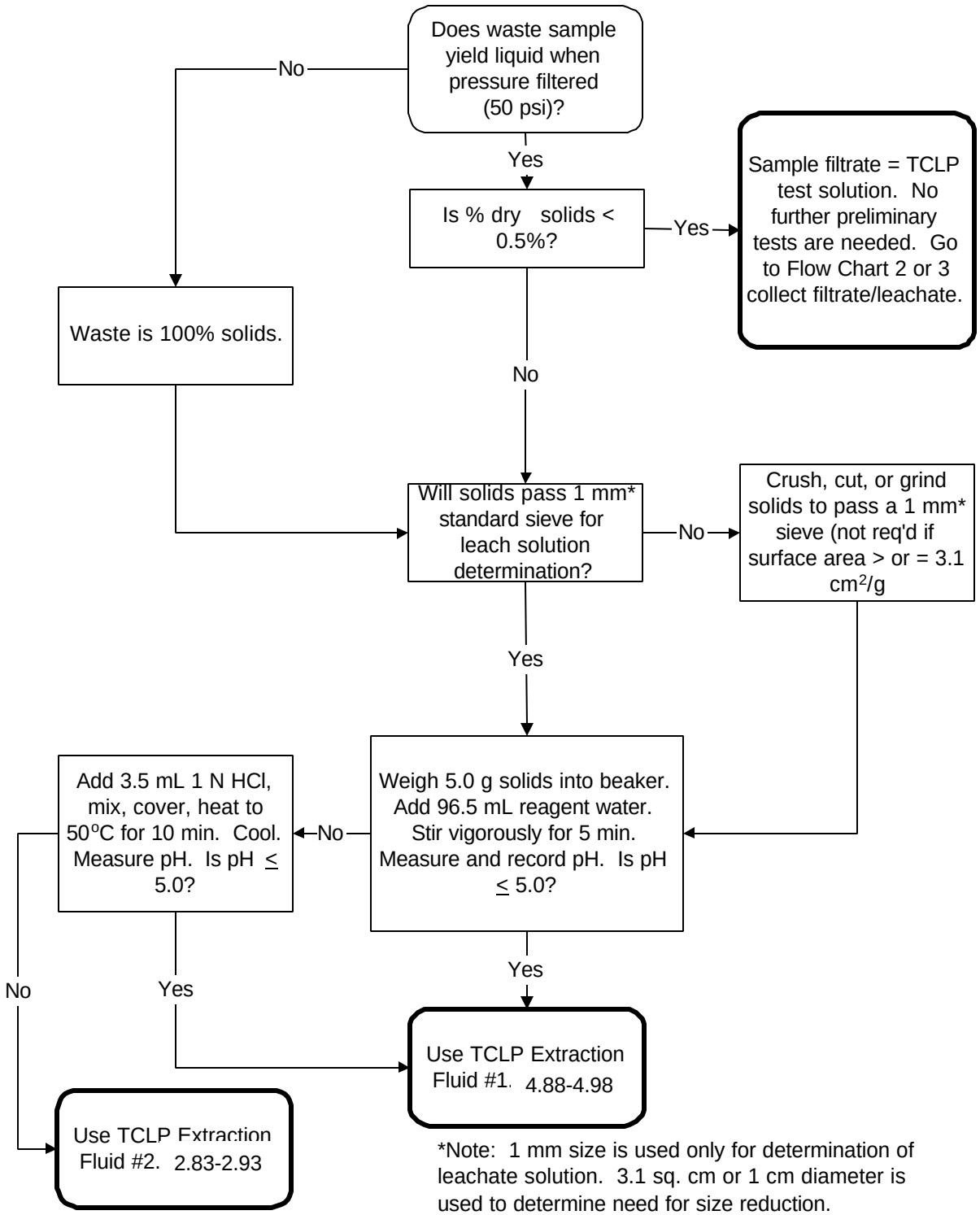

*Note: 1 mm size is used only for determination of leachate solution. 3.1 sq. cm or 1 cm diameter is used to determine need for size reduction.

Flow Chart 2. Bottle Extraction, Non-Volatile Constituents (Section 11.3)

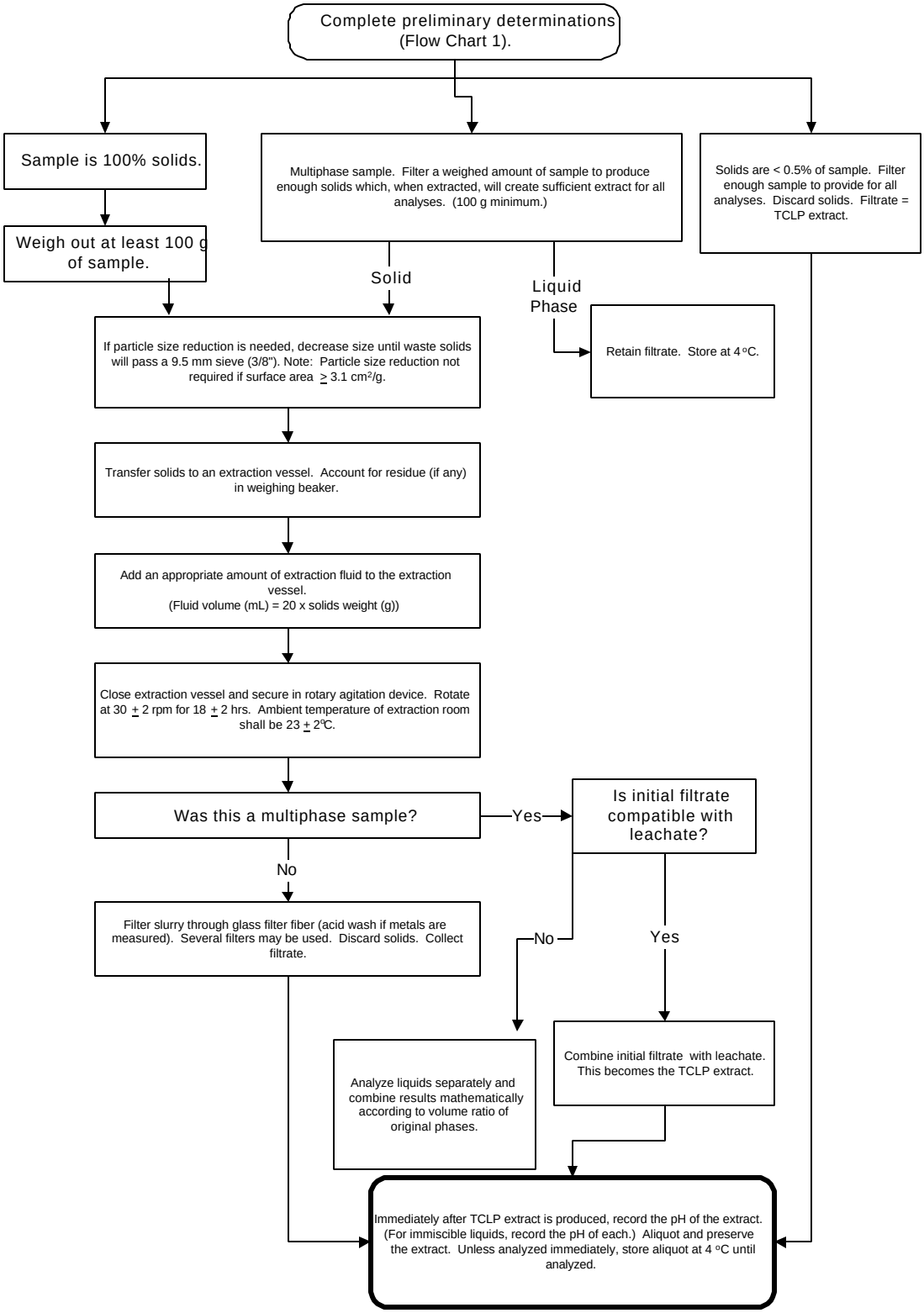

Flow Chart 3. ZHE Extraction, Volatile Constituents (Section 11.4)

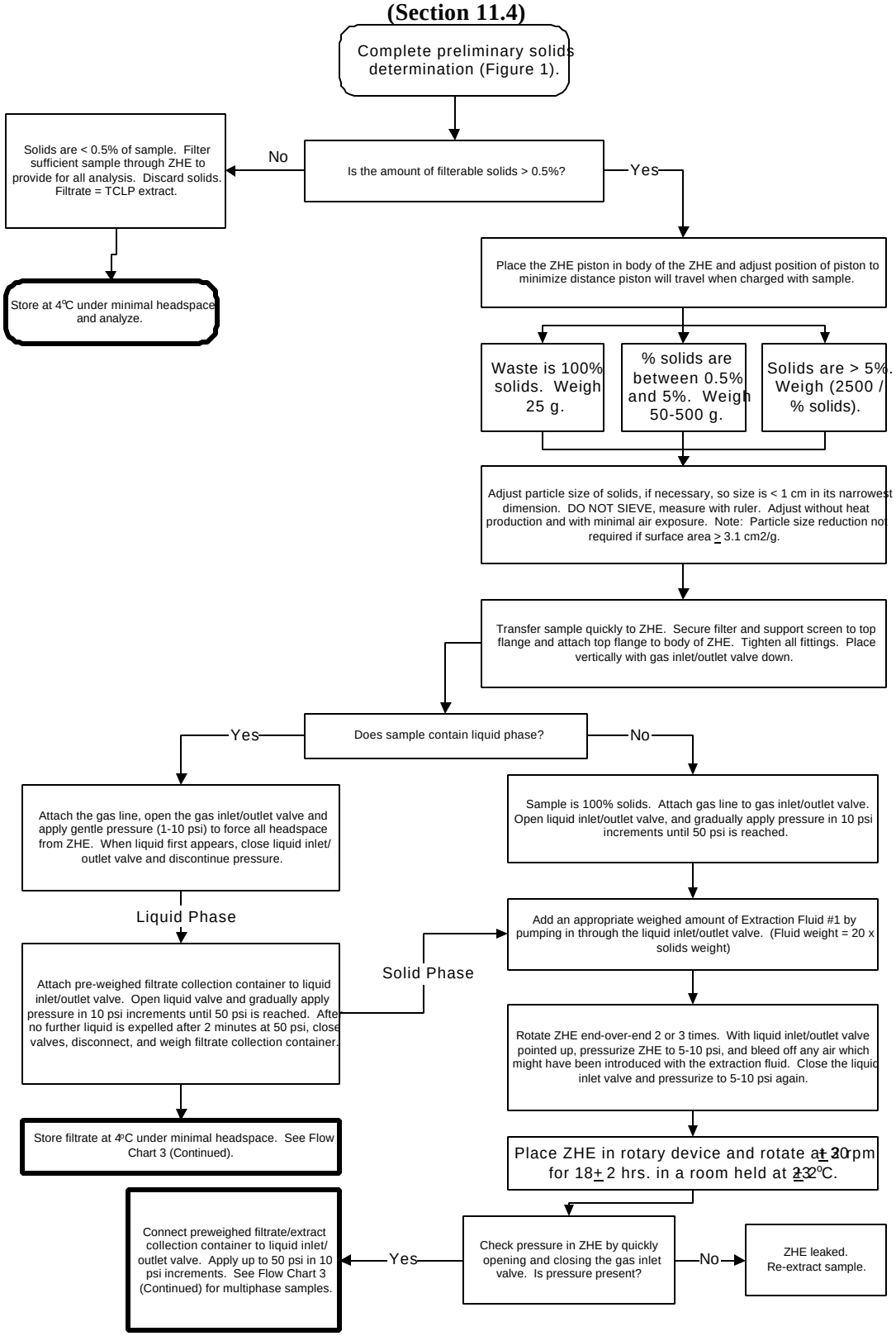

Flow Chart 3. ZHE Extraction (Continued)

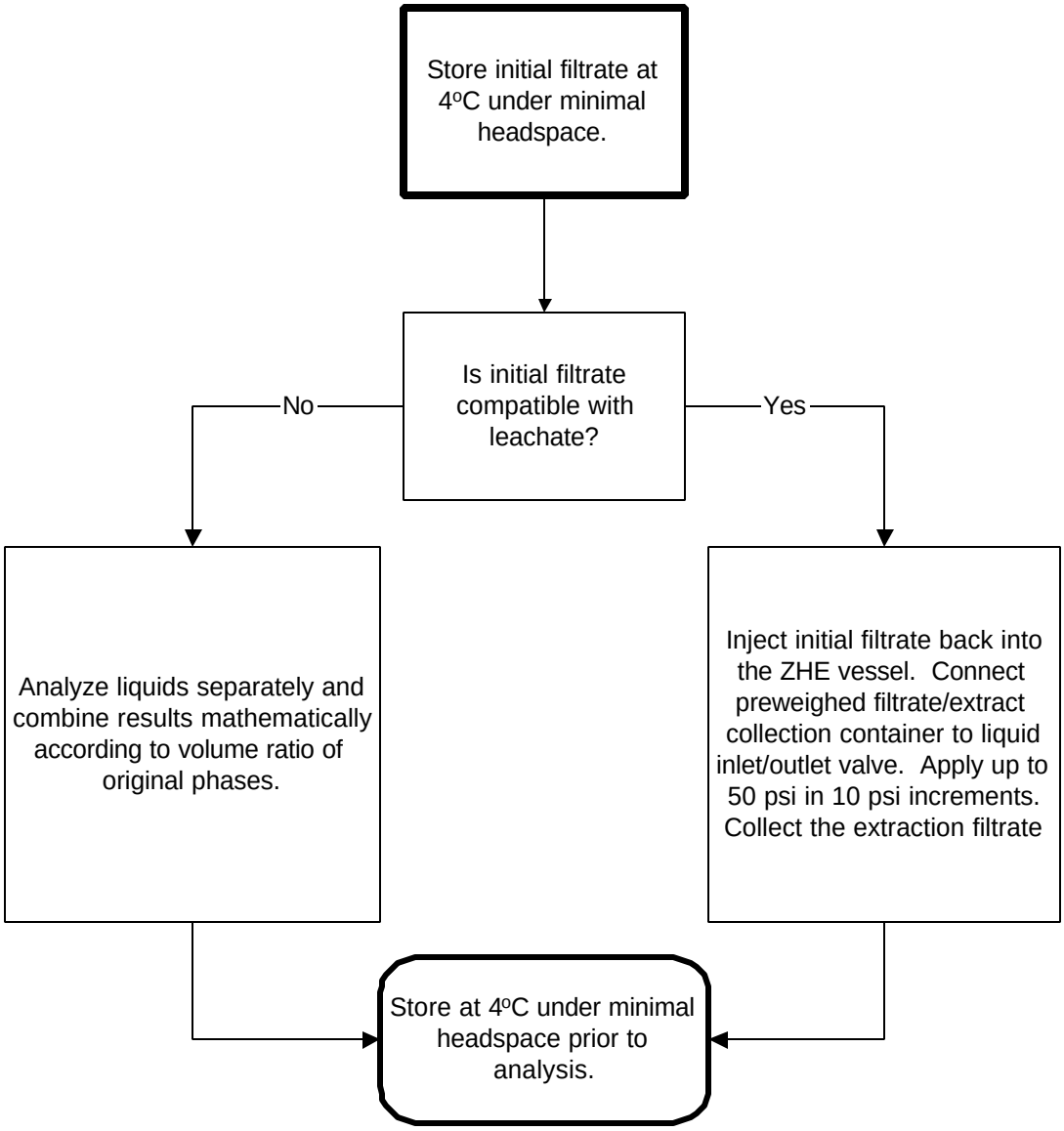

ATTACHMENT C. GEOTECHNICAL LABORATORY QA/QC MANUAL AND ASTM STANDARDS

BBCM
SOLUTIONS TO BUILD ON

QUALITY ASSURANCE/QUALITY CONTROL PROCEDURES WITH REGARDS TO THE INACTIVE LANDFILL ELYRIA, OH

Submitted to

BROWN AND CALDWELL
MIDDLEBURG HEIGHTS, OHIO

Prepared by

BBC&M ENGINEERING, INC.
CLEVELAND, OHIO

July 2009

BBC&M
SOLUTIONS TO BUILD ON

LABORATORY CERTIFICATION

LABORATORY FACILITIES TESTS AND PERSONNEL

BBC&M Engineering, Inc.'s laboratories are AASHTO (R18) and ODOT certified in the areas of geotechnical, concrete and aggregate testing and comply with strict ASTM standards.

The lab is equipped with an automated drop hammer for performing Standard and Modified Proctor tests (ASTM D698 and ASTM D1557). In addition, the laboratory has the equipment and personnel to perform liquid and plastic limits (Atterberg Limits), grain size analyses, and visual identifications (in accordance with the desired classification system - ie, ODOT, AASHTO, and many others). Also included are testing equipment for specific gravity, consolidation, direct shear, triaxial shear, and permeability tests: as well as a muffle furnace for organic content (LOI). Our Soils Laboratory Supervisor, Mr. John Jenkins, who oversees all laboratory test procedures and personnel, has over 40 years experience.

Our laboratory is equipped with a moisture cure room, which has a storage capacity for up to 1,750 cylinders, and numerous testing machines, including two compressive and flexural strength machines (up to 600,000 lb load) for testing concrete, masonry, grout, and mortar. The 600,000 lb load capacity is one of the largest testing machines in the state and allows for full scale testing of high strength concrete and fully grouted masonry prism samples. We test well over 10,000 concrete, grout and/or mortar samples each year. During peak periods, the laboratory will test over 50 samples in one day. All compression strength test results are reported either same day or the day following the test. Project managers are immediately notified of deficient break results so they can immediately contact site personnel. We also perform in-house testing on aggregate samples used in the ODOT QA/QC program, we test asphalt extraction, gradation and theoretical maximum density for mix verification and specification compliance, and we perform strength and material property testing on masonry specimens.

AASHTO R18

ASTM INTERNATIONAL Standards Worldwide

American Association of State Highway and Transportation Officials

AASHTO Accreditation Program - Certificate of Accreditation

This is to signify that

BBC & M Engineering Inc.

Valley View, Ohio

has demonstrated proficiency for the testing of construction materials
and has met the minimum requirements in AASHTO R18
set forth by the AASHTO Highway Subcommittee on Materials.

The scope of accreditation can be obtained by viewing
the AAP Directories of Accredited Laboratories (www.amrl.net)
or by contacting AMRL.

Executive Director

Chair, AASHTO Highway
Subcommittee on Materials

AAP®

AASHTO R18

April 7, 2009

METHOD FOR REVIEWING TECHNICIAN'S COMPETENCY

The laboratory and field supervisor are responsible for evaluating the competency of each technician at least once every twelve (12) months by requiring each technician to demonstrate the AASHTO and/or ASTM test procedures for which he/she has been trained to perform.

If a technician does not routinely perform a test, it may not be necessary to evaluate his or her competency to perform the test every twelve (12) months. However, the technician's competency shall be evaluated prior to performing the test.

Copies of the results of all competency evaluations shall be distributed to the field supervisor and the laboratory supervisor. Competency evaluation records shall be retained in the laboratory supervisor's office with the training records.

EQUIPMENT CALIBRATION, STANDARDIZATION, CHECK, AND MAINTENANCE POLICIES AND PROCEDURES

GENERAL POLICIES:

1. Required equipment shall be calibrated, standardized, checked, and maintained at specified intervals following the general procedures indicated below.

2. Newly acquired equipment without manufacturer's certification and equipment that has not been calibrated, standardized, checked, and maintained because it has been removed from service shall be calibrated, standardized, checked, and maintained before being placed in service.

3. When any of the test equipment is overloaded, mishandled, giving results that are suspect, or is not meeting specification tolerances, the Laboratory Supervisor shall remove it from service and clearly mark it. The equipment shall be returned to service only after appropriate repairs are made and calibration, standardization, check, and maintenance shows the equipment to function satisfactorily or to meet specification tolerances.

4. All equipment manuals and instructions are kept in office of the Laboratory Supervisor.

GENERAL PROCEDURES:

1. The Laboratory and Field Supervisor shall maintain a file for each piece of equipment used in the laboratory and/or the field, requiring calibration, standardization, check, and maintenance. The file for each piece of equipment shall contain detailed records of calibration, standardization, check, and maintenance work performed in chronological order and shall be kept in the Supervisor's office. Copies of the results of all equipment calibration, standardization, check, and maintenance work performed shall be distributed to the Laboratory Supervisor.

2. The Laboratory and Field Supervisor shall maintain a set of 12 labeled folders in their office - one for each month of the year. Each month's folder shall contain a partially completed record form for each piece of equipment requiring calibration, standardization, check, and maintenance during the month indicated on the folder's label.

3. During the first week in each month, the Supervisor shall remove the partially completed records form from the current month's folder and instruct appropriate staff to perform the necessary work within the next week and return the completed record forms.

4. The Supervisor shall prepare partially filled out record forms for each piece of equipment that month - identifying the equipment and the next date calibration, standardization, check, and maintenance work is required (Month and Year) - and file each partially filled out form in the appropriate monthly folder.

5. The Supervisor shall file each of the completed record forms in the appropriate equipment record file in chronological order.

Rev.1/18/2007

Procedure for Verifying Ovens

Calibration/Verification Procedure: G-1

Equipment Checked: Drying Oven

Purpose:

This method provides instructions for verifying the dial settings on general-purpose drying ovens.

Inspection Equipment Required:

1. A calibrated thermometer graduated in 1.0□C increments having a range which includes the temperature range to be checked.

2. A brass thermometer well to retain heat while the oven door is open. This is essential for a constant temperature reading.

3. A clothes pin to hold the thermometer in such a manner as to enable the operator to read the scale easily from outside or inside the oven.

Tolerance:

Drying ovens shall be capable of maintaining a constant temperature range listed in the appropriate test methods.

Procedure:

1. Place the thermometer inside the brass well with the clothes pin attached to the thermometer. Position the thermometer on the shelf where the samples are normally dried.

2. Take the first reading at least 1 hour after closing the oven (oven should remain undisturbed).

3. Take as many reading as necessary to determine if the temperature range is within the specified tolerance (three consecutive readings, taken no less than ½ hour apart, within the tolerance allowed are adequate).

4. Adjust the temperature of the oven if an observed temperature reading is outside the tolerance specified (allow at least ½ hour for the temperature to stabilize between each adjustment). Return to step 3.

Rev. 1/18/2007

Procedure for Verifying Sieves
(ASTM E11, AASHTO M92)

Verification Procedure: **G-2**

Equipment Checked: **Sieves**

Purpose:

This method provides instructions for checking the physical condition of laboratory test sieves ranging in size from 3" (75mm) to No. 200 (0.075mm) and for measuring the openings of coarse sieves having openings greater than or equal to No.4 (4.75mm).

Inspection Equipment Required:

Calipers, capable of measuring to 0.0004 in (0.01mm) should be used.

Tolerance:

Sieves shall meet the physical requirements specified in AASHTO M92, ASTM E11

Procedure:

1. For sieves having openings equal to or greater to or greater than 4.75mm(No.4), select and measure, using the calipers, the dimensions of at least 4 or 5 sieve openings in each sieve to ensure that the openings in the wire cloth conform to the requirements in Table 1 of AASHTO M92 (ASTM E11). Be sure to include, in the selection, any openings that appear distorted or unusual in size. Measure each of the openings as the distance between parallel wires measured at the center of each opening. If a sieve has less than 5 full openings, measure all full openings.
2. For sieves smaller than 4.75mm (no.4), inspect the sieve cloth. If obvious deviations, such as weaving defects, creases, wrinkles, or excessive foreign matter in the cloth are found, the wire cloth is unacceptable.
3. Inspect the general condition of the sieve. Check the frame and solder joints for cracks or holes (check for pinholes in the finer sieves).
4. Ensure the sieve has an appropriate label.
5. Check for tightness of the wires on each individual sieve.

Procedure for Verifying Mechanical Sieve Shaker

Verification Procedure: **G-3**

Equipment Checked: Mechanical Sieve Shaker **(AASHTO T-27) (ASTM C-136) (ASTM D-422)**

Purpose:

This method provides instructions for checking the sieving thoroughness versus time.

Inspection equipment required:

1. Set of verified 8" sieves
2. Timer
3. Balance

Procedure:

1. Select sample for sieving. The sample should contain grain size particles #200 up to at least ½ " in diameter. Use 2000g for samples up to ½", and 5000g for samples up to 3/4" in diameter. (See ASTM C-136 Sec 7.4 for other test sample sizes) Limit only a single layer of particles of material per each sieve. The sieve is not to be over loaded.

2. Place sample on sieves and shake for at least 1 minute in mechanical shaker to be verified, but no longer than 10 - 12 minutes. Record shake time.

3. Starting with the largest sieve used. Record the weight of the material retained in the top sieve. Place a pan underneath this individual sieve and place the weighed material on to the 8" sieve. Cover top of sieve.

4. Shake for 1 minute by hand. If the size of the mounted testing sieves makes the described sieving motion impractical, use the 203-mm (8 in sieve) diameter sieves to verify the sufficiency of sieving. While shaking, the sieve should be struck sharply with the other hand about 150 times per minute while slightly inclined, then rotated 60 degrees every 25 times.

5. Record the weight of the material retained in the pan. If more than 1% of the original weight from step 3, add one minute to the mechanical shaker time.

6. Find the appropriate time for sieving by determining when the weight change on each sieve was less than 1 % in 1 minute.

Procedure for Verifying Temperature Measuring Devices

Calibration/Verification Procedure: G-6

Equipment Checked: **Thermometers (AASHTO T88, T100) (ASTM D422, D854)**

Purpose:

This procedure provides instructions for checking the accuracy of thermometers.

Inspection Equipment Required:

1. Calibrated thermometer, readable to 0.1 °C, having a verified accuracy within the tolerance listed in above test methods.

Tolerance:

Thermometers shall meet the accuracy requirements specified in the applicable test methods listed above.

Procedure:

1. Fill beaker with distilled water and ice, and additional beaker with just distilled water.

2. Place thermometers in beaker with distilled water and ice. Record temperature to the nearest 0.1 °C. Repeat 3 more times.

3. Place thermometers in beaker with just distilled water. Record temperature to the nearest 0.1 °C. Repeat 3 more times.

Procedure for Verifying Manual Compaction Hammers

Calibration/Verification Procedure: S-1

Equipment Checked:

MANUAL HAMMER (AASHTO T99, T180) (ASTM D698, D1557)

Purpose:

This method provides instructions for checking the critical dimensions of the proctor hammers.

Inspection Equipment Required:

1. Calipers readable to 0.01 mm.
2. Tape measure readable to 1 mm.
3. Balance, capacity 5 kg, readable to 1 g.

Tolerance:

Equipment shall meet the dimensional tolerances specified in the applicable test method.

Procedure:

1. Measure and record the diameter of the rammer face determined by taking two reading 90° apart using the calipers.
2. Pull up the handle, measure and record the drop height of the hammer. Determine this height inside the guide-sleeve using the tape measure.
3. Remove the hammer from the guide-sleeve. Determine and record its mass to the nearest 1 g.
4. Measure and record the diameters of the vent holes near the end of the hammer.

Rev. 1/16/2007

Procedure for Verifying Soils Test Molds

Calibration/Verification Procedure: S-2

Equipment Checked: **MOLDS (AASHTO T99, T134, T135, T136, T180, T190, T193) (ASTM D698, D558, D559, D560, D1557, D2844, D1883)**

Purpose:

This procedure provides instructions for checking the critical dimensions of 100, 150, and 200 mm (4, 6, and 8 in.) molds used in soil testing.

Inspection:

1. Calipers, capable of measuring the height and inside diameter of the molds and readable to 0.01 in.

Tolerance:

The height and diameter of the molds checked shall meet the dimensional tolerances specified in the applicable test method listed above.

Procedure:

1. Measure and record the inside diameter of the mold to the nearest 0.01 in. Rotate the mold 90° (1/4 turn) and measure and record the inside diameter again.

2. Turn the mold over and repeat Step 1.

3. Measure and record the height of the mold to the nearest 0.01 in. Rotate the mold 90° (1/4 turn) and measure and record the height again.

Rev. 2/16/09

Procedure for Calibration of Straightedge

Calibration/Verification Procedure: S-5

Equipment checked: Straightedge (AASHTO T99) (ASTM D 698 & D 1557)

Purpose:

This Procedure provides instruction for determining the true edge in terms of the trimming the soil in the mold.

Inspection Equipment Required:

1. Planed flat surface.
2. Calipers readable to 0.01 mm.
3. Feeler Gauge 0.250 mm (.01 in)

Tolerance:

The straightedge shall be of hardened-steel of at least 250 mm (10 in.) In length with at least one beveled edge and one longitudinal surface. The beveled edge shall be plane within 0.250 mm per 250 mm (0.01 in. Per 10 in.)

Procedure:

1. The straightedge shall be positioned beside a known planed flat surface to determine visually if the beveled edge is excessively worn as not to be a true straightedge.
2. When the straightedge appears to be excessively worn it shall be machined to meet the required tolerances or discarded and replaced.

Revised 12/18/08

Procedure for Verifying Liquid Limit Device (ASTM D4318)

Verification Procedure: **S-8**

Equipment Checked: **Liquid Limit Device and Grooving Tool**

Purpose:

This method provides instructions for calibrating the wear on the liquid limit device and grooving tool. The liquid limit device and grooving tool are to be checked daily, verified annually.

Inspection Equipment Required:

1. Calipers, capable of measuring to 0.01mm.

2. Metal block gage for adjusting the height of the drop of the cup. Gage shall have these dimensions: 10mm thick.

Procedure:

1. Determine if the limit device is clean. Verify that the cup is firmly attached to the cup hanger. Do this by checking the tightness of the screw which attaches the two together.

2. Check the wear of the cup. If the grooving tool has worn a depression in the cup at least 0.1mm deep or when the rim of the cup has been reduced to half its original thickness, it must be replaced or repaired.

3. Check the wear of the base. The spot on the base where the cup makes contact should be worn no greater than 10mm in diameter. If the wear spot is greater, the base needs to be machined to remove the worn spot, as long as the resurfacing does not make the base thinner than specified and other dimensions are maintained.

4. Verify that the cup hanger pivot does not bind and that it is not worn, so that it allows no more than a 3mm side-to-side movement of the lowest point of the rim. The cam shall not be worn to the point that the cup will drop before the cup hanger loses contact with the cam.

Rev. 2/12/2009

Procedure for Calibration of Hydrometers and Sodium Hexametaphosphate Solution

Calibration/Verification Procedure: S-9

Equipment Checked: Hydrometer Bulbs (AASHTO T88) (ASTM D 422)

Purpose:
This procedure provides instruction for determining the true depth in terms of the hydrometer reading.

Inspection Equipment Required:

1. 1000 ml Sedimentation Cylinder
2. Prepared solution of distilled or demineralized water and dispersing agent
3. Thermometer, readable to 0.5°
4. Water bath
5. Graph paper
6. Hydrometer bulb to be calibrated
7. Digital Calipers

Tolerance:
The equipment shall meet the tolerance specified in test methods T88 and D422.

Procedure:

1. Prepare 1000 ml of liquid composed of distilled or de-mineralized water and dispersion agent in the same proportions that are used in the hydrometer test.

2. Place the liquid in the sedimentation cylinder and the cylinder in the water bath. Set the water bath to the lowest temperature expected to be found while running the hydrometer test.

3. When the temperature of the liquid becomes constant, insert the hydrometer and, after a short interval read the hydrometer at the top of the meniscus formed on the stem.

4. For hydrometer 151 H the composite correction is the difference between the reading and one.

5. Bring the liquid and the hydrometer to the other temperature to be used, and secure the composite correction as before.

6. Measure the critical dimensions of the hydrometer bulb. (See attached sheet.)

Procedure for Verifying Hydrometer Measurements

09/17/04 Calibration/Verification Procedure: S-10

Equipment Checked: **Hydrometer 151H (AASHTO T88) (ASTM D422)**

Purpose:

This method provides instructions for checking the critical dimensions of the hydrometer 151H

Inspection Equipment Required:

☐ 1. Calipers readable to 0.01 mm.

Tolerance:

Equipment shall meet the dimensional tolerances specified in the applicable test method.

Procedure:

☐ 1. Measure and record middle diameter of the hydrometer. Take 3 readings equally spaced around the circumference. Average the readings.

☐ 2. Measure and record from the middle diameter to the tip of the bulb. Take thee readings equally spaced from the tip and around the circumference. Average the readings.

☐ 3. Measure and record from the top of the bulb to the tip of the bulb. Take thee readings equally spaced from the tip and around the circumference of the stem and bulb intersection. Average the readings.

☐ 4. Measure and record from the zero line to the last reading of the hydrometer. Take thee readings equally spaced from the zero line to the last reading of the hydrometer. Average the readings.

☐ 5. Measure and record from the zero line of the hydrometer to the bulb tip. Take thee readings equally spaced from the zero line to the hydrometer bulb tip. Average the readings.

☐ 6. Compare average readings to make sure hydrometer is within AASTO T-88

PREPARING AND CHECKING TEST REPORTS

Test results are recorded on standard laboratory worksheets which are submitted to the laboratory supervisor or the assistant laboratory supervisor assigned to the project. The test results are calculated, checked and reviewed. The original test results are submitted to the Project Engineer for review and reporting. All engineering reports and calculations are submitted for and in house peer review prior to submitting the report. Any laboratory test records as well as the report are then maintained by the Project Engineer, who also sees that they are filed in the project folder. If the project is to be reported by the laboratory personnel, an original and two copies are made. The original laboratory data and one copy of the report is filed in the project folder. One copy of the test report is sent to the client. The project folder is kept on file in the file room located in the front offices.

Amending Reports

When a report must be amended due to error or additions, a report form shall be filled out indicating the amended test results and the reason for the amendment. This form shall be labeled amended. This form shall be attached to the original report and processed in the normal manner, and filed with the original report. Reports are retained indefinitely.

QA/QC OVERVIEW

At BBC&M Engineering, the objectives of the Quality Control/Assurance Program are as follows:

- ☞ To ensure that the data produced in our laboratory and field testing is accurate and produced within known limits of precision using accepted methods.
- ☞ To ensure that the data reported was obtained on the sample submitted by the client.
- ☞ To ensure traceability of the results: who ran the test, who collected the raw data, who and what instruments were used, etc.
- ☞ To demonstrate that all precautions are being taken to protect the security of the data against loss, theft, accident or tampering.

BBC&M Engineering is committed to providing the necessary human, technical, and financial resources needed to achieve these objectives.

Each employee at BBC&M; from technical, to clerical, to managerial personnel is responsible for his own part in assuring that the Quality Control/Quality Assurance objectives that we have committed to are attained.

The Quality Control/Quality Assurance Manual is available upon request.

ASTM D 2216
STANDARD TEST METHODS FOR LABORATORY DETERMINATION OF WATER (MOISTURE) CONTENT OF SOIL AND ROCK BY MASS

Designation: D 2216 – 05

Standard Test Methods for Laboratory Determination of Water (Moisture) Content of Soil and Rock by Mass[1]

This standard is issued under the fixed designation D 2216; the number immediately following the designation indicates the year of original adoption or, in the case of revision, the year of last revision. A number in parentheses indicates the year of last reapproval. A superscript epsilon (ϵ) indicates an editorial change since the last revision or reapproval.

This standard has been approved for use by agencies of the Department of Defense.

1. Scope*

1.1 These test methods cover the laboratory determination of the water (moisture) content by mass of soil, rock, and similar materials where the reduction in mass by drying is due to loss of water except as noted in 1.4, 1.5, and 1.7. For simplicity, the word "material" shall refer to soil, rock or aggregate whichever is most applicable.

1.2 Some disciplines, such as soil science, need to determine water content on the basis of volume. Such determinations are beyond the scope of this test method.

1.3 The water content of a material is defined in 3.2.1.

1.4 The term "solid material" as used in geotechnical engineering is typically assumed to mean naturally occurring mineral particles of soil and rock that are not readily soluble in water. Therefore, the water content of materials containing extraneous matter (such as cement etc.) may require special treatment or a qualified definition of water content. In addition, some organic materials may be decomposed by oven drying at the standard drying temperature for this method (110°C). Materials containing gypsum (calcium sulfate dihydrate) or other compounds having significant amounts of hydrated water may present a special problem as this material slowly dehydrates at the standard drying temperature (110°C) and at very low relative humidity, forming a compound (such as calcium sulfate hemihydrate) that is not normally present in natural materials except in some desert soils. In order to reduce the degree of dehydration of gypsum in those materials containing gypsum or to reduce decomposition in highly/fibrous organic soils, it may be desirable to dry the materials at 60°C or in a desiccator at room temperature. Thus, when a drying temperature is used which is different from the standard drying temperature as defined by this test method, the resulting water content may be different from the standard water content determined at the standard drying temperature of 110°C.

NOTE 1—Test Method D 2974 provides an alternate procedure for determining water content of peat materials.

1.5 Materials containing water with substantial amounts of soluble solids (such as salt in the case of marine sediments) when tested by this method will give a mass of solids that includes the previously soluble dissolved solids. These materials require special treatment to remove or account for the presence of precipitated solids in the dry mass of the specimen, or a qualified definition of water content must be used. For example, see Test Method D 4542 regarding information on marine sediments.

1.6 This test standard requires several hours for proper drying of the water content specimen. Test Methods D 4643, D 4944 and D 4959 provide less time-consuming processes for determining water content. See Gilbert[2] for details on the background of Test Method D 4643.

1.7 Two test methods are provided in this standard. The methods differ in the significant digits reported and the size of the specimen (mass) required. The method to be used may be specified by the requesting authority; otherwise Method A shall be performed.

1.7.1 *Method A*—The water content by mass is recorded to the nearest 1 %. For cases of dispute, Method A is the referee method.

1.7.2 *Method B*—The water content by mass is recorded to the nearest 0.1 %.

1.8 This standard requires the drying of material in an oven. If the material being dried is contaminated with certain chemicals, health and safety hazards can exist. Therefore, this standard should not be used in determining the water content of contaminated soils unless adequate health and safety precautions are taken.

1.9 *Units*—The values stated in SI units shall be regarded as standard excluding the Alternative Sieve Sizes listed in Table 1. No other units of measurement are included in this test method.

1.10 Refer to Practice D 6026 for guidance concerning the use of significant figures that shall determine whether Method, A or B is required. This is especially important if the water

[1] This test method is under the jurisdiction of ASTM Committee D18 on Soil and Rock and is the direct responsibility of Subcommittee D18.03 on Texture, Plasticity and Density Characteristics of Soils.

Current edition approved March 1, 2005. Published April 2005. Originally approved in 1963. Last previous edition approved in 1998 as D 2216 – 98.

[2] Gilbert, P.A., "Computer Controlled Microwave Oven System for Rapid Water Content Determination", Tech. Report GL-88-21, Department of the Army, Waterways Experiment Station, Corps of Engineers, Vicksburg, MS, November 1988.

***A Summary of Changes section appears at the end of this standard.**

Copyright © ASTM International, 100 Barr Harbor Drive, PO Box C700, West Conshohocken, PA 19428-2959, United States.

TABLE 1 Minimum Requirements for Mass of Test Specimen, and Balance Readability

Maximum Particle Size (100 % Passing)		Method A Water Content Recorded to ±1 %		Method B Water Content Recorded to ±0.1 %	
SI Unit Sieve Size	Alternative Sieve Size	Specimen Mass	Balance Readability (g)	Specimen Mass (g)	Balance Readability (g)
75.0 mm	3 in	5 kg	10	50 kg	10
37.5 mm	1-½ in.	1 kg	10	10 kg	10
19.0 mm	¾ in.	250 g	1	2.5 kg	1
9.5 mm	⅜ in.	50 g	0.1	500 g	0.1
4.75 mm	No. 4	20 g	0.1	100 g	0.1
2.00 mm	No. 10	20 g	0.1	20 g	0.01

content will be used to calculate other relationships such as moist mass to dry mass or vice versa, wet unit weight to dry unit weight or vice versa, and total density to dry density or vice versa. For example, if four significant digits are required in any of the above calculations, then the water content has to be recorded to the nearest 0.1 %. This occurs since 1 plus the water content (not in percent) will have four significant digits regardless of what the value of the water content is; that is, 1 plus 0.1/100 = 1.001, a value with four significant digits. While, if three significant digits are acceptable, then the water content can be recorded to the nearest 1 %.

1.11 *This standard does not purport to address all of the safety concerns, if any, associated with its use. It is the responsibility of the user of this standard to establish appropriate safety and health practices and determine the applicability of regulatory limitations prior to use.*

2. Referenced Documents

2.1 *ASTM Standards:* [3]

D 653 Terminology Relating to Soil, Rock, and Contained Fluids

D 2974 Test Methods for Moisture, Ash, and Organic Matter of Peat and Other Organic Soils

D 3740 Practice for Minimum Requirements for Agencies Engaged in the Testing and/or Inspection of Soil and Rock as Used in Engineering Design and Construction

D 4220 Practices for Preserving and Transporting Soil Samples

D 4318 Test Method for Liquid Limit, Plastic Limit, and Plasticity Index of Soils

D 4542 Test Method for Pore-Water Extraction and Determination of the Soluble Salt Content of Soils by Refractometer

D 4643 Test Method for Determination of Water (Moisture) Content of Soil by the Microwave Oven Method

D 4753 Specification for Evaluating, Selecting, and Specifying Balances and Standard Masses for Use in Soil, Rock, and Construction Materials Testing

D 4944 Test Method for Field Determination of Water (Moisture) Content of Soil by the Calcium Carbide Gas Pressure Tester Method

D 4959 Test Method for Determination of Water (Moisture) Content of Soil By Direct Heating Method

D 5079 Practices for Preserving and Transporting Rock Core Samples

D 6026 Practice for Using Significant Digits in Calculating and Reporting Geotechnical Test Data

E 145 Specification for Gravity-Convection and Forced-Ventilation Ovens

3. Terminology

3.1 Refer to Terminology D 653 for standard definitions of terms.

3.2 *Definitions:*

3.2.1 *water content by mass (of a material)*—the ratio of the mass of water contained in the pore spaces of soil or rock material, to the solid mass of particles in that material, expressed as a percentage. A standard temperature of 110 ± 5°C is used to determine these masses.

3.3 *Definitions of Terms Specific to This Standard:*

3.3.1 *constant dry mass (of a material)*—the state that a water content specimen has attained when further heating causes, or would cause, less than 1 % or 0.1 % additional loss in mass for Method A or B respectively. The time required to obtain constant dry mass will vary depending on numerous factors. The influence of these factors generally can be established by good judgement, and experience with the materials being tested and the apparatus being used.

4. Summary of Test Method

4.1 A test specimen is dried in an oven at a temperature of 110 ± 5°C to a constant mass. The loss of mass due to drying is considered to be water. The water content is calculated using the mass of water and the mass of the dry specimen.

5. Significance and Use

5.1 For many materials, the water content is one of the most significant index properties used in establishing a correlation between soil behavior and its index properties.

5.2 The water content of a material is used in expressing the phase relationships of air, water, and solids in a given volume of material.

5.3 In fine-grained (cohesive) soils, the consistency of a given soil type depends on its water content. The water content of a soil, along with its liquid and plastic limits as determined by Test Method D 4318, is used to express its relative consistency or liquidity index.

[3] For referenced ASTM standards, visit the ASTM website, www.astm.org, or contact ASTM Customer Service at service@astm.org. For *Annual Book of ASTM Standards* volume information, refer to the standard's Document Summary page on the ASTM website.

NOTE 2—The quality of the result produced by this standard is dependent on the competence of the personnel performing it, and the suitability of the equipment and facilities used. Agencies that meet the criteria of Practice D 3740 are generally considered capable of competent and objective testing/sampling/inspection/etc. Users of this standard are cautioned that compliance with Practice D 3740 does not in itself ensure reliable results. Reliable results depend on many factors; Practice D 3740 provides a means of evaluating some of those factors.

6. Apparatus

6.1 *Drying Oven*—Vented, thermostatically-controlled, preferably of the forced-draft type, meeting the requirements of Specification E 145 and capable of maintaining a uniform temperature of 110 ± 5°C throughout the drying chamber.

6.2 *Balances*—All balances must meet the requirements of Specification D 4753 and this section. A Class GP1 balance of 0.01 g readability is required for specimens having a mass of up to 200 g (excluding mass of specimen container) and a Class GP2 balance of 0.1 g readability is required for specimens having a mass over 200 g. However, the balance used may be controlled by the number of significant digits needed (see 1.10).

6.3 *Specimen Containers*—Suitable containers made of material resistant to corrosion and change in mass upon repeated heating, cooling, exposure to materials of varying pH, and cleaning. Unless a dessicator is used, containers with close-fitting lids shall be used for testing specimens having a mass of less than about 200 g; while for specimens having a mass greater than about 200 g, containers without lids may be used (see Note 3). One uniquely numbered (identified) container or number-matched container and lid combination as required is needed for each water content determination.

NOTE 3—The purpose of close-fitting lids is to prevent loss of moisture from specimens before initial mass determination, and to prevent absorption of moisture from the atmosphere following drying and before final mass determination.

6.4 *Desiccator (Optional)*—A desiccator cabinet or large desiccator jar of suitable size containing silica gel or anhydrous calcium sulfate. It is preferable to use a desiccant that changes color twhen it needs to be reconstituted.

NOTE 4—Anhydrous calcium sulfate is sold under the trade name Drierite.

6.5 *Container Handling Apparatus*, gloves, tongs, or suitable holder for moving and handling hot containers after drying.

6.6 *Miscellaneous*, knives, spatulas, scoops, quartering cloth, wire saws, etc., as required.

7. Samples

7.1 Soil samples shall be preserved and transported in accordance with Practice D 4220 Section 8 Groups B, C, or D soils. Rock samples shall be preserved and transported in accordance with Practice D 5079 section 7.5.2, Special Care Rock. Keep the samples that are stored prior to testing in non-corrodible airtight containers at a temperature between approximately 3 and 30°C and in an area that prevents direct contact with sunlight. Disturbed samples in jars or other containers shall be stored in such a way as to reduce moisture condensation on the insides of the containers.

7.2 The water content determination should be done as soon as practicable after sampling, especially if potentially corrodible containers (such as thin-walled steel tubes, paint cans, etc.) or plastic sample bags are used.

8. Test Specimen

8.1 For water contents being determined in conjunction with another ASTM method, the specimen mass requirement stated in that method shall be used if one is provided. If no minimum specimen mass is provided in that method then the values given below shall apply. See Howard[4] for background data for the values listed.

8.2 The minimum specimen mass of moist material selected to be representative of the total sample is based on visual maximum particle size in the sample and the Method (Method A or B) used to record the data. Minimum specimen mass and balance readability shall be in accordance with Table 1.

8.3 Using a test specimen smaller than the minimum indicated in 8.2 requires discretion, though it may be adequate for the purposes of the test. Any specimen used not meeting these requirements shall be noted on the test data forms or test data sheets.

8.4 When working with a small (less than 200 g) specimen containing a relatively large gravel particle, it is appropriate not to include this particle in the test specimen. However, any discarded material shall be described and noted on the test data form/sheet.

8.5 For those samples consisting entirely of intact rock or gravel-size aggregate, the minimum specimen mass shall be 500 g. Representative portions of the sample may be broken into smaller particles. The particle size is dictated by the specimen mass, the container volume and the balance being used to determine constant mass, see 10.4. Specimen masses as small as 200 g may be tested if water contents of only two significant digits are acceptable.

9. Test Specimen Selection

9.1 When the test specimen is a portion of a larger amount of material, the specimen must be selected to be representative of the water condition of the entire amount of material. The manner in which the test specimen is selected depends on the purpose and application of the test, type of material being tested, the water condition, and the type of sample (from another test, bag, block, etc.).

9.2 For disturbed samples such as trimmings, bag samples, etc; obtain the test specimen by one of the following methods (listed in order of preference):

9.2.1 If the material is such that it can be manipulated and handled without significant moisture loss and segregation, the material should be mixed thoroughly. Select a representative portion using a scoop of a size that no more than a few scoopfuls are required to obtain the proper size of specimen defined in 8.2. Combine all the portions for the test specimen.

[4] Howard, A. K., "Minimum Test Specimen Mass for Moisture Content Determination", *Geotechnical Testing Journal*, ASTM., Vol. 12, No. 1, March 1989, pp. 39-44.

9.2.2 If the material is such that it cannot be thoroughly mixed or mixed and sampled by a scoop, form a stockpile of the material, mixing as much as possible. Take at least five portions of material at random locations using a sampling tube, shovel, scoop, trowel, or similar device appropriate to the maximum particle size present in the material. Combine all the portions for the test specimen.

9.2.3 If the material or conditions are such that a stockpile cannot be formed, take as many portions of the material as practical, using random locations that will best represent the moisture condition. Combine all the portions for the test specimen.

9.3 Intact samples such as block, tube, split barrel, etc, obtain the test specimen by one of the following methods depending on the purpose and potential use of the sample:

9.3.1 Using a knife, wire saw, or other sharp cutting device, trim the outside portion of the sample a sufficient distance to see if the material is layered, and to remove material that appears more dry or more wet than the main portion of the sample. If the existence of layering is questionable, slice the sample in half. If the material is layered, see 9.3.3.

9.3.2 If the material is not layered, obtain the specimen meeting the mass requirements in 8.2 by: *(1)* taking all or one-half of the interval being tested; *(2)* trimming a representative slice from the interval being tested; or *(3)* trimming the exposed surface of one-half or from the interval being tested.

NOTE 5—Migration of moisture in some cohesionless soils may require that the entire sample be tested.

9.3.3 If a layered material (or more than one material type is encountered), select an average specimen, or individual specimens, or both. Specimens must be properly identified as to location, or what they represent, and appropriate remarks entered on the test data forms or test data sheets.

10. Procedure

10.1 Determine and record the mass of the clean and dry specimen container and its lid, if used along with its identification number.

10.2 Select representative test specimens in accordance with Section 9.

10.3 Place the moist test specimen in the container and, if used, set the lid securely in position. Determine the mass of the container and moist specimen using a balance (see 8.2 and Table 1) selected on the basis of the specimen mass. Record this value.

NOTE 6—To assist in the oven drying of large test specimens, they should be placed in containers having a large surface area (such as pans) and the material broken up into smaller aggregations.

10.4 Remove the lid (if used) and place the container with the moist specimen in the drying oven. Dry the specimen to a constant mass. Maintain the drying oven at 110 ± 5°C unless otherwise specified (see 1.4). The time required to obtain constant mass will vary depending on the type of material, size of specimen, oven type and capacity, and other factors. The influence of these factors generally can be established by good judgment and experience with the materials being tested and the apparatus being used.

10.4.1 In most cases, drying a test specimen overnight (about 12 to 16 h) are sufficient, especially for forced draft ovens. In cases where there is doubt concerning the adequacy of drying to a constant dry mass, see 3.3.1 and check for additional loss in mass with additional oven drying over an adequate time period, for a minimum time period of two hours, however, increasing drying time with increasing specimen mass. A rapid check to see if a relatively large specimen (> than about 100 g of material) is dry; place a small strip of torn paper on top of the material while it is in the oven or just upon removal from the oven, if the paper strip curls the material is **not** dry. Specimens of sand may often be dried to constant mass in a period of about 4 h, when a forced-draft oven is used.

10.4.2 Since some dry materials may absorb moisture from drying specimens, dried specimens shall be removed before placing moist specimens in the same oven; unless they are being dried overnight.

10.5 After the specimen has dried to constant mass, remove the container from the oven (and replace the lid if used). Allow the specimen and container to cool to room temperature or until the container can be handled comfortably with bare hands and the operation of the balance will not be affected by convection currents and/or its being heated. Determine the mass of the container and oven-dried specimen using the same type/capacity balance used in 10.3. Record this value. Tight fitting lids shall be used if it appears that the specimen is absorbing moisture from the air prior to determination of its dry mass.

10.5.1 Cooling in a desiccator is acceptable in place of tight fitting lids since it greatly reduces absorption of moisture from the atmosphere during cooling.

10.6 A copy of a sample data sheet is shown in Appendix X1. Any data sheet can be used, provided the form contains all the required data.

11. Calculation

11.1 Calculate the water content of the material as follows:

$$w = [(M_{cms} - M_{cds})/(M_{cds} - M_c)] \times 100 = (M_w/M_s) \times 100 \quad (1)$$

where:

w = water content, %,
M_{cms} = mass of container and moist specimen, g,
M_{cds} = mass of container and oven dry specimen, g,
M_c = mass of container, g,
M_w = mass of water ($M_w = M_{cms} - M_{cds}$), g, and
M_s = mass of oven dry specimen ($M_s = M_{cds} - M_c$), g.

12. Report: Test Data Form/Sheet

12.1 The method used to specify how data are recorded on the test data sheets or forms, as given below, is the industry standard, and are representative of the significant digits that should be retained. These requirements do not consider in situ material variation, use of the data, special purpose studies, or any considerations for the user's objectives. It is common practice to increase or reduce significant digits of reported data commensurate with these considerations. It is beyond the scope of the standard to consider significant digits used in analysis method for engineering design.

12.1.1 Test data forms or test data sheets shall include the following:

12.1.2 Identification of the sample (material) being tested, such as boring number, sample number, test number, container number etc.

12.1.3 Water content of the specimen to the nearest 1 % for Method A or 0.1 % for Method B, as appropriate based on the minimum mass of the specimen. If this method is used in concert with another method, the water content of the specimen should be reported to the value required by the test method for which the water content is being determined. Refer to Practice D 6026 for guidance concerning significant digits, especially if the value obtained from this test method is to be used to calculate other relationships such as unit weight or density. For instance, if it is desired to express dry unit weight to the nearest 0.1 lbf/f^3 (0.02 kN/m^3), it may be necessary to use a balance with a greater readability or use a larger specimen mass to obtain the required significant digits the mass of water so that the water content can be determined to the required significant digits. Also, the significant digits in Practice D 6026 may need to be increased when calculating phase relationships requiring four significant digits.

12.1.4 Indicate if test specimen had a mass less than the minimum indicated in 8.2.

12.1.5 Indicate if test specimen contained more than one material type (layered, etc.).

12.1.6 Indicate the drying temperature if different from 110 ± 5°C.

12.1.7 Indicate if any material (size and amount) was excluded from the test specimen.

12.2 When reporting water content in tables, figures, etc., any data not meeting the requirements of this test method shall be noted, such as not meeting the mass, balance, or temperature requirements or a portion of the material is excluded from the test specimen.

13. Precision and Bias

13.1 *Statements on Precision*[5]:

13.1.1 *Precision*—Test data on precision is not presented due to the nature of the soil or rock materials tested by this test method. It is either not feasible or too costly at this time to have ten or more laboratories participate in a round-robin testing program. Any variation observed in the data is just as likely to be due to specimen variation as to operator or laboratory testing variation.

13.1.2 Subcommittee D18 is seeking any data from the users of this test method that might be used to make a limited statement on precision.

13.1.3 *Bias*—There is no accepted reference value for this test method, therefore, bias cannot be determined.

14. Keywords

14.1 aggregate; consistency; index property; laboratory; moisture analysis; moisture content; soil; water content

[5] Supporting data have been filed at ASTM International Headquarters and may be obtained by requesting Research Report RR: D13–1108.

APPENDIX

(Nonmandatory Information)

X1. WATER CONTENT OF SOIL AND ROCK SAMPLE DATA SHEET

Project Name: _____ Project Number: _____

Test Method: X Method A
_____ Method B

Laboratory Number	04-725-S	04-726-S	04-727-S		
Boring Number	B-1	B-2	B-2		
Field Number	SPT-1	SPT-2	SPT-2a		
Container / Lid Number	725	726	727		
Container Mass, g M_c	770.1	731.7	770.6		
Container+Moist Specimen Mass, g M_{cms}	1895.3	2008.4	1827.9		
Date / Time In Oven	8/20/2004 0700	8/20/2004 0700	8/20/2004 0700		
Initial Container+Oven Dry Specimen Mass, g	1721.4	1872.1	1707.6		
Date / Time Out of Oven	8/20/2004 1200	8/20/2004 1200	8/20/2004 1200		
Secondary Container+Oven Dry Specimen Mass, g	1721.4	1801.2	1660.8		
Date / Time Out of Oven	--	8/20/2004 1600	8/20/2004 1600		
Final Container+Oven Dry Specimen Mass, g, M_{cds}	1721.4	1801.2	1660.8		
Date / Time Out of Oven	--	8/21/2004 0700	8/21/2004 0700		
Mass of Water, g, $M_w = M_{cms} - M_{cds}$	173.9	207.2	167.1		
Mass of Solids, g, $M_s = M_{cds} - M_c$	951.3	1069.5	890.2		
Water Content, %, $w = (M_w/M_s) \times 100$	18	19	19		
Unified Soil Classification Group Symbol (Visual)	GC	GC	GC		
Bold Approximate Maximimum Grain Size (Visual)	3 in., 1½ in., **¾ in.**, ⅜ in., #4, #10, < #10	3 in., 1½ in., **¾ in.**, ⅜ in., #4, #10, < #10	3 in., 1½ in., **¾ in.**, ⅜ in., #4, #10, < #10	3 in., 1½ in., ¾ in., ⅜ in., #4, #10, < #10	3 in., 1½ in., ¾ in., ⅜ in., #4, #10, < #10
Oven Temperature if Other Than 110°C	—	—	—		

Remarks: _____

Tested By: _____ Date: _____ Checked By: _____

Dry Mass By: _____ Date: _____ Spot Checked: _____

Calculated By: _____ Date: _____ Reviewed By: _____

SUMMARY OF CHANGES

In accordance with Committee D18 policy, this section identifies the location of changes to this standard since the last edition (D 2216 – 98) that may impact the use of this standard.

(*1*) Footnote 2 was replaced with reference to Test Method D 4542. Subsequent footnotes were renumbered where necessary for sequential identification.
(*2*) Two new ASTM referenced documents were included in 1.6 to inform the user that less time-consuming processes are available.
(*3*) A new 1.7 was added to establish that two test methods (Method A and Method B) are provided in this standard. Subsequent Sections were renumbered where necessary for sequential identification.
(*4*) A new 1.9 was added to clarify the use of SI units as standard, and to conform to D18 Standards Preparation Manual Section 4.3.3. Subsequent Sections were renumbered where necessary for sequential identification.
(*5*) A new 1.10 was added as an information reference to Practice D 6026, and to conform to D18 Standards Preparation Manual Section 4.3.6. Subsequent Sections were renumbered where necessary for sequential identification.
(*6*) Five new ASTM referenced documents were added to, and one existing ASTM referenced document was deleted from section 2.1.
(*7*) Section 3.2 was renamed "Definitions of Terms."
(*8*) In section 3.2.1 the term "water content by mass" was redefined to correspond with its current definition in Terminology D 653.
(*9*) Section 3.3 "Definitions of Terms Specific to This Standard" was added.
(*10*) Section 3.3.1 was added, the term "constant dry mass" was defined to correspond with C 566, section 7.4.
(*11*) A new Note 2, referencing Practice D 3740, was added to Section 5 to conform to D18 Standards Preparation Manual section 4.3.5. Subsequent Notes were renumbered where necessary for sequential identification.
(*12*) Section 7.1 was revised to clarify the differences between the preservation and transportation of soil and rock samples.
(*13*) An information reference to Practice D 5079 was included in 7.1.
(*14*) Section 8.2 was revised, and Table 1 added to clarify specimen mass and balance readability requirements for Method A and Method B.
(*15*) Section 9.2.1 was revised to improve clarity.
(*16*) Section 10.4.1 was added incorporating former Note 7 as required text. This was revised to provide the user with guidelines for rapidly determining possible specimen dryness.
(*17*) Section 10.4.2 was added incorporating former Note 8 as required text.
(*18*) Section 10.5.1 was added incorporating former Note 9 as required text. It was edited to improve clarity, and to conform to section 10.5.
(*19*) Section 10.6 was added to indicate the addition of Appendix X1.
(*20*) The radical M_{cs} in Eq 1, and in the Eq 1 nomenclature legend was revised to M_{cds} to be consistent with the nomenclature used in the equations for calculating the values M_w and M_s.
(*21*) Section 12.1 was revised to follow the style and approach of ASTM D 854.
(*22*) Sections 13.1.1, 13.1.2 and 13.1.3 were revised to conform to D18 Standards Preparation Manual Table 3, Section 11.
(*23*) Appendix X1 (Water Content of Soil and Rock Sample Data Sheet) was added to conform to D18 Standards Preparation Manual 4.3.9.
(*24*) The Summary of Changes statement was updated to conform to D18 Standards Preparation Manual 9.9.1.

ASTM International takes no position respecting the validity of any patent rights asserted in connection with any item mentioned in this standard. Users of this standard are expressly advised that determination of the validity of any such patent rights, and the risk of infringement of such rights, are entirely their own responsibility.

This standard is subject to revision at any time by the responsible technical committee and must be reviewed every five years and if not revised, either reapproved or withdrawn. Your comments are invited either for revision of this standard or for additional standards and should be addressed to ASTM International Headquarters. Your comments will receive careful consideration at a meeting of the responsible technical committee, which you may attend. If you feel that your comments have not received a fair hearing you should make your views known to the ASTM Committee on Standards, at the address shown below.

This standard is copyrighted by ASTM International, 100 Barr Harbor Drive, PO Box C700, West Conshohocken, PA 19428-2959, United States. Individual reprints (single or multiple copies) of this standard may be obtained by contacting ASTM at the above address or at 610-832-9585 (phone), 610-832-9555 (fax), or service@astm.org (e-mail); or through the ASTM website (www.astm.org).

ASTM D 422
STANDARD TEST METHOD FOR PARTICLE-SIZE ANALYSIS OF SOILS

Designation: D 422 – 63 (Reapproved 2007)

Standard Test Method for Particle-Size Analysis of Soils[1]

This standard is issued under the fixed designation D 422; the number immediately following the designation indicates the year of original adoption or, in the case of revision, the year of last revision. A number in parentheses indicates the year of last reapproval. A superscript epsilon (ϵ) indicates an editorial change since the last revision or reapproval.

1. Scope

1.1 This test method covers the quantitative determination of the distribution of particle sizes in soils. The distribution of particle sizes larger than 75 µm (retained on the No. 200 sieve) is determined by sieving, while the distribution of particle sizes smaller than 75 µm is determined by a sedimentation process, using a hydrometer to secure the necessary data (Note 1 and Note 2).

NOTE 1—Separation may be made on the No. 4 (4.75-mm), No. 40 (425-µm), or No. 200 (75-µm) sieve instead of the No. 10. For whatever sieve used, the size shall be indicated in the report.

NOTE 2—Two types of dispersion devices are provided: (*1*) a high-speed mechanical stirrer, and (*2*) air dispersion. Extensive investigations indicate that air-dispersion devices produce a more positive dispersion of plastic soils below the 20-µm size and appreciably less degradation on all sizes when used with sandy soils. Because of the definite advantages favoring air dispersion, its use is recommended. The results from the two types of devices differ in magnitude, depending upon soil type, leading to marked differences in particle size distribution, especially for sizes finer than 20 µm.

2. Referenced Documents

2.1 *ASTM Standards:* [2]

D 421 Practice for Dry Preparation of Soil Samples for Particle-Size Analysis and Determination of Soil Constants

E 11 Specification for Wire Cloth and Sieves for Testing Purposes

E 100 Specification for ASTM Hydrometers

2.2 *ASTM Adjuncts:*

Air-Jet Dispersion Cup for Grain-Size Analysis of Soil[3]

3. Apparatus

3.1 *Balances*—A balance sensitive to 0.01 g for weighing the material passing a No. 10 (2.00-mm) sieve, and a balance sensitive to 0.1 % of the mass of the sample to be weighed for weighing the material retained on a No. 10 sieve.

3.2 *Stirring Apparatus*—Either apparatus A or B may be used.

3.2.1 Apparatus A shall consist of a mechanically operated stirring device in which a suitably mounted electric motor turns a vertical shaft at a speed of not less than 10 000 rpm without load. The shaft shall be equipped with a replaceable stirring paddle made of metal, plastic, or hard rubber, as shown in Fig. 1. The shaft shall be of such length that the stirring paddle will operate not less than ¾ in. (19.0 mm) nor more than 1½ in. (38.1 mm) above the bottom of the dispersion cup. A special dispersion cup conforming to either of the designs shown in Fig. 2 shall be provided to hold the sample while it is being dispersed.

3.2.2 Apparatus B shall consist of an air-jet dispersion cup (See drawing[3]) (Note 3) conforming to the general details shown in Fig. 3 (Note 4 and Note 5).

NOTE 3—The amount of air required by an air-jet dispersion cup is of the order of 2 ft^3/min; some small air compressors are not capable of supplying sufficient air to operate a cup.

NOTE 4—Another air-type dispersion device, known as a dispersion tube, developed by Chu and Davidson at Iowa State College, has been shown to give results equivalent to those secured by the air-jet dispersion cups. When it is used, soaking of the sample can be done in the sedimentation cylinder, thus eliminating the need for transferring the slurry. When the air-dispersion tube is used, it shall be so indicated in the report.

NOTE 5—Water may condense in air lines when not in use. This water must be removed, either by using a water trap on the air line, or by blowing the water out of the line before using any of the air for dispersion purposes.

3.3 *Hydrometer*—An ASTM hydrometer, graduated to read in either specific gravity of the suspension or grams per litre of suspension, and conforming to the requirements for hydrometers 151H or 152H in Specifications E 100. Dimensions of both hydrometers are the same, the scale being the only item of difference.

[1] This test method is under the jurisdiction of ASTM Committee D18 on Soil and Rock and is the direct responsibility of Subcommittee D18.03 on Texture, Plasticity and Density Characteristics of Soils.

Current edition approved Oct. 15, 2007. Published October 2007. Originally approved in 1935. Last previous edition approved in 2002 as D 422 – 63 (2002)ϵ1.

[2] For referenced ASTM standards, visit the ASTM website, www.astm.org, or contact ASTM Customer Service at service@astm.org. For *Annual Book of ASTM Standards* volume information, refer to the standard's Document Summary page on the ASTM website.

[3] Available from ASTM International Headquarters. Order Adjunct No. ADJD0422.

Copyright © ASTM International, 100 Barr Harbor Drive, PO Box C700, West Conshohocken, PA 19428-2959, United States.

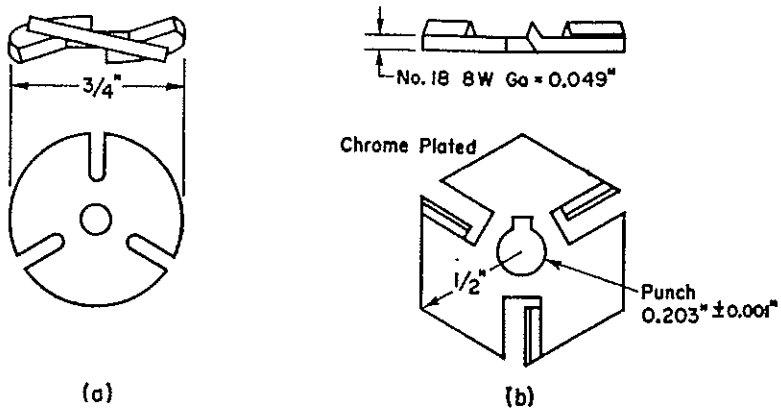

Metric Equivalents					
in.	0.001	0.049	0.203	½	¾
mm	0.03	1.24	5.16	12.7	19.0

FIG. 1 Detail of Stirring Paddles

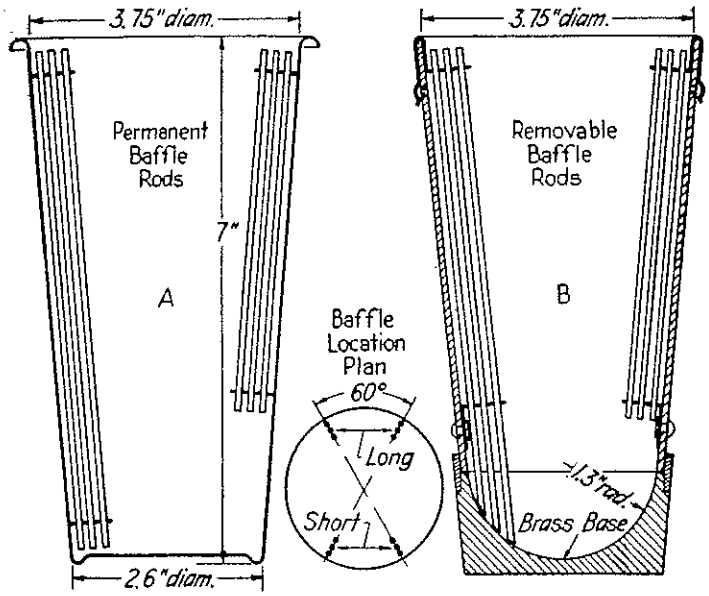

Metric Equivalents			
in.	1.3	2.6	3.75
mm	33	66	95.2

FIG. 2 Dispersion Cups of Apparatus

3.4 *Sedimentation Cylinder*—A glass cylinder essentially 18 in. (457 mm) in height and 2½ in. (63.5 mm) in diameter, and marked for a volume of 1000 mL. The inside diameter shall be such that the 1000-mL mark is 36 ± 2 cm from the bottom on the inside.

3.5 *Thermometer*—A thermometer accurate to 1°F (0.5°C).

3.6 *Sieves*—A series of sieves, of square-mesh woven-wire cloth, conforming to the requirements of Specification E 11. A full set of sieves includes the following (Note 6):

3-in. (75-mm)	No. 10 (2.00-mm)
2-in. (50-mm)	No. 20 (850-µm)
1½-in. (37.5-mm)	No. 40 (425-µm)
1-in. (25.0-mm)	No. 60 (250-µm)
¾-in. (19.0-mm)	No. 140 (106-µm)
⅜-in. (9.5-mm)	No. 200 (75-µm)
No. 4 (4.75-mm)	

NOTE 6—A set of sieves giving uniform spacing of points for the graph, as required in Section 17, may be used if desired. This set consists of the following sieves:

3-in. (75-mm)	No. 16 (1.18-mm)
1½-in. (37.5-mm)	No. 30 (600-µm)
¾-in. (19.0-mm)	No. 50 (300-µm)
⅜-in. (9.5-mm)	No. 100 (150-µm)
No. 4 (4.75-mm)	No. 200 (75-µm)
No. 8 (2.36-mm)	

3.7 *Water Bath or Constant-Temperature Room*—A water bath or constant-temperature room for maintaining the soil suspension at a constant temperature during the hydrometer analysis. A satisfactory water tank is an insulated tank that maintains the temperature of the suspension at a convenient constant temperature at or near 68°F (20°C). Such a device is illustrated in Fig. 4. In cases where the work is performed in a room at an automatically controlled constant temperature, the water bath is not necessary.

3.8 *Beaker*—A beaker of 250-mL capacity.

3.9 *Timing Device*—A watch or clock with a second hand.

4. Dispersing Agent

4.1 A solution of sodium hexametaphosphate (sometimes called sodium metaphosphate) shall be used in distilled or demineralized water, at the rate of 40 g of sodium hexametaphosphate/litre of solution (Note 7).

NOTE 7—Solutions of this salt, if acidic, slowly revert or hydrolyze back to the orthophosphate form with a resultant decrease in dispersive action. Solutions should be prepared frequently (at least once a month) or adjusted to pH of 8 or 9 by means of sodium carbonate. Bottles containing

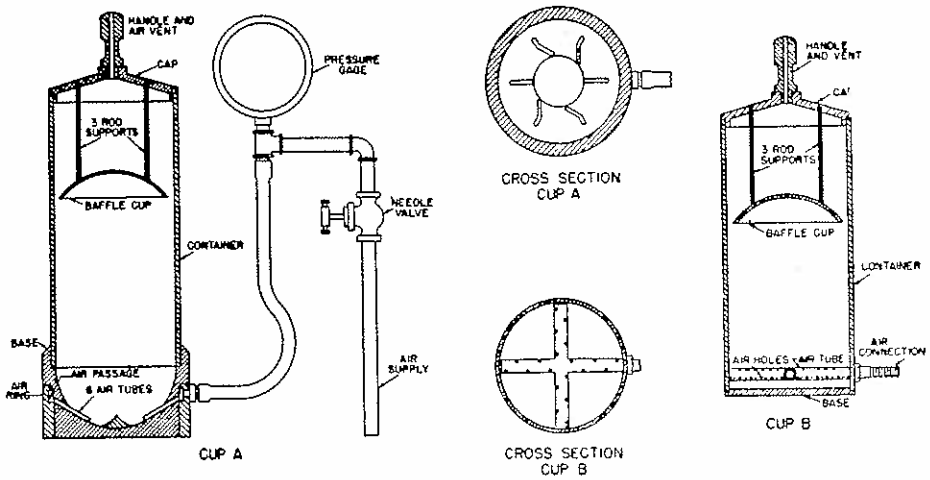

FIG. 3 Air-Jet Dispersion Cups of Apparatus B

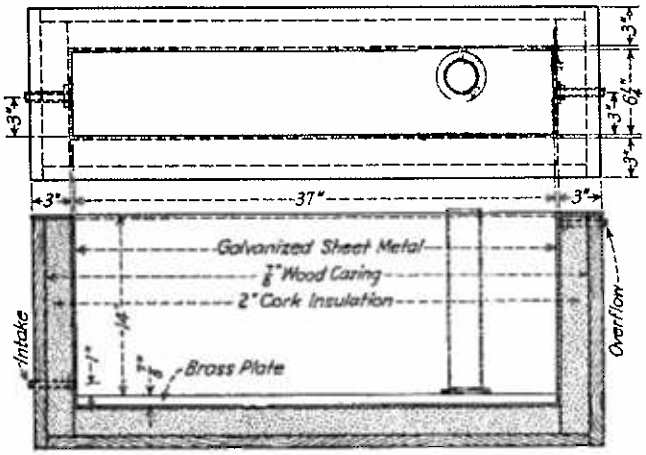

Metric Equivalents

in.	⅞	1	3	6¼	14	37
mm	22.2	25.4	76.2	158.2	356	940

FIG. 4 Insulated Water Bath

solutions should have the date of preparation marked on them.

4.2 All water used shall be either distilled or demineralized water. The water for a hydrometer test shall be brought to the temperature that is expected to prevail during the hydrometer test. For example, if the sedimentation cylinder is to be placed in the water bath, the distilled or demineralized water to be used shall be brought to the temperature of the controlled water bath; or, if the sedimentation cylinder is used in a room with controlled temperature, the water for the test shall be at the temperature of the room. The basic temperature for the hydrometer test is 68°F (20°C). Small variations of temperature do not introduce differences that are of practical significance and do not prevent the use of corrections derived as prescribed.

5. Test Sample

5.1 Prepare the test sample for mechanical analysis as outlined in Practice D 421. During the preparation procedure the sample is divided into two portions. One portion contains only particles retained on the No. 10 (2.00-mm) sieve while the other portion contains only particles passing the No. 10 sieve. The mass of air-dried soil selected for purpose of tests, as prescribed in Practice D 421, shall be sufficient to yield quantities for mechanical analysis as follows:

5.1.1 The size of the portion retained on the No. 10 sieve shall depend on the maximum size of particle, according to the following schedule:

Nominal Diameter of Largest Particles, in. (mm)	Approximate Minimum Mass of Portion, g
⅜ (9.5)	500
¾ (19.0)	1000
1 (25.4)	2000
1½ (38.1)	3000
2 (50.8)	4000
3 (76.2)	5000

5.1.2 The size of the portion passing the No. 10 sieve shall be approximately 115 g for sandy soils and approximately 65 g for silt and clay soils.

5.2 Provision is made in Section 5 of Practice D 421 for weighing of the air-dry soil selected for purpose of tests, the separation of the soil on the No. 10 sieve by dry-sieving and washing, and the weighing of the washed and dried fraction retained on the No. 10 sieve. From these two masses the percentages retained and passing the No. 10 sieve can be calculated in accordance with 12.1.

NOTE 8—A check on the mass values and the thoroughness of pulverization of the clods may be secured by weighing the portion passing the No. 10 sieve and adding this value to the mass of the washed and oven-dried portion retained on the No. 10 sieve.

SIEVE ANALYSIS OF PORTION RETAINED ON NO. 10 (2.00-mm) SIEVE

6. Procedure

6.1 Separate the portion retained on the No. 10 (2.00-mm) sieve into a series of fractions using the 3-in. (75-mm), 2-in. (50-mm), 1½-in. (37.5-mm), 1-in. (25.0-mm), ¾-in. (19.0-mm), ⅜-in. (9.5-mm), No. 4 (4.75-mm), and No. 10 sieves, or as many as may be needed depending on the sample, or upon the specifications for the material under test.

6.2 Conduct the sieving operation by means of a lateral and vertical motion of the sieve, accompanied by a jarring action in order to keep the sample moving continuously over the surface of the sieve. In no case turn or manipulate fragments in the sample through the sieve by hand. Continue sieving until not more than 1 mass % of the residue on a sieve passes that sieve during 1 min of sieving. When mechanical sieving is used, test the thoroughness of sieving by using the hand method of sieving as described above.

6.3 Determine the mass of each fraction on a balance conforming to the requirements of 3.1. At the end of weighing, the sum of the masses retained on all the sieves used should equal closely the original mass of the quantity sieved.

HYDROMETER AND SIEVE ANALYSIS OF PORTION PASSING THE NO. 10 (2.00-mm) SIEVE

7. Determination of Composite Correction for Hydrometer Reading

7.1 Equations for percentages of soil remaining in suspension, as given in 14.3, are based on the use of distilled or demineralized water. A dispersing agent is used in the water, however, and the specific gravity of the resulting liquid is appreciably greater than that of distilled or demineralized water.

7.1.1 Both soil hydrometers are calibrated at 68°F (20°C), and variations in temperature from this standard temperature produce inaccuracies in the actual hydrometer readings. The amount of the inaccuracy increases as the variation from the standard temperature increases.

7.1.2 Hydrometers are graduated by the manufacturer to be read at the bottom of the meniscus formed by the liquid on the stem. Since it is not possible to secure readings of soil suspensions at the bottom of the meniscus, readings must be taken at the top and a correction applied.

7.1.3 The net amount of the corrections for the three items enumerated is designated as the composite correction, and may be determined experimentally.

7.2 For convenience, a graph or table of composite corrections for a series of 1° temperature differences for the range of expected test temperatures may be prepared and used as needed. Measurement of the composite corrections may be made at two temperatures spanning the range of expected test temperatures, and corrections for the intermediate temperatures calculated assuming a straight-line relationship between the two observed values.

7.3 Prepare 1000 mL of liquid composed of distilled or demineralized water and dispersing agent in the same proportion as will prevail in the sedimentation (hydrometer) test. Place the liquid in a sedimentation cylinder and the cylinder in the constant-temperature water bath, set for one of the two temperatures to be used. When the temperature of the liquid becomes constant, insert the hydrometer, and, after a short interval to permit the hydrometer to come to the temperature of the liquid, read the hydrometer at the top of the meniscus formed on the stem. For hydrometer 151H the composite correction is the difference between this reading and one; for hydrometer 152H it is the difference between the reading and zero. Bring the liquid and the hydrometer to the other temperature to be used, and secure the composite correction as before.

8. Hygroscopic Moisture

8.1 When the sample is weighed for the hydrometer test, weigh out an auxiliary portion of from 10 to 15 g in a small metal or glass container, dry the sample to a constant mass in an oven at 230 ± 9°F (110 ± 5°C), and weigh again. Record the masses.

9. Dispersion of Soil Sample

9.1 When the soil is mostly of the clay and silt sizes, weigh out a sample of air-dry soil of approximately 50 g. When the soil is mostly sand the sample should be approximately 100 g.

9.2 Place the sample in the 250-mL beaker and cover with 125 mL of sodium hexametaphosphate solution (40 g/L). Stir until the soil is thoroughly wetted. Allow to soak for at least 16 h.

9.3 At the end of the soaking period, disperse the sample further, using either stirring apparatus A or B. If stirring apparatus A is used, transfer the soil-water slurry from the beaker into the special dispersion cup shown in Fig. 2, washing any residue from the beaker into the cup with distilled or demineralized water (Note 9). Add distilled or demineralized water, if necessary, so that the cup is more than half full. Stir for a period of 1 min.

NOTE 9—A large size syringe is a convenient device for handling the water in the washing operation. Other devices include the wash-water bottle and a hose with nozzle connected to a pressurized distilled water tank.

9.4 If stirring apparatus B (Fig. 3) is used, remove the cover cap and connect the cup to a compressed air supply by means of a rubber hose. A air gage must be on the line between the cup and the control valve. Open the control valve so that the gage indicates 1 psi (7 kPa) pressure (Note 10). Transfer the

soil-water slurry from the beaker to the air-jet dispersion cup by washing with distilled or demineralized water. Add distilled or demineralized water, if necessary, so that the total volume in the cup is 250 mL, but no more.

NOTE 10—The initial air pressure of 1 psi is required to prevent the soil-water mixture from entering the air-jet chamber when the mixture is transferred to the dispersion cup.

9.5 Place the cover cap on the cup and open the air control valve until the gage pressure is 20 psi (140 kPa). Disperse the soil according to the following schedule:

Plasticity Index	Dispersion Period, min
Under 5	5
6 to 20	10
Over 20	15

Soils containing large percentages of mica need be dispersed for only 1 min. After the dispersion period, reduce the gage pressure to 1 psi preparatory to transfer of soil-water slurry to the sedimentation cylinder.

10. Hydrometer Test

10.1 Immediately after dispersion, transfer the soil-water slurry to the glass sedimentation cylinder, and add distilled or demineralized water until the total volume is 1000 mL.

10.2 Using the palm of the hand over the open end of the cylinder (or a rubber stopper in the open end), turn the cylinder upside down and back for a period of 1 min to complete the agitation of the slurry (Note 11). At the end of 1 min set the cylinder in a convenient location and take hydrometer readings at the following intervals of time (measured from the beginning of sedimentation), or as many as may be needed, depending on the sample or the specification for the material under test: 2, 5, 15, 30, 60, 250, and 1440 min. If the controlled water bath is used, the sedimentation cylinder should be placed in the bath between the 2- and 5-min readings.

NOTE 11—The number of turns during this minute should be approximately 60, counting the turn upside down and back as two turns. Any soil remaining in the bottom of the cylinder during the first few turns should be loosened by vigorous shaking of the cylinder while it is in the inverted position.

10.3 When it is desired to take a hydrometer reading, carefully insert the hydrometer about 20 to 25 s before the reading is due to approximately the depth it will have when the reading is taken. As soon as the reading is taken, carefully remove the hydrometer and place it with a spinning motion in a graduate of clean distilled or demineralized water.

NOTE 12—It is important to remove the hydrometer immediately after each reading. Readings shall be taken at the top of the meniscus formed by the suspension around the stem, since it is not possible to secure readings at the bottom of the meniscus.

10.4 After each reading, take the temperature of the suspension by inserting the thermometer into the suspension.

11. Sieve Analysis

11.1 After taking the final hydrometer reading, transfer the suspension to a No. 200 (75-μm) sieve and wash with tap water until the wash water is clear. Transfer the material on the No. 200 sieve to a suitable container, dry in an oven at 230 ± 9°F (110 ± 5°C) and make a sieve analysis of the portion retained, using as many sieves as desired, or required for the material, or upon the specification of the material under test.

CALCULATIONS AND REPORT

12. Sieve Analysis Values for the Portion Coarser than the No. 10 (2.00-mm) Sieve

12.1 Calculate the percentage passing the No. 10 sieve by dividing the mass passing the No. 10 sieve by the mass of soil originally split on the No. 10 sieve, and multiplying the result by 100. To obtain the mass passing the No. 10 sieve, subtract the mass retained on the No. 10 sieve from the original mass.

12.2 To secure the total mass of soil passing the No. 4 (4.75-mm) sieve, add to the mass of the material passing the No. 10 sieve the mass of the fraction passing the No. 4 sieve and retained on the No. 10 sieve. To secure the total mass of soil passing the ⅜-in. (9.5-mm) sieve, add to the total mass of soil passing the No. 4 sieve, the mass of the fraction passing the ⅜-in. sieve and retained on the No. 4 sieve. For the remaining sieves, continue the calculations in the same manner.

12.3 To determine the total percentage passing for each sieve, divide the total mass passing (see 12.2) by the total mass of sample and multiply the result by 100.

13. Hygroscopic Moisture Correction Factor

13.1 The hydroscopic moisture correction factor is the ratio between the mass of the oven-dried sample and the air-dry mass before drying. It is a number less than one, except when there is no hygroscopic moisture.

14. Percentages of Soil in Suspension

14.1 Calculate the oven-dry mass of soil used in the hydrometer analysis by multiplying the air-dry mass by the hygroscopic moisture correction factor.

14.2 Calculate the mass of a total sample represented by the mass of soil used in the hydrometer test, by dividing the oven-dry mass used by the percentage passing the No. 10 (2.00-mm) sieve, and multiplying the result by 100. This value is the weight W in the equation for percentage remaining in suspension.

14.3 The percentage of soil remaining in suspension at the level at which the hydrometer is measuring the density of the suspension may be calculated as follows (Note 13): For hydrometer 151H:

$$P = [(100\,000/W) \times G/(G - G_1)](R - G_1) \quad (1)$$

NOTE 13—The bracketed portion of the equation for hydrometer 151H is constant for a series of readings and may be calculated first and then multiplied by the portion in the parentheses.

For hydrometer 152H:

$$P = (Ra/W) \times 100 \quad (2)$$

where:

a = correction faction to be applied to the reading of hydrometer 152H. (Values shown on the scale are computed using a specific gravity of 2.65. Correction factors are given in Table 1),

P = percentage of soil remaining in suspension at the level at which the hydrometer measures the density of the suspension,
R = hydrometer reading with composite correction applied (Section 7),
W = oven-dry mass of soil in a total test sample represented by mass of soil dispersed (see 14.2), g,
G = specific gravity of the soil particles, and
G_1 = specific gravity of the liquid in which soil particles are suspended. Use numerical value of one in both instances in the equation. In the first instance any possible variation produces no significant effect, and in the second instance, the composite correction for R is based on a value of one for G_1.

15. Diameter of Soil Particles

15.1 The diameter of a particle corresponding to the percentage indicated by a given hydrometer reading shall be calculated according to Stokes' law (Note 14), on the basis that a particle of this diameter was at the surface of the suspension at the beginning of sedimentation and had settled to the level at which the hydrometer is measuring the density of the suspension. According to Stokes' law: see Table 2

$$D = \sqrt{[30n/980(G - G_1)] \times L/T} \quad (3)$$

where:
D = diameter of particle, mm,
n = coefficient of viscosity of the suspending medium (in this case water) in poises (varies with changes in temperature of the suspending medium),
L = distance from the surface of the suspension to the level at which the density of the suspension is being measured, cm. (For a given hydrometer and sedimentation cylinder, values vary according to the hydrometer readings. This distance is known as effective depth (see Table 2)),
T = interval of time from beginning of sedimentation to the taking of the reading, min,
G = specific gravity of soil particles, and
G_1 = specific gravity (relative density) of suspending medium (value may be used as 1.000 for all practical purposes).

TABLE 1 Values of Correction Factor, α, for Different Specific Gravities of Soil Particles[A]

Specific Gravity	Correction Factor[A]
2.95	0.94
2.90	0.95
2.85	0.96
2.80	0.97
2.75	0.98
2.70	0.99
2.65	1.00
2.60	1.01
2.55	1.02
2.50	1.03
2.45	1.05

[A] For use in equation for percentage of soil remaining in suspension when using Hydrometer 152H.

TABLE 2 Values of Effective Depth Based on Hydrometer and Sedimentation Cylinder of Specified Sizes[A]

Hydrometer 151H		Hydrometer 152H			
Actual Hydrometer Reading	Effective Depth, L, cm	Actual Hydrometer Reading	Effective Depth, L, cm	Actual Hydrometer Reading	Effective Depth, L, cm
1.000	16.3	0	16.3	31	11.2
1.001	16.0	1	16.1	32	11.1
1.002	15.8	2	16.0	33	10.9
1.003	15.5	3	15.8	34	10.7
1.004	15.2	4	15.6	35	10.6
1.005	15.0	5	15.5		
1.006	14.7	6	15.3	36	10.4
1.007	14.4	7	15.2	37	10.2
1.008	14.2	8	15.0	38	10.1
1.009	13.9	9	14.8	39	9.9
1.010	13.7	10	14.7	40	9.7
1.011	13.4	11	14.5	41	9.6
1.012	13.1	12	14.3	42	9.4
1.013	12.9	13	14.2	43	9.2
1.014	12.6	14	14.0	44	9.1
1.015	12.3	15	13.8	45	8.9
1.016	12.1	16	13.7	46	8.8
1.017	11.8	17	13.5	47	8.6
1.018	11.5	18	13.3	48	8.4
1.019	11.3	19	13.2	49	8.3
1.020	11.0	20	13.0	50	8.1
1.021	10.7	21	12.9	51	7.9
1.022	10.5	22	12.7	52	7.8
1.023	10.2	23	12.5	53	7.6
1.024	10.0	24	12.4	54	7.4
1.025	9.7	25	12.2	55	7.3
1.026	9.4	26	12.0	56	7.1
1.027	9.2	27	11.9	57	7.0
1.028	8.9	28	11.7	58	6.8
1.029	8.6	29	11.5	59	6.6
1.030	8.4	30	11.4	60	6.5
1.031	8.1				
1.032	7.8				
1.033	7.6				
1.034	7.3				
1.035	7.0				
1.036	6.8				
1.037	6.5				
1.038	6.2				

[A] Values of effective depth are calculated from the equation:

$$L = L_1 + 1/2\,[L_2 - (V_B/A)] \quad (5)$$

where:
L = effective depth, cm,
L_1 = distance along the stem of the hydrometer from the top of the bulb to the mark for a hydrometer reading, cm,
L_2 = overall length of the hydrometer bulb, cm,
V_B = volume of hydrometer bulb, cm^3, and
A = cross-sectional area of sedimentation cylinder, cm^2

Values used in calculating the values in Table 2 are as follows:
For both hydrometers, 151H and 152H:
L_2 = 14.0 cm
V_B = 67.0 cm^3
A = 27.8 cm^2

For hydrometer 151H:
L_1 = 10.5 cm for a reading of 1.000
= 2.3 cm for a reading of 1.031

For hydrometer 152H:
L_1 = 10.5 cm for a reading of 0 g/litre
= 2.3 cm for a reading of 50 g/litre

NOTE 14—Since Stokes' law considers the terminal velocity of a single sphere falling in an infinity of liquid, the sizes calculated represent the

diameter of spheres that would fall at the same rate as the soil particles.

15.2 For convenience in calculations the above equation may be written as follows: see Table 3

$$D = K\sqrt{L/T} \quad (4)$$

where:

K = constant depending on the temperature of the suspension and the specific gravity of the soil particles. Values of K for a range of temperatures and specific gravities are given in Table 3. The value of K does not change for a series of readings constituting a test, while values of L and T do vary.

15.3 Values of D may be computed with sufficient accuracy, using an ordinary 10-in. slide rule.

NOTE 15—The value of L is divided by T using the A- and B-scales, the square root being indicated on the D-scale. Without ascertaining the value of the square root it may be multiplied by K, using either the C- or CI-scale.

16. Sieve Analysis Values for Portion Finer than No. 10 (2.00-mm) Sieve

16.1 Calculation of percentages passing the various sieves used in sieving the portion of the sample from the hydrometer test involves several steps. The first step is to calculate the mass of the fraction that would have been retained on the No. 10 sieve had it not been removed. This mass is equal to the total percentage retained on the No. 10 sieve (100 minus total percentage passing) times the mass of the total sample represented by the mass of soil used (as calculated in 14.2), and the result divided by 100.

16.2 Calculate next the total mass passing the No. 200 sieve. Add together the fractional masses retained on all the sieves, including the No. 10 sieve, and subtract this sum from the mass of the total sample (as calculated in 14.2).

16.3 Calculate next the total masses passing each of the other sieves, in a manner similar to that given in 12.2.

16.4 Calculate last the total percentages passing by dividing the total mass passing (as calculated in 16.3) by the total mass of sample (as calculated in 14.2), and multiply the result by 100.

17. Graph

17.1 When the hydrometer analysis is performed, a graph of the test results shall be made, plotting the diameters of the particles on a logarithmic scale as the abscissa and the percentages smaller than the corresponding diameters to an arithmetic scale as the ordinate. When the hydrometer analysis is not made on a portion of the soil, the preparation of the graph is optional, since values may be secured directly from tabulated data.

18. Report

18.1 The report shall include the following:

18.1.1 Maximum size of particles,

18.1.2 Percentage passing (or retained on) each sieve, which may be tabulated or presented by plotting on a graph (Note 16),

18.1.3 Description of sand and gravel particles:

18.1.3.1 Shape—rounded or angular,

18.1.3.2 Hardness—hard and durable, soft, or weathered and friable,

18.1.4 Specific gravity, if unusually high or low,

18.1.5 Any difficulty in dispersing the fraction passing the No. 10 (2.00-mm) sieve, indicating any change in type and amount of dispersing agent, and

18.1.6 The dispersion device used and the length of the dispersion period.

NOTE 16—This tabulation of graph represents the gradation of the sample tested. If particles larger than those contained in the sample were removed before testing, the report shall so state giving the amount and maximum size.

18.2 For materials tested for compliance with definite specifications, the fractions called for in such specifications shall be reported. The fractions smaller than the No. 10 sieve shall be read from the graph.

18.3 For materials for which compliance with definite specifications is not indicated and when the soil is composed almost entirely of particles passing the No. 4 (4.75-mm) sieve, the results read from the graph may be reported as follows:

(1) Gravel, passing 3-in. and retained on No. 4 sieve ....
(2) Sand, passing No. 4 sieve and retained on No. 200 sieve ....
  (a) Coarse sand, passing No. 4 sieve and retained on No. 10 sieve ....
  (b) Medium sand, passing No. 10 sieve and retained on No. 40 sieve .....

TABLE 3 Values of K for Use in Equation for Computing Diameter of Particle in Hydrometer Analysis

Temperature,° C	Specific Gravity of Soil Particles								
	2.45	2.50	2.55	2.60	2.65	2.70	2.75	2.80	2.85
16	0.01530	0.01505	0.01481	0.01457	0.01435	0.01414	0.01394	0.01374	0.01356
17	0.01511	0.01486	0.01462	0.01439	0.01417	0.01396	0.01376	0.01356	0.01338
18	0.01492	0.01467	0.01443	0.01421	0.01399	0.01378	0.01359	0.01339	0.01321
19	0.01474	0.01449	0.01425.	0.01403	0.01382	0.01361	0.01342	0.1323	0.01305
20	0.01456	0.01431	0.01408	0.01386	0.01365	0.01344	0.01325	0.01307	0.01289
21	0.01438	0.01414	0.01391	0.01369	0.01348	0.01328	0.01309	0.01291	0.01273
22	0.01421	0.01397	0.01374	0.01353	0.01332	0.01312	0.01294	0.01276	0.01258
23	0.01404	0.01381	0.01358	0.01337	0.01317	0.01297	0.01279	0.01261	0.01243
24	0.01388	0.01365	0.01342	0.01321	0.01301	0.01282	0.01264	0.01246	0.01229
25	0.01372	0.01349	0.01327	0.01306	0.01286	0.01267	0.01249	0.01232	0.01215
26	0.01357	0.01334	0.01312	0.01291	0.01272	0.01253	0.01235	0.01218	0.01201
27	0.01342	0.01319	0.01297	0.01277	0.01258	0.01239	0.01221	0.01204	0.01188
28	0.01327	0.01304	0.01283	0.01264	0.01244	0.01255	0.01208	0.01191	0.01175
29	0.01312	0.01290	0.01269	0.01249	0.01230	0.01212	0.01195	0.01178	0.01162
30	0.01298	0.01276	0.01256	0.01236	0.01217	0.01199	0.01182	0.01165	0.01149

(c) Fine sand, passing No. 40 sieve and retained on No. 200 sieve ..... %
(3) Silt size, 0.074 to 0.005 mm ..... %
(4) Clay size, smaller than 0.005 mm ..... %
Colloids, smaller than 0.001 mm ..... %

18.4 For materials for which compliance with definite specifications is not indicated and when the soil contains material retained on the No. 4 sieve sufficient to require a sieve analysis on that portion, the results may be reported as follows (Note 17):

SIEVE ANALYSIS

Sieve Size	Percentage Passing
3-in.	.....
2-in.	.....
1½-in.	.....
1-in.	.....
¾-in.	.....
⅜-in.	.....
No. 4 (4.75-mm)	.....
No. 10 (2.00-mm)	.....
No. 40 (425-µm)	.....
No. 200 (75-µm)	.....

HYDROMETER ANALYSIS

0.074 mm	.....
0.005 mm	.....
0.001 mm	.....

NOTE 17—No. 8 (2.36-mm) and No. 50 (300-µm) sieves may be substituted for No. 10 and No. 40 sieves.

19. Keywords

19.1 grain-size; hydrometer analysis; hygroscopic moisture; particle-size; sieve analysis

ASTM International takes no position respecting the validity of any patent rights asserted in connection with any item mentioned in this standard. Users of this standard are expressly advised that determination of the validity of any such patent rights, and the risk of infringement of such rights, are entirely their own responsibility.

This standard is subject to revision at any time by the responsible technical committee and must be reviewed every five years and if not revised, either reapproved or withdrawn. Your comments are invited either for revision of this standard or for additional standards and should be addressed to ASTM International Headquarters. Your comments will receive careful consideration at a meeting of the responsible technical committee, which you may attend. If you feel that your comments have not received a fair hearing you should make your views known to the ASTM Committee on Standards, at the address shown below.

This standard is copyrighted by ASTM International, 100 Barr Harbor Drive, PO Box C700, West Conshohocken, PA 19428-2959, United States. Individual reprints (single or multiple copies) of this standard may be obtained by contacting ASTM at the above address or at 610-832-9585 (phone), 610-832-9555 (fax), or service@astm.org (e-mail); or through the ASTM website (www.astm.org).

ASTM D 4318
STANDARD TEST METHODS FOR LIQUID LIMIT, PLASTIC LIMIT, AND PLASTICITY INDEX OF SOILS

Designation: D 4318 – 05

Standard Test Methods for Liquid Limit, Plastic Limit, and Plasticity Index of Soils[1]

This standard is issued under the fixed designation D 4318; the number immediately following the designation indicates the year of original adoption or, in the case of revision, the year of last revision. A number in parentheses indicates the year of last reapproval. A superscript epsilon (ϵ) indicates an editorial change since the last revision or reapproval.

This standard has been approved for use by agencies of the Department of Defense.

1. Scope*

1.1 These test methods cover the determination of the liquid limit, plastic limit, and the plasticity index of soils as defined in Section 3 on Terminology.

1.2 Two methods for preparing test specimens are provided as follows: *Wet preparation method,* as described in 10.1. *Dry preparation method,* as described in 10.2. The method to be used shall be specified by the requesting authority. If no method is specified, use the wet preparation method.

1.2.1 The liquid and plastic limits of many soils that have been allowed to dry before testing may be considerably different from values obtained on non-dried samples. If the liquid and plastic limits of soils are used to correlate or estimate the engineering behavior of soils in their natural moist state, samples should not be permitted to dry before testing unless data on dried samples are specifically desired.

1.3 Two methods for determining the liquid limit are provided as follows: *Method A,* Multipoint test as described in Sections 11 and 12. *Method B,* One-point test as described in Sections 13 and 14. The method to be used shall be specified by the requesting authority. If no method is specified, use Method A.

1.3.1 The multipoint liquid limit method is generally more precise than the one-point method. It is recommended that the multipoint method be used in cases where test results may be subject to dispute, or where greater precision is required.

1.3.2 Because the one-point method requires the operator to judge when the test specimen is approximately at its liquid limit, it is particularly not recommended for use by inexperienced operators.

1.3.3 The correlation on which the calculations of the one-point method are based may not be valid for certain soils, such as organic soils or soils from a marine environment. It is strongly recommended that the liquid limit of these soils be determined by the multipoint method.

1.4 The plastic limit test is performed on material prepared for the liquid limit test.

1.5 The liquid limit and plastic limit of soils (along with the shrinkage limit) are often collectively referred to as the Atterberg limits. These limits distinguished the boundaries of the several consistency states of plastic soils.

1.6 The composition and concentration of soluble salts in a soil affect the values of the liquid and plastic limits as well as the water content values of soils (see Method D 2216). Special consideration should therefore be given to soils from a marine environment or other sources where high soluble salt concentrations may be present. The degree to which the salts present in these soils are diluted or concentrated must be given careful consideration.

1.7 The methods described herein are performed only on that portion of a soil that passes the 425-μm (No. 40) sieve. Therefore, the relative contribution of this portion of the soil to the properties of the sample as a whole must be considered when using these tests to evaluate properties of a soil.

1.8 The values stated in acceptable metric units are to be regarded as the standard, except as noted below. The values given in parentheses are for information only.

1.8.1 The standard units for the resilience tester covered in Annex A1 are inch-pound, not metric. The metric values given are for information only.

1.9 *This standard does not purport to address all of the safety concerns, if any, associated with its use. It is the responsibility of the user of this standard to establish appropriate safety and health practices and determine the applicability of regulatory limitations prior to use.*

2. Referenced Documents

2.1 *ASTM Standards:* [2]

C 702 Practice for Reducing Field Samples of Aggregate to Testing Size

D 75 Practice for Sampling Aggregates

D 420 Guide to Site Characterization for Engineering, Design, and Construction Purposes

D 653 Terminology Relating to Soil, Rock, and Contained Fluids

[1] This standard is under the jurisdiction of ASTM Committee D18 on Soil and Rock and is the direct responsibility of Subcommittee D18.03 on Texture, Plasticity and Density Characteristics of Soils.

Current edition approved March 1, 2005. Published April 2005. Originally approved in 1983. Last previous edition approved in 2000 as D 4318 – 00.

[2] For referenced ASTM standards, visit the ASTM website, www.astm.org, or contact ASTM Customer Service at service@astm.org. For *Annual Book of ASTM Standards* volume information, refer to the standard's Document Summary page on the ASTM website.

***A Summary of Changes section appears at the end of this standard.**

Copyright © ASTM International, 100 Barr Harbor Drive, PO Box C700, West Conshohocken, PA 19428-2959, United States.

D 1241 Specification for Materials for Soil-Aggregate Subbase, Base, and Surface Courses
D 2216 Test Method for Laboratory Determination of Water (Moisture) Content of Soil and Rock by Mass
D 2487 Practice for Classification of Soils for Engineering Purposes (Unified Soil Classification System)
D 3282 Practice for Classification of Soils and Soil-Aggregate Mixtures for Highway Construction Purposes
D 3740 Practice for Minimum Requirements for Agencies Engaged in the Testing and/or Inspection of Soil and Rock as Used in Engineering Design and Construction
D 4753 Specification for Evaluating, Selecting, and Specifying Balances and Scales for Use in Soil, Rock, and Related Construction Materials Testing
D 6026 Practice for Using Significant Digits in Geotechnical Data
E 11 Specification for Wire-Cloth Sieves for Testing Purposes
E 177 Practice for Use of the Terms Precision and Bias in ASTM Test Methods
E 691 Practice for Conducting an Interlaboratory Study to Determine the Precision of a Test Method

3. Terminology

3.1 *Definitions:*

3.1.1 For common definitions of terms in this standard, refer to Terminology D 653.

3.1.2 *Atterberg Limits*—Originally, six "limits of consistency" of fine-grained soils were defined by Albert Atterberg: the upper limit of viscous flow, the liquid limit, the sticky limit, the cohesion limit, the plastic limit, and the shrinkage limit. In current engineering usage, the term usually refers only to the liquid limit, plastic limit, and in some references, the shrinkage limit.

3.1.3 *consistency*—the relative ease with which a soil can be deformed.

3.1.4 *liquid limit (LL, w_L)*—the water content, in percent, of a soil at the arbitrarily defined boundary between the semi-liquid and plastic states.

3.1.4.1 *Discussion*—The undrained shear strength of soil at the liquid limit is considered to be approximately 2 kPa (0.28 psi).

3.1.5 *plastic limit (PL, w_p)*—the water content, in percent, of a soil at the boundary between the plastic and semi-solid states.

3.1.6 *plastic soil*—a soil which has a range of water content over which it exhibits plasticity and which will retain its shape on drying.

3.1.7 *plasticity index (PI)*—the range of water content over which a soil behaves plastically. Numerically, it is the difference between the liquid limit and the plastic limit.

3.1.8 *liquidity index*—the ratio, expressed as a percentage of (1) the water content of a soil minus its plastic limit, to (2) its plasticity index.

3.1.9 *activity number (A)*—the ratio of (1) the plasticity index of a soil to (2) the percent by mass of particles having an equivalent diameter smaller than 2 μm.

4. Summary of Test Method

4.1 The specimen is processed to remove any material retained on a 425-μm (No. 40) sieve. The liquid limit is determined by performing trials in which a portion of the specimen is spread in a brass cup, divided in two by a grooving tool, and then allowed to flow together from the shocks caused by repeatedly dropping the cup in a standard mechanical device. The multipoint liquid limit, Method A, requires three or more trials over a range of water contents to be performed and the data from the trials plotted or calculated to make a relationship from which the liquid limit is determined. The one-point liquid limit, Method B, uses the data from two trials at one water content multiplied by a correction factor to determine the liquid limit.

4.2 The plastic limit is determined by alternately pressing together and rolling into a 3.2-mm (⅛-in.) diameter thread a small portion of plastic soil until its water content is reduced to a point at which the thread crumbles and can no longer be pressed together and re-rolled. The water content of the soil at this point is reported as the plastic limit.

4.3 The plasticity index is calculated as the difference between the liquid limit and the plastic limit.

5. Significance and Use

5.1 These test methods are used as an integral part of several engineering classification systems to characterize the fine-grained fractions of soils (see Practices D 2487 and D 3282) and to specify the fine-grained fraction of construction materials (see Specification D 1241). The liquid limit, plastic limit, and plasticity index of soils are also used extensively, either individually or together, with other soil properties to correlate with engineering behavior such as compressibility, hydraulic conductivity (permeability), compactibility, shrink-swell, and shear strength.

5.2 The liquid and plastic limits of a soil and its water content can be used to express its relative consistency or liquidity index. In addition, the plasticity index and the percentage finer than 2-μm particle size can be used to determine its activity number.

5.3 These methods are sometimes used to evaluate the weathering characteristics of clay-shale materials. When subjected to repeated wetting and drying cycles, the liquid limits of these materials tend to increase. The amount of increase is considered to be a measure of a shale's susceptibility to weathering.

5.4 The liquid limit of a soil containing substantial amounts of organic matter decreases dramatically when the soil is oven-dried before testing. Comparison of the liquid limit of a sample before and after oven-drying can therefore be used as a qualitative measure of organic matter content of a soil (see Practice D 2487).

NOTE 1—The quality of the result produced by this standard is dependent on the competence of the personnel performing it and the suitability of the equipment and facilities used. Agencies that meet the criteria of Practice D 3740, generally, are considered capable of competent and objective testing/sampling/inspection/etc. Users of this standard are cautioned that compliance with Practice D 3740 does not in itself assure reliable results. Reliable results depend on many factors; Practice D 3740 provides a means of evaluating some of those factors.

6. Apparatus

6.1 *Liquid Limit Device*—A mechanical device consisting of a brass cup suspended from a carriage designed to control its drop onto a hard rubber base. Fig. 1 shows the essential features and critical dimensions of the device. The device may be operated by either a hand crank or electric motor.

6.1.1 *Base*—A hard rubber base having a Type D Durometer hardness of 80 to 90, and resilience rebound of at least 77 % but no more than 90 %. Conduct resilience tests on the finished base with the feet attached. Details for measuring the resilience of the base are given in Annex A1.

6.1.2 *Rubber Feet,* supporting the base, designed to provide isolation of the base from the work surface, and having a Type A Durometer hardness no greater than 60 as measured on the finished feet attached to the base.

6.1.3 *Cup,* brass, with a mass, including cup hanger, of 185 to 215 g.

6.1.4 *Cam*—Designed to raise the cup smoothly and continuously to its maximum height, over a distance of at least 180° of cam rotation, without developing an upward or downward velocity of the cup when the cam follower leaves the cam. (The preferred cam motion is a uniformly accelerated lift curve.)

NOTE 2—The cam and follower design in Fig. 1 is for uniformly accelerated (parabolic) motion after contact and assures that the cup has no velocity at drop off. Other cam designs also provide this feature and may be used. However, if the cam-follower lift pattern is not known, zero velocity at drop off can be assured by carefully filing or machining the cam and follower so that the cup height remains constant over the last 20 to 45° of cam rotation.

6.1.5 *Carriage,* constructed in a way that allows convenient but secure adjustment of the height-of-drop of the cup to 10 mm (0.394 in.), and designed such that the cup and cup hanger assembly is only attached to the carriage by means of a removable pin. See Fig. 2 for definition and determination of the height-of-drop of the cup.

6.1.6 *Motor Drive (Optional)*—As an alternative to the hand crank shown in Fig. 1, the device may be equipped with a motor to turn the cam. Such a motor must turn the cam at 2 ± 0.1 revolutions per second and must be isolated from the rest of the device by rubber mounts or in some other way that prevents vibration from the motor being transmitted to the rest of the apparatus. It must be equipped with an ON-OFF switch and a means of conveniently positioning the cam for height-of-drop adjustments. The results obtained using a motor-driven device must not differ from those obtained using a manually operated device.

6.2 *Flat Grooving Tool*—A tool made of plastic or noncorroding-metal having the dimensions shown in Fig. 3. The design of the tool may vary as long as the essential dimensions are maintained. The tool may, but need not, incorporate the gage for adjusting the height-of-drop of the liquid limit device.

NOTE 3—Prior to the adoption of this test method, a curved grooving tool was specified as part of the apparatus for performing the liquid limit test. The curved tool is not considered to be as accurate as the flat tool

DIMENSIONS

LETTER	A△	B△	C△	E△	F	G	H	J△	K△	L△	M△
MM	54 ± 0.5	2 ± 0.1	27 ± 0.5	56 ± 2.0	32	10	16	60 ± 1.0	50 ± 2.0	150 ± 2.0	125 ± 2.0

LETTER	N	P	R	T	U△	V	W	Z
MM	24	28	24	45	47 ± 1.0	3.8	13	6.5

△ ESSENTIAL DIMENSIONS

CAM ANGLE DEGREES	CAM RADIUS
0	0.742 R
30	0.753 R
60	0.764 R
90	0.773 R
120	0.784 R
150	0.796 R
180	0.818 R
210	0.854 R
240	0.901 R
270	0.945 R
300	0.974 R
330	0.995 R
360	1.000 R

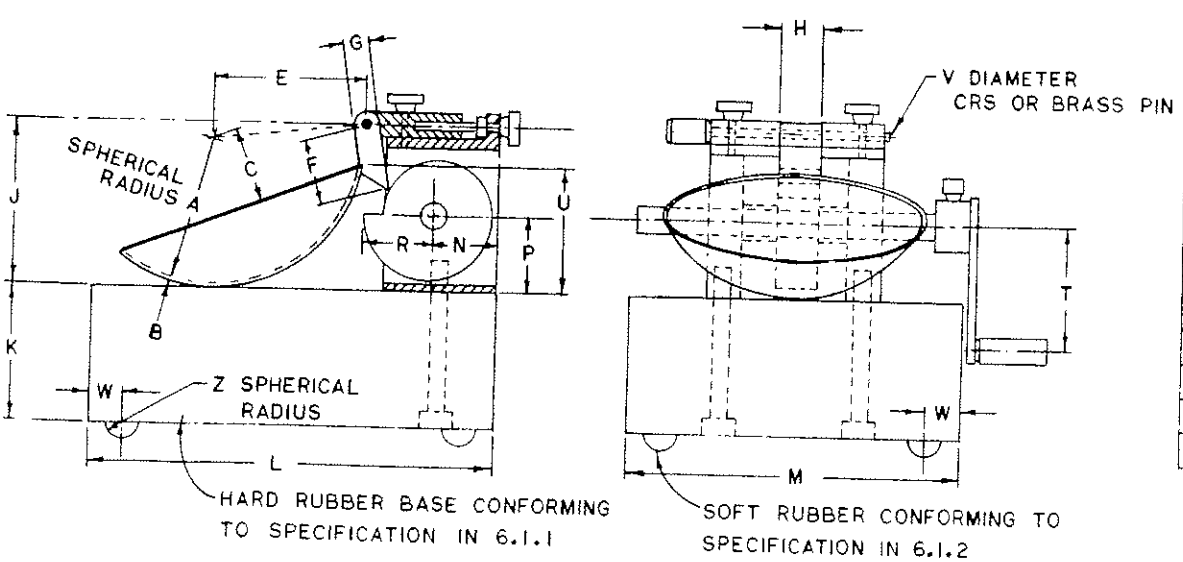

FIG. 1 Hand-Operated Liquid Limit Device

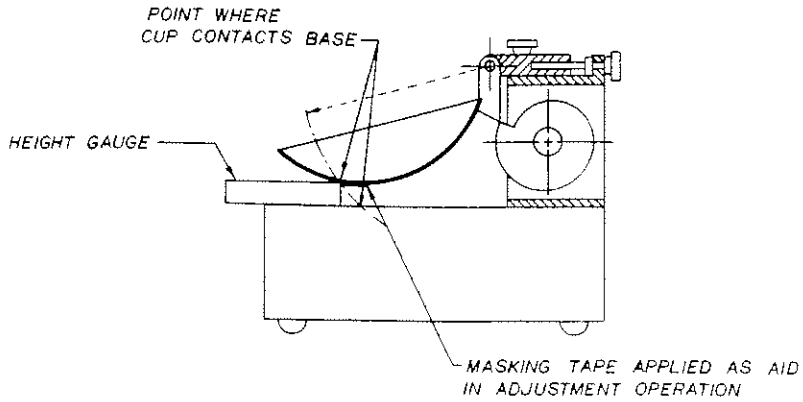

FIG. 2 Calibration for Height-of-Drop

DIMENSIONS

LETTER	A△	B△	C△	D△	E△	F△
MM	2 ± 0.1	11 ± 0.2	40 ± 0.5	8 ± 0.1	50 ± 0.5	2 ± 0.1
LETTER	G	H	J	K△	L△	N
MM	10 MINIMUM	13	60	10 ±0.05	60 DEG ± 1 DEG	20

△ ESSENTIAL DIMENSIONS

□ BACK AT LEAST 15 MM FROM TIP

NOTE: DIMENSION A SHOULD BE 1.9–2.0 AND DIMENSION D SHOULD BE 8.0–8.1 WHEN NEW TO ALLOW FOR ADEQUATE SERVICE LIFE

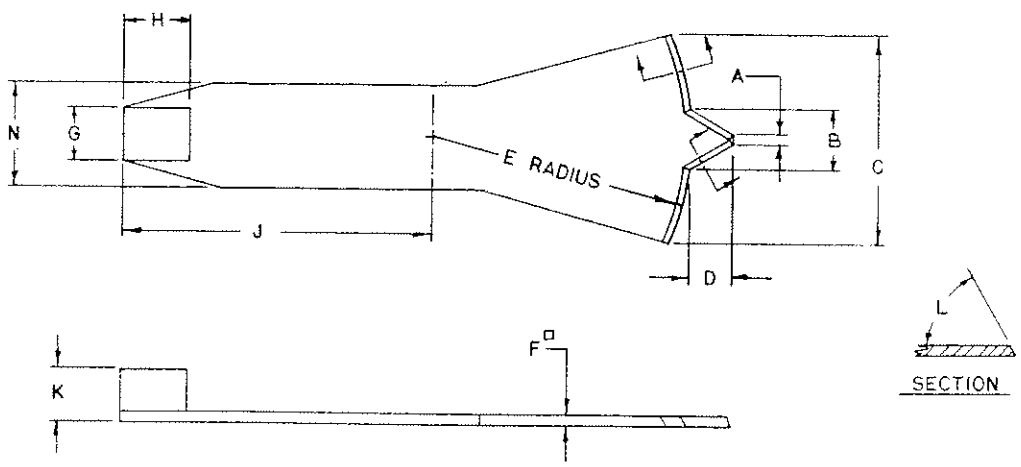

FIG. 3 Grooving Tool (Optional Height-of-Drop Gage Attached)

described in 6.2 since it does not control the depth of the soil in the liquid limit cup. However, there are some data which indicate that typically the liquid limit is slightly increased when the flat tool is used instead of the curved tool.

6.3 *Gage*—A metal gage block for adjusting the height-of-drop of the cup, having the dimensions shown in Fig. 4. The design of the tool may vary provided the gage will rest securely on the base without being susceptible to rocking, and the edge which contacts the cup during adjustment is straight, at least 10 mm (⅜ in.) wide, and without bevel or radius.

6.4 *Water Content Containers*—Small corrosion-resistant containers with snug-fitting lids for water content specimens. Aluminum or stainless steel cans 2.5 cm (1 in.) high by 5 cm (2 in.) in diameter are appropriate.

6.5 *Balance,* conforming to Specification D 4753, Class GP1 (readability of 0.01 g).

6.6 *Mixing and Storage Container*—A container to mix the soil specimen (material) and store the prepared material. During mixing and storage, the container shall not contaminate the material in any way, and prevent moisture loss during

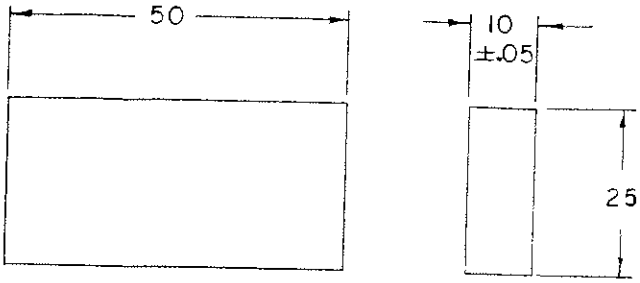

DIMENSIONS IN MILLIMETRES

FIG. 4 Height-of-Drop Gage

storage. A porcelain, glass, or plastic dish about 11.4 cm (4½ in.) in diameter and a plastic bag large enough to enclose the dish and be folded over is adequate.

6.7 *Plastic Limit:*

6.7.1 *Ground Glass Plate*—A ground glass plate at least 30 cm (12 in.) square by 1 cm (⅜ in.) thick for rolling plastic limit threads.

6.7.2 *Plastic Limit-Rolling Device (optional)*—A device made of acrylic conforming to the dimensions shown in Fig. 5.[3,4] The type of unglazed paper attached to the top and bottom plate (see 16.2.2) shall be such that it does not add foreign matter (fibers, paper fragments, etc.) to the soil during the rolling process.

[3] The plastic limit-rolling device is covered by a patent (U.S. Patent No. 5,027,660).[7] Interested parties are invited to submit information regarding the identification of an alternative(s) to this patented item to ASTM Headquarters. Your comments will receive careful consideration at a meeting of the responsible subcommittee, which you may attend.

[4] Bobrowski, L. J., Jr. and Griekspoor, D. M., "Determination of the Plastic Limit of a Soil by Means of a Rolling Device," *Geotechnical Testing Journal*, GTJODJ, Vol 15, No. 3, September 1992, pp. 284–287.

6.8 *Spatula*—A spatula or pill knife having a blade about 2 cm (¾ in.) wide, and about 10 to 13 cm (3 to 4 in.) long.

6.9 *Sieve(s)*—A 200-mm (8-in.) diameter, 425-µm (No. 40) sieve conforming to the requirements of Specification E 11 and having a rim at least 5 cm (2 in.) above the mesh. A 2.00-mm (No. 10) sieve meeting the same requirements may also be needed.

6.10 *Wash Bottle,* or similar container for adding controlled amounts of water to soil and washing fines from coarse particles.

6.11 *Drying Oven,* thermostatically controlled, preferably of the forced-draft type, capable of continuously maintaining a temperature of 110 ± 5°C (230 ± 9°F) throughout the drying chamber.

6.12 *Washing Pan,* round, flat-bottomed, at least 7.6 cm (3 in.) deep, and slightly larger at the bottom than a 20.3-cm (8-in.) diameter sieve.

7. Reagents and Materials

7.1 *Purity of Water*—Where distilled water is referred to in this test method, either distilled or demineralized water may be used. See Note 7 covering the use of tap water.

8. Sampling and Specimen

8.1 Samples may be taken from any location that satisfies testing needs. However, Practices C 702, D 75, and D 420 should be used as guides for selecting and preserving samples from various types of sampling operations. Samples in which specimens will be prepared using the wet-preparation method (10.1) must be kept at their as–sampled water content prior to preparation.

8.1.1 Where sampling operations have preserved the natural stratification of a sample, the various strata must be kept separated and tests performed on the particular stratum of

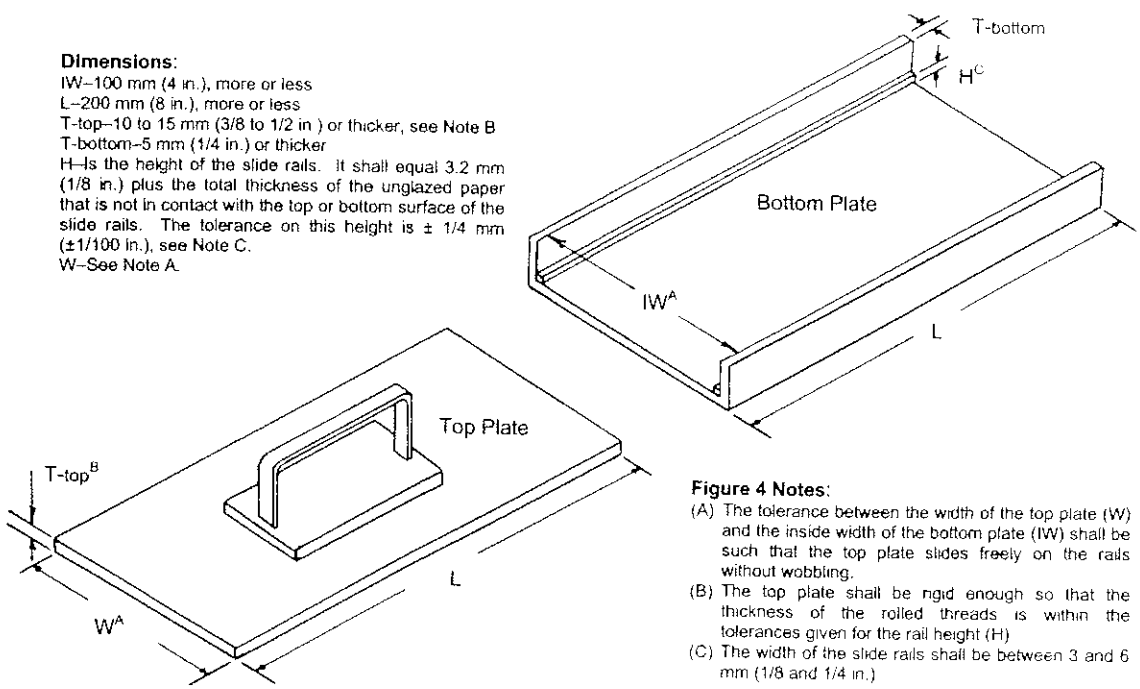

FIG. 5 Plastic Limit-Rolling Device

interest with as little contamination as possible from other strata. Where a mixture of materials will be used in construction, combine the various components in such proportions that the resultant sample represents the actual construction case.

8.1.2 Where data from these test methods are to be used for correlation with other laboratory or field test data, use the same material as used for those tests where possible.

8.2 *Specimen*—Obtain a representative portion from the total sample sufficient to provide 150 to 200 g of material passing the 425-µm (No. 40) sieve. Free flowing samples (materials) may be reduced by the methods of quartering or splitting. Non-free flowing or cohesive materials shall be mixed thoroughly in a pan with a spatula or scoop and a representative portion scooped from the total mass by making one or more sweeps with a scoop through the mixed mass.

9. Calibration of Apparatus

9.1 *Inspection of Wear:*

9.1.1 *Liquid Limit Device*—Determine that the liquid limit device is clean and in good working order. Check the following specific points.

9.1.1.1 *Wear of Base*—The spot on the base where the cup makes contact should be worn no greater than 10 mm (⅜ in.) in diameter. If the wear spot is greater than this, the base can be machined to remove the worn spot provided the resurfacing does not make the base thinner than specified in 6.1 and the other dimensional relationships are maintained.

9.1.1.2 *Wear of Cup*—Replace the cup when the grooving tool has worn a depression in the cup 0.1 mm (0.004 in.) deep or when the rim of the cup has been reduced to half its original thickness. Verify that the cup is firmly attached to the cup hanger.

9.1.1.3 *Wear of Cup Hanger*—Verify that the cup hanger pivot does not bind and is not worn to an extent that allows more than 3 mm (⅛ in.) side-to-side movement of the lowest point on the rim.

9.1.1.4 *Wear of Cam*—The cam shall not be worn to an extent that the cup drops before the cup hanger (cam follower) loses contact with the cam.

9.1.2 *Grooving Tools*—Inspect grooving tools for wear on a frequent and regular basis. The rapidity of wear depends on the material from which the tool is made, and the types of soils being tested. Soils containing a large proportion of fine sand particles may cause rapid wear of grooving tools; therefore, when testing these materials, tools should be inspected more frequently than for other soils.

NOTE 4—The width of the tip of grooving tools is conveniently checked using a pocket-sized measuring magnifier equipped with a millimeter scale. Magnifiers of this type are available from most laboratory supply companies. The depth of the tip of grooving tools can be checked using the depth-measuring feature of vernier calipers.

9.2 *Adjustment of Height-of-Drop*—Adjust the height-of-drop of the cup so that the point on the cup that comes in contact with the base rises to a height of 10 ± 0.2 mm. See Fig. 2 for proper location of the gage relative to the cup during adjustment.

NOTE 5—A convenient procedure for adjusting the height-of-drop is as follows: place a piece of masking tape across the outside bottom of the cup parallel with the axis of the cup hanger pivot. The edge of the tape away from the cup hanger should bisect the spot on the cup that contacts the base. For new cups, placing a piece of carbon paper on the base and allowing the cup to drop several times will mark the contact spot. Attach the cup to the device and turn the crank until the cup is raised to its maximum height. Slide the height gage under the cup from the front, and observe whether the gage contacts the cup or the tape. (See Fig. 2.) If the tape and cup are both simultaneously contacted, the height-of-drop is ready to be checked. If not, adjust the cup until simultaneous contact is made. Check adjustment by turning the crank at 2 revolutions per second while holding the gage in position against the tape and cup. If a faint ringing or clicking sound is heard without the cup rising from the gage, the adjustment is correct. If no ringing is heard or if the cup rises from the gage, readjust the height-of-drop. If the cup rocks on the gage during this checking operation, the cam follower pivot is excessively worn and the worn parts should be replaced. Always remove tape after completion of adjustment operation.

10. Preparation of Test Specimen

10.1 *Wet Preparation Method*—Except where the dry method of specimen preparation is specified (10.2), prepare the specimen for testing as described in the following sections.

10.1.1 *Material Passes the 425-µm (No. 40) Sieve:*

10.1.1.1 Determine by visual and manual methods that the specimen from 8.2 has little or no material retained on a 425-µm (No. 40) sieve. If this is the case, prepare 150 to 200 g of material by mixing thoroughly with distilled or demineralized water on the glass plate or mixing dish using the spatula. If desired, soak the material in a mixing/storage dish with a small amount of water to soften the material before the start of mixing. If using Method A, adjust the water content of the material to bring it to a consistency that would require about 25 to 35 blows of the liquid limit device to close the groove (Note 6). For Method B, the number of blows should be between about 20 and 30 blows.

10.1.1.2 If, during mixing, a small percentage of material is encountered that would be retained on a 425-µm (No. 40) sieve, remove these particles by hand (if possible). If it is impractical to remove the coarser material by hand, remove small percentages (less than about 15 %) of coarser material by working the material (having the above consistency) through a 425-µm sieve. During this procedure, use a piece of rubber sheeting, rubber stopper, or other convenient device provided the procedure does not distort the sieve or degrade material that would be retained if the washing method described in 10.1.2 were used. If larger percentages of coarse material are encountered during mixing, or it is considered impractical to remove the coarser material by the procedures just described, wash the sample as described in 10.1.2. When the coarse particles found during mixing are concretions, shells, or other fragile particles, do not crush these particles to make them pass a 425-µm sieve, but remove by hand or by washing.

10.1.1.3 Place the prepared material in the mixing/storage dish, check its consistency (adjust if required), cover to prevent loss of moisture, and allow to stand (cure) for at least 16 h (overnight). After the standing period and immediately before starting the test, thoroughly remix the soil.

NOTE 6—The time taken to adequately mix a soil will vary greatly, depending on the plasticity and initial water content. Initial mixing times of more than 30 min may be needed for stiff, fat clays.

10.1.2 *Material Containing Particles Retained on a 425-µm (No. 40) Sieve:*

10.1.2.1 Place the specimen (see 8.2) in a pan or dish and add sufficient water to cover the material. Allow the material to soak until all lumps have softened and the fines no longer adhere to the surfaces of the coarse particles (Note 7).

NOTE 7—In some cases, the cations of salts present in tap water will exchange with the natural cations in the soil and significantly alter the test results if tap water is used in the soaking and washing operations. Unless it is known that such cations are not present in the tap water, distilled or demineralized water should be used. As a general rule, water containing more than 100 mg/L of dissolved solids should not be used for either the soaking or washing operations.

10.1.2.2 When the material contains a large percentage of particles retained on the 425-µm (No. 40) sieve, perform the following washing operation in increments, washing no more than 0.5 kg (1 lb) of material at one time. Place the 425-µm sieve in the bottom of the clean pan. Transfer, without any loss of material, the soil-water mixture onto the sieve. If gravel or coarse sand particles are present, rinse as many of these as possible with small quantities of water from a wash bottle, and discard. Alternatively, transfer the soil-water mixture over a 2.00-mm (No. 10) sieve nested atop the 425-µm sieve, rinse the fine material through and remove the 2.00-mm sieve. After washing and removing as much of the coarser material as possible, add sufficient water to the pan to bring the level to about 13 mm (½ in.) above the surface of the 425-µm sieve. Agitate the slurry by stirring with the fingers while raising and lowering the sieve in the pan and swirling the suspension so that fine material is washed from the coarser particles. Disaggregate fine soil lumps that have not slaked by gently rubbing them over the sieve with the fingertips. Complete the washing operation by raising the sieve above the water surface and rinsing the material retained with a small amount of clean water. Discard material retained on the 425-µm sieve.

10.1.2.3 Reduce the water content of the material passing the 425-µm (No. 40) sieve until it approaches the liquid limit. Reduction of water content may be accomplished by one or a combination of the following methods: (*a*) exposing to air currents at room temperature, (*b*) exposing to warm air currents from a source such as an electric hair dryer, (*c*) decanting clear water from surface of the suspension, (*d*) filtering in a Büchner funnel or using filter candles, or (*e*) draining in a colander or plaster of Paris dish lined with high retentivity,[5] high wet-strength filter paper. If a plaster of Paris dish is used, take care that the dish never becomes sufficiently saturated that it fails to absorb water into its surface. Thoroughly dry dish between uses. During evaporation and cooling, stir the material often enough to prevent over-drying of the fringes and soil pinnacles on the surface of the mixture. For materials containing soluble salts, use a method of water reduction (*a* or *b*) that will not eliminate the soluble salts from the test specimen.

10.1.2.4 If applicable, remove the material retained on the filter paper. Thoroughly mix this material or the above material on the glass plate or in the mixing dish using the spatula. Adjust the water content of the mixture, if necessary, by adding small increments of distilled or demineralized water or by allowing the mixture to dry at room temperature while mixing on the glass plate. If using Method A, the material should be at a water content that would require about 25 to 35 blows of the liquid limit device to close the groove. For Method B, the number of blows should be between about 20 and 30. Put, if necessary, the mixed material in the storage dish, cover to prevent loss of moisture, and allow to stand (cure) for at least 16 h. After the standing period and immediately before starting the test, thoroughly remix the specimen.

10.2 *Dry Preparation Method:*

10.2.1 Dry the specimen from 8.2 at room temperature or in an oven at a temperature not exceeding 60°C until the soil clods will pulverize readily. Disaggregation is expedited if the material is not allowed to completely dry. However, the material should have a dry appearance when pulverized.

10.2.2 Pulverize the material in a mortar with a rubber-tipped pestle or in some other way that does not cause breakdown of individual particles. When the coarse particles found during pulverization are concretions, shells, or other fragile particles, do not crush these particles to make them pass a 425-µm (No. 40) sieve, but remove by hand or other suitable means, such as washing. If a washing procedure is used, follow 10.1.2.1-10.1.2.4.

10.2.3 Separate the material on a 425-µm (No. 40) sieve, shaking the sieve by hand to assure thorough separation of the finer fraction. Return the material retained on the 425-µm sieve to the pulverizing apparatus and repeat the pulverizing and sieving operations. Stop this procedure when most of the fine material has been disaggregated and material retained on the 425-µm sieve consists of individual particles.

10.2.4 Place material retained on the 425-µm (No. 40) sieve after the final pulverizing operations in a dish and soak in a small amount of water. Stir this mixture and transfer it to a 425-µm sieve, catching the water and any suspended fines in the washing pan. Pour this suspension into a dish containing the dry soil previously sieved through the 425-µm sieve. Discard material retained on the 425-µm sieve.

10.2.5 Proceed as described in 10.1.2.3 and 10.1.2.4.

MULTIPOINT LIQUID LIMIT—METHOD A

11. Procedure

11.1 Thoroughly remix the specimen (soil) in its mixing cup, and, if necessary, adjust its water content until the constancy requires about 25 to 35 blows of the liquid limit device to close the groove. Using a spatula, place a portion(s) of the prepared soil in the cup of the liquid limit device at the point where the cup rests on the base, squeeze it down, and spread it into the cup to a depth of about 10 mm at its deepest point, tapering to form an approximately horizontal surface. Take care to eliminate air bubbles from the soil pat, but form the pat with as few strokes as possible. Keep the unused soil in the mixing/storage dish. Cover the dish with a wet towel (or use other means) to retain the moisture in the soil.

11.2 Form a groove in the soil pat by drawing the tool, beveled edge forward, through the soil on a line joining the highest point to the lowest point on the rim of the cup. When cutting the groove, hold the grooving tool against the surface of

[5] S and S 595 filter paper available in 320-mm circles has proven satisfactory.

the cup and draw in an arc, maintaining the tool perpendicular to the surface of the cup throughout its movement. See Fig. 6. In soils where a groove cannot be made in one stroke without tearing the soil, cut the groove with several strokes of the grooving tool. Alternatively, cut the groove to slightly less than required dimensions with a spatula and use the grooving tool to bring the groove to final dimensions. Exercise extreme care to prevent sliding the soil pat relative to the surface of the cup.

11.3 Verify that no crumbs of soil are present on the base or the underside of the cup. Lift and drop the cup by turning the crank at a rate of 1.9 to 2.1 drops per second until the two halves of the soil pat come in contact at the bottom of the groove along a distance of 13 mm (½ in.). See Fig. 7 and Fig. 8.

NOTE 8—Use of a scale is recommended to verify that the groove has closed 13 mm (½ in.).

11.4 Verify that an air bubble has not caused premature closing of the groove by observing that both sides of the groove have flowed together with approximately the same shape. If a bubble has caused premature closing of the groove, reform the soil in the cup, adding a small amount of soil to make up for that lost in the grooving operation and repeat 11.1-11.3. If the soil slides on the surface of the cup, repeat 11.1-11.3 at a higher water content. If, after several trials at successively higher water contents, the soil pat continues to slide in the cup or if the number of blows required to close the groove is always less than 25, record that the liquid limit could not be determined, and report the soil as nonplastic without performing the plastic limit test.

11.5 Record the number of drops, N, required to close the groove. Remove a slice of soil approximately the width of the spatula, extending from edge to edge of the soil cake at right angles to the groove and including that portion of the groove in which the soil flowed together, place in a container of known mass, and cover.

11.6 Return the soil remaining in the cup to the dish. Wash and dry the cup and grooving tool and reattach the cup to the carriage in preparation for the next trial.

11.7 Remix the entire soil specimen in the dish adding distilled water to increase the water content of the soil and decrease the number of blows required to close the groove. Repeat 11.1-11.6 for at least two additional trials producing successively lower numbers of blows to close the groove. One of the trials shall be for a closure requiring 25 to 35 blows, one for closure between 20 and 30 blows, and one trial for a closure requiring 15 to 25 blows.

11.8 Determine the water content, W^n, of the soil specimen from each trial in accordance with Test Method D 2216.

11.8.1 Determination of initial masses (container plus moist soil) should be performed immediately after completion of the test. If the test is to be interrupted for more than about 15 minutes, determine the mass of the water content specimens already obtained at the time of the interruption.

12. Calculation

12.1 Plot the relationship between the water content, W^n, and the corresponding number of drops, N, of the cup on a semilogarithmic graph with the water content as ordinates on the arithmetical scale, and the number of drops as abscissas on a logarithmic scale. Draw the best straight line through the three or more plotted points.

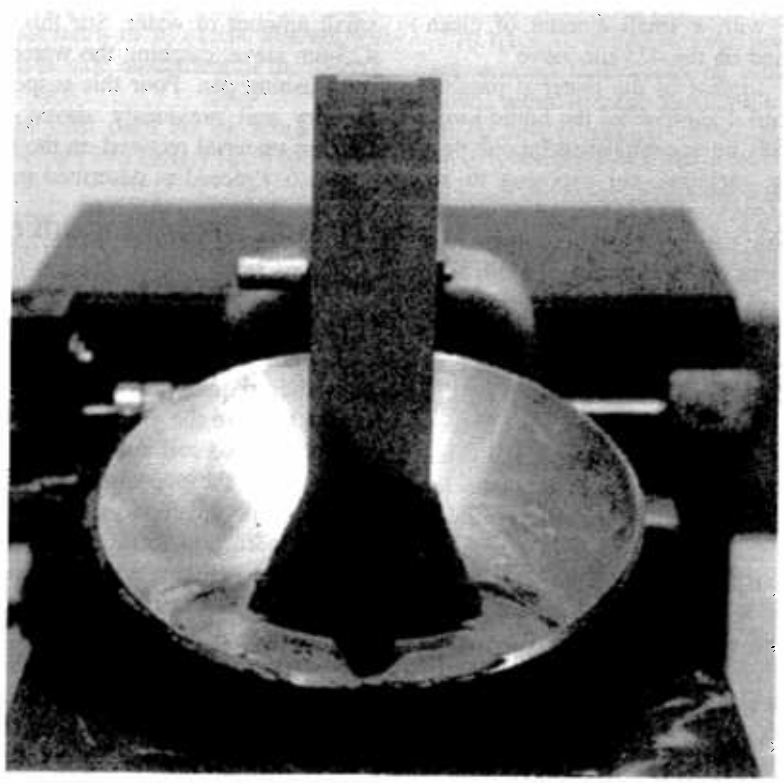

FIG. 6 Example of Grooving Tool Placed in a Properly Grooved Soil Pat

FIG. 7 Grooved Soil Pat In Liquid Limit Device

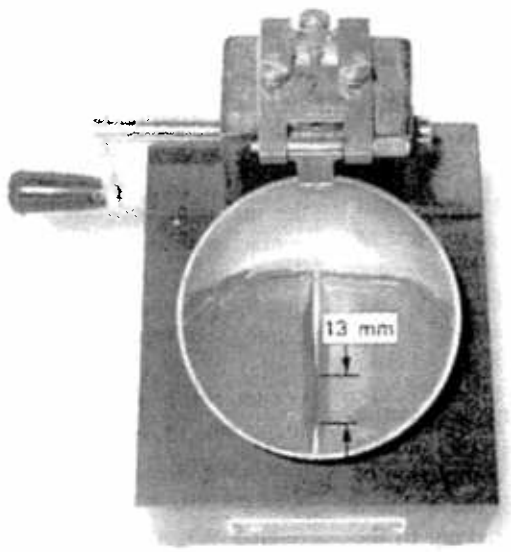

FIG. 8 Soil Pat After Groove Has Closed

12.2 Take the water content corresponding to the intersection of the line with the 25-drop abscissa as the liquid limit of the soil and round to the nearest whole number. Computational methods may be substituted for the graphical method for fitting a straight line to the data and determining the liquid limit.

ONE-POINT LIQUID LIMIT—METHOD B

13. Procedure

13.1 Proceed as described in 11.1-11.5 except that the number of blows required to close the groove shall be 20 to 30.

If less than 20 or more than 30 blows are required, adjust the water content of the soil and repeat the procedure.

13.2 Immediately after removing a water content specimen as described in 11.5, reform the soil in the cup, adding a small amount of soil to make up for that lost in the grooving and water content sampling orientations. Repeat 11.2-11.5, and, if the second closing of the groove requires the same number of drops or no more than two drops difference, secure another water content specimen. Otherwise, remix the entire specimen and repeat.

NOTE 9—Excessive drying or inadequate mixing will cause the number of blows to vary.

13.3 Determine water contents of specimens in accordance with 11.8.

14. Calculation

14.1 Determine the liquid limit for each water content specimen using one of the following equations:

$$LL^n = W^n \cdot \left(\frac{N}{25}\right)^{0.121}$$

or

$$LL^n = k \cdot W^n$$

where:

LL^n = one point liquid limit for given trial, %,
N = number of blows causing closure of the groove for given trial,
W^n = water content for given trial, %, and
k = factor given in Table 1.

14.1.1 The liquid limit, LL, is the average of the two trial liquid-limit values, to the nearest whole number (without the percent designation).

14.2 If the difference between the two trial liquid-limit values is greater than one percentage point, repeat the test as described in 13.1 through 14.1.1.

PLASTIC LIMIT

15. Preparation of Test Specimen

15.1 Select a 20-g or more portion of soil from the material prepared for the liquid limit test; either, after the second mixing before the test, or from the soil remaining after completion of the liquid limit test. Reduce the water content of the soil to a consistency at which it can be rolled without sticking to the hands by spreading or mixing continuously on the glass plate or in the mixing/storage dish. The drying process may be accelerated by exposing the soil to the air current from an electric fan, or by blotting with paper, that does not add any fiber to the soil. Paper such as hard surface paper toweling or high wet-strength filter paper is adequate.

TABLE 1 Factors for Obtaining Liquid Limit from Water Content and Number of Drops Causing Closure of Groove

N (Number of Drops)	k (Factor for Liquid Limit)
20	0.973
21	0.979
22	0.985
23	0.990
24	0.995
25	1.000
26	1.005
27	1.009
28	1.014
29	1.018
30	1.022

16. Procedure

16.1 From this plastic-limit specimen, select a 1.5 to 2.0 g portion. Form the selected portion into an ellipsoidal mass.

16.2 Roll the soil mass by one of the following methods (hand or rolling device):

16.2.1 *Hand Method*—Roll the mass between the palm or fingers and the ground-glass plate with just sufficient pressure to roll the mass into a thread of uniform diameter throughout its length (see Note 10). The thread shall be further deformed on each stroke so that its diameter reaches 3.2 mm (⅛ in.), taking no more than 2 min (see Note 11). The amount of hand or finger pressure required will vary greatly according to the soil being tested, that is, the required pressure typically increases with increasing plasticity. Fragile soils of low plasticity are best rolled under the outer edge of the palm or at the base of the thumb.

NOTE 10—A normal rate of rolling for most soils should be 80 to 90 strokes per minute, counting a stroke as one complete motion of the hand forward and back to the starting position. This rate of rolling may have to be decreased for very fragile soils.

NOTE 11—A 3.2-mm (⅛-in.) diameter rod or tube is useful for frequent comparison with the soil thread to ascertain when the thread has reached the proper diameter.

16.2.2 *Rolling Device Method*—Attach smooth unglazed paper to both the top and bottom plates of the plastic limit-rolling device. Place the soil mass on the bottom plate at the midpoint between the slide rails. Place the top plate in contact with the soil mass(es). Simultaneously apply a slight downward force and back and forth motion to the top plate so that the top plate comes into contact with the side rails within 2 min (see Notes 10 and 12). During this rolling process, the end(s) the soil thread(s) shall not contact the side rail(s). If this occurs, roll a smaller mass of soil (even if it is less than that mentioned in Section 16.1).

NOTE 12—In most cases, two soil masses (threads) can be rolled simultaneously in the plastic limit-rolling device.

16.3 When the diameter of the thread becomes 3.2 mm, break the thread into several pieces. Squeeze the pieces together, knead between the thumb and first finger of each hand, reform into an ellipsoidal mass, and re-roll. Continue this alternate rolling to a thread 3.2 mm in diameter, gathering together, kneading and re-rolling, until the thread crumbles under the pressure required for rolling and the soil can no longer be rolled into a 3.2-mm diameter thread (see Fig. 9). It has no significance if the thread breaks into threads of shorter length. Roll each of these shorter threads to 3.2 mm in diameter. The only requirement for continuing the test is that these threads can be reformed into an ellipsoidal mass and rolled out again. The operator shall at no time attempt to produce failure at exactly 3.2-mm diameter by allowing the thread to reach 3.2 mm, then reducing the rate of rolling or the

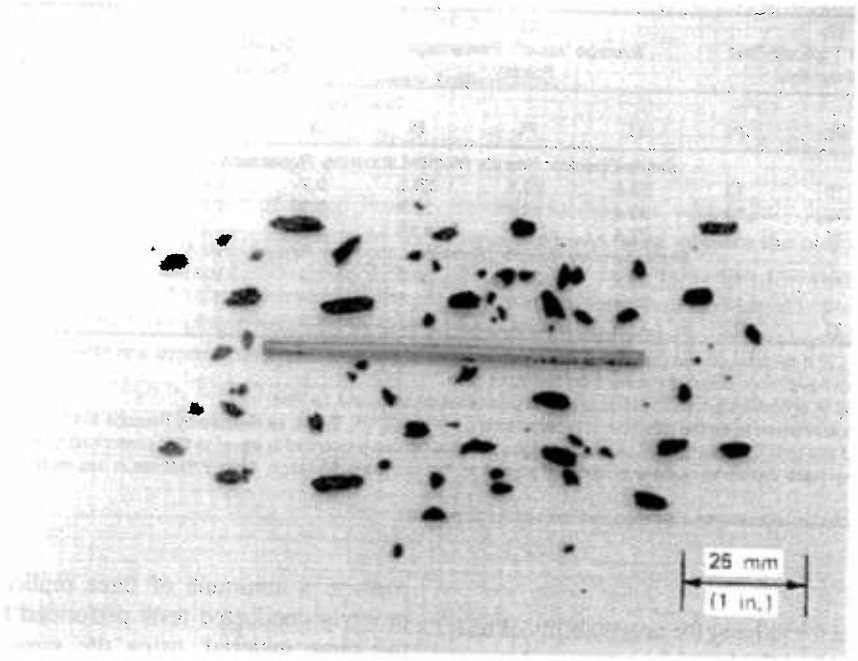

FIG. 9 Lean Clay Soil at the Plastic Limit

hand pressure, or both, while continuing the rolling without further deformation until the thread falls apart. It is permissible, however, to reduce the total amount of deformation for feebly plastic soils by making the initial diameter of the ellipsoidal mass nearer to the required 3.2-mm final diameter. If crumbling occurs when the thread has a diameter greater than 3.2 mm, this shall be considered a satisfactory end point, provided the soil has been previously rolled into a thread 3.2 mm in diameter. Crumbling of the thread will manifest itself differently with the various types of soil. Some soils fall apart in numerous small aggregations of particles, others may form an outside tubular layer that starts splitting at both ends. The splitting progresses toward the middle, and finally, the thread falls apart in many small platy particles. Fat clay soils require much pressure to deform the thread, particularly as they approach the plastic limit. With these soils, the thread breaks into a series of barrel-shaped segments about 3.2 to 9.5 mm (⅛ to ⅜ in.) in length.

16.4 Gather the portions of the crumbled thread together and place in a container of known mass. Immediately cover the container.

16.5 Select another 1.5 to 2.0-g portion of soil from the plastic–limit specimen and repeat the operations described in 16.1 and 16.2 until the container has at least 6 g of soil.

16.6 Repeat 16.1-16.5 to make another container holding at least 6 g of soil. Determine the water content of the soil contained in the containers in accordance with Test Method D 2216. See 11.8.1.

17. Calculation

17.1 Compute the average of the two water contents (trial plastic limits) and round to the nearest whole number. This value is the plastic limit, *PL*. Repeat the test if the difference between the two trial plastic limits is greater than the acceptable range for two results listed in Table 2 for single-operator precision, that is, 1.4 percentage points; i.e., (2.8 × 0.5).

PLASTICITY INDEX

18. Calculation

18.1 Calculate the plasticity index as follows:

$$PI = LL - PL$$

where:

LL = liquid limit (whole number), and
PL = plastic limit (whole number).

18.1.1 Both LL and PL are whole numbers. If either the liquid limit or plastic limit could not be determined, or if the plastic limit is equal to or greater than the liquid limit, report the soil as nonplastic, NP.

19. Report

19.1 Report the following information:

19.1.1 Sample identifying information,

19.1.2 Any special specimen selection process used, such as removal of sand lenses from undisturbed sample,

19.1.3 Report sample as air-dried if the sample was air-dried before or during preparation,

19.1.4 Liquid limit, plastic limit, and plasticity index to the nearest whole number, omitting the percent designation. If the liquid limit or plastic limit tests could not be performed, or if the plastic limit is equal to or greater than the liquid limit, report the soil as nonplastic, NP,

19.1.5 Estimate of the percentage of sample retained on the 425-µm (No. 40) sieve, and

19.1.6 Procedure by which liquid limit was performed, if it differs from the multipoint method.

TABLE 2 Summary of Test Results from Triplicate Test Laboratories (Atterberg Limits)

(1) Soil Type	(2) Number of Triplicate Test Laboratories			(3) Average Value[A] (Percentage Points)			(4) Standard Deviation[B] (Percentage Points)			(5) Acceptable Range of Two Results[C] (Percentage Points)		
	Type Test											
	LL	PL	PI	LL	PL	PI	LL	PL	PI	LL	PL	PI
Single-Operator Results (Within-Laboratory Repeatability)												
CH	13	13	13	59.8	20.6	39.2	0.7	0.5	0.8	2	1	2
CL	14	13	13	33.4	19.9	13.6	0.3	0.4	0.5	1	1	1
ML	12	11	11	27.4	23.4[D]	4.1[D]	0.5	0.3	0.6	2	1	2
Multilaboratory Results (Between-Laboratory Reproducibility)												
CH	13	13	13	59.8	20.6	39.2	1.3	2.0	2.5	4	6	7
CL	14	13	13	33.4	19.9	13.6	1.0	1.2	1.7	3	3	5
ML	12	11	11	27.4	23.4[D]	4.1[D]	1.3	0.9	1.9	4	3	5

[A]The number of significant digits and decimal places presented are representative of the input data. In accordance with Practice D 6026, the standard deviation and acceptable range of results can not have more decimal places than the input data.

[B]Standard deviation is calculated in accordance with Practice E 691 and is referred to as the 1*s* limit.

[C]Acceptable range of two results is referred to as the d2*s* limit. It is calculated as $-1.960 \cdot \sqrt{2} \cdot 1s$, as defined by Practice E 177. The difference between two properly conducted tests should not exceed this limit. The number of significant digits/decimal places presented is equal to that prescribed by this test method or Practice D 6026. In addition, the value presented can have the same number of decimal places as the standard deviation, even if that result has more significant digits than the standard deviation.

[D]For the ML soil, 2 out of 14 triplicate test laboratories reported the soil as nonplastic.

20. Precision and Bias

20.1 *Precision*—Criteria for judging the acceptability of test results obtained by these test methods on a range of soil types are given in Tables 2 and 3. In performing these test methods, Method A and the Wet Preparation Method (except soil was air-dried) were used.

20.1.1 These estimates of precision are based on the results of the interlaboratory program conducted by the ASTM Reference Soils and Testing Program.[6] In this program, some laboratories performed three replicate tests per soil type (triplicate test laboratory), while other laboratories performed a single test per soil type (single-test laboratory). A description of the soils tested is given in 20.1.5. The precision estimates vary with soil type and method(s) used. Judgment is required when applying these estimates to another soil and method used (Method A or B, or Wet or Dry Preparation Method).

20.1.2 The data in Table 2 are based on three replicate tests performed by each triplicate test laboratory on each soil type. The single operator and multilaboratory standard deviation shown in Table 2, Column 4, were obtained in accordance with Practice E 691, which recommends each testing laboratory perform a minimum of three replicate tests. Results of two properly conducted tests performed by the same operator on the same material, using the same equipment, and in the shortest practical period of time should not differ by more than the single-operator d2*s* limits shown in Table 2, Column 5. For definition of d2*s* see Footnote C in Table 2. Results of two properly conducted tests performed by different operators and on different days should not differ by more than the multilaboratory d2*s* limits shown in Table 2, Column 5.

20.1.3 In the ASTM Reference Soils and Testing Program, many of the laboratories performed only a single test on each soil type. This is common practice in the design and construction industry. The data for each soil type in Table 3 are based upon the first test results from the triplicate test laboratories and the single test results from the other laboratories. Results of two properly conducted tests performed by two different laboratories with different operators using different equipment and on different days should not vary by more than the d2*s* limits shown in Table 3, Column 5. The results in Table 2 and Table 3 are dissimilar because the data sets are different.

20.1.4 Table 2 presents a rigorous interpretation of triplicate test data in accordance with Practice E 691 from pre-qualified laboratories. Table 3 is derived from test data that represents common practice.

20.1.5 *Soil Types*—Based on the multilaboratory test results, the soils used in the program are described below in accordance with Practice D 2487. In addition, the local names of the soils are given.

CH—Fat clay, CH, 99 % fines, LL=60, PI=39, grayish brown, soil had been air dried and pulverized. Local name—Vicksburg Buckshot Clay

CL—Lean clay, CL, 89 % fines, LL=33, PI=13, gray, soil had been air dried and pulverized. Local name—Annapolis Clay

ML—Silt, ML, 99 % fines, LL=27, PI=4, light brown, soil had been air dried and pulverized. Local name—Vicksburg Silt

20.2 *Bias*—There is no acceptable reference value for these test methods; therefore, bias cannot be determined.

21. Keywords

21.1 activity; Atterberg limits; liquid limit; plasticity index; plastic limit

[6] Supporting data are available from ASTM Headquarters. Request RR: D18-1013.

TABLE 3 Summary of Single-Test Result from Each Laboratory (Atterberg Limits)[A]

(1) Soil Type	(2) Number of Test Laboratories	(3) Average Value (Percentage Points)			(4) Standard Deviation (Percentage Points)			(5) Acceptable Range of Two Results (Percentage Points)		
		Type Test								
		LL	PL	PI	LL	PL	PI	LL	PL	PI
CH	24	59.9	20.4	39.5	2.1	2.7	3.1	6	7	9
CL	24	33.3	19.9	13.4	0.8	1.3	1.6	2	4	4
ML	18	27.1	23.2[B]	3.9[B]	1.3	1.2	1.8	4	3	5

[A]For column footnotes, see Table 3.

[B]For the ML soil, 6 out of 24 laboratories reported the soil as nonplastic.

ANNEX

(Mandatory Information)

A1. Resilience Tester

A1.1 A device for measuring the resilience of liquid limit device bases is shown in Fig. A1.1. The device consists of a clear acrylic plastic tube and cap, a 5/16-in. diameter steel ball, and a small bar magnet. The cylinder may be cemented to the cap or threaded as shown. The small bar magnet is held in the recess of the cap and the steel ball is fixed into the recess in the underside of the cap with the bar magnet. The cylinder is then turned upright and placed on the top surface of the base to be tested. Holding the tube lightly against the liquid limit device base with one hand, release the ball by pulling the magnet out of the cap. Use the scale markings on the outside of the cylinder to determine the highest point reached by the bottom of the ball. Repeat the drop at least three times, placing the tester in a different location for each drop. Tests should be conducted at room temperature.

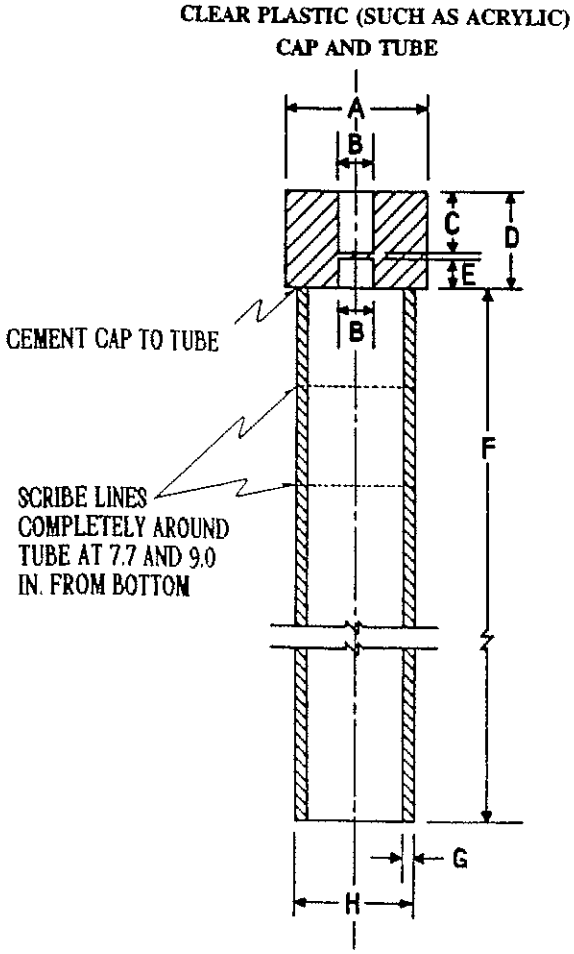

TABLE OF MEASUREMENTS

DIMENSION	DESCRIPTION	ENGLISH, in.	METRIC, mm
A	DIAM. OF CAP	1 1/2	38.10
B	DIAM. OF HOLE	3/8	9.52
C	DEPTH OF HOLE	10/16	15.88
D	HEIGHT OF CAP	1	25.40
E	DEPTH OF HOLE	5/16	7.94
F	LENGTH OF TUBE	10	254.00
G	WALL THICKNESS	1/8	3.18
H	O.D. OF TUBE	1 1/4	31.75

FIG. A1.1 Resilience Tester

APPENDIX

X1. Sample Data Sheet

X1.1 See Fig. X1.1.

Laboratory Name: Example
Soil Type: CH-1
Initial Visual Description: CH, brown, highly plastic clay
Sample Number: N/A

Project Name: Example
Boring Number: N/A

Project Number: Example
Depth (m or ft): N/A

INITIAL VISUAL USCS GROUP SYMBOL:	CH

SPECIMEN PREPARATION			
Wet:	X	Washed on #40 Sieve	
Dry (Air):		Dry Sieved on #40 Sieve	
Dry (Oven):		Mechanically Pushed Through #40 Sieve	
Mixed on Glass Plate and Removed Medium Plus Sand Particles			X
Mixing Water: Distilled	X	Demineralized:	Other:

TESTING EQUIPMENT USED		
Plastic Limit:	Hand Rolled	X
	Mechanical Rolling Device	
Liquid Limit:	Manual	X
Apparatus No. ( )	Mechanical	
Casagrande/ASTM	Metal	
Grooving Tool:	Plastic	X

AS-RECEIVED WATER CONTENT (OVEN DRIED)

Container No.	example	example	
Mass Moist Soil + Container, M1 (g)	n/a	n/a	
Mass Dry Soil + Container, M2 (g)			
Mass Container, M3 (g)			Average
WATER CONTENT, w_o (%)			

Circle Approximate Max. Grain Size in Sample 3" 1-1/2" 3/4" 3/8" #4 #10 <#10

PLASTIC LIMIT

Container No.	151	s-110	
Mass Moist Soil + Container, M1 (g)	24.44	23.75	
Mass Dry Soil + Container, M2 (g)	22.96	22.13	
Mass Container, M3 (g)	16.76	15.32	Average
WATER CONTENT, w_p (%)	23.9	23.8	23.9

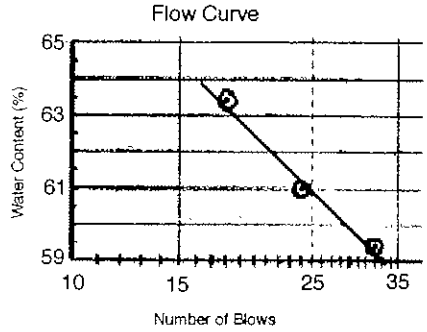

LIQUID LIMIT

Container No.	147	232	152	
Mass Moist Soil + Container, M1 (g)	35.24	37.79	35.88	
Mass Dry Soil + Container, M2 (g)	28.52	30.50	28.46	
Mass Container, M3 (g)	17.13	18.55	16.75	
WATER CONTENT, w_n (%)	59.3	61.0	63.4	
NUMBER OF BLOWS, N	32	24	18	Average
LIQUID LIMIT, ASTM SINGLE POINT	n/a	n/a	n/a	n/a

LINEAR REGRESSION ANALYSIS	
w at N = 25 Blows	
Coef. Of Determination, r^2	

Recommended range of Blow Count for Multiple Point Method A: SUMMARY
15 to 25, 25 to 30, and 25 to 35
Recommended range of Blow Count for Single Point Method B:
20 to 30
wo or w = ((M1-M2)/(M2-M3))x100
LL = Water Content at N=25 blows, from Flow Curve
LL by Single Point = w x (N/25)0.121
PI = LL - PL
LI = (wo-PL) / (LL - PL)

TEST METHOD	A	X	B		Wet	X	Dry	
AS-RECEIVED WATER CONTENT, w_o (%)							n/a	
LIQUID LIMIT, LL							61	
PLASTIC LIMIT, PL							24	
PLASTICITY INDEX, PI							37	
LIQUIDITY INDEX, LI							n/a	
PERCENTAGE POINTS ABOVE/BELOW A-LINE							n/a	
PLASTICITY CHART CLASSIFICATION							CH	

PREPARED BY: _____ DATE: _____ DRY MASS BY: _____ CHECKED BY: _____
TESTED BY: _____ DATE: _____ CALCULATED BY: _____ SPOT CHECKED BY: _____
REVIEWED BY: _____

FIG. X1.1 Sample Data Sheet

SUMMARY OF CHANGES

Committee D18 has identified the location of selected changes to this standard since the last issue (2000) that may impact the use of this standard.

(*1*) Revised 3.1.1.
(*2*) Added new Fig. 6 and Fig. 7 and subsequent figures were renumbered.
(*3*) Added Appendix X1 and Fig. X1.1.

ASTM International takes no position respecting the validity of any patent rights asserted in connection with any item mentioned in this standard. Users of this standard are expressly advised that determination of the validity of any such patent rights, and the risk of infringement of such rights, are entirely their own responsibility.

This standard is subject to revision at any time by the responsible technical committee and must be reviewed every five years and if not revised, either reapproved or withdrawn. Your comments are invited either for revision of this standard or for additional standards and should be addressed to ASTM International Headquarters. Your comments will receive careful consideration at a meeting of the responsible technical committee, which you may attend. If you feel that your comments have not received a fair hearing you should make your views known to the ASTM Committee on Standards, at the address shown below.

This standard is copyrighted by ASTM International, 100 Barr Harbor Drive, PO Box C700, West Conshohocken, PA 19428-2959, United States. Individual reprints (single or multiple copies) of this standard may be obtained by contacting ASTM at the above address or at 610-832-9585 (phone), 610-832-9555 (fax), or service@astm.org (e-mail); or through the ASTM website (www.astm.org).

ASTM D 698
STANDARD TEST METHODS FOR LABORATORY COMPACTION CHARACTERISTICS OF SOIL USING STANDARD EFFORT

Designation: D 698 – 07$^{\varepsilon 1}$

Standard Test Methods for Laboratory Compaction Characteristics of Soil Using Standard Effort (12 400 ft-lbf/ft^3 (600 kN-m/m^3))[1]

This standard is issued under the fixed designation D 698; the number immediately following the designation indicates the year of original adoption or, in the case of revision, the year of last revision. A number in parentheses indicates the year of last reapproval. A superscript epsilon (ε) indicates an editorial change since the last revision or reapproval.

This standard has been approved for use by agencies of the Department of Defense.

ε[1] NOTE—Figure 2 was editorially corrected in July 2007.

1. Scope*

1.1 These test methods cover laboratory compaction methods used to determine the relationship between molding water content and dry unit weight of soils (compaction curve) compacted in a 4 or 6-in. (101.6 or 152.4-mm) diameter mold with a 5.50-lbf (24.5-N) rammer dropped from a height of 12.0 in. (305 mm) producing a compactive effort of 12 400 ft-lbf/ft^3 (600 kN-m/m^3).

NOTE 1—The equipment and procedures are similar as those proposed by R. R. Proctor (*Engineering News Record*—September 7, 1933) with this one major exception: his rammer blows were applied as "12 inch firm strokes" instead of free fall, producing variable compactive effort depending on the operator, but probably in the range 15 000 to 25 000 ft-lbf/ft^3 (700 to 1200 kN-m/m^3). The standard effort test (see 3.1.3) is sometimes referred to as the Proctor Test.

1.1.1 Soils and soil-aggregate mixtures are to be regarded as natural occurring fine- or coarse-grained soils, or composites or mixtures of natural soils, or mixtures of natural and processed soils or aggregates such as gravel or crushed rock. Hereafter referred to as either soil or material.

1.2 These test methods apply only to soils (materials) that have 30 % or less by mass of particles retained on the ¾-in. (19.0-mm) sieve and have not been previously compacted in the laboratory; that is, do not reuse compacted soil.

1.2.1 For relationships between unit weights and molding water contents of soils with 30 % or less by mass of material retained on the ¾-in. (19.0-mm) sieve to unit weights and molding water contents of the fraction passing ¾-in. (19.0-mm) sieve, see Practice D 4718.

1.3 Three alternative methods are provided. The method used shall be as indicated in the specification for the material being tested. If no method is specified, the choice should be based on the material gradation.

1.3.1 *Method A*:

1.3.1.1 *Mold*—4-in. (101.6-mm) diameter.

1.3.1.2 *Material*—Passing No. 4 (4.75-mm) sieve.

1.3.1.3 *Layers*—Three.

1.3.1.4 *Blows per Layer*—25.

1.3.1.5 *Usage*—May be used if 25 % or less (see Section 1.4) by mass of the material is retained on the No. 4 (4.75-mm) sieve.

1.3.1.6 *Other Usage*—If this gradation requirement cannot be met, then Method C may be used.

1.3.2 *Method B*:

1.3.2.1 *Mold*—4-in. (101.6-mm) diameter.

1.3.2.2 *Material*—Passing ⅜-in. (9.5-mm) sieve.

1.3.2.3 *Layers*—Three.

1.3.2.4 *Blows per Layer*—25.

1.3.2.5 *Usage*—May be used if 25 % or less (see Section 1.4) by mass of the material is retained on the ⅜-in. (9.5-mm) sieve.

1.3.2.6 *Other Usage*—If this gradation requirement cannot be met, then Method C may be used.

1.3.3 *Method C*:

1.3.3.1 *Mold*—6-in. (152.4-mm) diameter.

1.3.3.2 *Material*—Passing ¾-in. (19.0-mm) sieve.

1.3.3.3 *Layers*—Three.

1.3.3.4 *Blows per Layer*—56.

1.3.3.5 *Usage*—May be used if 30 % or less (see Section 1.4) by mass of the material is retained on the ¾-in. (19.0-mm) sieve.

1.3.4 The 6-in. (152.4-mm) diameter mold shall not be used with Method A or B.

NOTE 2—Results have been found to vary slightly when a material is tested at the same compactive effort in different size molds, with the smaller mold size typically yielding larger values of density/unit weight (**1**, pp. 21+).[2]

1.4 If the test specimen contains more than 5 % by mass of oversize fraction (coarse fraction) and the material will not be included in the test, corrections must be made to the unit mass

[1] These Test Methods are under the jurisdiction of ASTM Committee D18 on Soil and Rock and are the direct responsibility of Subcommittee D18.03 on Texture, Plasticity and Density Characteristics of Soils.

Current edition approved April 15, 2007. Published July 2007. Originally approved in 1942. Last previous edition approved in 2000 as D 698 – 00a$^{\varepsilon 1}$.

[2] The boldface numbers in parentheses refer to the list of references at the end of this standard.

***A Summary of Changes section appears at the end of this standard.**

Copyright © ASTM International, 100 Barr Harbor Drive, PO Box C700, West Conshohocken, PA 19428-2959, United States.

and molding water content of the specimen or to the appropriate field-in-place density test specimen using Practice D 4718.

1.5 This test method will generally produce a well-defined maximum dry unit weight for non-free draining soils. If this test method is used for free-draining soils the maximum unit weight may not be well defined, and can be less than obtained using Test Methods D 4253.

1.6 All observed and calculated values shall conform to the guidelines for significant digits and rounding established in Practice D 6026, unless superseded by this standard.

1.6.1 For purposes of comparing measured or calculated value(s) with specified limits, the measured or calculated value(s) shall be rounded to the nearest decimal or significant digits in the specified limits.

1.6.2 The procedures used to specify how data are collected/recorded or calculated, in this standard are regarded as the industry standard. In addition, they are representative of the significant digits that generally should be retained. The procedures used do not consider material variation, purpose for obtaining the data, special purpose studies, or any considerations for the user's objectives; and it is common practice to increase or reduce significant digits of reported data to be commensurate with these considerations. It is beyond the scope of this standard to consider significant digits used in analytical methods for engineering design.

1.7 The values in inch-pound units are to be regarded as the standard. The values stated in SI units are provided for information only, except for units of mass. The units for mass are given in SI units only, g or kg.

1.7.1 It is common practice in the engineering profession to concurrently use pounds to represent both a unit of mass (lbm) and a force (lbf). This implicitly combines two separate systems of units; that is, the absolute system and the gravitational system. It is scientifically undesirable to combine the use of two separate sets of inch-pound units within a single standard. This standard has been written using the gravitational system of units when dealing with the inch-pound system. In this system, the pound (lbf) represents a unit of force (weight). However, the use of balances or scales recording pounds of mass (lbm) or the recording of density in lbm/ft^3 shall not be regarded as a nonconformance with this standard.

1.8 *This standard does not purport to address all of the safety concerns, if any, associated with its use. It is the responsibility of the user of this standard to establish appropriate safety and health practices and determine the applicability of regulatory limitations prior to use.*

2. Referenced Documents

2.1 *ASTM Standards:* [3]

C 127 Test Method for Density, Relative Density (Specific Gravity), and Absorption of Coarse Aggregate

C 136 Test Method for Sieve Analysis of Fine and Coarse Aggregates

D 653 Terminology Relating to Soil, Rock, and Contained Fluids

D 854 Test Methods for Specific Gravity of Soil Solids by Water Pycnometer

D 2168 Test Methods for Calibration of Laboratory Mechanical-Rammer Soil Compactors

D 2216 Test Methods for Laboratory Determination of Water (Moisture) Content of Soil and Rock by Mass

D 2487 Practice for Classification of Soils for Engineering Purposes (Unified Soil Classification System)

D 2488 Practice for Description and Identification of Soils (Visual-Manual Procedure)

D 3740 Practice for Minimum Requirements for Agencies Engaged in Testing and/or Inspection of Soil and Rock as Used in Engineering Design and Construction

D 4253 Test Methods for Maximum Index Density and Unit Weight of Soils Using a Vibratory Table

D 4718 Practice for Correction of Unit Weight and Water Content for Soils Containing Oversize Particles

D 4753 Guide for Evaluating, Selecting, and Specifying Balances and Standard Masses for Use in Soil, Rock, and Construction Materials Testing

D 4914 Test Methods for Density and Unit Weight of Soil and Rock in Place by the Sand Replacement Method in a Test Pit

D 5030 Test Method for Density of Soil and Rock in Place by the Water Replacement Method in a Test Pit

D 6026 Practice for Using Significant Digits in Geotechnical Data

D 6913 Test Methods for Particle-Size Distribution (Gradation) of Soils Using Sieve Analysis

E 11 Specification for Wire Cloth and Sieves for Testing Purposes

E 177 Practice for Use of the Terms Precision and Bias in ASTM Test Methods

E 691 Practice for Conducting an Interlaboratory Study to Determine the Precision of a Test Method

IEEE/ASTM SI 10 Standard for Use of the International System of Units (SI): the Modern Metric System

3. Terminology

3.1 *Definitions*—See Terminology D 653 for general definitions.

3.1.1 *molding water content, n*—the adjusted water content of a soil (material) that will be compacted/reconstituted.

3.1.2 *standard effort—in compaction testing*, the term for the 12 400 ft-lbf/ft^3 (600 kN-m/m^3) compactive effort applied by the equipment and methods of this test.

3.1.3 *standard maximum dry unit weight,* $\gamma_{d,max}$ in lbf/ft^3 (kN/m^3)—*in compaction testing*, the maximum value defined by the compaction curve for a compaction test using standard effort.

3.1.4 *standard optimum water content,* w_{opt} in %—*in compaction testing*, the molding water content at which a soil can be compacted to the maximum dry unit weight using standard compactive effort.

3.2 *Definitions of Terms Specific to This Standard:*

3.2.1 *oversize fraction (coarse fraction),* P_C in %—the portion of total specimen not used in performing the compaction

[3] For referenced ASTM standards, visit the ASTM website, www.astm.org, or contact ASTM Customer Service at service@astm.org. For *Annual Book of ASTM Standards* volume information, refer to the standard's Document Summary page on the ASTM website.

test; it may be the portion of total specimen retained on the No. 4 (4.75-mm) sieve in Method A, ⅜-in. (9.5-mm) sieve in Method B, or ¾-in. (19.0-mm) sieve in Method C.

3.2.2 *test fraction (finer fraction)*, P_F in %—the portion of the total specimen used in performing the compaction test; it is the fraction passing the No. 4 (4.75-mm) sieve in Method A, passing the ⅜-in. (9.5-mm) sieve in Method B, or passing the ¾-in. (19.0-mm) sieve in Method C.

4. Summary of Test Method

4.1 A soil at a selected molding water content is placed in three layers into a mold of given dimensions, with each layer compacted by 25 or 56 blows of a 5.50-lbf (24.47-N) rammer dropped from a distance of 12.00 in. (304.8 mm), subjecting the soil to a total compactive effort of about 12 400 ft-lbf/ft^3 (600 kN-m/m^3). The resulting dry unit weight is determined. The procedure is repeated for a sufficient number of molding water contents to establish a relationship between the dry unit weight and the molding water content for the soil. This data, when plotted, represents a curvilinear relationship known as the compaction curve. The values of optimum water content and standard maximum dry unit weight are determined from the compaction curve.

5. Significance and Use

5.1 Soil placed as engineering fill (embankments, foundation pads, road bases) is compacted to a dense state to obtain satisfactory engineering properties such as, shear strength, compressibility, or permeability. In addition, foundation soils are often compacted to improve their engineering properties. Laboratory compaction tests provide the basis for determining the percent compaction and molding water content needed to achieve the required engineering properties, and for controlling construction to assure that the required compaction and water contents are achieved.

5.2 During design of an engineered fill, shear, consolidation, permeability, or other tests require preparation of test specimens by compacting at some molding water content to some unit weight. It is common practice to first determine the optimum water content (w_{opt}) and maximum dry unit weight ($\gamma_{d,max}$) by means of a compaction test. Test specimens are compacted at a selected molding water content (w), either wet or dry of optimum (w_{opt}) or at optimum (w_{opt}), and at a selected dry unit weight related to a percentage of maximum dry unit weight ($\gamma_{d,max}$). The selection of molding water content (w), either wet or dry of optimum (w_{opt}) or at optimum (w_{opt}) and the dry unit weight ($\gamma_{d,max}$) may be based on past experience, or a range of values may be investigated to determine the necessary percent of compaction.

5.3 Experience indicates that the methods outlined in 5.2 or the construction control aspects discussed in 5.1 are extremely difficult to implement or yield erroneous results when dealing with certain soils. 5.3.1-5.3.3 describe typical problem soils, the problems encountered when dealing with such soils and possible solutions for these problems.

5.3.1 *Oversize Fraction*—Soils containing more than 30 % oversize fraction (material retained on the ¾-in. (19-mm) sieve) are a problem. For such soils, there is no ASTM test method to control their compaction and very few laboratories are equipped to determine the laboratory maximum unit weight (density) of such soils (USDI Bureau of Reclamation, Denver, CO and U.S. Army Corps of Engineers, Vicksburg, MS). Although Test Methods D 4914 and D 5030 determine the "field" dry unit weight of such soils, they are difficult and expensive to perform.

5.3.1.1 One method to design and control the compaction of such soils is to use a test fill to determine the required degree of compaction and the method to obtain that compaction, followed by use of a method specification to control the compaction. Components of a method specification typically contain the type and size of compaction equipment to be used, the lift thickness, acceptable range in molding water content, and the number of passes.

NOTE 3—Success in executing the compaction control of an earthwork project, especially when a method specification is used, is highly dependent upon the quality and experience of the contractor and inspector.

5.3.1.2 Another method is to apply the use of density correction factors developed by the USDI Bureau of Reclamation **(2,3)** and U.S. Corps of Engineers **(4)**. These correction factors may be applied for soils containing up to about 50 to 70 % oversize fraction. Each agency uses a different term for these density correction factors. The USDI Bureau of Reclamation uses *D* ratio (or *D*–VALUE), while the U.S. Corps of Engineers uses Density Interference Coefficient (I_c).

5.3.1.3 The use of the replacement technique (Test Method D 698–78, Method D), in which the oversize fraction is replaced with a finer fraction, is inappropriate to determine the maximum dry unit weight, $\gamma_{d,max}$, of soils containing oversize fractions **(4)**.

5.3.2 *Degradation*—Soils containing particles that degrade during compaction are a problem, especially when more degradation occurs during laboratory compaction than field compaction, as is typical. Degradation typically occurs during the compaction of a granular-residual soil or aggregate. When degradation occurs, the maximum dry-unit weight increases (**1**, p. 73) so that the laboratory maximum value is not representative of field conditions. Often, in these cases, the maximum dry unit weight is impossible to achieve in the field.

5.3.2.1 Again, for soils subject to degradation, the use of test fills and method specifications may help. Use of replacement techniques is not correct.

5.3.3 *Gap Graded*—Gap-graded soils (soils containing many large particles with limited small particles) are a problem because the compacted soil will have larger voids than usual. To handle these large voids, standard test methods (laboratory or field) typically have to be modified using engineering judgement.

NOTE 4—The quality of the result produced by this standard is dependent on the competence of the personnel performing it, and the suitability of the equipment and facilities used. Agencies that meet the criteria of Practice D 3740 are generally considered capable of competent and objective testing/sampling/inspection, and the like. Users of this standard are cautioned that compliance with Practice D 3740 does not in itself assure reliable results. Reliable results depend on many factors; Practice D 3740 provides a means of evaluating some of those factors.

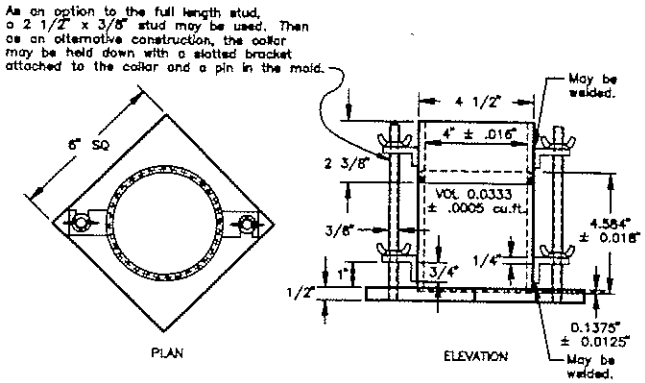

FIG. 1 4.0-in. Cylindrical Mold

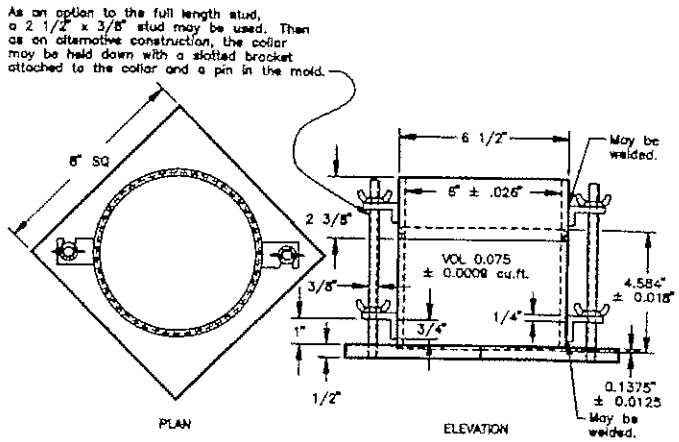

FIG. 2 6.0-in. Cylindrical Mold

6. Apparatus

6.1 *Mold Assembly*—The molds shall be cylindrical in shape, made of rigid metal and be within the capacity and dimensions indicated in 6.1.1 or 6.1.2 and Figs. 1 and 2. See also Table 1. The walls of the mold may be solid, split, or tapered. The "split" type may consist of two half-round sections, or a section of pipe split along one element, which can be securely locked together to form a cylinder meeting the requirements of this section. The "tapered" type shall have an internal diameter taper that is uniform and not more than 0.200 in./ft (16.7 mm/m) of mold height. Each mold shall have a base plate and an extension collar assembly, both made of rigid metal and constructed so they can be securely attached and easily detached from the mold. The extension collar assembly shall have a height extending above the top of the mold of at least 2.0 in. (51 mm) which may include an upper section that flares out to form a funnel, provided there is at least a 0.75 in. (19 mm) straight cylindrical section beneath it. The extension collar shall align with the inside of the mold. The bottom of the base plate and bottom of the centrally recessed area that accepts the cylindrical mold shall be planar within ±0.005 in. (±0.1 mm).

6.1.1 *Mold, 4 in.*—A mold having a 4.000 ± 0.016-in. (101.6 ± 0.4-mm) average inside diameter, a height of 4.584 ± 0.018 in. (116.4 ± 0.5 mm) and a volume of 0.0333 ± 0.0005 ft^3 (943.0 ± 14 cm^3). A mold assembly having the minimum required features is shown in Fig. 1.

6.1.2 *Mold, 6 in.*—A mold having a 6.000 ± 0.026-in. (152.4 ± 0.7-mm) average inside diameter, a height of 4.584 ± 0.018 in. (116.4 ± 0.5 mm), and a volume of 0.0750 ± 0.0009 ft^3 (2124 ± 25 cm^3). A mold assembly having the minimum required features is shown in Fig. 2.

6.2 *Rammer*—A rammer, either manually operated as described further in 6.2.1 or mechanically operated as described in 6.2.2. The rammer shall fall freely through a distance of 12.00 ± 0.05 in. (304.8 ± 1 mm) from the surface of the specimen. The weight of the rammer shall be 5.50 ± 0.02 lbf (24.47 ± 0.09 N, or mass of 2.495 ± 0.023 kg), except that the weight of the mechanical rammers may be adjusted as described in Test Methods D 2168; see Note 5. The striking face of the rammer shall be planar and circular, except as noted in 6.2.2.1, with a diameter when new of 2.000 ± 0.005 in. (50.80 ± 0.13 mm). The rammer shall be replaced if the striking face becomes worn or bellied to the extent that the diameter exceeds 2.000 ± 0.01 in. (50.80 ± 0.25 mm).

TABLE 1 Metric Equivalents for Figs. 1 and 2

in.	mm
0.016	0.41
0.026	0.66
0.032	0.81
0.028	0.71
½	12.70
2½	63.50
2⅝	66.70
4	101.60
4½	114.30
4.584	116.43
4¾	120.60
6	152.40
6½	165.10
6⅝	168.30
6¾	171.40
8¼	209.60
ft^3	cm^3
1/30 (0.0333)	943
0.0005	14
(0.0750)	2,124
0.0011	31

NOTE 5—It is a common and acceptable practice to determine the weight of the rammer using either a kilogram or pound balance and assume 1 lbf is equivalent to 0.4536 kg, 1 lbf is equivalent to 1 lbm, or 1 N is equivalent to 0.2248 lbf or 0.1020 kg.

6.2.1 *Manual Rammer*—The rammer shall be equipped with a guide sleeve that has sufficient clearance that the free fall of the rammer shaft and head is not restricted. The guide sleeve shall have at least four vent holes at each end (eight holes total) located with centers ¾ ± 1/16 in. (19 ± 2 mm) from each end and spaced 90 degrees apart. The minimum diameter of the vent holes shall be ⅜ in. (9.5 mm). Additional holes or slots may be incorporated in the guide sleeve.

6.2.2 *Mechanical Rammer-Circular Face*—The rammer shall operate mechanically in such a manner as to provide uniform and complete coverage of the specimen surface. There shall be 0.10 ± 0.03-in. (2.5 ± 0.8-mm) clearance between the rammer and the inside surface of the mold at its smallest diameter. The mechanical rammer shall meet the standardization/calibration requirements of Test Methods

D 2168. The mechanical rammer shall be equipped with a positive mechanical means to support the rammer when not in operation.

6.2.2.1 *Mechanical Rammer-Sector Face*—The sector face shall be used with the 6-in. (152.4-mm) mold, in place of the circular face rammer. The striking face shall have the shape of a sector of a circle of radius equal to 2.90 ± 0.02.in. (73.7 ± 0.5.mm) and an area about the same as the circular face, see 6.2. The rammer shall operate in such a manner that the vertex of the sector is positioned at the center of the specimen.

6.3 *Sample Extruder (optional)*—A jack, with frame or other device adapted for the purpose of extruding compacted specimens from the mold.

6.4 *Balance*—A Class GP5 balance meeting the requirements of Specification D 4753 for a balance of 1-g readability. If the water content of the compacted specimens is determined using a representative portion of the specimen, rather than the whole specimen, and if the representative portion is less than 1000 g, a Class GP2 balance having a 0.1-g readability is needed in order to comply with Test Methods D 2216 requirements for determining water content to 0.1 %.

NOTE 6—Use of a balance having an equivalent capacity and a readability of 0.002 lbm as an alternative to a class GP5 balance should not be regarded as nonconformance to this standard.

6.5 *Drying Oven*—Thermostatically controlled oven, capable of maintaining a uniform temperature of 230 ± 9°F (110 ± 5°C) throughout the drying chamber. These requirements typically require the use of a forced-draft type oven. Preferably the oven should be vented outside the building.

6.6 *Straightedge*—A stiff metal straightedge of any convenient length but not less than 10 in. (250 mm). The total length of the straightedge shall be machined straight to a tolerance of ± 0.005 in. (± 0.1 mm). The scraping edge shall be beveled if it is thicker than ⅛ in. (3 mm).

6.7 *Sieves*—¾ in. (19.0 mm), ⅜ in. (9.5 mm), and No. 4 (4.75 mm), conforming to the requirements of Specification E 11.

6.8 *Mixing Tools*—Miscellaneous tools such as mixing pan, spoon, trowel, spatula, spraying device (to add water evenly), and (preferably, but optional) suitable mechanical device for thoroughly mixing the subspecimen of soil with increments of water.

7. Standardization/Calibration

7.1 Perform standardizations before initial use, after repairs or other occurrences that might affect the test results, at intervals not exceeding 1,000 test specimens, or annually, whichever occurs first, for the following apparatus:

7.1.1 *Balance*—Evaluate in accordance with Specification D 4753.

7.1.2 *Molds*—Determine the volume as described in Annex A1.

7.1.3 *Manual Rammer*—Verify the free fall distance, rammer weight, and rammer face are in accordance with 6.2. Verify the guide sleeve requirements are in accordance with 6.2.1.

7.1.4 *Mechanical Rammer*—Verify and adjust if necessary that the mechanical rammer is in accordance with Test Method D 2168. In addition, the clearance between the rammer and the inside surface of the mold shall be verified in accordance with 6.2.2.

8. Test Specimen

8.1 The minimum specimen (test fraction) mass for Methods A and B is about 16 kg, and for Method C is about 29 kg of dry soil. Therefore, the field sample should have a moist mass of at least 23 kg and 45 kg, respectively. Greater masses would be required if the oversize fraction is large (see 10.2 or 10.3) or an additional molding water content is taken during compaction of each point (see 10.4.2.1).

8.2 If gradation data is not available, estimate the percentage of material (by mass) retained on the No. 4 (4.75-mm), ⅜-in. (9.5-mm), or ¾-in. (19.0-mm) sieve as appropriate for selecting Method A, B, or C, respectively. If it appears the percentage retained of interest is close to the allowable value for a given Method (A, B, or C), then either:

8.2.1 Select a Method that allows a higher percentage retained (B or C).

8.2.2 Using the Method of interest, process the specimen in accordance with 10.2 or 10.3, this determines the percentage retained for that method. If acceptable, proceed, if not go to the next Method (B or C).

8.2.3 Determine percentage retained values by using a representative portion from the total sample, and performing a simplified or complete gradation analysis using the sieve(s) of interest and Test Method D 6913 or C 136. It is only necessary to calculate the retained percentage(s) for the sieve or sieves for which information is desired.

9. Preparation of Apparatus

9.1 Select the proper compaction mold(s), collar, and base plate in accordance with the Method (A, B, or C) being used. Check that its volume is known and determined with or without base plate, free of nicks or dents, and will fit together properly.

NOTE 7—Mass requirements are given in 10.4.

9.2 Check that the manual or mechanical rammer assembly is in good working condition and that parts are not loose or worn. Make any necessary adjustments or repairs. If adjustments or repairs are made, the rammer must be re-standardized.

10. Procedure

10.1 *Soils*:

10.1.1 Do not reuse soil that has been previously compacted in the laboratory. The reuse of previously compacted soil yields a significantly greater maximum dry unit weight (**1**, p. 31).

10.1.2 When using this test method for soils containing hydrated halloysite, or in which past experience indicates that results will be altered by air-drying, use the moist preparation method (see 10.2). In referee testing, each laboratory has to use the same method of preparation, either moist (preferred) or air-dried.

10.1.3 Prepare the soil specimens for testing in accordance with 10.2 (preferred) or with 10.3.

10.2 *Moist Preparation Method (preferred)*—Without previously drying the sample/specimen, process it over a No. 4

(4.75-mm), ⅜-in. (9.5-mm), or ¾-in. (19.0-mm) sieve, depending on the Method (A, B, or C) being used or required as covered in 8.2. For additional processing details, see Test Method D 6913. Determine and record the mass of both the retained and passing portions (oversize fraction and test fraction, respectively) to the nearest g. Oven dry the oversize fraction and determine and record its dry mass to the nearest g. If it appears more than 0.5 % of the total dry mass of the specimen is adhering to the oversize fraction, wash that fraction. Then determine and record its oven dry mass to the nearest g. Determine and record the water content of the processed soil (test fraction). Using that water content, determine and record the oven dry mass of the test fraction to the nearest g. Based on these oven dry masses, the percent oversize fraction, P_C, and test fraction, P_F, shall be determined and recorded, unless a gradation analysis has already been performed, see Section 11 on Calculations.

10.2.1 From the test fraction, select and prepare at least four (preferably five) subspecimens having molding water contents such that they bracket the estimated optimum water content. A subspecimen having a molding water content close to optimum should be prepared first by trial additions or removals of water and mixing (see Note 8). Select molding water contents for the rest of the subspecimens to provide at least two subspecimens wet and two subspecimens dry of optimum, and molding water contents varying by about 2 %. At least two molding water contents are necessary on the wet and dry side of optimum to define the dry-unit-weight compaction curve (see 10.5). Some soils with very high optimum water content or a relatively flat compaction curve may require larger molding water content increments to obtain a well-defined maximum dry unit weight. Molding water content increments should not exceed about 4 %.

NOTE 8—With practice it is usually possible to visually judge a point near optimum water content. Typically, cohesive soils at the optimum water content can be squeezed into a lump that sticks together when hand pressure is released, but will break cleanly into two sections when "bent." They tend to crumble at molding water contents dry of optimum; while, they tend to stick together in a sticky cohesive mass wet of optimum. The optimum water content is typically slightly less than the plastic limit. While for cohesionless soils, the optimum water content is typically close to zero or at the point where bleeding occurs.

10.2.2 Thoroughly mix the test fraction, then using a scoop select representative soil for each subspecimen (compaction point). Select about 2.3 kg when using Method A or B, or about 5.9 kg for Method C. Test Method D 6913 section on Specimen and Annex A2 gives additional details on obtaining representative soil using this procedure and why it is the preferred method. To obtain the subspecimen's molding water contents selected in 10.2.1, add or remove the required amounts of water as follows. To add water, spray it into the soil during mixing; to remove water, allow the soil to dry in air at ambient temperature or in a drying apparatus such that the temperature of the sample does not exceed 140°F (60°C). Mix the soil frequently during drying to facilitate an even water content distribution. Thoroughly mix each subspecimen to facilitate even distribution of water throughout and then place in a separate covered container to stand (cure) in accordance with Table 2 prior to compaction. For selecting a standing time, the soil may be classified using Practice D 2487, Practice D 2488 or data on other samples from the same material source. For referee testing, classification shall be by Practice D 2487.

TABLE 2 Required Standing Times of Moisturized Specimens

Classification	Minimum Standing Time, h
GW, GP, SW, SP	No Requirement
GM, SM	3
All other soils	16

10.3 *Dry Preparation Method*—If the sample/specimen is too damp to be friable, reduce the water content by air drying until the material is friable. Drying may be in air or by the use of drying apparatus such that the temperature of the sample does not exceed 140°F (60°C). Thoroughly break up the aggregations in such a manner as to avoid breaking individual particles. Process the material over the appropriate sieve: No. 4 (4.75-mm), ⅜-in. (9.5-mm), or ¾-in. (19.0-mm). When preparing the material by passing over the ¾-in. sieve for compaction in the 6-in. mold, break up aggregations sufficiently to at least pass the ⅜-in. sieve in order to facilitate the distribution of water throughout the soil in later mixing. Determine and record the water content of the test fraction and all masses covered in 10.2, as applicable to determine the percent oversize fraction, P_C, and test fraction, P_F.

10.3.1 From the test fraction, select and prepare at least four (preferably five) subspecimens in accordance with 10.2.1 and 10.2.2, except for the following: Use either a mechanical splitting or quartering process to obtain the subspecimens. As stated in Test Method D 6913, both of these processes will yield non-uniform subspecimens compared to the moist procedure. Typically, only the addition of water to each subspecimen will be required.

10.4 *Compaction*—After standing (curing), if required, each subspecimen (compaction point) shall be compacted as follows:

10.4.1 Determine and record the mass of the mold or mold and base plate, see 10.4.7.

10.4.2 Assemble and secure the mold and collar to the base plate. Check the alignment of the inner wall of the mold and mold extension collar. Adjust if necessary. The mold shall rest, without wobbling/rocking on a uniform rigid foundation, such as provided by a cylinder or cube of concrete with a weight or mass of not less than 200-lbf or 91-kg, respectively. Secure the base plate to the rigid foundation. The method of attachment to the rigid foundation shall allow easy removal of the assembled mold, collar and base plate after compaction is completed.

10.4.2.1 During compaction, it is advantageous but not required to determine the water content of each subspecimen. This provides a check on the molding water content determined for each compaction point and the magnitude of bleeding, see 10.4.9. However, more soil will have to be selected for each subspecimen than stated in 10.2.2.

10.4.3 Compact the soil in three layers. After compaction, each layer should be approximately equal in thickness and extend into the collar. Prior to compaction, place the loose soil into the mold and spread into a layer of uniform thickness. Lightly tamp the soil prior to compaction until it is not in a fluffy or loose state, using either the manual rammer or a

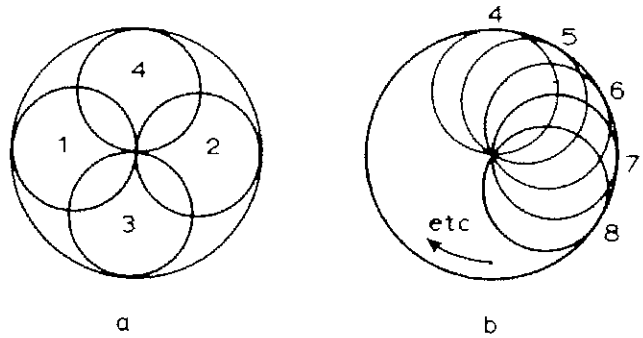

FIG. 3 Rammer Pattern for Compaction in 4 in. (101.6 mm) Mold

2±-in. (50±-mm) diameter cylinder. Following compaction of each of the first two layers, any soil that has not been compacted; such as adjacent to the mold walls or extends above the compacted surface (up the mold walls) shall be trimmed. The trimmed soil shall be discarded. A knife or other suitable device may be used. The total amount of soil used shall be such that the third compacted layer slightly extends into the collar, but does not extend more than approximately ¼-in. (6-mm) above the top of the mold. If the third layer does extend above this limit, then the compaction point shall be discarded. In addition, the compaction point shall be discarded when the last blow on the rammer for the third layer results in the bottom of the rammer extending below the top of the compaction mold; unless the soil is pliable enough, that this surface can easily be forced above the top of the compaction mold during trimming (see Note 9).

10.4.4 Compact each layer with 25 blows for the 4-in. (101.6-mm) mold or with 56 blows for the 6-in. (152.4-mm) mold. The manual rammer shall be used for referee testing.

10.4.5 In operating the manual rammer, take care to avoid lifting the guide sleeve during the rammer upstroke. Hold the guide sleeve steady and within 5° of vertical. Apply the blows at a uniform rate of about 25 blows/min and in such a manner as to provide complete, uniform coverage of the specimen surface. When using a 4-in. (101.6-mm) mold and manual rammer, follow the blow pattern given in Fig. 3a and Fig. 3b; while for a mechanical rammer, follow the pattern in Fig. 3b. When using a 6-in. (152.4-mm) mold and manual rammer, follow the blow pattern given in Fig. 4 up to the 9th blow, then systematically around the mold (Fig. 3b) and in the middle; while for a mechanical rammer use a sector face and a pattern having the logic given in Fig. 3b. If the surface of the compacted soil becomes highly uneven (see Note 9), then adjust the pattern to follow the logic given in Fig. 3a or Fig. 4. This will most likely void the use of a mechanical rammer for such compaction points.

NOTE 9—When compacting specimens wetter than optimum water content, uneven compacted surfaces can occur and operator judgement is required as to the average height of the specimen and rammer pattern during compaction.

10.4.6 Following compaction of the last layer, remove the collar and base plate (except as noted in 10.4.7) from the mold. A knife may be used to trim the soil adjacent to the collar to loosen the soil from the collar before removal to avoid disrupting the soil below the top of the mold. In addition, to prevent/reduce soil sticking to the collar or base plate, rotate them before removal.

10.4.7 Carefully trim the compacted specimen even with the top of the mold by means of the straightedge scraped across the top of the mold to form a plane surface even with the top of the mold. Initial trimming of the specimen above the top of the mold with a knife may prevent the soil from tearing below the top of the mold. Fill any holes in the top surface with unused or trimmed soil from the specimen, press in with the fingers, and again scrape the straightedge across the top of the mold. If gravel size particles are encountered, trim around them or remove them, whichever is the easiest and reduces the disturbance of the compacted soil. The estimated volume of particles above the surface of the compacted soil and holes in that surface shall be equal, fill in remaining holes as mentioned above. Repeat the appropriate preceding operations on the bottom of the specimen when the mold volume was determined without the base plate. For very wet or dry soils, soil or water may be lost if the base plate is removed. For these situations, leave the base plate attached to the mold. When the base plate is left attached, the volume of the mold must be calibrated with the base plate attached to the mold rather than a plastic or glass plate as noted in Annex A1, A1.4.

10.4.8 Determine and record the mass of the specimen and mold to the nearest g. When the base plate is left attached, determine and record the mass of the specimen, mold and base plate to the nearest g.

10.4.9 Remove the material from the mold. Obtain a specimen for molding water content by using either the whole specimen (preferred method) or a representative portion. When the entire specimen is used, break it up to facilitate drying. Otherwise, obtain a representative portion of the three layers, removing enough material from the specimen to report the water content to 0.1 %. The mass of the representative portion of soil shall conform to the requirements of Table 1, Method B, of Test Methods D 2216. Determine the molding water content in accordance with Test Methods D 2216.

10.5 Following compaction of the last specimen, compare the wet unit weights to ensure that a desired pattern of obtaining data on each side of the optimum water content will be attained for the dry-unit-weight compaction curve. Plotting the wet unit weight and molding water content of each compacted specimen can be an aid in making the above

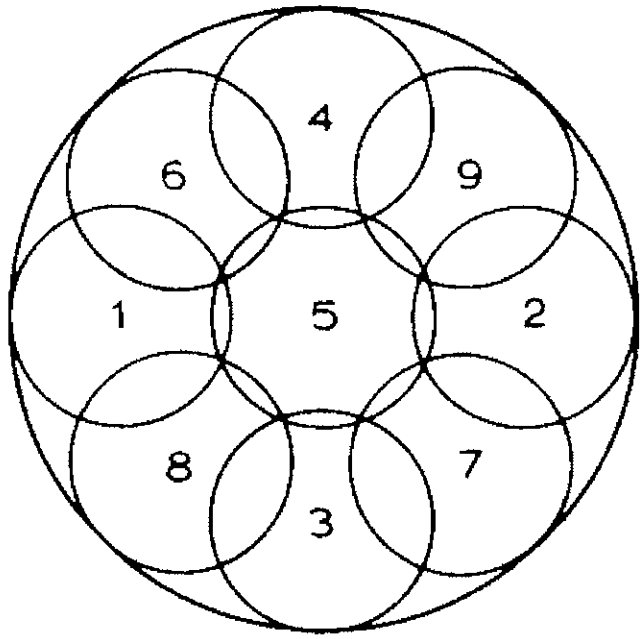

FIG. 4 Rammer Pattern for Compaction in 6 in. (152.4 mm) Mold

evaluation. If the desired pattern is not obtained, additional compacted specimens will be required. Generally, for experienced plotters of compaction curves, one compaction point wet of the optimum water content is adequate to define the maximum wet unit weight, see 11.2.

11. Calculations and Plotting (Compaction Curve)

11.1 *Fraction Percentages*—If gradation data from Test Method D 6913 is not available, calculate the dry mass of the test fraction, percentage of oversize fraction and test fraction as covered below and using the data from 10.2 or 10.3:

11.1.1 *Test Fraction*—Determine the dry mass of the test fraction as follows:

$$M_{d,tf} = \frac{M_{m,tf}}{1 + \frac{w_{tf}}{100}} \quad (1)$$

where:

$M_{d,tf}$ = dry mass of test fraction, nearest g or 0.001 kg,
$M_{m,tf}$ = moist mass of test fraction, nearest g or 0.001 kg, and
w_{tf} = water content of test fraction, nearest 0.1 %.

11.1.2 *Oversize Fraction Percentage*—Determine the oversize (coarse) fraction percentage as follows:

$$P_C = \frac{M_{d,of}}{M_{d,of} + M_{d,tf}} \quad (2)$$

where:

P_C = percentage of oversize (coarse) fraction, nearest %, and
$M_{d,of}$ = dry mass of oversize fraction, nearest g or 0.001 kg,

11.1.3 *Test Fraction Percentage*—Determine the test (finer) fraction percentage as follows:

$$P_F = 100 - P_C \quad (3)$$

where:

P_F = percentage of test (finer) fraction, nearest %.

11.2 *Density and Unit Weight*—Calculate the molding water content, moist density, dry density, and dry unit weight of each compacted specimen as explained below.

11.2.1 *Molding Water Content, w*—Calculate in accordance with Test Methods D 2216 to nearest 0.1 %.

11.2.2 *Density and Unit Weights*—Calculate the moist (total) density (Eq 4), the dry density (Eq 5), and then the dry unit weight (Eq 6) as follows:

11.2.2.1 *Moist Density*:

$$\rho_m = K \times \frac{(M_t - M_{md})}{V} \quad (4)$$

where:

ρ_m = moist density of compacted subspecimen (compaction point), four significant digits, g/cm^3 or kg/m^3,
M_t = mass of moist soil in mold and mold, nearest g,
M_{md} = mass of compaction mold, nearest g,
V = volume of compaction mold, cm^3 or m^3 (see Annex A1), and
K = conversion constant, depending on density units and volume units.
Use 1 for g/cm^3 and volume in cm^3.
Use 1000 for g/cm^3 and volume in m^3.
Use 0.001 for kg/cm^3 and volume in m^3.
Use 1000 for kg/m^3 and volume in cm^3.

11.2.2.2 *Dry Density*:

$$\rho_d = \frac{\rho_m}{1 + \frac{w}{100}} \quad (5)$$

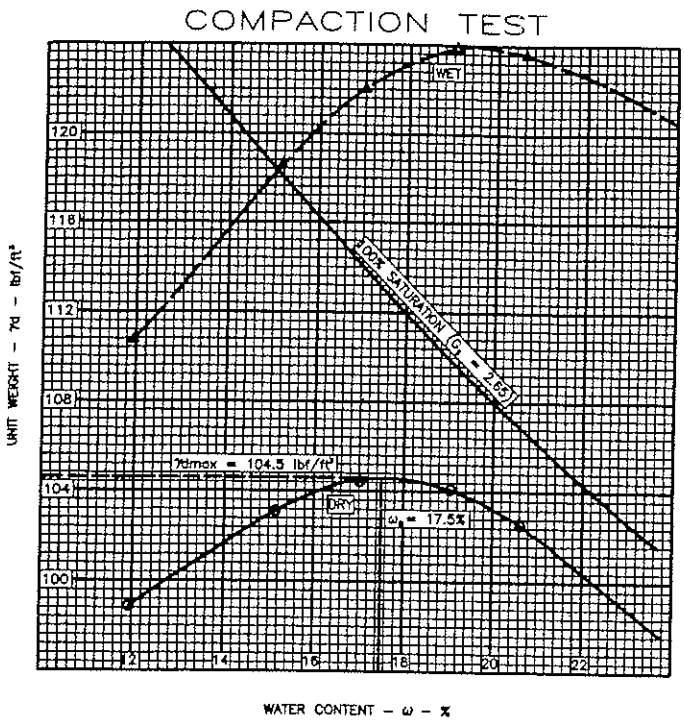

FIG. 5 Example Compaction Curve Plotting

where:

ρ_d = dry density of compaction point, four significant digits, g/cm^3 or kg/m^3, and

w = molding water content of compaction point, nearest 0.1 %.

11.2.2.3 *Dry Unit Weight*:

$$\gamma_d = K_1 \times \rho_d \text{ in lbf/ft}^3 \quad (6)$$

or

$$\gamma_d = K_2 \times \rho_d \text{ in kN/m}^3 \quad (7)$$

where:

γ_d = dry unit weight of compacted specimen, four significant digits, in lbf/ft^3 or kN/m^3,

K_1 = conversion constant, depending on density units, Use 62.428 for density in g/cm^3, or Use 0.062428 for density in kg/m^3,

K_2 = conversion constant, depending on density units, Use 9.8066 for density in g/cm^3, or Use 0.0098066 for density in kg/m^3.

11.3 *Compaction Curve*—Plot the dry unit weight and molding water content values, the saturation curve (see 11.3.2), and draw the compaction curve as a smooth curve through the points (see example, Fig. 5). For each point on the compaction curve, calculate, record, and plot dry unit weight to the nearest 0.1 lbf/ft^3 (0.02 kN/m^3) and molding water content to the nearest 0.1 %. From the compaction curve, determine the compaction results: optimum water content, to nearest 0.1 % and maximum dry unit weight, to the nearest 0.1 lbf/ft^3 (0.02 kN/m^3). If more than 5 % by mass of oversize material was removed from the sample/specimen, calculate the corrected optimum water content and maximum dry unit weight of the total material using Practice D 4718. This correction may be made to the appropriate field in-place density test specimen rather than to the laboratory compaction results.

11.3.1 In these plots, the scale sensitivities should remain the same, that is the change in molding water content or dry unit weight per division is constant between plots. Typically, the change in dry unit weight per division is twice that of molding water content's (2 lbf/ft^3 to 1 % w per major division). Therefore, any change in the shape of the compaction curve is a result of testing different material, not the plotting scale. However, a one to one ratio should be used for soils that have a relatively flat compaction curve (see 10.2.1), such as highly plastic soils or relatively free draining ones up to the point of bleeding.

11.3.1.1 The shape of the compaction curve on the wet side on optimum should typically follow that of the saturation curve. The shape of the compaction curve on the dry side of optimum may be relatively flat or up and down when testing some soils, such as relatively free draining ones or plastic soils prepared using the moist procedure and having molding water contents close to or less than the shrinkage limit.

11.3.2 Plot the 100 % saturation curve, based on either an estimated or a measured specific gravity. Values of water content for the condition of 100 % saturation can be calculated as explained in 11.4 (see example, Fig. 5).

NOTE 10—The 100 % saturation curve is an aid in drawing the compaction curve. For soils containing more than about 10 % fines and molding water contents well above optimum, the two curves generally become roughly parallel with the wet side of the compaction curve between 92 to 95 % saturation. Theoretically, the compaction curve cannot plot to the right of the 100 % saturation curve. If it does, there is an error in specific gravity, in measurements, in calculations, in testing, or in plotting. The 100 % saturation curve is sometimes referred to as the zero air voids curve or the complete saturation curve.

11.4 *Saturation Points*—To calculate points for plotting the 100 % saturation curve or zero air voids curve, select values of dry unit weight, calculate corresponding values of water content corresponding to the condition of 100 % saturation as follows:

$$w_{sat} = \frac{(\gamma_w)(G_s) - \gamma_d}{(\gamma_d)(G_s)} \times 100 \quad (8)$$

where:

w_{sat} = water content for complete saturation, nearest 0.1 %,

γ_w = unit weight of water, 62.32 lbf/ft^3 (9.789 kN/m^3) at 20°C,

γ_d = dry unit weight of soil, lbf/ft^3 (kN/m^3), three significant digits, and

G_s = specific gravity of soil (estimated or measured), to nearest 0.01 value, see 11.4.1.

11.4.1 Specific gravity may be estimated for the test fraction based on test data from other soils having the same soil classification and source or experience. Otherwise, a specific gravity test (Test Method C 127, Test Method D 854, or both) is necessary.

12. Report: Data Sheet(s)/Form(s)

12.1 The methodology used to specify how data are recorded on the test data sheet(s)/form(s), as described below, is covered in 1.6.

12.2 The data sheet(s)/form(s) shall contain as a minimum the following information:

12.2.1 Method used (A, B, or C).

12.2.2 Preparation method used (moist or dry).

12.2.3 As received water content if determined, nearest 1 %.

12.2.4 Standard optimum water content, Std-w_{opt} to nearest 0.1 %.

12.2.5 Standard maximum dry unit weight, Std-$\gamma_{d,max}$ nearest 0.1 lbf/ft^3 or 0.02 kN/m^3.

12.2.6 Type of rammer (manual or mechanical).

12.2.7 Soil sieve data when applicable for selection of Method (A, B, or C) used.

12.2.8 Description of sample used in test (as a minimum, color and group name and symbol), by Practice D 2488, or classification by Practice D 2487.

12.2.9 Specific gravity and method of determination, nearest 0.01 value.

12.2.10 Identification of sample used in test; for example, project number/name, location, depth, and the like.

12.2.11 Compaction curve plot showing compaction points used to establish compaction curve, and 100 % saturation curve, value or point of maximum dry unit weight and optimum water content.

12.2.12 Percentages for the fractions retained (P_C) and passing (P_F) the sieve used in Method A, B, or C, nearest 1 %. In addition, if compaction data (Std-w_{opt} and Std-$\gamma_{d,max}$) are corrected for the oversize fraction, include that data.

13. Precision and Bias

13.1 *Precision*—Criteria for judging the acceptability of test results obtained by these test methods on a range of soil types are given in Tables 3 and 4. These estimates of precision are based on the results of the interlaboratory program conducted by the ASTM Reference Soils and Testing Program.[4] In this program, Method A and the Dry Preparation Method were used. In addition, some laboratories performed three replicate tests per soil type (triplicate test laboratory), while other laboratories performed a single test per soil type (single test laboratory). A description of the soils tested is given in 13.1.4. The precision estimates vary with soil type, and may vary with methods used (Method A, B, or C, or wet/dry preparation method). Judgement is required when applying these estimates to another soil, method, or preparation method.

13.1.1 The data in Table 3 are based on three replicate tests performed by each triplicate test laboratory on each soil type. The single operator and multilaboratory standard deviation show in Table 3, Column 4 were obtained in accordance with Practice E 691, which recommends each testing laboratory perform a minimum of three replicate tests. Results of two properly conducted tests performed by the same operator on the same material, using the same equipment, and in the shortest practical period of time should not differ by more than the single-operator d2*s* shown in Table 3, Column 5. For definition of d2*s*, see footnote D in Table 1. Results of two properly conducted tests performed by different operators and on different days should not differ by more than the multilaboratory d2*s* limits shown in Table 3, Column 5.

13.1.2 In the ASTM Reference Soils and Testing Program, many of the laboratories performed only a single test on each soil type. This is common practice in the design and construction industry. The data for each soil type in Table 4 are based upon the first test result from the triplicate test laboratories and the single test results from the other laboratories. Results of two properly conducted tests performed by two different laboratories with different operators using different equipment and on different days should not vary by more than the d2*s* limits shown in Table 4, Column 5. The results in Tables 3 and 4 are dissimilar because the data sets are different.

TABLE 3 Summary of Test Results from Triplicate Test Laboratories (Standard Effort Compaction)

(1) Number of Triplicate Test Labs	(2) Test Value[A] (Units)	(3) Average Value[B]	(4) Standard Deviation[C]	(5) Acceptable Range of Two Results[D,E]
		Soil Type:		
CH CL ML		CH CL ML	CH CL ML	CH CL ML
Single-Operator Results (Within-Laboratory Repeatability):				
11 12 11	$\gamma_{d,max}$ (pcf)	97.2 109.2 106.3	0.5 0.4 0.5	1.3 1.2 1.3
11 12 11	w_{opt} (%)	22.8 16.6 17.1	0.2 0.3 0.3	0.7 0.9 0.9
Multilaboratory Results (Between-Laboratory Reproducibility):				
11 12 11	$\gamma_{d,max}$ (pcf)	97.2 109.2 106.3	1.4 0.8 0.6	3.9 2.3 1.6
11 12 11	w_{opt} (%)	22.8 16.6 17.1	0.7 0.5 0.5	1.8 1.5 1.3

[A] $\gamma_{d,max}$ (pcf) = standard maximum dry unit weight in lbf/ft^3 and w_{opt} (%) = standard optimum water in percent.

[B] The number of significant digits and decimal places presented are representative of the input data. In accordance with Practice D 6026, the standard deviation and acceptable range of results can not have more decimal places than the input data.

[C] Standard deviation is calculated in accordance with Practice E 691 and is referred to as the 1 s limit.

[D] Acceptable range of two results is referred to as the d2*s* limit. It is calculated as 1.960 $\sqrt{2} \cdot$ 1s, as defined by Practice E 177. The difference between two properly conducted tests should not exceed this limit. The number of significant digits/decimal places presented is equal to that prescribed by this standard or Practice D 6026. In addition, the value presented can have the same number of decimal places as the standard deviation, even if that result has more significant digits than the standard deviation.

[E] Both values of $\gamma_{d,max}$ and w_{opt} have to fall within values given for the selected soil type.

TABLE 4 Summary of Single Test Results from Each Laboratories (Standard Effort Compaction)[A]

(1) Number of Test Laboratories	(2) Test Value (Units)	(3) Average Value	(4) Standard Deviation	(5) Acceptable Range of Two Results
		Soil Type:		
CH CL ML		CH CL ML	CH CL ML	CH CL ML
Multilaboratory Results (Between-Laboratory Reproducibility):				
26 26 25	$\gamma_{d,max}$ (pcf)	97.3 109.2 106.2	1.6 1.1 1.0	4.5 3.0 2.9
	w_{opt} (%)	22.6 16.4 16.7	0.9 0.7 1.0	2.4 1.8 2.9

[A] See footnotes in Table 3.

[4] Research Report RR:D18-1008 contains the data and statistical analysis used to establish these precision statements and it is available from ASTM Headquarters.

13.1.3 Table 3 presents a rigorous interpretation of triplicate test data in accordance with Practice E 691 from pre-qualified laboratories. Table 4 is derived from test data that represents common practice.

13.1.4 *Soil Types*—Based on the multilaboratory test results the soils used in the program are described below in accordance with Practice D 2487. In addition, the local names of the soils are given.

CH Fat clay, CH, 99 % fines, LL=60, PI=39, grayish brown, soil had been air dried and pulverized. Local name—Vicksburg Buckshot Clay

CL Lean clay, CL, 89 % fines, LL=33, PI=13, gray, soil had been air dried and pulverized. Local name—Annapolis Clay

ML Silt, ML, 99 % fines, LL=27, PI=4, light brown, soil had been air dried and pulverized. Local name—Vicksburg Silt

13.2 *Bias*—There is no accepted reference values for this test method, therefore, bias cannot be determined.

14. Keywords

14.1 compaction characteristics; density; impact compaction; laboratory tests; moisture-density curves; proctor test; soil; soil compaction; standard effort

ANNEX

(Mandatory Information)

A1. VOLUME OF COMPACTION MOLD

A1.1 Scope

A1.1.1 This annex describes the procedure for determining the volume of a compaction mold.

A1.1.2 The volume is determined by two methods, a water-filled and linear-measurement method.

A1.1.3 The water filling method for the 4-in. (106.5-mm) mold, when using a balance readable to nearest g, does not yield four significant figures for its volume, just three. Based on Practice D 6026, this limits the density/unit weight determinations previously presented from four to three significant figures. To prevent this limitation, the water filling method has been adjusted from that presented in early versions of this test method.

A1.2 Apparatus

A1.2.1 In addition to the apparatus listed in Section 6 the following items are required:

A1.2.1.1 *Vernier or Dial Caliper*, having a measuring range of at least 0 to 6 in. (0 to 150 mm) and readable to at least 0.001 in. (0.02 mm).

A1.2.1.2 *Inside Micrometer (optional)*, having a measuring range of at least 2 to 12 in. (50 to 300 mm) and readable to at least 0.001 in. (0.02 mm).

A1.2.1.3 *Depth Micrometer (optional)*, having a measuring range of at least 0 to 6 in. (0 to 150 mm) and readable to at least 0.001 in. (0.02 mm).

A1.2.1.4 *Plastic or Glass Plates*—Two plastic or glass plates about 8 in. square by ¼ in. thick (200 by 200 by 6 mm).

A1.2.1.5 *Thermometer or Other Thermometric Device*, having graduation increments of 0.1°C.

A1.2.1.6 *Stopcock Grease*, or similar sealant.

A1.2.1.7 *Miscellaneous Equipment*—Bulb syringe, towels, etc.

A1.3 Precautions

A1.3.1 Perform this method in an area isolated from drafts or extreme temperature fluctuations.

A1.4 Procedure

A1.4.1 *Water-Filling Method*:

A1.4.1.1 Lightly grease the bottom of the compaction mold and place it on one of the plastic or glass plates. Lightly grease the top of the mold. Be careful not to get grease on the inside of the mold. If it is necessary to use the base plate, as noted in 10.4.7, place the greased mold onto the base plate and secure with the locking studs.

A1.4.1.2 Determine the mass of the greased mold and both plastic or glass plates to the nearest 1 g and record, M_{mp}. When the base plate is being used in lieu of the bottom plastic or glass plate, determine the mass of the mold, base plate and a single plastic or glass plate to be used on top of the mold to the nearest 1 g and record.

A1.4.1.3 Place the mold and the bottom plastic or glass plate on a firm, level surface and fill the mold with water to slightly above its rim.

A1.4.1.4 Slide the second plate over the top surface of the mold so that the mold remains completely filled with water and air bubbles are not entrapped. Add or remove water as necessary with a bulb syringe.

A1.4.1.5 Completely dry any excess water from the outside of the mold and plates.

A1.4.1.6 Determine the mass of the mold, plates and water and record to the nearest 1 g, $M_{mp,w}$.

A1.4.1.7 Determine the temperature of the water in the mold to the nearest 0.1°C and record. Determine and record the density of water from the table given in Test Method D 854 or as follows:

$$\rho_{w,c} = 1.00034038 - (7.77 \times 10^{-6}) \times T - (4.95 \times 10^{-6}) \times T^2 \quad \text{(A1.1)}$$

where:

$\rho_{w,c}$ = density of water, nearest 0.00001 g/cm^3, and
T = calibration test temperature, nearest 0.1°C.

A1.4.1.8 Calculate the mass of water in the mold by subtracting the mass determined in A1.4.1.2 from the mass determined in A1.4.1.6.

A1.4.1.9 Calculate the volume of water by dividing the mass of water by the density of water. Record this volume to the nearest 0.1 cm^3 for the 4-in. (101.6-mm) mold or nearest 1 cm^3 for the 6-in. (152.4-mm) mold. To determine the volume of the mold in m^3, multiply the volume in cm^3 by 1×10^{-6}. Record this volume, as prescribed.

A1.4.1.10 If the filling method is being used to determine the mold's volume and checked by linear measurement method, repeat this volume determination (A1.4.1.3-A1.4.1.9) and determine and record the average value, V_w as prescribed.

A1.4.2 *Linear Measurement Method*:

A1.4.2.1 Using either the vernier caliper or the inside micrometer (preferable), measure the inside diameter (ID) of the mold 6 times at the top of the mold and 6 times at the bottom of the mold, spacing each of the six top and bottom measurements equally around the ID of the mold. Record the values to the nearest 0.001-in. (0.02-mm). Determine and record the average ID to the nearest 0.001-in. (0.02-mm), d_{avg}. Verify that this ID is within specified tolerances, 4.000 ± 0.016 in. (101.6 ± 0.4 mm), if not discard the mold.

A1.4.2.2 Using the vernier caliper or depth micrometer (preferably), measure the inside height of the mold attached to the base plate. In these measurements, make three or more measurements equally spaced around the ID of the mold, and preferably one in the center of the mold, but not required (used the straightedge to facilitate the later measurement and correct measurement for thickness of straightedge). Record these values to the nearest 0.001-in. (0.02-mm). Determine and record the average of these height measurements to the nearest 0.001 in. (0.02 mm), h_{avg}. Verify that this height is within specified tolerances, 4.584 ± 0.018 in. (116.4 ± 0.5 mm), if not discard the mold.

A1.4.2.3 Calculate the volume of the mold to four significant digits in cm^3 as follows:

$$V_{lm} = K_3 \frac{\pi \times h_{avg} \times (d_{avg})^2}{4} \quad \text{(A1.2)}$$

where:

V_{lm} = volume of mold by linear measurements, to four significant digits, cm^3,

K_3 = constant to convert measurements made in inch (in.) or mm,
Use 16.387 for measurements in inches.
Use 10^{-6} for measurements in mm.

π = 3.14159,

h_{avg} = average height, in. (mm), and

d_{avg} = average of the top and bottom diameters, in. (mm).

A1.4.2.4 If the volume in m^3 is required, then multiply the above value by 10^{-6}.

A1.5 Comparison of Results and Standardized Volume of Mold

A1.5.1 The volume obtained by either method should be within the volume tolerance requirements of 6.1.1 and 6.1.2, using either or cm^3 to ft^3. To convert cm^3 to ft^3, divide cm^3 by 28 317, record to the nearest 0.0001 ft^3.

A1.5.2 The difference between the two methods should not exceed 0.5 % of the nominal volume of the mold, cm^3 to ft^3.

A1.5.3 Repeat the determination of volume, which is most suspect or both if these criteria are not met.

A1.5.4 Failure to obtain satisfactory agreement, between these methods, even after several trials is an indication the mold is badly deformed and should be replaced.

A1.5.5 Use the volume of the mold determined using the water-filling or linear method, or average of both methods as the standardized volume for calculating the moist density (see 11.4). This value (V) in cm^3 or m^3 shall have four significant digits. The use of a volume in ft^3, along with masses in lbm shall not be regarded as a nonconformance with this standard.

REFERENCES

(1) Johnson, A. W., and Sallberg, J. R., *Factors Influencing Compaction Test Results*, Highway Research Board, Bulletin 318, Publication 967, National Academy of Sciences-National Research Council, Washington, DC, 1962.

(2) *Earth Manual*, Unites States Bureau of Reclamation, Part 1, Third Edition, 1998, pp. 255-260.

(3) *Earth Manual*, Unites States Bureau of Reclamation, Part 2, Third Edition, 1990, USBR 5515.

(4) Torrey, V. H., and Donaghe, R. T., "Compaction Control of Earth-Rock Mixtures: A New Approach," *Geotechnical Testing Journal*, GTJODJ, Vol 17, No. 3, September 1994, pp. 371-386.

SUMMARY OF CHANGES

In accordance with Committee D18 policy, this section identifies the location of changes to this standard since the last published edition (2000aε1) that may impact the use of this standard.

(*1*) Changed Notes 2 and 3 to text. Also, added in 1.2 that compacted soil cannot be reused, since it is such an important issue.

(*2*) The amount of allowable oversize fraction increased to at least 25 % for Methods A and B.

(*3*) In 1.3, simplified the description of the gradation controlling the selection of the method.

(*4*) Updated the section on units.

(*5*) Added reference to Test Methods D 6913 for gradation and sample/specimen processing.

(*6*) In Terminology, relocated some terms to definitions and made editorial changes.

(*7*) In apparatus for ovens, added the guidance that they should be vented outside the building. In mixing tools, added a sprayer and made the mixer optional. The sector face has to be used for the 6-in. mold and the area of its face the same as the circular one. The requirement for balances was changed to conform to the latest version of Test Methods D 2216 used to determine water content.

(*8*) More guidance is provided in following areas: *(a)* why one shall not reuse compacted soil; *(b)* plotting compaction curve; *(c)* using molding water content to check the one taken after compaction and to determine magnitude of bleeding; *(d)* proper pattern of rammer during compaction and what to do when the rammer causes to soil to flow up the sides; *(e)* removing the collar and mold from base plate; *(f)* trimming subspecimens containing gravel; and *(g)* calculating the percentages for oversize and test fractions.

(*9*) Section 10.4.9 was reworded to permit alternative methods for obtaining water content samples from compacted specimens and to clarify the requirements of Test Methods D 2216.

(*10*) Changed the title and revised the Calculations section.

(*11*) Updated the Report section to agree with D18.91 requirements.

(*12*) Updated the Annex on volume of mold to allow either water filling or linear method to determine the volume of the mold , to measure temperature to 0.1°C instead of nearest 1°C, and to use Test Methods D 854 (or equation) for density of water.

ASTM International takes no position respecting the validity of any patent rights asserted in connection with any item mentioned in this standard. Users of this standard are expressly advised that determination of the validity of any such patent rights, and the risk of infringement of such rights, are entirely their own responsibility.

This standard is subject to revision at any time by the responsible technical committee and must be reviewed every five years and if not revised, either reapproved or withdrawn. Your comments are invited either for revision of this standard or for additional standards and should be addressed to ASTM International Headquarters. Your comments will receive careful consideration at a meeting of the responsible technical committee, which you may attend. If you feel that your comments have not received a fair hearing you should make your views known to the ASTM Committee on Standards, at the address shown below.

This standard is copyrighted by ASTM International, 100 Barr Harbor Drive, PO Box C700, West Conshohocken, PA 19428-2959, United States. Individual reprints (single or multiple copies) of this standard may be obtained by contacting ASTM at the above address or at 610-832-9585 (phone), 610-832-9555 (fax), or service@astm.org (e-mail); or through the ASTM website (www.astm.org).

ASTM D 2937
STANDARD TEST METHOD FOR DENSITY OF SOIL IN PLACE BY THE DRIVE CYLINDER METHOD

Designation: D 2937 – 04

Standard Test Method for Density of Soil in Place by the Drive-Cylinder Method[1]

This standard is issued under the fixed designation D 2937; the number immediately following the designation indicates the year of original adoption or, in the case of revision, the year of last revision. A number in parentheses indicates the year of last reapproval. A superscript epsilon (ε) indicates an editorial change since the last revision or reapproval.

This standard has been approved for use by agencies of the Department of Defense.

1. Scope*

1.1 This test method covers the determination of in-place density of soil by the drive-cylinder method. The test method involves obtaining a relatively undisturbed soil sample by driving a thin-walled cylinder and the subsequent activities for the determination of in-place density. When sampling or in-place density is required at depth, Test Method D 1587 should be used.

1.2 This test method is not appropriate for sampling organic soils which can compress upon sampling, very hard natural soils and heavily compacted soils which cannot be easily penetrated by the drive sampler, soils of low plasticity which will not be readily retained in the cylinder, or soils which contain appreciable amounts of gravel (particles coarser than 4.75 mm (3/16 in.)). The presence of particles coarser than 4.75 mm (3/16 in.) may introduce significant errors in density measurements by causing voids along the wall of the cylinder during driving, and when coarse materials have to be dislodged by the trimming of the sample obtained by the cylinder.

1.3 This test method is limited to the procedures necessary for obtaining specimens suitable for determining the in-place density and water content of certain soils. The procedures and precautions necessary for selecting locations and obtaining undisturbed samples suitable for laboratory testing or otherwise determining engineering properties is beyond the scope of this test method.

1.4 It is common practice in the engineering profession to concurrently use pounds to represent both a unit of mass (lbm) and a unit of force (lbf). This implicitly combines two separate systems of units, that is, the absolute system and the gravitational system. It is scientifically undesirable to combine the use of two separate sets of inch-pound units within a single standard. This test method has been written using the gravitational system of units when dealing with the inch-pound system. In this system the pound (lbf) represents a unit of force (weight). However, the use of balances or scales recording pounds of mass (lbm), or the recording of density in lbm/ft^3 should not be regarded as nonconformance with this test method.

1.5 All observed and calculated values shall conform to the guidelines for significant digits and rounding established in Practice D 6026.

1.6 The standard values stated in SI units are to be regarded as the standard. The values in parentheses are provided for information purposes only.

1.7 *This standard does not purport to address all of the safety concerns, if any, associated with its use. It is the responsibility of the user of this standard to establish appropriate safety and health practices and determine the applicability of regulatory limitations prior to use.*

2. Referenced Documents

2.1 *ASTM Standards:* [2]

D 653 Terminology Relating to Soil, Rock, and Contained Fluids

D 698 Test Method for Laboratory Compaction Characteristics of Soil Using Standard Effort (12,000 ft-lbf/ft (600 kN-m/m))

D 1557 Test Method for Laboratory Compaction Characteristics of Soil Using Modified Effort (56,000 ft-lbf/ft (2700 kN-m/m))

D 1587 Practice for Thin-Walled Tube Sampling of Soils

D 2216 Test Method for Laboratory Determination of Water (Moisture) Content of Soil and Rock

D 2488 Practice for Description and Identification of Soils for Engineering Practices (Visual-Manual Procedure)

D 3740 Practice for the Evaluation of Agencies Engaged in the Testing and/or Inspection of Soil and Rock as Used in Engineering Design and Construction

D 4643 Test Method for Determination of Water (Moisture) Content of Soil by the Microwave Oven Method

D 4753 Specification for Evaluating Selecting, and Specifying Balances and Scales for Use in Soil, Rock, and

[1] This test method is under the jurisdiction of ASTM Committee D18 on Soil and Rock and is the direct responsibility of Subcommittee D18.08 on Special and Construction Control Tests.

Current edition approved Nov. 1, 2004. Published December 2004. Originally approved in 1971. Last previous edition approved in 2000 as D 2937 – 00.

[2] For referenced ASTM standards, visit the ASTM website, www.astm.org, or contact ASTM Customer Service at service@astm.org. For *Annual Book of ASTM Standards* volume information, refer to the standard's Document Summary page on the ASTM website.

***A Summary of Changes section appears at the end of this standard.**

Copyright © ASTM International, 100 Barr Harbor Drive, PO Box C700, West Conshohocken, PA 19428-2959, United States.

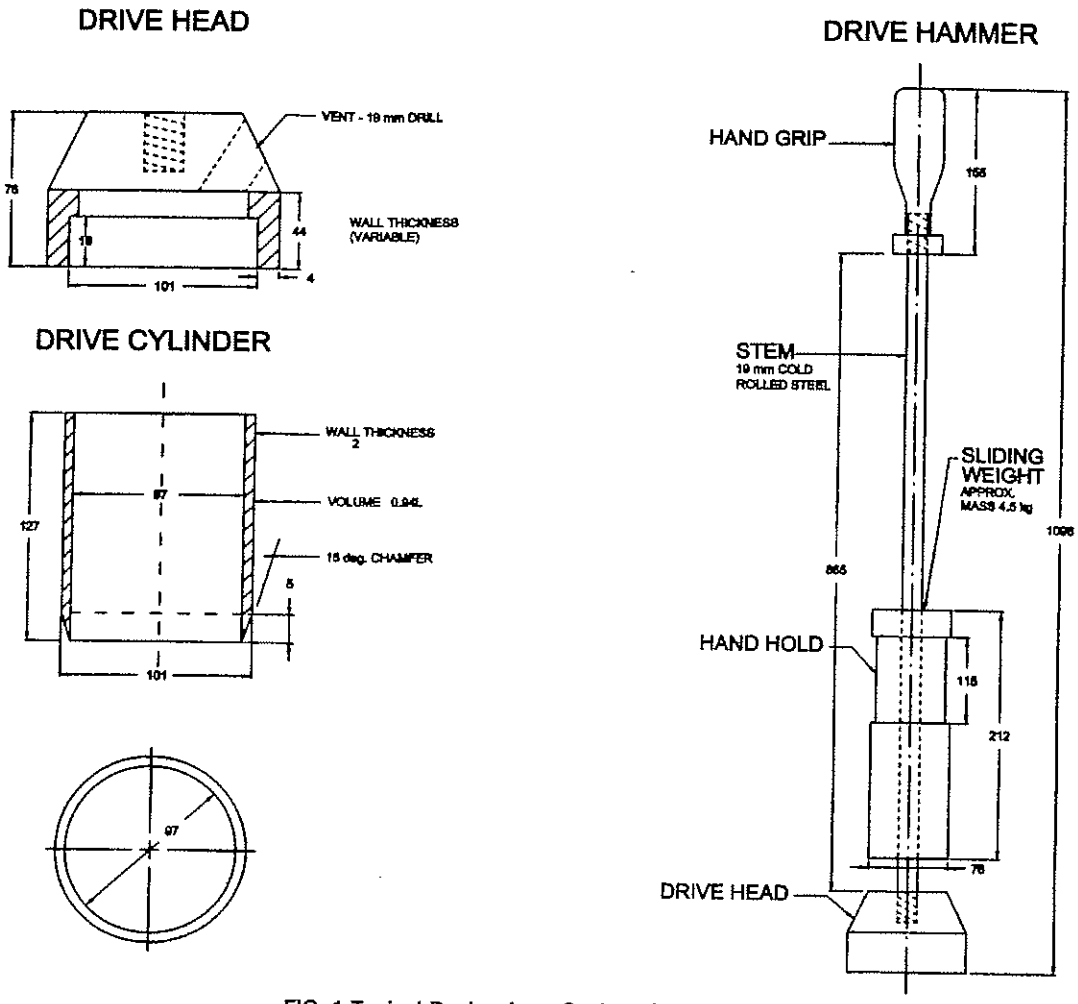

FIG. 1 Typical Design for a Surface Soil Sampler

TABLE 1 Dimensional Equivalent for Fig. 1

mm	in.	mm	in.
2	5/64	101.2	4
3.3	0.13	114.3	4½
4.8	3/16	127.0	5
19	¾	152.4	6
44.4	1¾	212.0	8 11/32
76	3	863.6	34
97.2	3 13/16	1117.6	44

Construction Materials Testing

D 4944 Test Method for Field Determination of Water (Moisture) Content of Soil by the Calcium Carbide Gas Pressure Tester Method

D 4959 Test Method for Determination of Water (Moisture) Content of Soil by Direct Heating Method

D 6026 Practice for Using Significant Digits in Geotechnical DAta

3. Terminology

3.1 *Definitions*—All definitions are in accordance with Terminology D 653.

4. Significance and Use

4.1 This test method can be used to determine the in-place density of natural, inorganic soils which do not contain significant amounts of particles coarser than 4.75 mm (3/16 in.), and which can be readily retained in the drive cylinder. This test method may also be used to determine the in-place density of compacted soils used in construction of structural fill, highway embankments, or earth dams. When the in-place density is to be used as a basis for acceptance, the drive cylinder volumes must be as large as practical and not less than 850 cm^3 (.03 ft^3).

4.2 This test method is not recommended for use in organic or friable soils. This test method may not be applicable for soft, highly plastic, noncohesive, saturated or other soils which are easily deformed, compress during sampling, or which may not be retained in the drive cylinder. The use of this test method in soils containing particles coarser than 4.75 mm (3/16 in.) may result in damage to the drive cylinder equipment. Soils

containing particles coarser than 4.75 mm (3/16 in.) may not yield valid results if voids are created along the wall of cylinder during driving, or if particles are dislodged from the sample ends during trimming.

4.3 The general principles of this test method have been successfully used to obtain samples of some field compacted fine-grained soils having a maximum particle size of 4.75 mm (3/16 in.) for purposes other than density determinations, such as the testing for engineering properties.

NOTE 1—Notwithstanding the statements on precision and bias contained in this standard: The precision of this test method is dependent on the competence of the personnel performing it and the suitability of the equipment and facilities used. Agencies which meet the criteria of Practice D 3740 are generally considered capable of competent and objective testing. Users of this method are cautioned that compliance with Practice D 3740 does not in itself assure reliable testing. Reliable testing depends on many factors; Practice D 3740 provides a means of evaluating some of those factors.

5. Apparatus

5.1 *Drive Cylinders*, of approximately 102 to 152 mm (4 to 6 in.) diameter or larger. Typical details of drive cylinders with outside diameters of 102 mm are shown in Fig. 1. Drive cylinders of other diameters will require proportional changes in the drive-cylinder tube and drive-head dimensions. The volume of the cylinders with the dimensions shown in Fig. 1 is approximately 942 cm^3(0.033 ft^3). The apparatus shown in Fig. 1 is of a design suitable for use at or near the surface.

5.1.1 When the in-place density is to be used as a basis for acceptance of compacted fill, the cylinders shall be as large as practical to minimize the effects of errors and shall in no case be smaller than 850 cm^3(0.03 ft^3).

5.1.2 The number of cylinders required depends on the number of samples to be taken and the anticipated rapidity by which the cylinders can be returned to service after weighing, cleaning, etc.

5.1.3 The cylinders shown in Fig. 1 meet the clearance ratio, wall thickness and area-ratio requirements as set forth by Hvorslev[3] for drive samplers, and should preferably not exceed 10 to 15 %, as defined by the following:

$$A_r = [(D_e^2 - D_i^2)/D_i^2] \times 100 \quad (1)$$

where:

A_r = area ratio, %,
D_e = maximum external diameter of the drive sampler, and
D_i = minimum internal diameter of the drive sampler at the cutting edge.

5.1.4 Except for very short samplers with no clearance, the inside clearance ratio of the cylinders should be 1 % or greater, with increasing ratios with the increase in plasticity of the soil being sampled. Inside clearance ratio is defined by the following:

$$C_r = \frac{D_i - D_e}{D_e} \quad (2)$$

where:

C_r = inside clearance ratio, %
D_e = effective (minimum) inside diameter of the sampler at the cutting edge, after swaging, and
D_i = internal diameter of the sampler.

5.1.5 Cylinders of other diameters should conform to these requirements.

5.2 *Drive Head*—The typical details of the drive heads and appurtenances are shown in Fig. 1. The drive head has a sliding weight for driving the cylinder.

5.3 *Straightedge*, steel, approximately 3 mm (1/8 in.) by 38 mm (1½ in.) by 305 mm (12 in.) with one edge sharpened at approximately a 45° angle for trimming the ends of the sample flush with the cylinder.

5.4 *Shovel*—Any one of several types of shovels or spades is satisfactory in shallow sampling for digging the cylinders out after they have been driven into the soil.

5.5 *Balances*—A balance having a minimum capacity of 1 kg and meeting the requirements of Specification D 4753 for a balance of 1 g readability is required for the cylinders shown in Fig. 1. Larger cylinders will require a balance of 20 kg capacity with readability of 0.1 %.

5.6 *Drying Equipment*—Equipment or ovens, or both, to determine water (moisture) content in compliance with Test Methods D 2216, D 4643, D 4944, or D 4959.

5.7 *Miscellaneous Equipment*—Brushes, sledgehammers, plastic bags, metal cans with lids, or other suitable containers for retaining the drive cylinder and sample until determination of mass and drying, spoons, inside/outside vernier caliper, or the equivalent accurate to 0.0025 mm (0.01 in.) for calibration, gloves, and safety glasses.

6. Sampling

6.1 *Sampling at or Near the Surface*:

6.1.1 Brush all loose particles from the surface. For near-surface sampling (not more than 1 m (36 in.) in depth), sample through a hole bored with an auger or dug by a shovel from which loosened material has been removed. Obtain a fairly level surface before any cylinder is driven. Depending on the soil texture and moisture, the surface may be prepared utilizing a bulldozer blade or other heavy equipment blades provided the sample area and vicinity are not deformed, compressed, torn, or otherwise disturbed.

6.1.2 Assemble the cylinder and drive apparatus with the sharpened edge on the surface to be sampled. Drive the cylinder by raising the drop hammer and allowing it to fall, or alternatively by applying a uniform force via a jack or similar device, while keeping the drive rod steady and in a vertical position. Continue driving until the top of the cylinder is approximately 13 mm (½ in.) below the original surface. Overdriving may result in deforming or compressing the sample and may provide erroneous results. Care should be taken to prevent overdriving, particularly when sampling below the surface. If overdriving occurs or is suspected, the sample should be discarded and the soil resampled. Remove the drive head and dig the cylinder from the ground with a shovel, digging the soil from around the sides of the cylinder and undercutting several inches below the bottom of the cylinder before lifting the cylinder out. When sampling near,

[3] Hvorslev, M. J., "Surface Exploration and Sampling of Soils for Engineering Purposes," Engineering Foundation, 345 E. 47th St., New York, NY 10017.

but below, the surface, use the same procedure, but more soil will necessarily have to be dug from around the sides of the cylinder to properly undercut the cylinder.

6.1.3 After the cylinder has been removed from the ground, trim any excess soil from the sides of the cylinder. Using the straightedge, trim the ends of the sample flush and plane with the ends of the cylinder. A satisfactory sample is composed of relatively undisturbed soil representative of the soil in place and shall not contain rocks, roots, or other foreign material. If the cylinder is not full or is not representative, discard the sample and take another sample. If the cylinder is deformed or otherwise damaged while driving it into or removing it from the ground, discard the sample and repair or replace the cylinder. Immediately determine the mass of the sample and determine the water content or place the drive cylinder and sample in a container which will prevent soil or water loss until mass and water determinations can be made.

7. Calibration

7.1 Before testing begins and periodically thereafter, or when damage is suspected, check the cutting edge of the drive cylinders (dulled or damaged cylinders may be resharpened and reswaged or discarded).

7.1.1 Before testing and periodically thereafter, determine the mass and volume of each cylinder. Determine and record the mass accurately to the nearest 1 g. Determine the volume of each cylinder by measuring the height and the swaged-end diameter at four equally spaced points to 0.254 mm (0.01 in.) and average the respective dimensions. Calculate and record the volume to the nearest 0.16 mm^3(0.01 $in.^3$).

7.2 Permanently identify each cylinder by a number or symbol traceable to the calibration data. It may be desirable in some cases to show the mass and volume on the cylinder along with the identification.

8. Procedure

8.1 Determine the mass of the drive cylinder and soil sample to the nearest 1 g and record.

8.2 Remove the soil from the cylinder. Obtain a representative specimen for water content determination, or use the entire sample. Specimens for determining water content are to be as large as practical but in no case smaller than 100 g and selected in such a way so as to represent all the material from the cylinder. Determine the water content of the soil in accordance with either Test Methods D 2216, D 4643, D 4944, or D 4959.

9. Calculation

9.1 The in-place dry density of the soil is expressed as the mass of the dry soil divided by the volume of soil, and is usually reported in kilograms per cubic meter or pounds per cubic foot.

9.2 Calculate the dry mass of the drive-cylinder sample, M_3, in grams, as follows:

$$M_3 = [(M_1 - M_2)/(100 + w)] \times 100 \quad (3)$$

where:

M_1 = mass of the cylinder and wet soil sample, g,
M_2 = mass of the cylinder, g, and
w = water content, %, dry mass basis.

9.3 Calculate the dry density, ρ_d, of the drive-cylinder sample in g/cm^3 as follows:

$$\rho_d = (M_3/V) \quad (4)$$

where:

V = volume of the drive cylinder, cm^3 (to the nearest 0.01 cm^3)

NOTE 2—It may be desired to express the in-place density as a percentage of some other density, for example, the laboratory maximum density, determined in accordance with Test Method D 698. This relation can be determined by dividing the in-place density by the maximum density and multiplying by 100.

10. Data Sheet(s)/Form(s)

10.1 Report the following information:

10.1.1 Location,

10.1.2 Depth below ground surface or elevation of surface, or both,

10.1.3 Dry density,

10.1.4 Water content and the test method used,

10.1.5 Dimensions and volume of the sampler,

10.1.6 Visual description of the soil sample, and

10.1.7 Comments on soil sample disturbance.

10.2 If the in-place dry density or unit weight is expressed as a percentage of another value, or used as a basis for acceptance of compacted fill, include the following:

10.2.1 Volume of the drive cylinder used,

10.2.2 The comparative dry density or unit weight value and water content used,

10.2.3 The method used to determine the comparative values,

10.2.4 The comparative percentage of the in-place material to the comparison value, and

10.2.5 The acceptance criteria applicable to the test.

11. Precision and Bias

11.1 The precision of this test method is operator dependent and a function of the care exercised in performing the steps of the procedure, giving particular attention to careful control and systematic repetition of the procedure used. While no standard soils exist, limited studies running repetitive adjacent tests on the same soil using 7.3 cm (2⅞ in.) inside diameter cylinders, have indicated standard deviations of 32 kg/m^3(2.00 lb/ft^3) to 46.4 kg/cm^3(2.90 lb/ft^3) for soils with a compacted wet density ranging from 2022 kg/cm^3(126.2 lb/ft^3) to 2154 kg/m^3(134.5 lb/ft^3).[4]

In another study, running repetitive adjacent tests on the same soil using a 13.0 cm (5⅛ in.) inside diameter cylinder, a standard deviation of 31 kg/m^3(1.93 lb/ft^3) was obtained for soil with a compacted wet density of about 2000 kg/m^3(125

[4] Noorany, I., Gardener, W.S., Corley, D.J., and Brown, J.L., "Variability in Field Density Tests," *Constructing and Controlling Compaction of Earth Fills*, ASTM STP 1384, March 2000.

lb/ft^3).[5] In general, a lower standard deviation should be expected with a larger diameter drive cylinder.

11.2 There are no absolute values of in-place density for soils against which this test method can be compared. Therefore this test method has no determinable bias since the values obtained can only be defined in terms of the test method.

11.3 Subcommittee D18.08 is seeking pertinent data from users of this test method on precision.

12. Keywords

12.1 compaction control; density testing; drive cylinder; drive cylinder test; field density; in-place density; plug sampler; quality control; subsurface sampler; surface sampler; unit weight

[5] McCook, D. K., and Shanklin, D., "Nuclear Density Testing and Comparisons with Sand Cone and Calibrated Cylinder Methods," *Constructing and Controlling Compaction of Earth Fills*, ASTM STP 1384, March 2000.

SUMMARY OF CHANGES

(1) Added Section 1.5 and renumbered.
(2) Fixed some grammatical mistakes
(3) Added D 6026 to Referenced Documents Section.
(4) Updated Summary of Changes Section.

ASTM International takes no position respecting the validity of any patent rights asserted in connection with any item mentioned in this standard. Users of this standard are expressly advised that determination of the validity of any such patent rights, and the risk of infringement of such rights, are entirely their own responsibility.

This standard is subject to revision at any time by the responsible technical committee and must be reviewed every five years and if not revised, either reapproved or withdrawn. Your comments are invited either for revision of this standard or for additional standards and should be addressed to ASTM International Headquarters. Your comments will receive careful consideration at a meeting of the responsible technical committee, which you may attend. If you feel that your comments have not received a fair hearing you should make your views known to the ASTM Committee on Standards, at the address shown below.

This standard is copyrighted by ASTM International, 100 Barr Harbor Drive, PO Box C700, West Conshohocken, PA 19428-2959, United States. Individual reprints (single or multiple copies) of this standard may be obtained by contacting ASTM at the above address or at 610-832-9585 (phone), 610-832-9555 (fax), or service@astm.org (e-mail); or through the ASTM website (www.astm.org).

ASTM D 4767
STANDARD TEST METHOD FOR CONSOLIDATED UNDRAINED TRIAXIAL COMPRESSION TEST FOR COHESIVE SOILS

Designation: D 4767 – 04

Standard Test Method for Consolidated Undrained Triaxial Compression Test for Cohesive Soils[1]

This standard is issued under the fixed designation D 4767; the number immediately following the designation indicates the year of original adoption or, in the case of revision, the year of last revision. A number in parentheses indicates the year of last reapproval. A superscript epsilon (ε) indicates an editorial change since the last revision or reapproval.

1. Scope*

1.1 This test method covers the determination of strength and stress-strain relationships of a cylindrical specimen of either an undisturbed or remolded saturated cohesive soil. Specimens are isotropically consolidated and sheared in compression without drainage at a constant rate of axial deformation (strain controlled).

1.2 This test method provides for the calculation of total and effective stresses, and axial compression by measurement of axial load, axial deformation, and pore-water pressure.

1.3 This test method provides data useful in determining strength and deformation properties of cohesive soils such as Mohr strength envelopes and Young's modulus. Generally, three specimens are tested at different effective consolidation stresses to define a strength envelope.

1.4 The determination of strength envelopes and the development of relationships to aid in interpreting and evaluating test results are beyond the scope of this test method and must be performed by a qualified, experienced professional.

1.5 All observed and calculated values shall conform to the guidelines for significant digits and rounding established in Practice D 6026.

1.5.1 The method used to specify how data are collected, calculated, or recorded in this standard is not directly related to the accuracy to which the data can be applied in design or other uses, or both. How one applies the results obtained using this standard is beyond its scope.

1.6 The values stated in SI units shall be regarded as the standard. The values stated in inch-pound units are approximate.

1.7 *This standard does not purport to address all of the safety concerns, if any, associated with its use. It is the responsibility of the user of this standard to establish appropriate safety and health practices and determine the applicability of regulatory limitations prior to use.*

2. Referenced Documents

2.1 *ASTM Standards:* [2]

D 422 Method for Particle-Size Analysis of Soils

D 653 Terminology Relating to Soil, Rock, and Contained Fluids

D 854 Test Method for Specific Gravity of Soils

D 1587 Practice for Thin-Walled Tube Sampling of Soils

D 2166 Test Method for Unconfined Compressive Strength of Cohesive Soil

D 2216 Method for Laboratory Determination of Water (Moisture) Content of Soil, Rock, and Soil-Aggregate Mixtures

D 2435 Test Method for One-Dimensional Consolidation Properties of Soils

D 2850 Test Method for Unconsolidated, Undrained Compressive Strength of Cohesive Soils in Triaxial Compression

D 3740 Practice for Minimum Requirements for Agencies Engaged in the Testing and/or Inspection of Soil and Rock as Used in Engineering Design and Construction

D 4220 Practices for Preserving and Transporting Soil Samples

D 4318 Test Method for Liquid Limit, Plastic Limit, and Plasticity Index of Soils

D 4753 Specification for Evaluating, Selecting, and Specifying Balances and Scales for Use in Soil and Rock Testing

D 6026 Practice for Using Significant Digits in Geotechnical Data

3. Terminology

3.1 *Definitions*—The definitions of terms used in this test method shall be in accordance with Terminology D 653.

3.2 *Definitions of Terms Specific to This Standard:*

3.2.1 *back pressure*—a pressure applied to the specimen pore-water to cause air in the pore space to compress and to

[1] This test method is under the jurisdiction of ASTM Committee D18 on Soil and Rock and is the direct responsibility of Subcommittee D18.05 on Strength and Compressibility of Soils.

Current edition approved Nov. 1, 2004. Published December 2004. Originally approved in 1988. Last previou edition approved in 2002 as D 4767 – 02.

[2] For referenced ASTM standards, visit the ASTM website, www.astm.org, or contact ASTM Customer Service at service@astm.org. For *Annual Book of ASTM Standards* volume information, refer to the standard's Document Summary page on the ASTM website.

***A Summary of Changes section appears at the end of this standard.**

Copyright © ASTM International, 100 Barr Harbor Drive, PO Box C700, West Conshohocken, PA 19428-2959, United States.

pass into solution in the pore-water thereby increasing the percent saturation of the specimen.

3.2.2 *effective consolidation stress*—the difference between the cell pressure and the pore-water pressure prior to shearing the specimen.

3.2.3 *failure*—the stress condition at failure for a test specimen. Failure is often taken to correspond to the maximum principal stress difference (maximum deviator stress) attained or the principal stress difference (deviator stress) at 15 % axial strain, whichever is obtained first during the performance of a test. Depending on soil behavior and field application, other suitable failure criteria may be defined, such as maximum effective stress obliquity, $\sigma'1/\sigma'3$, or the principal stress difference (deviator stress) at a selected axial strain other than 15 %.

4. Significance and Use

4.1 The shear strength of a saturated soil in triaxial compression depends on the stresses applied, time of consolidation, strain rate, and the stress history experienced by the soil.

4.2 In this test method, the shear characteristics are measured under undrained conditions and is applicable to field conditions where soils that have been fully consolidated under one set of stresses are subjected to a change in stress without time for further consolidation to take place (undrained condition), and the field stress conditions are similar to those in the test method.

NOTE 1—If the strength is required for the case where the soil is not consolidated during testing prior to shear, refer to Test Method D 2850 or Test Method D 2166.

4.3 Using the pore-water pressure measured during the test, the shear strength determined from this test method can be expressed in terms of effective stress. This shear strength may be applied to field conditions where full drainage can occur (drained conditions) or where pore pressures induced by loading can be estimated, and the field stress conditions are similar to those in the test method.

4.4 The shear strength determined from the test expressed in terms of total stresses (undrained conditions) or effective stresses (drained conditions) is commonly used in embankment stability analyses, earth pressure calculations, and foundation design.

NOTE 2—Notwithstanding the statements on precision and bias contained in this test method. The precision of this test method is dependent on the competence of the personnel performing it and the suitability of the equipment and facilities used. Agencies which meet the criteria of Practice D 3740 are generally considered capable of competent testing. Users of this test method are cautioned that compliance with Practice D 3740 does not ensure reliable testing. Reliable testing depends on several factors; Practice D 3740 provides a means of evaluating some of those factors.

5. Apparatus

5.1 The requirements for equipment needed to perform satisfactory tests are given in the following sections. See Fig. 1 and Fig. 2

5.2 *Axial Loading Device*—The axial loading device shall be a screw jack driven by an electric motor through a geared transmission, a hydraulic loading device, or any other compression device with sufficient capacity and control to provide the rate of axial strain (loading) prescribed in 8.4.2. The rate of advance of the loading device shall not deviate by more than ±1 % from the selected value. Vibration due to the operation of the loading device shall be sufficiently small to not cause dimensional changes in the specimen or to produce changes in pore-water pressure when the drainage valves are closed.

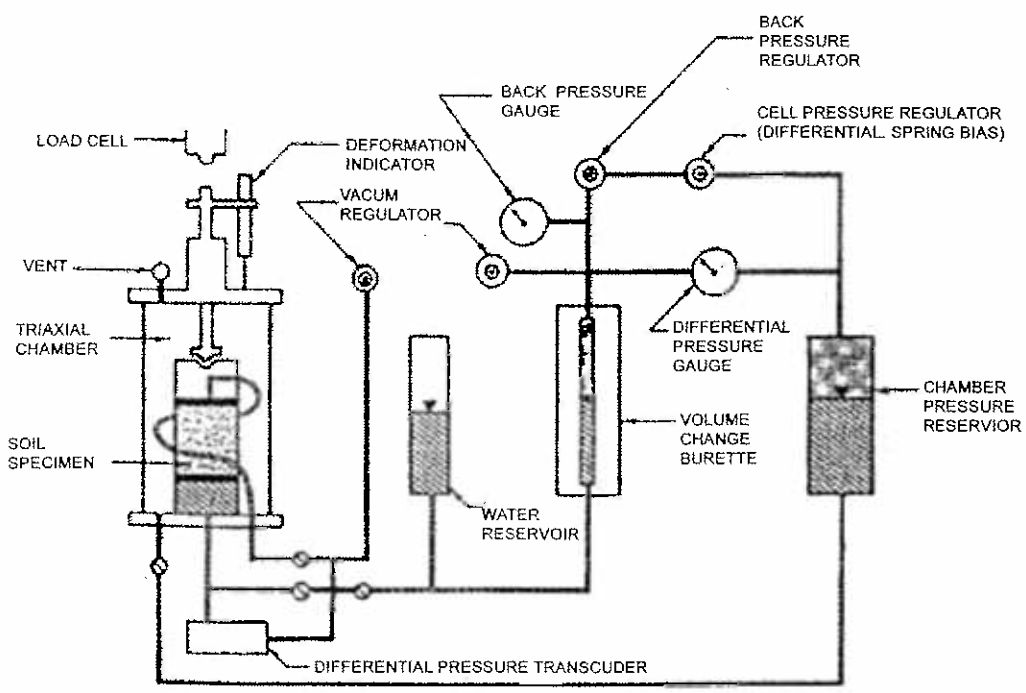

FIG. 1 Schematic Diagram of a Typical Consolidated Undrained Triaxial Apparatus

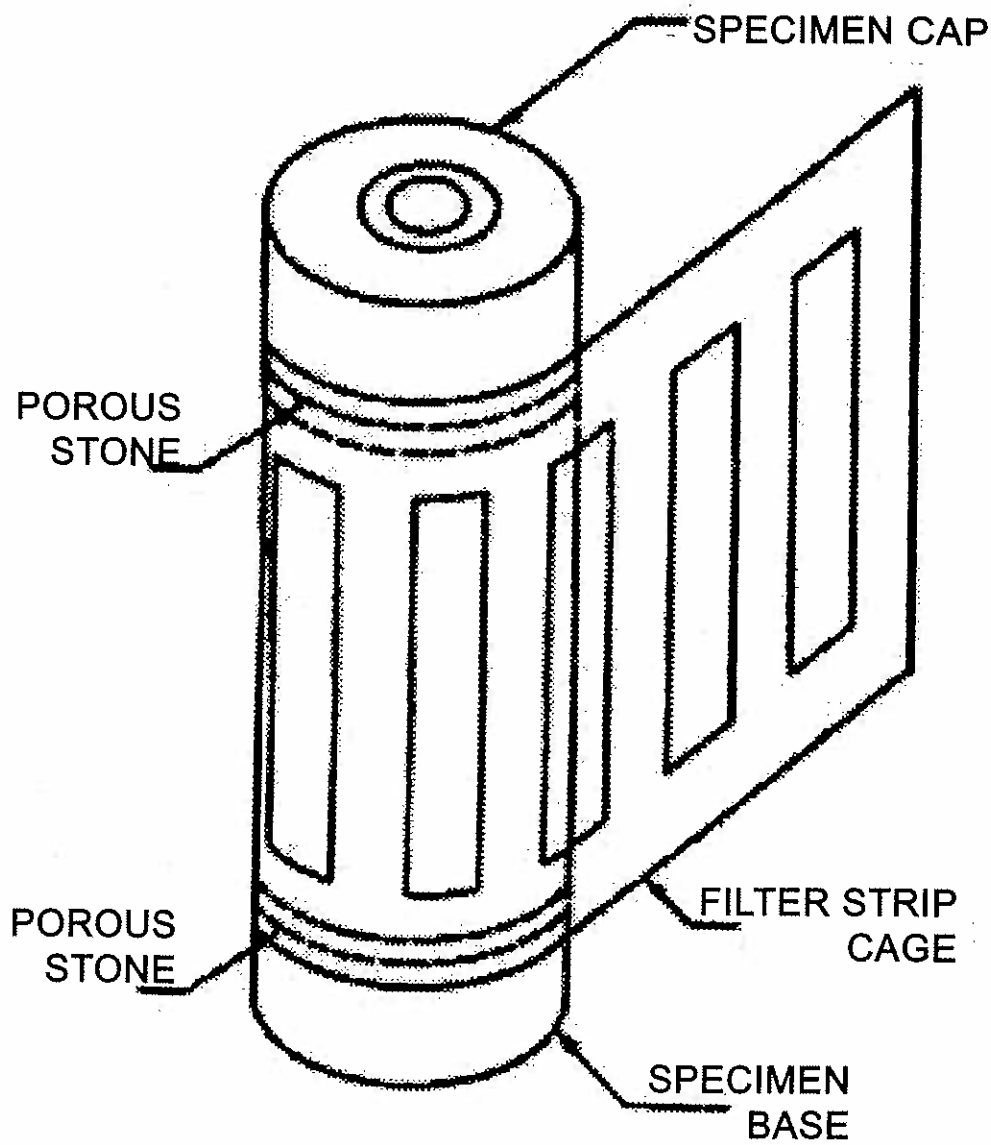

FIG. 2 Filter Strip Cage

NOTE 3—A loading device may be judged to produce sufficiently small vibrations if there are no visible ripples in a glass of water placed on the loading platform when the device is operating at the speed at which the test is performed.

5.3 *Axial Load-Measuring Device*—The axial load-measuring device shall be a load ring, electronic load cell, hydraulic load cell, or any other load-measuring device capable of the accuracy prescribed in this paragraph and may be a part of the axial loading device. The axial load-measuring device shall be capable of measuring the axial load to an accuracy of within 1 % of the axial load at failure. If the load-measuring device is located inside the triaxial compression chamber, it shall be insensitive to horizontal forces and to the magnitude of the chamber pressure.

5.4 *Triaxial Compression Chamber*—The triaxial chamber shall have a working chamber pressure equal to the sum of the effective consolidation stress and the back pressure. It shall consist of a top plate and a base plate separated by a cylinder. The cylinder may be constructed of any material capable of withstanding the applied pressures. It is desirable to use a transparent material or have a cylinder provided with viewing ports so the behavior of the specimen may be observed. The top plate shall have a vent valve such that air can be forced out of the chamber as it is filled. The baseplate shall have an inlet through which the pressure liquid is supplied to the chamber, and inlets leading to the specimen base to the cap to allow saturation and drainage of the specimen when required. The chamber shall provide a connection to the cap.

5.5 *Axial Load Piston*—The piston passing through the top of the chamber and its seal must be designed so the variation in axial load due to friction does not exceed 0.1 % of the axial

load at failure and so there is negligible lateral bending of the piston during loading.

NOTE 4—The use of two linear ball bushings to guide the piston is recommended to minimize friction and maintain alignment.

NOTE 5—A minimum piston diameter of ⅙ the specimen diameter has been used successfully in many laboratories to minimize lateral bending.

5.6 *Pressure and Vacuum-Control Devices*—The chamber pressure and back pressure control devices shall be capable of applying and controlling pressures to within ±2 kPa (0.25 lb/in.^{2}) for effective consolidation pressures less than 200 kPa (28 lb/in.^{2}) and to within ±1 % for effective consolidation pressures greater than 200 kPa. The vacuum-control device shall be capable of applying and controlling partial vacuums to within ±2 kPa. The devices shall consist of pressure/volume controllers, self-compensating mercury pots, pneumatic pressure regulators, combination pneumatic pressure and vacuum regulators, or any other device capable of applying and controlling pressures or partial vacuums to the required tolerances. These tests can require a test duration of several day. Therefore, an air/water interface is not recommended for either the chamber pressure or back pressure systems, unless isolated from the specimen and chamber (e.g. by long tubing).

5.7 *Pressure- and Vacuum-Measurement Devices*—The chamber pressure-, back pressure-, and vacuum-measuring devices shall be capable of measuring pressures or partial vacuums to the tolerances given in 5.6. They may consist of Bourdon gages, pressure manometers, electronic pressure transducers, or any other device capable of measuring pressures, or partial vacuums to the stated tolerances. If separate devices are used to measure the chamber pressure and back pressure, the devices must be calibrated simultaneously and against the same pressure source. Since the chamber and back pressure are the pressures taken at the mid-height of the specimen, it may be necessary to adjust the calibration of the devices to reflect the hydraulic head of fluids in the chamber and back pressure control systems.

5.8 *Pore-Water Pressure-Measurement Device*—The specimen pore-water pressure shall also be measured to the tolerances given in 5.6. During undrained shear, the pore-water pressure shall be measured in such a manner that as little water as possible is allowed to go into or out of the specimen. To achieve this requirement, a very stiff electronic pressure transducer or null-indicating device must be used. With an electronic pressure transducer the pore-water pressure is read directly. With a null-indicating device a pressure control is continuously adjusted to maintain a constant level of the water/mercury interface in the capillary bore of the device. The pressure required to prevent movement of the water is equal to the pore-water pressure. Both measuring devices shall have a compliance of all the assembled parts of the pore-water pressure-measurement system relative to the total volume of the specimen, satisfying the following requirement:

$$(\Delta V/V)/\Delta u < 3.2 \times 10^{-6}\ \mathrm{m^2/kN}\ (2.2 \times 10^{-5}\ \mathrm{in.^2/lb}) \qquad (1)$$

where:

ΔV = change in volume of the pore-water measurement system due to a pore pressure change, mm^3(in.^{3}),

V = total volume of the specimen, mm^3(in.^{3}), and

Δu = change in pore pressure, kPa (lb/in.^{2}).

NOTE 6—To meet the compliance requirement, tubing between the specimen and the measuring device should be short and thick-walled with small bores. Thermoplastic, copper, and stainless steel tubing have been used successfully.

5.9 *Volume Change Measurement Device*— The volume of water entering or leaving the specimen shall be measured with an accuracy of within ±0.05 % of the total volume of the specimen. The volume measuring device is usually a burette connected to the back pressure but may be any other device meeting the accuracy requirement. The device must be able to withstand the maximum back pressure.

5.10 *Deformation Indicator*—The vertical deformation of the specimen is usually determined from the travel of the piston acting on the top of the specimen. The piston travel shall be measured with an accuracy of at least 0.25 % of the initial specimen height. The deformation indicator shall have a range of at least 15 % of the initial height of the specimen and may be a dial indicator, linear variable differential transformer (LVDT), extensiometer, or other measuring device meeting the requirements for accuracy and range.

5.11 *Specimen Cap and Base*—The specimen cap and base shall be designed to provide drainage from both ends of the specimen. They shall be constructed of a rigid, noncorrosive, impermeable material, and each shall, except for the drainage provision, have a circular plane surface of contact with the porous disks and a circular cross section. It is desirable for the mass of the specimen cap and top porous disk to be as minimal as possible. However, the mass may be as much as 10 % of the axial load at failure. If the mass is greater than 0.5 % of the applied axial load at failure and greater than 50 g (0.1 lb), the axial load must be corrected for the mass of the specimen cap and top porous disk. The diameter of the cap and base shall be equal to the initial diameter of the specimen. The specimen base shall be connected to the triaxial compression chamber to prevent lateral motion or tilting, and the specimen cap shall be designed such that eccentricity of the piston-to-cap contact relative to the vertical axis of the specimen does not exceed 1.3 mm (0.05 in.). The end of the piston and specimen cap contact area shall be designed so that tilting of the specimen cap during the test is minimal. The cylindrical surface of the specimen base and cap that contacts the membrane to form a seal shall be smooth and free of scratches.

5.12 *Porous Discs*—Two rigid porous disks shall be used to provide drainage at the ends of the specimen. The coefficient of permeability of the disks shall be approximately equal to that of fine sand (1×10^{-4} cm/s (4×10^{-5} in./s)). The disks shall be regularly cleaned by ultrasonic or boiling and brushing and checked to determine whether they have become clogged.

5.13 *Filter-Paper Strips and Disks*— Filter-paper strips are used by many laboratories to decrease the time required for testing. Filter-paper disks of a diameter equal to that of the specimen may be placed between the porous disks and specimen to avoid clogging of the porous disks. If filter strips or disks are used, they shall be of a type that does not dissolve in water. The coefficient of permeability of the filter paper shall not be less than 1×10^{-5} cm/s (4×10^{-6} cm/s) for a normal pressure of 550 kPa (80 lb/in.^{2}). To avoid hoop tension, filter

strips should cover no more than 50 % of the specimen periphery. Filter-strip cages have been successfully used by many laboratories. An equation for correcting the principal stress difference (deviator stress) for the effect of the strength of vertical filter strips is given in 10.4.3.1.

NOTE 7—Whatman's No. 54 Filter Paper has been found to meet the permeability and durability requirements.

5.14 *Rubber Membrane*—The rubber membrane used to encase the specimen shall provide reliable protection against leakage. Membranes shall be carefully inspected prior to use and if any flaws or pinholes are evident, the membrane shall be discarded. To offer minimum restraint to the specimen, the unstretched membrane diameter shall be between 90 and 95 % of that of the specimen. The membrane thickness shall not exceed 1 % of the diameter of the specimen. The membrane shall be sealed to the specimen cap and base with rubber O-rings for which the unstressed inside diameter is between 75 and 85 % of the diameter of the cap and base, or by other means that will provide a positive seal. An equation for correcting the principal stress difference (deviator stress) for the effect of the stiffness of the membrane is given in 10.4.3.2.

5.15 *Valves*—Changes in volume due to opening and closing valves may result in inaccurate volume change and pore-water pressure measurements. For this reason, valves in the specimen drainage system shall be of the type that produce minimum volume changes due to their operation. A valve may be assumed to produce minimum volume change if opening or closing the valve in a closed, saturated pore-water pressure system does not induce a pressure change of greater than 0.7 kPa (±0.1 lb/in.^{2}). All valves must be capable of withstanding applied pressures without leakage.

NOTE 8—Ball valves have been found to provide minimum volume-change characteristics; however, any other type of valve having suitable volume-change characteristics may be used.

5.16 *Specimen-Size Measurement Devices*— Devices used to determine the height and diameter of the specimen shall measure the respective dimensions to within ±0.1 % of the total dimension and shall be constructed such that their use will not disturb the specimen.

NOTE 9—Circumferential measuring tapes are recommended over calipers for measuring the diameter.

5.17 *Recorders*—Specimen behavior may be recorded manually or by electronic digital or analog recorders. If electronic recorders are used, it shall be necessary to calibrate the measuring devices through the recorder using known input standards.

5.18 *Sample Extruder*—The sample extruder shall be capable of extruding the soil core from the sampling tube at a uniform rate in the same direction of travel as the sample entered the tube and with minimum disturbance of the sample. If the soil core is not extruded vertically, care should be taken to avoid bending stresses on the core due to gravity. Conditions at the time of sample removal may dictate the direction of removal, but the principal concern is to minimize the degree of disturbance.

5.19 *Timer*—A timing device indicating the elapsed testing time to the nearest 1 s shall be used to obtain consolidation data (8.3.3).

5.20 *Balance*—A balance or scale conforming to the requirements of Specification D 4753 readable (with no estimate) to 0.1 % of the test mass or better.

5.21 *Water Deaeration Device*—The amount of dissolved gas (air) in the water used to saturate the specimen shall be decreased by boiling, by heating and spraying into a vacuum, or by any other method that will satisfy the requirement for saturating the specimen within the limits imposed by the available maximum back pressure and time to perform the test.

5.22 *Testing Environment*—The consolidation and shear portion of the test shall be performed in an environment where temperature fluctuations are less than ±4°C (±7.2°F) and there is no direct contact with sunlight.

5.23 *Miscellaneous Apparatus*—Specimen trimming and carving tools including a wire saw, steel straightedge, miter box, vertical trimming lathe, apparatus for preparing compacted specimens, membrane and O-ring expander, water content cans, and data sheets shall be provided as required.

6. Test Specimen Preparation

6.1 *Specimen Size*—Specimens shall be cylindrical and have a minimum diameter of 33 mm (1.3 in.). The average height-to-average diameter ratio shall be between 2 and 2.5. An individual measurement of height or diameter shall not vary from average by more than 5 %. The largest particle size shall be smaller than ⅙ the specimen diameter. If, after completion of a test, it is found based on visual observation that oversize particles are present, indicate this information in the report of test data (11.2.23).

NOTE 10—If oversize particles are found in the specimen after testing, a particle-size analysis may be performed on the tested specimen in accordance with Test Method D 422 to confirm the visual observation and the results provided with the test report (11.2.4).

6.2 *Undisturbed Specimens*—Prepare undisturbed specimens from large undisturbed samples or from samples secured in accordance with Practice D 1587 or other acceptable undisturbed tube sampling procedures. Samples shall be preserved and transported in accordance with the practices for Group C samples in Practices D 4220. Specimens obtained by tube sampling may be tested without trimming except for cutting the end surfaces plane and perpendicular to the longitudinal axis of the specimen, provided soil characteristics are such that no significant disturbance results from sampling. Handle specimens carefully to minimize disturbance, changes in cross section, or change in water content. If compression or any type of noticeable disturbance would be caused by the extrusion device, split the sample tube lengthwise or cut the tube in suitable sections to facilitate removal of the specimen with minimum disturbance. Prepare trimmed specimens, in an environment such as a controlled high-humidity room where soil water content change is minimized. Where removal of pebbles or crumbling resulting from trimming causes voids on the surface of the specimen, carefully fill the voids with remolded soil obtained from the trimmings. If the sample can be trimmed with minimal disturbance, a vertical trimming lathe

may be used to reduce the specimen to the required diameter. After obtaining the required diameter, place the specimen in a miter box, and cut the specimen to the final height with a wire saw or other suitable device. Trim the surfaces with the steel straightedge. Perform one or more water content determinations on material trimmed from the specimen in accordance with Test Method D 2216. Determine the mass and dimensions of the specimen using the devices described in 5.16 and 5.20. A minimum of three height measurements (120° apart) and at least three diameter measurements at the quarter points of the height shall be made to determine the average height and diameter of the specimen.

6.3 *Compacted Specimens*—Soil required for compacted specimens shall be thoroughly mixed with sufficient water to produce the desired water content. If water is added to the soil, store the material in a covered container for at least 16 h prior to compaction. Compacted specimens may be prepared by compacting material in at least six layers using a split mold of circular cross section having dimensions meeting the requirements enumerated in 6.1. Specimens may be compacted to the desired density by either: (*1*) kneading or tamping each layer until the accumulative mass of the soil placed in the mold is compacted to a known volume; or (*2*) by adjusting the number of layers, the number of tamps per layer, and the force per tamp. The top of each layer shall be scarified prior to the addition of material for the next layer. The tamper used to compact the material shall have a diameter equal to or less than ½ the diameter of the mold. After a specimen is formed, with the ends perpendicular to the longitudinal axis, remove the mold and determine the mass and dimensions of the specimen using the devices described in 5.16 and 5.20. Perform one or more water content determinations on excess material used to prepare the specimen in accordance with Test Method D 2216.

NOTE 11—It is common for the unit weight of the specimen after removal from the mold to be less than the value based on the volume of the mold. This occurs as a result of the specimen swelling after removal of the lateral confinement due to the mold.

7. Mounting Specimen

7.1 *Preparations*—Before mounting the specimen in the triaxial chamber, make the following preparations:

7.1.1 Inspect the rubber membrane for flaws, pinholes, and leaks.

7.1.2 Place the membrane on the membrane expander or, if it is to be rolled onto the specimen, roll the membrane on the cap or base.

7.1.3 Check that the porous disks and specimen drainage tubes are not obstructed by passing air or water through the appropriate lines.

7.1.4 Attach the pressure-control and volume-measurement system and a pore-pressure measurement device to the chamber base.

7.2 Depending on whether the saturation portion of the test will be initiated with either a wet or dry drainage system, mount the specimen using the appropriate method, as follows in either 7.2.1 or 7.2.2. The dry mounting method is strongly recommended for specimens with initial saturation less than 90 %. The dry mounting method removes air prior to adding backpressure and lowers the backpressure needed to attain an adequate percent saturation.

NOTE 12—It is recommended that the dry mounting method be used for specimens of soils that swell appreciably when in contact with water. If the wet mounting method is used for such soils, it will be necessary to obtain the specimen dimensions after the specimen has been mounted. In such cases, it will be necessary to determine the double thickness of the membrane, the double thickness of the wet filter paper strips (if used), and the combined height of the cap, base, and porous disks (including the thickness of filter disks if they are used) so that the appropriate values may be subtracted from the measurements.

7.2.1 *Wet Mounting Method*:

7.2.1.1 Fill the specimen drainage lines and the pore-water pressure measurement device with deaired water.

7.2.1.2 Saturate the porous disks by boiling them in water for at least 10 min and allow to cool to room temperature.

7.2.1.3 If filter-paper disks are to be placed between the porous disks and specimen, saturate the paper with water prior to placement.

7.2.1.4 Place a saturated porous disk on the specimen base and wipe away all free water on the disk. If filter-paper disks are used, placed on the porous disk. Place the specimen on the disk. Next, place another filter-paper disk (if used), porous disk and the specimen cap on top of the specimen. Check that the specimen cap, specimen, filter-paper disks (if used) and porous disks are centered on the specimen base.

7.2.1.5 If filter-paper strips or a filter-paper cage are to be used, saturate the paper with water prior to placing it on the specimen. To avoid hoop tension, do not cover more than 50 % of the specimen periphery with vertical strips of filter paper.

7.2.1.6 Proceed with 7.3.

7.2.2 *Dry Mounting Method*:

7.2.2.1 Dry the specimen drainage system. This may be accomplished by allowing dry air to flow through the system prior to mounting the specimen.

7.2.2.2 Dry the porous disks in an oven and then place the disks in a desiccator to cool to room temperature prior to mounting the specimen.

7.2.2.3 Place a dry porous disk on the specimen base and place the specimen on the disk. Next, place a dry porous disk and the specimen cap on the specimen. Check that the specimen cap, porous disks, and specimen are centered on the specimen base.

NOTE 13—If desired, dry filter-paper disks may be placed between the porous disks and specimen.

7.2.2.4 If filter-paper strips or a filter-paper cage are to be used, the cage or strips may be held in place by small pieces of tape at the top and bottom.

7.3 Place the rubber membrane around the specimen and seal it at the cap and base with two rubber O-rings or other positive seal at each end. A thin coating of silicon grease on the vertical surfaces of the cap and base will aid in sealing the membrane. If filter-paper strips or a filter-paper cage are used, do not apply grease to surfaces in contact with the filter-paper.

7.4 Attach the top drainage line and check the alignment of the specimen and the specimen cap. If the dry mounting method has been used, apply a partial vacuum of approximately 35 kPa (5 lb/in.^{2}) (not to exceed the consolidation

stress) to the specimen through the top drainage line prior to checking the alignment. If there is any eccentricity, release the partial vacuum, realign the specimen and cap, and then reapply the partial vacuum. If the wet mounting method has been used, the alignment of the specimen and the specimen cap may be checked and adjusted without the use of a partial vacuum.

8. Procedure

8.1 *Prior to Saturation*—After assembling the triaxial chamber, perform the following operations:

8.1.1 Bring the axial load piston into contact with the specimen cap several times to permit proper seating and alignment of the piston with the cap. During this procedure, take care not to apply an axial load to the specimen exceeding 0.5 % of the estimated axial load at failure. When the piston is brought into contact, record the reading of the deformation indicator to three significant digits.

8.1.2 Fill the chamber with the chamber liquid, being careful to avoid trapping air or leaving an air space in the chamber.

8.2 *Saturation*—The objective of the saturation phase of the test is to fill all voids in the specimen with water without undesirable prestressing of the specimen or allowing the specimen to swell. Saturation is usually accomplished by applying back pressure to the specimen pore water to drive air into solution after saturating the system by either: (*1*) applying vacuum to the specimen and dry drainage system (lines, porous disks, pore-pressure device, filter-strips or cage, and disks) and then allowing deaired water to flow through the system and specimen while maintaining the vacuum; or (*2*) saturating the drainage system by boiling the porous disks in water and allowing water to flow through the system prior to mounting the specimen. It should be noted that placing the air into solution is a function of both time and pressure. Accordingly, removing as much air as possible prior to applying back pressure will decrease the amount of air that will have to be placed into solution and will also decrease the back pressure required for saturation. In addition, air remaining in the specimen and drainage system just prior to applying back pressure will go into solution much more readily if deaired water is used for saturation. The use of deaired water will also decrease the time and back pressure required for saturation. Many procedures have been developed to accomplish saturation. The following are suggested procedures:

8.2.1 *Starting with Initially Dry Drainage System*—Increase the partial vacuum acting on top of the specimen to the maximum available vacuum. If the effective consolidation stress under which the strength is to be determined is less than the maximum partial vacuum, apply a lower partial vacuum to the chamber. The difference between the partial vacuum applied to the specimen and the chamber should never exceed the effective consolidation stress for the test and should not be less than 35 kPa (5 lb/in.^{2}) to allow for flow through the sample. After approximately 10 min, allow deaired water to percolate from the bottom to the top of the specimen under a differential vacuum of less than 20 kPa (3 lb/in.^{2}) (Note 14).

8.2.1.1 There should always be a positive effective stress of at least 13 kPa (2 lb/in.^{2}) at the bottom of the specimen during this part of the procedure. When water appears in the burette connected to the top of the specimen, close the valve to the bottom of the specimen and fill the burette with deaired water. Next, reduce the vacuum acting on top of the specimen through the burette to atmospheric pressure while simultaneously increasing the chamber pressure by an equal amount. This process should be performed slowly such that the difference between the pore pressure measured at the bottom of the specimen and the pressure at the top of the specimen should be allowed to equalize. When the pore pressure at the bottom of the specimen stabilizes, proceed with back pressuring of the specimen pore-water as described in . To check for equalization, close the drainage valves to the specimen and measure the pore pressure change until stable. If the change is less than 5 % of the chamber pressure, the pore pressure may be assumed to be stabilized.

NOTE 14—For saturated clays, percolation may not be necessary and water can be added simultaneously at both top and bottom.

8.2.2 *Starting with Initially Saturated Drainage System*—After filling the burette connected to the top of the specimen with deaired water, apply a chamber pressure of 35 kPa (5 lb/in.^{2}) or less and open the specimen drainage valves. When the pore pressure at the bottom of the specimen stabilizes, according to the method described in 8.2.1, or when the burette reading stabilizes, back pressuring of the specimen pore-water may be initiated.

8.2.3 *Back-Presuure Saturation*—To saturate the specimen, back pressuring is usually necessary. Fig. 3 [3] provides guidance on back pressure required to attain saturation. Additional guidance on the back-pressure process is given by Black[4] and Lee.[5]

8.2.3.1 *Applying Back Pressure*—Simultaneously increase the chamber and back pressure in steps with specimen drainage valves opened so that deaired water from the burette connected to the top and bottom of the specimen may flow into the specimen. To avoid undesirable prestressing of the specimen while applying back pressure, the pressures must be applied incrementally with adequate time between increments to permit equalization of pore-water pressure throughout the specimen. The size of each increment may range from 35 kPa (5 lb/in.^{2}) up to 140 kPa (20 lb/in. ^{2}), depending on the magnitude of the desired effective consolidation stress, and the percent saturation of the specimen just prior to the addition of the increment. The difference between the chamber pressure and the back pressure during back pressuring should not exceed 35 kPa unless it is deemed necessary to control swelling of the specimen during the procedure. The difference between the chamber and back pressure must also remain within ±5 % when the pressures are raised and within± 2 % when the

[3] Lowe, J., and Johnson, T. C., "Use of Back Pressure to Increase Degree of Saturation of Triaxial Test Specimens," *Proceedings, ASCE Research Conference on Shear Strength of Cohesive Soils* , Boulder, CO, 1960

[4] Black, A. W. and Lee, K. L. (1973), "Saturating Laboratory Samples by Back Pressure," *Journal of the Soil Mechanics and Foundation Division*, ASCE, Vol. 99, No. SM1, Proc. Paper 9484, Jan., pp. 75–93.

[5] Head, K. H., (1986), *Manual of Soil Laboratory Testing, Volume 3: Effective Stress Tests*, Pentech Press Limited, Graham Lodge, London, United Kingdom, pp. 787–796.

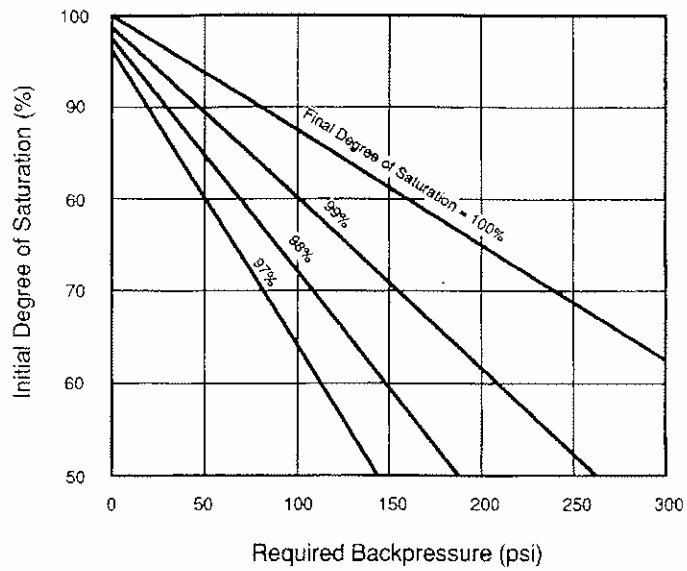

FIG. 3 Pressure to Attain Various Degrees of Saturation

pressures are constant. To check for equalization after application of a back pressure increment or after the full value of back pressure has been applied, close the specimen drainage valves and measure the change in pore-pressure over a 1-min interval. If the change in pore pressure is less than 5 % of the difference between the chamber pressure and the back pressure, another back pressure increment may be added or a measurement may be taken of the pore pressure Parameter B (see 8.2.4) to determine if saturation is completed. Specimens shall be considered to be saturated if the value of B is equal to or greater than 0.95, or if B remains unchanged with addition of back pressure increments.

NOTE 15—The relationships presented in Fig. 4 are based on the assumption that the water used for back pressuring is deaired and that the only source for air to dissolve into the water is air from the test specimen. If air pressure is used to control the back pressure, pressurized air will dissolve into the water, thus reducing the capacity of the water used for back pressure to dissolve air located in the pores of the test specimen. The problem is minimized by using a long (>5 m) tube that is impermeable to air between the air-water interface and test specimen, by separating the back-pressure water from the air by a material or fluid that is relatively impermeable to air, by periodically replacing the back-pressure water with deaired water, or by other means.

NOTE 16—Although the pore pressure Parameter B is used to determine adequate saturation, the B-value is also a function of soil stiffness. If the saturation of the sample is 100 %, the B-value measurement will increase with decreasing soil stiffness. Therefore, when testing soft soil samples, a B-value of 95 % may indicate a saturation less than 100 %.

NOTE 17—The back pressure required to saturate a compacted specimen may be higher for the wet mounting method than for the dry mounting method and may be as high as 1400 kPa (200 lb/in.^{2}).

NOTE 18—Many laboratories use differential pressure regulators and transducers to achieve the requirements for small differences between chamber and back pressure.

8.2.4 *Measurement of the Pore Pressure Parameter B*—Determine the value of the pore pressure Parameter B in accordance with 8.2.4.1 through 8.2.4.4. The pore pressure Parameter B is defined by the following equation:

$$B = \Delta u / \Delta \sigma_3 \quad (2)$$

where:

Δu = change in the specimen pore pressure that occurs as a result of a change in the chamber pressure when the specimen drainage valves are closed, and

$\Delta \sigma_3$ = change in the chamber pressure.

8.2.4.1 Close the specimen drainage valves, record the pore pressure, to the nearest 0.7 kPa (0.1 psi), and increase the chamber pressure by 70 kPa (10 lb/in.^{2}).

8.2.4.2 After approximately 2 min, determine and record the maximum value of the induced pore pressure to the nearest 0.7 kPa (0.1 psi),. For many specimens, the pore pressure may decrease after the immediate response and then increase slightly with time. If this occurs, values of Δu should be plotted with time and the asymptotic pore pressure used as the change in pore pressure. A large increase in Δu with time or values of Δu greater than $\Delta \sigma_3$ indicate a leak of chamber fluid into the specimen. Decreasing values of Δu with time may indicate a leak in that part of the pore pressure measurement system located outside of the chamber.

8.2.4.3 Calculate the B-value using Eq 2.

8.2.4.4 Reapply the same effective consolidation stress as existed prior to the B-value by reducing the chamber pressure by 70 kPa (10 lb/in.^{2}) or by alternatively, increasing the back pressure by 70 kPa. If B is continuing to increase with increasing back pressure, continue with back pressure saturation. If B is equal to or greater than 0.95 or if a plot of B versus back pressure indicates no further increase in B with increasing back pressure, initiate consolidation.

8.3 *Consolidation*—The objective of the consolidation phase of the test is to allow the specimen to reach equilibrium in a drained state at the effective consolidation stress for which a strength determination is required. During consolidation, data is obtained for use in determining when consolidation is complete and for computing a rate of strain to be used for the shear portion of the test. The consolidation procedure is as follows:

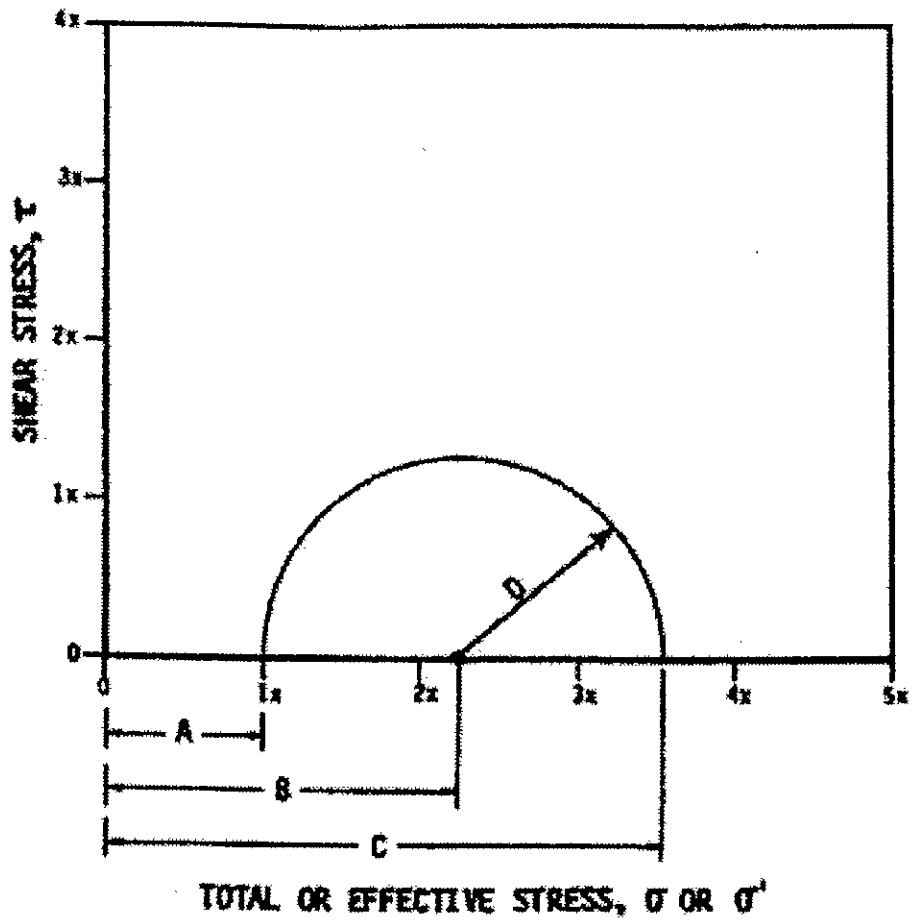

A = TOTAL OR EFFECTIVE MINOR PRINCIPAL STRESS (σ_3 or σ'_3)
B = AVERAGE OF TOTAL OR EFFECTIVE PRINCIPAL STRESSES
C = TOTAL OR EFFECTIVE MAJOR PRINCIPAL STRESS (σ_1 or σ'_1)
D = RADIUS OF THE MOHR'S CIRCLE; HALF THE PRINCIPAL STRESS DIFFERENCE

FIG. 4 Construction of Mohr Stress Circle

8.3.1 When the saturation phase of the test is completed, bring the axial load piston into contact with the specimen cap, and record the reading on the deformation indicator to three significant digits. During this procedure, take care not to apply an axial load to the specimen exceeding 0.5 % of the estimated axial load at failure. After recording the reading, raise the piston a small distance above the specimen cap, and lock the piston in place.

8.3.2 With the specimen drainage valves closed, hold the maximum back pressure constant and increase the chamber pressure until the difference between the chamber pressure and the back pressure equals the desired effective consolidation pressure. Consolidation in stages is required when filter strips for radial drainage are used, and the load increment ratio shall not exceed two.

8.3.3 Obtain an initial burette reading, and, then, open appropriate drainage valves so that the specimen may drain from both ends into the burette. At increasing intervals of elapsed time (0.1, 0.2, 0.5, 1, 2, 4, 8, 15, and 30 min and at 1, 2, 4, and 8 h, and so forth) observe and record the burette readings, and, after the 15-min reading, record the accompanying deformation indicator readings obtained by carefully bringing the piston in contact with the specimen cap. If burette and deformation indicator readings are to be plotted against the square root of time, the time intervals at which readings are taken may be adjusted to those that have easily obtained square roots, for example, 0.09, 0.25, 0.49, 1, 4, and 9 min, and so forth. Depending on soil type, time intervals may be changed to convenient time intervals which allow for adequate definition of volume change versus time.

NOTE 19—In cases where significant amounts of fines may be washed from the specimen because of high initial hydraulic gradients, it is permissible to gradually increase the chamber pressure to the total desired pressure over a period with the drainage valves open. If this is done, recording of data should begin immediately after the total pressure is reached.

8.3.4 Plot the burette and deformation indicator readings versus either the logarithm or square root of elapsed time. Allow consolidation to continue for at least one log cycle of time or one overnight period after 100 % primary consolidation has been achieved as determined in accordance with one of the procedures outlined in Test Method D 2435. A marked deviation between the slopes of the burette and deformation indicator curves toward the end of consolidation based on deformation indicator readings indicates leakage of fluid from the chamber into the specimen, and the test shall be terminated.

8.3.5 Determine the time for 50 % primary consolidation, t_{50}, in accordance with one of the procedures outlined in Test Method D 2435.

8.4 *Shear*—During shear, the chamber pressure shall be kept constant while advancing the axial load piston downward against the specimen cap using controlled axial strain as the loading criterion. Specimen drainage is not permitted during shear.

8.4.1 *Prior to Axial Loading*—Before initiating shear, perform the following:

8.4.1.1 By opening or closing the appropriate valves, isolate the specimen so that during shear the specimen pore-water pressure will be measured by the pore-pressure measurement device and no drainage will occur.

8.4.1.2 Place the chamber in position in the axial loading device. Be careful to align the axial loading device, the axial load-measuring device, and the triaxial chamber to prevent the application of a lateral force to the piston during shear.

8.4.1.3 Bring the axial load piston into contact with the specimen cap to permit proper seating and realignment of the piston with the cap. During this procedure, care should be taken not to apply an axial load to the specimen exceeding 0.5 % of the estimated axial load at failure. If the axial load-measuring device is located outside of the triaxial chamber, the chamber pressure will produce an upward force on the piston that will react against the axial loading device. In this case, start shear with the piston slightly above the specimen cap, and before the piston comes into contact with the specimen cap, either (*1*) measure and record the initial piston friction and upward thrust of the piston produced by the chamber pressure and later correct the measured axial load, or (*2*) adjust the axial load-measuring device to compensate for the friction and thrust. The variation in the axial load-measuring device reading should not exceed 0.1 % of the estimated failure load when the piston is moving downward prior to contacting the specimen cap. If the axial load-measuring device is located inside the chamber, it will not be necessary to correct or compensate for the uplift force acting on the axial loading device or for piston friction. However, if an internal load-measuring device of significant flexibility is used in combination with an external deformation indicator, correction of the deformation readings may be necessary. In both cases, record the initial reading on the pore-water pressure measurement device to the nearest 0.7 kPa (0.1 psi) immediately prior to when the piston contacts the specimen cap and the reading on the deformation indicator to three significant digits when the piston contacts the specimen cap.

8.4.1.4 Check for pore pressure stabilization. Record the pore pressure to the nearest 0.7 kPa (0.1 psi). Close the drainage valves to the specimen, and measure the pore pressure change until stable. If the change is less than 5 % of the chamber pressure, the pore pressure may be assumed to be stabilized.

8.4.2 *Axial Loading*—Apply axial load to the specimen using a rate of axial strain that will produce approximate equalization of pore pressures throughout the specimen at failure. Assuming failure will occur after 4 %, a suitable rate of strain, $'\epsilon$, may be determined from the following equation:

$$'\epsilon = 4\ \%/(10\ t_{50}) \tag{3}$$

where:

t_{50} = time value obtained in 8.3.5.

If, however, it is estimated that failure will occur at a strain value lower than 4 %, a suitable strain rate may be determined using Eq 3 by replacing 4 % with the estimated failure strain. This rate of strain will provide for determination of accurate effective stress paths in the range necessary to define effective strength envelopes.

8.4.2.1 At a minimum, record load and deformation to three significant digits, and pore-water pressure values to the nearest 0.7 kPa (0.1 psi), at increments of 0.1 to 1 % strain and, thereafter, at every 1 %. Take sufficient readings to define the stress-strain curve; hence, more frequent readings may be required in the early stages of the test and as failure is approached. Continue the loading to 15 % strain, except loading may be stopped when the principal stress difference (deviator stress) has dropped 20 % or when 5 % additional axial strain occurs after a peak in principal stress difference (deviator stress).

NOTE 20—The use of a manually adjusted null-indicating device will require nearly continuous attention to ensure the criterion for undrained shear.

9. Removing Specimen

9.1 When shear is completed, perform the following:

9.1.1 Remove the axial load and reduce the chamber and back pressures to zero.

9.1.2 With the specimen drainage valves remaining closed, quickly remove the specimen from the apparatus so that the specimen will not have time to absorb water from the porous disks.

9.1.3 Remove the rubber membrane (and the filter-paper strips or cage from the specimen if they were used), and determine the water content of the total specimen in accordance with the procedure in Test Method D 2216. (Free water remaining on the specimen after removal of the membrane should be blotted away before obtaining the water content.) In cases where there is insufficient material from trimmings for index property tests, that is, where specimens have the same diameter as the sampling tube, the specimen should be weighed prior to removing material for index property tests and a representative portion of the specimen used to determine its

final water content. Prior to placing the specimen (or portion thereof) in the oven to dry, sketch or photograph the specimen showing the mode of failure (shear plane, bulging, and so forth).

10. Calculation

10.1 Measurements and calculations shall contain three significant digits.

10.2 *Initial Specimen Properties*—Using the dry mass of the total specimen, calculate and record the initial water content, volume of solids, initial void ratio, initial percent saturation, and initial dry unit weight. Calculate the specimen volume from values measured in 6.2 or 6.3. Calculate the volume of solids by dividing the dry mass of the specimen by the specific gravity of the solids (Note 20) and dividing by the density of water. Calculate the void ratio by dividing the volume of voids by the volume of solids where the volume of voids is assumed to be the difference between the specimen volume and the volume of the solids. Calculate dry density by dividing the dry mass of the specimen by the specimen volume.

NOTE 21—The specific gravity of solids can be determined in accordance with Test Method D 854 or it may be assumed based on previous test results.

10.3 *Specimen Properties After Consolidation*—Calculate the specimen height and area after consolidation as follows:

10.3.1 Height of specimen after consolidation, H_c, is determined from the following equation:

$$H_c = H_o - \Delta H_o \tag{4}$$

where:

H_o = initial height of specimen, and
ΔH_o = change in height of specimen at end of consolidation.

See Fig. 4.

10.3.2 The cross-sectional area of the specimen after consolidation, A_c, shall be computed using one of the following methods. The choice of the method to be used depends on whether shear data are to be computed as the test is performed (in which case Method A would be used) or on which of the two methods, in the opinion of a qualified person, yield specimen conditions considered to be most representative of those after consolidation. Alternatively, the average of the two calculated areas may be appropriate.

10.3.2.1 *Method A*:

$$A_c = (V_o - \Delta V_{sat} - \Delta V_c) / H_c \tag{5}$$

where:

V_o = initial volume of specimen,
ΔV_c = change in volume of specimen during consolidation as indicated by burette readings, and
ΔV_{sat} = change in volume of specimen during saturation as follows:
ΔV_{sat} = $3V_o[\Delta H_s/H_o]$

where:

ΔH_s = change in height of the specimen during saturation.

10.3.2.2 *Method B*:

$$Ac = (V_{wf} + V_s) / H_c \tag{6}$$

where:

V_{wf} = final volume of water (based on final water content), and
V_s = volume of solids as follows:
V_s = $w_s/(G_s p_w)$

where:

w_s = specimen dry mass,
G_s = specific gravity of solids, and
p_w = density of water.

10.3.3 Using the calculated dimensions of the specimen after consolidation, and assuming that the water content after consolidation is the same as the final water content, calculate the consolidated void ratio and percent saturation.

NOTE 22—The specimen will absorb water from the porous disks and drainage lines during the time it is being removed from the apparatus. When this effect is significant, Method A will yield more reasonable values.

NOTE 23— In this test method, the equations are written such that compression and consolidation are considered positive.

10.4 *Shear Data*:

10.4.1 Calculate the axial strain, ϵ_1, for a given applied axial load as follows:

$$\epsilon_1 = \Delta H / H_c \tag{7}$$

where:

ΔH = change in height of specimen during loading as determined from deformation indicator readings, and
H_c = height of specimen after consolidation.

10.4.2 Calculate the cross-sectional area, A, for a given applied axial load as follows:

$$A = A_c / (1 - \epsilon_1) \tag{8}$$

where:

A_c = average cross-sectional area of the specimen after consolidation, and
ϵ_1 = axial strain for the given axial load.

NOTE 24—The cross-sectional area computed in this manner is based on the assumption that the specimen deforms as a right circular cylinder during shear. In cases where there is localized bulging, it may be possible to determine more accurate values for the area based on specimen dimension measurements obtained after shear.

10.4.3 Calculate the principal stress difference (deviator stress), $\sigma_1 - \sigma_3$, for a given applied axial load as follows:

$$\sigma_1 - \sigma_3 = P / A \tag{9}$$

where:

P = given applied axial load (corrected for uplift and piston friction if required as obtained in 8.4.1.3), and
A = corresponding cross-sectional area.

10.4.3.1 *Correction for Filter-Paper Strips*— For vertical filter-paper strips which extend over the total length of the specimen, apply a filter-paper strip correction to the computed values of the principal stress difference (deviator stress), if the error in principal stress difference (deviator stress) due to the strength of the filter-paper strips exceeds 5 %.

(*1*) For values of axial strain above 2 %, use the following equation to compute the correction:

$$\Delta(\sigma_1 - \sigma_3) = K_{fp} P_{fp} / A_c \quad (10)$$

where:

$\Delta(\sigma_1 - \sigma_3)$ = correction to be subtracted from the measured principal stress difference (deviator stress),
K_{fp} = load carried by filter-paper strips per unit length of perimeter covered by filter-paper,
P_{fp} = perimeter covered by filter-paper, and
A_c = cross-sectional area of specimen after consolidation.

(*2*) For values of axial strain of 2 % or less, use the following equation to compute the correction:

$$\Delta(\sigma_1 - \sigma_3) = 50\epsilon_1 K_{fp} P_{fp} / A_c \quad (11)$$

where:

ϵ_1 = axial strain (decimal form) and other terms are the same as those defined in Subparagraph (*1*) of 10.4.3.1.

NOTE 25—For filter-paper generally used in triaxial testing, K_{fp} is approximately 0.19 kN/m (1.1 lb/in.).

10.4.3.2 *Correction for Rubber Membrane*— Use the following equation to correct the principal stress difference (deviator stress) for the effect of the rubber membrane if the error in principal stress difference (deviator stress) due to the strength of the membrane exceeds 5 %:

$$\Delta(\sigma_1 - \sigma_3) = (4E_m t_m \epsilon) / D_c \quad (12)$$

where:

$\Delta(\sigma_1 - \sigma_3)$ = correction to be subtracted from the measured principal stress difference (deviator stress),
D_c = $\sqrt{4A_c/\pi}$ = diameter of specimen after consolidation,
E_m = Young's modulus for the membrane material,
t_m = thickness of the membrane, and
ϵ_1 = axial strain (decimal form).

(*1*) The Young's modulus of the membrane material may be determined by hanging a 15-mm (0.5-in.) circumferential strip of membrane using a thin rod, placing another rod through the bottom of the hanging membrane, and measuring the force per unit strain obtained by stretching the membrane. The modulus value may be computed using the following equation:

$$E_m = (F / A_m) / (\Delta L / L) \quad (13)$$

where:

E_m = Young's modulus of the membrane material,
F = force applied to stretch the membrane,
L = unstretched length of the membrane,
ΔL = change in length of the membrane due to the force, F, and
A_m = area of the membrane = $2\ t_m\ W_s$

where:

t_m = thickness of the membrane, and
W_s = width of circumferential strip, 0.5 in. (15 mm).

NOTE 26—A typical value of E_m for latex membranes is 1400 kPa (200 lb/in.).

NOTE 27—The corrections for filter-paper strips and membranes are based on simplified assumptions concerning their behavior during shear. Their actual behavior is complex, and there is not a consensus on more exact corrections.

10.4.4 Calculate the effective minor principal stress, σ'_3 for a given applied axial load as follows:

$$\sigma'_3 = \sigma_3 - \Delta u \quad (14)$$

where:

σ_3 = effective consolidation stress, and
Δu = induced pore-water pressure at the given axial load (total pore-water pressure minus the total back pressure).

10.5 *Principal Stress Difference (Deviator Stress) and Induced Pore-Water Pressure versus Strain Curves*—Prepare graphs showing relationships between principal stress difference (deviator stress) and induced pore-water pressure with axial strain, plotting deviator stress and induced pore-water pressure as ordinates and axial strain as abscissa. Select the principal stress difference (deviator stress) and axial strain at failure in accordance with 3.2.3.

10.6 *p′ – q Diagram*— Prepare a graph showing the relationship between p', $(\sigma'_1+\sigma'_3)/2$ and q, $(\sigma_1 - \sigma_3)/2$, plotting q as ordinate and p' as abscissa using the same scale. The value of p' for a given axial load may be computed as follows:

$$p' = ((\sigma_1 - \sigma_3) + 2\sigma'_3) / 2 \quad (15)$$

where:

$\sigma_1 - \sigma_3$ = principal stress difference (deviator stress), and
σ'_3 = effective minor principal stress.

10.7 Determine the major and minor principal stresses at failure based on total stresses, σ_{1f} and σ_{3f} respectively, and on effective stresses, σ'_{1f} and σ'_{3f} respectively, as follows:

$$\sigma_{3f} = \text{effective consolidation stress,} \quad (16)$$

$$\sigma_{1f} = (\sigma_1 - \sigma_3) \text{ at failure } + \sigma_{3f}, \quad (17)$$

$$\sigma'_{3f} = \sigma_{3f} - \Delta u_f, \text{ and} \quad (18)$$

$$\sigma'_{1f} = (\sigma_1 - \sigma_3) \text{ at failure} + \sigma'_{3f} \quad (19)$$

where Δu_f is the induced pore-water pressure at failure.

10.8 *Mohr Stress Circles*—If desired, construct Mohr stress circles at failure based on total and effective stresses on an arithmetic plot with shear stress as ordinate and normal stress as abscissa using the same scales. The circle based on total stresses is drawn with a radius of one half the principal stress difference (deviator stress) at failure with its center at a value equal to one half the sum of the major and minor total principal stresses. The Mohr stress circle based on effective stresses is drawn in a similar manner except that its center is at a value equal to one half the sum of the major and minor effective principal stresses.

11. Report: Test Data Sheet(s)/Form(s)

11.1 The methodology used to specify how data are recorded on the data sheet(s)/form(s), as given below, is covered in 7.2.1.3.

11.2 Record as a minimum the following general information (data):

11.2.1 Identification data and visual description of specimen, including soil classification and whether the specimen is undisturbed, compacted, or otherwise prepared,

11.2.2 Values of plastic limit and liquid limit, if determined in accordance with Test Method D 4318,

11.2.3 Value of specific gravity of solids and notation if the value was determined in accordance with Test Method D 854 or assumed,

11.2.4 Particle-size analysis, if determined in accordance with Test Method D 422,

11.2.5 Initial specimen dry unit weight, void ratio, water content, and percent saturation, (specify if the water content specimen was obtained from cuttings or the entire specimen),

NOTE 28—The specific gravity determined in accordance with Test Method D 854 is required for calculation of the saturation. An assumed specific gravity may be used provided it is noted in the test report that an assumed value was used.

11.2.6 Initial height and diameter of specimen,

11.2.7 Method followed for specimen saturation (that is, dry or wet method),

11.2.8 Total back pressure,

11.2.9 The pore pressure Parameter B at the end of saturation,

11.2.10 Effective consolidation stress,

11.2.11 Time to 50 % primary consolidation,

11.2.12 Specimen dry unit weight, void ratio, water content, and percent saturation after consolidation,

11.2.13 Specimen cross-sectional area after consolidation and method used for determination,

11.2.14 Failure criterion used,

11.2.15 The value of the principal stress difference (deviator stress) at failure and the values of the effective minor and major principal stresses at failure, (indicate when values have been corrected for effects due to membrane or filter strips, or both),

11.2.16 Axial strain at failure, percent,

11.2.17 Rate of strain, percent per minute,

11.2.18 Principal stress difference (deviator stress) and induced pore-water pressure versus axial strain curves as described in 10.5,

11.2.19 The $p' - q$ diagram as described in 10.6,

11.2.20 Mohr stress circles based on total and effective stresses, (optional),

11.2.21 Slope of angle of the failure surface (optional),

11.2.22 Failure sketch or photograph of the specimen, and

11.2.23 Remarks and notations regarding any unusual conditions such as slickensides, stratification, shells, pebbles, roots, and so forth, or other information necessary to properly interpret the results obtained, including any departures from the procedure outlined.

12. Precision and Bias

12.1 *Precision*—Test data on precision is not presented due to the nature of the soil materials tested by this procedure. It is either not feasible or too costly at this time to have ten or more laboratories participate in a round-robin testing program. Subcommittee D18.05 is seeking any data from users of this test method that might be used to make a limited statement on precision.

12.2 *Bias*—There is no accepted reference value for this test method, therefore, bias cannot be determined.

13. Keywords

13.1 back pressure saturation; cohesive soil; consolidated undrained strength; strain-controlled loading; stress-strain relationships; total and effective stresses

SUMMARY OF CHANGES

In accordance with Committee D18 policy, this section identifies the location of changes made to this standard since the last edition (2002) that may impact the use of this standard.

(1) The cap connection was changed to be a requirement of the chamber equipment in 5.4, rather than a requirement specific to the baseplate.

(2) Pressure/volume controller were added as acceptable vacuum control devices in 5.6.

(3) A requirement was added for isolating air/water interfaces (if used) from the pressure systems in 5.6.

(4) Note 15 was made 7.2.1.3, making wetting of filter paper disks mandatory when using the wet mounting method.

(5) In section 8.2.3, references concerning back pressure saturation were provided. An associated figure was added as Figure 3. subsequent sections, notes, and figures were renumbered.

(6) Footnotes 3, 4, and 5 were added.

ASTM International takes no position respecting the validity of any patent rights asserted in connection with any item mentioned in this standard. Users of this standard are expressly advised that determination of the validity of any such patent rights, and the risk of infringement of such rights, are entirely their own responsibility.

This standard is subject to revision at any time by the responsible technical committee and must be reviewed every five years and if not revised, either reapproved or withdrawn. Your comments are invited either for revision of this standard or for additional standards and should be addressed to ASTM International Headquarters. Your comments will receive careful consideration at a meeting of the responsible technical committee, which you may attend. If you feel that your comments have not received a fair hearing you should make your views known to the ASTM Committee on Standards, at the address shown below.

This standard is copyrighted by ASTM International, 100 Barr Harbor Drive, PO Box C700, West Conshohocken, PA 19428-2959, United States. Individual reprints (single or multiple copies) of this standard may be obtained by contacting ASTM at the above address or at 610-832-9585 (phone), 610-832-9555 (fax), or service@astm.org (e-mail); or through the ASTM website (www.astm.org).

APPENDIX C. HEALTH AND SAFETY PLAN AND CONTINGENCY PLAN

Health and Safety Plan for Remediation Design and Interim Action Activities

Ford Road Landfill

Elyria, Ohio

June 1, 2009

BC Project Number: 137335

Prepared by:

BROWN AND CALDWELL

4700 Lakehurst Court, Suite 100

Dublin, Ohio 43016

Prepared for:

Ford Road PRP Group

422 Creek View Lane

Roswell, Georgia 30075

Approval Page

This Health and Safety Plan (HASP) has been prepared and reviewed by the following Brown and Caldwell (BC) personnel for use at: Ford Road Landfill (137355).

	Name	Signature	Title	Date
Prepared By:	Scott Blanchard		Senior Geologist/Health & Safety Specialist	08-05-09
Reviewed By:	Mike Watkins Scott Blanchard		Site Safety Officer	08-05-09
Reviewed By:	Jim Peeples		Project Manager	8/25/09
Reviewed By:	Doug Rosco, CSP		Regional Safety Unit Manager	08-25-09
Effective Dates:	August 25, 2009	through	August 25, 2010	

TABLE OF CONTENTS

1. INTRODUCTION 1-1
1.1 Site History 1-2
1.2 Site Description 1-3
1.3 Scope of Work 1-3

2. KEY BC PROJECT PERSONNEL AND RESPONSIBILITES 2-1
2.1 Project Manager 2-1
2.2 Site Safety Officer 2-1
2.3 Regional Safety Unit Manager 2-2
2.4 BC Team Members 2-2
2.5 Subcontractors 2-3

3. HAZARD ANALYSIS 3-1
3.1 Chemical Hazards 3-1
3.2 Hazard Communication 3-8
3.3 Opening Wells and Well Vaults 3-8
3.4 Physical Hazards 3-9
3.4.1 Slip, Trips and Falls 3-9
3.4.2 Housekeeping 3-9
3.4.3 Heavy Equipment 3-10
3.4.4 Materials and Equipment Handling - Lifting 3-10
3.4.5 Excavations 3-11
3.4.6 Drilling 3-11
3.4.7 Noise 3-12
3.4.8 Underground Utilities 3-12
3.4.9 Overhead Utilities 3-13
3.4.10 Equipment Refueling 3-13
3.4.11 Electrical Hazards 3-13
3.4.12 Lockout/Tagout 3-14
3.4.13 Confined Spaces 3-15
3.4.14 Fire/Explosion 3-16
3.4.15 Sharp Objects/Cutting Utensils 3-16
3.4.16 Cutting Acetate Sample Sleeves 3-17
3.4.17 Elevated Platforms 3-17
3.4.18 Ladder Use 3-18
3.4.19 Traffic 3-18
3.4.20 Driving 3-19
3.4.21 Arc Flash Protection 3-19
3.4.22 Boating Safety 3-21

3.4.23 Building Collapse 3-22
3.4.24 Personal Safety - Urban Setting 3-23
3.5 Natural Phenomena 3-24
3.5.1 Sunburn 3-24
3.5.2 Heat Stress 3-24
3.5.3 Cold Stress 3-25
3.5.4 Lightning/Electrical Storms 3-25
3.5.5 Hurricanes 3-26
3.5.6 Tornados and Strong/Straight Line Winds 3-27
3.5.7 Earthquakes 3-27
3.6 Biological Hazards 3-28
3.6.1 Bloodborne Pathogens/Sanitary Waste 3-28
3.6.2 Rodents/Mammals 3-29
3.6.3 Reptiles/Snakes 3-29
3.6.4 Venomous Insects 3-30
3.6.5 Mosquitoes 3-30
3.6.6 Fire Ants 3-31
3.6.7 Spiders/Scorpions 3-31
3.6.8 Ticks 3-31
3.6.9 Poisonous Plants 3-32

4. PERSONAL PROTECTIVE EQUIPMENT 4-1
4.1 Conditions Requiring Level D Protection 4-1
4.2 Conditions Requiring Level C Protection 4-2
4.3 Stop Work Conditions 4-3

5. AIR MONITORING PLAN 5-1
5.1 Monitoring Instruments 5-1
5.2 Site Specific Action Levels 5-1

6. SITE CONTROL MEASURES 6-1

7. DECONTAMINATION PROCEDURES 7-1

8. TRAINING REQUIREMENTS 8-1

9. MEDICAL SURVEILLANCE REQUIREMENTS 9-1

10. CONTINGENCY PROCEDURES 10-1
10.1 Injury or Illness 10-2
10.2 Vehicle Collision or Property Damage 10-2
10.3 Fire 10-2
10.4 Underground Utilities 10-2
10.5 Site Evacuation 10-2
10.6 Spill of Hazardous Materials 10-3

11. DOCUMENTATION 11-1

LIST OF APPENDICES

Appendix A Air Monitoring Form
Appendix B Site Safety Checklist
Appendix C H&S Plan Acknowledgement Form
Appendix D Daily Tailgate Meeting Form
Appendix E Incident Investigation Form
Appendix F Miscellaneous Health and Safety Information

CRITICAL PROJECT INFORMATION

Primary Known Compound of Concern: PCBs, bis-2(ethylhexyl)phthalate, methylene chloride, motor oil, PNAs, tetrahydrofuran, VOCs, hydrogen sulfide, methane, and metals (As, Ba, Ch, Cu, Pb, Ni, Tl)

Minimum Level of Respiratory Protection: None anticipated

PPE: Level D (Hard Hat, Safety Glasses, Safety Boots); high visibility vest (if working around mobile equipment); nitrile gloves for any sample collection, leather gloves (when opening acetate liners or using hand tools).

SEE SECTION 10 FOR SITE EMERGENCY CONTINGENCY PROCEDURES

Do not endanger your own life. Survey the situation before taking any action.

BC Office Telephone	**614-410-6144**
Site Location Address	**Ford Road** **Elyria, Ohio 44035**

EMERGENCY PHONE NUMBERS: In the event of emergency, contact the Project Manager and/or Regional Safety Unit Manager.

Emergency Services (Ambulance, Fire, Police)	**911**
Poison Control	**(800) 876-4766 or (800) 222-1222**
Hospital Name	**Elyria Memorial Hospital**
Hospital Phone Number	**440-329-7500**
BC Project Manager (PM; Jim Peeples)	**Office: 614-410-3081** **Cell: 614-281-7201**
BC Site Safety Officer (SSO) **Mike Watkins** **Scott Blanchard**	**Office: 440-863-2173** **Cell: 216-410-6168** **Office: 614-410-6144** **Cell: 614-361-5849**
BC Regional Safety Unit Manager (Doug Rosco)	**Office: (303) 659-5930** **Cell: (303) 994-9675**
Corporate Risk Management	**Property Loss** **Blythe Buetzow: (925) 210-2470** **Injury** **Angela Hernandez: (925) 210-2218**
Client Contact (Patrick Steerman)	**Office: 770-992-2836** **Cell: 404-421-3275**

HOSPITAL LOCATION MAP

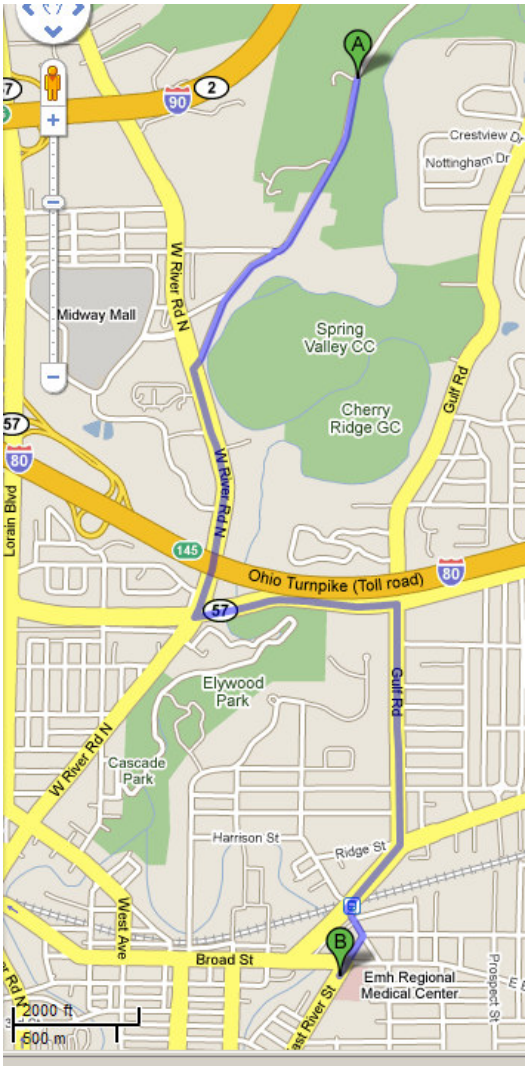

HOSPITAL DIRECTIONS:

1. Head south on Ford Rd (0.6 miles)
2. Turn left to stay on Ford Rd (0.4 miles)
3. Turn left at W River Rd N (0.8 miles)
4. Turn left at OH-113/OH-57 (0.6 miles)
5. Turn right at Gulf Rd (0.7 miles)
6. Turn right at E Bridge St (0.3 miles)
7. Turn left at E River St (0.1 miles)
8. Turn right to stay on E River St (0.1 miles)
9. Destination will be on the left

HOSPITAL INFORMATION:

Elyria Memorial Hospital
630 E River St
Elyria, OH 44035

Phone: 440-329-7500

EMERGENCY FIRST AID PROCEDURES

THE RESPONDER SHOULD HAVE APPROPRIATE TRAINING TO ADMINISTER FIRST AID OR CPR

1. Survey the situation. Do not endanger your own life. DO NOT ENTER A CONFINED SPACE TO RESCUE SOMEONE WHO HAS BEEN OVERCOME. ENSURE ALL PROTOCOLS ARE FOLLOWED INCLUDING THAT A STANDBY PERSON IS PRESENT. IF APPLICABLE, REVIEW MSDSs TO EVALUATE RESPONSE ACTIONS FOR CHEMICAL EXPOSURES.
2. Call 911 (if available) or the fire department **IMMEDIATELY**. Explain the physical injury, chemical exposure, fire, or release.
3. Decontaminate the victim if it can be done without delaying life-saving procedures or causing further injury to the victim.
4. If the victim's condition appears to be non-critical, but seems to be more severe than minor cuts, he/she should be transported to the nearest hospital by the SSO or designated personnel: let the doctor assume the responsibility for determining the severity and extent of the injury. If the condition is obviously serious, contact emergency medical services (EMS) for transport or appropriate actions.

Notify the PM and Regional Safety Unit Manager immediately and complete the appropriate incident investigation reports as soon as possible.

STOP BLEEDING AND CPR GUIDELINES	
To Stop Bleeding	**CPR**
1. Give medical statement by indicating you are trained in 1st Aid. 2. Assure: airway, breathing and circulation. 3. Use **DIRECT PRESSURE** over the wound with clean dressing or your hand (use non-permeable gloves). Direct pressure will control most bleeding. 4. Bleeding from an artery or several injury sites may require **DIRECT PRESSURE** on a **PRESSURE POINT**. Use pressure points for 30 -60 seconds to help control severe bleeding. 5. Continue primary care and seek medical aid as needed.	1. Give medical statement by indicating you are trained in CPR. 2. Arousal: Check for consciousness. 3. Call out for help, either call 911 yourself or instruct someone else to do so. It is very important to call for emergency assistance prior to initiating CPR. 4. Open airway with chin-lift. 5. Look, listen and feel for breathing. 6. If breathing is absent, give 2 slow, full rescue breaths. 7. Look, listen and feel for breathing. 8. If breathing is absent, initiate CPR; 30 compressions for each two breaths. 9. If an automated external defibrillator (AED) is available, use it in accordance with the AED instructions.

1. INTRODUCTION

Brown and Caldwell (BC) has prepared this Health and Safety Plan (HASP) for use during the Remediation Design and Interim Action activities to be conducted at Ford Road Landfill located at Ford Road, Elyria, Ohio ("the Site"). Activities conducted under BC's direction at the Site will be in compliance with applicable Occupational Safety and Health Administration (OSHA) regulations, particularly those in Title 29 of the Code of Federal Regulations, Part 1910.120 (29 CFR 1910.120), and other applicable federal, state, and local laws, regulations, and statutes. A copy of this HASP will be kept on site during scheduled field activities.

This HASP addresses the identified hazards associated with planned field activities at the Site. It presents the minimum health and safety requirements for establishing and maintaining a safe working environment during the course of work. In the event of conflicting requirements, the procedures or practices that provide the highest degree of personnel protection will be implemented. If scheduled activities change or if site conditions encountered during the course of the work are found to differ substantially from those anticipated, the Regional Safety Unit Manager and Project Manager will be informed immediately upon discovery, and appropriate changes will be made to this HASP.

BC's health and safety programs and procedures, including medical monitoring, respiratory protection, injury and illness prevention, hazard communication, and personal protective equipment (PPE), are documented in the BC Health & Safety Manual. The Health & Safety Manual is readily accessible to BC employees via the BC Pipeline. These health and safety procedures are incorporated herein by reference, and BC employees will adhere to the procedures specified in the manual.

BC's HASP has been prepared specifically for this project and is intended to address health and safety issues solely with respect to the activities of BC's own employees at the site. A copy of BC's HASP may be provided to subcontractors in an effort to help them identify expected conditions at the site and general site hazards. The subcontractor shall remain responsible for identifying and evaluating hazards at the site as they pertain to their activities and for taking appropriate precautions. For example, BC's HASP does not address specific hazards associated with tasks and equipment that are particular to the subcontractor's scope of work and site activities (e.g., operation of a drill rig, excavator, crane or other equipment). Subcontractors are not to rely on BC's HASP to identify all hazards that may be present at the Site.

Subcontractors are responsible for developing, maintaining, and implementing their own health and safety programs, policies, procedures and equipment as necessary to protect their workers, and others, from their activities. Subcontractors shall operate equipment in accordance with their standard operating procedures as well as manufacturer's specifications. Any project monitoring activities conducted by BC at the Site shall not in any way relieve subcontractors of their critical obligation to monitor their operations and employees for the determination of exposure to hazards that may be present at the Site and to provide required guidance and protection. If requested,

subcontractors will provide BC with a copy of their own HASP for this project or other health and safety program documents for review.

1.1 Site History

The Site is a 15-acre inactive facility located in the City of Elyria within Lorain County, Ohio. The Site is located on the northern edge of Elyria adjacent to Ford Road, about 1.5 miles from interchange 8 of the Ohio Turnpike/Interstate 90 (Figure 1-1). There are approximately 2,500 people living within a one-mile radius of the Site. The nearest resident is approximately 200 feet northwest of the Site. The current owner of the Site is the Lorain County Metropolitan Parks District (the Park District).

An intermittent stream and a sewer main that is covered with rip-rap are present to the north of the landfill and a ravine and rural land are present to the south. The Black River is located relatively close to the east side of the landfill and the west side is bordered by Ford Road, and beyond Ford Road to the west is the Black River Preserve (a Park District Park). The approximate geographic coordinates of the Site are 41° 22' 26.0" N latitude and 082° 07' 30.0" W longitude. The USEPA spill identification number is 0574, and the USEPA facility identification number is OHD 980510002. Figure 1-2 presents a site plan indicating Site features and previous sample locations.

The Remedial Investigation and Feasibility Study (RI/FS) and the ROD conclude that the slopes at the former landfill appear to be stable. The steeper slopes at the landfill have remained in their current position for more than 35 years without evidence of slope failure aside from minor solifluction and slumping of surface soil. The majority of the former landfill appears to have an adequate cover of low-permeability soil. Landfill wastes are largely covered, with the exception of some wastes, miscellaneous debris, and white goods that are located along the southern and northern landfill flanks. The landfill top is well graded and gently slopes southwest to northeast. A portion of the eastern side slope has a grade of approximately 2:1, horizontal to vertical (H:V), while the northern and southern portions of the east side slopes and the north and south side slopes are steeper, with maximum grades of approximately 1.2:1. The upper, gently-sloping portion of the landfill supports a dense growth of grass that is well maintained. The side slopes are generally covered with a dense growth of mature trees.

Prior to the start of landfill activities, the area sloped gently toward the river and included a wider flood plain than what is currently present. Much of the sloped area has been filled to approximately the same level as Ford Road, and a portion of the flood plain was incorporated into the landfill. Land-filling activities are believed to have begun with the placing of local municipal waste extending east from Ford Road in the early 1900s. The Site operated as a public landfill, charging tipping fees, until 1964. The Site was leased in 1964 and operated by several entities as a landfill until June 1974. During operation of the landfill in the 1960s and 1970s, municipal and industrial wastes in drums and in bulk were accepted, including, but not limited to: 700 tons of hazardous material; 3.3 million pounds of chemical wastes; and sludge (reportedly 32,000 gallons per day), from 1963 to 1970. Many of these wastes were burned onsite. Foundry sand, slag, and dried sludges were often used for cover material. Landfill operations ended in 1974.

Environmental officials conducted several investigations over the years at the Site and found that leachate was seeping from the landfill. Leachate was found to be discharging into the Black River

by Ohio EPA (OEPA) and the Elyria City Department of Health during an inspection completed in 1972. The leachate was sampled in 1980 and found to contain a variety of potentially hazardous substances.

In 1980, with the approval of USEPA and the Park District, a former operator implemented a voluntary response action involving the addition and grading of cover soil (including placing up to 7.5 feet of low-permeability cover materials) to intercept and contain reported observations of leachate emanating from the Site. In addition, some refuse observed near the river was removed and transported to the Lorain County Landfill.

1.2 Site Description

Surface water at the site currently drains in three directions. Drainage on the north side of the landfill flows into an intermittent stream that goes into the Black River. Surface runoff from the east side of the area drains directly to the river. The south side of the site drains into a ravine that was created by the landfill operations. Runoff from this ravine crosses a former access road and enters a wetland that also goes into the Black River.

Topgraphy on the site falls off in elevation dramatically (approximately 80 feet) from the top of the landfill cap to the Black River Flood plain. The edges and side slopes of the landfill, as well as the floodplain are covered in unmanaged vegetation.

The slope adjacent to the Black River has undergone some slumping of surface soil. Slope stability investigation and remediation is part of BC's tasks.

1.3 Scope of Work

BC is providing engineering and consulting services to the Ford Rd PRP Group. The scope of work for this project will include work associated with investigation and remedial design, submittal preparation, responding to comments, revision, negotiations, meetings and other work necessary to prepare and obtain final approval of the Remedial Design (RD). BC understands that the Project Coordinator will serve as the focal point for communication between BC, the PRP Group and the various regulatory agencies. The Project Coordinator will work quickly to resolve any issues that may impact BC's schedule and will address issues requiring decisions or approvals from the PRP Group. BC has divided the proposed work for the RD into eight different phases ("tasks") as follows:

- Project Management;
- Meetings;
- RD Work Plan
- Health and Safety Plan;
- Optional Interim Action or Fencing Plan;
- RD Field Investigation;
- Remedial Design; and
- Remedial Action Cost Estimate.

Potential field tasks related to the interim action and RD performed by BC include:

- Surveying;
- Soil sampling for geotechnical and/or chemical parameters;
- Landfill cover surveys;
- Ecological surveys and/or sampling;
- Soil borings outside the limits of waste;
- Well/piezometer installation and/or abandonment;
- Hand borings to determine landfill cap thickness;
- Potentiometric measurements;
- Sampling of ground water;
- Sampling of leachate;

Potential field tasks performed by subcontractors, where BC may be conducting field oversight include:

- Installation and maintenance of fencing;
- Surveying;
- Ecological Surveys and/or sampling
- Clearing and grubbing;
- Excavation and relocation of waste within the landfill;
- Excavation of contaminated soils;
- Landfill cap maintenance;
- Placement of structural fill;
- Revegetation and habitat restoration; and,
- Sheetpile installation.

2. KEY BC PROJECT PERSONNEL AND RESPONSIBILITES

Jim Peeples is the Project Manager (PM). Doug Rosco is the Regional Safety Unit Manager (RSUM). Mike Watkins and Scott Blanchard have been designated as the BC Site Safety Officers (SSO) for this project. The BC project field staff have completed 40 hours of comprehensive health and safety training, which meets the requirements of 29 CFR 1910.120.

The responsibilities of key BC project personnel are presented below.

2.1 Project Manager

The PM is responsible for evaluating hazards anticipated at the Site and working with designated field staff and the RSUM to prepare this HASP to address the identified hazards. The PM is also responsible for the following.

- Informing project participants of safety and health hazards identified at the Site.
- Providing a copy of this HASP to BC project participants and a copy to each BC subcontractor prior to the start of field activities.
- Ensuring that the BC project team is adequately trained and perform safety briefings in accordance with this HASP.
- Providing the resources necessary for maintaining a safe and healthy work environment for BC personnel.
- Communicating project safety concerns to the RSUM for determining corrective actions.

2.2 Site Safety Officer

The SSO has on-Site responsibility for verifying that BC team members, including subcontractors, comply with the provisions of this HASP. The SSO has the authority to monitor and correct health and safety issues as noted on-Site. The SSO is responsible for the following.

- Reporting unforeseen or unsafe conditions or work practices at the Site to the PM or RSUM.
- Stopping operations that threaten the health and safety of BC field team or members of the surrounding community.
- Monitoring the safety performance of Site personnel to evaluate the effectiveness of health and safety procedures.
- Performing air monitoring, as necessary, as prescribed in this HASP.
- Documenting field team compliance with this HASP by completing the appropriate BC forms contained in the Appendices of this document.
- Conducting daily tailgate safety meetings and assuring that project personnel understand the requirements of this HASP (as documented by each BC field team member's signature on the Signature Page).

- Limiting access to BC work areas on the Site to BC field team members and authorized personnel.
- Enforcing the "buddy system" as appropriate for Site activities.
- Performing periodic inspections to evaluate safety practices at the Site.
- Identifying the location and route to nearby medical facility and emergency contact information and coordinating appropriate responses in the event of emergency.

2.3 Regional Safety Unit Manager

The RSUM is responsible for final review and modification of this HASP. Modifications to this HASP that result in less protective measures than those specified may not be employed by the PM or SSO without the approval of the RSUM. In addition, the RSUM has the following responsibilities.

- Developing and coordinating the overall BC health and safety program.
- Advising the PM and SSO on matters relating to health and safety on this project.
- Recommending appropriate safeguards and procedures.
- Modifying this HASP, if necessary, and approving changes in health and safety procedures at the Site.

2.4 BC Team Members

BC employees and subcontractors are responsible for familiarizing themselves with health and safety aspects of the project and for conducting their activities in a safe manner. This includes attending site briefings, communicating health and safety observations and concerns to the SSO, maintaining current medical and training status and maintaining and using proper tools, equipment and PPE. Proper work practices are part of ensuring a safe and healthful working environment. Safe work practices are essential and it is the responsibility of BC employees and team members to follow safe work practices when conducting scheduled activities. Safe work practices to be employed during the entire duration of fieldwork include, but are not limited to, the following.

- Following the provisions of this HASP, company health and safety procedures and regulatory requirements.
- Reviewing safety-related information from other parties (i.e., client or contractors) as it relates to BC's activities.
- Inspecting personal protective equipment (PPE) before on-site use, using only intact protective clothing and related gear, and changing suits, gloves, etc. if they are damaged or beyond their useful service life.
- Set up, assemble, and check out all equipment and tools for integrity and proper function before starting work activities.
- Assisting in and evaluating the effectiveness of Site procedures (including decontamination) for personnel, protective equipment, sampling equipment and containers, and heavy equipment and vehicles.
- Practice the "buddy system" as appropriate for high hazard site activities as directed by the SSO.

- Do not use faulty or suspect equipment.
- Do not use hands to wipe sweat away from face. Use a clean towel or paper towels.
- Practice contamination avoidance whenever possible.
- Smoking, eating, drinking, or applying cosmetics while in chemically-affected areas of the site (including exclusion areas) or before proper decontamination is strictly prohibited.
- Wash hands, face and arms before taking rest and lunch breaks and before leaving the site and the end of the workday.
- Check in and out with the SSO upon arrival and departure from the site.
- Perform decontamination procedures as specified in this HASP.
- Notify the SSO immediately if there is an incident that causes an injury, illness or property loss. Incidents that could have resulted in injury, illness or property loss (close call) will also be reported to the SSO.
- Do no approach or enter an area where a hazardous environment (i.e., oxygen deficiency, toxic or explosive) may exist without employing necessary engineering controls, proper PPE and appropriate support personnel.
- Use respirators correctly and as required for the Site; check the fit of the respirator with a negative or positive pressure test; do not wear respirator with facial hair or other conditions that prevent a face-to-facepiece seal.
- Confined spaces will not be entered without appropriate evaluation, equipment, training and support personnel.

2.5 Subcontractors

Subcontractor personnel are expected to comply fully with subcontractor's HASP and to observe the minimum safety guidelines applicable to their activities which may be identified in the BC HASP. Failure to do so may result in the removal of the subcontractor or any of the subcontractor's workers from the job site.

3. HAZARD ANALYSIS

Hazards at the Site may include physical hazards, chemical hazards or biological hazards. Each type of identified hazard is addressed in the following sections. Hazards that are the specialty of a subcontractor (i.e., operation of a drill rig or excavator) are not addressed in this HASP. Subcontractors are responsible for identifying potential hazards associated with their activities and implementing proper controls.

3.1 Chemical Hazards

Exposure pathways of concern for chemical compounds that may be present at the Site are inhalation of airborne contaminants, direct skin contact with contaminated materials, and incidental ingestion of affected media. Wearing protective equipment and following decontamination procedures listed in Section 7 can minimize dermal contact and incidental ingestion. To minimize inhalation hazards, dust or vapor control measures will be implemented, where necessary, and action levels will be observed during scheduled activities. Site-specific action levels and air monitoring requirements are presented in Section 5. The following chemicals have been detected at a concentration that may approach or exceed an occupational exposure limit:

Known or Suspected Compounds	Source (soil/water/sludge, etc.)	Known Concentration Range (ppm, mg/kg, mg/l)	
		Lowest	Highest
Aroclor 1242	LNAPL, Soil	ND	1.60
Arsenic	Groundwater, Soil	0.045	1.9
Barium	Leachate, Groundwater	0.297	57.9
Bis-2(ethylhexyl)phthalate	Leachate		7.5
Chromium	Groundwater, Soil, Leachate,	12.1	12.6
Copper	Soil	8.1	9.080
Hydrogen Sulfide	Landfill Gas	Unknown	Unknown
Lead	Groundwater, Soil,, Leachate	3.3	8.910
Methane	Landfill Gas	0	100% LEL
Methylene Chloride	Groundwater	ND	2.978
Motor Oil	LNAPL		1,100
Nickel	Soil, Groundwater	13.6	3.490
PAHs (PNAs)	LNAPL, Soil	ND	0.390
Tetrahydrofuran	Leachate		336
Thallium	Groundwater	ND	0.143
VOC	Landfill Gas	0	60 ppm on PID

Chemical descriptions of chemicals of concern, including health effects and exposure limits, are presented in the following paragraphs. Each chemical description includes physical and odor recognition characteristics, the health effects associated with exposure, and exposure limits expressed as an 8-hour time-weighted average (TWA). Provided are federal OSHA (OSHA) permissible exposure limits (PELs; located in 29 CFR 1910.1000); California OSHA (Cal/OSHA) PELs (located in 8 CCR 5155); and the American Conference of Governmental Industrial Hygienists (ACGIH) threshold limit values (TLVs). For sites outside California, Cal/OSHA PELs are included as an additional reference.

AROCLOR

Aroclor (containing variable amounts of chlorine) is a PCB used in heat transfer fluids, hydraulic fluids, lubricants, and insecticides. It is a confirmed carcinogen with experimental carcinogenic and neoplastigenic data. It is moderately toxic by ingestion and intraperitoneal routes. It also exhibits experimental teratogenic and reproductive effects. When heated to decomposition, it emits toxic fumes of Cl^-.

- The OSHA PEL is listed as 0.5 mg/m^3 for 54% chlorine content (as a PCB) and 1.0 mg/m^3 for 42% chlorine content (as a PCB).
- The Cal/OSHA PEL is listed as 0.5 mg/m^3 for 54% chlorine content (as a PCB) and 1.0 mg/m^3 for 42% chlorine content (as a PCB).
- The TLV is listed as 0.5 mg/m3 for 54% chlorine content (as a PCB) and 1.0 mg/m3 for 42% chlorine content (as a PCB).

Note: Published exposure limits designate a skin notation indicating that dermal contact can contribute to the overall exposure.

ARSENIC

Metallic arsenic is most commonly a gray, brittle, crystalline solid. It can also be in a black or yellow amorphous form. Arsenic is also commonly found in its volatile white trioxide form. Arsenic is used in several insecticides, herbicides, defoliants, desiccants, and rodenticides and appears in a variety of forms. It is also used in tanning, pigment production, glass manufacturing, wood preservation, and anti-fouling coatings. Arsenic is classified as a known carcinogen.

Short-term exposure to arsenic can cause marked irritation of the stomach and intestines with nausea, vomiting, and diarrhea. In severe cases the vomiting and stools are bloody and the exposed individual goes into collapse and shock with weak, rapid pulse, cold sweats, coma, and death. Inorganic arsenicals are more toxic than organic arsenicals, and the trivalent form is more toxic than the pentavalent form. Acute arsenic poisoning usually results from ingestion exposures. Blood cell changes, blood vessel damage, and impaired nerve function can also result from chronic arsenic ingestion. Other effects include skin changes, irritation of the throat, increased risk of cancer of the liver, bladder, kidney, and lung.

- The OSHA PEL is listed as 0.01 mg/m3 for inorganic forms of arsenic and 0.5 mg/m3 for organic forms.

- The Cal/OSHA PEL is listed as 0.01 mg/m3 for inorganic forms of arsenic and 0.2 mg/m3 for organic forms.
- The TLV is listed as 0.01 mg/m3 for arsenic and inorganic arsenic compounds.

BARIUM

Barium is a silvery-white metal found in nature. It occurs combined with other chemicals such as sulfur or carbon or oxygen. These combinations are called compounds. Barium compounds can also be produced by industry.

Barium compounds are used by the oil and gas industries to make drilling muds. They are also used to make paint, bricks, tiles, glass and rubber.

Barium compounds that dissolve well in water may cause harmful health effects in people. Ingesting high levels of barium compounds that dissolve well in water over the short term has resulted in difficulties in breathing, increased blood pressure, changes in heart rhythm, stomach irritation, brain swelling, muscle weakness and damage to the liver, kidney, heart and spleen.

- The OSHA PEL is listed as 0.5 mg/m3.
- The Cal/OSHA PEL is listed as 0.5 mg/m3 for soluble compounds (as Ba).
- The TLV is listed as 0.5 mg/m3 for soluble compounds (as Ba).

DIOCTYL PHTHALATE [BIS(2-ETHYLHEXYL)PHTHALATE]

Dioctyl phthalate (also known as di-sec-octyl phthalate; Di (2-ethylhexyl) phthalate (DEHP); or DOP) is a colorless, oily liquid with a slight odor. Exposure to high concentrations of dioctyl phthalate may result in skin and eye irritation. Short-term exposure to di-sec octyl phthalate can cause mild gastric disturbances. Di-sec octyl phthalate-affected dust can cause eye and mucous membrane irritation. Target organs are the upper respiratory system, gastrointestinal tract, and the eyes. DOP has been listed as a carcinogen or potential carcinogen for hazard communication purposes by National Toxicology Program (Annual Report on Carcinogens) and International Agency for Research on Cancer Monographs.

- The OSHA PEL is listed as 5 mg/m3.
- The Cal/OSHA PEL is listed as 5 mg/m3.
- The TLV is listed as 5 mg/m3.

CHROMIUM

Chromium is a greenish-blue, odorless solid. Chromic acid and its salts have a corrosive action on the skin and mucous membranes. The lesions are confined to the exposed parts, affecting chiefly the skin of the hands and forearms and the mucous membranes of the nasal septum. Chromate salts are human and experimental carcinogens of the lungs, nasal cavity, and paranasal sinus, and are also experimental carcinogens of the stomach and larynx. Hexavalent compounds are more toxic than trivalent. Exposure to chromium has been

associated with lung changes in workers exposed to chromium alloys. Chromium dust exposure may cause minor lung changes.

- The OSHA PEL is listed as 0.005 mg/m3 for hexavalent chromium (Cr[VI]), 0.5 mg/m3 for Cr (II and III) compounds, and 1.0 mg/m3 for chromium as a metal.
- The Cal/OSHA PEL is listed as 0.005 mg/m3 for hexavalent chromium (Cr[VI]), and 0.5 mg/m3 for metal and Cr (II and III) compounds.
- The TLV is listed as 0.01 mg/m3 for insoluble Cr (VI) compounds, 0.05 mg/m3 for soluble Cr (VI) compounds, and 0.5 mg/m3 for metal and Cr III compounds.

COPPER

In its elemental form, copper is a common metal with a distinct reddish color. Human systemic effects by ingestion include nausea and vomiting. In animals, inhalation of copper dust has caused hemolysis of the red blood cells, deposition of hemofuscin in the liver and pancreas, and injury to the lung cells. Short-term exposure to copper dust can cause a feeling of illness similar to the common cold with sensations of chills and stuffiness of the head. Small copper particles may enter the eye and cause irritation, discoloration, and damage.

- The OSHA PEL is listed as 0.1 mg/m3 for copper as a fume, and 1.0 mg/m3 for dust.
- The Cal/OSHA PEL is listed as 0.1 mg/m3 for copper as a fume, and 1.0 mg/m3 for dust.
- The TLV is listed as 0.2 mg/m3 for copper as a fume, and 1.0 mg/m3 for dust.

HYDROGEN SULFIDE

Hydrogen Sulfide (H2S) is a colorless gas that smells like rotten eggs (from the sulphur). Often referred to as "sewer gas," hydrogen sulfide is highly poisonous. Usually, the poisoning caused by hydrogen sulfide is though inhalation and has a toxicity similar to cyanide. It is found in petroleum and natural gas and is sometimes present in ground water. Natural gas can contain up to 28% hydrogen sulfide gas and may be considered an air pollutant when found near a natural gas production area or refinery.

Low Levels of H2S:

The odor or hydrogen sulfide gas can be perceived at levels as low as 10 ppb (parts per billion). At levels of 50-100 ppm (parts per million), it may cause the human sense of smell to fail. Low levels can cause eye irritation, dizziness, coughing, and headache.

High levels of H2S:

At high exposures (usually greater than 300 ppm), H2S has the amazing effect of causing the nose to stop perceiving its smell after a few inhalations, which may lead to the inhalation of a toxic or fatal dose (which can occur at 600 ppm). At high levels, hydrogen sulfide gas may paralyze the lungs, meaning that the victim may then be unable to escape from the toxic gas without assistance.

Deaths are not uncommon when people enter poorly ventilated spaces such as deep wells, underground tanks or sewer systems. Since H2S gas is heavier than air, its concentration is highest near the bottom of enclosed spaces.

H2S has a TLV of 10 ppm.

LEAD

Lead (inorganic) is a bluish-white, silver or gray odorless solid. Short-term exposure to lead can cause decreased appetite, insomnia, headache, muscle and joint pain, colic, and constipation. Considerable data exist on the effects of lead exposure in humans. It is a poison by ingestion and a suspected human carcinogen of the lungs and kidneys. There are data to suggest that lead is a mutagen and can cause reproductive effects. Human systemic effects by ingestion and inhalation (the two routes of absorption) include loss of appetite, anemia, malaise, insomnia, headache, irritability, muscle and joint pains, tremors, flaccid paralysis without anesthesia, hallucinations and distorted perceptions, muscle weakness, gastritis, and liver changes. Recent experimental evidence suggests that blood levels of lead below 10 μg/dl (micrograms per deciliter) can have the effect of diminishing the IQ scores of children.

- The OSHA PEL is listed as 0.05 mg/m3 and the OSHA PEL for tetraethyl lead and tetramethyl lead is listed as 0.075 mg/m3.
- The Cal/OSHA PEL for elemental lead is listed as 0.05 mg/m3 and the Cal/OSHA PEL for tetraethyl lead and tetramethyl lead is listed as 0.075 mg/m3.
- The TLV for elemental lead is listed as 0.05 mg/m3, the TLV for tetraethyl lead is 0.1 mg/m3 and the TLV for tetramethyl lead is 0.15 mg/m3.

Note: Published exposure limits designate a skin notation indicating that dermal contact (to organic forms) can contribute to the overall exposure.

METHANE

Municipal solid waste landfills are the largest source of human-related methane emissions in the United States, accounting for about 34 percent of these emissions. At the same time, methane emissions from landfills represent a lost opportunity to capture and use a significant energy resource. Landfill gas (LFG) is created as solid waste decomposes in a landfill. This gas consists of about 50 percent methane (CH4), the primary component of natural gas, about 50 percent carbon dioxide (CO2), and a small amount of non-methane organic compounds.

At room temperature and pressure, methane is a colorless, odorless gas. It has boiling point of −162°C at 1 atmosphere pressure and is highly flammable.

Methane is not toxic by any route. The immediate health hazard is that it may cause thermal burns. It is flammable and may form mixtures with air that are flammable or explosive. Methane is violently reactive with oxidizers, halogens, and some halogen compounds. Methane is an asphyxiant and may displace oxygen in a workplace atmosphere. Asphyxia may result if the oxygen concentration is reduced to below 18% by displacement. The

concentrations at which flammable or explosive mixtures form are much lower than the concentration at which asphyxiation risk is significant.

The flammable range of methane is 5-15%.

METHYLENE CHLORIDE

Methylene chloride (also known as dichloromethane) is a colorless liquid with a chloroform-like odor. It is an experimental carcinogen and tumorigen. Human systemic effects upon inhalation include altered sleep time, convulsions, euphoria, and change in cardiac rate. It is an eye and severe skin irritant. Data suggest it may be a mutagen in humans. Methylene chloride also exhibits the unique effect of elevating the blood carboxyhemoglobin levels, similar to the effect of exposure to carbon monoxide (CO). In fact, evidence suggests that methylene chloride can convert to CO in the body. Ingestion of methylene chloride can lead to systemic effects such as light headedness and numbness of the limbs. Inhalation of methylene chloride shows symptoms such as fatigue or weakness and sleepiness.

- The OSHA PEL is listed as 25 ppm.
- The Cal/OSHA PEL is listed as 25 ppm.
- The TLV is listed as 50 ppm.

MOTOR OIL

Motor oil is a dark viscous liquid. It is composed of aliphatic, olefinic, naphthenic (cycloparaffinic), and aromatic hydrocarbons, as well as additives depending on specific uses. Motor oil has a burning lubricating oil odor. Short-term exposure via dermal contact with motor oil can cause irritation to the skin and dermatitis. Inhalation of motor oil can cause aspiration. Target organs are the upper respiratory system and the skin.

- No OSHA PEL, Cal/OSHA PEL, or ACGIH TLV is listed for motor oil.

NICKEL

Nickel is a silvery gray, metallic, odorless metal. It is a confirmed carcinogen with experimental carcinogenic, neoplastigenic, tumorigenic, and teratogenic data. Nickel is a poison by ingestion, subcutaneous, and intravenous routes. Hypersensitivity to nickel is common and can cause allergic contact dermatitis, pulmonary asthma, and conjunctivitis. Exposure to nickel can cause pneumonitis. Nickel and its compounds have also been reported to cause cancer of the lungs and sinuses. Nickel itself is not very toxic if swallowed.

- The OSHA PEL is listed as 1.0 mg/m3 for elemental, insoluble and soluble compounds, as Ni.
- The Cal/OSHA PEL is listed as 1.0 mg/m3 for metal and insoluble compounds (as Ni), and 0.1 mg/m3 for soluble compounds.
- The TLV is listed as 1.5 mg/m3 for elemental compounds, 0.2 mg/m3 for insoluble compounds, and 0.1 mg/m3 for soluble inorganiccompounds and nickel subsulfide, as Ni.

POLYNUCLEAR AROMATIC HYDROCARBONS (PNAs)

PNAs constitute a class of materials of which benzo[a]pyrene (BaP) is one of the most common and also the most hazardous. In general, PNAs can be formed in any hydrocarbon combustion process. The less efficient the combustion process, the higher the PNA emission factor is likely to be. The major sources are stationary sources, such as heat and power generation, refuse burning, industrial activity, such as coke ovens, and coal refuse heaps. PNAs may also be released from oil spills. Because of the large number of sources, people are exposed to very low levels of PNAs every day.

Certain PNAs, such as the more common BaP, have been demonstrated to be carcinogenic at relatively high exposure levels in laboratory animals. BaP is a yellowish crystalline solid that consists of five benzene rings joined together. It is highly soluble in fat tissue and has been shown to produce tumors in the stomachs of laboratory mice. In addition, skin cancers have been induced in a variety of animals at very low levels and unspecified lengths of application.

It is important to recognize the PNAs' ability to adhere to soil and other particulates. Therefore, good particulate emission controls and the use of air purifying respirators with particulate filters are required for protection against airborne PNA hazards.

- The OSHA PEL is listed as 0.2 mg/m3 (as coal tar pitch volatiles).
- The Cal/OSHA PEL is listed as 0.2 mg/m3 (as coal tar pitch volatiles).
- The TLV is listed as 0.2 mg/m3 (coal tar pitch volatiles, as benzene soluble aerosol).

TETRAHYDROFURAN

Tetrahydrofuran is a colorless, mobile liquid with a faintly fruity, ether-like odor. Exposure to tetrahydrofuran can occur via inhalation, ingestion, and eye or skin contact. Acute exposure: The signs and symptoms of acute overexposure to tetrahydrofuran include severe headache and a marked decrease in white blood cell count. Based on effects seen in animals, exposure to tetrahydrofuran may cause redness and inflammation of the eyes and eyelids; coughing and sneezing; and difficult breathing.

- The OSHA PEL is listed as 590 mg/m3 (200 ppm).
- The TLV is listed as 590 mg/m3 (200 ppm).

THALLIUM

Thallium in solid form exists as thallium sulfate, thallium acetate, and thallium nitrate, all of which are colorless, odorless solids. Soluble thallium compounds are very toxic and cause cumulative intoxication. Many deaths have resulted from swallowing these compounds. Swallowing soluble thallium compounds can cause nausea, vomiting, diarrhea, abdominal pain, and bleeding from the gut. These symptoms are followed by drooping of the eyelids, crossed eyes, weakness, numbness, tingling of the arms and legs, trembling, and pain and tightness of the chest. Hair may fall out after two to three weeks. Severe intoxication may result in prostration, rapid heartbeat, convulsions, and psychosis. Recovery may be

complete, but permanent effects such as staggering, visual difficulties, trembling, and mental abnormalities have been reported, and liver and kidney damage have occurred.

- The OSHA PEL is listed as 0.1 mg/m3 for soluble compounds.
- The Cal/OSHA PEL is listed as 0.1 mg/m3 for soluble compounds.
- The TLV is listed as 0.1 mg/m3 for elemental and soluble compounds.

Note: Published exposure limits designate a skin notation indicating that dermal contact can contribute to the overall exposure.

ZINC

Zinc is a bluish-white, lustrous metallic element, and zinc oxide is a white fume. Short-term exposure to zinc oxide fume can cause a flu-like illness called metal fume fever. Symptoms of metal fume fever include headache, fever, chills, muscle ache, nausea, vomiting, weakness, and tiredness. Pure zinc powder, dust, and fume is relatively non-toxic to humans by inhalation. However, the inhalation of zinc oxides may cause a sweet taste, throat dryness, cough, weakness, generalized aches, chills, nausea, and vomiting. Zinc is flammable in the form of dust when exposed to heat or flame and may ignite spontaneously in air when dry. It is explosive in the form of dust when reacted with acids.

- The OSHA PEL is listed as 15 mg/m3 for total zinc oxide dust, and 5 mg/m3 for zinc oxide fume and the respirable fraction of dust.
- The Cal/OSHA PEL is listed as 10 mg/m3 for total zinc oxide dust, and 5 mg/m3 for zinc oxide fume and the respirable fraction of dust.
- The TLV is listed as 2 mg/m3 for respirable zinc oxide and 0.01 mg/m3 for zinc chromates (as Cr).

3.2 Hazard Communication

In accordance with the Hazard Communication standard, material safety data sheets (MSDSs) will be maintained on site for chemical products used by BC personnel at the Site (i.e., spray paint, PVC cement, etc.). Subcontractors will be responsible for maintaining MSDSs for chemical products they bring on Site. In addition, containers will be clearly labeled in English to indicate their contents and appropriate hazard warnings. Please note that labeling containers includes, but is not limited to, any waste, used PPE, and/or decontamination materials collected.

3.3 Opening Wells and Well Vaults

Direct-reading instrumentation specified in Section 5 will be used to monitor any work in a well vault at the site where VOCs are a concern. The well vault will be opened carefully with the BC employee staying upwind as much as possible and then left open for a minimum of three minutes to allow the vault to vent. If the well cap is then removed, allow another three minutes for the well head to vent before proceeding. Please note that if there are other established protocols that differ from 3 minutes; the more protective time increment will be followed. Personnel should stay upwind as much as possible while working in and around the vault.

When removing a well cap, personnel will remain upwind as much as possible and will carefully remove the cap by opening it away from them in order to minimize the likelihood of exposure to vapors. Personnel will wait a minimum of three minutes to allow the well to vent before proceeding.

3.4 Physical Hazards

Select areas of the site have exposed waste protruding from the landfill cap. The waste mainly contains sharp glass and metal. Please be mindful of these areas and avoid if at all possible.

The landfill is very hilly and has a number of steep hillsides. The hillsides provide a falling hazard and the possibility of other physical injuries, such as ankle sprains. Avoid standing at the top and attempting to walk up steep slopes.

The following physical hazards, as marked below, have been identified and may be encountered during scheduled field activities.

- ☒ Slips, Trips and Falls
- ☒ Heavy Equipment
- ☒ Excavations
- ☒ Noise
- ☒ Overhead Utilities
- ☐ Electrical Equipment
- ☐ Confined Spaces
- ☒ Sharp Objects/Cutting
- ☐ Elevated Platforms
- ☒ Traffic
- ☐ Arc Flash Protection
- ☐ Building Collapse
- ☒ Housekeeping
- ☒ Materials and Equipment Handling - Lifting
- ☒ Drilling
- ☒ Underground Utilities
- ☒ Equipment Refueling
- ☐ Lockout/Tagout
- ☒ Fire
- ☒ Cutting Acetate Sleeves
- ☐ Ladder Use
- ☒ Driving
- ☐ Boating Safety
- ☐ Personal Safety – Urban Setting

Actions to be taken to protect against the hazards identified are provided in the sections below.

3.4.1 Slip, Trips and Falls

Slipping hazards may exist due to uneven terrain, wet or slick surfaces, leaks or spills. Tripping hazards may be present from elevation changes, debris, poor housekeeping or tools and equipment. Some specific hazards may include: climbing/descending ladders, scaffolding, berms or curbing. Collectively, these types of injuries account for nearly 50 percent of all occupational injuries and accepted disabling claims. Prevention requires attention and alertness on the part of each worker, following and enforcing proper procedures, including good housekeeping practices, and wearing appropriate protective equipment.

3.4.2 Housekeeping

Personnel shall maintain a clean and orderly work environment. Make sure that all materials stored in tiers are stacked, racked, blocked, interlocked, or secured to prevent sliding, falling, collapse, or overturning. Keep aisles and passageways clear and in good repair to provide for free and safe

movement of employees and material-handling equipment. Do not allow materials to accumulate to a degree that it creates a safety or fire hazard.

During construction activities, scrap and form lumber with protruding nails and other items shall be kept clear from work areas, passageways, and stairs. Combustible scrap and debris shall be removed at regular intervals. Safe means must be provided to facilitate removal of debris.

Containers must be provided for collecting and separating waste, used rags and other debris. Containers used for garbage and other oily flammable or hazardous waste such as caustics, acids, harmless dusts, etc., must be separated and equipped with covers. Garbage and other waste shall be disposed of at frequent and regular intervals.

3.4.3 Heavy Equipment

Equipment, including earth-moving equipment, drill rigs, or other heavy machinery, will be operated in compliance with the manufacturer's instructions, specifications, and limitations, as well as any applicable regulations. The operator is responsible for inspecting the equipment prior to use each work shift to verify that it is functioning properly and safely.

The following precautions should be observed whenever heavy equipment is in use.

- PPE, including steel-toed boots, safety glasses, high visibility vests, and hard hats must be worn.
- Personnel must be aware of the location and operation of heavy equipment and take precautions to avoid getting in the way of its operation. Workers must never assume that the equipment operator sees them; eye contact and hand signals should be used to inform the operator of the worker's intent.
- Personnel should not walk directly in back of, or to the side of, heavy equipment without the operator's knowledge. Workers should avoid entering the swing radius of equipment and be aware of potential pinch points.
- Nonessential personnel will be kept out of the work area.

3.4.4 Materials and Equipment Handling - Lifting

The movement and handling of equipment and materials on the Site pose a risk to workers in the form of muscle strains and minor injuries. These injuries can be avoided by using safe handling practices, proper lifting techniques, and proper personal safety equipment such as steel-toed boots and sturdy work gloves. Where practical, mechanical devices will be utilized to assist in the movement of equipment and materials. Workers will not attempt to move heavy objects by themselves without using appropriate mechanical aids such as drum dollies or hydraulic lift gates.

Proper lifting techniques include the following.

- Lift with the strength of your knees, not your back.
- Firmly plant your feet approximately shoulder-width apart.
- Turn your whole body, don't bent or twist at the waist.
- Be sure that the path is clear of obstructions or tripping hazards; avoid carrying objects that will obstruct your vision.

- Use caution when holding an object from the bottom to prevent crushing of the hands or fingers when lowering.

3.4.5 Excavations

A competent person who is capable of identifying existing and predictable hazards in the surroundings, or working conditions that are unsanitary, hazardous, or dangerous to employees, and who has authorization to take prompt corrective measures to eliminate them, will be present during excavation activities.

The atmosphere will be tested in excavations, before employees are permitted to enter and begin work, greater than 4 feet in depth or where oxygen deficiency or toxic or flammable gases are likely to be present. The atmosphere shall be ventilated and re-tested until flammable gas concentrations less than 10 percent of the lower explosive limit (LEL) and site-specific action levels are obtained. Worker entry will not be allowed if

- flammable vapor or dust must be at a concentration less than 10 percent of the lower explosive limit (LEL); and
- oxygen must be at a concentration greater than 19.5 percent and less than 22 percent; and
- hydrogen sulfide concentration must be less than 5 parts per million (ppm); and
- toxic substances must be at a concentration less than their respective permissible exposure limits or specified action limits.

In addition, a safe means of access and egress (i.e., a ladder, stairs or ramp) must be provided so that no more than 25 feet of lateral travel is required by employees.

Workers will not enter unstable excavations or excavations greater than 5 feet in depth without appropriate protective systems such as benching, sloping, or shoring. If shoring or shielding systems are not used, side slopes will not be steeper than 1½:1 without written confirmation from the competent person that slope is safe for the soil conditions. Excavations will be constructed in accordance with the OSHA Excavation Safety Standard (29CFR1926 Subpart P).

The competent person will inspect excavations daily prior to entry, throughout the shift as needed, and/or if entry is expected after a rain storm. If there is evidence that a cave-in or slide is possible, work will cease until the necessary safeguards have been taken. Excavated material will be placed far enough from the edge of the excavation (a minimum of 2 feet) so that it does not fall back into the opening or affect the integrity of the sidewall. At the end of each day's activities, open excavations will be clearly marked and secured to prevent nearby workers or unauthorized personnel from entering them. Remote sampling techniques will be the preferred method of sample collection in excavations.

3.4.6 Drilling

During all drilling activities, the operator must ensure that the appropriate level of protection and appropriate safety procedures are utilized. The operator will verify that equipment "kill switches" are functioning properly at the start of each day's use. Hard hats, steel-toed boots, and ear and eye protection will be required at all times when working around drill rigs. The proximity of

underground and overhead utilities must be identified before any drilling is attempted. The rig may not be moved with the mast in the upright position.

Workers can effectively manage hazards associated with working around heavy equipment if a constant awareness of these hazards is maintained. These hazards include the risk of becoming physically entangled in rotating machinery, slipping and falling, impact injury to eyes, head and body, and injury from machinery operations. Never work or walk on piles of well casings. Make sure all high-pressure lines and hoses have whip checks attached. Constant visual or verbal contact with the equipment operator will facilitate such awareness.

3.4.7 Noise

Noise may result primarily from the operation of heavy equipment, process machinery or other mechanical equipment. Hearing protection with the appropriate noise reduction rating (NRR) shall be worn in areas with high noise levels. A good rule of thumb to determine if hearing protection is needed is the inability to have a conversation at arms length without raising voice levels. If loud noise is present or normal conversation becomes difficult, hearing protection in the form of ear plugs, or equivalent, will be required.

3.4.8 Underground Utilities

Reasonable efforts will be made to identify the location(s) of underground utilities (e.g., pipes, electrical conductors, fuel lines, and water and sewer lines) before intrusive soil work is performed. The state underground utility notification authority (e.g., USA, Dig Alert, Blue Stake, etc.) will be contacted prior to the start of intrusive field activities in accordance with local notification requirements. In areas not evaluated or serviced by the underground utility notification authority, and a reasonable potential for underground utilities exists, one or more of the following techniques will be employed to determine the location of subsurface structures.

- Contracting the services of a qualified private utility locator.
- Having a survey of the subject area conducted by staff trained in the use of subsurface utility locating equipment.
- Subsurface testing (i.e., hand digging or potholing) to the expected depth of probable utilities (not less than 5 feet).

If utilities cannot be located or if unlocated utilities are suspected to be present, subsurface activities (i.e., borings, excavation) should not be conducted before the location(s) or absence of underground utilities is confirmed.

Typical subsurface location marks are as follows:

- Red – electrical,
- Yellow – gas/oil/steam,
- Blue – water,
- Green – sanitary/storm drains/culverts,
- Orange – communications, and
- White – proposed excavation or boring.

Intrusive work should be limited to the area 3.3 feet (1 meter) on either side of the location marks. In some special cases such as fiber optics and high-pressure pipelines this area should be expanded to 16.5 feet (5 meters) on either side of the utility.

3.4.9 Overhead Utilities

If work is to be conducted in the vicinity of overhead electrical utilities, the owner of the overhead line will be contacted to determine the maximum voltage. Any overhead utility will be considered to be energized unless and until the person owning or operating such line verifies that the line is not energized, and the line is visibly grounded at the work site.

Workers will not perform work in proximity to energized high-voltage lines (including scaffolding, well drilling, pile driving, or hoisting equipment) until danger from accidental contact with high-voltage lines has been effectively guarded against.

Equipment with articulated upright booms or masts are not permitted to operate within 15 feet of an overhead utility line (less than 50kV) while the boom is in the upright position. For transmission lines in excess of 50kV, an additional distance of 4 inches for each 10 kV over 50kV will be used.

3.4.10 Equipment Refueling

Care shall be exercised while refueling generators, pumps, vehicles, and other equipment to prevent fire and spills. Personnel shall eliminate static electricity by grounding themselves (touching metal) prior to using refueling hoses and or containers of petroleum liquids. Items being refueled shall be grounded or be located on the ground and not on a trailer, work bench or inside a truck bed. Equipment that is hot must be allowed to cool prior to refueling. Spill response materials shall be available when conducting refueling operations.

3.4.11 Electrical Hazards

Electrical equipment to be used during field activities will be suitably grounded and insulated. Ground-fault circuit interrupters (GFCI), or equivalent, will be used with electrical equipment to reduce the potential for serious electrical shock. Electrical equipment including batteries, generators, panels and extension cords shall be kept dry during use. Extension cords may not be used as a permanent means of providing power and will be removed from service if they are worn, frayed, or if the grounding prong is missing.

Extension cord precautions include the following.

- Be aware of exposed or bare wires, especially on metal grating. Warning*: Electrical contact with metal can cause fatal electrocution.*
- Prior to use, inspect cords for exposed or bare wires, worn or frayed cords, and incorrect splices. Splices are permitted, but there must be insulation equal to the cable, including flexibility.
- Cables and extension cords in passageways, steps or any area where there may be foot traffic should be secured so as to not create a tripping hazard. Overhead cables and extension cords shall be rigged to a height greater than 6 feet.
- Shield extension cords that must run across driveways or areas where vehicle traffic is present.

- Do not run cords across doorways or windows where they can be frayed or cut by a closed door or window.
- Do not run wires through wet or puddled areas.
- Flexible cord sets that are used on construction sites or in damp locations shall be of hard usage or extra hard usage type.

Observation of energized machinery will take place from a safe distance. Only qualified personnel will remove guards, hatch covers, or other security devices if necessary. Equipment lockout procedures and an appropriate facility work permit requirements will be followed. Lockout/tagout procedures will be conducted before activities begin on or near energized or mechanical equipment that may pose a hazard to site personnel. Workers conducting the operation will positively isolate the piece of equipment, lock/tag the energy source, and verify effectiveness of the isolation. Only employees who perform the lockout/tagout procedure may remove their own tags/locks. Employees shall complete lockout/tagout training before initiating this procedure.

Only qualified personnel will remove covers of electrical equipment to expose energized electrical parts. Entering electrical rooms/vaults or areas with live exposed electrical part by BC employees shall be permitted only when accompanied by a qualified personnel after notification and approval of the appropriate facility personnel.

3.4.12 Lockout/Tagout

Lockout/tagout (LO/TO) procedures in accordance with 29 CFR 1910.147 will be performed before activities begin on or near energized or mechanical equipment that may pose a hazard to site personnel. The purpose of the lockout/tagout (LO/TO) system is to safeguard exposure from machinery, energized electrical circuits, piping under pressure, or any type of energy source from unexpected energization or start up that could at cause harm to an individual. Workers conducting the operation will positively isolate the piece of equipment, lock/tag the energy source, and verify effectiveness of the isolation. Only employees who perform the lockout/tagout procedure may remove their own tags/locks. Employees must be thoroughly trained before initiating this procedure.

Whenever multiple personnel (or multiple employers are working on the same worksite) are to be engaged in activities requiring LO/TO, employees/employers shall inform each other of their activities and coordinate their respective LO/TO procedures. Whenever a group lockout/tagout procedure must be performed, they shall utilize a procedure that affords the same level of protection as that provided by the implementation of a personal lockout or tagout device. Group LO/TO devices shall meet the requirements of 29 CFR 1910.145(f)(3).

<u>Basic Lockout/Tagout Procedures</u>

1. Each person will maintain their own lock, key, and lockout device so that no one else can remove the lock.
2. Always notify the operator when work is to be done.
3. Use your own lock to lock out electrical power. Attach a tag or sign to the power disconnect to indicate that maintenance work is in progress. Use the wording "Do Not Operate."

4. Bleed all pressure from pneumatic, hydraulic, or other fluid lines, or safely isolate them from the area where work is being done.
5. Drain contents of lines or tanks as needed. Lock valves open or closed to prevent buildup of pressure.
6. Ground electrical systems as needed.
7. Secure any device under tension or compression so as to prevent accidental movement. Move suspended parts that could drop or cycle to a safe position and block, clamp, or chain them in place.
8. Verify (test) that the mechanism had been isolated from the source of energy.
9. Ensure that all workers remove their individual locks after work is completed. The last worker should remove the locking devices.
10. Ensure that the last person double-checks that all is clear and safe before start-up.

Portable Equipment

Portable electrical equipment such as hand drills, computers, and power saws that use plug type connectors must be unplugged prior to any task that may expose the employee to energized portions of the equipment. Removal of the plug from the power source, such as the generator or wall socket, may be combined with a tagout system, particularly if the plug is at a distance from the equipment being repaired.

3.4.13 Confined Spaces

Entry into confined spaces will be conducted in strict accordance with 29 CFR 1910.146. Confined spaces will be evaluated prior to entry to determine if hazards are present that could pose a risk to entrants. Before workers may enter a permit-required confined space, a pre-entry checklist and entry permit must be completed by the PM or SSO, approved by the RSUM and, all requirements for entry must be met.

Confined spaces may be described as having, but not being limited to, the following characteristics:

- is large enough to permit an employee to enter and perform work; and
- has limited or restricted means of entry and exit; and
- is not equipped, designed, or intended for continuous human occupancy.

If there is any serious health and safety hazard present in the confined space is considered a permit-required confined space (permit space). A permit-space is a confined space that has one or more of the following characteristics:

- contains or has the potential to contain a hazardous atmosphere; or
- contains or has the potential to contain a material with the potential to engulf or entrap an employee; or
- is so configured that an employee may become trapped, disoriented, or asphyxiated by wall configurations or floors that taper to smaller cross sections; or
- contains any other established safety or health hazard (examples may include sources of energy, moving parts or thermal considerations).

All fluid, electrical, and steam lines and other sources of energy that could harm entrants must be completely isolated before entry. The following atmospheric conditions must be met before entry is permissible (air monitoring may be necessary to verify these conditions are met):

- flammable vapor or dust must be at a concentration less than 10 percent of the lower explosive limit (LEL); and
- oxygen must be at a concentration greater than 19.5 percent and less than 22 percent; and
- hydrogen sulfide concentration must be less than 5 parts per million (ppm); and
- toxic substances must be at a concentration less than their respective permissible exposure limits or specified action limits.

In addition, the following roles must be designated before entry into permit-required confined spaces is allowed: Entry Supervisor; Attendant; and Authorized Entrant(s). Confined space entry for each project also requires training for the project team on written operating procedures, including the use of the Confined Space Pre-Entry Checklist and Confined Space Entry Permit forms.

BC employees are ***not*** trained in rescue services. Such services are to be arranged locally, prior to entry operations, by the PM. Rescue services can typically be provided by the local fire department or contracted service provider.

3.4.14 Fire/Explosion

Site workers should have an increased awareness concerning fire and explosion hazards whenever working with or near flammable materials, especially when performing any activity that may generate sparks, flame, or other source of ignition. Intrinsically safe equipment is required when working in or near environments with the potential for an explosive or flammable atmosphere. The SSO will verify facility requirements for a "hot work" permit before activities that may serve as a source of ignition are conducted.

Flammable materials will be kept away from sources of ignition. In the event of fire, work will cease, the area will be evacuated, and the local fire response team will be notified immediately. Only trained, experienced fire fighters should attempt to extinguish substantial fires at the Site. Site personnel should not attempt to fight fires, unless properly trained and equipped to do so. A fully charged ABC dry chemical fire extinguisher will be readily available for use during all scheduled activities at the Site.

3.4.15 Sharp Objects/Cutting Utensils

Frequently field tasks require the cutting of items such as rope, packaging or containers. Care should be exercised in using knives and/or cutting implements while performing such cutting tasks. Personnel should cut down and away from their body and other personnel. The item being cut should be braced or secured from movement while cutting. When slicing open acetate liners, such as those utilized in direct push drilling, personnel should use a hook blade cutting implement designed for this task versus a straight blade knife.

3.4.16 Cutting Acetate Sample Sleeves

The cutting of acetate sleeves presents a potential hazard to sampling personnel. By following proper procedures, the risk associated with this activity can be effectively minimized. To remove the soil sample the acetate liner must be cut with a bladed tool or knife. Knives are more frequently the source of disabling injuries than any other hand tool. The principal hazard in the use of knives is the hand slipping from the handle onto the blade or the blade strikes another part of the body. To prevent this, the following safety procedures should be followed.

- Provide a safety blade holder with a retraction spring on a track where blade mounts. Use a hook type linoleum blade which has a reduced cutting edge. When the hook of the blade is cutting the acetate liner it keeps the blade extended. If the blade breaks or the operator's hand slips the blade automatically retractions into the handle of the safety blade holder.
- Replace blades when they become dull. If material becomes hard to cut the blade is dull.
- Wear leather cut-resistant (such as Kevlar) gloves.
- Wear safety glasses.
- The cutting stroke should be away from the body. If that is not possible, then the hands and body should be in the clear.
- Provide an angle iron device to place the liner in when cutting. This gives a holder for the liner.
- If you drop the knife just let it fall to the ground and DO NOT try to catch it.
- If you lay the knife down make sure the blade is retracted into the holder or the knife is placed in a protective holder.

3.4.17 Elevated Platforms

When working at heights that expose employees to falls greater than 6 feet, especially on sloping roofs and elevated platforms, the requirements of 29 CFR 1926.502 shall be observed. In such instances, a safety harness shall be worn and the lanyard secured at a level not lower than the employee's waist, limiting the free-fall distance to a maximum of 6 feet.

Elevated work platforms shall be constructed, used, and maintained in accordance with Subpart L of the OSHA Construction Safety Orders. Scaffolds and hoisting lines shall be inspected daily by a competent person to verify the integrity of the components. If a material is determined to be defective, it may not be used for any purpose and will be replaced immediately.

A standard railing shall consist of top rail, intermediate rail, toe board, and post. It shall have a vertical height of approximately 42 inches (±3 inches) from the top surface of the top rail to the floor, platform, runway, or ramp. The top rail shall have a smooth surface throughout. The intermediate rail shall be set half way between the top rail and the floor, platform, runway, or ramp.

A cover of standard strength and construction that is secured against accidental displacement shall guard floor holes, hatchways, or any other openings into which a person can walk. When the cover is not in place, the openings shall be guarded with a standard railing (equipped with a toe board) on all exposed sides. Any cover on floor openings shall be properly labeled or stenciled with letters at least one inch high or greater stating "OPENING – DO NOT REMOVE".

Personal Fall Protection Equipment

Full body harness is the only acceptable means of fall arrest for personnel working over surfaces greater than six feet in height. A Fall Arrest System consisting of safety harness and anchor lanyard must be worn by anyone working on elevated surfaces that lack "general" fall protection such as railings, etc.

Lanyards must be tied off at a point above the worker's head and to a firm structure or a portion thereof designed to hold a weight of 5,000 lbs. Only hooks with locking snaps that operate in "as new" condition will be used. These hooks are also referred to as "double action lanyard hooks".

When other possible means of fall protection (railings, etc.) are not available, individuals working at heights of less than 6 feet must tie-off if there is danger of impalement, especially if the impalement hazard cannot be mitigated in accordance with OSHA standards.

All workers must perform routine inspection of belts/harnesses and lanyards prior to their use. The employer shall conduct regular inspections (every three months) of all fall protection equipment. In addition, there shall be an inspection of all workers' personal tools and equipment prior to the employees using them on the job.

Lanyards are to be used for tie-off purposes only, and damaged belts, harnesses, and lanyards must be retired and discarded.

3.4.18 Ladder Use

Ladders are to be maintained in good condition at all times, with tight joints, hardware, and fittings securely attached, and moveable parts freely operating without binding or undo play. Defective ladders must be "tagged" out of service. Safety "feet" shall be kept in good condition. Ladders are to be visually inspected for possible signs of damage or defects daily, before each use.

Where possible, portable straight rung ladders shall be set up so that the horizontal distance from the top support to the foot of the ladder is ¼ of the working length of the ladder. The ladder shall be secured by tying it off to a firm point, or held in place by another worker while in use. If the ladder is used to gain access to a roof or platform, the side rails shall extend at least 3 feet beyond the point of support at the edge of the roof or platform.

Step ladders shall always be set up properly, so that they are in the "A" frame position, level and with all four feet on firm ground, and fully opened with the spreaders locked in place. Personnel are forbidden to stand on the top cap or on the last step of a step ladder, or to stand on the hinged back of a step ladder. A step ladder shall never be used at a straight ladder.

3.4.19 Traffic

Vehicular traffic presents opportunities for serious injury to persons or property. Traffic may consist of street traffic or motor vehicles operated by facility employees or visitors to the Site. Workers and other pedestrians are clearly at risk during periods of heavy traffic. Risk from motor vehicle operations may be minimized by good operating practices and alertness, and care on the part of workers and pedestrians.

Site personnel will wear high-visibility traffic safety vests whenever activities are conducted in areas of heavy traffic. Work vehicles will be arranged to be used as a barrier between site workers and nearby traffic. If required by local ordinances or site location, a traffic control plan will be developed implemented.

It is important to be conscious of all vehicular traffic that may be present during conduct of field operations. Use caution tape, barricades, or safety cones to denote the boundaries of the work area and to alert vehicle operators to the presence of operations which are non-routine to them. Be careful when exiting the work area and especially when walking out from between parked vehicles to avoid vehicular traffic.

Never turn your Back on Traffic. When working in or near a roadway, walk and work with your face to the oncoming traffic. If you must turn your back to traffic, have a coworker watch oncoming traffic for you.

Vehicle and Worksite Position. Whenever possible, place a vehicle between your worksite and oncoming traffic. Not only is the vehicle a large, visible warning sign, but if an oncoming car should fail to yield or deviate, the parked vehicle, rather than your body, would absorb the first impact of a crash. Turn the wheels so that if the vehicle were struck, it would swing away from the worksite. Even though the vehicle would protect you in a crash, it might be knocked several feet backward. Always leave some room between the rear of the vehicle and the work area.

Use of Signs and Cones to Direct Traffic. Traffic signs and cones are used to inform drivers and direct traffic away from and around you. Cones and signs are only effective if they give oncoming drivers enough time to react and make it clear how traffic should react.

Cone Positioning. The most common coning situation is setting a taper of cones that creates a visual barrier for oncoming motorists and gradually closes a lane.

The position of the taper depends on the road width, position and size of the work area, and also on the characteristics of the traffic.

3.4.20 Driving

A lot of driving is required to get to, from, and between project Sites. Safe vehicle maintenance and operation must be a priority. It requires knowledge of directions to (and conditions of) the Site in advance, careful exiting and merging into traffic, anticipating the unexpected, remaining alert to one's physical and mental condition, resisting distractions such as cell phone use, other car activities and contacting assistance when needed. Report all vehicle accidents/incidents to BC's Risk Manager.

3.4.21 Arc Flash Protection

An arc flash is a short circuit through the air when insulation or isolation between electrified conductors is breached or can no longer withstand the applied voltage, an arc flash occurs. Statistics show that there are 5 to 10 arc flash explosions a day near electrical equipment that result in hospitalization of a burn victim. An arc flash can be caused by common occurrences such as dropping tools, accidental contact with electrical systems, and build up of dirt or corrosion.

The temperature of an arc can reach more than 35,000 F as it creates a brilliant flash of light and a loud noise. Concentrated energy explodes outward from the electrical equipment, spreading hot gases, melting metal, causing death or severe burns, and creating pressure waves that can damage hearing or brain function and a flash that can damage eyesight. The fast-moving pressure wave also can send loose material such as pieces of equipment, metal tools, and other objects flying, injuring anyone standing nearby.

Regulations require the calculation of the "flash protection boundary" inside which qualified workers must be protected when working. This boundary is an imaginary sphere surrounding the potential arc point, "within which a person could receive a second-degree burn if an electrical arc flash were to occur," according to the National Fire Protection Association (NFPA) 70E standard. Brown and Caldwell's Health and Safety Manual gives direction of when and where to establish this boundary.

BC's Electrical Safety/Arc Flash Policy provides information and instruction for BC employees who work on or near energized power circuits, electrical distribution equipment, electrical utilization equipment and those who inspect energized equipment, where a phase-to-ground or phase-to-phase short or fault occurrence may cause an Arc Flash event.

BC employees shall comply with BC Health and Safety Requirements Manual # 207 – Lockout/Tagout and treat electrical equipment and circuits as energized until:

1. Lock-Out / Tag-Out protection is in place and the equipment or circuit has been tested to verify "no voltage" present, by a trained and qualified electrical worker, or
2. The equipment or circuit has been physically isolated from every power source, tested, and clearly labeled.

For those BC employees involved with **energized electrical work** (i.e. design verification, equipment check-out, or start-up adjustments), the following ordered approach shall be used:

1. BC employees shall seek to have a trained and qualified electrical worker perform all energized electrical hands-on work (i.e. switching, metering, testing, etc.) while BC employees remain outside the flash protection boundary.
2. BC employees that closely supervise work within the flash protection boundary shall first receive approval from the Project Manager and Site Safety Officer (SSO).
3. Prior to performing this work, the Project Manager (PM) shall ensure that a Field Work Safety Plan (FWSP) is prepared and approved by the PM, the employee's manager, the SSO, and cognizant Health and Safety Manager.
4. Only "qualified BC employees" shall enter the flash protection boundary wearing the proper Personal Protective Equipment (PPE) and only for Hazard/Risk Categories 0-2 – see the 'Warning' section below. BC personnel shall acquire the proper PPE from the SSO and/or RSUM.

WARNING

Qualified BC personnel are limited to work in Hazard/Risk Categories 0-2, and therefore only require PPE meeting the requirements of Hazard/Risk Categories 0-2.

Only qualified electricians shall conduct work categorized as a Hazard/Risk Category of 3 or 4.

Qualified BC personnel are NOT to cross a flash protection boundary which involves a Hazard/Risk Category 3 or 4 situation.

BC employees and management shall review the **Health and Safety Manual #513 – Arc Flash** for detailed requirements.

Questions concerning this policy should be directed to the BC Office Electrical Engineering Manager and to the RSUM.

Definitions

Energized Electrical Work. Work performed on or near energized electrical systems or equipment with exposed components operating at 50volts or greater. Electrical system testing, thought to be de-energized, but not yet proven to be (for example, a LO/TO effectiveness check).

Flash Protection Boundary. The distance from energized exposed electrical equipment at which an unprotected person will receive a curable burn: 2nd degree burn or blistering. Work performed inside this boundary requires that the person be a "qualified person" and the use of Personal Protective Equipment (PPE) to protect against arc flash burns.

Newly installed/serviced electrical equipment may contain an Arc Flash Label that will identify the energy, hazard category and PPE requirements associated with the equipment. For all other unlabeled equipment, where the specific flash protection boundary (energy, hazard category, and applicable PPE) is not established or cannot be established first (prior to live electrical exposure), BC personnel shall maintain a 4-foot minimum observation distance (BC prefers 10 feet) from the exposed (i.e. doors open, covers off) live electrical equipment. In the event that the 4-foot minimum distance must be crossed, BC personnel shall don PPE appropriate for Hazard/Risk Category 2.

Qualified BC Employee. A person with the training and experience having knowledge of energized electrical equipment hazards from an operational standpoint and from the safety training standpoint.

Educational credentials alone do not make a person qualified. Determination of qualification shall be established by the employee's supervisor or other designated knowledgeable management representative.

3.4.22 Boating Safety

Boating or similar activities on aerated water treatment ponds and/or tanks by BC personnel is not permitted. The aeration process affects the buoyancy of the liquid and therefore boats can not consistently stay afloat.

Performing work activities from a boat can present unique hazards to employees. The following guidelines can help mitigate the risk. The boat can become unstable if the weight in it is excessive or loaded improperly. Too much weight will reduce maneuverability and freeboard (the height of the boat sides above the water) and can increase the risk of sinking.

When boarding the boat, the operator must be sure that the boat is secure. With one hand on the boat, each employee should quickly lower themselves straight down into the center of the boat. A United States Coast Guard (USCG) certified personal floatation device will be worn by each BC

employee in the boat. In addition, other USCG-required items (i.e., throwable cushion, retrieval line, etc.) will be present on the boat. To move around in a boat, one should step along the fore-and-aft centerline of the boat while the boat is held in place along the pier.

Do not board the boat while carrying equipment, rather first board the craft and then have someone hand in the equipment or place the equipment in the boat prior to launch The amount and location of weight is critical and can reduce the risk of capsizing. Weight should be kept towards the middle or centerline of the boat, both fore-and-aft and side-to-side, also the weight should be kept low to the bottom of the boat to reduce the center of gravity.

It is not anticipated that waves of substantial size will be encountered, however, if a wave approaches the boat, steer the bow towards the oncoming wave. Overloading the boat increases draw and the potential for swamping. Watercraft must be operated within the boat manufacturers weight limits.

Should the boat capsize, Brown and Caldwell personnel shall abandon the boat and return to shore as quickly as possible. It is important that the employees attempt to remove themselves from the water as soon as possible, and get inside and call for help. Hypothermia (cold stress) is a significant risk for anyone involved in a boating accident due to the rapid conduction of body heat by cold water. Wet or dry suits are recommended for cold weather/cold water (less than 45° F) operations.

3.4.23 Building Collapse

Buildings collapse for a variety of reasons. Natural phenomena such as earthquakes, hurricanes, floods, mudslides, avalanches, and storms are the usual cause for building collapses. Vacant buildings may be at risk for collapse since maintenance-related activities have been often neglected thus resulting in structural damage.

Project personnel should attempt to answer the following questions whenever working near suspect building structures.

- Are there any vacant buildings present on site?
- Will it be necessary to enter or work next to the vacant building(s)?
- Are there any apparent hazards including external damage, falling objects, sticky doors, structural instability, or possible asbestos and/or lead paint?
    - External damage may include, but not necessarily be limited to, foundation cracks, damaged or missing porch roofs and overhangs supports, gaps between steps and the structure, missing supports or portions of walls, and "washed away" ground.
    - Falling objects may include, but not necessarily be limited to, building cornices, gutters, bricks, and roofs/roofing materials.
- Be aware that when entering a building, if the door sticks at the top it could mean the ceiling is ready to fall. If you force the door open, stand outside the doorway clear of falling debris.
- Has the building(s) been inspected by a qualified professional and deemed safe for entry?
- Are there any viable alternatives for conducting work that preclude the need to enter or work next to the suspect building(s)?

If you have any concerns about entering the building after answering the above questions, speak with the PM immediately. The client will need to be informed that a proper building inspection or engineering controls may be needed before work can be performed.

If you don't feel safe entering a building, then notify the PM and RSUM and stay outside the building at an appropriate distance to avoid falling debris.

3.4.24 Personal Safety - Urban Setting

Working in a distressed neighborhood may present hazards associated with street violence or other crime. In these situations, mental preparation before going to the Site and awareness while on Site are of key importance. If in doubt, always ask Site or client personnel about the safety of a neighborhood. Forethought should be given to arranging to work during daylight hours if possible. Take advantage of any Site security measures (monitoring cameras, security guards) and investigate such measures prior to the field work. Once in the field, work in parties of two or more and stay within view of the general public. Keep a charged cell phone nearby or on your person at all times. Become familiar with your location so you can effectively communicate it over the phone.

In addition to these basic principals, the following is a list of common personal safety rules that apply not only to work at the Site, but to general safety practices while in the field and also between work shifts.

- If at all possible, work/travel in groups. Do not venture out alone.
- Be alert. Notice who passes you and who's behind you. Maintain distance between yourself and strangers. Know where you are, and note potential exit paths.
- If work has paused do not appear slack or distracted. Do not sit in a vehicle with the doors unlocked.
- Walk in well-lighted areas. Don't walk close to bushes, alleys, and so on. In dark or deserted neighborhoods, walk down the middle of the street (be alert to vehicle traffic).
- If a car pulls up slowly, or the occupants of the vehicle bother you, cross the street and walk or run in the other direction. If you are pursued, dial 911.
- If you feel someone is following you, turn around and check. Proceed to the nearest lighted house or place of business.
- Don't overburden yourself with bags or packages, which might impede running or taking care of yourself.
- Be aware of loose clothing, packs/purses and hair. These give an assailant an easier method of grabbing and controlling you. Wear unrestrictive clothing for ease of movement (but not overly loose).
- Carry a non-weapon personal safety device (such as a whistle, panic button, or key light) - anything that could visually or audibly draw attention to your location.
- What you carry in your hand(s) is important. Valuables make you a potential target. Items such as a hand auger or tool may help you be perceived as a less-than-inviting victim.
- Carry as little cash as possible.

- Hold your purse tightly, close to your body. Keep your wallet in a front or in a buttoned, hip pocket. When at a fixed location, lock your valuable items away and out of site (i.e., in a trunk).
- Be careful when people stop you for directions or information. Always reply from a distance; never get too close to a stranger' car.
- If you feel that you are in danger, don't be afraid to scream and run.
    - Toss wallet/keys away from direction of escape.
    - Don't attach car keys to house keys.
    - Leave large valuables (purse, laptop) locked and hidden in the vehicle.

3.5 Natural Phenomena

Natural phenomena such as weather-related emergencies and acts of nature can affect employees' safety. Natural phenomena can occur with little or no warning. If an emergency situation arises as a result of natural phenomena, adhere to the contingency procedures outlined in Section 10. The following natural phenomena have been identified and may be encountered during scheduled field activities.

- ☒ Sunburn
- ☒ Cold Stress
- ☐ Hurricanes
- ☒ Earthquakes
- ☒ Heat Stress
- ☒ Lightning/Electrical Storms
- ☒ Tornados and Strong/Straight Line Winds

3.5.1 Sunburn

Working outdoors with the skin unprotected for extended periods of time can cause sunburn to the skin. Excessive exposure to sunlight is associated with the development of skin cancer. Field staff should take precautions to prevent sunburn by using sunscreen lotion and/or wearing hats and long-sleeved garments.

3.5.2 Heat Stress

Adverse climate conditions, primarily heat, are important considerations in planning and conducting site operations. Heat-related illnesses range from heat fatigue to heat stroke, with heat stroke being the most serious condition. The effects of ambient temperature can cause physical discomfort, loss of efficiency, and personal injury, and can increase the probability of accidents. In particular, protective clothing that decreases the body's ventilation can be an important factor leading to heat-related illnesses.

To reduce the possibility of heat-related illness, workers should drink plenty of fluids and establish a work schedule that will provide sufficient rest periods for cooling down. Personnel shall maintain an adequate supply of non-caffeinated drinking fluids on site for personal hydration. Workers should be aware of signs and symptoms of heat-related illnesses, as well as first aid for these conditions. These are summarized in the table below.

Condition	Signs	Symptoms	Response
Heat Rash or Prickly Heat	Red rash on skin.	Intense itching and inflammation.	Increase fluid intake and observe affected worker.
Heat Cramps	Heavy sweating, lack of muscle coordination.	Muscle spasms, and pain in hands, feet, or abdomen.	Increase fluid uptake and rest periods. Closely observe affected worker for more serious symptoms.
Heat Exhaustion	Heavy sweating; pale, cool, moist skin; lack of coordination; fainting.	Weakness, headache, dizziness, nausea.	Remove worker to a cool, shady area. Administer fluids and allow worker to rest until fully recovered. Increase rest periods and closely observe worker for additional signs of heat exhaustion. If symptoms of heat exhaustion recur, treat as above and release worker from the day's activities after he/she has fully recovered.
Heat Stroke	Red, hot, dry skin; disorientation; unconsciousness	Lack of or reduced perspiration; nausea; dizziness and confusion; strong, rapid pulse.	Immediately contact emergency medical services by dialing emergency medical services. Remove the victim to a cool, shady location and observe for signs of shock. Attempt to comfort and cool the victim by administering small amounts of cool water (if conscious), loosening clothing, and placing cool compresses at locations where major arteries occur close to the body's surface (neck, underarms, and groin areas). Carefully follow instructions given by emergency medical services until help arrives.

3.5.3 Cold Stress

Workers performing activities during winter and spring months may encounter extremely cold temperatures, as well as conditions of snow and ice, making activities in the field difficult. Adequate cold weather gear, especially head and foot wear, is required under these conditions. Workers should be aware of signs and symptoms of hypothermia and frostbite, as well as first aid for these conditions. These are summarized in the table below.

Condition	Signs	Symptoms	Response
Hypothermia	Confusion, slurred speech, slow movement.	Sleepiness, confusion, warm feeling.	Remove subject to a non-exposed, warm area, such as truck cab; give warm fluids; warm body core; remove outer and wet clothing and wrap torso in blankets with hot water bottle or other heat source. Get medical attention immediately.
Frostbite	Reddish area on skin, frozen skin.	Numbness or lack of feeling on exposed skin.	Place affected extremity in warm, not hot, water, or wrap in warm towels. Get medical attention.
Trench Foot	Swelling and/or blisters of the feet	Tingling/itching sensation; burning; pain in the feet	Remove wet/constrictive clothing and shoes. Gently dry and warm feet with slight elevation. Seek medical attention.

3.5.4 Lightning/Electrical Storms

Lightning can be unpredictable and may strike many miles in front of, or behind, a thunderstorm. Workers will therefore cease field operations at the **first** sign of a thunderstorm and suspend activities until at least 30 minutes after the last observed occurrence of lightning or thunder. For purposes of this HASP, signs of a thunderstorm will include any visible lightning or audible thunder.

In the event of a thunderstorm, field personnel will take the following actions.

- Get inside a permanent building structure (not a shed or canopy) or fully enclosed metal vehicle (not a convertible or camper shell) with the windows fully up.
- If in a house or building, do not use the telephone or any electrical appliance that's connected to the building's electrical wiring.
- Stay away from tall isolated objects, such as trees, drill rigs, telephone poles, or flag poles.
- Avoid large open areas, such as fields or parking lots, where a person is the relatively highest object.
- Stay away from lakes, ponds, railroad tracks, fences, and other objects that could transmit current from a distant lightning strike.
- If caught out in the open without time to escape or find shelter, seek a low area (if time permits), crouch down, and bend forward holding the ankles. Tuck the head so that it's not the highest part of the body, without letting it touch the ground. Under no circumstances lay down.

If a person struck by lightning contact emergency medical services, even if he/she appears only stunned or otherwise unhurt as medical attention may still be needed. Check for burns, especially at fingers and toes, and areas next to buckles and jewelry.

3.5.5 Hurricanes

The key to responding to hurricane conditions is being informed. Before taking to the roads to leave for or from a jobsite during suspect hurricane conditions, listen to the radio for current and forecast conditions. Know what the weather reports mean by "watch" and "warning." A hurricane watch means hurricane conditions are possible in the specified area of the watch, usually within 36 hours. A hurricane warning indicates hurricane conditions are expected in the specified area of the warning, usually within 24 hours.

If watch or warning conditions exist, employees will communicate with the project manager to determine the appropriate course of action. Travel to or from work is not recommended if the employee will travel in the vicinity of a hurricane warning area. Restrictions on travel during hurricane watches are largely dependent on the actual weather conditions at the time. Employees are discouraged from driving during weather conditions where visibility and vehicle control are severely limited.

For long term projects with temporary or permanent office area, keep an emergency preparedness kit consisting of, but not limited to:

- Current project/office contacts list - how to reach folks in an emergency ,
- Blankets,
- Flashlights,
- Radio (operated by batteries),
- Batteries for flashlight and radio (note: batteries should be replaced annually to assure freshness) ,
- Water (unless there is a water bubbler that can be used with no electricity), and

- Snack crackers, dried fruit, etc. - a source of food that won't go bad.

3.5.6 Tornados and Strong/Straight Line Winds

Tornados and strong or straight line winds are potentially dangerous weather conditions because both have the ability to generate on very short notice (in some cases under one hour from clear weather conditions). Tornados and strong or straight line winds both have the same warning properties and recommendations. If a tornado "watch" is issued for your area, it means that a tornado is "possible". If a tornado "warning" is issued, it means that a tornado has actually been spotted, or is strongly indicated on radar, and it is time to go to a safe shelter immediately.

Be alert to what is happening outside, but do not place yourself in jeopardy by standing next to windows. Some common observations during a tornado include: a sickly greenish or greenish-black color to the sky; if there is a watch or warning announced or posted; an abrupt fall of hail (however, hail can occur in the absence of a tornado); a strange quiet that occurs within or shortly after a thunderstorm; clouds moving by very fast, especially in a rotating pattern or converging toward one area of the sky; a sound like a waterfall or rushing air at first, but turning into a roar as it comes closer (the sound of a tornado has been likened to that of both railroad trains and jets); debris dropping from the sky; an obvious "funnel-shaped" cloud that is rotating; or debris such as branches or leaves being pulled upwards, even if no funnel cloud is visible.

During a tornado warning or tornado occurrence, each employee is instructed to do the following:

- Proceed to interior rooms and halls on the lowest floor ***(do not use an elevator to exit an upper floor)***. Avoid halls that open to the outside in any direction. If there are no interior hallways, avoid those that open to the southwest, south, or west, since that is usually the direction from which the tornado will come.
- Stay away from glass, both windows and doors. Crouch down, and make as small a "target" as possible. If you have something with which to cover your head, do so, otherwise, use your hands.
- Exercise extreme caution when leaving your area of shelter. Be aware of potential hazards (i.e., natural gas smell, smoke, fire). In the event these hazards are encountered in your area of shelter, immediately evacuate the shelter. If the building/shelter has been damaged by a tornado, do not flush the toilets, as the sewer lines may have been damaged.
- If you are traveling in an automobile and can see a tornado, do not stay in your car and try to outrun a tornado. If possible, stop the car and enter the nearest business and seek shelter.
- If you are outside and it is not possible to get inside, seek a low lying ditch, culvert, etc. and keep your body as low to the ground and as braced as possible.

3.5.7 Earthquakes

Earthquakes strike suddenly, violently, and without warning. If your project is located near a fault line, earthquakes are an unpredictable possibility. For long term projects with temporary or permanent office area, keep an emergency preparedness kit consisting of, but not limited to:

- Current project/office contacts list - how to reach folks in an emergency,
- Blankets,

- Flashlights,
- Radio (operated by batteries),
- Batteries for flashlight and radio (note: batteries should be replaced as needed to assure freshness),
- Water (unless there is a water bubbler that can be used with no electricity), and
- Snack crackers, dried fruit, etc. - a source of food that won't go bad.

This kit is meant to serve as overnight survival in the event that it becomes unsafe to leave the project site. The kit's contents should be suited to meet the size and needs of your project.

If you feel the earth shaking, consider the following tips:

- Drop down; take cover under a desk or table and hold on.
- Stay indoors until the shaking stops and you are sure it is safe to exit.
- Stay away from bookcases, shelves, or anything that could fall on you.
- Stay away from windows.
- If inside a building, expect fire alarms and sprinklers to go off during the quake.
- If you are outdoors, find a clear spot away from buildings, trees, and power lines. Drop to the ground and cover your head.

If you are in a car, slow down and drive to a clear place, preferably away from power lines. Stay in the car until the shaking stops.

3.6 Biological Hazards

The following biological hazards have been identified and may be encountered during scheduled field activities.

- ☒ Bloodborne Pathogens/Sanitary Waste
- ☒ Rodents and Mammals
- ☒ Reptiles/Snakes
- ☒ Venomous Insects
- ☒ Mosquitoes
- ☐ Fire Ants
- ☒ Spiders/Scorpions
- ☒ Ticks
- ☒ Poisonous Plants

If any biological hazards are identified at the Site, workers in the area will immediately notify the SSO and nearby personnel.

3.6.1 Bloodborne Pathogens/Sanitary Waste

Potential exposure to bloodborne pathogens may occur during some work activities (e.g., sewer video surveys or source sampling), rendering first aid or CPR. Direct contact is an important route of

exposure for bloodborne pathogens due to puncture injuries, contact with abraded skin, or contact with areas such as the eyes, without appropriate protection. While very few organisms can enter the body through normal intact skin, direct contact with sewage, blood and body fluids is to be avoided. Site personnel should thoroughly wash their hands and face before eating, drinking or smoking and before leaving the work site.

Exposure controls and Universal Precautions are required at suspect locations, in order to prevent contact with blood or other potentially infectious materials as specified in Brown and Caldwell's *Bloodborne Pathogens Program*. All blood or other potentially infectious material will be considered infectious regardless of the perceived status of the source individual. A Hepatitis B vaccination will be offered to BC personnel before the person participates in a task where direct exposure to potentially infectious materials is a possibility (i.e., first aid or CPR). For personnel who have potential exposure to sanitary wastes, a current tetanus/diphtheria inoculation or booster is recommended.

3.6.2 Rodents/Mammals

Animals may potentially carry the rabies virus or disease causing agents. Do not attempt to feed or touch animals. Feces from some small mammals may contain diseases such as Hanta Virus. Avoid generating dust in the vicinity of rodent feces. In addition, animals such as dogs or wild predators (i.e., cougars or coyotes) may pose an attack hazard. Persons should slowly back away in a non-threatening manner if an encounter with a threatening animal occurs. In order to avoid such encounters, use the buddy system and make noise when working in areas where such animals may be present.

3.6.3 Reptiles/Snakes

The primary reptiles of concern are venomous snakes (rattlesnake, water moccasin, and copperhead). Avoid contact and areas that may harbor snake populations including high grass, shrubs, and crevices. In the event of a bite, immobilize the affected area and contact emergency medical services. If more than 30 minutes from emergency care, apply bandage wrap two to four inches above the bite (**note**: bandage should be loose enough to slip your finger underneath).

Wear shoes and heavy pants when walking and hiking in areas where snakes are likely found. Do not reach into rocky cracks, under logs, or large rocks. Even if a snake looks dead, do not touch it. A snake can still bite up to one hour after its death. Do not get near or tease a snake. Snakes are shy creatures and generally will not attack unless bothered.

Diamond Back Rattle Snake

Diamond backs are large snakes. They have a row of dark diamonds down the back and a rattle on their tail. These snakes have cat-like eyes and a pit between their nostril and eye. Eastern diamond backs like pine flat woods and scrub areas where palmetto thickets and gopher tortoise burrows are found. These snakes travel during the day and hide at night.

Timber Rattle Snake

Timber rattle snakes have a reddish-brown stripe running down the center of their back and black crossbands. Their tails are solid black with a rattle. These snakes have cat-like eyes and a pit between

their nostril and eye. Timber rattlers live in damp river beds, pine flat woods, swamps, and cane thickets.

Pygmy Rattle Snake

These small snakes are light to dark grey in color. They have a tiny rattle. Pygmy rattle snakes have cat-like eyes and a pit between their nostril and eye. These snakes are found in lowland pine flat woods, prairies, around lakes, ponds, and swamps. Pygmy rattlers are aggressive and will strike anything within striking range.

Cottonmouth (Water Moccasin)

Young cottonmouths are often mistaken for copperheads because of their reddish-brown crossbands. As these snakes age, their cross bands darken until they become almost solid black. Cottonmouths live near water sources like lakes, streams, rivers, ponds, and swamps. When threatened, cottonmouths may coil and open their mouths as though ready to bite. The white inside of the mouth is what gives this snake its name, "cottonmouth".

Copperhead

Copperheads have dark coppery red-brown hourglass crossbands on a lighter brown color. The top of the head is covered with large plate-like scales. Copperheads have cat-like eyes and a pit between their nostril and eye. These snakes live in rocky, wooded areas and low, wet swampy areas. Copperheads are sluggish and rarely bite, unless stepped on or touched.

Coral Snake

The body of this snake is ringed with black, yellow and red bands. (Remember: Red on yellow can kill a fellow. Red on black, venom lack.) The head of a coral snake is black, while the tail is black and yellow.

3.6.4 Venomous Insects

Common examples include bees, fire ants and wasps. Avoid contact with insects and their hives. If stung, remove the stinger by gently scraping it out of the skin (do not use tweezers). If the worker is stung by an insect, immediately apply an ice pack to the affected area and wash area with soap and water and apply antiseptic. If an allergic reaction occurs, contact emergency medical services for appropriate treatment. Seek medical attention immediately if you are allergic to venomous stings such as bees or if anaphylaxis symptoms are present.

3.6.5 Mosquitoes

Mosquitoes may transmit diseases such as West Nile Virus. Symptoms of West Nile Virus include: fever, headache, tiredness, body aches, and occasional rash. Avoid mosquito bites by wearing long sleeved shirt and long pants. Apply insect repellent to clothes and/or skin (if FDA approved for topical use). Report any dead birds in the area to local health officials. Mosquitoes are most active from dusk to dawn.

3.6.6 Fire Ants

Red and Black Fire Ants are capable of inflecting numerous stings (7 to 9) per ant in a matter of seconds, and large numbers of fire ants will typically attack at the same time. Fire ants are very aggressive and will sting simply upon coming in contact with skin. Individuals who are allergic to bees should carry bee sting kits when there is the potential to come in contact with fire ants. Fire ants are predominantly located in the southern United States.

The best way to avoid fire ants is to avoid disturbing their mounds. Fire ant mounds are typically constructed in disturbed habitats such as open fields, along roadsides, lawns, and many other open sunny areas. The mounds are constructed of dirt and/or other organic materials. Mounds are typically 10" to 24" in diameter and approximately 18" in height. If you disturb a mound, get away from the mound immediately.

Fire ant stings typically leave tiny red blisters and sometimes white pustules. Symptoms of stings include blistering, burning, swelling, pain, and irritation of the affected area. Recommended treatment consists of antihistamines along with topical antibiotic cream. Anaphylaxis symptoms such as shortness of breath, discomfort, lowered heart rate, etc. may also accompany fire ant stings. Seek medical attention immediately if you are allergic to venomous stings such as bees or if anaphylaxis symptoms are present.

3.6.7 Spiders/Scorpions

The black widow and brown recluse spiders are the most venomous. Avoid contact with spiders and scorpions and areas where they may hide. They favor dark hiding places. Inspect clothing and shoes before getting dressed. Wear gloves and safety shoes when working with lumbar, rocks, inspecting buildings, etc. Signs and symptoms of bites include: headache, cramping pain/muscle rigidity, rash and/or itching, nausea, dizziness, vomiting, weakness or paralysis, and convulsions or shock. Wash bite area with soap and water and apply antibiotic cream. Contact emergency medical services if allergic reaction or severe symptoms occur.

3.6.8 Ticks

Deer ticks may carry and transmit Lyme disease to humans. Signs of Lyme disease include a reddish "bulls-eye" around the affected area approximately a week after the bite. Symptoms include headache, fever, and muscle/joint pain. Persons suspecting infection should contact a health professional. Whenever possible avoid areas likely to be infested with ticks during the spring and summer months.

Wear light-colored clothing so ticks can be easily spotted and removed. Wear long sleeves and pants and tuck pant legs into boots or socks. Apply insect repellents to clothing and skin (if FDA approved for topical application). Persons with long hair should tie their hair back to minimize the potential for ticks to nestle in the scalp.

Personnel should self perform tick checks once daily field work is completed. If a tick is embedded in the skin, use tweezers to grasp the tick's head (near the skin) and pull straight out. Consider saving the removed tick for laboratory analysis.

3.6.9 Poisonous Plants

Common examples include poison ivy, poison oak and poison sumac. Avoid contact. Long-sleeved shirts and pants will allow some protection against inadvertent contact. If contact occurs, immediately wash the affected area thoroughly with soap and water. If an allergic reaction occurs, seek the care of a medical professional.

Poison Ivy is a trailing or climbing woody vine or a shrub-like plant with leaves that are each divided into three broad, pointed leaflets. The leaflets are commonly dark glossy green on top and slightly hairy underneath. They produce small yellowish or greenish flowers followed by berry-like drupes.

Poison Oak is a member of the same family as poison ivy and has a very similar appearance. Poison oak has leaves divided into three leaflets and generally has three to seven distinct lobes. Typically they are a shrubby type plant that can grow to eight feet in height, or sometimes can be a climbing plant.

The best way to prevent exposure is the ability to recognize these plants. Conduct an initial survey of the area to determine if the plants are present in the work area, and avoid contact with them.

If plants are located and work must be conducted in that area, have the plants removed if possible. If this is not possible, wear long sleeved shirts, gloves, and a heavy material type pants. Remember not to touch contaminated clothing. There are products available that can be applied to exposed skin, (similar to sunscreen products) prior to working around the plants. Tyvek suits may be another option used at the wearer's discretion to keep poisonous plant oils from getting on clothing. Please note that using Tyvek suits may increase the risk of heat stress conditions so extra precautions should be taken such as more frequent breaks and drinking plenty of fluids.

4. PERSONAL PROTECTIVE EQUIPMENT

The purpose of PPE is to protect employees from hazards and potential hazards they are likely to encounter during site activities. The amount and type of PPE used will be based on the nature of the hazard encountered of anticipated. Respiratory protection will be utilized when an airborne hazard has been identified using real-time air monitoring devices, or as a precautionary measure in areas designated by the RSUM or SSO.

Dermal protection, primarily in the form of chemical-resistant gloves and coveralls, will be worn whenever contact with chemically affected materials (e.g., soil, groundwater, sludge) is anticipated, without regard to the level of respiratory protection required.

On the basis of the hazards identified for this project, the following levels of personal protective equipment (PPE) will be required and used. Changes to the specified levels of PPE will not be made without the approval of the SSO after consultation with the RSUM.

4.1 Conditions Requiring Level D Protection

In general, site activities will commence in Level D PPE unless otherwise specified, or if the SSO determines on site that a higher level of PPE is required. Air monitoring of employee breathing zones will be routinely conducted using real-time air monitoring devices to determine if upgrading to Level C PPE is necessary. Level D PPE will be permitted as long as air monitoring data indicate that airborne concentrations of chemicals of concern are maintained below the site-specific action levels defined in Section 5.2. Level A or B PPE is not anticipated and is therefore not addressed in this plan. If Level A or B PPE is necessary, this HASP will be revised to reflect changes as appropriate.

It is important to note that dermal protection is required whenever contact with chemically-affected materials is anticipated. The following equipment is specified as the minimum PPE required to conduct activities at the Site:

- Work shirt and long pants,
- ANSI- or ASTM-approved steel-toed boots or safety shoes,
- ANSI-approved safety glasses, and
- ANSI-approved hard hat.

Other personal protection readily available for use, if necessary, includes the following items.

- Outer nitrile gloves (11 mil or thicker) and inner nitrile surgical gloves when direct contact with chemically affected soils or groundwater is anticipated (nitrile surgical gloves may be used for collecting or classifying samples as long as they are removed and disposed of immediately after each sampling event).

- Chemical-resistant clothing (e.g., Tyvek or polycoated Tyvek coveralls) when contact with chemically affected soils or groundwater is anticipated.
- Safety shoes/boots with protective overboots or knee-high PVC polyblend boots when direct contact with chemically affected soils is anticipated.
- Hearing protection.
- Sturdy work gloves.
- High-visibility traffic safety vest.

Work will cease and PPE upgraded if action levels specified in Section 5.2 are exceeded. The RSUM will be notified whenever PPE is upgraded or downgraded.

4.2 Conditions Requiring Level C Protection

If air monitoring indicates that the site-specific action levels defined in Section 5.2 are exceeded, workers in the affected area(s) will upgrade PPE to Level C. In addition to the protective equipment specified for Level D, Level C also includes the following items.

- NIOSH-approved half- or full-face air-purifying respirator (APR) equipped with appropriate cartridges (reference Section 5.2). Note: safety glasses are not required when wearing a full-face APR.
- Outer nitrile gloves (11 mil or thicker) and inner nitrile surgical gloves when direct contact with chemically affected soils or groundwater is anticipated (nitrile surgical gloves may be used for collecting or classifying samples as long as they are removed and disposed of immediately after each sampling event).
- Chemical-resistant clothing (e.g., Tyvek or polycoated Tyvek coveralls) when contact with chemically affected soils or groundwater is anticipated.
- Safety shoes/boots with protective overboots or knee-high PVC polyblend boots when direct contact with chemically affected soils is anticipated.
- Hearing protection.
- Sturdy work gloves.

Respirators will be stored in clean containers (i.e., self-sealing bag) when not in use. Respirator cartridges will be replaced in accordance with the following change-out schedule.

Type of Cartridge	Cartridge Change-out Schedule
Particulate (i.e., HEPA)	At least weekly or sooner the employee detects an increase in breathing resistance. This will occur as the filter becomes loaded with particulate matter.
Sorbent (i.e., organic vapor)	At the end of each day's use or sooner if the employee detects an abnormal odor or other indicator.

Personnel who wear air-purifying respirators must be trained in their use and must have successfully passed either a qualitative or quantitative respirator fit test, and medical evaluation within the last 12 months in accordance with and 29 CFR 1910.134.

4.3 Stop Work Conditions

If air monitoring indicates that the site-specific action levels defined in Section 5.2 are exceeded, activities will cease, and personnel must evacuate the designated Exclusion Zone. The PM and RSUM will be contacted immediately.

Work will also cease if unanticipated conditions or materials are encountered or if an imminent danger is identified. The SSO will immediately contact the RSUM for consultation.

5. AIR MONITORING PLAN

Real-time air monitoring devices will be used to analyze airborne contaminant concentrations approximately every 15 minutes in the workers' breathing zones while workers are in the designated Exclusion Zone, or when task or exposure conditions change (whichever frequency is less). If elevated concentrations are indicated, the monitoring frequency will be increased, as appropriate.

Background concentrations will be determined at the beginning of each work shift by collecting several instrument readings upwind of the scheduled activities. Alternatively, background levels can be determined by collecting readings from a nearby (upwind) area that can reasonably be considered unaffected by Site activities.

Real-time measurements will be made as near as feasible to the breathing zone of the worker with the greatest exposure potential in each active work area. If authorized by the RSUM, real time measurements may cease being taken when enough historical data is generated to warrant its cessation. Air monitoring will be reinstated if potential exposure conditions change.

The equipment will be calibrated daily, and the results will be recorded on BC's Air Monitoring Form. The results of air monitoring will also be recorded on the Air Monitoring Form and will be retained in the project files following completion of field activities. A copy of the Air Monitoring Form is located in Appendix A.

5.1 Monitoring Instruments

On-site worker exposure to airborne contaminants will be monitored during intrusive site activities. A calibrated photoionization detector (PID) with a lamp strength of 10.6 eV or flame ionization detector (FID) will be used to monitor changes in personnel exposure to volatile organic compounds (VOCs). The SSO, or designee, will perform routine monitoring during site operations to evaluate concentrations of VOCs in employee breathing zones. If VOCs are detected above predetermined action levels specified in Section 5.2, the procedures found in Section 4 of this HASP will be followed.

Monitoring for personal exposure to H2S and methane with a calibrated multi-gas meter will be conducted during all intrusive activities or at the discretion of the SSO based on site conditions and activities. The equipment will be calibrated in accordance with manufacturer's specifications. If acceptable atmospheric conditions are not met, engineering or venting controls shall be implemented to reduce levels to below the Action Levels stipulated in Section 5.2.

5.2 Site Specific Action Levels

The following action levels were developed for exposure monitoring with real-time air monitoring instruments. Air monitoring data will determine the required respiratory protection levels at the Site during scheduled intrusive activities. The action levels are based on sustained readings indicated by the instrument(s). Air monitoring will be performed and recorded at up to 15-minute intervals.

If elevated concentrations are indicated, the monitoring frequency will be increased, as appropriate. If during this time, sustained measurements are observed, the following actions will be instituted, and the PM and RSUM will be notified. For purposes of this HASP, sustained readings are defined as the average airborne concentration maintained for a period of one (1) minute above established background levels.

Dust – no monitoring based on activities

Soil excavations in areas of known or probable soil impact will require engineering controls to ensure that dust generation does not occur. The SSO will be responsible for monitoring the conditions of excavations and soil piles generated from excavations to ensure that dust conditions do not develop. The contractor responsible for the excavation will have means present at all times to keep the soil moist, and will implement this engineering control if dust generation or the potential for dust generation is present. The Site SSO will monitor conditions and verify that the contractor is properly implanting the dust control measure(s). Engineering controls will generally involve wetting the soil and/or excavation, but could involve other control measures as needed. If the SSO notes dry soil conditions associated with impacted soil excavations or stockpiles, work will be stopped and will not resume until the engineering controls are in place. If it is found that engineering controls are not effective for dust control and monitoring is needed to ensure the safety of site workers, the SSO will contact the RSUM and PM immediately and Action Levels will be established by the RSUM. Work will not resume until an approved monitoring method is in place to ensure worker safety.

VOCs

Activity	Action Level	Level of Respiratory Protection
Intrusive activities	< 5 ppm above background (VOCs)	Level D: No respiratory protection required.
	5 to 15 ppm (VOCs)	Increase engineering controls to reduce potential employee exposure to VOCs and re-monitor: ▪ If VOC levels don't' exceed the first Action Limit - Use: Level D ▪ If VOC levels exceed the first Action Limit - Use Level C (half-or full-face air-purifying respirator fitted with organic vapor filter cartridges) Contact RSUM prior to respirator upgrade.
	> 15 ppm (VOCs)	Cease operations and evacuate work area. Contact RSUM and PM immediately.

Hydrogen Sulfide (H2S) and Methane

Monitoring for personal exposure to H2S and methane with a calibrated multi-gas meter will be conducted during all intrusive activities or at the discretion of the SSO based on site conditions and activities. No confined space entry will be conducted unless RSUM approval is provided.

No confined space entry is anticipated for this work, but intrusive activities (soil borings, soil sampling, cover thickness determinations, ground water sampling, well installation, etc) may occur.

A multi-gas monitoring device will be used to verify that atmospheric conditions in a suspect area are acceptable for entry or performing work. Common situations would include monitoring for hydrogen sulfide, oxygen levels and lower explosive limit (LEL; often due to a potential presence of methane). For purposes of this HASP, acceptable atmospheric concentrations for these compounds are as follows:

- Hydrogen sulfide less than 5 parts per million (ppm);
- LEL (methane) less than 10%; and
- Oxygen greater than 19.5 % and less than 22%.

If acceptable atmospheric conditions are not met, engineering or venting controls shall be implemented to reduce levels. It is important to note that if other compounds of concern can reasonably be expected, the RSUM will be contacted for appropriate air monitoring instrumentation and acceptable atmospheric concentrations.

The equipment will be calibrated in accordance with manufacturer's specifications. The results of air monitoring will be recorded in the field notebook or an appropriate BC form. For reference, a copy of an Air Monitoring Form is located in Appendix A.

6. SITE CONTROL MEASURES

The SSO will conduct a safety inspection of the work site before each day's activities begin to verify compliance with the requirements of the HASP. Results of the first day's inspection will be documented on the Site Safety Checklist. A copy of the checklist is included in Appendix B. Thereafter, the SSO should document unsafe conditions or acts, along with corrective action, in the project field log book.

Procedures must be followed to maintain site control so that persons who may be unaware of site conditions are not exposed to hazards. The work area will be barricaded by tape, warning signs, or other appropriate means. Site equipment or machinery will be secured and stored safely.

Access to the specified work area will be limited to authorized personnel. Only BC employees and designated BC subcontracted personnel, as well as designated employees of the client, will be admitted to the work site. Personnel entering the work area are required to sign the signature page of this HASP, indicating they have read and accepted the health and safety practices outlined in this plan.

In some instances it may be necessary to define established work zones: an Exclusion Zone, a Contamination Reduction Zone, and a Support Zone. Work zones may be established based on the extent of anticipated contamination, projected work activities, and the presence or absence of non-project personnel. The physical dimensions and applicability of work zones will be determined for each area based on the nature of job activity and hazards present. Within these zones, prescribed operations will commence using appropriate PPE. Movement between zones will be controlled at checkpoints. Do not smoke, eat, drink, or apply cosmetics while in chemically-affected areas of the site or before proper decontamination.

Considerable judgment is needed to maintain a safe working area for each zone, balanced against practical work considerations. Physical and topographical barriers may constrain ideal locations. Field measurements combined with climatic conditions may, in part, determine the control zone distances. Even when work is performed in an area that does not require the use of chemical-resistant clothing, work zone procedures may still be necessary to limit the movement of personnel and retain adequate site control.

Personnel entering the designated Exclusion Zone should exit at the same location. There must be an alternate exit established for emergency situations. In all instances, worker safety will take precedence over decontamination procedures. If decontamination of personnel is necessary, exiting the Site will include the decontamination procedures described in the following section.

Practice the "buddy system" as appropriate for high hazard site activities as directed by the SSO.

7. DECONTAMINATION PROCEDURES

Decontamination will take place in the decontamination area identified on-Site. Workers, PPE, sampling equipment, and heavy equipment leaving the exclusion area will be inspected to determine the level of decontamination necessary to prevent the spread of potentially hazardous materials. Unnecessary equipment and support vehicles are to be left outside the designated Exclusion Zone so that decontamination will not be necessary.

Despite protective procedures, personnel may come in contact with potentially hazardous compounds while performing work tasks. If so, decontamination needs to take place using an Alconox or TSP wash, followed by a rinse with clean water. Standard decontamination procedures for levels C and D are as follows.

- equipment drop,
- boot cover and outer glove wash and rinse,
- boot cover and outer glove removal,
- suit removal,
- safety boot wash and rinse,
- inner glove wash and rinse,
- respirator removal,
- inner glove removal, and
- field wash of hands and face.

Site workers should employ only applicable steps in accordance with level of PPE worn and extent of contamination present. The SSO shall maintain adequate quantities of clean water to be used for personal decontamination (i.e., field wash of hands and face) whenever a suitable washing facility is not located in the immediate vicinity of the work area.

Disposable items will be disposed of in an appropriate container. Wash and rinse water generated from decontamination activities will be handled and disposed of properly. Non-disposable items (i.e., respirators) may need to be cleaned or sanitized before reuse. Each site worker is responsible for the maintenance, decontamination, and sanitizing of their own PPE.

Used equipment may be decontaminated as follows.

- Remove adhered materials (i.e., dirt or mud) to increase the effectiveness of the decontamination process.
- An Alconox or TSP and water solution may be used to wash the equipment.
- The equipment will then be rinsed with clean water until it is determined clean.

Each person must follow these procedures to reduce the potential for transferring chemically affected materials off site.

8. TRAINING REQUIREMENTS

BC Site personnel, including subcontractors and visitors conducting work in controlled areas of the Site, must have completed the appropriate training as required by 29 CFR 1910.120. In addition, the SSO will have completed the 8-hour Site Supervisor course, have current training in first aid and CPR, and any additional training appropriate to the level of site hazards. Further site-specific training will be conducted by the SSO prior to the initiation of project activities. This training will include, but will not necessarily be limited to, emergency procedures, site control, personnel responsibilities, and the provisions of this HASP. Each employee will document that they have been briefed on the hazards identified at the site and that they have read and understand the requirements of this HASP by signing the H&S Plan Acknowledgement Form attached as Appendix C.

A daily morning briefing to cover safety procedures and contingency plans in the event of an emergency is to be included with a discussion of the day's activities. These daily meetings will be recorded on the Daily Tailgate Safety Meeting Form. A copy of the Daily Tailgate Safety Meeting Form is included in Appendix D.

9. MEDICAL SURVEILLANCE REQUIREMENTS

BC Site personnel, including subcontractors and site visitors, who will or may work in an area designated as an exclusion zone must have fulfilled the appropriate medical monitoring requirements in accordance with 29 CFR 1910.120(f). Each individual entering an exclusion zone must have successfully completed an annual surveillance examination and/or an initial baseline examination within the last 12 months.

Medical surveillance is conducted as a routine program for BC field staff in accordance with the requirements of 29 CFR 1910.120(f). There will not be any special medical tests or examinations required for staff involved in this project.

A Hepatitis B vaccination will be offered to BC personnel before the person participates in a task where direct exposure to potentially infectious materials is a possibility (i.e., first aid or CPR). For personnel who have potential exposure to sanitary wastes, a current tetanus/diphtheria inoculation or booster is recommended.

10. CONTINGENCY PROCEDURES

Minimum emergency equipment maintained on site will include a fully charged ABC dry chemical fire extinguisher, an adequately stocked first aid kit, and an emergency eyewash station (when corrosive chemicals are present). In addition, employees will consider maintaining the personal emergency supply items listed in Section 3: Natural Phenomena, as appropriate.

In the event of an emergency, site personnel will signal distress with three blasts of a horn (a vehicle horn will be sufficient), or other predetermined signal. Communication signals, such as hand signals, must be established where communication equipment is not feasible or in areas of loud noise.

It is the SSO's duty to evaluate the seriousness of the situation and to notify appropriate authorities. The first part of this plan contains emergency telephone numbers as well as directions to the hospital. Nearby telephone access must be identified and available to communicate with local authorities. If a nearby telephone is not available, a cellular telephone will be maintained on site during work activities. The operation of the cellular phone will be verified to ensure that a signal can be achieved at the work location.

The SSO, or designee, should contact local emergency services in the event of an emergency. After emergency services are notified, the PM and RSUM will be notified of the situation as soon as possible. If personal injury, property damage or equipment damage occurs, the PM and BC Risk Manager will be contacted as soon as practicable. An Accident/Incident Investigation Report will be completed within 24 hours by the SSO, or other designated person. A copy of the Accident/Incident Investigation Report is included in Appendix E.

MSHA Immediate Notification Rule:

At projects conducted at mining facilities, incident reporting requirements differ from OSHA standards. Site-specific MSHA reporting requirements must be addressed in conjunction with the RSUM and PM.

In order to comply with the MSHA Immediate Notification rule (50.10), Brown and Caldwell has developed the 'MSHA Immediately Reportable Accident/Injury Notification Procedure'. Note that incidents meeting the definition of "immediately reportable" must be reported to MSHA within 15 minutes of occurrence.

http://search.bc.com/health_safety/documents/BC_MSHANotificationProcedure.doc

This new procedure can be accessed by clicking the link above and includes a decision flowchart and accompanying instructions to help guide field personnel in the event of a reportable accident/injury at a mining site.

10.1 Injury or Illness

If an exposure or injury occurs, work will be temporarily halted until an assessment can be made to determine it is safe to continue work. The SSO, in consultation with the RSUM, will make the decision regarding the safety of continuing work. The SSO will conduct an investigation to determine the cause of the incident and steps to be taken to prevent recurrence.

In the event of an injury, the extent and nature of the victim's injuries will be assessed and first aid/CPR will be rendered as appropriate. If necessary, emergency services will be contacted or the individual may be transported to the nearby medical center. The mode of transportation and the eventual destination will be based on the nature and extent of the injury. A hospital route map is presented at the front of this HASP.

In the event of a life-threatening emergency, the injured person will be given immediate first aid and emergency medical services will be contacted by dialing the number listed in the Critical Project Information section at the beginning of this plan. The individual rendering first aid will follow directions given by emergency medical personnel via telephone.

10.2 Vehicle Collision or Property Damage

If a vehicle collision or property damage event occurs, the SSO, or designee, will contact the BC Risk Manager for appropriate action.

10.3 Fire

In the event of fire, the alarm will be sounded and Site personnel will evacuate to a safe location (preferably upwind). The SSO, or designee, should contact the local fire department immediately by dialing 911. When the fire department arrives, the SSO, or designated representative, will advise the commanding officer of the location and nature of the fire nature, and identification of hazardous materials on site. Only trained, experienced fire fighters should attempt to extinguish substantial fires at the Site. Site personnel should not attempt to fight fires, unless properly trained and equipped to do so. Site personnel should not attempt to fight a fire if it poses a risk to their personal safety.

Note that smoking is not permitted in controlled areas (i.e., exclusion or contamination reduction zones), near flammable or combustible materials, or in areas designated by the facility as non-smoking areas.

10.4 Underground Utilities

In the event that an underground conduit is damaged during subsurface work, mechanized equipment will immediately be shut off and personnel will evacuate the area until the nature of the piping can be determined. Depending on the nature of the broken conduit (e.g., natural gas, water, or electricity), the appropriate local utility will be contacted.

10.5 Site Evacuation

The SSO will designate evacuation routes and refuge areas to be used in the event of a Site emergency. Site personnel will stay upwind from vapors or smoke and upgradient from spills. If

workers are in an Exclusion or Contamination Reduction Zone at the start of an emergency, they should exit through the established decontamination corridors, if possible. If evacuation cannot be done through an established decontamination area, site personnel will go to the nearest safe location and remove chemically-affected clothing there or, if possible, leave it near the Exclusion Zone. Personnel will assemble at the predetermined refuge following evacuation and decontamination. The SSO, or designated representative, will count and identify site personnel to verify that all have been evacuated safely.

10.6 Spill of Hazardous Materials

If a hazardous material spill occurs, site personnel should locate the source of the spill and determine the hazard to the health and safety of site workers and the public. Attempts to stop or reduce the flow should only be performed if it can be done without risk to personnel.

Isolate the spill area and do not allow entry by unauthorized personnel. De-energize sources of ignition within 100 feet of the spill, including vehicle engines. Should a spill be of the nature or extent that it cannot be safely contained, or poses an imminent threat to human health or the environment, an emergency cleanup contractor will be called out as soon as possible. Spill containment measures listed below are examples of responses to spills.

- Right or rotate containers to stop the flow of liquids. This step may be accomplished as soon as the spill or leak occurs, providing it is safe to do so.
- Sorbent pads, booms, or adjacent soil may be used to dike or berm materials, subject to flow, and to solidify liquids.
- Sorbent pads, soil, or booms, if used, must be placed in appropriate containers after use, pending disposal.
- Contaminated tools and equipment shall be collected for subsequent cleaning or disposal.

11. DOCUMENTATION

The implementation of the HASP must be documented on the appropriate forms (see appendices) to verify employee participation and protection. In addition, the regulatory requirements must be met for recordkeeping on training, medical surveillance, injuries and illnesses, exposure monitoring, health risk information, and respirator fit-tests. Documentation of each BC employee's health and safety records is maintained by the Health and Safety Data Manager in Walnut Creek, California.

Health and safety documentation and forms completed, as specified by this plan, are to be retained in the project file.

Other relevant project-specific health and safety documents, such as MSDSs or client-specified procedures, will be attached to this HASP in Appendix F.

APPENDIX A

Air Monitoring Form

BROWN AND CALDWELL

Air Monitoring Form

Page ____ of ____

Instructions: Complete this form immediately prior to project start.

Name of Project/Site:	**Project No:**
Project/Site Location:	
Employee Performing Air Monitoring: (Print and Sign):	**Date:**

Photo Ionization/Flame Ionization Detectors (PIDs/FIDs)

☐ PID ☐ FID	**Manufacturer:**	**Model:**	**Serial #:**
Initial Calibration Reading:		**End-of-Use Calibration Reading:**	
Calibration Standard/Concentration:			

Mini-RAM Dust Monitor

Manufacturer:	**Model:**	**Serial #:**
Zeroed in Z-Bag? ☐ Yes ☐ No		

Monitoring Data

Time	Location and Activity	PID/FID (ppm)	Mini-RAM (mg/m³)	Time	Location and Activity	PID/FID (ppm)	Mini-RAM (mg/m³)

APPENDIX B

Site Safety Checklist

BROWN AND CALDWELL

Site Safety Checklist

Instructions: Complete this form immediately prior to project start.

Name of Project/Site:	**Project No:**
Project/Site Location:	
Employee Completing Checklist: (Print and Sign):	**Date:**

Yes	No	N/A		Yes	No	N/A	
☐	☐	☐	Written Health and Safety (H&S) Plan is on site?	☐	☐	☐	Respirators are available, properly cleaned, and stored?
☐	☐	☐	Addenda to the H&S Plan are documented on site?	☐	☐	☐	Overhead utilities do not present a hazard to equipt./personnel?
☐	☐	☐	H&S Plan information matches conditions/activities at the site?	☐	☐	☐	Traffic control measures have been implemented?
☐	☐	☐	H&S Plan read/signed by all site personnel, including visitors?	☐	☐	☐	Trenches and excavations are safe for entry?
☐	☐	☐	Daily tailgate H&S meetings have been held/documented?	☐	☐	☐	Soil Spoils are at least 2 feet from the edge of the excavation?
☐	☐	☐	Site personnel have required training and medical?	☐	☐	☐	Emergency/FA equipt. is on site as described in the H&S Plan?
☐	☐	☐	Air monitoring is performed/documented per the H&S Plan?	☐	☐	☐	Drinking water is readily available?
☐	☐	☐	Air monitoring equipment has been calibrated daily?	☐	☐	☐	Phone is readily available for emergency use?
☐	☐	☐	Site zones are set up and observed where appropriate?	☐	☐	☐	Utility locator has cleared subject locations?
☐	☐	☐	Access to the work area limited to authorized personnel?	☐	☐	☐	Proper drum and material handling techniques are used?
☐	☐	☐	Decontamination procedures followed/match the H&S Plan?	☐	☐	☐	Waste containers/drums are labeled appropriately?
☐	☐	☐	Decontamination stations (incl. hand/face wash) are set up and used?	☐	☐	☐	Ext. cords are grounded/protected from water/vehicle traffic?
☐	☐	☐	PPE used matches H&S Plan requirements?	☐	☐	☐	Tools and equipment are in good working order?
☐	☐	☐	Hearing protection used where appropriate?	☐	☐	☐	GFCIs used for portable electrical tools and equipment?

Notes

(All "no" answers must be addressed and corrected immediately. Note additional health and safety observations here):

APPENDIX C

H&S Plan Acknowledgement Form

BROWN AND CALDWELL

H&S Plan Acknowledgement Form

Instructions: Complete this form immediately prior to project start or as new personnel join the project.

Name of Project/Site:	**Project No:**
Project/Site Location:	
Employee Performing Briefing: (Print and Sign):	**Date:**

Employee Acknowledgement:

The following signatures indicate that these personnel have read and/or been briefed on this Health and Safety (H&S) Plan and understand the potential hazards/controls for the work to be performed.

Important Notice to Subcontractor(s):

Subcontractors are responsible for developing, maintaining, and implementing their own health and safety programs, policies, procedures and equipment as necessary to protect their workers, and others, from their activities. Subcontractors shall operate equipment in accordance with their standard operating procedures as well as manufacturer's specifications. Any project monitoring activities conducted by BC at the Site shall not in any way relieve subcontractors of their critical obligation to monitor their operations and employees for the determination of exposure to hazards that may be present at the Site and to provide required guidance and protection. If requested, subcontractors will provide BC with a copy of their own H&S Plan for this project or other health and safety program documents for review.

BC's Health and Safety Plan has been prepared specifically for this project and is intended to address health and safety issues solely with respect to the activities of BC's own employees at the site. A copy of BC's H&S Plan may be provided to subcontractors in an effort to help them identify expected conditions at the site and general site hazards. The subcontractor shall remain responsible for identifying and evaluating hazards at the site as they pertain to their activities and for taking appropriate precautions. For example, BC's H&S Plan does not address specific hazards associated with tasks and equipment that are particular to the subcontractor's scope of work and site activities. (e.g., operation of a drill rig, excavator, crane or other equipment). Subcontractors are not to rely on BC's H&S Plan to identify all hazards that may be present at the Site. Subcontractor personnel are expected to comply fully with subcontractor's Health and Safety Plan and to observe the minimum safety guidelines applicable to their activities which may be identified in the BC H&S Plan. Failure to do so may result in the removal of the subcontractor or any of the subcontractor's workers from the job site.

Print	Sign	Date	Print	Sign	Date

APPENDIX D

Daily Tailgate Meeting Form

BROWN AND CALDWELL

Daily Tailgate Meeting Form

Name of Project/Site:	Project No:
Project/Site Location:	
Employee Completing Form: (Print and Sign):	Date:

Employee Acknowledgement:

The following signatures indicate that these personnel have read and/or been briefed on this Health and Safety (H&S) Plan and understand the potential hazards/controls for the work to be performed.

Important Notice to Subcontractor(s):

Subcontractors are responsible for developing, maintaining, and implementing their own health and safety programs, policies, procedures and equipment as necessary to protect their workers, and others, from their activities. Subcontractors shall operate equipment in accordance with their standard operating procedures as well as manufacturer's specifications. Any project monitoring activities conducted by BC at the Site shall not in any way relieve subcontractors of their critical obligation to monitor their operations and employees for the determination of exposure to hazards that may be present at the Site and to provide required guidance and protection. If requested, subcontractors will provide BC with a copy of their own H&S Plan for this project or other health and safety program documents for review.

BC's Health and Safety Plan has been prepared specifically for this project and is intended to address health and safety issues solely with respect to the activities of BC's own employees at the site. A copy of BC's H&S Plan may be provided to subcontractors in an effort to help them identify expected conditions at the site and general site hazards. The subcontractor shall remain responsible for identifying and evaluating hazards at the site as they pertain to their activities and for taking appropriate precautions. For example, BC's H&S Plan does not address specific hazards associated with tasks and equipment that are particular to the subcontractor's scope of work and site activities. (e.g., operation of a drill rig, excavator, crane or other equipment). Subcontractors are not to rely on BC's H&S Plan to identify all hazards that may be present at the Site. Subcontractor personnel are expected to comply fully with subcontractor's Health and Safety Plan and to observe the minimum safety guidelines applicable to their activities which may be identified in the BC H&S Plan. Failure to do so may result in the removal of the subcontractor or any of the subcontractor's workers from the job site.

Print	Sign	Date	Print	Sign	Date

Plan of the Day

(Describe the activities that are planned to be performed today)

Potential Hazards and Topics Discussed

(Describe the potential hazards and controls that may be associated with planned activities)

☐ Electrical ☐ Chemical ☐ Biological ☐ Physical ☐ Other (specify):

APPENDIX E

Incident Investigation Report

BROWN AND CALDWELL

Incident Investigation Report

Instructions:

If an accident or incident occurs, complete all applicable information in this form, make a copy for your records, and immediately forward the original to the office Health and Safety Coordinator (HSC). If fields are not applicable, indicate with "N/A". Use separate sheet(s) if necessary and attach sketches, photographs, or other information that may be helpful in understanding how the accident/incident occurred.
HSC – Review and enter report into the BC Online Safety Observation and Incident Reporting System within 3 workdays of receipt. File original in appropriate office health and safety file.

NOTE:

This report is important – please take the time necessary to properly complete it. Incomplete reports will be forwarded to appropriate management for review and action.

General Information

Date of Accident/Incident	**Time of Accident/Incident:**	**Date Accident/Incident Reported:**	**To Whom:**
Exact Location of Accident/Incident (Street, City, State)**:**			**BC Office:**
Name Project:			**Project Number:**
Employee Completing the Investigation (Print and Sign)**:**			**Date:**

Injured/Ill Employee/Property Damage Information

Employee Name:	**Employee No.**	**Department:**	**Phone Number:**
Job Title:		**Manager's Name and Phone Number:**	
Nature of Injury/Illness (laceration, contusion, strain, etc.)**:**		**Body Part Affected** (arm, leg, head, hand, etc.)**:**	
Describe Property Damage and Estimate Loss :			

Description of Accident/Incident

Describe the accident sequentially, beginning with the initiating event, and followed by secondary and tertiary events. End with the nature and extent of injury/damage. Name any object or substance and tell how they were included. Examples: 1) Employee was pulling utility cart that was loaded with wastepaper from office area to hallway. Wheel of utility cart caught against door casing. Bags of heavy wastepaper that were in cart fell to end of cart. Cart tipped over onto foot of employee. Right foot was crushed between utility cart and door casing, resulting in severe contusion to right foot of employee. 2) Employee was driving rental car from office to project site. Car struck icy section of road. Employee lost control of vehicle, which skidded across road into concrete abutment on side of road. Accident resulted in damage to right fender, tire, headlight, and grill.

BROWN AND CALDWELL

Incident Investigation Report

Analysis of Accident Causes

Immediate Causes - Substandard Actions

What substandard actions caused or could have caused the accident/incident? State the actions on the part of the employee or others that contributed to the occurrence of the accident/incident. Examples: 1) Employee overloaded the utility cart with wastepaper. 2) Employee exceeded safe speed on icy road, and was inattentive to hazard.

Codes (check all that apply)

- ☐ 1. Operating equipment without authority
- ☐ 2. Failure to warn
- ☐ 3. Failure to secure
- ☐ 4. Operating at improper speed
- ☐ 5. Making safety devices inoperable
- ☐ 6. Removing safety devices
- ☐ 7. Using defective equipment
- ☐ 8. Using equipment improperly
- ☐ 9. Failure to use PPE properly
- ☐ 10. Improper loading
- ☐ 11. Improper placement
- ☐ 12. Improper lifting
- ☐ 13. Improper position for task
- ☐ 14. Servicing equipment in operation
- ☐ 15. Horseplay
- ☐ 16. Alcohol or drug influence
- ☐ 17. Other (specify)

Immediate Causes - Substandard Conditions

What substandard conditions caused or could have caused the accident/incident? State the conditions that existed at the time of the accident (the specific control factors that were or may have been the direct or immediate cause or causes of the accident). Examples: 1) Wheel of utility cart was worn and would not roll properly; utility cart was overloaded with wastepaper. 2) Road was covered with icy spots; weather was foggy.

Codes (check all that apply)

- ☐ 1. Inadequate guards or barriers
- ☐ 2. Inadequate or improper PPE
- ☐ 3. Defective tools, equipment, or materials
- ☐ 4. Congestion or restricted action
- ☐ 5. Inadequate earning system
- ☐ 6. Fire and explosion hazards
- ☐ 7. Poor housekeeping
- ☐ 8. Noise exposures
- ☐ 9. Radiation exposures
- ☐ 10. High or low temperature exposures
- ☐ 11. Inadequate or excess illumination
- ☐ 12. Inadequate ventilation
- ☐ 13. Hazardous environ. conditions (vapors, dusts, etc.)
- ☐ 14. Other (specify)

Basic Causes - Personal and Job Factors

What personal and/or job factors caused or could have caused the accident/incident? State the influencing factors or underlying causes, either conditions or actions or both, that contributed to the accident/incident. Examples: 1) Employee had not been instructed in overloading hazards. 2) Employee had not been trained in driving under winter conditions; company has no driver training program.

Codes (check all that apply)

Personal Factors

- ☐ 1. Inadequate capability ☐ 2. Lack of knowledge ☐ 3. Lack of skill ☐ 4. Improper motivation
- ☐ 5. Other (specify):_____

Job Factors

- ☐ 1. Inadequate leadership/supervision ☐ 2. Inadequate engineering ☐ 3. Inadequate purchasing ☐ 4. Inadequate maintenance ☐ 5. Inadequate tools/equipment
- ☐ 6. Inadequate work standards/procedures ☐ 7. Inadequate Wear and tear ☐ 8. Abuse or misuse
- ☐ 9. Other (specify):

Remedial Actions

Describe the actions taken or planned to prevent recurrence of accident/incident - provide the implementation date and person responsible for any planned corrective action.. Examples: 1) Wheels of utility cart were replaced with larger size wheels; all carts were inspected for safe operation; employees were instructed in overloading hazards. 2) All project personnel were instructed at the safety training meeting on driving under hazardous conditions; driver training program will be implemented.

Codes (check all that apply)

Job Factors

- ☐ 1. Reinstruction of personnel involved ☐ 2. Reprimand of personnel involved ☐ 3. Temporary/permanent reassignment of personnel ☐ 4. Action to improve clean-up
- ☐ 5. Equipment repair or replacement ☐ 6. Improve design ☐ 7. Improve construction ☐ 8. Improve PPE ☐ 9. Install of safety guard or device ☐ 10. Work method change
- ☐ 11. Order use of safer materials ☐ 12. Regional Safety Unit Manager Review
- ☐ 13. Other (specify):

APPENDIX F

Miscellaneous Health and Safety Information

APPENDIX D. TECHNICAL ASSISTANCE PLAN

APPENDIX D

TECHNICAL ASSITANCE PLAN

Within 30 days of receiving a request from U.S. EPA, a Technical Assistance Plan will be developed that meets the requirements as expressed in the following excerpt from the SOW.

In addition to any assistance with community involvement activities, the Settling Defendants shall prepare a Technical Assistance Plan (TAP) that will provide and administer $50,000 for a qualified community group to hire Technical Advisors, independent from the Settling defendants to help interpret and comment on Site-related documents developed under this SOW. Within 30 days after a request by U.S. EPA, the Settling Defendants shall submit to U.S. EPA its Technical Assistance Plan for Agency approval.

As part of the TAP, the Settling Defendants shall propose methods, including an application process, minimum eligibility requirements and selection criteria for awarding, and administering the funds above. Any eligible group shall be:

1. A group of people who may be affected by a release or threatened release a the Site;
2. Incorporated as a nonprofit organization for the purposes of the Site or otherwise established as a charitable organization that operates within the geographical range of the Site and is already incorporated as a nonprofit organization; and
3. Able to demonstrate its capability to adequately and responsibly manage any funds awarded.

Any group is ineligible if it is:

1. A potentially responsible party (PRP) at the Site or represents such a PRP or is a group whose ability to represent the interests of the affected individuals might be limited as a result of receiving money or services from a PRP;
2. Affiliated with a national organization;
3. An academic institution;
4. A political subdivision; or
5. A group established or presently sustained by government entities, an RP, or any ineligible entity. Selection criteria should be consistent with 40 C.F.R. 35.4155. Funds may be awarded to only one qualified group at a time for purposes of this CD and SOW.

Also as part of the TAP, Settling Defendants shall include a proposed plan for documenting the eligibility of the selected community group, and informing the group and U.S. EPA if it believes any individual member is ineligible (consistent with 40 C.F.R. 35.4030) to participate in the group. Settling Defendants shall also include a plan for informing the selected group of the activities that can and cannot be undertaken with Settling Defendants' funds. The lists of eligible and ineligible activities should be consistent with 40 C.F.R. 35.4070 and 35.4075, respectively.

The TAP shall also include a proposal for offering and, if accepted, transferring up to $5,000 to the selected group to cover its estimated need for funds for an initial start-up period. Also as part of the TAP, Settling Defendants shall include a plan for providing assistance to the selected community group in the solicitation for an independent Technical Advisor. As long as the group documents its selection and the advisor selected

by the group satisfies the requirements specified in 40 C.F.R. 35.4190 and 35.4195, Settling Defendants shall accept the group's choice. Finally, Settling Defendants shall include a proposed plan for negotiating a contract with the selected community organization and the independent Technical Advisor. The contract shall specify the duties of the Settling Defendants, community group, and Technical Advisor, respectively, and establish a dispute resolution process. Settling Defendants shall notify U.S. EPA of any differences between the final contract and the attached draft contract.

The Settling Defendants may hire a third party to coordinate and administer the TAP (hereinafter referred to as the TAP Coordinator). However, any such TAP Coordinator shall be approved by U.S. EPA. It is the Settling Defendant's burden to demonstrate that the TAP Coordinator is qualified to perform this task. If the Settling Defendants opt to hire a TAP Coordinator, then it shall submit in writing that person's name, title, and qualifications to U.S. EPA within 15 days of the effective date of this Consent Decree. Additionally, the Settling Defendants shall designate within 15 days of the effective date of this Consent Decree an outreach coordinator who will be responsive to the public's inquiries and questions about the Site, including information about the application process and administration of the TAP. Settling Defendants shall also propose a plan for arranging for and hosting meetings between its Outreach Coordinator, the community group, the Technical Advisor, and other interested individuals. The Settling Defendants shall provide U.S. EPA quarterly progress reports regarding the implementation of the TAP. To the extent practicable, the Settling Defendants shall:

1. Select the TAP recipient;
2. Release an initial $5,000 in start-up expenses;
3. Confirm the Technical Advisor selection; and
4. Finalize the contract with the community group and its advisor, at least by the date on which the Draft RDRA Work Plan is due to U.S. EPA.

If the Community Group demonstrates, consistent with the criteria specified in 40 C.F.R. 35.4065, that it needs additional funds for TAP activity, the Community Group will submit a request to U.S. EPA. If the request meets the criteria specified in 40 C.F. R. §35.4065, additional monies may be awarded. Any unobligated funds shall revert to the Settling Defendants at the end of the project.