Lancaster Laboratories Analytical Report
2425 New Holland Pike, Lancaster, PA 17603

Sample Number: AQ 3865292

Collected: 07/25/2002 15:40 by JE

Account: 10160

Submitted: 07/27/2002 10:15
Reported: 08/01/2002 at 11:46

DaimlerChrysler Corporation
PO Box 537933
Livonia MI 48153-7933

SVE59NW Tedlar Bag Sample
Site Code: SC001 RFA#: ET02031
Dayton Thermal/Dayton, OH
S59NW **SDG#: DCK20-04**

CAT No.	Analysis Name	CAS Number	As Received Result	Method Detection Limit	Units	Dilution Factor

Laboratory Chronicle

CAT No.	Analysis Name	Method	Trial#	Analysis Date and Time	Analyst	Dilution Factor
07869	TO 14 VOA Ext. List Tedlar	EPA TO14	1	07/28/2002 22:12	Matthew S Thomas	83
07869	TO 14 VOA Ext. List Tedlar	EPA TO14	1	07/28/2002 23:00	Matthew S Thomas	12
07870	TO 14 VOA Ext List cont Tedlar	EPA TO14	1	07/28/2002 22:12	Matthew S Thomas	83
07870	TO 14 VOA Ext List cont Tedlar	EPA TO14	1	07/28/2002 23:00	Matthew S Thomas	12

Lancaster Laboratories Analytical Report
2425 New Holland Pike, Lancaster, PA 17603

VOLATILE ORGANICS IN AIR
TEDLAR BAG SAMPLE
TENTATIVELY IDENTIFIED COMPOUNDS

Sample No.: S59NW Date Collected: 07/25/02 Date Received: 07/27/02
Lab Sample ID: 3865292 Date Analyzed: 07/28/02 Time Analyzed: 23:00
Injection Volume: 500 cc Nominal Volume: 250 cc Dilution Factor: 12.0
Instrument ID: HP4224 Lab File ID: C:\HPCHEM\1\DATA\JUL28\1301013.D
UNITS = ppb(v)

CAS RN	COMPOUND NAME	R.T.	ESTIMATED CONCENTRATION	Q
78-78-4	Butane, 2-methyl-	8.30	49	J D
67-63-0	Isopropyl Alcohol	11.15	48	J D
107-83-5	Pentane, 2-methyl-	11.37	53	J D
	Unknown aliphatic hydrocarbon	20.52	79	J D
	Unknown aliphatic hydrocarbon	21.69	80	J D
	Unknown aliphatic hydrocarbon	26.51	110	J D
104-76-7	1-Hexanol, 2-ethyl-	27.06	38	J D
	Unknown aliphatic hydrocarbon	27.48	68	J D
	Unknown siloxane	27.97	100	J D
	Unknown	31.42	42	J D

B = Compound was found in method blank. D = analysis of diluted sample.
J = Estimated concentration assuming identical response factor to that of the internal standard with retention time closest to the TIC.

Lancaster Laboratories Analytical Report
2425 New Holland Pike, Lancaster, PA 17603

VOLATILE ORGANICS IN AIR
TEDLAR BAG SAMPLE
ANALYSIS DATA SHEET

Sample No.: S59NW Date Collected: 07/25/02 Date Received: 07/27/02
Lab Sample ID: 3865292 Date Analyzed: 07/28/02 Time Analyzed: 23:00
Injection Volume: 500 cc Nominal Volume: 250 cc Dilution Factor: 12.0
Instrument ID: HP4224 Lab File ID: C:\HPCHEM\1\DATA\JUL28\1301013.D

CAS RN	COMPOUND NAME	CONCENTRATION UNITS: MDL ppb(v)	Q
115-07-1	Propene	9	J D
75-71-8	Dichlorodifluoromethane	2	U
75-45-6	Chlorodifluoromethane	230	D
76-14-2	Freon 114	2	U
74-87-3	Chloromethane	2	U
75-01-4	Vinyl Chloride	2	U
106-99-0	1,3-Butadiene	12	U
74-83-9	Bromomethane	2	U
75-00-3	Chloroethane	2	U
75-43-4	Dichlorofluoromethane	2	U
75-69-4	Trichlorofluoromethane	6	J D
109-66-0	Pentane	14	D
107-02-8	Acrolein	8	J D
75-35-4	1,1-Dichloroethene	600	D
76-13-1	Freon 113	10	J D
67-64-1	Acetone	78	D
74-88-4	Methyl Iodide	2	U
75-15-0	Carbon Disulfide	17	D
75-05-8	Acetonitrile	6	U
107-05-1	3-Chloropropene	6	U
75-09-2	Methylene Chloride	23	D
75-65-0	tert-Butyl Alcohol	2	U
107-13-1	Acrylonitrile	6	U
156-60-5	trans-1,2-Dichloroethene	24	D
1634-04-4	Methyl t-Butyl Ether	2	U
110-54-3	Hexane	17	D
75-34-3	1,1-Dichloroethane	160	D
108-05-4	Vinyl Acetate	2	U
156-59-2	cis-1,2-Dichloroethene	520	D
78-93-3	2-Butanone	38	D
141-78-6	Ethyl Acetate	2	U
96-33-3	Methyl Acrylate	2	U
67-66-3	Chloroform	8	J D
71-55-6	1,1,1-Trichloroethane	3200	D

U = Compound was undetected at the specified limit of quantitation.
B = Compound was found in method blank. D = analysis of diluted sample.
J = Compound was detected, but below the limit of quantitation.
NOTE: Limits of detection were raised due to the high concentration of volatile organic compounds in this sample.

Lancaster Laboratories Analytical Report
2425 New Holland Pike, Lancaster, PA 17603

VOLATILE ORGANICS IN AIR
TEDLAR BAG SAMPLE
ANALYSIS DATA SHEET

Sample No.: S59NW Date Collected: 07/25/02 Date Received: 07/27/02
Lab Sample ID: 3865292 Date Analyzed: 07/28/02 Time Analyzed: 23:00
Injection Volume: 500 cc Nominal Volume: 250 cc Dilution Factor: 12.0
Instrument ID: HP4224 Lab File ID: C:\HPCHEM\1\DATA\JUL28\1301013.D

CAS RN	COMPOUND NAME	CONCENTRATION UNITS: MDL ppb(v)	Q
56-23-5	Carbon Tetrachloride	14	D
107-06-2	1,2-Dichloroethane	2	U
71-43-2	Benzene	4	J D
540-84-1	Isooctane	2	U
142-82-5	Heptane	2	U
79-01-6	Trichloroethene	340	D
140-88-5	Ethyl Acrylate	2	U
78-87-5	1,2-Dichloropropane	2	U
80-62-6	Methyl Methacrylate	2	U
74-95-3	Dibromomethane	2	U
123-91-1	1,4-Dioxane	2	U
75-27-4	Bromodichloromethane	2	U
10061-01-5	cis-1,3-Dichloropropene	2	U
108-10-1	4-Methyl-2-Pentanone	6	U
108-88-3	Toluene	53	D
111-65-9	Octane	2	U
10061-02-6	trans-1,3-Dichloropropene	2	U
97-63-2	Ethyl Methacrylate	2	U
79-00-5	1,1,2-Trichloroethane	2	U
127-18-4	Tetrachloroethene	2900	D
591-78-6	2-Hexanone	6	U
124-48-1	Dibromochloromethane	2	U
106-93-4	1,2-Dibromoethane	2	U
108-90-7	Chlorobenzene	2	U
630-20-6	1,1,1,2-Tetrachloroethane	2	U
100-41-4	Ethylbenzene	3	J D
1330-20-7	m/p-Xylene	10	J D
95-47-6	o-Xylene	4	J D
100-42-5	Styrene	2	U
75-25-2	Bromoform	2	U
98-82-8	Cumene	2	U
79-34-5	1,1,2,2-Tetrachloroethane	2	U
96-18-4	1,2,3-Trichloropropane	2	U
108-86-1	Bromobenzene	2	U

U = Compound was undetected at the specified limit of quantitation.
B = Compound was found in method blank. D = analysis of diluted sample.
J = Compound was detected, but below the limit of quantitation.
NOTE: Limits of detection were raised due to the high concentration of volatile organic compounds in this sample.

Lancaster Laboratories Analytical Report
2425 New Holland Pike, Lancaster, PA 17603

VOLATILE ORGANICS IN AIR
TEDLAR BAG SAMPLE
ANALYSIS DATA SHEET

Sample No.: S59NW Date Collected: 07/25/02 Date Received: 07/27/02
Lab Sample ID: 3865292 Date Analyzed: 07/28/02 Time Analyzed: 23:00
Injection Volume: 500 cc Nominal Volume: 250 cc Dilution Factor: 12.0
Instrument ID: HP4224 Lab File ID: C:\HPCHEM\1\DATA\JUL28\1301013.D

CAS RN	COMPOUND NAME	CONCENTRATION UNITS: MDL ppb(v)	Q
622-96-8	4-Ethyltoluene	3	J D
108-67-8	1,3,5-Trimethylbenzene	2	U
98-83-9	Alpha Methyl Styrene	2	U
95-63-6	1,2,4-Trimethylbenzene	5	J D
541-73-1	1,3-Dichlorobenzene	6	U
106-46-7	1,4-Dichlorobenzene	6	U
100-44-7	Benzyl chloride	2	U
95-50-1	1,2-Dichlorobenzene	6	U
67-72-1	Hexachloroethane	2	U
120-82-1	1,2,4-Trichlorobenzene	12	U
87-68-3	Hexachlorobutadiene	6	U

U = Compound was undetected at the specified limit of quantitation.
B = Compound was found in method blank. D = analysis of diluted sample.
J = Compound was detected, but below the limit of quantitation.
NOTE: Limits of detection were raised due to the high concentration of volatile organic compounds in this sample.

Lancaster Laboratories Analytical Report
2425 New Holland Pike, Lancaster, PA 17603

Sample Number: AQ 3865293

Collected: 07/25/2002 16:30 by JE

Account: 10160

Submitted: 07/27/2002 10:15
Reported: 08/01/2002 at 11:46

DaimlerChrysler Corporation
PO Box 537933
Livonia MI 48153-7933

SVE40BN Tedlar Bag Sample
Site Code: SC001 RFA#: ET02031
Dayton Thermal/Dayton, OH
S40BN **SDG#: DCK20-05**

CAT No.	Analysis Name	CAS Number	As Received Result	Method Detection Limit	Units	Dilution Factor

Laboratory Chronicle

CAT No.	Analysis Name	Method	Trial#	Analysis Date and Time	Analyst	Dilution Factor
07869	TO 14 VOA Ext. List Tedlar	EPA TO14	1	07/28/2002, 23:43	Matthew S Thomas	67
07869	TO 14 VOA Ext. List Tedlar	EPA TO14	1	07/29/2002 00:36	Matthew S Thomas	10
07870	TO 14 VOA Ext List cont Tedlar	EPA TO14	1	07/28/2002 23:43	Matthew S Thomas	67
07870	TO 14 VOA Ext List cont Tedlar	EPA TO14	1	07/29/2002 00:36	Matthew S Thomas	10

Lancaster Laboratories Analytical Report
2425 New Holland Pike, Lancaster, PA 17603

VOLATILE ORGANICS IN AIR
TEDLAR BAG SAMPLE
TENTATIVELY IDENTIFIED COMPOUNDS

Sample No.: S40BN Date Collected: 07/25/02 Date Received: 07/27/02
Lab Sample ID: 3865293 Date Analyzed: 07/29/02 Time Analyzed: 00:36
Injection Volume: 500 cc Nominal Volume: 250 cc Dilution Factor: 10.0
Instrument ID: HP4224 Lab File ID: C:\HPCHEM\1\DATA\JUL28\1501015.D
UNITS = ppb(v)

CAS RN	COMPOUND NAME	R.T.	ESTIMATED CONCENTRATION	Q
	Unknown C4H8 isomer	6.67	39	J D
78-78-4	Butane, 2-methyl-	8.22	180	J D
67-63-0	Isopropyl Alcohol	10.94	110	J D
107-83-5	Pentane, 2-methyl-	11.32	190	J D
	Unknown aliphatic hydrocarbon	20.48	130	J D
	Unknown aliphatic hydrocarbon	21.67	120	J D
	Unknown aliphatic hydrocarbon	26.50	170	J D
	Unknown aliphatic hydrocarbon	27.46	190	J D
	Unknown aliphatic hydrocarbon	27.58	39	J D
	Unknown siloxane	27.96	54	J D

B = Compound was found in method blank. D = analysis of diluted sample.
J = Estimated concentration assuming identical response factor to that of the internal standard with retention time closest to the TIC.

Lancaster Laboratories Analytical Report
2425 New Holland Pike, Lancaster, PA 17603

VOLATILE ORGANICS IN AIR
TEDLAR BAG SAMPLE
ANALYSIS DATA SHEET

Sample No.: S40BN Date Collected: 07/25/02 Date Received: 07/27/02
Lab Sample ID: 3865293 Date Analyzed: 07/29/02 Time Analyzed: 00:36
Injection Volume: 500 cc Nominal Volume: 250 cc Dilution Factor: 10.0
Instrument ID: HP4224 Lab File ID: C:\HPCHEM\1\DATA\JUL28\1501015.D

CAS RN	COMPOUND NAME	CONCENTRATION UNITS: MDL ppb(v)	Q
115-07-1	Propene	12	D
75-71-8	Dichlorodifluoromethane	2	U
75-45-6	Chlorodifluoromethane	630	D
76-14-2	Freon 114	2	U
74-87-3	Chloromethane	2	U
75-01-4	Vinyl Chloride	2	U
106-99-0	1,3-Butadiene	10	U
74-83-9	Bromomethane	2	U
75-00-3	Chloroethane	2	U
75-43-4	Dichlorofluoromethane	2	U
75-69-4	Trichlorofluoromethane	7	J D
109-66-0	Pentane	56	D
107-02-8	Acrolein	17	D
75-35-4	1,1-Dichloroethene	230	D
76-13-1	Freon 113	25	D
67-64-1	Acetone	88	D
74-88-4	Methyl Iodide	2	U
75-15-0	Carbon Disulfide	30	D
75-05-8	Acetonitrile	5	U
107-05-1	3-Chloropropene	5	U
75-09-2	Methylene Chloride	33	D
75-65-0	tert-Butyl Alcohol	2	U
107-13-1	Acrylonitrile	5	U
156-60-5	trans-1,2-Dichloroethene	37	D
1634-04-4	Methyl t-Butyl Ether	2	U
110-54-3	Hexane	42	D
75-34-3	1,1-Dichloroethane	160	D
108-05-4	Vinyl Acetate	2	U
156-59-2	cis-1,2-Dichloroethene	640	D
78-93-3	2-Butanone	44	D
141-78-6	Ethyl Acetate	2	U
96-33-3	Methyl Acrylate	2	U
67-66-3	Chloroform	2	J D
71-55-6	1,1,1-Trichloroethane	2400	D

U = Compound was undetected at the specified limit of quantitation.
B = Compound was found in method blank. D = analysis of diluted sample.
J = Compound was detected, but below the limit of quantitation.
NOTE: Limits of detection were raised due to the high concentration of volatile organic compounds in this sample.

Lancaster Laboratories Analytical Report
2425 New Holland Pike, Lancaster, PA 17603

VOLATILE ORGANICS IN AIR
TEDLAR BAG SAMPLE
ANALYSIS DATA SHEET

Sample No.: S40BN Date Collected: 07/25/02 Date Received: 07/27/02
Lab Sample ID: 3865293 Date Analyzed: 07/29/02 Time Analyzed: 00:36
Injection Volume: 500 cc Nominal Volume: 250 cc Dilution Factor: 10.0
Instrument ID: HP4224 Lab File ID: C:\HPCHEM\1\DATA\JUL28\1501015.D

CAS RN	COMPOUND NAME	CONCENTRATION UNITS: MDL ppb(v)	Q
56-23-5	Carbon Tetrachloride	2	U
107-06-2	1,2-Dichloroethane	2	U
71-43-2	Benzene	6	J D
540-84-1	Isooctane	2	U
142-82-5	Heptane	3	J D
79-01-6	Trichloroethene	570	D
140-88-5	Ethyl Acrylate	2	U
78-87-5	1,2-Dichloropropane	2	U
80-62-6	Methyl Methacrylate	2	U
74-95-3	Dibromomethane	2	U
123-91-1	1,4-Dioxane	2	U
75-27-4	Bromodichloromethane	2	U
10061-01-5	cis-1,3-Dichloropropene	2	U
108-10-1	4-Methyl-2-Pentanone	5	U
108-88-3	Toluene	68	D
111-65-9	Octane	2	J D
10061-02-6	trans-1,3-Dichloropropene	2	U
97-63-2	Ethyl Methacrylate	2	U
79-00-5	1,1,2-Trichloroethane	2	U
127-18-4	Tetrachloroethene	1700	D
591-78-6	2-Hexanone	5	U
124-48-1	Dibromochloromethane	2	U
106-93-4	1,2-Dibromoethane	2	U
108-90-7	Chlorobenzene	2	U
630-20-6	1,1,1,2-Tetrachloroethane	2	U
100-41-4	Ethylbenzene	7	J D
1330-20-7	m/p-Xylene	11	D
95-47-6	o-Xylene	4	J D
100-42-5	Styrene	3	J D
75-25-2	Bromoform	2	U
98-82-8	Cumene	2	U
79-34-5	1,1,2,2-Tetrachloroethane	2	U
96-18-4	1,2,3-Trichloropropane	2	U
108-86-1	Bromobenzene	2	U

U = Compound was undetected at the specified limit of quantitation.
B = Compound was found in method blank. D = analysis of diluted sample.
J = Compound was detected, but below the limit of quantitation.
NOTE: Limits of detection were raised due to the high concentration of volatile organic compounds in this sample.

Lancaster Laboratories Analytical Report
2425 New Holland Pike, Lancaster, PA 17603

VOLATILE ORGANICS IN AIR
TEDLAR BAG SAMPLE
ANALYSIS DATA SHEET

Sample No.: S40BN Date Collected: 07/25/02 Date Received: 07/27/02
Lab Sample ID: 3865293 Date Analyzed: 07/29/02 Time Analyzed: 00:36
Injection Volume: 500 cc Nominal Volume: 250 cc Dilution Factor: 10.0
Instrument ID: HP4224 Lab File ID: C:\HPCHEM\1\DATA\JUL28\1501015.D

CAS RN	COMPOUND NAME	CONCENTRATION UNITS: MDL ppb(v)	Q
622-96-8	4-Ethyltoluene	3	J D
108-67-8	1,3,5-Trimethylbenzene	2	J D
98-83-9	Alpha Methyl Styrene	2	U
95-63-6	1,2,4-Trimethylbenzene	6	J D
541-73-1	1,3-Dichlorobenzene	5	U
106-46-7	1,4-Dichlorobenzene	12	D
100-44-7	Benzyl chloride	2	U
95-50-1	1,2-Dichlorobenzene	5	U
67-72-1	Hexachloroethane	2	U
120-82-1	1,2,4-Trichlorobenzene	10	U
87-68-3	Hexachlorobutadiene	5	U

U = Compound was undetected at the specified limit of quantitation.
B = Compound was found in method blank. D = analysis of diluted sample.
J = Compound was detected, but below the limit of quantitation.
NOTE: Limits of detection were raised due to the high concentration of volatile organic compounds in this sample.

Lancaster Laboratories Analytical Report
2425 New Holland Pike, Lancaster, PA 17603

Sample Number: AQ 3865294

Collected: 07/25/2002 18:40 by JE

Account: 10160

Submitted: 07/27/2002 10:15
Reported: 08/01/2002 at 11:46

DaimlerChrysler Corporation
PO Box 537933
Livonia MI 48153-7933

SVE59INE Tedlar Bag Sample
Site Code: SC001 RFA#: ET02031
Dayton Thermal/Dayton, OH
59INE **SDG#: DCK20-06**

CAT No.	Analysis Name	CAS Number	As Received Result	Method Detection Limit	Units	Dilution Factor

Laboratory Chronicle

CAT No.	Analysis Name	Method	Trial#	Analysis Date and Time	Analyst	Dilution Factor
07869	TO 14 VOA Ext. List Tedlar	EPA TO14	1	07/29/2002 10:10	Matthew S Thomas	1
07870	TO 14 VOA Ext List cont Tedlar	EPA TO14	1	07/29/2002 01:19	Matthew S Thomas	10
07870	TO 14 VOA Ext List cont Tedlar	EPA TO14	1	07/29/2002 10:10	Matthew S Thomas	1

Lancaster Laboratories Analytical Report
2425 New Holland Pike, Lancaster, PA 17603

VOLATILE ORGANICS IN AIR
TEDLAR BAG SAMPLE
TENTATIVELY IDENTIFIED COMPOUNDS

Sample No.: 59INE Date Collected: 07/25/02 Date Received: 07/27/02
Lab Sample ID: 3865294 Date Analyzed: 07/29/02 Time Analyzed: 10:10
Injection Volume: 250 cc Nominal Volume: 250 cc Dilution Factor: 1.0
Instrument ID: HP4224 Lab File ID: C:\HPCHEM\1\DATA\JUL28\2101021.D
UNITS = ppb(v)

CAS RN	COMPOUND NAME	R.T.	ESTIMATED CONCENTRATION	Q
75-68-3	Ethane, 1-chloro-1,1-difluoro-	6.23	7	J
75-07-0	Acetaldehyde	7.13	4	J
78-78-4	Butane, 2-methyl-	8.10	3	J
67-63-0	Isopropyl Alcohol	10.81	9	J
	Unknown siloxane	24.44	5	J
127-19-5	Acetamide, N,N-dimethyl-	24.72	10	J
	Unknown	25.71	4	J
	Unknown aliphatic hydrocarbon	26.48	8	J
104-76-7	1-Hexanol, 2-ethyl-	27.02	3	J
	Unknown siloxane	27.94	6	J

B = Compound was found in method blank. D = analysis of diluted sample.
J = Estimated concentration assuming identical response factor to that of the internal standard with retention time closest to the TIC.

Lancaster Laboratories Analytical Report
2425 New Holland Pike, Lancaster, PA 17603

VOLATILE ORGANICS IN AIR
TEDLAR BAG SAMPLE
ANALYSIS DATA SHEET

Sample No.: 59INE Date Collected: 07/25/02 Date Received: 07/27/02
Lab Sample ID: 3865294 Date Analyzed: 07/29/02 Time Analyzed: 10:10
Injection Volume: 250 cc Nominal Volume: 250 cc Dilution Factor: 1.0
Instrument ID: HP4224 Lab File ID: C:\HPCHEM\1\DATA\JUL28\2101021.D

CAS RN	COMPOUND NAME	CONCENTRATION UNITS: MDL ppb(v)	Q
115-07-1	Propene	0.4	J
75-71-8	Dichlorodifluoromethane	1	
75-45-6	Chlorodifluoromethane	15	
76-14-2	Freon 114	0.2	U
74-87-3	Chloromethane	0.2	U
75-01-4	Vinyl Chloride	0.2	U
106-99-0	1,3-Butadiene	1	U
74-83-9	Bromomethane	0.2	U
75-00-3	Chloroethane	0.2	U
75-43-4	Dichlorofluoromethane	0.2	U
75-69-4	Trichlorofluoromethane	3	
109-66-0	Pentane	3	
107-02-8	Acrolein	2	
75-35-4	1,1-Dichloroethene	2	
76-13-1	Freon 113	0.5	U
67-64-1	Acetone	27	
74-88-4	Methyl Iodide	0.2	U
75-15-0	Carbon Disulfide	12	
75-05-8	Acetonitrile	6	
107-05-1	3-Chloropropene	0.5	U
75-09-2	Methylene Chloride	3	
75-65-0	tert-Butyl Alcohol	0.2	U
107-13-1	Acrylonitrile	0.5	U
156-60-5	trans-1,2-Dichloroethene	0.4	J
1634-04-4	Methyl t-Butyl Ether	0.2	U
110-54-3	Hexane	2	
75-34-3	1,1-Dichloroethane	3	
108-05-4	Vinyl Acetate	0.2	U
156-59-2	cis-1,2-Dichloroethene	9	
78-93-3	2-Butanone	7	
141-78-6	Ethyl Acetate	0.2	U
96-33-3	Methyl Acrylate	0.2	U
67-66-3	Chloroform	0.5	J
71-55-6	1,1,1-Trichloroethane	68	

U = Compound was undetected at the specified limit of quantitation.
B = Compound was found in method blank. D = analysis of diluted sample.
J = Compound was detected, but below the limit of quantitation.

Lancaster Laboratories Analytical Report
2425 New Holland Pike, Lancaster, PA 17603

VOLATILE ORGANICS IN AIR
TEDLAR BAG SAMPLE
ANALYSIS DATA SHEET

Sample No.: 59INE Date Collected: 07/25/02 Date Received: 07/27/02
Lab Sample ID: 3865294 Date Analyzed: 07/29/02 Time Analyzed: 10:10
Injection Volume: 250 cc Nominal Volume: 250 cc Dilution Factor: 1.0
Instrument ID: HP4224 Lab File ID: C:\HPCHEM\1\DATA\JUL28\2101021.D

CAS RN	COMPOUND NAME	CONCENTRATION UNITS: MDL ppb(v)	Q
56-23-5	Carbon Tetrachloride	0.2	U
107-06-2	1,2-Dichloroethane	0.2	U
71-43-2	Benzene	2	
540-84-1	Isooctane	0.8	J
142-82-5	Heptane	1	
79-01-6	Trichloroethene	150	D
140-88-5	Ethyl Acrylate	0.2	U
78-87-5	1,2-Dichloropropane	0.2	U
80-62-6	Methyl Methacrylate	0.2	U
74-95-3	Dibromomethane	0.2	U
123-91-1	1,4-Dioxane	0.2	U
75-27-4	Bromodichloromethane	0.2	U
10061-01-5	cis-1,3-Dichloropropene	0.2	U
108-10-1	4-Methyl-2-Pentanone	0.7	J
108-88-3	Toluene	20	
111-65-9	Octane	1	
10061-02-6	trans-1,3-Dichloropropene	0.2	U
97-63-2	Ethyl Methacrylate	0.2	U
79-00-5	1,1,2-Trichloroethane	0.2	U
127-18-4	Tetrachloroethene	220	D
591-78-6	2-Hexanone	1	
124-48-1	Dibromochloromethane	0.2	U
106-93-4	1,2-Dibromoethane	0.2	U
108-90-7	Chlorobenzene	0.2	U
630-20-6	1,1,1,2-Tetrachloroethane	0.2	U
100-41-4	Ethylbenzene	4	
1330-20-7	m/p-Xylene	16	
95-47-6	o-Xylene	7	
100-42-5	Styrene	1	
75-25-2	Bromoform	0.2	U
98-82-8	Cumene	0.4	J
79-34-5	1,1,2,2-Tetrachloroethane	0.2	U
96-18-4	1,2,3-Trichloropropane	0.2	U
108-86-1	Bromobenzene	0.2	U

U = Compound was undetected at the specified limit of quantitation.
B = Compound was found in method blank. D = analysis of diluted sample.
J = Compound was detected, but below the limit of quantitation.

Lancaster Laboratories Analytical Report
2425 New Holland Pike, Lancaster, PA 17603

VOLATILE ORGANICS IN AIR
TEDLAR BAG SAMPLE
ANALYSIS DATA SHEET

Sample No.: 59INE Date Collected: 07/25/02 Date Received: 07/27/02
Lab Sample ID: 3865294 Date Analyzed: 07/29/02 Time Analyzed: 10:10
Injection Volume: 250 cc Nominal Volume: 250 cc Dilution Factor: 1.0
Instrument ID: HP4224 Lab File ID: C:\HPCHEM\1\DATA\JUL28\2101021.D

CAS RN	COMPOUND NAME	CONCENTRATION UNITS: MDL ppb(v)	Q
622-96-8	4-Ethyltoluene	5	
108-67-8	1,3,5-Trimethylbenzene	2	
98-83-9	Alpha Methyl Styrene	0.2	U
95-63-6	1,2,4-Trimethylbenzene	6	
541-73-1	1,3-Dichlorobenzene	0.5	U
106-46-7	1,4-Dichlorobenzene	0.5	U
100-44-7	Benzyl chloride	0.2	U
95-50-1	1,2-Dichlorobenzene	0.5	U
67-72-1	Hexachloroethane	0.2	U
120-82-1	1,2,4-Trichlorobenzene	1	U
87-68-3	Hexachlorobutadiene	0.5	U

U = Compound was undetected at the specified limit of quantitation.
B = Compound was found in method blank. D = analysis of diluted sample.
J = Compound was detected, but below the limit of quantitation.

Lancaster Laboratories Analytical Report
2425 New Holland Pike, Lancaster, PA 17603

Sample Number: AQ 3865295

Collected: 07/26/2002 11:40 by JE

Account: 10160

Submitted: 07/27/2002 10:15
Reported: 08/01/2002 at 11:47

DaimlerChrysler Corporation
PO Box 537933
Livonia MI 48153-7933

SVE59INW Tedlar Bag Sample
Site Code: SC001 RFA#: ET02031
Dayton Thermal/Dayton, OH
59INW **SDG#: DCK20-07***

CAT No.	Analysis Name	CAS Number	As Received Result	Method Detection Limit	Units	Dilution Factor

Laboratory Chronicle

CAT No.	Analysis Name	Method	Trial#	Analysis Date and Time	Analyst	Dilution Factor
07869	TO 14 VOA Ext. List Tedlar	EPA TO14	1	07/29/2002 02:46	Matthew S Thomas	67
07869	TO 14 VOA Ext. List Tedlar	EPA TO14	1	07/29/2002 03:32	Matthew S Thomas	10
07870	TO 14 VOA Ext List cont Tedlar	EPA TO14	1	07/29/2002 02:46	Matthew S Thomas	67
07870	TO 14 VOA Ext List cont Tedlar	EPA TO14	1	07/29/2002 03:32	Matthew S Thomas	10

Lancaster Laboratories Analytical Report
2425 New Holland Pike, Lancaster, PA 17603

VOLATILE ORGANICS IN AIR
TEDLAR BAG SAMPLE
TENTATIVELY IDENTIFIED COMPOUNDS

Sample No.: 59INW Date Collected: 07/26/02 Date Received: 07/27/02
Lab Sample ID: 3865295 Date Analyzed: 07/29/02 Time Analyzed: 03:32
Injection Volume: 500 cc Nominal Volume: 250 cc Dilution Factor: 10.0
Instrument ID: HP4224 Lab File ID: C:\HPCHEM\1\DATA\JUL28\1901019.D
UNITS = ppb(v)

CAS RN	COMPOUND NAME	R.T.	ESTIMATED CONCENTRATION	Q
78-78-4	Butane, 2-methyl-	8.11	63	J D
67-63-0	Isopropyl Alcohol	10.83	57	J D
107-83-5	Pentane, 2-methyl-	11.23	20	J D
127-19-5	Acetamide, N,N-dimethyl-	24.83	52	J D
	Unknown aliphatic hydrocarbon	26.50	68	J D
104-76-7	1-Hexanol, 2-ethyl-	27.03	25	J D
	Unknown aliphatic hydrocarbon	27.45	39	J D
	Unknown aliphatic hydrocarbon	27.58	25	J D
	Unknown siloxane	27.95	80	J D
	Unknown	31.36	29	J D

B = Compound was found in method blank. D = analysis of diluted sample.
J = Estimated concentration assuming identical response factor to that of the internal standard with retention time closest to the TIC.

Lancaster Laboratories Analytical Report
2425 New Holland Pike, Lancaster, PA 17603

VOLATILE ORGANICS IN AIR
TEDLAR BAG SAMPLE
ANALYSIS DATA SHEET

Sample No.: 59INW Date Collected: 07/26/02 Date Received: 07/27/02
Lab Sample ID: 3865295 Date Analyzed: 07/29/02 Time Analyzed: 03:32
Injection Volume: 500 cc Nominal Volume: 250 cc Dilution Factor: 10.0
Instrument ID: HP4224 Lab File ID: C:\HPCHEM\1\DATA\JUL28\1901019.D

CAS RN	COMPOUND NAME	CONCENTRATION UNITS: MDL ppb(v)	Q
115-07-1	Propene	15	D
75-71-8	Dichlorodifluoromethane	3	J D
75-45-6	Chlorodifluoromethane	64	D
76-14-2	Freon 114	2	U
74-87-3	Chloromethane	2	U
75-01-4	Vinyl Chloride	2	U
106-99-0	1,3-Butadiene	10	U
74-83-9	Bromomethane	2	U
75-00-3	Chloroethane	20	D
75-43-4	Dichlorofluoromethane	2	U
75-69-4	Trichlorofluoromethane	7	J D
109-66-0	Pentane	19	D
107-02-8	Acrolein	13	D
75-35-4	1,1-Dichloroethene	150	D
76-13-1	Freon 113	7	J D
67-64-1	Acetone	100	D
74-88-4	Methyl Iodide	2	U
75-15-0	Carbon Disulfide	32	D
75-05-8	Acetonitrile	5	U
107-05-1	3-Chloropropene	5	U
75-09-2	Methylene Chloride	40	D
75-65-0	tert-Butyl Alcohol	2	U
107-13-1	Acrylonitrile	5	U
156-60-5	trans-1,2-Dichloroethene	3	J D
1634-04-4	Methyl t-Butyl Ether	2	U
110-54-3	Hexane	10	D
75-34-3	1,1-Dichloroethane	53	D
108-05-4	Vinyl Acetate	2	U
156-59-2	cis-1,2-Dichloroethene	150	D
78-93-3	2-Butanone	42	D
141-78-6	Ethyl Acetate	2	U
96-33-3	Methyl Acrylate	2	U
67-66-3	Chloroform	2	U
71-55-6	1,1,1-Trichloroethane	1200	D

U = Compound was undetected at the specified limit of quantitation.
B = Compound was found in method blank. D = analysis of diluted sample.
J = Compound was detected, but below the limit of quantitation.
NOTE: Limits of detection were raised due to the high concentration of volatile organic compounds in this sample.

Lancaster Laboratories Analytical Report
2425 New Holland Pike, Lancaster, PA 17603

VOLATILE ORGANICS IN AIR
TEDLAR BAG SAMPLE
ANALYSIS DATA SHEET

Sample No.: 59INW Date Collected: 07/26/02 Date Received: 07/27/02
Lab Sample ID: 3865295 Date Analyzed: 07/29/02 Time Analyzed: 03:32
Injection Volume: 500 cc Nominal Volume: 250 cc Dilution Factor: 10.0
Instrument ID: HP4224 Lab File ID: C:\HPCHEM\1\DATA\JUL28\1901019.D

CAS RN	COMPOUND NAME	CONCENTRATION UNITS: MDL ppb(v)	Q
56-23-5	Carbon Tetrachloride	2	U
107-06-2	1,2-Dichloroethane	2	U
71-43-2	Benzene	5	J D
540-84-1	Isooctane	2	U
142-82-5	Heptane	2	J D
79-01-6	Trichloroethene	390	D
140-88-5	Ethyl Acrylate	2	U
78-87-5	1,2-Dichloropropane	2	U
80-62-6	Methyl Methacrylate	2	U
74-95-3	Dibromomethane	2	U
123-91-1	1,4-Dioxane	2	U
75-27-4	Bromodichloromethane	2	U
10061-01-5	cis-1,3-Dichloropropene	2	U
108-10-1	4-Methyl-2-Pentanone	5	U
108-88-3	Toluene	78	D
111-65-9	Octane	3	J D
10061-02-6	trans-1,3-Dichloropropene	2	U
97-63-2	Ethyl Methacrylate	2	U
79-00-5	1,1,2-Trichloroethane	2	U
127-18-4	Tetrachloroethene	2700	D
591-78-6	2-Hexanone	5	U
124-48-1	Dibromochloromethane	2	U
106-93-4	1,2-Dibromoethane	2	U
108-90-7	Chlorobenzene	2	U
630-20-6	1,1,1,2-Tetrachloroethane	2	U
100-41-4	Ethylbenzene	6	J D
1330-20-7	m/p-Xylene	20	D
95-47-6	o-Xylene	8	J D
100-42-5	Styrene	4	J D
75-25-2	Bromoform	2	U
98-82-8	Cumene	2	U
79-34-5	1,1,2,2-Tetrachloroethane	2	U
96-18-4	1,2,3-Trichloropropane	2	U
108-86-1	Bromobenzene	2	U

U = Compound was undetected at the specified limit of quantitation.
B = Compound was found in method blank. D = analysis of diluted sample.
J = Compound was detected, but below the limit of quantitation.
NOTE: Limits of detection were raised due to the high concentration of volatile organic compounds in this sample.

Lancaster Laboratories Analytical Report
2425 New Holland Pike, Lancaster, PA 17603

VOLATILE ORGANICS IN AIR
TEDLAR BAG SAMPLE
ANALYSIS DATA SHEET

Sample No.: 59INW Date Collected: 07/26/02 Date Received: 07/27/02
Lab Sample ID: 3865295 Date Analyzed: 07/29/02 Time Analyzed: 03:32
Injection Volume: 500 cc Nominal Volume: 250 cc Dilution Factor: 10.0
Instrument ID: HP4224 Lab File ID: C:\HPCHEM\1\DATA\JUL28\1901019.D

CAS RN	COMPOUND NAME	CONCENTRATION UNITS: MDL ppb(v)	Q
622-96-8	4-Ethyltoluene	5	J D
108-67-8	1,3,5-Trimethylbenzene	3	J D
98-83-9	Alpha Methyl Styrene	2	U
95-63-6	1,2,4-Trimethylbenzene	8	J D
541-73-1	1,3-Dichlorobenzene	5	U
106-46-7	1,4-Dichlorobenzene	5	U
100-44-7	Benzyl chloride	2	U
95-50-1	1,2-Dichlorobenzene	5	U
67-72-1	Hexachloroethane	2	U
120-82-1	1,2,4-Trichlorobenzene	10	U
87-68-3	Hexachlorobutadiene	5	U

U = Compound was undetected at the specified limit of quantitation.
B = Compound was found in method blank. D = analysis of diluted sample.
J = Compound was detected, but below the limit of quantitation.
NOTE: Limits of detection were raised due to the high concentration of volatile organic compounds in this sample.

Lancaster Laboratories Analytical Report
2425 New Holland Pike, Lancaster, PA 17603

Lancaster Laboratories

2425 New Holland Pike, PO Box 12425, Lancaster, PA 17605-2425 • 717-656-2300 Fax: 717-656-2681 • www.lancasterlabs.com

Analysis Report

ANALYTICAL RESULTS

Prepared for:

DaimlerChrysler Corporation
PO Box 537933
Livonia MI 48153-7933

248-576-5741

Prepared by:

Lancaster Laboratories
2425 New Holland Pike
Lancaster, PA 17605-2425

SAMPLE GROUP

The sample group for this submittal is 903560. Samples arrived at the laboratory on Wednesday, July 14, 2004. The PO# for this group is N99C403749-B.

Client Description	Lancaster Labs Number
GW-071304-1-ASINF-0 Grab Water Sample	4310278
Trip_Blank Water Sample	4310279

ELECTRONIC COPY TO	Earth Tech	Attn: Ms. Lisa Smith
ELECTRONIC COPY TO	Earth Tech	Attn: Mr. Rob Stenson
1 COPY TO	LLI	Attn: Ms. Kathy Klinefelter

Lancaster Laboratories

Analysis Report

2425 New Holland Pike, PO Box 12425, Lancaster, PA 17605-2425 • 717-656-2300 Fax 717-656-2681 • www.lancasterlabs.com

Questions? Contact your Client Services Representative
Katherine A Klinefelter at (717) 656-2300.

Respectfully Submitted,

Robin C. Runkle
Senior Chemist

Lancaster Laboratories

Analysis Report

2425 New Holland Pike, PO Box 12425, Lancaster, PA 17605-2425 • 717-656-2300 Fax: 717-656-2681 • www.lancasterlabs.com

Lancaster Laboratories Sample No. WW 4310278

GW-071304-1-ASINF-0 Grab Water Sample
Site Code: SC001 RFA# ET04051
Dayton Thermal/Dayton, OH
Collected:07/13/2004 13:10 by JRD

Account Number: 10160

Submitted: 07/14/2004 08:40
Reported: 07/21/2004 at 01:04
Discard: 09/20/2004

DaimlerChrysler Corporation
PO Box 537933
Livonia MI 48153-7933

ASINF SDG#: DCQ11-01

CAT No.	Analysis Name	CAS Number	As Received Result		As Received Method Detection Limit	Units	Dilution Factor
06291	TCL by 8260 (water)						
05385	Chloromethane	74-87-3	N.D.		2.	ug/l	2
05386	Vinyl Chloride	75-01-4	4.	J	2.	ug/l	2
05387	Bromomethane	74-83-9	N.D.		2.	ug/l	2
05388	Chloroethane	75-00-3	N.D.		2.	ug/l	2
05390	1,1-Dichloroethene	75-35-4	76.		2.	ug/l	2
05391	Methylene Chloride	75-09-2	N.D.		4.	ug/l	2
05392	trans-1,2-Dichloroethene	156-60-5	9.	J	2.	ug/l	2
05393	1,1-Dichloroethane	75-34-3	22.		2.	ug/l	2
05395	cis-1,2-Dichloroethene	156-59-2	240.		2.	ug/l	2
05396	Chloroform	67-66-3	N.D.		2.	ug/l	2
05398	1,1,1-Trichloroethane	71-55-6	220.		2.	ug/l	2
05399	Carbon Tetrachloride	56-23-5	34.		2.	ug/l	2
05401	Benzene	71-43-2	N.D.		1.	ug/l	2
05402	1,2-Dichloroethane	107-06-2	N.D.		2.	ug/l	2
05403	Trichloroethene	79-01-6	1,900.		20.	ug/l	20
05404	1,2-Dichloropropane	78-87-5	N.D.		2.	ug/l	2
05406	Bromodichloromethane	75-27-4	N.D.		2.	ug/l	2
05407	Toluene	108-88-3	N.D.		1.	ug/l	2
05408	1,1,2-Trichloroethane	79-00-5	N.D.		2.	ug/l	2
05409	Tetrachloroethene	127-18-4	4.	J	2.	ug/l	2
05411	Dibromochloromethane	124-48-1	N.D.		2.	ug/l	2
05413	Chlorobenzene	108-90-7	N.D.		2.	ug/l	2
05415	Ethylbenzene	100-41-4	N.D.		2.	ug/l	2
05418	Styrene	100-42-5	N.D.		2.	ug/l	2
05419	Bromoform	75-25-2	N.D.		2.	ug/l	2
05421	1,1,2,2-Tetrachloroethane	79-34-5	N.D.		2.	ug/l	2
06302	Acetone	67-64-1	N.D.		12.	ug/l	2
06303	Carbon Disulfide	75-15-0	N.D.		2.	ug/l	2
06305	2-Butanone	78-93-3	N.D.		6.	ug/l	2
06306	trans-1,3-Dichloropropene	10061-02-6	N.D.		2.	ug/l	2
06307	cis-1,3-Dichloropropene	10061-01-5	N.D.		2.	ug/l	2
06308	4-Methyl-2-pentanone	108-10-1	N.D.		6.	ug/l	2
06309	2-Hexanone	591-78-6	N.D.		6.	ug/l	2
06310	Xylene (Total)	1330-20-7	N.D.		2.	ug/l	2

Due to the level of trichloroethene, the reporting limits for all GC/MS volatile compounds were raised.

Lancaster Laboratories

Analysis Report

2425 New Holland Pike, PO Box 12425, Lancaster, PA 17605-2425 • 717-656-2300 Fax: 717-656-2681 • www.lancasterlabs.com

Lancaster Laboratories Sample No. WW 4310278

GW-071304-1-ASINF-0 Grab Water Sample
Site Code: SC001 RFA# ET04051
Dayton Thermal/Dayton, OH
Collected:07/13/2004 13:10 by JRD

Account Number: 10160

Submitted: 07/14/2004 08:40
Reported: 07/21/2004 at 01:04
Discard: 09/20/2004

DaimlerChrysler Corporation
PO Box 537933
Livonia MI 48153-7933

ASINF SDG#: DCQ11-01

Laboratory Chronicle

CAT No.	Analysis Name	Method	Trial#	Analysis Date and Time	Analyst	Dilution Factor
06291	TCL by 8260 (water)	SW-846 8260B	1	07/15/2004 16:17	Joshua P Schaeffer	2
06291	TCL by 8260 (water)	SW-846 8260B	1	07/15/2004 16:41	Joshua P Schaeffer	20
01163	GC/MS VOA Water Prep	SW-846 5030B	1	07/15/2004 16:17	Joshua P Schaeffer	n.a.

Lancaster Laboratories

Analysis Report

2425 New Holland Pike, PO Box 12425, Lancaster, PA 17605-2425 • 717-656-2300 Fax: 717-656-2681 • www.lancasterlabs.com

Lancaster Laboratories Sample No. WW 4310279

Trip_Blank Water Sample
Site Code: SC001 RFA# ET04051
Dayton Thermal/Dayton, OH
Collected: n.a.

Account Number: 10160

Submitted: 07/14/2004 08:40
Reported: 07/21/2004 at 01:04
Discard: 09/20/2004

DaimlerChrysler Corporation
PO Box 537933
Livonia MI 48153-7933

ASFTB SDG#: DCQ11-02TB*

CAT No.	Analysis Name	CAS Number	As Received Result	As Received Method Detection Limit	Units	Dilution Factor
06291	TCL by 8260 (water)					
05385	Chloromethane	74-87-3	N.D.	1.	ug/l	1
05386	Vinyl Chloride	75-01-4	N.D.	1.	ug/l	1
05387	Bromomethane	74-83-9	N.D.	1.	ug/l	1
05388	Chloroethane	75-00-3	N.D.	1.	ug/l	1
05390	1,1-Dichloroethene	75-35-4	N.D.	0.8	ug/l	1
05391	Methylene Chloride	75-09-2	N.D.	2.	ug/l	1
05392	trans-1,2-Dichloroethene	156-60-5	N.D.	0.8	ug/l	1
05393	1,1-Dichloroethane	75-34-3	N.D.	1.	ug/l	1
05395	cis-1,2-Dichloroethene	156-59-2	N.D.	0.8	ug/l	1
05396	Chloroform	67-66-3	N.D.	0.8	ug/l	1
05398	1,1,1-Trichloroethane	71-55-6	N.D.	0.8	ug/l	1
05399	Carbon Tetrachloride	56-23-5	N.D.	1.	ug/l	1
05401	Benzene	71-43-2	N.D.	0.5	ug/l	1
05402	1,2-Dichloroethane	107-06-2	N.D.	1.	ug/l	1
05403	Trichloroethene	79-01-6	N.D.	1.	ug/l	1
05404	1,2-Dichloropropane	78-87-5	N.D.	1.	ug/l	1
05406	Bromodichloromethane	75-27-4	N.D.	1.	ug/l	1
05407	Toluene	108-88-3	N.D.	0.7	ug/l	1
05408	1,1,2-Trichloroethane	79-00-5	N.D.	0.8	ug/l	1
05409	Tetrachloroethene	127-18-4	N.D.	0.8	ug/l	1
05411	Dibromochloromethane	124-48-1	N.D.	1.	ug/l	1
05413	Chlorobenzene	108-90-7	N.D.	0.8	ug/l	1
05415	Ethylbenzene	100-41-4	N.D.	0.8	ug/l	1
05418	Styrene	100-42-5	N.D.	1.	ug/l	1
05419	Bromoform	75-25-2	N.D.	1.	ug/l	1
05421	1,1,2,2-Tetrachloroethane	79-34-5	N.D.	1.	ug/l	1
06302	Acetone	67-64-1	N.D.	6.	ug/l	1
06303	Carbon Disulfide	75-15-0	N.D.	1.	ug/l	1
06305	2-Butanone	78-93-3	N.D.	3.	ug/l	1
06306	trans-1,3-Dichloropropene	10061-02-6	N.D.	1.	ug/l	1
06307	cis-1,3-Dichloropropene	10061-01-5	N.D.	1.	ug/l	1
06308	4-Methyl-2-pentanone	108-10-1	N.D.	3.	ug/l	1
06309	2-Hexanone	591-78-6	N.D.	3.	ug/l	1
06310	Xylene (Total)	1330-20-7	N.D.	0.8	ug/l	1

Lancaster Laboratories

2425 New Holland Pike, PO Box 12425, Lancaster, PA 17605-2425 • 717-656-2300 Fax: 717-656-2681 • www.lancasterlabs.com

Analysis Report

Lancaster Laboratories Sample No. WW 4310279

Trip_Blank Water Sample
Site Code: SC001 RFA# ET04051
Dayton Thermal/Dayton, OH
Collected: n.a.

Account Number: 10160

Submitted: 07/14/2004 08:40
Reported: 07/21/2004 at 01:04
Discard: 09/20/2004

DaimlerChrysler Corporation
PO Box 537933
Livonia MI 48153-7933

ASFTB SDG#: DCQ11-02TB*

Laboratory Chronicle

CAT No.	Analysis Name	Method	Trial#	Analysis Date and Time	Analyst	Dilution Factor
06291	TCL by 8260 (water)	SW-846 8260B	1	07/15/2004 13:52	Joshua P Schaeffer	1
01163	GC/MS VOA Water Prep	SW-846 5030B	1	07/15/2004 13:52	Joshua P Schaeffer	n.a.

Lancaster Laboratories

2425 New Holland Pike, PO Box 12425, Lancaster, PA 17605-2425 • 717-656-2300 Fax. 717-656-2681 • www.lancasterlabs.com

Analysis Report

Quality Control Summary

Client Name: DaimlerChrysler Corporation
Reported: 07/21/04 at 01:05 AM

Group Number: 903560

Matrix QC may not be reported if site-specific QC samples were not submitted. In these situations, to demonstrate precision and accuracy at a batch level, a LCS/LCSD was performed, unless otherwise specified in the method.

Laboratory Compliance Quality Control

Analysis Name	Blank Result	Blank MDL	Report Units	LCS %REC	LCSD %REC	LCS/LCSD Limits	RPD	RPD Max
Batch number: N041971AB	Sample number(s): 4310278-4310279							
Chloromethane	N.D.	1.	ug/l	110	112	69-136	1	30
Vinyl Chloride	N.D.	1.	ug/l	110	112	71-129	2	30
Bromomethane	N.D.	1.	ug/l	100	103	46-138	2	30
Chloroethane	N.D.	1.	ug/l	107	110	59-133	3	30
1,1-Dichloroethene	N.D.	0.8	ug/l	107	109	79-130	1	30
Methylene Chloride	N.D.	2.	ug/l	107	107	80-128	0	30
trans-1,2-Dichloroethene	N.D.	0.8	ug/l	102	103	81-124	1	30
1,1-Dichloroethane	N.D.	1.	ug/l	107	106	83-127	1	30
cis-1,2-Dichloroethene	N.D.	0.8	ug/l	102	105	84-117	3	30
Chloroform	N.D.	0.8	ug/l	104	104	86-124	0	30
1,1,1-Trichloroethane	N.D.	0.8	ug/l	104	105	83-127	1	30
Carbon Tetrachloride	N.D.	1.	ug/l	103	105	77-130	2	30
Benzene	N.D.	0.5	ug/l	105	105	85-117	0	30
1,2-Dichloroethane	N.D.	1.	ug/l	102	101	77-132	1	30
Trichloroethene	N.D.	1.	ug/l	105	104	87-117	0	30
1,2-Dichloropropane	N.D.	1.	ug/l	105	106	80-117	1	30
Bromodichloromethane	N.D.	1.	ug/l	101	101	83-121	0	30
Toluene	N.D.	0.7	ug/l	98	100	85-115	3	30
1,1,2-Trichloroethane	N.D.	0.8	ug/l	98	98	86-113	1	30
Tetrachloroethene	N.D.	0.8	ug/l	97	100	82-126	2	30
Dibromochloromethane	N.D.	1.	ug/l	95	95	78-119	0	30
Chlorobenzene	N.D.	0.8	ug/l	98	100	85-115	1	30
Ethylbenzene	N.D.	0.8	ug/l	98	100	82-119	1	30
Styrene	N.D.	1.	ug/l	94	96	84-117	1	30
Bromoform	N.D.	1.	ug/l	89	90	69-118	1	30
1,1,2,2-Tetrachloroethane	N.D.	1.	ug/l	93	91	72-119	3	30
Acetone	N.D.	6.	ug/l	117	119	22-179	1	30
Carbon Disulfide	N.D.	1.	ug/l	106	109	73-143	4	30
2-Butanone	N.D.	3.	ug/l	107	107	45-154	0	30
trans-1,3-Dichloropropene	N.D.	1.	ug/l	96	96	79-114	0	30
cis-1,3-Dichloropropene	N.D.	1.	ug/l	103	104	78-114	1	30
4-Methyl-2-pentanone	N.D.	3.	ug/l	88	88	65-125	0	30
2-Hexanone	N.D.	3.	ug/l	91	91	47-150	0	30
Xylene (Total)	N.D.	0.8	ug/l	98	99	84-120	2	30

Sample Matrix Quality Control

Analysis Name	MS %REC	MSD %REC	MS/MSD Limits	RPD	RPD MAX	BKG Conc	DUP Conc	DUP RPD	Dup RPD Max
Batch number: N041971AB	Sample number(s): 4310278-4310279								

*- Outside of specification
(1) The result for one or both determinations was less than five times the LOQ.
(2) The background result was more than four times the spike added.

Lancaster Laboratories

2425 New Holland Pike, PO Box 12425, Lancaster, PA 17605-2425 • 717-656-2300 Fax: 717-656-2681 • www.lancasterlabs.com

Analysis Report

Quality Control Summary

Client Name: DaimlerChrysler Corporation
Reported: 07/21/04 at 01:05 AM

Group Number: 903560

Sample Matrix Quality Control

Analysis Name	MS %REC	MSD %REC	MS/MSD Limits	RPD	RPD MAX	BKG Conc	DUP Conc	DUP RPD	Dup RPD Max
Chloromethane	115		70-148						
Vinyl Chloride	116		70-151						
Bromomethane	108		52-140						
Chloroethane	112		63-142						
1,1-Dichloroethene	113		78-146						
Methylene Chloride	103		79-133						
trans-1,2-Dichloroethene	106		82-133						
1,1-Dichloroethane	109		85-135						
cis-1,2-Dichloroethene	104		83-126						
Chloroform	107		82-131						
1,1,1-Trichloroethane	107		82-135						
Carbon Tetrachloride	108		73-144						
Benzene	107		83-128						
1,2-Dichloroethane	101		73-136						
Trichloroethene	109		75-135						
1,2-Dichloropropane	106		81-121						
Bromodichloromethane	101		83-121						
Toluene	105		83-127						
1,1,2-Trichloroethane	99		77-125						
Tetrachloroethene	106		75-143						
Dibromochloromethane	98		73-119						
Chlorobenzene	105		83-120						
Ethylbenzene	105		82-129						
Styrene	101		76-126						
Bromoform	91		64-119						
1,1,2,2-Tetrachloroethane	94		69-121						
Acetone	58		12-153						
Carbon Disulfide	110		77-155						
2-Butanone	72		42-140						
trans-1,3-Dichloropropene	99		75-117						
cis-1,3-Dichloropropene	103		76-117						
4-Methyl-2-pentanone	85		61-126						
2-Hexanone	78		44-140						
Xylene (Total)	105		82-130						

Surrogate Quality Control

Analysis Name: TCL by 8260 (water)
Batch number: N041971AB

	Dibromofluoromethane	1,2-Dichloroethane-d4	Toluene-d8	4-Bromofluorobenzene
4310278	104	104	109	103
4310279	104	102	109	105
Blank	104	104	110	104
LCS	104	107	105	107
LCSD	104	105	106	109
MS	103	102	108	107
Limits:	81-120	82-112	85-112	83-113

*- Outside of specification
(1) The result for one or both determinations was less than five times the LOQ.
(2) The background result was more than four times the spike added.

Lancaster Laboratories

2425 New Holland Pike, PO Box 12425, Lancaster, PA 17605-2425 • 717-656-2300 Fax: 717-656-2681 • www.lancasterlabs.com

Analysis Report

Quality Control Summary

Client Name: DaimlerChrysler Corporation
Reported: 07/21/04 at 01:05 AM

Group Number: 903560

*- Outside of specification
(1) The result for one or both determinations was less than five times the LOQ.
(2) The background result was more than four times the spike added.

Account# 10160 Group# 903560 Sample# 4310278 -79

DAIMLERCHRYSLER — Chain-of-Custody

3760 B

Lancaster Laboratories 2425 New Holland Pike Lancaster, PA 17601 Phone Number: (717) 656-2300 Fax Number: (717) 656-2681	Project Name: DAYTON THERMAL Site Location: DAYTON, OHIO Site Code: RFA Number: ET04051 DaimlerChrysler PM: GARY STANCZUK	Consultant: EARTH TECH Address: 4135 TECHNOLOGY PARKWAY SHEBOYGAN, WI 53083 Consultant PM ROB STENSON Phone: 920-451-2407 Fax: 920-4[redacted]

Turn-around Time Request: (circle)
24 calendar hrs.
48 calendar hrs.
7 calendar days
14 calendar days

Data Package Deliverables: (circle)
DaimlerChrysler Level 1
DaimlerChrysler Level 2
CLP

Matrix Codes
S - Soil SW - Surface Water
GW - Groundwater A - Air
Sed. - Sediment
O - Other (specify)

Are aqueous samples field filtered for metals? Yes No

Field Sample Identification	Date Collected	Time Collected	Grab (G) or Composite (C)	Matrix Code	Total # of Containers	VOCs									Remarks
GW-071304-1-ASINF-Ø	7/13/04	1310	G	GW	3	X									
TRIP BLANK	NA	NA	NA	NA	2	X									

Sampler(s) SC & JRD	Cooler ID #		Samples Relinquished under Airbill No.		Temperature (corrected) 2.5 C
	Relinquished by: S. CERVI	Date: 7/13/04	Time: 1700	Received by:	Date: Time: Custody Seal Intact? Yes No
Is RFA sampling complete? Yes No	Relinquished by:	Date:	Time:	Received for Laboratory by:	Date: 7/14/04 Time: 0840 Custody Seal Intact? Yes No

DaimlerChrysler Corporation 800 Chrysler Drive, CIMS 482-[redacted]51, Auburn Hills, Michigan 48326-2757

Distribution: White copy: Data package Yellow : Retained by laboratory Pink: Retained by sampler

7/14/04

Revision No. 3
Created: July 9, 1999

Lancaster Laboratories
2425 New Holland Pike
Lancaster, PA 17601
Phone (717)-656-2300
Fax (717) 656-2681

DAIMLERCHRYSLER CORPORATION
BOTTLE REQUEST AND SHIPMENT FORM

0848 B

PARAMETER	NO. OF BOTTLES NEEDED FOR TEST	NO. OF BOTTLES SENT	CHEMICAL PRESERVATIVE	PRESERVATIVE LOT NO.	BOTTLE TYPE	BOTTLE LOT NO.
Volatiles (H2O)	3	6	HCl	#RT004	Vials (40 ml)	4104013
Semivolatiles (H2O)	2*		None	N/A	Amber Liter	
PCBs (H2O)	2*		None	N/A	Amber Liter	
Metals (H2O)	1		HNO3		Plastic Liter	
Cyanide (H2O)	1		NaOH/ascorbic acid		Plastic Liter	
TPH- 418.1 (H2O)	2*		HCl		Amber Liter	
TPH-GRO (H2O)	3		HCl		Vials (40 ml)	
TPH-DRO (H2O)	2*		HCl		Amber Liter	
Volatiles (Soil)	1		None	N/A	125ml Glass Jar	
Volatiles (Soil - Low Level)	3		None	N/A	5 g Encore Samplers	
Volatiles (Soil - High Level)	1		None	N/A	5 g Encore Samplers	
TPH-GRO (Soil)	2		None	N/A	5 g Encore Samplers	
Semivolatiles/PCBs/418.1/ DRO/Metals/Moisture (Soil)	1		None	N/A	500ml Glass Jar	
DI Water	N/A		N/A	N/A	Amber Liter	
Trip Blank	2	2	HCl	#RT004	Vials (40 ml)	4104013
Temperature Blank	N/A	1 per cooler	N/A	N/A	N/A	N/A

Project Name: Dayton Thermal
RFA Number: FT04051
Ship To Address:
FedEx World Service Center
Hold for Pickup by Earth Tech
Airport Area
3605 Concorde Road
Vandalia, OH 45377

Customer Service Rep: Kathy Klinefelter Date: 7/8/04

pH strips? Yes / No (No) Labels? Yes (Yes) / No
DaimlerChrysler COCs? Yes (Yes) / No Custody seals? Yes (Yes) / No
Site-specific MS/MSD ? Yes / No (No)
Cooler No(s): C07810
Packed by: C. Carlson Date: 7/8/04
Shipped by: [signature] Date: 7/8/04

PROCESSING COMPLETED BY LANCASTER:
Received by: [signature] Was all glassware intact? Yes (Yes) No Received in good condition? Yes (Yes) No
Date: 07/12/04 If No, Explain:

Sampling Notes:

* - Two one-liter bottles are recommended for collection of semivolatiles, PCBs and TPH-DRO to allow for sample reextraction. However, if well volumes do not permit collection of this volume for each parameter, a minimum of 1 liter is required for each parameter.

IF SITE-SPECIFIC MS/MSD REQUESTED IN RFA: Additional bottles have been provided to permit collection of adequate volumes for SITE-SPECIFIC MS/MSD analyses for each analytical parameter. MS/MSD samples should be collected for each parameter and matrix at a rate of 1 in 20 samples or per sampling event if less than 20 samples are collected.

Additional Comments:

Please return all unused glassware and coolers when sampling is complete. Please return this form with final sample shipment.

White copy - original - return to lab
Revision 1 / July 9, 1999

Yellow copy - retained by field

Pink copy - retained by shipper

Lancaster Laboratories
2425 New Holland Pike • Lancaster, PA 17601

Environmental Sample Administration
Receipt Documentation Log

Client/Project: Chrysler / Earthtech (WI)

Date of Receipt: 7/14/04

Time of Receipt: 0840

Source Code: Soil

Shipping Container Sealed: Y / N

Custody Seal Present: Y / N

Custody Seal Intact: Y / N / NA

Package: Chilled / Not Chilled

Unpacker Emp. No.: 1075

1043 Temperature of Shipping Containers	
#1 1045	#2
Thermometer ID: 2041	Thermometer ID:
Temp.: 2.5C	Temp.:
Temp. Bottle / Surface Temp.	Temp. Bottle / Surface Temp.
Wet Ice / Dry Ice / Ice Packs	Wet Ice / Dry Ice / Ice Packs
Ice Present? Y / N Loose / Bagged	Ice Present? Y / N Loose / Bagged
#3	#4
Thermometer ID:	Thermometer ID:
Temp.:	Temp.:
Temp. Bottle / Surface Temp.	Temp. Bottle / Surface Temp.
Wet Ice / Dry Ice / Ice Packs	Wet Ice / Dry Ice / Ice Packs
Ice Present? Y / N Loose / Bagged	Ice Present? Y / N Loose / Bagged

Paperwork Discrepancy/Unpacking Problems:

Sample Administration Internal Chain of Custody			
Name	Date	Time	Reason for Transfer
[illegible]	7/14/04	1050	Unpacking / Storage
Mary Beth Stoner	07/14/04	1200	Place in Storage or Entry
			Remove from Storage
			Place in Storage or Entry
			Entry

Lancaster Laboratories
2425 New Holland Pike • Lancaster, PA 17601

Explanation of Symbols and Abbreviations

The following defines common symbols and abbreviations used in reporting technical data:

N.D.	none detected	**BMQL**	Below Minimum Quantitation Level
TNTC	Too Numerous To Count	**MPN**	Most Probable Number
IU	International Units	**CP Units**	cobalt-chloroplatinate units
umhos/cm	micromhos/cm	**NTU**	nephelometric turbidity units
C	degrees Celsius	**F**	degrees Fahrenheit
meq	milliequivalents	**lb.**	pound(s)
g	gram(s)	**kg**	kilogram(s)
ug	microgram(s)	**mg**	milligram(s)
ml	milliliter(s)	**l**	liter(s)
m3	cubic meter(s)	**ul**	microliter(s)

< less than - The number following the sign is the limit of quantitation, the smallest amount of analyte which can be reliably determined using this specific test.

> greater than

J estimated value – The result is ≥ the Method Detection Limit (MDL) and < the Limit of Quantitation (LOQ).

ppm parts per million - One ppm is equivalent to one milligram per kilogram (mg/kg), or one gram per million grams. For aqueous liquids, ppm is usually taken to be equivalent to milligrams per liter (mg/l), because one liter of water has a weight very close to a kilogram. For gases or vapors, one ppm is equivalent to one microliter of gas per liter of gas.

ppb parts per billion

Dry weight basis Results printed under this heading have been adjusted for moisture content. This increases the analyte weight concentration to approximate the value present in a similar sample without moisture. All other results are reported on an as-received basis.

U.S. EPA CLP Data Qualifiers:

Organic Qualifiers

A	TIC is a possible aldol-condensation product
B	Analyte was also detected in the blank
C	Pesticide result confirmed by GC/MS
D	Compound quantitated on a diluted sample
E	Concentration exceeds the calibration range of the instrument
N	Presumptive evidence of a compound (TICs only)
P	Concentration difference between primary and confirmation columns >25%
U	Compound was not detected
X,Y,Z	Defined in case narrative

Inorganic Qualifiers

B	Value is <CRDL, but ≥IDL
E	Estimated due to interference
M	Duplicate injection precision not met
N	Spike sample not within control limits
S	Method of standard additions (MSA) used for calculation
U	Compound was not detected
W	Post digestion spike out of control limits
*****	Duplicate analysis not within control limits
+	Correlation coefficient for MSA <0.995

Analytical test results for methods listed on the laboratories' accreditation scope meet all requirements of NELAC unless otherwise noted under the individual analysis.

Measurement uncertainty values, as applicable, are available upon request.

Tests results relate only to the sample tested. Clients should be aware that a critical step in a chemical or microbiological analysis is the collection of the sample. Unless the sample analyzed is truly representative of the bulk of material involved, the test results will be meaningless. If you have questions regarding the proper techniques of collecting samples, please contact us. We cannot be held responsible for sample integrity, however, unless sampling has been performed by a member of our staff. This report shall not be reproduced except in full, without the written approval of the laboratory.

WARRANTY AND LIMITS OF LIABILITY - In accepting analytical work, we warrant the accuracy of test results for the sample as submitted. THE FOREGOING EXPRESS WARRANTY IS EXCLUSIVE AND IS GIVEN IN LIEU OF ALL OTHER WARRANTIES, EXPRESSED OR IMPLIED. WE DISCLAIM ANY OTHER WARRANTIES, EXPRESSED OR IMPLIED, INCLUDING A WARRANTY OF FITNESS FOR PARTICULAR PURPOSE AND WARRANTY OF MERCHANTABILITY. IN NO EVENT SHALL LANCASTER LABORATORIES BE LIABLE FOR INDIRECT, SPECIAL, CONSEQUENTIAL, OR INCIDENTAL DAMAGES INCLUDING, BUT NOT LIMITED TO, DAMAGES FOR LOSS OF PROFIT OR GOODWILL REGARDLESS OF (A) THE NEGLIGENCE (EITHER SOLE OR CONCURRENT) OF LANCASTER LABORATORIES AND (B) WHETHER LANCASTER LABORATORIES HAS BEEN INFORMED OF THE POSSIBILITY OF SUCH DAMAGES. We accept no legal responsibility for the purposes for which the client uses the test results. No purchase order or other order for work shall be accepted by Lancaster Laboratories which includes any conditions that vary from the Standard Terms and Conditions of Lancaster Laboratories and we hereby object to any conflicting terms contained in any acceptance or order submitted by client.

Lancaster Laboratories

2425 New Holland Pike, PO Box 12425, Lancaster, PA 17605-2425 • 717-656-2300 Fax 717-656-2681 • www.lancasterlabs.com

Analysis Report

ANALYTICAL RESULTS

Prepared for:

DaimlerChrysler Corporation
PO Box 537933
Livonia MI 48153-7933

248-576-5741

Prepared by:

Lancaster Laboratories
2425 New Holland Pike
Lancaster, PA 17605-2425

SAMPLE GROUP

The sample group for this submittal is 903555. Samples arrived at the laboratory on Wednesday, July 14, 2004. The PO# for this group is N99C403749-B.

Client Description	Lancaster Labs Number
GW-071304-1-NPDES-0 Grab Water Sample	4310260
GW-071304-2-NPDES-1 Grab Water Sample	4310261
Trip_Blank Water Sample	4310262

ELECTRONIC COPY TO	Earth Tech	Attn: Ms. Lisa Smith
ELECTRONIC COPY TO	Earth Tech	Attn: Mr. Rob Stenson
1 COPY TO	LLI	Attn: Ms. Kathy Klinefelter

Lancaster Laboratories

Analysis Report

2425 New Holland Pike, PO Box 12425, Lancaster, PA 17605-2425 • 717-656-2300 Fax: 717-656-2681 • www.lancasterlabs.com

Lancaster Laboratories Sample No. WW 4310260

GW-071304-1-NPDES-0 Grab Water Sample
Site Code: SC001 RFA# ET04049
Dayton Thermal/Dayton, OH
Collected: 07/13/2004 13:00 by JRD

Account Number: 10160

Submitted: 07/14/2004 08:40
Reported: 07/26/2004 at 10:35
Discard: 09/25/2004

DaimlerChrysler Corporation
PO Box 537933
Livonia MI 48153-7933

1NPDE SDG#: DCQ09-01

CAT No.	Analysis Name	CAS Number	As Received Result		As Received Method Detection Limit	Units	Dilution Factor
06291	TCL by 8260 (water)						
05386	Vinyl Chloride	75-01-4	N.D.		1.	ug/l	1
05390	1,1-Dichloroethene	75-35-4	N.D.		0.8	ug/l	1
05395	cis-1,2-Dichloroethene	156-59-2	N.D.		0.8	ug/l	1
05398	1,1,1-Trichloroethane	71-55-6	N.D.		0.8	ug/l	1
05403	Trichloroethene	79-01-6	3.	J	1.	ug/l	1
05409	Tetrachloroethene	127-18-4	N.D.		0.8	ug/l	1

Laboratory Chronicle

CAT No.	Analysis Name	Method	Trial#	Analysis Date and Time	Analyst	Dilution Factor
06291	TCL by 8260 (water)	SW-846 8260B	1	07/15/2004 14:17	Joshua P Schaeffer	1
01163	GC/MS VOA Water Prep	SW-846 5030B	1	07/15/2004 14:17	Joshua P Schaeffer	n.a.

Lancaster Laboratories

Analysis Report

2425 New Holland Pike, PO Box 12425, Lancaster, PA 17605-2425 • 717-656-2300 Fax: 717-656-2681 • www.lancasterlabs.com

Questions? Contact your Client Services Representative
Katherine A Klinefelter at (717) 656-2300.

Respectfully Submitted,

Robin C. Runkle
Senior Chemist

Lancaster Laboratories

Analysis Report

2425 New Holland Pike, PO Box 12425, Lancaster, PA 17605-2425 • 717-656-2300 Fax: 717-656-2681 • www.lancasterlabs.com

Lancaster Laboratories Sample No. WW 4310261

GW-071304-2-NPDES-1 Grab Water Sample
Site Code: SC001 RFA# ET04049
Dayton Thermal/Dayton, OH
Collected:07/13/2004 13:05 by JRD

Account Number: 10160

Submitted: 07/14/2004 08:40
Reported: 07/26/2004 at 10:35
Discard: 09/25/2004

DaimlerChrysler Corporation
PO Box 537933
Livonia MI 48153-7933

2NPDE SDG#: DCQ09-02

CAT No.	Analysis Name	CAS Number	As Received Result		As Received Method Detection Limit	Units	Dilution Factor
06291	TCL by 8260 (water)						
05386	Vinyl Chloride	75-01-4	N.D.		1.	ug/l	1
05390	1,1-Dichloroethene	75-35-4	N.D.		0.8	ug/l	1
05395	cis-1,2-Dichloroethene	156-59-2	0.9	J	0.8	ug/l	1
05398	1,1,1-Trichloroethane	71-55-6	N.D.		0.8	ug/l	1
05403	Trichloroethene	79-01-6	4.	J	1.	ug/l	1
05409	Tetrachloroethene	127-18-4	N.D.		0.8	ug/l	1

Laboratory Chronicle

CAT No.	Analysis Name	Method	Trial#	Analysis Date and Time	Analyst	Dilution Factor
06291	TCL by 8260 (water)	SW-846 8260B	1	07/15/2004 14:41	Joshua P Schaeffer	1
01163	GC/MS VOA Water Prep	SW-846 5030B	1	07/15/2004 14:41	Joshua P Schaeffer	n.a.

Lancaster Laboratories

Analysis Report

2425 New Holland Pike, PO Box 12425, Lancaster, PA 17605-2425 • 717-656-2300 Fax: 717-656-2681 • www.lancasterlabs.com

Lancaster Laboratories Sample No. WW 4310262

Trip_Blank Water Sample
Site Code: SC001 RFA# ET04049
Dayton Thermal/Dayton, OH
Collected: n.a.

Account Number: 10160

Submitted: 07/14/2004 08:40
Reported: 07/26/2004 at 10:35
Discard: 09/25/2004

DaimlerChrysler Corporation
PO Box 537933
Livonia MI 48153-7933

TBDAY SDG#: DCQ09-03TB*

CAT No.	Analysis Name	CAS Number	As Received Result	As Received Method Detection Limit	Units	Dilution Factor
06291	TCL by 8260 (water)					
05386	Vinyl Chloride	75-01-4	N.D.	1.	ug/l	1
05390	1,1-Dichloroethene	75-35-4	N.D.	0.8	ug/l	1
05395	cis-1,2-Dichloroethene	156-59-2	N.D.	0.8	ug/l	1
05398	1,1,1-Trichloroethane	71-55-6	N.D.	0.8	ug/l	1
05403	Trichloroethene	79-01-6	N.D.	1.	ug/l	1
05409	Tetrachloroethene	127-18-4	N.D.	0.8	ug/l	1

Laboratory Chronicle

CAT No.	Analysis Name	Method	Trial#	Analysis Date and Time	Analyst	Dilution Factor
06291	TCL by 8260 (water)	SW-846 8260B	1	07/15/2004 15:04	Joshua P Schaeffer	1
01163	GC/MS VOA Water Prep	SW-846 5030B	1	07/15/2004 15:04	Joshua P Schaeffer	n.a.

Lancaster Laboratories

2425 New Holland Pike, PO Box 12425, Lancaster, PA 17605-2425 • 717-656-2300 Fax: 717-656-2681 • www.lancasterlabs.com

Analysis Report

Quality Control Summary

Client Name: DaimlerChrysler Corporation
Reported: 07/26/04 at 10:35 AM

Group Number: 903555

Matrix QC may not be reported if site-specific QC samples were not submitted. In these situations, to demonstrate precision and accuracy at a batch level, a LCS/LCSD was performed, unless otherwise specified in the method.

Laboratory Compliance Quality Control

Analysis Name	Blank Result	Blank MDL	Report Units	LCS %REC	LCSD %REC	LCS/LCSD Limits	RPD	RPD Max
Batch number: N041971AB	Sample number(s): 4310260-4310262							
Vinyl Chloride	N.D.	1.	ug/l	110	112	71-129	2	30
1,1-Dichloroethene	N.D.	0.8	ug/l	107	109	79-130	1	30
cis-1,2-Dichloroethene	N.D.	0.8	ug/l	102	105	84-117	3	30
1,1,1-Trichloroethane	N.D.	0.8	ug/l	104	105	83-127	1	30
Trichloroethene	N.D.	1.	ug/l	105	104	87-117	0	30
Tetrachloroethene	N.D.	0.8	ug/l	97	100	82-126	2	30

Sample Matrix Quality Control

Analysis Name	MS %REC	MSD %REC	MS/MSD Limits	RPD	RPD MAX	BKG Conc	DUP Conc	DUP RPD	Dup RPD Max
Batch number: N041971AB	Sample number(s): 4310260-4310262								
Vinyl Chloride	116		70-151						
1,1-Dichloroethene	113		78-146						
cis-1,2-Dichloroethene	104		83-126						
1,1,1-Trichloroethane	107		82-135						
Trichloroethene	109		75-135						
Tetrachloroethene	106		75-143						

Surrogate Quality Control

Analysis Name: TCL by 8260 (water)
Batch number: N041971AB

	Dibromofluoromethane	1,2-Dichloroethane-d4	Toluene-d8	4-Bromofluorobenzene
4310260	104	103	109	103
4310261	103	102	109	104
4310262	103	102	110	104
Blank	104	104	110	104
LCS	104	107	105	107
LCSD	104	105	106	109
MS	103	102	108	107
Limits:	81-120	82-112	85-112	83-113

*- Outside of specification
(1) The result for one or both determinations was less than five times the LOQ.
(2) The background result was more than four times the spike added.

Lancaster Laboratories

Analysis Report

2425 New Holland Pike, PO Box 12425, Lancaster, PA 17605-2425 • 717-656-2300 Fax: 717-656-2681 • www.lancasterlabs.com

Quality Control Summary

Client Name: DaimlerChrysler Corporation
Reported: 07/26/04 at 10:35 AM

Group Number: 903555

*- Outside of specification
(1) The result for one or both determinations was less than five times the LOQ.
(2) The background result was more than four times the spike added.

DAIMLERCHRYSLER Chain-of-Custody

3762 B

Account# 10160 Group# 903555 Sample# 4310260-62

Lancaster Laboratories 2425 New Holland Pike Lancaster, PA 17601 Phone Number: (717) 656-2300 Fax Number: (717) 656-2681	Project Name: DAYTON THERMAL Site Location: DAYTON, OHIO Site Code: RFA Number: ET04049 DaimlerChrysler PM: GARY STANCZUK	Consultant: EARTH TECH Address: 4135 TECHNOLOGY PARKWAY SHEBOYGAN, WI 53083 Consultant PM ROB STENSON Phone: 920-451-2407 Fax: 920-458-0550

Turn-around Time Request: (circle)
24 calendar hrs.
48 calendar hrs.
7 calendar days
14 calendar days

Data Package Deliverables: (circle)
DaimlerChrysler Level 1
DaimlerChrysler Level 2
CLP

Matrix Codes
S - Soil SW - Surface Water
GW - Groundwater A - Air
Sed. - Sediment
O - Other (specify)

Are aqueous samples field filtered for metals? Yes No

Field Sample Identification	Date Collected	Time Collected	Grab (G) or Composite (C)	Matrix Code	Total # of Containers	VOCs								Remarks
GW-071304-1-NPDES-Ø	7/13/04	1300	G	GW	3	X								
GW-071304-2-NPDES-1	7/13/04	1305	G	GW	3	X								
TRIP BLANK	NA	NA	NA	NA	2	X								
TEMP BLANK	NA	NA	NA	NA	1									

Sampler(s) SC & JRD	Cooler ID #			Samples Relinquished under Airbill No.			Temperature (corrected) 2.5c
	Relinquished by: STEVE CERVI	Date: 7-13-04	Time: 1700	Received by:	Date:	Time:	Custody Seal Intact? Yes No
Is RFA sampling complete? Yes No	Relinquished by:	Date:	Time:	Received for Laboratory by:	Date: 7/14/04	Time: 0840	Custody Seal Intact? Yes No

DaimlerChrysler Corporation 800 Chrysler Drive, CIMS 482-00-31, Auburn Hills, Michigan 48326-2757

Distribution: White copy: Data package Yellow : Retained by laboratory Pink: Retained by sampler

Revision No. 3
Created: July 9, 1999

Lancaster Laboratories
2425 New Holland Pike
Lancaster, PA 17601
Phone (717)-656-2300
Fax (717) 656-2681

DAIMLERCHRYSLER CORPORATION BOTTLE REQUEST AND SHIPMENT FORM

0850 B

PARAMETER	NO. OF BOTTLES NEEDED FOR TEST	NO. OF BOTTLES SENT	CHEMICAL PRESERVATIVE	PRESERVATIVE LOT NO.	BOTTLE TYPE	BOTTLE LOT NO.
Volatiles (H2O)	3	6	HCl	R+004	Vials (40 ml)	4104013
Semivolatiles (H2O)	2*		None	N/A	Amber Liter	
PCBs (H2O)	2*		None	N/A	Amber Liter	
Metals (H2O)	1		HNO3		Plastic Liter	
Cyanide (H2O)	1		NaOH/ascorbic acid		Plastic Liter	
TPH- 418.1 (H2O)	2*		HCl		Amber Liter	
TPH-GRO (H2O)	3		HCl		Vials (40 ml)	
TPH-DRO (H2O)	2*		HCl		Amber Liter	
Volatiles (Soil)	1		None	N/A	125ml Glass Jar	
Volatiles (Soil - Low Level)	3		None	N/A	5 g Encore Samplers	
Volatiles (Soil - High Level)	1		None	N/A	5 g Encore Samplers	
TPH-GRO (Soil)	2		None	N/A	5 g Encore Samplers	
Semivolatiles/PCBs/418.1/ DRO/Metals/Moisture (Soil)	1		None	N/A	500ml Glass Jar	
DI Water	N/A		N/A	N/A	Amber Liter	
Trip Blank	2	2	HCl	R+004	Vials (40 ml)	4104013
Temperature Blank	N/A	1 per cooler	N/A	N/A	N/A	N/A

Project Name: Dayton Thermal
RFA Number: ET04049
Ship To Address:
FedEx World Service Center,
Hold for Pickup by Earth Tech
Airport Area
3605 Concorde Road
Vandalia, OH 45377

Customer Service Rep: Kathy Klinefelter
Date: 7/8/04

pH strips? Yes / No
DaimlerChrysler COCs? Yes / No
Site-specific MS/MSD ? Yes / No
Cooler No(s): C08283
Packed by: [illegible] Date 7-8-04
Shipped by: [illegible] Date 7/8/04

Labels? Yes / No
Custody seals? Yes / No

[redacted]

Sampling Notes:

* - Two one-liter bottles are recommended for collection of semivolatiles, PCBs and TPH-DRO to allow for sample reextraction. However, if well volumes do not permit collection of this volume for each parameter, a minimum of 1 liter is required for each parameter.

IF SITE-SPECIFIC MS/MSD REQUESTED IN RFA: Additional bottles have been provided to permit collection of adequate volumes for SITE-SPECIFIC MS/MSD analyses for each analytical parameter. MS/MSD samples should be collected for each parameter and matrix at a rate of 1 in 20 samples or per sampling event if less than 20 samples are collected.

Additional Comments:

Please return all unused glassware and coolers when sampling is complete. Please return this form with final sample shipment.

White copy - original - return to lab
Revision 1 / July 9, 1999

Yellow copy - retained by field

Pink copy - retained by shipper

Lancaster Laboratories
2425 New Holland Pike • Lancaster, PA 17601

Environmental Sample Administration
Receipt Documentation Log

Client/Project: Chrysler / Earthtech (WI)

Date of Receipt: 7/14/04

Time of Receipt: 0840

Source Code: 501

Shipping Container Sealed: Y / N

Custody Seal Present: Y / N

Custody Seal Intact: Y / N / NA

Packages: Chilled / Not Chilled

Unpacker Emp. No.: 1075

1043

Temperature of Shipping Containers	
#1 1045	#2
Thermometer ID: 2041	Thermometer ID:
Temp.: 2.5C	Temp.:
Temp. Bottle / Surface Temp.	Temp. Bottle / Surface Temp.
Wet Ice / Dry Ice / Ice Packs	Wet Ice / Dry Ice / Ice Packs
Ice Present? Y / N Loose / Bagged	Ice Present? Y / N Loose / Bagged
#3	#4
Thermometer ID:	Thermometer ID:
Temp.:	Temp.:
Temp. Bottle / Surface Temp.	Temp. Bottle / Surface Temp.
Wet Ice / Dry Ice / Ice Packs	Wet Ice / Dry Ice / Ice Packs
Ice Present? Y / N Loose / Bagged	Ice Present? Y / N Loose / Bagged

Paperwork Discrepancy/Unpacking Problems:

Sample Administration Internal Chain of Custody

Name	Date	Time	Reason for Transfer
[illegible]	7/14/04	1050	Unpacking / Storage
Mary Beth Stoner	07/14/04	1130	Place in Storage or Entry
			Remove from Storage
			Place in Storage or Entry
			Entry

Lancaster Laboratories
2425 New Holland Pike • Lancaster, PA 17601

Explanation of Symbols and Abbreviations

The following defines common symbols and abbreviations used in reporting technical data:

N.D.	none detected	**BMQL**	Below Minimum Quantitation Level
TNTC	Too Numerous To Count	**MPN**	Most Probable Number
IU	International Units	**CP Units**	cobalt-chloroplatinate units
umhos/cm	micromhos/cm	**NTU**	nephelometric turbidity units
C	degrees Celsius	**F**	degrees Fahrenheit
meq	milliequivalents	**lb.**	pound(s)
g	gram(s)	**kg**	kilogram(s)
ug	microgram(s)	**mg**	milligram(s)
ml	milliliter(s)	**l**	liter(s)
m3	cubic meter(s)	**ul**	microliter(s)

< less than - The number following the sign is the limit of quantitation, the smallest amount of analyte which can be reliably determined using this specific test.

> greater than

J estimated value – The result is ≥ the Method Detection Limit (MDL) and < the Limit of Quantitation (LOQ).

ppm parts per million - One ppm is equivalent to one milligram per kilogram (mg/kg), or one gram per million grams. For aqueous liquids, ppm is usually taken to be equivalent to milligrams per liter (mg/l), because one liter of water has a weight very close to a kilogram. For gases or vapors, one ppm is equivalent to one microliter of gas per liter of gas.

ppb parts per billion

Dry weight basis Results printed under this heading have been adjusted for moisture content. This increases the analyte weight concentration to approximate the value present in a similar sample without moisture. All other results are reported on an as-received basis.

U.S. EPA CLP Data Qualifiers:

Organic Qualifiers

A	TIC is a possible aldol-condensation product
B	Analyte was also detected in the blank
C	Pesticide result confirmed by GC/MS
D	Compound quantitated on a diluted sample
E	Concentration exceeds the calibration range of the instrument
N	Presumptive evidence of a compound (TICs only)
P	Concentration difference between primary and confirmation columns >25%
U	Compound was not detected
X,Y,Z	Defined in case narrative

Inorganic Qualifiers

B	Value is <CRDL, but ≥IDL
E	Estimated due to interference
M	Duplicate injection precision not met
N	Spike sample not within control limits
S	Method of standard additions (MSA) used for calculation
U	Compound was not detected
W	Post digestion spike out of control limits
*****	Duplicate analysis not within control limits
+	Correlation coefficient for MSA <0.995

Analytical test results for methods listed on the laboratories' accreditation scope meet all requirements of NELAC unless otherwise noted under the individual analysis.

Measurement uncertainty values, as applicable, are available upon request.

Tests results relate only to the sample tested. Clients should be aware that a critical step in a chemical or microbiological analysis is the collection of the sample. Unless the sample analyzed is truly representative of the bulk of material involved, the test results will be meaningless. If you have questions regarding the proper techniques of collecting samples, please contact us. We cannot be held responsible for sample integrity, however, unless sampling has been performed by a member of our staff. This report shall not be reproduced except in full, without the written approval of the laboratory.

WARRANTY AND LIMITS OF LIABILITY - In accepting analytical work, we warrant the accuracy of test results for the sample as submitted. THE FOREGOING EXPRESS WARRANTY IS EXCLUSIVE AND IS GIVEN IN LIEU OF ALL OTHER WARRANTIES, EXPRESSED OR IMPLIED. WE DISCLAIM ANY OTHER WARRANTIES, EXPRESSED OR IMPLIED, INCLUDING A WARRANTY OF FITNESS FOR PARTICULAR PURPOSE AND WARRANTY OF MERCHANTABILITY. IN NO EVENT SHALL LANCASTER LABORATORIES BE LIABLE FOR INDIRECT, SPECIAL, CONSEQUENTIAL, OR INCIDENTAL DAMAGES INCLUDING, BUT NOT LIMITED TO, DAMAGES FOR LOSS OF PROFIT OR GOODWILL REGARDLESS OF (A) THE NEGLIGENCE (EITHER SOLE OR CONCURRENT) OF LANCASTER LABORATORIES AND (B) WHETHER LANCASTER LABORATORIES HAS BEEN INFORMED OF THE POSSIBILITY OF SUCH DAMAGES. We accept no legal responsibility for the purposes for which the client uses the test results. No purchase order or other order for work shall be accepted by Lancaster Laboratories which includes any conditions that vary from the Standard Terms and Conditions of Lancaster Laboratories and we hereby object to any conflicting terms contained in any acceptance or order submitted by client.

Lancaster Laboratories

2425 New Holland Pike, PO Box 12425, Lancaster, PA 17605-2425 • 717-656-2300 Fax 717-656-2681 • www.lancasterlabs.com

Analysis Report

ANALYTICAL RESULTS

Prepared for:

DaimlerChrysler Corporation
PO Box 537933
Livonia MI 48153-7933

248-576-5741

Prepared by:

Lancaster Laboratories
2425 New Holland Pike
Lancaster, PA 17605-2425

SAMPLE GROUP

The sample group for this submittal is 903559. Samples arrived at the laboratory on Wednesday, July 14, 2004. The PO# for this group is N99C403749-B.

Client Description	Lancaster Labs Number
GW-071304-1-RI-0 Grab Water Sample	4310276
Trip_Blank Water Sample	4310277

ELECTRONIC COPY TO	Earth Tech	Attn: Ms. Lisa Smith
ELECTRONIC COPY TO	Earth Tech	Attn: Mr. Rob Stenson
1 COPY TO	LLI	Attn: Ms. Kathy Klinefelter

Lancaster Laboratories

Analysis Report

2425 New Holland Pike, PO Box 12425, Lancaster, PA 17605-2425 • 717-656-2300 Fax 717-656-2681 • www.lancasterlabs.com

Questions? Contact your Client Services Representative
Katherine A Klinefelter at (717) 656-2300.

Respectfully Submitted,

Max E. Snavely
Senior Chemist

Lancaster Laboratories

Analysis Report

2425 New Holland Pike, PO Box 12425, Lancaster, PA 17605-2425 • 717-656-2300 Fax: 717-656-2681 • www.lancasterlabs.com

Lancaster Laboratories Sample No. WW 4310276

GW-071304-1-RI-0 Grab Water Sample
Site Code: SC001 RFA# ET04050
Dayton Thermal/Dayton, OH
Collected:07/13/2004 13:20 by SC

Account Number: 10160

Submitted: 07/14/2004 08:40
Reported: 07/26/2004 at 17:38
Discard: 09/25/2004

DaimlerChrysler Corporation
PO Box 537933
Livonia MI 48153-7933

GW1RI SDG#: DCQ10-01

CAT No.	Analysis Name	CAS Number	As Received Result		As Received Method Detection Limit	Units	Dilution Factor
00259	Mercury	7439-97-6	N.D.		0.000028	mg/l	1
07035	Arsenic	7440-38-2	N.D.		0.0047	mg/l	1
07036	Selenium	7782-49-2	N.D.		0.0059	mg/l	1
07044	Antimony	7440-36-0	N.D.		0.0092	mg/l	1
07046	Barium	7440-39-3	0.133		0.00045	mg/l	1
07049	Cadmium	7440-43-9	N.D.		0.00076	mg/l	1
07051	Chromium	7440-47-3	N.D.		0.0025	mg/l	1
07055	Lead	7439-92-1	N.D.		0.0100	mg/l	1
08255	Total Cyanide (water)	57-12-5	N.D.		0.0050	mg/l	1
06291	TCL by 8260 (water)						
05386	Vinyl Chloride	75-01-4	3.	J	1.	ug/l	1
05390	1,1-Dichloroethene	75-35-4	4.	J	0.8	ug/l	1
05395	cis-1,2-Dichloroethene	156-59-2	27.		0.8	ug/l	1
05398	1,1,1-Trichloroethane	71-55-6	56.		0.8	ug/l	1
05399	Carbon Tetrachloride	56-23-5	8.		1.	ug/l	1
05402	1,2-Dichloroethane	107-06-2	N.D.		1.	ug/l	1
05403	Trichloroethene	79-01-6	110.		1.	ug/l	1
05404	1,2-Dichloropropane	78-87-5	N.D.		1.	ug/l	1
05408	1,1,2-Trichloroethane	79-00-5	N.D.		0.8	ug/l	1
05409	Tetrachloroethene	127-18-4	240.		2.	ug/l	2

Laboratory Chronicle

CAT No.	Analysis Name	Method	Trial#	Analysis Date and Time	Analyst	Dilution Factor
00259	Mercury	SW-846 7470A	1	07/16/2004 09:39	Damary Valentin	1
07035	Arsenic	SW-846 6010B	1	07/23/2004 20:55	John P Hook	1
07036	Selenium	SW-846 6010B	1	07/23/2004 20:55	John P Hook	1
07044	Antimony	SW-846 6010B	1	07/23/2004 20:55	John P Hook	1
07046	Barium	SW-846 6010B	1	07/23/2004 20:55	John P Hook	1
07049	Cadmium	SW-846 6010B	1	07/23/2004 20:55	John P Hook	1
07051	Chromium	SW-846 6010B	1	07/23/2004 20:55	John P Hook	1
07055	Lead	SW-846 6010B	1	07/26/2004 14:25	Jayme E Curet	1
08255	Total Cyanide (water)	SW-846 9012A	1	07/15/2004 17:14	Venia B McFadden	1
06291	TCL by 8260 (water)	SW-846 8260B	1	07/15/2004 15:29	Joshua P Schaeffer	1
06291	TCL by 8260 (water)	SW-846 8260B	1	07/16/2004 10:18	Joshua P Schaeffer	2
01163	GC/MS VOA Water Prep	SW-846 5030B	1	07/15/2004 15:29	Joshua P Schaeffer	n.a.

Lancaster Laboratories

Analysis Report

2425 New Holland Pike, PO Box 12425, Lancaster, PA 17605-2425 • 717-656-2300 Fax: 717-656-2681 • www.lancasterlabs.com

Lancaster Laboratories Sample No. WW 4310276

GW-071304-1-RI-0 Grab Water Sample
Site Code: SC001 RFA# ET04050
Dayton Thermal/Dayton, OH
Collected:07/13/2004 13:20 by SC

Account Number: 10160

Submitted: 07/14/2004 08:40
Reported: 07/26/2004 at 17:38
Discard: 09/25/2004

DaimlerChrysler Corporation
PO Box 537933
Livonia MI 48153-7933

GW1RI SDG#: DCQ10-01

01163	GC/MS VOA Water Prep	SW-846 5030B	2	07/16/2004 10:18	Joshua P Schaeffer	n.a.
01848	WW SW846 ICP Digest (tot rec)	SW-846 3005A	1	07/15/2004 20:15	James L Mertz	1
05713	WW SW846 Hg Digest	SW-846 7470A	1	07/15/2004 16:30	Nelli S Markaryan	1
08256	Cyanide Water Distillation	SW-846 9012A	1	07/15/2004 09:30	Choon Y Tian	1

Lancaster Laboratories

Analysis Report

2425 New Holland Pike, PO Box 12425, Lancaster, PA 17605-2425 • 717-656-2300 Fax: 717-656-2681 • www.lancasterlabs.com

Lancaster Laboratories Sample No. WW 4310277

Trip_Blank Water Sample
Site Code: SC001 RFA# ET04050
Dayton Thermal/Dayton, OH
Collected: n.a.

Account Number: 10160

Submitted: 07/14/2004 08:40
Reported: 07/26/2004 at 17:38
Discard: 09/25/2004

DaimlerChrysler Corporation
PO Box 537933
Livonia MI 48153-7933

1RITB SDG#: DCQ10-02TB*

CAT No.	Analysis Name	CAS Number	As Received Result	As Received Method Detection Limit	Units	Dilution Factor
06291	TCL by 8260 (water)					
05386	Vinyl Chloride	75-01-4	N.D.	1.	ug/l	1
05390	1,1-Dichloroethene	75-35-4	N.D.	0.8	ug/l	1
05395	cis-1,2-Dichloroethene	156-59-2	N.D.	0.8	ug/l	1
05398	1,1,1-Trichloroethane	71-55-6	N.D.	0.8	ug/l	1
05399	Carbon Tetrachloride	56-23-5	N.D.	1.	ug/l	1
05402	1,2-Dichloroethane	107-06-2	N.D.	1.	ug/l	1
05403	Trichloroethene	79-01-6	N.D.	1.	ug/l	1
05404	1,2-Dichloropropane	78-87-5	N.D.	1.	ug/l	1
05408	1,1,2-Trichloroethane	79-00-5	N.D.	0.8	ug/l	1
05409	Tetrachloroethene	127-18-4	N.D.	0.8	ug/l	1

Laboratory Chronicle

CAT No.	Analysis Name	Method	Trial#	Analysis Date and Time	Analyst	Dilution Factor
06291	TCL by 8260 (water)	SW-846 8260B	1	07/15/2004 15:53	Joshua P Schaeffer	1
01163	GC/MS VOA Water Prep	SW-846 5030B	1	07/15/2004 15:53	Joshua P Schaeffer	n.a.

Lancaster Laboratories

2425 New Holland Pike, PO Box 12425, Lancaster, PA 17605-2425 • 717-656-2300 Fax: 717-656-2681 • www.lancasterlabs.com

Analysis Report

Quality Control Summary

Client Name: DaimlerChrysler Corporation
Reported: 07/26/04 at 05:38 PM

Group Number: 903559

Matrix QC may not be reported if site-specific QC samples were not submitted. In these situations, to demonstrate precision and accuracy at a batch level, a LCS/LCSD was performed, unless otherwise specified in the method.

Laboratory Compliance Quality Control

Analysis Name	Blank Result	Blank MDL	Report Units	LCS %REC	LCSD %REC	LCS/LCSD Limits	RPD	RPD Max
Batch number: 04197117101A	Sample number(s): 4310276							
Total Cyanide (water)	N.D.	0.0050	mg/l	106		90-110		
Batch number: 041971848004	Sample number(s): 4310276							
Arsenic	N.D.	0.0047	mg/l	101		92-109		
Selenium	N.D.	0.0059	mg/l	98		91-111		
Antimony	N.D.	0.0092	mg/l	105		94-112		
Barium	N.D.	0.00045	mg/l	102		93-109		
Cadmium	N.D.	0.00076	mg/l	107		97-111		
Chromium	N.D.	0.0025	mg/l	105		95-112		
Lead	N.D.	0.0100	mg/l	104		93-110		
Batch number: 041975713002	Sample number(s): 4310276							
Mercury	N.D.	0.00002 8	mg/l	105		80-120		
Batch number: N041971AB	Sample number(s): 4310276-4310277							
Vinyl Chloride	N.D.	1.	ug/l	110	112	71-129	2	30
1,1-Dichloroethene	N.D.	0.8	ug/l	107	109	79-130	1	30
cis-1,2-Dichloroethene	N.D.	0.8	ug/l	102	105	84-117	3	30
1,1,1-Trichloroethane	N.D.	0.8	ug/l	104	105	83-127	1	30
Carbon Tetrachloride	N.D.	1.	ug/l	103	105	77-130	2	30
1,2-Dichloroethane	N.D.	1.	ug/l	102	101	77-132	1	30
Trichloroethene	N.D.	1.	ug/l	105	104	87-117	0	30
1,2-Dichloropropane	N.D.	1.	ug/l	105	106	80-117	1	30
1,1,2-Trichloroethane	N.D.	0.8	ug/l	98	98	86-113	1	30
Tetrachloroethene	N.D.	0.8	ug/l	97	100	82-126	2	30
Batch number: N041971AC	Sample number(s): 4310276							
Tetrachloroethene	N.D.	0.8	ug/l	97	100	82-126	2	30

Sample Matrix Quality Control

Analysis Name	MS %REC	MSD %REC	MS/MSD Limits	RPD	RPD MAX	BKG Conc	DUP Conc	DUP RPD	Dup RPD Max
Batch number: 04197117101A	Sample number(s): 4310276								
Total Cyanide (water)	108		39-141			N.D.	N.D.	0 (1)	20
Batch number: 041971848004	Sample number(s): 4310276								
Arsenic	100	100	86-119	1	20	N.D.	N.D.	0 (1)	20
Selenium	98	98	75-125	0	20	N.D.	0.0060 J	200* (1)	20

*- Outside of specification
(1) The result for one or both determinations was less than five times the LOQ.
(2) The background result was more than four times the spike added.

Lancaster Laboratories

2425 New Holland Pike, PO Box 12425, Lancaster, PA 17605-2425 •717-656-2300 Fax: 717-656-2681• www.lancasterlabs.com

Analysis Report

Quality Control Summary

Client Name: DaimlerChrysler Corporation
Reported: 07/26/04 at 05:38 PM

Group Number: 903559

Sample Matrix Quality Control

Analysis Name	MS %REC	MSD %REC	MS/MSD Limits	RPD	RPD MAX	BKG Conc	DUP Conc	DUP RPD	Dup RPD Max
Antimony	104	104	75-125	0	20	N.D.	N.D.	0 (1)	20
Barium	102	103	82-113	1	20	0.0612	0.0609	1	20
Cadmium	104	103	87-117	1	20	N.D.	N.D.	0 (1)	20
Chromium	104	103	86-118	1	20	N.D.	N.D.	0 (1)	20
Lead	101	102	87-118	1	20	N.D.	N.D.	0 (1)	20
Batch number: 041975713002	Sample number(s): 4310276								
Mercury	106	106	80-120	0	20	N.D.	0.000043 J	200* (1)	20
Batch number: N041971AB	Sample number(s): 4310276-4310277								
Vinyl Chloride	116		70-151						
1,1-Dichloroethene	113		78-146						
cis-1,2-Dichloroethene	104		83-126						
1,1,1-Trichloroethane	107		82-135						
Carbon Tetrachloride	108		73-144						
1,2-Dichloroethane	101		73-136						
Trichloroethene	109		75-135						
1,2-Dichloropropane	106		81-121						
1,1,2-Trichloroethane	99		77-125						
Tetrachloroethene	106		75-143						
Batch number: N041971AC	Sample number(s): 4310276								
Tetrachloroethene	106		75-143						

Surrogate Quality Control

Analysis Name: TCL by 8260 (water)
Batch number: N041971AB

	Dibromofluoromethane	1,2-Dichloroethane-d4	Toluene-d8	4-Bromofluorobenzene
4310276	104	103	110	104
4310277	104	101	110	104
Blank	104	104	110	104
LCS	104	107	105	107
LCSD	104	105	106	109
MS	103	102	108	107
Limits:	81-120	82-112	85-112	83-113

Analysis Name: 8260 Master Scan (water)
Batch number: N041971AC

	Dibromofluoromethane	1,2-Dichloroethane-d4	Toluene-d8	4-Bromofluorobenzene
Blank	103	103	109	104
LCS	104	107	105	107
LCSD	104	105	106	109
MS	103	102	108	107
Limits:	81-120	82-112	85-112	83-113

*- Outside of specification
(1) The result for one or both determinations was less than five times the LOQ.
(2) The background result was more than four times the spike added.

Lancaster Laboratories

2425 New Holland Pike, PO Box 12425, Lancaster, PA 17605-2425 • 717-656-2300 Fax: 717-656-2681 • www.lancasterlabs.com

Analysis Report

Quality Control Summary

Client Name: DaimlerChrysler Corporation
Reported: 07/26/04 at 05:38 PM

Group Number: 903559

*- Outside of specification
(1) The result for one or both determinations was less than five times the LOQ.
(2) The background result was more than four times the spike added.

1192521

DAIMLERCHRYSLER Chain-of-Custody

3759 B

Account # 101160 Group # 903559 Sample# 4310276-77

Lancaster Laboratories	Project Name: DAYTON THERMAL	Consultant: EARTH TECH
2425 New Holland Pike	Site Location: DAYTON, OHIO	Address: 4435 TECHNOLOGY PARKWAY
Lancaster, PA 17601	Site Code:	SHEBOYGAN, WI 53083
Phone Number: (717) 656-2300	RFA Number: ET04050	Consultant PM ROB STENSON
Fax Number: (717) 656-2681	DaimlerChrysler PM: GARY STANCZUK	Phone: 920 451-2407 Fax: 920-458-0650

Turn-around Time Request: (circle)
24 calendar hrs.
48 calendar hrs.
7 calendar days
14 calendar days

Data Package Deliverables: (circle)
DaimlerChrysler Level 1
DaimlerChrysler Level 2
CLP

Matrix Codes
S - Soil, SW - Surface Water, GW - Groundwater, A - Air, Sed. - Sediment, O - Other (specify)

Are aqueous samples field filtered for metals? Yes No

Field Sample Identification	Date Collected	Time Collected	Grab (G) or Composite (C)	Matrix Code	Total # of Containers	VOCs	RCRA METALS	TOTAL CYANIDE							Remarks
GW-071304-1-RI-Ø	7/13/04	1320	G	GW	5	X	X	X							
TRIP BLANK	NA	NA	NA	NA	2	X	X	X							

Sampler(s) SC : JRD	Cooler ID #			Samples Relinquished under Airbill No.		Temperature (corrected) 2.5 C
	Relinquished by:	Date: 7-8-04	Time: 1538	Received by:	Date:	Time: Custody Seal Intact? Yes No
Is RFA sampling complete? Yes No	Relinquished by: S. CERVI	Date: 7-13-04	Time: 1700	Received for Laboratory by:	Date: 7/14/04	Time: 0840 Custody Seal Intact? Yes No

DaimlerChrysler Corporation 800 Chrysler Drive, CIMS 482-00-51, Auburn Hills, Michigan 48326-2757

Distribution: White copy: Data package Yellow : Retained by laboratory Pink: Retained by sampler

Revision No. 3
Created: July 9, 1999

Lancaster Laboratories
2425 New Holland Pike
Lancaster, PA 17601
Phone (717)-656-2300
Fax (717) 656-2681

DAIMLERCHRYSLER CORPORATION BOTTLE REQUEST AND SHIPMENT FORM

0849 B

PARAMETER	NO. OF BOTTLES NEEDED FOR TEST	NO. OF BOTTLES SENT	CHEMICAL PRESERVATIVE	PRESERVATIVE LOT NO.	BOTTLE TYPE	BOTTLE LOT NO.
Volatiles (H2O)	3	6	HCl	RT004	Vials (40 ml)	4104013
Semivolatiles (H2O)	2*		None	N/A	Amber Liter	
PCBs (H2O)	2*		None	N/A	Amber Liter	
08 Metals (H2O)	1	2	HNO3	06-16-01	Plastic ~~liter~~ 500 ml	510141
02 Cyanide (H2O)	1	2	NaOH/ascorbic acid	031285-24 10126LB	Plastic ~~Liter~~ 500 ml	507781
TPH- 418.1 (H2O)	2*		HCl		Amber Liter	
TPH-GRO (H2O)	3		HCl		Vials (40 ml)	
TPH-DRO (H2O)	2*		HCl		Amber Liter	
Volatiles (Soil)	1		None	N/A	125ml Glass Jar	
Volatiles (Soil - Low Level)	3		None	N/A	5 g Encore Samplers	
Volatiles (Soil - High Level)	1		None	N/A	5 g Encore Samplers	
TPH-GRO (Soil)	2		None	N/A	5 g Encore Samplers	
Semivolatiles/PCBs/418.1/ DRO/Metals/Moisture (Soil)	1		None	N/A	500ml Glass Jar	
DI Water	N/A		N/A	N/A	Amber Liter	
Trip Blank	2	2	HCl	RT004	Vials (40 ml)	4104013
Temperature Blank	N/A	1 per cooler	N/A	N/A	N/A	N/A

Project Name: Dayton Thermal
RFA Number: ET04050
Ship To Address:
FedEx World Service Center,
Hold for Pickup by Earth Tech
Airport Area
3605 Concorde Road
Vandalia, OH 45377

Customer Service Rep: Kathy Klinefelter Date 7/8/04

pH strips? Yes / No
DaimlerChrysler COCs? Yes No
Site-specific MS/MSD? Yes No
Cooler No(s): C08464
Packed by: K. Hunt Date 7-8-04
Shipped by: [illegible] Date 7/8/04

Labels? Yes No
Custody seals? Yes No

[redacted]

Sampling Notes:

* - Two one-liter bottles are recommended for collection of semivolatiles, PCBs and TPH-DRO to allow for sample reextraction. However, if well volumes do not permit collection of this volume for each parameter, a minimum of 1 liter is required for each parameter.

IF SITE-SPECIFIC MS/MSD REQUESTED IN RFA: Additional bottles have been provided to permit collection of adequate volumes for SITE-SPECIFIC MS/MSD analyses for each analytical parameter. MS/MSD samples should be collected for each parameter and matrix at a rate of 1 in 20 samples or per sampling event if less than 20 samples are collected.

Additional Comments:

Please return all unused glassware and coolers when sampling is complete. Please return this form with final sample shipment.

White copy - original - return to lab
Revision 1 / July 9, 1999

Yellow copy - retained by field

Pink copy - retained by shipper

Lancaster Laboratories
2425 New Holland Pike • Lancaster, PA 17601

Environmental Sample Administration
Receipt Documentation Log

Client/Project: Chrysler / Earthtech (WI)

Date of Receipt: 7/14/04

Time of Receipt: 0840

Source Code: SO 1

Shipping Container Sealed: Y / N

Custody Seal Present: Y / N

Custody Seal Intact: Y / N / NA

Package: Chilled / Not Chilled

Unpacker Emp. No.: 1075

1043

Temperature of Shipping Containers	
#1 1045	#2
Thermometer ID: 2041	Thermometer ID:
Temp.: 2.5C	Temp.:
Temp. Bottle / Surface Temp.	Temp. Bottle / Surface Temp.
Wet Ice / Dry Ice / Ice Packs	Wet Ice / Dry Ice / Ice Packs
Ice Present? Y / N Loose / Bagged	Ice Present? Y / N Loose / Bagged
#3	#4
Thermometer ID:	Thermometer ID:
Temp.:	Temp.:
Temp. Bottle / Surface Temp.	Temp. Bottle / Surface Temp.
Wet Ice / Dry Ice / Ice Packs	Wet Ice / Dry Ice / Ice Packs
Ice Present? Y / N Loose / Bagged	Ice Present? Y / N Loose / Bagged

Paperwork Discrepancy/Unpacking Problems:

Sample Administration Internal Chain of Custody			
Name	Date	Time	Reason for Transfer
[illegible]	7/14/04	1050	Unpacking / Storage
Mary Beth Stoner	07/14/04	1155	Place in Storage or Entry
			Remove from Storage
			Place in Storage or Entry
			Entry

Lancaster Laboratories
2425 New Holland Pike • Lancaster, PA 17601

Explanation of Symbols and Abbreviations

The following defines common symbols and abbreviations used in reporting technical data:

N.D.	none detected	**BMQL**	Below Minimum Quantitation Level
TNTC	Too Numerous To Count	**MPN**	Most Probable Number
IU	International Units	**CP Units**	cobalt-chloroplatinate units
umhos/cm	micromhos/cm	**NTU**	nephelometric turbidity units
C	degrees Celsius	**F**	degrees Fahrenheit
meq	milliequivalents	**lb.**	pound(s)
g	gram(s)	**kg**	kilogram(s)
ug	microgram(s)	**mg**	milligram(s)
ml	milliliter(s)	**l**	liter(s)
m3	cubic meter(s)	**ul**	microliter(s)

< less than - The number following the sign is the limit of quantitation, the smallest amount of analyte which can be reliably determined using this specific test.

> greater than

J estimated value – The result is ≥ the Method Detection Limit (MDL) and < the Limit of Quantitation (LOQ).

ppm parts per million - One ppm is equivalent to one milligram per kilogram (mg/kg), or one gram per million grams. For aqueous liquids, ppm is usually taken to be equivalent to milligrams per liter (mg/l), because one liter of water has a weight very close to a kilogram. For gases or vapors, one ppm is equivalent to one microliter of gas per liter of gas.

ppb parts per billion

Dry weight basis Results printed under this heading have been adjusted for moisture content. This increases the analyte weight concentration to approximate the value present in a similar sample without moisture. All other results are reported on an as-received basis.

U.S. EPA CLP Data Qualifiers:

Organic Qualifiers

A	TIC is a possible aldol-condensation product
B	Analyte was also detected in the blank
C	Pesticide result confirmed by GC/MS
D	Compound quantitated on a diluted sample
E	Concentration exceeds the calibration range of the instrument
N	Presumptive evidence of a compound (TICs only)
P	Concentration difference between primary and confirmation columns >25%
U	Compound was not detected
X,Y,Z	Defined in case narrative

Inorganic Qualifiers

B	Value is <CRDL, but ≥IDL
E	Estimated due to interference
M	Duplicate injection precision not met
N	Spike sample not within control limits
S	Method of standard additions (MSA) used for calculation
U	Compound was not detected
W	Post digestion spike out of control limits
*****	Duplicate analysis not within control limits
+	Correlation coefficient for MSA <0.995

Analytical test results for methods listed on the laboratories' accreditation scope meet all requirements of NELAC unless otherwise noted under the individual analysis.

Measurement uncertainty values, as applicable, are available upon request.

Tests results relate only to the sample tested. Clients should be aware that a critical step in a chemical or microbiological analysis is the collection of the sample. Unless the sample analyzed is truly representative of the bulk of material involved, the test results will be meaningless. If you have questions regarding the proper techniques of collecting samples, please contact us. We cannot be held responsible for sample integrity, however, unless sampling has been performed by a member of our staff. This report shall not be reproduced except in full, without the written approval of the laboratory.

WARRANTY AND LIMITS OF LIABILITY - In accepting analytical work, we warrant the accuracy of test results for the sample as submitted. THE FOREGOING EXPRESS WARRANTY IS EXCLUSIVE AND IS GIVEN IN LIEU OF ALL OTHER WARRANTIES, EXPRESSED OR IMPLIED. WE DISCLAIM ANY OTHER WARRANTIES, EXPRESSED OR IMPLIED, INCLUDING A WARRANTY OF FITNESS FOR PARTICULAR PURPOSE AND WARRANTY OF MERCHANTABILITY. IN NO EVENT SHALL LANCASTER LABORATORIES BE LIABLE FOR INDIRECT, SPECIAL, CONSEQUENTIAL, OR INCIDENTAL DAMAGES INCLUDING, BUT NOT LIMITED TO, DAMAGES FOR LOSS OF PROFIT OR GOODWILL REGARDLESS OF (A) THE NEGLIGENCE (EITHER SOLE OR CONCURRENT) OF LANCASTER LABORATORIES AND (B) WHETHER LANCASTER LABORATORIES HAS BEEN INFORMED OF THE POSSIBILITY OF SUCH DAMAGES. We accept no legal responsibility for the purposes for which the client uses the test results. No purchase order or other order for work shall be accepted by Lancaster Laboratories which includes any conditions that vary from the Standard Terms and Conditions of Lancaster Laboratories and we hereby object to any conflicting terms contained in any acceptance or order submitted by client.

Lancaster Laboratories

Analysis Report

2425 New Holland Pike, PO Box 12425, Lancaster, PA 17605-2425 • 717-656-2301 Fax: 717-656-2681 • www.lancasterlabs.com

ANALYTICAL RESULTS

Prepared for:

DaimlerChrysler Corporation
PO Box 537933
Livonia MI 48153-7933

248-576-5741

Prepared by:

Lancaster Laboratories
2425 New Holland Pike
Lancaster, PA 17605-2425

SAMPLE GROUP

The sample group for this submittal is 901008. Samples arrived at the laboratory on Wednesday, June 23, 2004. The PO# for this group is N99C403749-B.

Client Description	Lancaster Labs Number
AS_Effluent Grab Water Sample	4298113
Trip_Blank Water Sample	4298114

ELECTRONIC COPY TO	Earth Tech	Attn: Ms. Lisa Smith
ELECTRONIC COPY TO	Earth Tech	Attn: Mr. Rob Stenson
1 COPY TO	LLI	Attn: Ms. Kathy Klinefelter

Lancaster Laboratories

Analysis Report

[illegible] Lancaster, PA [illegible] Fax [illegible] www.lancasterlabs.com

Questions? Contact your Client Services Representative
Katherine A Klinefelter at (717) 656-2300.

Respectfully Submitted,

Robin C. Runkle
Senior Chemist

Lancaster Laboratories

Analysis Report

2425 New Holland Pike, PO Box 12425, Lancaster, PA 17605-2425 • 717-656-2300 Fax 717-656-2681 • www.lancasterlabs.com

Lancaster Laboratories Sample No. WW 4298113

AS_Effluent Grab Water Sample
Site Code: SC001 RFA# ET04041
Dayton Thermal/Dayton, OH
Collected:06/22/2004 12:00 by BD

Account Number: 10160

Submitted: 06/23/2004 09:25
Reported: 06/30/2004 at 08:56
Discard: 08/30/2004

DaimlerChrysler Corporation
PO Box 537933
Livonia MI 48153-7933

ASLNT SDG#: DCP94-01

CAT No.	Analysis Name	CAS Number	As Received Result		As Received Method Detection Limit	Units	Dilution Factor
06291	TCL by 8260 (water)						
05386	Vinyl Chloride	75-01-4	N.D.		1.	ug/l	1
05390	1,1-Dichloroethene	75-35-4	N.D.		0.8	ug/l	1
05395	cis-1,2-Dichloroethene	156-59-2	N.D.		0.8	ug/l	1
05398	1,1,1-Trichloroethane	71-55-6	N.D.		0.8	ug/l	1
05403	Trichloroethene	79-01-6	2.	J	1.	ug/l	1
05409	Tetrachloroethene	127-18-4	N.D.		0.8	ug/l	1

Laboratory Chronicle

CAT No.	Analysis Name	Method	Trial#	Analysis Date and Time	Analyst	Dilution Factor
06291	TCL by 8260 (water)	SW-846 8260B	1	06/25/2004 20:25	Susan McMahon-Luu	1
01163	GC/MS VOA Water Prep	SW-846 5030B	1	06/25/2004 20:25	Susan McMahon-Luu	n.a.

Lancaster Laboratories

Analysis Report

2425 New Holland Pike, PO Box 12425, Lancaster, PA 17605-2425 • 717-656-2300 Fax: 717-656-2681 • www.lancasterlabs.com

Lancaster Laboratories Sample No. WW 4298114

Trip_Blank Water Sample
Site Code: SC001 RFA# ET04041
Dayton Thermal/Dayton, OH
Collected: n.a.

Account Number: 10160

Submitted: 06/23/2004 09:25
Reported: 06/30/2004 at 08:56
Discard: 08/30/2004

DaimlerChrysler Corporation
PO Box 537933
Livonia MI 48153-7933

TBDDY SDG#: DCP94-02TB*

CAT No.	Analysis Name	CAS Number	As Received Result	As Received Method Detection Limit	Units	Dilution Factor
06291	TCL by 8260 (water)					
05386	Vinyl Chloride	75-01-4	N.D.	1.	ug/l	1
05390	1,1-Dichloroethene	75-35-4	N.D.	0.8	ug/l	1
05395	cis-1,2-Dichloroethene	156-59-2	N.D.	0.8	ug/l	1
05398	1,1,1-Trichloroethane	71-55-6	N.D.	0.8	ug/l	1
05403	Trichloroethene	79-01-6	N.D.	1.	ug/l	1
05409	Tetrachloroethene	127-18-4	N.D.	0.8	ug/l	1

Laboratory Chronicle

CAT No.	Analysis Name	Method	Trial#	Analysis Date and Time	Analyst	Dilution Factor
06291	TCL by 8260 (water)	SW-846 8260B	1	06/25/2004 20:48	Susan McMahon-Luu	1
01163	GC/MS VOA Water Prep	SW-846 5030B	1	06/25/2004 20:48	Susan McMahon-Luu	n.a.

Lancaster Laboratories

2425 New Holland Pike, PO Box 12425, Lancaster, PA 17605-2425 • 717-656-2300 Fax: 717-656-2681 • www.lancasterlabs.com

Analysis Report

Quality Control Summary

Client Name: DaimlerChrysler Corporation
Reported: 06/30/04 at 08:56 AM

Group Number: 901008

Matrix QC may not be reported if site-specific QC samples were not submitted. In these situations, to demonstrate precision and accuracy at a batch level, a LCS/LCSD was performed, unless otherwise specified in the method.

Laboratory Compliance Quality Control

Analysis Name	Blank Result	Blank MDL	Report Units	LCS %REC	LCSD %REC	LCS/LCSD Limits	RPD	RPD Max
Batch number: W041771AA	Sample number(s): 4298113-4298114							
Vinyl Chloride	N.D.	1.	ug/l	105		71-129		
1,1-Dichloroethene	N.D.	0.8	ug/l	99		79-130		
cis-1,2-Dichloroethene	N.D.	0.8	ug/l	92		84-117		
1,1,1-Trichloroethane	N.D.	0.8	ug/l	91		83-127		
Trichloroethene	N.D.	1.	ug/l	89		87-117		
Tetrachloroethene	N.D.	0.8	ug/l	88		82-126		

Sample Matrix Quality Control

Analysis Name	MS %REC	MSD %REC	MS/MSD Limits	RPD	RPD MAX	BKG Conc	DUP Conc	DUP RPD	Dup RPD Max
Batch number: W041771AA	Sample number(s): 4298113-4298114								
Vinyl Chloride	105	113	70-151	7	30				
1,1-Dichloroethene	108	110	78-146	2	30				
cis-1,2-Dichloroethene	95	99	83-126	4	30				
1,1,1-Trichloroethane	95	95	82-135	1	30				
Trichloroethene	90	90	75-135	0	30				
Tetrachloroethene	88	87	75-143	2	30				

Surrogate Quality Control

Analysis Name: TCL by 8260 (water)
Batch number: W041771AA

	Dibromofluoromethane	1,2-Dichloroethane-d4	Toluene-d8	4-Bromofluorobenzene
4298113	93	95	89	87
4298114	92	90	90	88
Blank	91	91	90	88
LCS	91	93	90	88
MS	90	92	92	91
MSD	90	92	90	89
Limits:	81-120	82-112	85-112	83-113

*- Outside of specification
(1) The result for one or both determinations was less than five times the LOQ.
(2) The background result was more than four times the spike added.

Lancaster Laboratories

2425 New Holland Pike, PO Box 12425, Lancaster, PA 17605-2425 • 717-656-2300 Fax 717-656-2681 • www.lancasterlabs.com

Analysis Report

Quality Control Summary

Client Name: DaimlerChrysler Corporation
Reported: 06/30/04 at 08:56 AM

Group Number: 901008

*- Outside of specification
(1) The result for one or both determinations was less than five times the LOQ.
(2) The background result was more than four times the spike added.

Lancaster Laboratories
2425 New Holland Pike • Lancaster, PA 17601

Explanation of Symbols and Abbreviations

The following defines common symbols and abbreviations used in reporting technical data:

N.D.	none detected	**BMQL**	Below Minimum Quantitation Level
TNTC	Too Numerous To Count	**MPN**	Most Probable Number
IU	International Units	**CP Units**	cobalt-chloroplatinate units
umhos/cm	micromhos/cm	**NTU**	nephelometric turbidity units
C	degrees Celsius	**F**	degrees Fahrenheit
meq	milliequivalents	**lb.**	pound(s)
g	gram(s)	**kg**	kilogram(s)
ug	microgram(s)	**mg**	milligram(s)
ml	milliliter(s)	**l**	liter(s)
m3	cubic meter(s)	**ul**	microliter(s)

< less than - The number following the sign is the limit of quantitation, the smallest amount of analyte which can be reliably determined using this specific test.

> greater than

J estimated value – The result is ≥ the Method Detection Limit (MDL) and < the Limit of Quantitation (LOQ).

ppm parts per million - One ppm is equivalent to one milligram per kilogram (mg/kg), or one gram per million grams. For aqueous liquids, ppm is usually taken to be equivalent to milligrams per liter (mg/l), because one liter of water has a weight very close to a kilogram. For gases or vapors, one ppm is equivalent to one microliter of gas per liter of gas.

ppb parts per billion

Dry weight basis Results printed under this heading have been adjusted for moisture content. This increases the analyte weight concentration to approximate the value present in a similar sample without moisture. All other results are reported on an as-received basis.

U.S. EPA CLP Data Qualifiers:

Organic Qualifiers

A	TIC is a possible aldol-condensation product
B	Analyte was also detected in the blank
C	Pesticide result confirmed by GC/MS
D	Compound quantitated on a diluted sample
E	Concentration exceeds the calibration range of the instrument
N	Presumptive evidence of a compound (TICs only)
P	Concentration difference between primary and confirmation columns >25%
U	Compound was not detected
X,Y,Z	Defined in case narrative

Inorganic Qualifiers

B	Value is <CRDL, but ≥IDL
E	Estimated due to interference
M	Duplicate injection precision not met
N	Spike sample not within control limits
S	Method of standard additions (MSA) used for calculation
U	Compound was not detected
W	Post digestion spike out of control limits
*****	Duplicate analysis not within control limits
+	Correlation coefficient for MSA <0.995

Analytical test results for methods listed on the laboratories' accreditation scope meet all requirements of NELAC unless otherwise noted under the individual analysis.

Measurement uncertainty values, as applicable, are available upon request.

Tests results relate only to the sample tested. Clients should be aware that a critical step in a chemical or microbiological analysis is the collection of the sample. Unless the sample analyzed is truly representative of the bulk of material involved, the test results will be meaningless. If you have questions regarding the proper techniques of collecting samples, please contact us. We cannot be held responsible for sample integrity, however, unless sampling has been performed by a member of our staff. This report shall not be reproduced except in full, without the written approval of the laboratory.

WARRANTY AND LIMITS OF LIABILITY - In accepting analytical work, we warrant the accuracy of test results for the sample as submitted. THE FOREGOING EXPRESS WARRANTY IS EXCLUSIVE AND IS GIVEN IN LIEU OF ALL OTHER WARRANTIES, EXPRESSED OR IMPLIED. WE DISCLAIM ANY OTHER WARRANTIES, EXPRESSED OR IMPLIED, INCLUDING A WARRANTY OF FITNESS FOR PARTICULAR PURPOSE AND WARRANTY OF MERCHANTABILITY. IN NO EVENT SHALL LANCASTER LABORATORIES BE LIABLE FOR INDIRECT, SPECIAL, CONSEQUENTIAL, OR INCIDENTAL DAMAGES INCLUDING, BUT NOT LIMITED TO, DAMAGES FOR LOSS OF PROFIT OR GOODWILL REGARDLESS OF (A) THE NEGLIGENCE (EITHER SOLE OR CONCURRENT) OF LANCASTER LABORATORIES AND (B) WHETHER LANCASTER LABORATORIES HAS BEEN INFORMED OF THE POSSIBILITY OF SUCH DAMAGES. We accept no legal responsibility for the purposes for which the client uses the test results. No purchase order or other order for work shall be accepted by Lancaster Laboratories which includes any conditions that vary from the Standard Terms and Conditions of Lancaster Laboratories and we hereby object to any conflicting terms contained in any acceptance or order submitted by client.

Acct 10160 Grp #901008 4298 113-14

DAIMLERCHRYSLER — Chain-of-Custody

3732 B

Lancaster Laboratories	Project Name: DCX Dayton	Consultant: Earth Tech	
2425 New Holland Pike	Site Location: Dayton, ~~[illegible]~~ OH	Address: 4135 Technology Pkwy	
Lancaster, PA 17601	Site Code:	Sheboygan, WI 53083	
Phone Number: (717) 656-2300	RFA Number: ET 4041	Consultant PM: Rob Stenson	
Fax Number: (717) 656-2681	DaimlerChrysler PM: Gary ~~[illegible]~~ Stanczuk	Phone: 920 458 8711	Fax: 920-458-0558

Turn-around Time Request: (circle)
24 calendar hrs.
48 calendar hrs.
7 calendar days
14 calendar days

Data Package Deliverables: (circle)
DaimlerChrysler Level 1
DaimlerChrysler Level 2
CLP

Matrix Codes
S - Soil; SW - Surface Water; GW - Groundwater; A - Air; Sed. - Sediment; O - Other (specify)

Are aqueous samples field filtered for metals? Yes No

Field Sample Identification	Date Collected	Time Collected	Grab (G) or Composite (C)	Matrix Code	Total # of Containers	8260								Remarks
AS Effluent	6.22	1200	✓	GW	3	✓								
~~[illegible]~~														
Trip Blank					2	✓								

Sampler(s): Bryan Dyt	Cooler ID #			Samples Relinquished under Airbill No.			Temperature (corrected) 2 C
	Relinquished by: Bryan Dyt	Date: 6.22	Time: 1400	Received by:	Date:	Time:	Custody Seal Intact? Yes No
Is RFA sampling complete? Yes No	Relinquished by:	Date:	Time:	Received for Laboratory by: Mary Beth Stoner	Date: 06/23/04	Time: 0925	Custody Seal Intact? (Yes) No

DaimlerChrysler Corporation 800 Chrysler Drive, CIMS 482-00-51, Auburn Hills, Michigan 48326-2757

Distribution: White copy: Data package Yellow : Retained by laboratory Pink: Retained by sampler

Lancaster Laboratories
2425 New Holland Pike • Lancaster, PA 17601

Environmental Sample Administration
Receipt Documentation Log

Client/Project: Daimler Chrysler (OH)

Date of Receipt: 06/23/04

Time of Receipt: 0925

Source Code: 50

Shipping Container Sealed: (Y) / N

Custody Seal Present: (Y) / N

Custody Seal Intact: (Y) / N / NA

Package: (Chilled) / Not Chilled

Unpacker Emp. No.: 1607

Temperature of Shipping Containers	
#1	#2
Thermometer ID: HB12066	~~Thermometer ID:~~
Temp.: 2 °C	~~Temp.:~~
(Temp. Bottle) / Surface Temp.	~~Temp. Bottle / Surface Temp.~~
(Wet Ice) / Dry Ice / Ice Packs	~~Wet Ice / Dry Ice / Ice Packs~~
Ice Present? (Y) / N Loose / (Bagged)	~~Ice Present? Y / N Loose / Bagged~~
#3	#4
~~Thermometer ID:~~	~~Thermometer ID:~~
~~Temp.:~~	~~Temp.:~~
~~Temp. Bottle / Surface Temp.~~	~~Temp. Bottle / Surface Temp.~~
~~Wet Ice / Dry Ice / Ice Packs~~	~~Wet Ice / Dry Ice / Ice Packs~~
~~Ice Present? Y / N Loose / Bagged~~	~~Ice Present? Y / N Loose / Bagged~~

Paperwork Discrepancy/Unpacking Problems:

Sample Administration Internal Chain of Custody			
Name	Date	Time	Reason for Transfer
Mary Beth Stomer	06/23/04	1020	Unpacking
[illegible]	6-23-04	1025	(Place in Storage) or Entry
[illegible]	6-23-04	1035	Remove from Storage Entry
			Place in Storage or Entry
			Entry

Lancaster Laboratories

2425 New Holland Pike, PO Box 12425, Lancaster, PA 17605-2425 • 717-656-2300 Fax 717-656-2681 • www.lancasterlabs.com

Analysis Report

ANALYTICAL RESULTS

Prepared for:

DaimlerChrysler Corporation
PO Box 537933
Livonia MI 48153-7933

248-576-5741

Prepared by:

Lancaster Laboratories
2425 New Holland Pike
Lancaster, PA 17605-2425

SAMPLE GROUP

The sample group for this submittal is 953150. Samples arrived at the laboratory on Thursday, July 28, 2005. The PO# for this group is N99C403749-B.

Client Description	Lancaster Labs Number
South_Bank_H Tedlar Bag Grab Air Sample	4572485
South_Bank_I Tedlar Bag Grab Air Sample	4572486
South_Bank_E Tedlar Bag Grab Air Sample	4572487
South_Bank_F Tedlar Bag Grab Air Sample	4572488
South_Bank_G Tedlar Bag Grab Air Sample	4572489
North_Bank_6 Tedlar Bag Grab Air Sample	4572490
North_Bank_2 Tedlar Bag Grab Air Sample	4572491
North_Bank_3 Tedlar Bag Grab Air Sample	4572492
North_Bank_4 Tedlar Bag Grab Air Sample	4572493

ELECTRONIC COPY TO	Earth Tech	Attn: Lisa Smith
ELECTRONIC COPY TO	Earth Tech	Attn: Rob Stenson
ELECTRONIC COPY TO	DaimlerChrysler Corporation	Attn: Gary Stanczuk
1 COPY TO	LLI	Attn: Kathy Klinefelter
ELECTRONIC COPY TO	Earth Tech	Attn: Jamie Dickson

Lancaster Laboratories

Analysis Report

2425 New Holland Pike, PO Box 12425, Lancaster, PA 17605-2425 • 717-656-2300 Fax: 717-656-2681 • www.lancasterlabs.com

Questions? Contact your Client Services Representative
Katherine A Klinefelter at (717) 656-2300

Respectfully Submitted,

Michele J. Smith

Michele J. Smith
Group Leader

Lancaster Laboratories

Analysis Report

2425 New Holland Pike, PO Box 12425, Lancaster, PA 17605-2425 • 717-656-2300 Fax: 717-656-2681 • www.lancasterlabs.com

Lancaster Laboratories Sample No. AQ 4572485

South_Bank_H Tedlar Bag Grab Air Sample
Site Code: SC001 RFA #: GMS05010
Dayton Thermal/Dayton, OH
Collected:07/27/2005 10:09 by GS

Account Number: 10160

Submitted: 07/28/2005 09:05
Reported: 08/01/2005 at 23:36
Discard: 10/01/2005

DaimlerChrysler Corporation
PO Box 537933
Livonia MI 48153-7933

SBHDT SDG#: DCU22-01

CAT No.	Analysis Name	CAS Number	As Received Result		As Received Method Detection Limit	Units	Dilution Factor
07869	TO-14A VOA Ext. List Tedlar						
02076	tert-Butyl Alcohol	75-65-0	56.		0.20	ppb(v)	1
07201	Propene	115-07-1	2.0		0.20	ppb(v)	1
07202	Dichlorodifluoromethane	75-71-8	0.60	J	0.20	ppb(v)	1
07203	Chlorodifluoromethane	75-45-6	2.0		1.0	ppb(v)	1
07204	Freon 114	76-14-2	N.D.		0.20	ppb(v)	1
07205	Chloromethane	74-87-3	0.50	J	0.20	ppb(v)	1
07206	Vinyl Chloride	75-01-4	N.D.		0.20	ppb(v)	1
07207	1,3-Butadiene	106-99-0	N.D.		1.0	ppb(v)	1
07208	Bromomethane	74-83-9	N.D.		0.20	ppb(v)	1
07209	Chloroethane	75-00-3	2.0		0.20	ppb(v)	1
07210	Dichlorofluoromethane	75-43-4	N.D.		0.20	ppb(v)	1
07212	Trichlorofluoromethane	75-69-4	0.70	J	0.20	ppb(v)	1
07213	Pentane	109-66-0	3.0		0.20	ppb(v)	1
07214	Acrolein	107-02-8	2.0		0.50	ppb(v)	1
07215	1,1-Dichloroethene	75-35-4	21.		0.20	ppb(v)	1
07216	Freon 113	76-13-1	2.0		0.50	ppb(v)	1
07217	Acetone	67-64-1	67.		1.0	ppb(v)	1
07218	Methyl Iodide	74-88-4	N.D.		0.20	ppb(v)	1
07219	Carbon Disulfide	75-15-0	6.0		0.50	ppb(v)	1
07220	Acetonitrile	75-05-8	5.0		0.50	ppb(v)	1
07221	3-Chloropropene	107-05-1	N.D.		0.50	ppb(v)	1
07222	Methylene Chloride	75-09-2	9.0		0.50	ppb(v)	1
07223	Acrylonitrile	107-13-1	5.0		0.50	ppb(v)	1
07224	trans-1,2-Dichloroethene	156-60-5	1.0		0.20	ppb(v)	1
07225	Methyl t-Butyl Ether	1634-04-4	0.30	J	0.20	ppb(v)	1
07226	Hexane	110-54-3	2.0		0.20	ppb(v)	1
07227	1,1-Dichloroethane	75-34-3	14.		0.20	ppb(v)	1
07228	Vinyl Acetate	108-05-4	N.D.		0.20	ppb(v)	1
07230	cis-1,2-Dichloroethene	156-59-2	47.		0.20	ppb(v)	1
07231	2-Butanone	78-93-3	15.		0.50	ppb(v)	1
07232	Ethyl Acetate	141-78-6	N.D.		0.20	ppb(v)	1
07233	Methyl Acrylate	96-33-3	N.D.		0.20	ppb(v)	1
07234	Chloroform	67-66-3	0.40	J	0.20	ppb(v)	1
07235	1,1,1-Trichloroethane	71-55-6	60.		0.20	ppb(v)	1
07236	Carbon Tetrachloride	56-23-5	N.D.		0.20	ppb(v)	1
07237	1,2-Dichloroethane	107-06-2	N.D.		0.20	ppb(v)	1
07238	Benzene	71-43-2	1.0		0.20	ppb(v)	1
07239	Isooctane	540-84-1	0.50	J	0.20	ppb(v)	1

Lancaster Laboratories

2425 New Holland Pike, PO Box 12425, Lancaster, PA 17605-2425 • 717-656-2300 Fax: 717-656-2681 • www.lancasterlabs.com

Analysis Report

Lancaster Laboratories Sample No. AQ 4572485

South_Bank_H Tedlar Bag Grab Air Sample
Site Code: SC001 RFA #: GMS05010
Dayton Thermal/Dayton, OH
Collected:07/27/2005 10:09 by GS

Account Number: 10160

Submitted: 07/28/2005 09:05
Reported: 08/01/2005 at 23:36
Discard: 10/01/2005

DaimlerChrysler Corporation
PO Box 537933
Livonia MI 48153-7933

SBHDT SDG#: DCU22-01

CAT No.	Analysis Name	CAS Number	As Received Result		As Received Method Detection Limit	Units	Dilution Factor
07240	Heptane	142-82-5	3.0		0.20	ppb(v)	1
07241	Trichloroethene	79-01-6	81.		0.20	ppb(v)	1
07242	Ethyl Acrylate	140-88-5	0.60	J	0.20	ppb(v)	1
07243	1,2-Dichloropropane	78-87-5	N.D.		0.20	ppb(v)	1
07244	Methyl Methacrylate	80-62-6	N.D.		0.20	ppb(v)	1
07245	Dibromomethane	74-95-3	N.D.		0.20	ppb(v)	1
07246	1,4-Dioxane	123-91-1	N.D.		0.20	ppb(v)	1
07247	Bromodichloromethane	75-27-4	N.D.		0.20	ppb(v)	1
07248	*cis-1,3-Dichloropropene*	10061-01-5	N.D.		0.20	ppb(v)	1
07249	4-Methyl-2-Pentanone	108-10-1	0.80	J	0.50	ppb(v)	1
07250	Toluene	108-88-3	13.		0.20	ppb(v)	1
07251	Octane	111-65-9	3.0		0.20	ppb(v)	1
07252	trans-1,3-Dichloropropene	10061-02-6	N.D.		0.20	ppb(v)	1
07253	Ethyl Methacrylate	97-63-2	N.D.		0.20	ppb(v)	1
07254	1,1,2-Trichloroethane	79-00-5	N.D.		0.20	ppb(v)	1
07255	Tetrachloroethene	127-18-4	9.0		0.20	ppb(v)	1
07256	2-Hexanone	591-78-6	0.80	J	0.50	ppb(v)	1
07257	Dibromochloromethane	124-48-1	N.D.		0.20	ppb(v)	1
07258	1,2-Dibromoethane	106-93-4	N.D.		0.20	ppb(v)	1
07259	Chlorobenzene	108-90-7	0.70	J	0.20	ppb(v)	1
07260	1,1,1,2-Tetrachloroethane	630-20-6	N.D.		0.20	ppb(v)	1
07261	Ethylbenzene	100-41-4	6.0		0.20	ppb(v)	1
07262	m/p-Xylene	1330-20-7	20.		0.20	ppb(v)	1
07263	o-Xylene	95-47-6	9.0		0.20	ppb(v)	1
07264	Styrene	100-42-5	13.		0.20	ppb(v)	1
07265	Bromoform	75-25-2	N.D.		0.20	ppb(v)	1
07266	Cumene	98-82-8	1.0		0.20	ppb(v)	1
07267	1,1,2,2-Tetrachloroethane	79-34-5	N.D.		0.20	ppb(v)	1
07268	1,2,3-Trichloropropane	96-18-4	N.D.		0.20	ppb(v)	1
07269	Bromobenzene	108-86-1	N.D.		0.20	ppb(v)	1
07270	4-Ethyltoluene	622-96-8	4.0		0.20	ppb(v)	1
07271	1,3,5-Trimethylbenzene	108-67-8	2.0		0.20	ppb(v)	1
07272	Alpha Methyl Styrene	98-83-9	0.50	J	0.20	ppb(v)	1
07273	1,2,4-Trimethylbenzene	95-63-6	7.0		0.20	ppb(v)	1
07274	1,3-Dichlorobenzene	541-73-1	N.D.		0.50	ppb(v)	1
07275	1,4-Dichlorobenzene	106-46-7	N.D.		0.50	ppb(v)	1
07277	1,2-Dichlorobenzene	95-50-1	N.D.		0.50	ppb(v)	1
07278	Hexachloroethane	67-72-1	N.D.		0.20	ppb(v)	1
07279	1,2,4-Trichlorobenzene	120-82-1	N.D.		1.0	ppb(v)	1
07280	Hexachlorobutadiene	87-68-3	N.D.		0.50	ppb(v)	1

The sample was collected in a Tedlar bag which is not the container referenced in the EPA method.

Lancaster Laboratories

2425 New Holland Pike, PO Box 12425, Lancaster, PA 17605-2425 • 717-656-2300 Fax: 717-656-2681 • www.lancasterlabs.com

Analysis Report

Lancaster Laboratories Sample No. AQ 4572485

South_Bank_H Tedlar Bag Grab Air Sample
Site Code: SC001 RFA #: GMS05010
Dayton Thermal/Dayton, OH
Collected:07/27/2005 10:09 by GS

Account Number: 10160

Submitted: 07/28/2005 09:05
Reported: 08/01/2005 at 23:36
Discard: 10/01/2005

DaimlerChrysler Corporation
PO Box 537933
Livonia MI 48153-7933

SBHDT SDG#: DCU22-01

CAT No.	Analysis Name	CAS Number	As Received Result	As Received Method Detection Limit	Units	Dilution Factor

Laboratory Chronicle

CAT No.	Analysis Name	Method	Trial#	Analysis Date and Time	Analyst	Dilution Factor
07869	TO-14A VOA Ext. List Tedlar	EPA Method TO14A	1	07/29/2005 19:04	Douglas Graham	1

Lancaster Laboratories

2425 New Holland Pike, PO Box 12425, Lancaster, PA 17605-2425 • 717-656-2300 Fax: 717-656-2681 • www.lancasterlabs.com

Analysis Report

Lancaster Laboratories Sample No. AQ 4572486

South_Bank_I Tedlar Bag Grab Air Sample
Site Code: SC001 RFA #: GMS05010
Dayton Thermal/Dayton, OH
Collected:07/27/2005 10:30 by GS

Account Number: 10160

Submitted: 07/28/2005 09:05
Reported: 08/01/2005 at 23:36
Discard: 10/01/2005

DaimlerChrysler Corporation
PO Box 537933
Livonia MI 48153-7933

SBITB SDG#: DCU22-02

CAT No.	Analysis Name	CAS Number	As Received Result		As Received Method Detection Limit	Units	Dilution Factor
07869	TO-14A VOA Ext. List Tedlar						
02076	tert-Butyl Alcohol	75-65-0	15.		0.20	ppb(v)	1
07201	Propene	115-07-1	2.0		0.20	ppb(v)	1
07202	Dichlorodifluoromethane	75-71-8	0.90	J	0.20	ppb(v)	1
07203	Chlorodifluoromethane	75-45-6	2.0		1.0	ppb(v)	1
07204	Freon 114	76-14-2	N.D.		0.20	ppb(v)	1
07205	Chloromethane	74-87-3	0.50	J	0.20	ppb(v)	1
07206	Vinyl Chloride	75-01-4	N.D.		0.20	ppb(v)	1
07207	1,3-Butadiene	106-99-0	N.D.		1.0	ppb(v)	1
07208	Bromomethane	74-83-9	N.D.		0.20	ppb(v)	1
07209	Chloroethane	75-00-3	0.70	J	0.20	ppb(v)	1
07210	Dichlorofluoromethane	75-43-4	N.D.		0.20	ppb(v)	1
07212	Trichlorofluoromethane	75-69-4	0.40	J	0.20	ppb(v)	1
07213	Pentane	109-66-0	2.0		0.20	ppb(v)	1
07214	Acrolein	107-02-8	2.0		0.50	ppb(v)	1
07215	1,1-Dichloroethene	75-35-4	3.0		0.20	ppb(v)	1
07216	Freon 113	76-13-1	4.0		0.50	ppb(v)	1
07217	Acetone	67-64-1	30.		1.0	ppb(v)	1
07218	Methyl Iodide	74-88-4	N.D.		0.20	ppb(v)	1
07219	Carbon Disulfide	75-15-0	7.0		0.50	ppb(v)	1
07220	Acetonitrile	75-05-8	5.0		0.50	ppb(v)	1
07221	3-Chloropropene	107-05-1	N.D.		0.50	ppb(v)	1
07222	Methylene Chloride	75-09-2	8.0		0.50	ppb(v)	1
07223	Acrylonitrile	107-13-1	0.80	J	0.50	ppb(v)	1
07224	trans-1,2-Dichloroethene	156-60-5	2.0		0.20	ppb(v)	1
07225	Methyl t-Butyl Ether	1634-04-4	N.D.		0.20	ppb(v)	1
07226	Hexane	110-54-3	9.0		0.20	ppb(v)	1
07227	1,1-Dichloroethane	75-34-3	14.		0.20	ppb(v)	1
07228	Vinyl Acetate	108-05-4	0.50	J	0.20	ppb(v)	1
07230	cis-1,2-Dichloroethene	156-59-2	37.		0.20	ppb(v)	1
07231	2-Butanone	78-93-3	6.0		0.50	ppb(v)	1
07232	Ethyl Acetate	141-78-6	N.D.		0.20	ppb(v)	1
07233	Methyl Acrylate	96-33-3	N.D.		0.20	ppb(v)	1
07234	Chloroform	67-66-3	0.80	J	0.20	ppb(v)	1
07235	1,1,1-Trichloroethane	71-55-6	33.		0.20	ppb(v)	1
07236	Carbon Tetrachloride	56-23-5	N.D.		0.20	ppb(v)	1
07237	1,2-Dichloroethane	107-06-2	N.D.		0.20	ppb(v)	1
07238	Benzene	71-43-2	0.70	J	0.20	ppb(v)	1
07239	Isooctane	540-84-1	0.20	J	0.20	ppb(v)	1

Lancaster Laboratories

2425 New Holland Pike, PO Box 12425, Lancaster, PA 17605-2425 • 717-656-2300 Fax: 717-656-2681 • www.lancasterlabs.com

Analysis Report

Lancaster Laboratories Sample No. AQ 4572486

South_Bank_I Tedlar Bag Grab Air Sample
Site Code: SC001 RFA #: GMS05010
Dayton Thermal/Dayton, OH
Collected:07/27/2005 10:30 by GS

Account Number: 10160

Submitted: 07/28/2005 09:05
Reported: 08/01/2005 at 23:36
Discard: 10/01/2005

DaimlerChrysler Corporation
PO Box 537933
Livonia MI 48153-7933

SBITB SDG#: DCU22-02

CAT No.	Analysis Name	CAS Number	As Received Result		As Received Method Detection Limit	Units	Dilution Factor
07240	Heptane	142-82-5	8.0		0.20	ppb(v)	1
07241	Trichloroethene	79-01-6	190.		1.0	ppb(v)	5
07242	Ethyl Acrylate	140-88-5	N.D.		0.20	ppb(v)	1
07243	1,2-Dichloropropane	78-87-5	N.D.		0.20	ppb(v)	1
07244	Methyl Methacrylate	80-62-6	N.D.		0.20	ppb(v)	1
07245	Dibromomethane	74-95-3	N.D.		0.20	ppb(v)	1
07246	1,4-Dioxane	123-91-1	N.D.		0.20	ppb(v)	1
07247	Bromodichloromethane	75-27-4	N.D.		0.20	ppb(v)	1
07248	cis-1,3-Dichloropropene	10061-01-5	N.D.		0.20	ppb(v)	1
07249	4-Methyl-2-Pentanone	108-10-1	N.D.		0.50	ppb(v)	1
07250	Toluene	108-88-3	6.0		0.20	ppb(v)	1
07251	Octane	111-65-9	2.0		0.20	ppb(v)	1
07252	trans-1,3-Dichloropropene	10061-02-6	N.D.		0.20	ppb(v)	1
07253	Ethyl Methacrylate	97-63-2	N.D.		0.20	ppb(v)	1
07254	1,1,2-Trichloroethane	79-00-5	N.D.		0.20	ppb(v)	1
07255	Tetrachloroethene	127-18-4	45.		0.20	ppb(v)	1
07256	2-Hexanone	591-78-6	N.D.		0.50	ppb(v)	1
07257	Dibromochloromethane	124-48-1	N.D.		0.20	ppb(v)	1
07258	1,2-Dibromoethane	106-93-4	N.D.		0.20	ppb(v)	1
07259	Chlorobenzene	108-90-7	N.D.		0.20	ppb(v)	1
07260	1,1,1,2-Tetrachloroethane	630-20-6	N.D.		0.20	ppb(v)	1
07261	Ethylbenzene	100-41-4	3.0		0.20	ppb(v)	1
07262	m/p-Xylene	1330-20-7	11.		0.20	ppb(v)	1
07263	o-Xylene	95-47-6	5.0		0.20	ppb(v)	1
07264	Styrene	100-42-5	7.0		0.20	ppb(v)	1
07265	Bromoform	75-25-2	N.D.		0.20	ppb(v)	1
07266	Cumene	98-82-8	0.90	J	0.20	ppb(v)	1
07267	1,1,2,2-Tetrachloroethane	79-34-5	N.D.		0.20	ppb(v)	1
07268	1,2,3-Trichloropropane	96-18-4	N.D.		0.20	ppb(v)	1
07269	Bromobenzene	108-86-1	N.D.		0.20	ppb(v)	1
07270	4-Ethyltoluene	622-96-8	4.0		0.20	ppb(v)	1
07271	1,3,5-Trimethylbenzene	108-67-8	2.0		0.20	ppb(v)	1
07272	Alpha Methyl Styrene	98-83-9	0.50	J	0.20	ppb(v)	1
07273	1,2,4-Trimethylbenzene	95-63-6	7.0		0.20	ppb(v)	1
07274	1,3-Dichlorobenzene	541-73-1	N.D.		0.50	ppb(v)	1
07275	1,4-Dichlorobenzene	106-46-7	N.D.		0.50	ppb(v)	1
07277	1,2-Dichlorobenzene	95-50-1	N.D.		0.50	ppb(v)	1
07278	Hexachloroethane	67-72-1	N.D.		0.20	ppb(v)	1
07279	1,2,4-Trichlorobenzene	120-82-1	N.D.		1.0	ppb(v)	1
07280	Hexachlorobutadiene	87-68-3	N.D.		0.50	ppb(v)	1

The sample was collected in a Tedlar bag which is not the container referenced in the EPA method.

Lancaster Laboratories

2425 New Holland Pike, PO Box 12425, Lancaster, PA 17605-2425 • 717-656-2300 Fax: 717-656-2681 • www.lancasterlabs.com

Analysis Report

Lancaster Laboratories Sample No. AQ 4572486

South_Bank_I Tedlar Bag Grab Air Sample
Site Code: SC001 RFA #: GMS05010
Dayton Thermal/Dayton, OH
Collected:07/27/2005 10:30 by GS

Account Number: 10160

Submitted: 07/28/2005 09:05
Reported: 08/01/2005 at 23:36
Discard: 10/01/2005

DaimlerChrysler Corporation
PO Box 537933
Livonia MI 48153-7933

SBITB SDG#: DCU22-02

CAT No.	Analysis Name	CAS Number	As Received Result	As Received Method Detection Limit	Units	Dilution Factor

Laboratory Chronicle

CAT No.	Analysis Name	Method	Trial#	Analysis Date and Time	Analyst	Dilution Factor
07869	TO-14A VOA Ext. List Tedlar	EPA Method TO14A	1	07/29/2005 19:46	Douglas Graham	5
07869	TO-14A VOA Ext. List Tedlar	EPA Method TO14A	1	07/29/2005 20:27	Douglas Graham	1

Lancaster Laboratories

Analysis Report

2425 New Holland Pike, PO Box 12425, Lancaster, PA 17605-2425 • 717-656-2300 Fax: 717-656-2681 • www.lancasterlabs.com

Lancaster Laboratories Sample No. AQ 4572487

South_Bank_E Tedlar Bag Grab Air Sample
Site Code: SC001 RFA #: GMS05010
Dayton Thermal/Dayton, OH
Collected:07/27/2005 10:50 by GS

Account Number: 10160

Submitted: 07/28/2005 09:05
Reported: 08/01/2005 at 23:36
Discard: 10/01/2005

DaimlerChrysler Corporation
PO Box 537933
Livonia MI 48153-7933

SBETB SDG#: DCU22-03

CAT No.	Analysis Name	CAS Number	As Received Result		As Received Method Detection Limit	Units	Dilution Factor
07869	TO-14A VOA Ext. List Tedlar						
02076	tert-Butyl Alcohol	75-65-0	11.		0.20	ppb(v)	1
07201	Propene	115-07-1	3.0		0.20	ppb(v)	1
07202	Dichlorodifluoromethane	75-71-8	0.60	J	0.20	ppb(v)	1
07203	Chlorodifluoromethane	75-45-6	1.0		1.0	ppb(v)	1
07204	Freon 114	76-14-2	N.D.		0.20	ppb(v)	1
07205	Chloromethane	74-87-3	0.50	J	0.20	ppb(v)	1
07206	Vinyl Chloride	75-01-4	0.30	J	0.20	ppb(v)	1
07207	1,3-Butadiene	106-99-0	N.D.		1.0	ppb(v)	1
07208	Bromomethane	74-83-9	N.D.		0.20	ppb(v)	1
07209	Chloroethane	75-00-3	0.70	J	0.20	ppb(v)	1
07210	Dichlorofluoromethane	75-43-4	N.D.		0.20	ppb(v)	1
07212	Trichlorofluoromethane	75-69-4	0.30	J	0.20	ppb(v)	1
07213	Pentane	109-66-0	1.0		0.20	ppb(v)	1
07214	Acrolein	107-02-8	2.0		0.50	ppb(v)	1
07215	1,1-Dichloroethene	75-35-4	1.0		0.20	ppb(v)	1
07216	Freon 113	76-13-1	0.70	J	0.50	ppb(v)	1
07217	Acetone	67-64-1	29.		1.0	ppb(v)	1
07218	Methyl Iodide	74-88-4	N.D.		0.20	ppb(v)	1
07219	Carbon Disulfide	75-15-0	6.0		0.50	ppb(v)	1
07220	Acetonitrile	75-05-8	5.0		0.50	ppb(v)	1
07221	3-Chloropropene	107-05-1	N.D.		0.50	ppb(v)	1
07222	Methylene Chloride	75-09-2	5.0		0.50	ppb(v)	1
07223	Acrylonitrile	107-13-1	0.50	J	0.50	ppb(v)	1
07224	trans-1,2-Dichloroethene	156-60-5	0.40	J	0.20	ppb(v)	1
07225	Methyl t-Butyl Ether	1634-04-4	N.D.		0.20	ppb(v)	1
07226	Hexane	110-54-3	1.0		0.20	ppb(v)	1
07227	1,1-Dichloroethane	75-34-3	13.		0.20	ppb(v)	1
07228	Vinyl Acetate	108-05-4	N.D.		0.20	ppb(v)	1
07230	cis-1,2-Dichloroethene	156-59-2	13.		0.20	ppb(v)	1
07231	2-Butanone	78-93-3	4.0		0.50	ppb(v)	1
07232	Ethyl Acetate	141-78-6	N.D.		0.20	ppb(v)	1
07233	Methyl Acrylate	96-33-3	N.D.		0.20	ppb(v)	1
07234	Chloroform	67-66-3	0.60	J	0.20	ppb(v)	1
07235	1,1,1-Trichloroethane	71-55-6	22.		0.20	ppb(v)	1
07236	Carbon Tetrachloride	56-23-5	N.D.		0.20	ppb(v)	1
07237	1,2-Dichloroethane	107-06-2	N.D.		0.20	ppb(v)	1
07238	Benzene	71-43-2	0.80	J	0.20	ppb(v)	1
07239	Isooctane	540-84-1	0.30	J	0.20	ppb(v)	1

Lancaster Laboratories

2425 New Holland Pike, PO Box 12425, Lancaster, PA 17605-2425 • 717-656-2300 Fax: 717-656-2681 • www.lancasterlabs.com

Analysis Report

Lancaster Laboratories Sample No. AQ 4572487

South_Bank_E Tedlar Bag Grab Air Sample
Site Code: SC001 RFA #: GMS05010
Dayton Thermal/Dayton, OH
Collected:07/27/2005 10:50 by GS

Account Number: 10160

Submitted: 07/28/2005 09:05
Reported: 08/01/2005 at 23:36
Discard: 10/01/2005

DaimlerChrysler Corporation
PO Box 537933
Livonia MI 48153-7933

SBETB SDG#: DCU22-03

CAT No.	Analysis Name	CAS Number	As Received Result		As Received Method Detection Limit	Units	Dilution Factor
07240	Heptane	142-82-5	4.0		0.20	ppb(v)	1
07241	Trichloroethene	79-01-6	49.		0.20	ppb(v)	1
07242	Ethyl Acrylate	140-88-5	N.D.		0.20	ppb(v)	1
07243	1,2-Dichloropropane	78-87-5	N.D.		0.20	ppb(v)	1
07244	Methyl Methacrylate	80-62-6	N.D.		0.20	ppb(v)	1
07245	Dibromomethane	74-95-3	N.D.		0.20	ppb(v)	1
07246	1,4-Dioxane	123-91-1	N.D.		0.20	ppb(v)	1
07247	Bromodichloromethane	75-27-4	N.D.		0.20	ppb(v)	1
07248	cis-1,3-Dichloropropene	10061-01-5	N.D.		0.20	ppb(v)	1
07249	4-Methyl-2-Pentanone	108-10-1	N.D.		0.50	ppb(v)	1
07250	Toluene	108-88-3	5.0		0.20	ppb(v)	1
07251	Octane	111-65-9	1.0		0.20	ppb(v)	1
07252	trans-1,3-Dichloropropene	10061-02-6	N.D.		0.20	ppb(v)	1
07253	Ethyl Methacrylate	97-63-2	N.D.		0.20	ppb(v)	1
07254	1,1,2-Trichloroethane	79-00-5	N.D.		0.20	ppb(v)	1
07255	Tetrachloroethene	127-18-4	68.		0.20	ppb(v)	1
07256	2-Hexanone	591-78-6	N.D.		0.50	ppb(v)	1
07257	Dibromochloromethane	124-48-1	N.D.		0.20	ppb(v)	1
07258	1,2-Dibromoethane	106-93-4	N.D.		0.20	ppb(v)	1
07259	Chlorobenzene	108-90-7	0.20	J	0.20	ppb(v)	1
07260	1,1,1,2-Tetrachloroethane	630-20-6	N.D.		0.20	ppb(v)	1
07261	Ethylbenzene	100-41-4	2.0		0.20	ppb(v)	1
07262	m/p-Xylene	1330-20-7	8.0		0.20	ppb(v)	1
07263	o-Xylene	95-47-6	4.0		0.20	ppb(v)	1
07264	Styrene	100-42-5	6.0		0.20	ppb(v)	1
07265	Bromoform	75-25-2	N.D.		0.20	ppb(v)	1
07266	Cumene	98-82-8	0.70	J	0.20	ppb(v)	1
07267	1,1,2,2-Tetrachloroethane	79-34-5	N.D.		0.20	ppb(v)	1
07268	1,2,3-Trichloropropane	96-18-4	N.D.		0.20	ppb(v)	1
07269	Bromobenzene	108-86-1	N.D.		0.20	ppb(v)	1
07270	4-Ethyltoluene	622-96-8	4.0		0.20	ppb(v)	1
07271	1,3,5-Trimethylbenzene	108-67-8	2.0		0.20	ppb(v)	1
07272	Alpha Methyl Styrene	98-83-9	0.60	J	0.20	ppb(v)	1
07273	1,2,4-Trimethylbenzene	95-63-6	7.0		0.20	ppb(v)	1
07274	1,3-Dichlorobenzene	541-73-1	N.D.		0.50	ppb(v)	1
07275	1,4-Dichlorobenzene	106-46-7	N.D.		0.50	ppb(v)	1
07277	1,2-Dichlorobenzene	95-50-1	N.D.		0.50	ppb(v)	1
07278	Hexachloroethane	67-72-1	N.D.		0.20	ppb(v)	1
07279	1,2,4-Trichlorobenzene	120-82-1	N.D.		1.0	ppb(v)	1
07280	Hexachlorobutadiene	87-68-3	N.D.		0.50	ppb(v)	1

The sample was collected in a Tedlar bag which is not the container referenced in the EPA method.

Lancaster Laboratories

Analysis Report

2425 New Holland Pike, PO Box 12425, Lancaster, PA 17605-2425 • 717-656-2300 Fax: 717-656-2681 • www.lancasterlabs.com

Lancaster Laboratories Sample No. AQ 4572487

South_Bank_E Tedlar Bag Grab Air Sample
Site Code: SC001 RFA #: GMS05010
Dayton Thermal/Dayton, OH
Collected:07/27/2005 10:50 by GS

Account Number: 10160

Submitted: 07/28/2005 09:05
Reported: 08/01/2005 at 23:36
Discard: 10/01/2005

DaimlerChrysler Corporation
PO Box 537933
Livonia MI 48153-7933

SBETB SDG#: DCU22-03

CAT No.	Analysis Name	CAS Number	As Received Result	As Received Method Detection Limit	Units	Dilution Factor

Laboratory Chronicle

CAT No.	Analysis Name	Method	Trial#	Analysis Date and Time	Analyst	Dilution Factor
07869	TO-14A VOA Ext. List Tedlar	EPA Method TO14A	1	07/29/2005 21:51	Douglas Graham	1

Lancaster Laboratories

Analysis Report

2425 New Holland Pike, PO Box 12425, Lancaster, PA 17605-2425 • 717-656-2300 Fax: 717-656-2681 • www.lancasterlabs.com

Lancaster Laboratories Sample No. AQ 4572488

South_Bank_F Tedlar Bag Grab Air Sample
Site Code: SC001 RFA #: GMS05010
Dayton Thermal/Dayton, OH
Collected:07/27/2005 11:13 by GS

Account Number: 10160

Submitted: 07/28/2005 09:05
Reported: 08/01/2005 at 23:36
Discard: 10/01/2005

DaimlerChrysler Corporation
PO Box 537933
Livonia MI 48153-7933

SBFTB SDG#: DCU22-04

CAT No.	Analysis Name	CAS Number	As Received Result		As Received Method Detection Limit	Units	Dilution Factor
07869	TO-14A VOA Ext. List Tedlar						
02076	tert-Butyl Alcohol	75-65-0	9.0		0.20	ppb(v)	1
07201	Propene	115-07-1	3.0		0.20	ppb(v)	1
07202	Dichlorodifluoromethane	75-71-8	0.60	J	0.20	ppb(v)	1
07203	Chlorodifluoromethane	75-45-6	2.0		1.0	ppb(v)	1
07204	Freon 114	76-14-2	N.D.		0.20	ppb(v)	1
07205	Chloromethane	74-87-3	0.50	J	0.20	ppb(v)	1
07206	Vinyl Chloride	75-01-4	0.70	J	0.20	ppb(v)	1
07207	1,3-Butadiene	106-99-0	N.D.		1.0	ppb(v)	1
07208	Bromomethane	74-83-9	N.D.		0.20	ppb(v)	1
07209	Chloroethane	75-00-3	N.D.		0.20	ppb(v)	1
07210	Dichlorofluoromethane	75-43-4	N.D.		0.20	ppb(v)	1
07212	Trichlorofluoromethane	75-69-4	0.30	J	0.20	ppb(v)	1
07213	Pentane	109-66-0	2.0		0.20	ppb(v)	1
07214	Acrolein	107-02-8	2.0		0.50	ppb(v)	1
07215	1,1-Dichloroethene	75-35-4	3.0		0.20	ppb(v)	1
07216	Freon 113	76-13-1	3.0		0.50	ppb(v)	1
07217	Acetone	67-64-1	20.		1.0	ppb(v)	1
07218	Methyl Iodide	74-88-4	N.D.		0.20	ppb(v)	1
07219	Carbon Disulfide	75-15-0	5.0		0.50	ppb(v)	1
07220	Acetonitrile	75-05-8	5.0		0.50	ppb(v)	1
07221	3-Chloropropene	107-05-1	N.D.		0.50	ppb(v)	1
07222	Methylene Chloride	75-09-2	7.0		0.50	ppb(v)	1
07223	Acrylonitrile	107-13-1	N.D.		0.50	ppb(v)	1
07224	trans-1,2-Dichloroethene	156-60-5	1.0		0.20	ppb(v)	1
07225	Methyl t-Butyl Ether	1634-04-4	N.D.		0.20	ppb(v)	1
07226	Hexane	110-54-3	1.0		0.20	ppb(v)	1
07227	1,1-Dichloroethane	75-34-3	13.		0.20	ppb(v)	1
07228	Vinyl Acetate	108-05-4	N.D.		0.20	ppb(v)	1
07230	cis-1,2-Dichloroethene	156-59-2	34.		0.20	ppb(v)	1
07231	2-Butanone	78-93-3	3.0		0.50	ppb(v)	1
07232	Ethyl Acetate	141-78-6	N.D.		0.20	ppb(v)	1
07233	Methyl Acrylate	96-33-3	N.D.		0.20	ppb(v)	1
07234	Chloroform	67-66-3	0.70	J	0.20	ppb(v)	1
07235	1,1,1-Trichloroethane	71-55-6	32.		0.20	ppb(v)	1
07236	Carbon Tetrachloride	56-23-5	N.D.		0.20	ppb(v)	1
07237	1,2-Dichloroethane	107-06-2	N.D.		0.20	ppb(v)	1
07238	Benzene	71-43-2	0.90	J	0.20	ppb(v)	1
07239	Isooctane	540-84-1	0.20	J	0.20	ppb(v)	1

Lancaster Laboratories

2425 New Holland Pike, PO Box 12425, Lancaster, PA 17605-2425 • 717-656-2300 Fax: 717-656-2681 • www.lancasterlabs.com

Analysis Report

Lancaster Laboratories Sample No. AQ 4572488

South_Bank_F Tedlar Bag Grab Air Sample
Site Code: SC001 RFA #: GMS05010
Dayton Thermal/Dayton, OH
Collected:07/27/2005 11:13 by GS

Account Number: 10160

Submitted: 07/28/2005 09:05
Reported: 08/01/2005 at 23:36
Discard: 10/01/2005

DaimlerChrysler Corporation
PO Box 537933
Livonia MI 48153-7933

SBFTB SDG#: DCU22-04

CAT No.	Analysis Name	CAS Number	As Received Result		As Received Method Detection Limit	Units	Dilution Factor
07240	Heptane	142-82-5	2.0		0.20	ppb(v)	1
07241	Trichloroethene	79-01-6	110.		1.0	ppb(v)	5
07242	Ethyl Acrylate	140-88-5	N.D.		0.20	ppb(v)	1
07243	1,2-Dichloropropane	78-87-5	N.D.		0.20	ppb(v)	1
07244	Methyl Methacrylate	80-62-6	N.D.		0.20	ppb(v)	1
07245	Dibromomethane	74-95-3	N.D.		0.20	ppb(v)	1
07246	1,4-Dioxane	123-91-1	N.D.		0.20	ppb(v)	1
07247	Bromodichloromethane	75-27-4	N.D.		0.20	ppb(v)	1
07248	cis-1,3-Dichloropropene	10061-01-5	N.D.		0.20	ppb(v)	1
07249	4-Methyl-2-Pentanone	108-10-1	N.D.		0.50	ppb(v)	1
07250	Toluene	108-88-3	4.0		0.20	ppb(v)	1
07251	Octane	111-65-9	0.80	J	0.20	ppb(v)	1
07252	trans-1,3-Dichloropropene	10061-02-6	N.D.		0.20	ppb(v)	1
07253	Ethyl Methacrylate	97-63-2	N.D.		0.20	ppb(v)	1
07254	1,1,2-Trichloroethane	79-00-5	N.D.		0.20	ppb(v)	1
07255	Tetrachloroethene	127-18-4	230.		1.0	ppb(v)	5
07256	2-Hexanone	591-78-6	N.D.		0.50	ppb(v)	1
07257	Dibromochloromethane	124-48-1	N.D.		0.20	ppb(v)	1
07258	1,2-Dibromoethane	106-93-4	N.D.		0.20	ppb(v)	1
07259	Chlorobenzene	108-90-7	N.D.		0.20	ppb(v)	1
07260	1,1,1,2-Tetrachloroethane	630-20-6	N.D.		0.20	ppb(v)	1
07261	Ethylbenzene	100-41-4	2.0		0.20	ppb(v)	1
07262	m/p-Xylene	1330-20-7	5.0		0.20	ppb(v)	1
07263	o-Xylene	95-47-6	3.0		0.20	ppb(v)	1
07264	Styrene	100-42-5	3.0		0.20	ppb(v)	1
07265	Bromoform	75-25-2	N.D.		0.20	ppb(v)	1
07266	Cumene	98-82-8	0.50	J	0.20	ppb(v)	1
07267	1,1,2,2-Tetrachloroethane	79-34-5	N.D.		0.20	ppb(v)	1
07268	1,2,3-Trichloropropane	96-18-4	N.D.		0.20	ppb(v)	1
07269	Bromobenzene	108-86-1	N.D.		0.20	ppb(v)	1
07270	4-Ethyltoluene	622-96-8	2.0		0.20	ppb(v)	1
07271	1,3,5-Trimethylbenzene	108-67-8	1.0		0.20	ppb(v)	1
07272	Alpha Methyl Styrene	98-83-9	0.40	J	0.20	ppb(v)	1
07273	1,2,4-Trimethylbenzene	95-63-6	4.0		0.20	ppb(v)	1
07274	1,3-Dichlorobenzene	541-73-1	N.D.		0.50	ppb(v)	1
07275	1,4-Dichlorobenzene	106-46-7	N.D.		0.50	ppb(v)	1
07277	1,2-Dichlorobenzene	95-50-1	N.D.		0.50	ppb(v)	1
07278	Hexachloroethane	67-72-1	N.D.		0.20	ppb(v)	1
07279	1,2,4-Trichlorobenzene	120-82-1	N.D.		1.0	ppb(v)	1
07280	Hexachlorobutadiene	87-68-3	N.D.		0.50	ppb(v)	1

The sample was collected in a Tedlar bag which is not the container referenced in the EPA method.

Lancaster Laboratories

2425 New Holland Pike, PO Box 12425, Lancaster, PA 17605-2425 • 717-656-2300 Fax: 717-656-2681 • www.lancasterlabs.com

Analysis Report

Lancaster Laboratories Sample No. AQ 4572488

South_Bank_F Tedlar Bag Grab Air Sample
Site Code: SC001 RFA #: GMS05010
Dayton Thermal/Dayton, OH
Collected:07/27/2005 11:13 by GS

Account Number: 10160

Submitted: 07/28/2005 09:05
Reported: 08/01/2005 at 23:36
Discard: 10/01/2005

DaimlerChrysler Corporation
PO Box 537933
Livonia MI 48153-7933

SBFTB SDG#: DCU22-04

CAT No.	Analysis Name	CAS Number	As Received Result	As Received Method Detection Limit	Units	Dilution Factor

Laboratory Chronicle

CAT No.	Analysis Name	Method	Trial#	Analysis Date and Time	Analyst	Dilution Factor
07869	TO-14A VOA Ext. List Tedlar	EPA Method TO14A	1	07/29/2005 22:32	Douglas Graham	5
07869	TO-14A VOA Ext. List Tedlar	EPA Method TO14A	1	07/29/2005 23:14	Douglas Graham	1

Lancaster Laboratories

Analysis Report

2425 New Holland Pike, PO Box 12425, Lancaster, PA 17605-2425 • 717-656-2300 Fax: 717-656-2681 • www.lancasterlabs.com

Lancaster Laboratories Sample No. AQ 4572489

South_Bank_G Tedlar Bag Grab Air Sample
Site Code: SC001 RFA #: GMS05010
Dayton Thermal/Dayton, OH
Collected:07/27/2005 11:35 by GS

Account Number: 10160

Submitted: 07/28/2005 09:05
Reported: 08/01/2005 at 23:37
Discard: 10/01/2005

DaimlerChrysler Corporation
PO Box 537933
Livonia MI 48153-7933

SBGTB SDG#: DCU22-05

CAT No.	Analysis Name	CAS Number	As Received Result		As Received Method Detection Limit	Units	Dilution Factor
07869	TO-14A VOA Ext. List Tedlar						
02076	tert-Butyl Alcohol	75-65-0	7.0		0.20	ppb(v)	1
07201	Propene	115-07-1	2.0		0.20	ppb(v)	1
07202	Dichlorodifluoromethane	75-71-8	0.60	J	0.20	ppb(v)	1
07203	Chlorodifluoromethane	75-45-6	1.0		1.0	ppb(v)	1
07204	Freon 114	76-14-2	N.D.		0.20	ppb(v)	1
07205	Chloromethane	74-87-3	0.50	J	0.20	ppb(v)	1
07206	Vinyl Chloride	75-01-4	N.D.		0.20	ppb(v)	1
07207	1,3-Butadiene	106-99-0	N.D.		1.0	ppb(v)	1
07208	Bromomethane	74-83-9	N.D.		0.20	ppb(v)	1
07209	Chloroethane	75-00-3	2.0		0.20	ppb(v)	1
07210	Dichlorofluoromethane	75-43-4	N.D.		0.20	ppb(v)	1
07212	Trichlorofluoromethane	75-69-4	0.40	J	0.20	ppb(v)	1
07213	Pentane	109-66-0	1.0		0.20	ppb(v)	1
07214	Acrolein	107-02-8	2.0		0.50	ppb(v)	1
07215	1,1-Dichloroethene	75-35-4	13.		0.20	ppb(v)	1
07216	Freon 113	76-13-1	5.0		0.50	ppb(v)	1
07217	Acetone	67-64-1	20.		1.0	ppb(v)	1
07218	Methyl Iodide	74-88-4	N.D.		0.20	ppb(v)	1
07219	Carbon Disulfide	75-15-0	7.0		0.50	ppb(v)	1
07220	Acetonitrile	75-05-8	5.0		0.50	ppb(v)	1
07221	3-Chloropropene	107-05-1	N.D.		0.50	ppb(v)	1
07222	Methylene Chloride	75-09-2	6.0		0.50	ppb(v)	1
07223	Acrylonitrile	107-13-1	N.D.		0.50	ppb(v)	1
07224	trans-1,2-Dichloroethene	156-60-5	1.0		0.20	ppb(v)	1
07225	Methyl t-Butyl Ether	1634-04-4	N.D.		0.20	ppb(v)	1
07226	Hexane	110-54-3	2.0		0.20	ppb(v)	1
07227	1,1-Dichloroethane	75-34-3	20.		0.20	ppb(v)	1
07228	Vinyl Acetate	108-05-4	N.D.		0.20	ppb(v)	1
07230	cis-1,2-Dichloroethene	156-59-2	61.		0.20	ppb(v)	1
07231	2-Butanone	78-93-3	4.0		0.50	ppb(v)	1
07232	Ethyl Acetate	141-78-6	N.D.		0.20	ppb(v)	1
07233	Methyl Acrylate	96-33-3	N.D.		0.20	ppb(v)	1
07234	Chloroform	67-66-3	0.40	J	0.20	ppb(v)	1
07235	1,1,1-Trichloroethane	71-55-6	84.		0.20	ppb(v)	1
07236	Carbon Tetrachloride	56-23-5	N.D.		0.20	ppb(v)	1
07237	1,2-Dichloroethane	107-06-2	N.D.		0.20	ppb(v)	1
07238	Benzene	71-43-2	0.80	J	0.20	ppb(v)	1
07239	Isooctane	540-84-1	0.30	J	0.20	ppb(v)	1

Lancaster Laboratories

2425 New Holland Pike, PO Box 12425. Lancaster, PA 17605-2425 • 717-656-2300 Fax: 717-656-2681 • www.lancasterlabs.com

Analysis Report

Lancaster Laboratories Sample No. AQ 4572489

South_Bank_G Tedlar Bag Grab Air Sample
Site Code: SC001 RFA #: GMS05010
Dayton Thermal/Dayton, OH
Collected:07/27/2005 11:35 by GS

Account Number: 10160

Submitted: 07/28/2005 09:05
Reported: 08/01/2005 at 23:37
Discard: 10/01/2005

DaimlerChrysler Corporation
PO Box 537933
Livonia MI 48153-7933

SBGTB SDG#: DCU22-05

CAT No.	Analysis Name	CAS Number	As Received Result		As Received Method Detection Limit	Units	Dilution Factor
07240	Heptane	142-82-5	2.0		0.20	ppb(v)	1
07241	Trichloroethene	79-01-6	160.		1.0	ppb(v)	5
07242	Ethyl Acrylate	140-88-5	N.D.		0.20	ppb(v)	1
07243	1,2-Dichloropropane	78-87-5	N.D.		0.20	ppb(v)	1
07244	Methyl Methacrylate	80-62-6	N.D.		0.20	ppb(v)	1
07245	Dibromomethane	74-95-3	N.D.		0.20	ppb(v)	1
07246	1,4-Dioxane	123-91-1	N.D.		0.20	ppb(v)	1
07247	Bromodichloromethane	75-27-4	N.D.		0.20	ppb(v)	1
07248	cis-1,3-Dichloropropene	10061-01-5	N.D.		0.20	ppb(v)	1
07249	4-Methyl-2-Pentanone	108-10-1	N.D.		0.50	ppb(v)	1
07250	Toluene	108-88-3	4.0		0.20	ppb(v)	1
07251	Octane	111-65-9	0.50	J	0.20	ppb(v)	1
07252	trans-1,3-Dichloropropene	10061-02-6	N.D.		0.20	ppb(v)	1
07253	Ethyl Methacrylate	97-63-2	N.D.		0.20	ppb(v)	1
07254	1,1,2-Trichloroethane	79-00-5	N.D.		0.20	ppb(v)	1
07255	Tetrachloroethene	127-18-4	90.		0.20	ppb(v)	1
07256	2-Hexanone	591-78-6	N.D.		0.50	ppb(v)	1
07257	Dibromochloromethane	124-48-1	N.D.		0.20	ppb(v)	1
07258	1,2-Dibromoethane	106-93-4	N.D.		0.20	ppb(v)	1
07259	Chlorobenzene	108-90-7	N.D.		0.20	ppb(v)	1
07260	1,1,1,2-Tetrachloroethane	630-20-6	N.D.		0.20	ppb(v)	1
07261	Ethylbenzene	100-41-4	1.0		0.20	ppb(v)	1
07262	m/p-Xylene	1330-20-7	4.0		0.20	ppb(v)	1
07263	o-Xylene	95-47-6	2.0		0.20	ppb(v)	1
07264	Styrene	100-42-5	3.0		0.20	ppb(v)	1
07265	Bromoform	75-25-2	N.D.		0.20	ppb(v)	1
07266	Cumene	98-82-8	0.40	J	0.20	ppb(v)	1
07267	1,1,2,2-Tetrachloroethane	79-34-5	N.D.		0.20	ppb(v)	1
07268	1,2,3-Trichloropropane	96-18-4	N.D.		0.20	ppb(v)	1
07269	Bromobenzene	108-86-1	N.D.		0.20	ppb(v)	1
07270	4-Ethyltoluene	622-96-8	2.0		0.20	ppb(v)	1
07271	1,3,5-Trimethylbenzene	108-67-8	1.0		0.20	ppb(v)	1
07272	Alpha Methyl Styrene	98-83-9	0.30	J	0.20	ppb(v)	1
07273	1,2,4-Trimethylbenzene	95-63-6	4.0		0.20	ppb(v)	1
07274	1,3-Dichlorobenzene	541-73-1	N.D.		0.50	ppb(v)	1
07275	1,4-Dichlorobenzene	106-46-7	N.D.		0.50	ppb(v)	1
07277	1,2-Dichlorobenzene	95-50-1	N.D.		0.50	ppb(v)	1
07278	Hexachloroethane	67-72-1	N.D.		0.20	ppb(v)	1
07279	1,2,4-Trichlorobenzene	120-82-1	N.D.		1.0	ppb(v)	1
07280	Hexachlorobutadiene	87-68-3	N.D.		0.50	ppb(v)	1

The sample was collected in a Tedlar bag which is not the container referenced in the EPA method.

Lancaster Laboratories

2425 New Holland Pike, PO Box 12425, Lancaster, PA 17605-2425 • 717-656-2300 Fax: 717-656-2681 • www.lancasterlabs.com

Analysis Repor

Lancaster Laboratories Sample No. AQ 4572489

South Bank G Tedlar Bag Grab Air Sample
Site Code: SC001 RFA #: GMS05010
Dayton Thermal/Dayton, OH
Collected:07/27/2005 11:35 by GS

Account Number: 10160

Submitted: 07/28/2005 09:05
Reported: 08/01/2005 at 23:37
Discard: 10/01/2005

DaimlerChrysler Corporation
PO Box 537933
Livonia MI 48153-7933

SBGTB SDG#: DCU22-05

CAT No.	Analysis Name	CAS Number	As Received Result	As Received Method Detection Limit	Units	Dilution Factor

Laboratory Chronicle

CAT No.	Analysis Name	Method	Trial#	Analysis Date and Time	Analyst	Dilution Factor
07869	TO-14A VOA Ext. List Tedlar	EPA Method TO14A	1	07/29/2005 23:55	Douglas Graham	5
07869	TO-14A VOA Ext. List Tedlar	EPA Method TO14A	1	07/30/2005 00:37	Douglas Graham	1

Lancaster Laboratories

Analysis Report

2425 New Holland Pike, PO Box 12425, Lancaster, PA 17605-2425 • 717-656-2300 Fax: 717-656-2681 • www.lancasterlabs.com

Lancaster Laboratories Sample No. AQ 4572490

North_Bank_6 Tedlar Bag Grab Air Sample
Site Code: SC001 RFA #: GMS05010
Dayton Thermal/Dayton, OH
Collected:07/27/2005 13:20 by GS

Account Number: 10160

Submitted: 07/28/2005 09:05
Reported: 08/01/2005 at 23:37
Discard: 10/01/2005

DaimlerChrysler Corporation
PO Box 537933
Livonia MI 48153-7933

NB6TB SDG#: DCU22-06

CAT No.	Analysis Name	CAS Number	As Received Result		As Received Method Detection Limit	Units	Dilution Factor
07869	TO-14A VOA Ext. List Tedlar						
02076	tert-Butyl Alcohol	75-65-0	8.0		0.50	ppb(v)	2.5
07201	Propene	115-07-1	2.0	J	0.50	ppb(v)	2.5
07202	Dichlorodifluoromethane	75-71-8	1.0	J	0.50	ppb(v)	2.5
07203	Chlorodifluoromethane	75-45-6	5.0		3.0	ppb(v)	2.5
07204	Freon 114	76-14-2	N.D.		0.50	ppb(v)	2.5
07205	Chloromethane	74-87-3	N.D.		0.50	ppb(v)	2.5
07206	Vinyl Chloride	75-01-4	1.0	J	0.50	ppb(v)	2.5
07207	1,3-Butadiene	106-99-0	N.D.		3.0	ppb(v)	2.5
07208	Bromomethane	74-83-9	N.D.		0.50	ppb(v)	2.5
07209	Chloroethane	75-00-3	N.D.		0.50	ppb(v)	2.5
07210	Dichlorofluoromethane	75-43-4	N.D.		0.50	ppb(v)	2.5
07212	Trichlorofluoromethane	75-69-4	1.0	J	0.50	ppb(v)	2.5
07213	Pentane	109-66-0	3.0		0.50	ppb(v)	2.5
07214	Acrolein	107-02-8	3.0		1.0	ppb(v)	2.5
07215	1,1-Dichloroethene	75-35-4	7.0		0.50	ppb(v)	2.5
07216	Freon 113	76-13-1	4.0		1.0	ppb(v)	2.5
07217	Acetone	67-64-1	34.		3.0	ppb(v)	2.5
07218	Methyl Iodide	74-88-4	N.D.		0.50	ppb(v)	2.5
07219	Carbon Disulfide	75-15-0	13.		1.0	ppb(v)	2.5
07220	Acetonitrile	75-05-8	7.0		1.0	ppb(v)	2.5
07221	3-Chloropropene	107-05-1	N.D.		1.0	ppb(v)	2.5
07222	Methylene Chloride	75-09-2	8.0		1.0	ppb(v)	2.5
07223	Acrylonitrile	107-13-1	N.D.		1.0	ppb(v)	2.5
07224	trans-1,2-Dichloroethene	156-60-5	4.0		0.50	ppb(v)	2.5
07225	Methyl t-Butyl Ether	1634-04-4	N.D.		0.50	ppb(v)	2.5
07226	Hexane	110-54-3	3.0		0.50	ppb(v)	2.5
07227	1,1-Dichloroethane	75-34-3	14.		0.50	ppb(v)	2.5
07228	Vinyl Acetate	108-05-4	N.D.		0.50	ppb(v)	2.5
07230	cis-1,2-Dichloroethene	156-59-2	41.		0.50	ppb(v)	2.5
07231	2-Butanone	78-93-3	5.0		1.0	ppb(v)	2.5
07232	Ethyl Acetate	141-78-6	N.D.		0.50	ppb(v)	2.5
07233	Methyl Acrylate	96-33-3	N.D.		0.50	ppb(v)	2.5
07234	Chloroform	67-66-3	3.0		0.50	ppb(v)	2.5
07235	1,1,1-Trichloroethane	71-55-6	120.		0.50	ppb(v)	2.5
07236	Carbon Tetrachloride	56-23-5	N.D.		0.50	ppb(v)	2.5
07237	1,2-Dichloroethane	107-06-2	N.D.		0.50	ppb(v)	2.5
07238	Benzene	71-43-2	0.90	J	0.50	ppb(v)	2.5
07239	Isooctane	540-84-1	N.D.		0.50	ppb(v)	2.5

Lancaster Laboratories

2425 New Holland Pike, PO Box 12425, Lancaster, PA 17605-2425 • 717-656-2300 Fax: 717-656-2681 • www.lancasterlabs.com

Analysis Report

Lancaster Laboratories Sample No. AQ 4572490

North_Bank_6 Tedlar Bag Grab Air Sample
Site Code: SC001 RFA #: GMS05010
Dayton Thermal/Dayton, OH
Collected:07/27/2005 13:20 by GS

Account Number: 10160

Submitted: 07/28/2005 09:05
Reported: 08/01/2005 at 23:37
Discard: 10/01/2005

DaimlerChrysler Corporation
PO Box 537933
Livonia MI 48153-7933

NB6TB SDG#: DCU22-06

CAT No.	Analysis Name	CAS Number	As Received Result		As Received Method Detection Limit	Units	Dilution Factor
07240	Heptane	142-82-5	1.0	J	0.50	ppb(v)	2.5
07241	Trichloroethene	79-01-6	160.		0.50	ppb(v)	2.5
07242	Ethyl Acrylate	140-88-5	N.D.		0.50	ppb(v)	2.5
07243	1,2-Dichloropropane	78-87-5	N.D.		0.50	ppb(v)	2.5
07244	Methyl Methacrylate	80-62-6	N.D.		0.50	ppb(v)	2.5
07245	Dibromomethane	74-95-3	N.D.		0.50	ppb(v)	2.5
07246	1,4-Dioxane	123-91-1	N.D.		0.50	ppb(v)	2.5
07247	Bromodichloromethane	75-27-4	N.D.		0.50	ppb(v)	2.5
07248	cis-1,3-Dichloropropene	10061-01-5	N.D.		0.50	ppb(v)	2.5
07249	4-Methyl-2-Pentanone	108-10-1	N.D.		1.0	ppb(v)	2.5
07250	Toluene	108-88-3	7.0		0.50	ppb(v)	2.5
07251	Octane	111-65-9	0.90	J	0.50	ppb(v)	2.5
07252	trans-1,3-Dichloropropene	10061-02-6	N.D.		0.50	ppb(v)	2.5
07253	Ethyl Methacrylate	97-63-2	N.D.		0.50	ppb(v)	2.5
07254	1,1,2-Trichloroethane	79-00-5	N.D.		0.50	ppb(v)	2.5
07255	Tetrachloroethene	127-18-4	450.		5.0	ppb(v)	25
07256	2-Hexanone	591-78-6	N.D.		1.0	ppb(v)	2.5
07257	Dibromochloromethane	124-48-1	N.D.		0.50	ppb(v)	2.5
07258	1,2-Dibromoethane	106-93-4	N.D.		0.50	ppb(v)	2.5
07259	Chlorobenzene	108-90-7	N.D.		0.50	ppb(v)	2.5
07260	1,1,1,2-Tetrachloroethane	630-20-6	N.D.		0.50	ppb(v)	2.5
07261	Ethylbenzene	100-41-4	2.0	J	0.50	ppb(v)	2.5
07262	m/p-Xylene	1330-20-7	6.0		0.50	ppb(v)	2.5
07263	o-Xylene	95-47-6	3.0		0.50	ppb(v)	2.5
07264	Styrene	100-42-5	3.0		0.50	ppb(v)	2.5
07265	Bromoform	75-25-2	N.D.		0.50	ppb(v)	2.5
07266	Cumene	98-82-8	N.D.		0.50	ppb(v)	2.5
07267	1,1,2,2-Tetrachloroethane	79-34-5	N.D.		0.50	ppb(v)	2.5
07268	1,2,3-Trichloropropane	96-18-4	0.80	J	0.50	ppb(v)	2.5
07269	Bromobenzene	108-86-1	N.D.		0.50	ppb(v)	2.5
07270	4-Ethyltoluene	622-96-8	2.0	J	0.50	ppb(v)	2.5
07271	1,3,5-Trimethylbenzene	108-67-8	1.0	J	0.50	ppb(v)	2.5
07272	Alpha Methyl Styrene	98-83-9	N.D.		0.50	ppb(v)	2.5
07273	1,2,4-Trimethylbenzene	95-63-6	4.0		0.50	ppb(v)	2.5
07274	1,3-Dichlorobenzene	541-73-1	N.D.		1.0	ppb(v)	2.5
07275	1,4-Dichlorobenzene	106-46-7	N.D.		1.0	ppb(v)	2.5
07277	1,2-Dichlorobenzene	95-50-1	N.D.		1.0	ppb(v)	2.5
07278	Hexachloroethane	67-72-1	N.D.		0.50	ppb(v)	2.5
07279	1,2,4-Trichlorobenzene	120-82-1	N.D.		3.0	ppb(v)	2.5
07280	Hexachlorobutadiene	87-68-3	N.D.		1.0	ppb(v)	2.5

The sample was collected in a Tedlar bag which is not the container referenced in the EPA method.

Lancaster Laboratories

2425 New Holland Pike, PO Box 12425, Lancaster, PA 17605-2425 • 717-656-2300 Fax: 717-656-2681 • www.lancasterlabs.com

Analysis Report

Lancaster Laboratories Sample No. AQ 4572490

North_Bank_6 Tedlar Bag Grab Air Sample
Site Code: SC001 RFA #: GMS05010
Dayton Thermal/Dayton, OH
Collected:07/27/2005 13:20 by GS

Account Number: 10160

Submitted: 07/28/2005 09:05
Reported: 08/01/2005 at 23:37
Discard: 10/01/2005

DaimlerChrysler Corporation
PO Box 537933
Livonia MI 48153-7933

NB6TB SDG#: DCU22-06

CAT No.	Analysis Name	CAS Number	As Received Result	As Received Method Detection Limit	Units	Dilution Factor

The reporting limits for the GC/MS volatile compounds were raised because sample dilution was necessary to bring target compounds into the calibration range of the system.

Laboratory Chronicle

CAT No.	Analysis Name	Method	Trial#	Analysis Date and Time	Analyst	Dilution Factor
07869	TO-14A VOA Ext. List Tedlar	EPA Method TO14A	1	07/30/2005 01:18	Douglas Graham	25
07869	TO-14A VOA Ext. List Tedlar	EPA Method TO14A	1	07/30/2005 01:59	Douglas Graham	2.5

Lancaster Laboratories

2425 New Holland Pike, PO Box 12425, Lancaster, PA 17605-2425 • 717-656-2300 Fax: 717-656-2681 • www.lancasterlabs.com

Analysis Report

Lancaster Laboratories Sample No. AQ 4572491

North_Bank_2 Tedlar Bag Grab Air Sample
Site Code: SC001 RFA #: GMS05010
Dayton Thermal/Dayton, OH
Collected:07/27/2005 13:41 by GS

Account Number: 10160

Submitted: 07/28/2005 09:05
Reported: 08/01/2005 at 23:37
Discard: 10/01/2005

DaimlerChrysler Corporation
PO Box 537933
Livonia MI 48153-7933

NB2TB SDG#: DCU22-07

CAT No.	Analysis Name	CAS Number	As Received Result		As Received Method Detection Limit	Units	Dilution Factor
07869	TO-14A VOA Ext. List Tedlar						
02076	tert-Butyl Alcohol	75-65-0	6.0		0.50	ppb(v)	2.5
07201	Propene	115-07-1	2.0	J	0.50	ppb(v)	2.5
07202	Dichlorodifluoromethane	75-71-8	0.60	J	0.50	ppb(v)	2.5
07203	Chlorodifluoromethane	75-45-6	N.D.		3.0	ppb(v)	2.5
07204	Freon 114	76-14-2	N.D.		0.50	ppb(v)	2.5
07205	Chloromethane	74-87-3	N.D.		0.50	ppb(v)	2.5
07206	Vinyl Chloride	75-01-4	2.0	J	0.50	ppb(v)	2.5
07207	1,3-Butadiene	106-99-0	N.D.		3.0	ppb(v)	2.5
07208	Bromomethane	74-83-9	N.D.		0.50	ppb(v)	2.5
07209	Chloroethane	75-00-3	2.0	J	0.50	ppb(v)	2.5
07210	Dichlorofluoromethane	75-43-4	N.D.		0.50	ppb(v)	2.5
07212	Trichlorofluoromethane	75-69-4	4.0		0.50	ppb(v)	2.5
07213	Pentane	109-66-0	2.0	J	0.50	ppb(v)	2.5
07214	Acrolein	107-02-8	2.0	J	1.0	ppb(v)	2.5
07215	1,1-Dichloroethene	75-35-4	9.0		0.50	ppb(v)	2.5
07216	Freon 113	76-13-1	1.0	J	1.0	ppb(v)	2.5
07217	Acetone	67-64-1	30.		3.0	ppb(v)	2.5
07218	Methyl Iodide	74-88-4	N.D.		0.50	ppb(v)	2.5
07219	Carbon Disulfide	75-15-0	22.		1.0	ppb(v)	2.5
07220	Acetonitrile	75-05-8	13.		1.0	ppb(v)	2.5
07221	3-Chloropropene	107-05-1	N.D.		1.0	ppb(v)	2.5
07222	Methylene Chloride	75-09-2	6.0		1.0	ppb(v)	2.5
07223	Acrylonitrile	107-13-1	N.D.		1.0	ppb(v)	2.5
07224	trans-1,2-Dichloroethene	156-60-5	3.0		0.50	ppb(v)	2.5
07225	Methyl t-Butyl Ether	1634-04-4	N.D.		0.50	ppb(v)	2.5
07226	Hexane	110-54-3	5.0		0.50	ppb(v)	2.5
07227	1,1-Dichloroethane	75-34-3	24.		0.50	ppb(v)	2.5
07228	Vinyl Acetate	108-05-4	N.D.		0.50	ppb(v)	2.5
07230	cis-1,2-Dichloroethene	156-59-2	97.		0.50	ppb(v)	2.5
07231	2-Butanone	78-93-3	6.0		1.0	ppb(v)	2.5
07232	Ethyl Acetate	141-78-6	N.D.		0.50	ppb(v)	2.5
07233	Methyl Acrylate	96-33-3	N.D.		0.50	ppb(v)	2.5
07234	Chloroform	67-66-3	3.0		0.50	ppb(v)	2.5
07235	1,1,1-Trichloroethane	71-55-6	190.		0.50	ppb(v)	2.5
07236	Carbon Tetrachloride	56-23-5	0.90	J	0.50	ppb(v)	2.5
07237	1,2-Dichloroethane	107-06-2	N.D.		0.50	ppb(v)	2.5
07238	Benzene	71-43-2	0.60	J	0.50	ppb(v)	2.5
07239	Isooctane	540-84-1	N.D.		0.50	ppb(v)	2.5

Lancaster Laboratories

2425 New Holland Pike, PO Box 12425, Lancaster, PA 17605-2425 • 717-656-2300 Fax: 717-656-2681 • www.lancasterlabs.com

Analysis Report

Lancaster Laboratories Sample No. AQ 4572491

North_Bank_2 Tedlar Bag Grab Air Sample
Site Code: SC001 RFA #: GMS05010
Dayton Thermal/Dayton, OH
Collected:07/27/2005 13:41 by GS

Account Number: 10160

Submitted: 07/28/2005 09:05
Reported: 08/01/2005 at 23:37
Discard: 10/01/2005

DaimlerChrysler Corporation
PO Box 537933
Livonia MI 48153-7933

NB2TB SDG#: DCU22-07

CAT No.	Analysis Name	CAS Number	As Received Result		As Received Method Detection Limit	Units	Dilution Factor
07240	Heptane	142-82-5	1.0	J	0.50	ppb(v)	2.5
07241	Trichloroethene	79-01-6	180.		0.50	ppb(v)	2.5
07242	Ethyl Acrylate	140-88-5	N.D.		0.50	ppb(v)	2.5
07243	1,2-Dichloropropane	78-87-5	N.D.		0.50	ppb(v)	2.5
07244	Methyl Methacrylate	80-62-6	N.D.		0.50	ppb(v)	2.5
07245	Dibromomethane	74-95-3	N.D.		0.50	ppb(v)	2.5
07246	1,4-Dioxane	123-91-1	N.D.		0.50	ppb(v)	2.5
07247	Bromodichloromethane	75-27-4	N.D.		0.50	ppb(v)	2.5
07248	cis-1,3-Dichloropropene	10061-01-5	N.D.		0.50	ppb(v)	2.5
07249	4-Methyl-2-Pentanone	108-10-1	N.D.		1.0	ppb(v)	2.5
07250	Toluene	108-88-3	9.0		0.50	ppb(v)	2.5
07251	Octane	111-65-9	3.0		0.50	ppb(v)	2.5
07252	trans-1,3-Dichloropropene	10061-02-6	N.D.		0.50	ppb(v)	2.5
07253	Ethyl Methacrylate	97-63-2	N.D.		0.50	ppb(v)	2.5
07254	1,1,2-Trichloroethane	79-00-5	N.D.		0.50	ppb(v)	2.5
07255	Tetrachloroethene	127-18-4	480.		5.0	ppb(v)	25
07256	2-Hexanone	591-78-6	N.D.		1.0	ppb(v)	2.5
07257	Dibromochloromethane	124-48-1	N.D.		0.50	ppb(v)	2.5
07258	1,2-Dibromoethane	106-93-4	N.D.		0.50	ppb(v)	2.5
07259	Chlorobenzene	108-90-7	N.D.		0.50	ppb(v)	2.5
07260	1,1,1,2-Tetrachloroethane	630-20-6	N.D.		0.50	ppb(v)	2.5
07261	Ethylbenzene	100-41-4	1.0	J	0.50	ppb(v)	2.5
07262	m/p-Xylene	1330-20-7	4.0		0.50	ppb(v)	2.5
07263	o-Xylene	95-47-6	2.0	J	0.50	ppb(v)	2.5
07264	Styrene	100-42-5	2.0	J	0.50	ppb(v)	2.5
07265	Bromoform	75-25-2	N.D.		0.50	ppb(v)	2.5
07266	Cumene	98-82-8	N.D.		0.50	ppb(v)	2.5
07267	1,1,2,2-Tetrachloroethane	79-34-5	N.D.		0.50	ppb(v)	2.5
07268	1,2,3-Trichloropropane	96-18-4	N.D.		0.50	ppb(v)	2.5
07269	Bromobenzene	108-86-1	N.D.		0.50	ppb(v)	2.5
07270	4-Ethyltoluene	622-96-8	2.0	J	0.50	ppb(v)	2.5
07271	1,3,5-Trimethylbenzene	108-67-8	1.0	J	0.50	ppb(v)	2.5
07272	Alpha Methyl Styrene	98-83-9	N.D.		0.50	ppb(v)	2.5
07273	1,2,4-Trimethylbenzene	95-63-6	3.0		0.50	ppb(v)	2.5
07274	1,3-Dichlorobenzene	541-73-1	N.D.		1.0	ppb(v)	2.5
07275	1,4-Dichlorobenzene	106-46-7	N.D.		1.0	ppb(v)	2.5
07277	1,2-Dichlorobenzene	95-50-1	N.D.		1.0	ppb(v)	2.5
07278	Hexachloroethane	67-72-1	N.D.		0.50	ppb(v)	2.5
07279	1,2,4-Trichlorobenzene	120-82-1	N.D.		3.0	ppb(v)	2.5
07280	Hexachlorobutadiene	87-68-3	N.D.		1.0	ppb(v)	2.5

The sample was collected in a Tedlar bag which is not the container referenced in the EPA method.

Lancaster Laboratories

2425 New Holland Pike, PO Box 12425, Lancaster, PA 17605-2425 • 717-656-2300 Fax: 717-656-2681 • www.lancasterlabs.com

Analysis Report

Lancaster Laboratories Sample No. AQ 4572491

North_Bank_2 Tedlar Bag Grab Air Sample
Site Code: SC001 RFA #: GMS05010
Dayton Thermal/Dayton, OH
Collected:07/27/2005 13:41 by GS

Account Number: 10160

Submitted: 07/28/2005 09:05
Reported: 08/01/2005 at 23:37
Discard: 10/01/2005

DaimlerChrysler Corporation
PO Box 537933
Livonia MI 48153-7933

NB2TB SDG#: DCU22-07

CAT No.	Analysis Name	CAS Number	As Received Result	As Received Method Detection Limit	Units	Dilution Factor

The reporting limits for the GC/MS volatile compounds were raised because sample dilution was necessary to bring target compounds into the calibration range of the system.

Laboratory Chronicle

CAT No.	Analysis Name	Method	Trial#	Analysis Date and Time	Analyst	Dilution Factor
07869	TO-14A VOA Ext. List Tedlar	EPA Method TO14A	1	07/30/2005 02:41	Douglas Graham	25
07869	TO-14A VOA Ext. List Tedlar	EPA Method TO14A	1	07/30/2005 03:22	Douglas Graham	2.5

Lancaster Laboratories

Analysis Report

2425 New Holland Pike, PO Box 12425, Lancaster, PA 17605-2425 • 717-656-2300 Fax: 717-656-2681 • www.lancasterlabs.com

Lancaster Laboratories Sample No. AQ 4572492

North_Bank_3 Tedlar Bag Grab Air Sample
Site Code: SC001 RFA #: GMS05010
Dayton Thermal/Dayton, OH
Collected:07/27/2005 14:05 by GS

Account Number: 10160

Submitted: 07/28/2005 09:05
Reported: 08/01/2005 at 23:37
Discard: 10/01/2005

DaimlerChrysler Corporation
PO Box 537933
Livonia MI 48153-7933

NB3TB SDG#: DCU22-08

CAT No.	Analysis Name	CAS Number	As Received Result		As Received Method Detection Limit	Units	Dilution Factor
07869	TO-14A VOA Ext. List Tedlar						
02076	tert-Butyl Alcohol	75-65-0	4.0		0.50	ppb(v)	2.5
07201	Propene	115-07-1	3.0		0.50	ppb(v)	2.5
07202	Dichlorodifluoromethane	75-71-8	0.80	J	0.50	ppb(v)	2.5
07203	Chlorodifluoromethane	75-45-6	N.D.		3.0	ppb(v)	2.5
07204	Freon 114	76-14-2	N.D.		0.50	ppb(v)	2.5
07205	Chloromethane	74-87-3	N.D.		0.50	ppb(v)	2.5
07206	Vinyl Chloride	75-01-4	0.90	J	0.50	ppb(v)	2.5
07207	1,3-Butadiene	106-99-0	N.D.		3.0	ppb(v)	2.5
07208	Bromomethane	74-83-9	N.D.		0.50	ppb(v)	2.5
07209	Chloroethane	75-00-3	1.0	J	0.50	ppb(v)	2.5
07210	Dichlorofluoromethane	75-43-4	N.D.		0.50	ppb(v)	2.5
07212	Trichlorofluoromethane	75-69-4	1.0	J	0.50	ppb(v)	2.5
07213	Pentane	109-66-0	4.0		0.50	ppb(v)	2.5
07214	Acrolein	107-02-8	3.0		1.0	ppb(v)	2.5
07215	1,1-Dichloroethene	75-35-4	5.0		0.50	ppb(v)	2.5
07216	Freon 113	76-13-1	N.D.		1.0	ppb(v)	2.5
07217	Acetone	67-64-1	30.		3.0	ppb(v)	2.5
07218	Methyl Iodide	74-88-4	N.D.		0.50	ppb(v)	2.5
07219	Carbon Disulfide	75-15-0	20.		1.0	ppb(v)	2.5
07220	Acetonitrile	75-05-8	15.		1.0	ppb(v)	2.5
07221	3-Chloropropene	107-05-1	N.D.		1.0	ppb(v)	2.5
07222	Methylene Chloride	75-09-2	6.0		1.0	ppb(v)	2.5
07223	Acrylonitrile	107-13-1	N.D.		1.0	ppb(v)	2.5
07224	trans-1,2-Dichloroethene	156-60-5	3.0		0.50	ppb(v)	2.5
07225	Methyl t-Butyl Ether	1634-04-4	N.D.		0.50	ppb(v)	2.5
07226	Hexane	110-54-3	9.0		0.50	ppb(v)	2.5
07227	1,1-Dichloroethane	75-34-3	50.		0.50	ppb(v)	2.5
07228	Vinyl Acetate	108-05-4	N.D.		0.50	ppb(v)	2.5
07230	cis-1,2-Dichloroethene	156-59-2	63.		0.50	ppb(v)	2.5
07231	2-Butanone	78-93-3	6.0		1.0	ppb(v)	2.5
07232	Ethyl Acetate	141-78-6	N.D.		0.50	ppb(v)	2.5
07233	Methyl Acrylate	96-33-3	N.D.		0.50	ppb(v)	2.5
07234	Chloroform	67-66-3	6.0		0.50	ppb(v)	2.5
07235	1,1,1-Trichloroethane	71-55-6	170.		0.50	ppb(v)	2.5
07236	Carbon Tetrachloride	56-23-5	2.0	J	0.50	ppb(v)	2.5
07237	1,2-Dichloroethane	107-06-2	N.D.		0.50	ppb(v)	2.5
07238	Benzene	71-43-2	0.70	J	0.50	ppb(v)	2.5
07239	Isooctane	540-84-1	N.D.		0.50	ppb(v)	2.5

Lancaster Laboratories

2425 New Holland Pike, PO Box 12425, Lancaster, PA 17605-2425 • 717-656-2300 Fax: 717-656-2681 • www.lancasterlabs.com

Analysis Report

Lancaster Laboratories Sample No. AQ 4572492

North_Bank_3 Tedlar Bag Grab Air Sample
Site Code: SC001 RFA #: GMS05010
Dayton Thermal/Dayton, OH
Collected:07/27/2005 14:05 by GS

Account Number: 10160

Submitted: 07/28/2005 09:05
Reported: 08/01/2005 at 23:37
Discard: 10/01/2005

DaimlerChrysler Corporation
PO Box 537933
Livonia MI 48153-7933

NB3TB SDG#: DCU22-08

CAT No.	Analysis Name	CAS Number	As Received Result		As Received Method Detection Limit	Units	Dilution Factor
07240	Heptane	142-82-5	1.0	J	0.50	ppb(v)	2.5
07241	Trichloroethene	79-01-6	160.		0.50	ppb(v)	2.5
07242	Ethyl Acrylate	140-88-5	N.D.		0.50	ppb(v)	2.5
07243	1,2-Dichloropropane	78-87-5	N.D.		0.50	ppb(v)	2.5
07244	Methyl Methacrylate	80-62-6	N.D.		0.50	ppb(v)	2.5
07245	Dibromomethane	74-95-3	N.D.		0.50	ppb(v)	2.5
07246	1,4-Dioxane	123-91-1	N.D.		0.50	ppb(v)	2.5
07247	Bromodichloromethane	75-27-4	N.D.		0.50	ppb(v)	2.5
07248	cis-1,3-Dichloropropene	10061-01-5	N.D.		0.50	ppb(v)	2.5
07249	4-Methyl-2-Pentanone	108-10-1	N.D.		1.0	ppb(v)	2.5
07250	Toluene	108-88-3	8.0		0.50	ppb(v)	2.5
07251	Octane	111-65-9	3.0		0.50	ppb(v)	2.5
07252	trans-1,3-Dichloropropene	10061-02-6	N.D.		0.50	ppb(v)	2.5
07253	Ethyl Methacrylate	97-63-2	N.D.		0.50	ppb(v)	2.5
07254	1,1,2-Trichloroethane	79-00-5	N.D.		0.50	ppb(v)	2.5
07255	Tetrachloroethene	127-18-4	650.		5.0	ppb(v)	25
07256	2-Hexanone	591-78-6	N.D.		1.0	ppb(v)	2.5
07257	Dibromochloromethane	124-48-1	N.D.		0.50	ppb(v)	2.5
07258	1,2-Dibromoethane	106-93-4	N.D.		0.50	ppb(v)	2.5
07259	Chlorobenzene	108-90-7	N.D.		0.50	ppb(v)	2.5
07260	1,1,1,2-Tetrachloroethane	630-20-6	N.D.		0.50	ppb(v)	2.5
07261	Ethylbenzene	100-41-4	1.0	J	0.50	ppb(v)	2.5
07262	m/p-Xylene	1330-20-7	3.0		0.50	ppb(v)	2.5
07263	o-Xylene	95-47-6	1.0	J	0.50	ppb(v)	2.5
07264	Styrene	100-42-5	1.0	J	0.50	ppb(v)	2.5
07265	Bromoform	75-25-2	N.D.		0.50	ppb(v)	2.5
07266	Cumene	98-82-8	N.D.		0.50	ppb(v)	2.5
07267	1,1,2,2-Tetrachloroethane	79-34-5	N.D.		0.50	ppb(v)	2.5
07268	1,2,3-Trichloropropane	96-18-4	N.D.		0.50	ppb(v)	2.5
07269	Bromobenzene	108-86-1	N.D.		0.50	ppb(v)	2.5
07270	4-Ethyltoluene	622-96-8	0.90	J	0.50	ppb(v)	2.5
07271	1,3,5-Trimethylbenzene	108-67-8	0.50	J	0.50	ppb(v)	2.5
07272	Alpha Methyl Styrene	98-83-9	N.D.		0.50	ppb(v)	2.5
07273	1,2,4-Trimethylbenzene	95-63-6	2.0	J	0.50	ppb(v)	2.5
07274	1,3-Dichlorobenzene	541-73-1	N.D.		1.0	ppb(v)	2.5
07275	1,4-Dichlorobenzene	106-46-7	N.D.		1.0	ppb(v)	2.5
07277	1,2-Dichlorobenzene	95-50-1	N.D.		1.0	ppb(v)	2.5
07278	Hexachloroethane	67-72-1	N.D.		0.50	ppb(v)	2.5
07279	1,2,4-Trichlorobenzene	120-82-1	N.D.		3.0	ppb(v)	2.5
07280	Hexachlorobutadiene	87-68-3	N.D.		1.0	ppb(v)	2.5

The sample was collected in a Tedlar bag which is not the container referenced in the EPA method.

Lancaster Laboratories

2425 New Holland Pike, PO Box 12425, Lancaster, PA 17605-2425 • 717-656-2300 Fax: 717-656-2681 • www.lancasterlabs.com

Analysis Report

Lancaster Laboratories Sample No. AQ 4572492

North_Bank_3 Tedlar Bag Grab Air Sample
Site Code: SC001 RFA #: GMS05010
Dayton Thermal/Dayton, OH
Collected:07/27/2005 14:05 by GS

Account Number: 10160

Submitted: 07/28/2005 09:05
Reported: 08/01/2005 at 23:37
Discard: 10/01/2005

DaimlerChrysler Corporation
PO Box 537933
Livonia MI 48153-7933

NB3TB SDG#: DCU22-08

CAT No.	Analysis Name	CAS Number	As Received Result	As Received Method Detection Limit	Units	Dilution Factor

The reporting limits for the GC/MS volatile compounds were raised because sample dilution was necessary to bring target compounds into the calibration range of the system.

Laboratory Chronicle

CAT No.	Analysis Name	Method	Trial#	Analysis Date and Time	Analyst	Dilution Factor
07869	TO-14A VOA Ext. List Tedlar	EPA Method TO14A	1	07/30/2005 04:03	Douglas Graham	25
07869	TO-14A VOA Ext. List Tedlar	EPA Method TO14A	1	07/30/2005 04:43	Douglas Graham	2.5

Lancaster Laboratories

Analysis Report

2425 New Holland Pike, PO Box 12425, Lancaster, PA 17605-2425 • 717-656-2300 Fax: 717-656-2681 • www.lancasterlabs.com

Lancaster Laboratories Sample No. AQ 4572493

North_Bank_4 Tedlar Bag Grab Air Sample
Site Code: SC001 RFA #: GMS05010
Dayton Thermal/Dayton, OH
Collected:07/27/2005 14:30 by GS

Account Number: 10160

Submitted: 07/28/2005 09:05
Reported: 08/01/2005 at 23:38
Discard: 10/01/2005

DaimlerChrysler Corporation
PO Box 537933
Livonia MI 48153-7933

NB4TB SDG#: DCU22-09*

CAT No.	Analysis Name	CAS Number	As Received Result		As Received Method Detection Limit	Units	Dilution Factor
07869	TO-14A VOA Ext. List Tedlar						
02076	tert-Butyl Alcohol	75-65-0	3.0		0.50	ppb(v)	2.5
07201	Propene	115-07-1	16.		0.50	ppb(v)	2.5
07202	Dichlorodifluoromethane	75-71-8	1.0	J	0.50	ppb(v)	2.5
07203	Chlorodifluoromethane	75-45-6	N.D.		3.0	ppb(v)	2.5
07204	Freon 114	76-14-2	N.D.		0.50	ppb(v)	2.5
07205	Chloromethane	74-87-3	0.80	J	0.50	ppb(v)	2.5
07206	Vinyl Chloride	75-01-4	420.		5.0	ppb(v)	25
07207	1,3-Butadiene	106-99-0	N.D.		3.0	ppb(v)	2.5
07208	Bromomethane	74-83-9	N.D.		0.50	ppb(v)	2.5
07209	Chloroethane	75-00-3	9.0		0.50	ppb(v)	2.5
07210	Dichlorofluoromethane	75-43-4	N.D.		0.50	ppb(v)	2.5
07212	Trichlorofluoromethane	75-69-4	0.80	J	0.50	ppb(v)	2.5
07213	Pentane	109-66-0	4.0		0.50	ppb(v)	2.5
07214	Acrolein	107-02-8	3.0		1.0	ppb(v)	2.5
07215	1,1-Dichloroethene	75-35-4	11.		0.50	ppb(v)	2.5
07216	Freon 113	76-13-1	2.0	J	1.0	ppb(v)	2.5
07217	Acetone	67-64-1	33.		3.0	ppb(v)	2.5
07218	Methyl Iodide	74-88-4	N.D.		0.50	ppb(v)	2.5
07219	Carbon Disulfide	75-15-0	28.		1.0	ppb(v)	2.5
07220	Acetonitrile	75-05-8	12.		1.0	ppb(v)	2.5
07221	3-Chloropropene	107-05-1	N.D.		1.0	ppb(v)	2.5
07222	Methylene Chloride	75-09-2	7.0		1.0	ppb(v)	2.5
07223	Acrylonitrile	107-13-1	N.D.		1.0	ppb(v)	2.5
07224	trans-1,2-Dichloroethene	156-60-5	31.		0.50	ppb(v)	2.5
07225	Methyl t-Butyl Ether	1634-04-4	N.D.		0.50	ppb(v)	2.5
07226	Hexane	110-54-3	3.0		0.50	ppb(v)	2.5
07227	1,1-Dichloroethane	75-34-3	220.		0.50	ppb(v)	2.5
07228	Vinyl Acetate	108-05-4	N.D.		0.50	ppb(v)	2.5
07230	cis-1,2-Dichloroethene	156-59-2	570.		5.0	ppb(v)	25
07231	2-Butanone	78-93-3	15.		1.0	ppb(v)	2.5
07232	Ethyl Acetate	141-78-6	N.D.		0.50	ppb(v)	2.5
07233	Methyl Acrylate	96-33-3	N.D.		0.50	ppb(v)	2.5
07234	Chloroform	67-66-3	3.0		0.50	ppb(v)	2.5
07235	1,1,1-Trichloroethane	71-55-6	230.		0.50	ppb(v)	2.5
07236	Carbon Tetrachloride	56-23-5	N.D.		0.50	ppb(v)	2.5
07237	1,2-Dichloroethane	107-06-2	N.D.		0.50	ppb(v)	2.5
07238	Benzene	71-43-2	6.0		0.50	ppb(v)	2.5
07239	Isooctane	540-84-1	N.D.		0.50	ppb(v)	2.5

Lancaster Laboratories

2425 New Holland Pike, PO Box 12425, Lancaster, PA 17605-2425 • 717-656-2300 Fax: 717-656-2681 • www.lancasterlabs.com

Analysis Report

Lancaster Laboratories Sample No. AQ 4572493

North_Bank_4 Tedlar Bag Grab Air Sample
Site Code: SC001 RFA #: GMS05010
Dayton Thermal/Dayton, OH
Collected:07/27/2005 14:30 by GS

Account Number: 10160

Submitted: 07/28/2005 09:05
Reported: 08/01/2005 at 23:38
Discard: 10/01/2005

DaimlerChrysler Corporation
PO Box 537933
Livonia MI 48153-7933

NB4TB SDG#: DCU22-09*

CAT No.	Analysis Name	CAS Number	As Received Result		As Received Method Detection Limit	Units	Dilution Factor
07240	Heptane	142-82-5	0.60	J	0.50	ppb(v)	2.5
07241	Trichloroethene	79-01-6	57.		0.50	ppb(v)	2.5
07242	Ethyl Acrylate	140-88-5	N.D.		0.50	ppb(v)	2.5
07243	1,2-Dichloropropane	78-87-5	N.D.		0.50	ppb(v)	2.5
07244	Methyl Methacrylate	80-62-6	N.D.		0.50	ppb(v)	2.5
07245	Dibromomethane	74-95-3	N.D.		0.50	ppb(v)	2.5
07246	1,4-Dioxane	123-91-1	N.D.		0.50	ppb(v)	2.5
07247	Bromodichloromethane	75-27-4	N.D.		0.50	ppb(v)	2.5
07248	cis-1,3-Dichloropropene	10061-01-5	N.D.		0.50	ppb(v)	2.5
07249	4-Methyl-2-Pentanone	108-10-1	N.D.		1.0	ppb(v)	2.5
07250	Toluene	108-88-3	9.0		0.50	ppb(v)	2.5
07251	Octane	111-65-9	2.0	J	0.50	ppb(v)	2.5
07252	trans-1,3-Dichloropropene	10061-02-6	N.D.		0.50	ppb(v)	2.5
07253	Ethyl Methacrylate	97-63-2	N.D.		0.50	ppb(v)	2.5
07254	1,1,2-Trichloroethane	79-00-5	N.D.		0.50	ppb(v)	2.5
07255	Tetrachloroethene	127-18-4	600.		5.0	ppb(v)	25
07256	2-Hexanone	591-78-6	N.D.		1.0	ppb(v)	2.5
07257	Dibromochloromethane	124-48-1	N.D.		0.50	ppb(v)	2.5
07258	1,2-Dibromoethane	106-93-4	N.D.		0.50	ppb(v)	2.5
07259	Chlorobenzene	108-90-7	N.D.		0.50	ppb(v)	2.5
07260	1,1,1,2-Tetrachloroethane	630-20-6	N.D.		0.50	ppb(v)	2.5
07261	Ethylbenzene	100-41-4	0.90	J	0.50	ppb(v)	2.5
07262	m/p-Xylene	1330-20-7	3.0		0.50	ppb(v)	2.5
07263	o-Xylene	95-47-6	1.0	J	0.50	ppb(v)	2.5
07264	Styrene	100-42-5	1.0	J	0.50	ppb(v)	2.5
07265	Bromoform	75-25-2	N.D.		0.50	ppb(v)	2.5
07266	Cumene	98-82-8	N.D.		0.50	ppb(v)	2.5
07267	1,1,2,2-Tetrachloroethane	79-34-5	N.D.		0.50	ppb(v)	2.5
07268	1,2,3-Trichloropropane	96-18-4	N.D.		0.50	ppb(v)	2.5
07269	Bromobenzene	108-86-1	N.D.		0.50	ppb(v)	2.5
07270	4-Ethyltoluene	622-96-8	0.90	J	0.50	ppb(v)	2.5
07271	1,3,5-Trimethylbenzene	108-67-8	0.60	J	0.50	ppb(v)	2.5
07272	Alpha Methyl Styrene	98-83-9	N.D.		0.50	ppb(v)	2.5
07273	1,2,4-Trimethylbenzene	95-63-6	2.0	J	0.50	ppb(v)	2.5
07274	1,3-Dichlorobenzene	541-73-1	N.D.		1.0	ppb(v)	2.5
07275	1,4-Dichlorobenzene	106-46-7	N.D.		1.0	ppb(v)	2.5
07277	1,2-Dichlorobenzene	95-50-1	N.D.		1.0	ppb(v)	2.5
07278	Hexachloroethane	67-72-1	N.D.		0.50	ppb(v)	2.5
07279	1,2,4-Trichlorobenzene	120-82-1	N.D.		3.0	ppb(v)	2.5
07280	Hexachlorobutadiene	87-68-3	N.D.		1.0	ppb(v)	2.5

The sample was collected in a Tedlar bag which is not the container referenced in the EPA method.

Lancaster Laboratories

2425 New Holland Pike, PO Box 12425, Lancaster, PA 17605-2425 • 717-656-2300 Fax: 717-656-2681 • www.lancasterlabs.com

Analysis Report

Lancaster Laboratories Sample No. AQ 4572493

North_Bank_4 Tedlar Bag Grab Air Sample
Site Code: SC001 RFA #: GMS05010
Dayton Thermal/Dayton, OH
Collected:07/27/2005 14:30 by GS

Account Number: 10160

Submitted: 07/28/2005 09:05
Reported: 08/01/2005 at 23:38
Discard: 10/01/2005

DaimlerChrysler Corporation
PO Box 537933
Livonia MI 48153-7933

NB4TB SDG#: DCU22-09*

CAT No.	Analysis Name	CAS Number	As Received Result	As Received Method Detection Limit	Units	Dilution Factor

The reporting limits for the GC/MS volatile compounds were raised because sample dilution was necessary to bring target compounds into the calibration range of the system.

Laboratory Chronicle

CAT No.	Analysis Name	Method	Trial#	Analysis Date and Time	Analyst	Dilution Factor
07869	TO-14A VOA Ext. List Tedlar	EPA Method TO14A	1	07/30/2005 05:24	Douglas Graham	25
07869	TO-14A VOA Ext. List Tedlar	EPA Method TO14A	1	07/30/2005 06:05	Douglas Graham	2.5

Lancaster Laboratories

2425 New Holland Pike, PO Box 12425, Lancaster, PA 17605-2425 • 717-656-2300 Fax: 717-656-2681 • www.lancasterlabs.com

Analysis Report

Quality Control Summary

Client Name: DaimlerChrysler Corporation
Reported: 08/01/05 at 11:38 PM

Group Number: 953150

Matrix QC may not be reported if site-specific QC samples were not submitted. In these situations, to demonstrate precision and accuracy at a batch level, a LCS/LCSD was performed, unless otherwise specified in the method.

Laboratory Compliance Quality Control

Analysis Name	Blank Result	Blank MDL	Report Units	LCS %REC	LCSD %REC	LCS/LCSD Limits	RPD	RPD Max
Batch number: A0521030A	Sample number(s): 4572485-4572493							
tert-Butyl Alcohol	N.D.	0.20	ppb(v)					
Propene	N.D.	0.20	ppb(v)					
Dichlorodifluoromethane	N.D.	0.20	ppb(v)					
Chlorodifluoromethane	N.D.	1.0	ppb(v)					
Freon 114	N.D.	0.20	ppb(v)					
Chloromethane	N.D.	0.20	ppb(v)					
Vinyl Chloride	N.D.	0.20	ppb(v)	122		51-149		
1,3-Butadiene	N.D.	1.0	ppb(v)					
Bromomethane	N.D.	0.20	ppb(v)					
Chloroethane	N.D.	0.20	ppb(v)					
Dichlorofluoromethane	N.D.	0.20	ppb(v)					
Trichlorofluoromethane	N.D.	0.20	ppb(v)					
Pentane	N.D.	0.20	ppb(v)					
Acrolein	N.D.	0.50	ppb(v)					
1,1-Dichloroethene	N.D.	0.20	ppb(v)					
Freon 113	N.D.	0.50	ppb(v)					
Acetone	N.D.	1.0	ppb(v)					
Methyl Iodide	N.D.	0.20	ppb(v)					
Carbon Disulfide	N.D.	0.50	ppb(v)					
Acetonitrile	N.D.	0.50	ppb(v)					
3-Chloropropene	N.D.	0.50	ppb(v)					
Methylene Chloride	N.D.	0.50	ppb(v)					
Acrylonitrile	N.D.	0.50	ppb(v)					
trans-1,2-Dichloroethene	N.D.	0.20	ppb(v)					
Methyl t-Butyl Ether	N.D.	0.20	ppb(v)					
Hexane	N.D.	0.20	ppb(v)					
1,1-Dichloroethane	N.D.	0.20	ppb(v)					
Vinyl Acetate	N.D.	0.20	ppb(v)					
cis-1,2-Dichloroethene	N.D.	0.20	ppb(v)					
2-Butanone	N.D.	0.50	ppb(v)					
Ethyl Acetate	N.D.	0.20	ppb(v)					
Methyl Acrylate	N.D.	0.20	ppb(v)					
Chloroform	N.D.	0.20	ppb(v)					
1,1,1-Trichloroethane	N.D.	0.20	ppb(v)	111		73-170		
Carbon Tetrachloride	N.D.	0.20	ppb(v)					
1,2-Dichloroethane	N.D.	0.20	ppb(v)					
Benzene	N.D.	0.20	ppb(v)	111		70-154		
Isooctane	N.D.	0.20	ppb(v)					
Heptane	N.D.	0.20	ppb(v)					
Trichloroethene	N.D.	0.20	ppb(v)	107		62-150		
Ethyl Acrylate	N.D.	0.20	ppb(v)					
1,2-Dichloropropane	N.D.	0.20	ppb(v)					
Methyl Methacrylate	N.D.	0.20	ppb(v)					

*- Outside of specification
(1) The result for one or both determinations was less than five times the LOQ.
(2) The background result was more than four times the spike added.

Lancaster Laboratories

2425 New Holland Pike, PO Box 12425, Lancaster, PA 17605-2425 • 717-656-2300 Fax: 717-656-2681 • www.lancasterlabs.com

Analysis Report

Quality Control Summary

Client Name: DaimlerChrysler Corporation
Reported: 08/01/05 at 11:38 PM

Group Number: 953150

Laboratory Compliance Quality Control

Analysis Name	Blank Result	Blank MDL	Report Units	LCS %REC	LCSD %REC	LCS/LCSD Limits	RPD	RPD Max
Dibromomethane	N.D.	0.20	ppb(v)					
1,4-Dioxane	N.D.	0.20	ppb(v)					
Bromodichloromethane	N.D.	0.20	ppb(v)					
cis-1,3-Dichloropropene	N.D.	0.20	ppb(v)					
4-Methyl-2-Pentanone	N.D.	0.50	ppb(v)					
Toluene	N.D.	0.20	ppb(v)					
Octane	N.D.	0.20	ppb(v)					
trans-1,3-Dichloropropene	N.D.	0.20	ppb(v)					
Ethyl Methacrylate	N.D.	0.20	ppb(v)					
1,1,2-Trichloroethane	N.D.	0.20	ppb(v)					
Tetrachloroethene	N.D.	0.20	ppb(v)					
2-Hexanone	N.D.	0.50	ppb(v)					
Dibromochloromethane	N.D.	0.20	ppb(v)					
1,2-Dibromoethane	N.D.	0.20	ppb(v)					
Chlorobenzene	N.D.	0.20	ppb(v)					
1,1,1,2-Tetrachloroethane	N.D.	0.20	ppb(v)					
Ethylbenzene	N.D.	0.20	ppb(v)	107		63-150		
m/p-Xylene	N.D.	0.20	ppb(v)					
o-Xylene	N.D.	0.20	ppb(v)					
Styrene	N.D.	0.20	ppb(v)					
Bromoform	N.D.	0.20	ppb(v)					
Cumene	N.D.	0.20	ppb(v)					
1,1,2,2-Tetrachloroethane	N.D.	0.20	ppb(v)					
1,2,3-Trichloropropane	N.D.	0.20	ppb(v)					
Bromobenzene	N.D.	0.20	ppb(v)					
4-Ethyltoluene	N.D.	0.20	ppb(v)					
1,3,5-Trimethylbenzene	N.D.	0.20	ppb(v)					
Alpha Methyl Styrene	N.D.	0.20	ppb(v)					
1,2,4-Trimethylbenzene	N.D.	0.20	ppb(v)					
1,3-Dichlorobenzene	N.D.	0.50	ppb(v)					
1,4-Dichlorobenzene	N.D.	0.50	ppb(v)	121		23-150		
1,2-Dichlorobenzene	N.D.	0.50	ppb(v)					
Hexachloroethane	N.D.	0.20	ppb(v)					
1,2,4-Trichlorobenzene	N.D.	1.0	ppb(v)					
Hexachlorobutadiene	N.D.	0.50	ppb(v)					

*- Outside of specification
(1) The result for one or both determinations was less than five times the LOQ.
(2) The background result was more than four times the spike added.

DAIMLERCHRYSLER — Chain-of-Custody

2940 B

Lancaster Laboratories	Project Name: Dayton Thermal - Behr	Consultant: Earth Tech	
2425 New Holland Pike	Site Location: Dayton OHIO	Address: 11135 Technology Pkwy	
Lancaster, PA 17601	Site Code:	Sheboygan, WI 53083	
Phone Number: (717) 656-2300	RFA Number: GMS 05010	Consultant PM Rob Stanson	
Fax Number: (717) 656-2681	DaimlerChrysler PM: Gary Stanczuk	Phone: 920-451-2407 Fax:	

Turn-around Time Request: (circle)
24 calendar hrs.
48 calendar hrs.
7 calendar days
14 calendar days

Data Package Deliverables: (circle)
DaimlerChrysler Level 1
DaimlerChrysler Level 2
CLP

Compound List-Parameter/Method/Bottle Type/Preservative

Matrix Codes
S - Soil
SW - Surface Water
GW - Groundwater
A - Air
Sed. - Sediment
O - Other (specify)

Are aqueous samples field filtered for metals? Yes No

Field Sample Identification	Date Collected	Time Collected	Grab (G) or Composite (C)	Matrix Code	Total # of Containers	Tedlar									Remarks
South Bank H	7/27/05	10:05	G	A	1	✓									
South Bank I	7/27/05	10:30	G	A	1	✓									
South Bank E	7/27/05	10:50	G	A	1	✓									
South Bank F	7/27/05	11:13	G	A	1	✓									
South Bank G	7/27/05	11:35	G	A	1	✓									
~~South Bank~~	~~7/27/05~~		Not			Sampled									
~~South Bank~~	~~7/27/05~~		Not			Sampled									

Sampler(s) Gary Stanczuk

Cooler ID # N/A

Samples Relinquished under Airbill No. 847955573880

Temperature (corrected) N/A

Relinquished by:	Date:	Time:	Received by:	Date:	Time:	Custody Seal Intact?
[signature]	7-27-05	3:00 pm				Yes No
Relinquished by:	Date:	Time:	Received for Laboratory by: Kathy Binkley	7-28-05	0905	Custody Seal Intact? Yes No

Is RFA sampling complete? Yes No

DaimlerChrysler Corporation 800 Chrysler Drive, CIMS 482-00-51, Auburn Hills, Michigan 48326-2757

Distribution: White copy: Data package Yellow: Retained by laboratory Pink: Retained by sampler

Revision No. 3
Created: July 9, 1999

DAIMLERCHRYSLER

Chain-of-Custody

2788 B

Lancaster Laboratories	Project Name: Dayton Thermal - Behr	Consultant: Earth Tech	
2425 New Holland Pike	Site Location: Dayton, OH 10	Address: 11135 Technology Pkwy	
Lancaster, PA 17601	Site Code:	Sheboygan, WI 53083	
Phone Number: (717) 656-2300	RFA Number: GMS 05010	Consultant PM Rob Stanson	
Fax Number: (717) 656-2681	DaimlerChrysler PM: Gary Stanczyk	Phone: 920-451-2407 Fax:	

Turn-around Time Request: (circle)
24 calendar hrs.
48 calendar hrs.
7 calendar days
14 calendar days

Data Package Deliverables: (circle)
DaimlerChrysler Level 1
DaimlerChrysler Level 2
CLP

Compound List-Parameter/Method/Bottle Type/Preservative

Matrix Codes
S - Soil
SW - Surface Water
GW - Groundwater
A - Air
Sed. - Sediment
O - Other (specify)

Are aqueous samples field filtered for metals? Yes No

Field Sample Identification	Date Collected	Time Collected	Grab (G) or Composite (C)	Matrix Code	Total # of Containers	Tedlar								Remarks
North Bank 6	7/27/05	1:20	G	A	1	✓								
North Bank 2	7/27/05	1:41	G	A	1	✓								
North Bank 3	7/27/05	2:05	G	A	1	✓								
North Bank 4	7/27/05	2:30	G	A	1	✓								

Sampler(s): Gary Stanczyk

Cooler ID # N/A

Samples Relinquished under Airbill No. 847955573880

Temperature (corrected) N/A

Relinquished by:	Date:	Time:	Received by:	Date:	Time:	Custody Seal Intact?
[signature]	7-27-05	3:00 pm				Yes No

Is RFA sampling complete? Yes No

Relinquished by:	Date:	Time:	Received for Laboratory by:	Date:	Time:	Custody Seal Intact?
			Kathy Binkley	7-28-05	0905	Yes No

DaimlerChrysler Corporation 800 Chrysler Drive, CIMS 482-00-51, Auburn Hills, Michigan 48326-2757

Distribution: White copy: Data package Yellow: Retained by laboratory Pink: Retained by sampler

Revision No. 3
Created: July 9, 1999

Lancaster Laboratories
2425 New Holland Pike
Lancaster, PA 17601
Phone (717)-656-2300
Fax (717) 656-2681

DAIMLERCHRYSLER CORPORATION BOTTLE REQUEST AND SHIPMENT FORM

0408 B

PARAMETER	NO. OF BOTTLES NEEDED FOR TEST	NO. OF BOTTLES SENT	CHEMICAL PRESERVATIVE	PRESERVATIVE LOT NO.	BOTTLE TYPE	BOTTLE LOT NO.
Volatiles (H2O)	3		HCl		Vials (40 ml)	
Semivolatiles (H2O)	2*		None	N/A	Amber Liter	
PCBs (H2O)	2*		None	N/A	Amber Liter	
Metals (H2O)	1		HNO3		Plastic Liter	
Cyanide (H2O)	1		NaOH/ascorbic acid		Plastic Liter	
TPH- 418.1 (H2O)	2*		HCl		Amber Liter	
TPH-GRO (H2O)	3		HCl		Vials (40 ml)	
TPH-DRO (H2O)	2*		HCl		Amber Liter	
Volatiles (Soil)	1		None	N/A	125ml Glass Jar	
Volatiles (Soil - Low Level)	3		None	N/A	5 g Encore Samplers	
Volatiles (Soil - High Level)	1		None	N/A	5 g Encore Samplers	
TPH-GRO (Soil)	2		None	N/A	5 g Encore Samplers	
Semivolatiles/PCBs/418.1/ DRO/Metals/Moisture (Soil)	1		None	N/A	500ml Glass Jar	
TO-14 Airbag	1	16	None	N/A	Air Bags	024910
DI Water	N/A		N/A	N/A	Amber Liter	
Trip Blank	2		HCl		Vials (40 ml)	
Temperature Blank	N/A	1 per cooler	N/A	N/A	N/A	N/A

Project Name: Dayton Thermal
RFA Number: GM503010
Ship To Address:
FedEx World Service Center
Airport Area
3605 Concorde Rd.
Vandalia, OH 45377

Customer Service Rep: Kathy Klinefelter
Date 7/25/05

pH strips? Yes / No
DaimlerChrysler COCs? Yes / No
Site-specific MS/MSD ? Yes / No
Labels? Yes / No
Custody seals? Yes / No
Cooler No(s): C10684
Packed by: [illegible] Date 7/25/05
Shipped by: [illegible] Date 7/25/05

[illegible]

Sampling Notes:

* - Two one-liter bottles are recommended for collection of semivolatiles, PCBs and TPH-DRO to allow for sample reextraction. However, if well volumes do not permit collection of this volume for each parameter, a minimum of 1 liter is required for each parameter.

IF SITE-SPECIFIC MS/MSD REQUESTED IN RFA: Additional bottles have been provided to permit collection of adequate volumes for SITE-SPECIFIC MS/MSD analyses for each analytical parameter. MS/MSD samples should be collected for each parameter and matrix at a rate of 1 in 20 samples or per sampling event if less than 20 samples are collected.

Additional Comments:

Please return all unused glassware and coolers when sampling is complete. Please return this form with final sample shipment.

White copy - original - return to lab
Revision 1 / July 9, 1999

Yellow copy - retained by field

Pink copy - retained by shipper

Lancaster Laboratories
2425 New Holland Pike • Lancaster, PA 17601

Environmental Sample Administration
Receipt Documentation Log

Client/Project: DaimlerChrysler (MI)

Date of Receipt: 7-28-05

Time of Receipt: 0905

Source Code: 50-1

Shipping Container Sealed: Y / N

Custody Seal Present: Y / N

Custody Seal Intact: Y / N / NA

Package: Chilled / Not Chilled

Unpacker Emp. No.: 1255

Temperature of Shipping Containers	
#1	#2
Thermometer ID:	Thermometer ID:
Temp.:	Temp.:
Temp. Bottle / Surface Temp.	Temp. Bottle / Surface Temp.
Wet Ice / Dry Ice / Ice Packs	Wet Ice / Dry Ice / Ice Packs
Ice Present? Y / N Loose / Bagged	Ice Present? Y / N Loose / Bagged
#3	#4
Thermometer ID:	Thermometer ID:
Temp.:	Temp.:
Temp. Bottle / Surface Temp.	Temp. Bottle / Surface Temp.
Wet Ice / Dry Ice / Ice Packs	Wet Ice / Dry Ice / Ice Packs
Ice Present? Y / N Loose / Bagged	Ice Present? Y / N Loose / Bagged

~~Paperwork Discrepancy/Unpacking Problems:~~

Rec'd Tedlar Bags.

Sample Administration Internal Chain of Custody			
Name	Date	Time	Reason for Transfer
Kathy Binkley	7-28-05	1500	Unpacking to Storage
[illegible]	7-28-05	1626	Place in Storage or Entry
			Remove from Storage
			Place in Storage or Entry
			Entry

Lancaster Laboratories
2425 New Holland Pike • Lancaster, PA 17601

Explanation of Symbols and Abbreviations

The following defines common symbols and abbreviations used in reporting technical data:

N.D.	none detected	**BMQL**	Below Minimum Quantitation Level
TNTC	Too Numerous To Count	**MPN**	Most Probable Number
IU	International Units	**CP Units**	cobalt-chloroplatinate units
umhos/cm	micromhos/cm	**NTU**	nephelometric turbidity units
C	degrees Celsius	**F**	degrees Fahrenheit
meq	milliequivalents	**lb.**	pound(s)
g	gram(s)	**kg**	kilogram(s)
ug	microgram(s)	**mg**	milligram(s)
ml	milliliter(s)	**l**	liter(s)
m3	cubic meter(s)	**ul**	microliter(s)

< less than - The number following the sign is the limit of quantitation, the smallest amount of analyte which can be reliably determined using this specific test.

> greater than

J estimated value – The result is ≥ the Method Detection Limit (MDL) and < the Limit of Quantitation (LOQ).

ppm parts per million - One ppm is equivalent to one milligram per kilogram (mg/kg), or one gram per million grams. For aqueous liquids, ppm is usually taken to be equivalent to milligrams per liter (mg/l), because one liter of water has a weight very close to a kilogram. For gases or vapors, one ppm is equivalent to one microliter of gas per liter of gas.

ppb parts per billion

Dry weight basis Results printed under this heading have been adjusted for moisture content. This increases the analyte weight concentration to approximate the value present in a similar sample without moisture. All other results are reported on an as-received basis.

U.S. EPA CLP Data Qualifiers:

Organic Qualifiers

A	TIC is a possible aldol-condensation product
B	Analyte was also detected in the blank
C	Pesticide result confirmed by GC/MS
D	Compound quantitated on a diluted sample
E	Concentration exceeds the calibration range of the instrument
N	Presumptive evidence of a compound (TICs only)
P	Concentration difference between primary and confirmation columns >25%
U	Compound was not detected
X,Y,Z	Defined in case narrative

Inorganic Qualifiers

B	Value is <CRDL, but ≥IDL
E	Estimated due to interference
M	Duplicate injection precision not met
N	Spike sample not within control limits
S	Method of standard additions (MSA) used for calculation
U	Compound was not detected
W	Post digestion spike out of control limits
*****	Duplicate analysis not within control limits
+	Correlation coefficient for MSA <0.995

Analytical test results for methods listed on the laboratories' accreditation scope meet all requirements of NELAC unless otherwise noted under the individual analysis.

Measurement uncertainty values, as applicable, are available upon request.

Tests results relate only to the sample tested. Clients should be aware that a critical step in a chemical or microbiological analysis is the collection of the sample. Unless the sample analyzed is truly representative of the bulk of material involved, the test results will be meaningless. If you have questions regarding the proper techniques of collecting samples, please contact us. We cannot be held responsible for sample integrity, however, unless sampling has been performed by a member of our staff. This report shall not be reproduced except in full, without the written approval of the laboratory.

WARRANTY AND LIMITS OF LIABILITY - In accepting analytical work, we warrant the accuracy of test results for the sample as submitted. THE FOREGOING EXPRESS WARRANTY IS EXCLUSIVE AND IS GIVEN IN LIEU OF ALL OTHER WARRANTIES, EXPRESSED OR IMPLIED. WE DISCLAIM ANY OTHER WARRANTIES, EXPRESSED OR IMPLIED, INCLUDING A WARRANTY OF FITNESS FOR PARTICULAR PURPOSE AND WARRANTY OF MERCHANTABILITY. IN NO EVENT SHALL LANCASTER LABORATORIES BE LIABLE FOR INDIRECT, SPECIAL, CONSEQUENTIAL, OR INCIDENTAL DAMAGES INCLUDING, BUT NOT LIMITED TO, DAMAGES FOR LOSS OF PROFIT OR GOODWILL REGARDLESS OF (A) THE NEGLIGENCE (EITHER SOLE OR CONCURRENT) OF LANCASTER LABORATORIES AND (B) WHETHER LANCASTER LABORATORIES HAS BEEN INFORMED OF THE POSSIBILITY OF SUCH DAMAGES. We accept no legal responsibility for the purposes for which the client uses the test results. No purchase order or other order for work shall be accepted by Lancaster Laboratories which includes any conditions that vary from the Standard Terms and Conditions of Lancaster Laboratories and we hereby object to any conflicting terms contained in any acceptance or order submitted by client.

Lancaster Laboratories

2425 New Holland Pike, PO Box 12425, Lancaster, PA 17605-2425 • 717-656-2300 Fax. 717-656-2681 • www.lancasterlabs.com

Analysis Report

ANALYTICAL RESULTS

Prepared for:

DaimlerChrysler Corporation
PO Box 537933
Livonia MI 48153-7933

248-576-5741

Prepared by:

Lancaster Laboratories
2425 New Holland Pike
Lancaster, PA 17605-2425

SAMPLE GROUP

The sample group for this submittal is 949502. Samples arrived at the laboratory on Thursday, June 30, 2005. The PO# for this group is N99C403749-B.

Client Description	Lancaster Labs Number
North_Bank_2 Tedlar Bag Grab Air Sample	4554256
North_Bank_3 Tedlar Bag Grab Air Sample	4554257
North_Bank_4 Tedlar Bag Grab Air Sample	4554258
North_Bank_6 Tedlar Bag Grab Air Sample	4554259
South_Bank_C Tedlar Bag Grab Air Sample	4554260
South_Bank_E Tedlar Bag Grab Air Sample	4554261
South_Bank_F Tedlar Bag Grab Air Sample	4554262
South_Bank_G Tedlar Bag Grab Air Sample	4554263
South_Bank_H Tedlar Bag Grab Air Sample	4554264
South_Bank_I Tedlar Bag Grab Air Sample	4554265

ELECTRONIC COPY TO	Earth Tech	Attn: Lisa Smith
ELECTRONIC COPY TO	Earth Tech	Attn: Rob Stenson
1 COPY TO	LLI	Attn: Kathy Klinefelter
ELECTRONIC COPY TO	Earth Tech	Attn: Jamie Dickson

Lancaster Laboratories

Analysis Report

2425 New Holland Pike, PO Box 12425, Lancaster, PA 17605-2425 • 717-656-2300 Fax: 717-656-2681 • www.lancasterlabs.com

Questions? Contact your Client Services Representative
Katherine A Klinefelter at (717) 656-2300

Respectfully Submitted,

Michele J. Smith

Michele J. Smith
Group Leader

Lancaster Laboratories

2425 New Holland Pike, PO Box 12425, Lancaster, PA 17605-2425 • 717-656-2300 Fax: 717-656-2681 • www.lancasterlabs.com

Analysis Report

Lancaster Laboratories Sample No. AQ 4554256

North_Bank_2 Tedlar Bag Grab Air Sample
Site Code: SC001 RFA #: ET05034
Dayton Thermal/Dayton, OH
Collected:06/29/2005 13:04 by BC

Account Number: 10160

Submitted: 06/30/2005 09:10
Reported: 07/12/2005 at 22:31
Discard: 09/11/2005

DaimlerChrysler Corporation
PO Box 537933
Livonia MI 48153-7933

NRTH2 SDG#: DCU07-01

CAT No.	Analysis Name	CAS Number	As Received Result		As Received Method Detection Limit	Units	Dilution Factor
07869	TO-14A VOA Ext. List Tedlar						
02076	tert-Butyl Alcohol	75-65-0	N.D.		0.20	ppb(v)	1
07201	Propene	115-07-1	N.D.		0.20	ppb(v)	1
07202	Dichlorodifluoromethane	75-71-8	0.80	J	0.20	ppb(v)	1
07203	Chlorodifluoromethane	75-45-6	N.D.		1.0	ppb(v)	1
07204	Freon 114	76-14-2	N.D.		0.20	ppb(v)	1
07205	Chloromethane	74-87-3	N.D.		0.20	ppb(v)	1
07206	Vinyl Chloride	75-01-4	3.0		0.20	ppb(v)	1
07207	1,3-Butadiene	106-99-0	N.D.		1.0	ppb(v)	1
07208	Bromomethane	74-83-9	N.D.		0.20	ppb(v)	1
07209	Chloroethane	75-00-3	2.0		0.20	ppb(v)	1
07210	Dichlorofluoromethane	75-43-4	N.D.		0.20	ppb(v)	1
07212	Trichlorofluoromethane	75-69-4	1.0		0.20	ppb(v)	1
07213	Pentane	109-66-0	1.0		0.20	ppb(v)	1
07214	Acrolein	107-02-8	N.D.		0.50	ppb(v)	1
07215	1,1-Dichloroethene	75-35-4	12.		0.20	ppb(v)	1
07216	Freon 113	76-13-1	0.90	J	0.50	ppb(v)	1
07217	Acetone	67-64-1	45.		1.0	ppb(v)	1
07218	Methyl Iodide	74-88-4	N.D.		0.20	ppb(v)	1
07219	Carbon Disulfide	75-15-0	5.0		0.50	ppb(v)	1
07220	Acetonitrile	75-05-8	N.D.		0.50	ppb(v)	1
07221	3-Chloropropene	107-05-1	N.D.		0.50	ppb(v)	1
07222	Methylene Chloride	75-09-2	3.0		0.50	ppb(v)	1
07223	Acrylonitrile	107-13-1	N.D.		0.50	ppb(v)	1
07224	trans-1,2-Dichloroethene	156-60-5	3.0		0.20	ppb(v)	1
07225	Methyl t-Butyl Ether	1634-04-4	N.D.		0.20	ppb(v)	1
07226	Hexane	110-54-3	6.0		0.20	ppb(v)	1
07227	1,1-Dichloroethane	75-34-3	25.		0.20	ppb(v)	1
07228	Vinyl Acetate	108-05-4	N.D.		0.20	ppb(v)	1
07230	cis-1,2-Dichloroethene	156-59-2	120.		1.0	ppb(v)	5
07231	2-Butanone	78-93-3	5.0		0.50	ppb(v)	1
07232	Ethyl Acetate	141-78-6	N.D.		0.20	ppb(v)	1
07233	Methyl Acrylate	96-33-3	N.D.		0.20	ppb(v)	1
07234	Chloroform	67-66-3	3.0		0.20	ppb(v)	1
07235	1,1,1-Trichloroethane	71-55-6	210.		1.0	ppb(v)	5
07236	Carbon Tetrachloride	56-23-5	0.90	J	0.20	ppb(v)	1
07237	1,2-Dichloroethane	107-06-2	N.D.		0.20	ppb(v)	1
07238	Benzene	71-43-2	4.0		0.20	ppb(v)	1
07239	Isooctane	540-84-1	1.0		0.20	ppb(v)	1

Lancaster Laboratories

Analysis Report

2425 New Holland Pike, PO Box 12425, Lancaster, PA 17605-2425 • 717-656-2300 Fax: 717-656-2681 • www.lancasterlabs.com

Lancaster Laboratories Sample No. AQ 4554256

North_Bank_2 Tedlar Bag Grab Air Sample
Site Code: SC001 RFA #: ET05034
Dayton Thermal/Dayton, OH
Collected:06/29/2005 13:04 by BC

Account Number: 10160

Submitted: 06/30/2005 09:10
Reported: 07/12/2005 at 22:31
Discard: 09/11/2005

DaimlerChrysler Corporation
PO Box 537933
Livonia MI 48153-7933

NRTH2 SDG#: DCU07-01

CAT No.	Analysis Name	CAS Number	As Received Result	As Received Method Detection Limit	Units	Dilution Factor
07240	Heptane	142-82-5	4.0	0.20	ppb(v)	1
07241	Trichloroethene	79-01-6	130.	1.0	ppb(v)	5
07242	Ethyl Acrylate	140-88-5	N.D.	0.20	ppb(v)	1
07243	1,2-Dichloropropane	78-87-5	N.D.	0.20	ppb(v)	1
07244	Methyl Methacrylate	80-62-6	N.D.	0.20	ppb(v)	1
07245	Dibromomethane	74-95-3	N.D.	0.20	ppb(v)	1
07246	1,4-Dioxane	123-91-1	N.D.	0.20	ppb(v)	1
07247	Bromodichloromethane	75-27-4	N.D.	0.20	ppb(v)	1
07248	cis-1,3-Dichloropropene	10061-01-5	N.D.	0.20	ppb(v)	1
07249	4-Methyl-2-Pentanone	108-10-1	N.D.	0.50	ppb(v)	1
07250	Toluene	108-88-3	28.	0.20	ppb(v)	1
07251	Octane	111-65-9	4.0	0.20	ppb(v)	1
07252	trans-1,3-Dichloropropene	10061-02-6	N.D.	0.20	ppb(v)	1
07253	Ethyl Methacrylate	97-63-2	N.D.	0.20	ppb(v)	1
07254	1,1,2-Trichloroethane	79-00-5	N.D.	0.20	ppb(v)	1
07255	Tetrachloroethene	127-18-4	240.	2.0	ppb(v)	12
07256	2-Hexanone	591-78-6	N.D.	0.50	ppb(v)	1
07257	Dibromochloromethane	124-48-1	N.D.	0.20	ppb(v)	1
07258	1,2-Dibromoethane	106-93-4	N.D.	0.20	ppb(v)	1
07259	Chlorobenzene	108-90-7	N.D.	0.20	ppb(v)	1
07260	1,1,1,2-Tetrachloroethane	630-20-6	N.D.	0.20	ppb(v)	1
07261	Ethylbenzene	100-41-4	11.	0.20	ppb(v)	1
07262	m/p-Xylene	1330-20-7	47.	0.20	ppb(v)	1
07263	o-Xylene	95-47-6	19.	0.20	ppb(v)	1
07264	Styrene	100-42-5	8.0	0.20	ppb(v)	1
07265	Bromoform	75-25-2	N.D.	0.20	ppb(v)	1
07266	Cumene	98-82-8	2.0	0.20	ppb(v)	1
07267	1,1,2,2-Tetrachloroethane	79-34-5	N.D.	0.20	ppb(v)	1
07268	1,2,3-Trichloropropane	96-18-4	N.D.	0.20	ppb(v)	1
07269	Bromobenzene	108-86-1	N.D.	0.20	ppb(v)	1
07270	4-Ethyltoluene	622-96-8	19.	0.20	ppb(v)	1
07271	1,3,5-Trimethylbenzene	108-67-8	19.	0.20	ppb(v)	1
07272	Alpha Methyl Styrene	98-83-9	N.D.	0.20	ppb(v)	1
07273	1,2,4-Trimethylbenzene	95-63-6	31.	0.20	ppb(v)	1
07274	1,3-Dichlorobenzene	541-73-1	N.D.	0.50	ppb(v)	1
07275	1,4-Dichlorobenzene	106-46-7	N.D.	0.50	ppb(v)	1
07277	1,2-Dichlorobenzene	95-50-1	N.D.	0.50	ppb(v)	1
07278	Hexachloroethane	67-72-1	N.D.	0.20	ppb(v)	1
07279	1,2,4-Trichlorobenzene	120-82-1	N.D.	1.0	ppb(v)	1
07280	Hexachlorobutadiene	87-68-3	N.D.	0.50	ppb(v)	1

The sample was collected in a Tedlar bag which is not the container referenced in the EPA method.

Lancaster Laboratories

Analysis Report

2425 New Holland Pike, PO Box 12425, Lancaster, PA 17605-2425 • 717-656-2300 Fax: 717-656-2681 • www.lancasterlabs.com

Lancaster Laboratories Sample No. AQ 4554256

North_Bank_2 Tedlar Bag Grab Air Sample
Site Code: SC001 RFA #: ET05034
Dayton Thermal/Dayton, OH
Collected:06/29/2005 13:04 by BC

Account Number: 10160

Submitted: 06/30/2005 09:10
Reported: 07/12/2005 at 22:31
Discard: 09/11/2005

DaimlerChrysler Corporation
PO Box 537933
Livonia MI 48153-7933

NRTH2 SDG#: DCU07-01

CAT No.	Analysis Name	CAS Number	As Received Result	As Received Method Detection Limit	Units	Dilution Factor

Laboratory Chronicle

CAT No.	Analysis Name	Method	Trial#	Analysis Date and Time	Analyst	Dilution Factor
07869	TO-14A VOA Ext. List Tedlar	EPA Method TO14A	1	07/01/2005 19:23	Jeffrey B Smith	5
07869	TO-14A VOA Ext. List Tedlar	EPA Method TO14A	1	07/01/2005 20:01	Jeffrey B Smith	1
07869	TO-14A VOA Ext. List Tedlar	EPA Method TO14A	1	07/11/2005 02:25	Jeffrey B Smith	12

Lancaster Laboratories

2425 New Holland Pike, PO Box 12425, Lancaster, PA 17605-2425 • 717-656-2300 Fax: 717-656-2681 • www.lancasterlabs.com

Analysis Report

Lancaster Laboratories Sample No. AQ 4554257

North_Bank_3 Tedlar Bag Grab Air Sample
Site Code: SC001 RFA #: ET05034
Dayton Thermal/Dayton, OH
Collected:06/29/2005 12:19 by BC

Account Number: 10160

Submitted: 06/30/2005 09:10
Reported: 07/12/2005 at 22:31
Discard: 09/11/2005

DaimlerChrysler Corporation
PO Box 537933
Livonia MI 48153-7933

NRTH3 SDG#: DCU07-02

CAT No.	Analysis Name	CAS Number	As Received Result		As Received Method Detection Limit	Units	Dilution Factor
07869	TO-14A VOA Ext. List Tedlar						
02076	tert-Butyl Alcohol	75-65-0	N.D.		0.20	ppb(v)	1
07201	Propene	115-07-1	N.D.		0.20	ppb(v)	1
07202	Dichlorodifluoromethane	75-71-8	0.90	J	0.20	ppb(v)	1
07203	Chlorodifluoromethane	75-45-6	N.D.		1.0	ppb(v)	1
07204	Freon 114	76-14-2	N.D.		0.20	ppb(v)	1
07205	Chloromethane	74-87-3	N.D.		0.20	ppb(v)	1
07206	Vinyl Chloride	75-01-4	0.70	J	0.20	ppb(v)	1
07207	1,3-Butadiene	106-99-0	N.D.		1.0	ppb(v)	1
07208	Bromomethane	74-83-9	N.D.		0.20	ppb(v)	1
07209	Chloroethane	75-00-3	1.0		0.20	ppb(v)	1
07210	Dichlorofluoromethane	75-43-4	N.D.		0.20	ppb(v)	1
07212	Trichlorofluoromethane	75-69-4	N.D.		0.20	ppb(v)	1
07213	Pentane	109-66-0	25.		0.20	ppb(v)	1
07214	Acrolein	107-02-8	N.D.		0.50	ppb(v)	1
07215	1,1-Dichloroethene	75-35-4	6.0		0.20	ppb(v)	1
07216	Freon 113	76-13-1	0.70	J	0.50	ppb(v)	1
07217	Acetone	67-64-1	75.		1.0	ppb(v)	1
07218	Methyl Iodide	74-88-4	N.D.		0.20	ppb(v)	1
07219	Carbon Disulfide	75-15-0	8.0		0.50	ppb(v)	1
07220	Acetonitrile	75-05-8	N.D.		0.50	ppb(v)	1
07221	3-Chloropropene	107-05-1	N.D.		0.50	ppb(v)	1
07222	Methylene Chloride	75-09-2	5.0		0.50	ppb(v)	1
07223	Acrylonitrile	107-13-1	6.0		0.50	ppb(v)	1
07224	trans-1,2-Dichloroethene	156-60-5	4.0		0.20	ppb(v)	1
07225	Methyl t-Butyl Ether	1634-04-4	N.D.		0.20	ppb(v)	1
07226	Hexane	110-54-3	16.		0.20	ppb(v)	1
07227	1,1-Dichloroethane	75-34-3	52.		0.20	ppb(v)	1
07228	Vinyl Acetate	108-05-4	N.D.		0.20	ppb(v)	1
07230	cis-1,2-Dichloroethene	156-59-2	61.		0.20	ppb(v)	1
07231	2-Butanone	78-93-3	61.		0.50	ppb(v)	1
07232	Ethyl Acetate	141-78-6	N.D.		0.20	ppb(v)	1
07233	Methyl Acrylate	96-33-3	N.D.		0.20	ppb(v)	1
07234	Chloroform	67-66-3	N.D.		0.20	ppb(v)	1
07235	1,1,1-Trichloroethane	71-55-6	170.		1.0	ppb(v)	5
07236	Carbon Tetrachloride	56-23-5	3.0		0.20	ppb(v)	1
07237	1,2-Dichloroethane	107-06-2	N.D.		0.20	ppb(v)	1
07238	Benzene	71-43-2	N.D.		0.20	ppb(v)	1
07239	Isooctane	540-84-1	3.0		0.20	ppb(v)	1

Lancaster Laboratories

2425 New Holland Pike, PO Box 12425. Lancaster, PA 17605-2425 • 717-656-2300 Fax: 717-656-2681 • www.lancasterlabs.com

Analysis Report

Lancaster Laboratories Sample No. AQ 4554257

North_Bank_3 Tedlar Bag Grab Air Sample
Site Code: SC001 RFA #: ET05034
Dayton Thermal/Dayton, OH
Collected:06/29/2005 12:19 by BC

Account Number: 10160

Submitted: 06/30/2005 09:10
Reported: 07/12/2005 at 22:31
Discard: 09/11/2005

DaimlerChrysler Corporation
PO Box 537933
Livonia MI 48153-7933

NRTH3 SDG#: DCU07-02

CAT No.	Analysis Name	CAS Number	As Received Result	As Received Method Detection Limit	Units	Dilution Factor
07240	Heptane	142-82-5	11.	0.20	ppb(v)	1
07241	Trichloroethene	79-01-6	150.	1.0	ppb(v)	5
07242	Ethyl Acrylate	140-88-5	N.D.	0.20	ppb(v)	1
07243	1,2-Dichloropropane	78-87-5	N.D.	0.20	ppb(v)	1
07244	Methyl Methacrylate	80-62-6	N.D.	0.20	ppb(v)	1
07245	Dibromomethane	74-95-3	N.D.	0.20	ppb(v)	1
07246	1,4-Dioxane	123-91-1	N.D.	0.20	ppb(v)	1
07247	Bromodichloromethane	75-27-4	N.D.	0.20	ppb(v)	1
07248	cis-1,3-Dichloropropene	10061-01-5	N.D.	0.20	ppb(v)	1
07249	4-Methyl-2-Pentanone	108-10-1	4.0	0.50	ppb(v)	1
07250	Toluene	108-88-3	71.	0.20	ppb(v)	1
07251	Octane	111-65-9	9.0	0.20	ppb(v)	1
07252	trans-1,3-Dichloropropene	10061-02-6	N.D.	0.20	ppb(v)	1
07253	Ethyl Methacrylate	97-63-2	N.D.	0.20	ppb(v)	1
07254	1,1,2-Trichloroethane	79-00-5	N.D.	0.20	ppb(v)	1
07255	Tetrachloroethene	127-18-4	380.	1.0	ppb(v)	5
07256	2-Hexanone	591-78-6	N.D.	0.50	ppb(v)	1
07257	Dibromochloromethane	124-48-1	N.D.	0.20	ppb(v)	1
07258	1,2-Dibromoethane	106-93-4	N.D.	0.20	ppb(v)	1
07259	Chlorobenzene	108-90-7	N.D.	0.20	ppb(v)	1
07260	1,1,1,2-Tetrachloroethane	630-20-6	N.D.	0.20	ppb(v)	1
07261	Ethylbenzene	100-41-4	21.	0.20	ppb(v)	1
07262	m/p-Xylene	1330-20-7	81.	0.20	ppb(v)	1
07263	o-Xylene	95-47-6	31.	0.20	ppb(v)	1
07264	Styrene	100-42-5	18.	0.20	ppb(v)	1
07265	Bromoform	75-25-2	N.D.	0.20	ppb(v)	1
07266	Cumene	98-82-8	3.0	0.20	ppb(v)	1
07267	1,1,2,2-Tetrachloroethane	79-34-5	N.D.	0.20	ppb(v)	1
07268	1,2,3-Trichloropropane	96-18-4	N.D.	0.20	ppb(v)	1
07269	Bromobenzene	108-86-1	N.D.	0.20	ppb(v)	1
07270	4-Ethyltoluene	622-96-8	21.	0.20	ppb(v)	1
07271	1,3,5-Trimethylbenzene	108-67-8	21.	0.20	ppb(v)	1
07272	Alpha Methyl Styrene	98-83-9	N.D.	0.20	ppb(v)	1
07273	1,2,4-Trimethylbenzene	95-63-6	28.	0.20	ppb(v)	1
07274	1,3-Dichlorobenzene	541-73-1	N.D.	0.50	ppb(v)	1
07275	1,4-Dichlorobenzene	106-46-7	N.D.	0.50	ppb(v)	1
07277	1,2-Dichlorobenzene	95-50-1	N.D.	0.50	ppb(v)	1
07278	Hexachloroethane	67-72-1	N.D.	0.20	ppb(v)	1
07279	1,2,4-Trichlorobenzene	120-82-1	N.D.	1.0	ppb(v)	1
07280	Hexachlorobutadiene	87-68-3	N.D.	0.50	ppb(v)	1

The sample was collected in a Tedlar bag which is not the container referenced in the EPA method.

Lancaster Laboratories

Analysis Report

2425 New Holland Pike, PO Box 12425, Lancaster, PA 17605-2425 • 717-656-2300 Fax: 717-656-2681 • www.lancasterlabs.com

Lancaster Laboratories Sample No. AQ 4554257

North_Bank_3 Tedlar Bag Grab Air Sample
Site Code: SC001 RFA #: ET05034
Dayton Thermal/Dayton, OH
Collected:06/29/2005 12:19 by BC

Account Number: 10160

Submitted: 06/30/2005 09:10
Reported: 07/12/2005 at 22:31
Discard: 09/11/2005

DaimlerChrysler Corporation
PO Box 537933
Livonia MI 48153-7933

NRTH3 SDG#: DCU07-02

CAT No.	Analysis Name	CAS Number	As Received Result	As Received Method Detection Limit	Units	Dilution Factor

Laboratory Chronicle

CAT No.	Analysis Name	Method	Trial#	Analysis Date and Time	Analyst	Dilution Factor
07869	TO-14A VOA Ext. List Tedlar	EPA Method TO14A	1	07/01/2005 20:39	Jeffrey B Smith	5
07869	TO-14A VOA Ext. List Tedlar	EPA Method TO14A	1	07/01/2005 21:17	Jeffrey B Smith	1

Lancaster Laboratories

Analysis Report

2425 New Holland Pike, PO Box 12425, Lancaster, PA 17605-2425 • 717-656-2300 Fax: 717-656-2681 • www.lancasterlabs.com

Lancaster Laboratories Sample No. AQ 4554258

North_Bank_4 Tedlar Bag Grab Air Sample
Site Code: SC001 RFA #: ET05034
Dayton Thermal/Dayton, OH
Collected:06/29/2005 12:34 by BC

Account Number: 10160

Submitted: 06/30/2005 09:10
Reported: 07/12/2005 at 22:31
Discard: 09/11/2005

DaimlerChrysler Corporation
PO Box 537933
Livonia MI 48153-7933

NRTH4 SDG#: DCU07-03

CAT No.	Analysis Name	CAS Number	As Received Result		As Received Method Detection Limit	Units	Dilution Factor
07869	TO-14A VOA Ext. List Tedlar						
02076	tert-Butyl Alcohol	75-65-0	N.D.		0.20	ppb(v)	1
07201	Propene	115-07-1	9.0		0.20	ppb(v)	1
07202	Dichlorodifluoromethane	75-71-8	1.0		0.20	ppb(v)	1
07203	Chlorodifluoromethane	75-45-6	7.0		1.0	ppb(v)	1
07204	Freon 114	76-14-2	N.D.		0.20	ppb(v)	1
07205	Chloromethane	74-87-3	N.D.		0.20	ppb(v)	1
07206	Vinyl Chloride	75-01-4	300.		1.0	ppb(v)	5
07207	1,3-Butadiene	106-99-0	N.D.		1.0	ppb(v)	1
07208	Bromomethane	74-83-9	N.D.		0.20	ppb(v)	1
07209	Chloroethane	75-00-3	9.0		0.20	ppb(v)	1
07210	Dichlorofluoromethane	75-43-4	N.D.		0.20	ppb(v)	1
07212	Trichlorofluoromethane	75-69-4	0.50	J	0.20	ppb(v)	1
07213	Pentane	109-66-0	16.		0.20	ppb(v)	1
07214	Acrolein	107-02-8	N.D.		0.50	ppb(v)	1
07215	1,1-Dichloroethene	75-35-4	5.0		0.20	ppb(v)	1
07216	Freon 113	76-13-1	0.70	J	0.50	ppb(v)	1
07217	Acetone	67-64-1	62.		1.0	ppb(v)	1
07218	Methyl Iodide	74-88-4	N.D.		0.20	ppb(v)	1
07219	Carbon Disulfide	75-15-0	3.0		0.50	ppb(v)	1
07220	Acetonitrile	75-05-8	N.D.		0.50	ppb(v)	1
07221	3-Chloropropene	107-05-1	N.D.		0.50	ppb(v)	1
07222	Methylene Chloride	75-09-2	4.0		0.50	ppb(v)	1
07223	Acrylonitrile	107-13-1	N.D.		0.50	ppb(v)	1
07224	trans-1,2-Dichloroethene	156-60-5	23.		0.20	ppb(v)	1
07225	Methyl t-Butyl Ether	1634-04-4	N.D.		0.20	ppb(v)	1
07226	Hexane	110-54-3	12.		0.20	ppb(v)	1
07227	1,1-Dichloroethane	75-34-3	240.		1.0	ppb(v)	5
07228	Vinyl Acetate	108-05-4	N.D.		0.20	ppb(v)	1
07230	cis-1,2-Dichloroethene	156-59-2	220.		2.0	ppb(v)	12
07231	2-Butanone	78-93-3	8.0		0.50	ppb(v)	1
07232	Ethyl Acetate	141-78-6	N.D.		0.20	ppb(v)	1
07233	Methyl Acrylate	96-33-3	N.D.		0.20	ppb(v)	1
07234	Chloroform	67-66-3	3.0		0.20	ppb(v)	1
07235	1,1,1-Trichloroethane	71-55-6	170.		1.0	ppb(v)	5
07236	Carbon Tetrachloride	56-23-5	N.D.		0.20	ppb(v)	1
07237	1,2-Dichloroethane	107-06-2	N.D.		0.20	ppb(v)	1
07238	Benzene	71-43-2	9.0		0.20	ppb(v)	1
07239	Isooctane	540-84-1	2.0		0.20	ppb(v)	1

Lancaster Laboratories

2425 New Holland Pike, PO Box 12425, Lancaster, PA 17605-2425 • 717-656-2300 Fax: 717-656-2681 • www.lancasterlabs.com

Analysis Report

Lancaster Laboratories Sample No. AQ 4554258

North_Bank_4 Tedlar Bag Grab Air Sample
Site Code: SC001 RFA #: ET05034
Dayton Thermal/Dayton, OH
Collected:06/29/2005 12:34 by BC

Account Number: 10160

Submitted: 06/30/2005 09:10
Reported: 07/12/2005 at 22:31
Discard: 09/11/2005

DaimlerChrysler Corporation
PO Box 537933
Livonia MI 48153-7933

NRTH4 SDG#: DCU07-03

CAT No.	Analysis Name	CAS Number	As Received Result	As Received Method Detection Limit	Units	Dilution Factor
07240	Heptane	142-82-5	7.0	0.20	ppb(v)	1
07241	Trichloroethene	79-01-6	49.	0.20	ppb(v)	1
07242	Ethyl Acrylate	140-88-5	N.D.	0.20	ppb(v)	1
07243	1,2-Dichloropropane	78-87-5	N.D.	0.20	ppb(v)	1
07244	Methyl Methacrylate	80-62-6	N.D.	0.20	ppb(v)	1
07245	Dibromomethane	74-95-3	N.D.	0.20	ppb(v)	1
07246	1,4-Dioxane	123-91-1	N.D.	0.20	ppb(v)	1
07247	Bromodichloromethane	75-27-4	N.D.	0.20	ppb(v)	1
07248	cis-1,3-Dichloropropene	10061-01-5	N.D.	0.20	ppb(v)	1
07249	4-Methyl-2-Pentanone	108-10-1	3.0	0.50	ppb(v)	1
07250	Toluene	108-88-3	52.	0.20	ppb(v)	1
07251	Octane	111-65-9	7.0	0.20	ppb(v)	1
07252	trans-1,3-Dichloropropene	10061-02-6	N.D.	0.20	ppb(v)	1
07253	Ethyl Methacrylate	97-63-2	N.D.	0.20	ppb(v)	1
07254	1,1,2-Trichloroethane	79-00-5	N.D.	0.20	ppb(v)	1
07255	Tetrachloroethene	127-18-4	220.	2.0	ppb(v)	12
07256	2-Hexanone	591-78-6	N.D.	0.50	ppb(v)	1
07257	Dibromochloromethane	124-48-1	N.D.	0.20	ppb(v)	1
07258	1,2-Dibromoethane	106-93-4	N.D.	0.20	ppb(v)	1
07259	Chlorobenzene	108-90-7	N.D.	0.20	ppb(v)	1
07260	1,1,1,2-Tetrachloroethane	630-20-6	N.D.	0.20	ppb(v)	1
07261	Ethylbenzene	100-41-4	18.	0.20	ppb(v)	1
07262	m/p-Xylene	1330-20-7	71.	0.20	ppb(v)	1
07263	o-Xylene	95-47-6	28.	0.20	ppb(v)	1
07264	Styrene	100-42-5	14.	0.20	ppb(v)	1
07265	Bromoform	75-25-2	N.D.	0.20	ppb(v)	1
07266	Cumene	98-82-8	2.0	0.20	ppb(v)	1
07267	1,1,2,2-Tetrachloroethane	79-34-5	N.D.	0.20	ppb(v)	1
07268	1,2,3-Trichloropropane	96-18-4	N.D.	0.20	ppb(v)	1
07269	Bromobenzene	108-86-1	N.D.	0.20	ppb(v)	1
07270	4-Ethyltoluene	622-96-8	22.	0.20	ppb(v)	1
07271	1,3,5-Trimethylbenzene	108-67-8	22.	0.20	ppb(v)	1
07272	Alpha Methyl Styrene	98-83-9	N.D.	0.20	ppb(v)	1
07273	1,2,4-Trimethylbenzene	95-63-6	26.	0.20	ppb(v)	1
07274	1,3-Dichlorobenzene	541-73-1	N.D.	0.50	ppb(v)	1
07275	1,4-Dichlorobenzene	106-46-7	N.D.	0.50	ppb(v)	1
07277	1,2-Dichlorobenzene	95-50-1	N.D.	0.50	ppb(v)	1
07278	Hexachloroethane	67-72-1	N.D.	0.20	ppb(v)	1
07279	1,2,4-Trichlorobenzene	120-82-1	N.D.	1.0	ppb(v)	1
07280	Hexachlorobutadiene	87-68-3	N.D.	0.50	ppb(v)	1

The sample was collected in a Tedlar bag which is not the container referenced in the EPA method.

Lancaster Laboratories

Analysis Report

2425 New Holland Pike, PO Box 12425, Lancaster, PA 17605-2425 • 717-656-2300 Fax: 717-656-2681 • www.lancasterlabs.com

Lancaster Laboratories Sample No. AQ 4554258

North_Bank_4 Tedlar Bag Grab Air Sample
Site Code: SC001 RFA #: ET05034
Dayton Thermal/Dayton, OH
Collected:06/29/2005 12:34 by BC

Account Number: 10160

Submitted: 06/30/2005 09:10
Reported: 07/12/2005 at 22:31
Discard: 09/11/2005

DaimlerChrysler Corporation
PO Box 537933
Livonia MI 48153-7933

NRTH4 SDG#: DCU07-03

CAT No.	Analysis Name	CAS Number	As Received Result	As Received Method Detection Limit	Units	Dilution Factor

Laboratory Chronicle

CAT No.	Analysis Name	Method	Trial#	Analysis Date and Time	Analyst	Dilution Factor
07869	TO-14A VOA Ext. List Tedlar	EPA Method TO14A	1	07/01/2005 21:54	Jeffrey B Smith	5
07869	TO-14A VOA Ext. List Tedlar	EPA Method TO14A	1	07/01/2005 22:32	Jeffrey B Smith	1
07869	TO-14A VOA Ext. List Tedlar	EPA Method TO14A	1	07/11/2005 03:02	Jeffrey B Smith	12

Lancaster Laboratories

2425 New Holland Pike, PO Box 12425, Lancaster, PA 17605-2425 • 717-656-2300 Fax: 717-656-2681 • www.lancasterlabs.com

Analysis Report

Lancaster Laboratories Sample No. AQ 4554259

North_Bank_6 Tedlar Bag Grab Air Sample
Site Code: SC001 RFA #: ET05034
Dayton Thermal/Dayton, OH
Collected:06/29/2005 12:49 by BC

Account Number: 10160

Submitted: 06/30/2005 09:10
Reported: 07/12/2005 at 22:31
Discard: 09/11/2005

DaimlerChrysler Corporation
PO Box 537933
Livonia MI 48153-7933

NRTH6 SDG#: DCU07-04

CAT No.	Analysis Name	CAS Number	As Received Result		As Received Method Detection Limit	Units	Dilution Factor
07869	TO-14A VOA Ext. List Tedlar						
02076	tert-Butyl Alcohol	75-65-0	N.D.		1.0	ppb(v)	5
07201	Propene	115-07-1	N.D.		1.0	ppb(v)	5
07202	Dichlorodifluoromethane	75-71-8	2.0	J	1.0	ppb(v)	5
07203	Chlorodifluoromethane	75-45-6	N.D.		5.0	ppb(v)	5
07204	Freon 114	76-14-2	N.D.		1.0	ppb(v)	5
07205	Chloromethane	74-87-3	N.D.		1.0	ppb(v)	5
07206	Vinyl Chloride	75-01-4	4.0	J	1.0	ppb(v)	5
07207	1,3-Butadiene	106-99-0	N.D.		5.0	ppb(v)	5
07208	Bromomethane	74-83-9	N.D.		1.0	ppb(v)	5
07209	Chloroethane	75-00-3	N.D.		1.0	ppb(v)	5
07210	Dichlorofluoromethane	75-43-4	N.D.		1.0	ppb(v)	5
07212	Trichlorofluoromethane	75-69-4	1.0	J	1.0	ppb(v)	5
07213	Pentane	109-66-0	11.		1.0	ppb(v)	5
07214	Acrolein	107-02-8	N.D.		3.0	ppb(v)	5
07215	1,1-Dichloroethene	75-35-4	8.0		1.0	ppb(v)	5
07216	Freon 113	76-13-1	5.0		3.0	ppb(v)	5
07217	Acetone	67-64-1	52.		5.0	ppb(v)	5
07218	Methyl Iodide	74-88-4	N.D.		1.0	ppb(v)	5
07219	Carbon Disulfide	75-15-0	11.		3.0	ppb(v)	5
07220	Acetonitrile	75-05-8	N.D.		3.0	ppb(v)	5
07221	3-Chloropropene	107-05-1	N.D.		3.0	ppb(v)	5
07222	Methylene Chloride	75-09-2	7.0		3.0	ppb(v)	5
07223	Acrylonitrile	107-13-1	N.D.		3.0	ppb(v)	5
07224	trans-1,2-Dichloroethene	156-60-5	6.0		1.0	ppb(v)	5
07225	Methyl t-Butyl Ether	1634-04-4	N.D.		1.0	ppb(v)	5
07226	Hexane	110-54-3	7.0		1.0	ppb(v)	5
07227	1,1-Dichloroethane	75-34-3	26.		1.0	ppb(v)	5
07228	Vinyl Acetate	108-05-4	N.D.		1.0	ppb(v)	5
07230	cis-1,2-Dichloroethene	156-59-2	72.		1.0	ppb(v)	5
07231	2-Butanone	78-93-3	4.0	J	3.0	ppb(v)	5
07232	Ethyl Acetate	141-78-6	N.D.		1.0	ppb(v)	5
07233	Methyl Acrylate	96-33-3	N.D.		1.0	ppb(v)	5
07234	Chloroform	67-66-3	4.0	J	1.0	ppb(v)	5
07235	1,1,1-Trichloroethane	71-55-6	160.		1.0	ppb(v)	5
07236	Carbon Tetrachloride	56-23-5	N.D.		1.0	ppb(v)	5
07237	1,2-Dichloroethane	107-06-2	N.D.		1.0	ppb(v)	5
07238	Benzene	71-43-2	5.0		1.0	ppb(v)	5
07239	Isooctane	540-84-1	1.0	J	1.0	ppb(v)	5

Lancaster Laboratories

2425 New Holland Pike, PO Box 12425, Lancaster, PA 17605-2425 • 717-656-2300 Fax: 717-656-2681 • www.lancasterlabs.com

Analysis Report

Lancaster Laboratories Sample No. AQ 4554259

North_Bank_6 Tedlar Bag Grab Air Sample
Site Code: SC001 RFA #: ET05034
Dayton Thermal/Dayton, OH
Collected:06/29/2005 12:49 by BC

Account Number: 10160

Submitted: 06/30/2005 09:10
Reported: 07/12/2005 at 22:31
Discard: 09/11/2005

DaimlerChrysler Corporation
PO Box 537933
Livonia MI 48153-7933

NRTH6 SDG#: DCU07-04

CAT No.	Analysis Name	CAS Number	As Received Result		As Received Method Detection Limit	Units	Dilution Factor
07240	Heptane	142-82-5	5.0		1.0	ppb(v)	5
07241	Trichloroethene	79-01-6	290.		1.0	ppb(v)	5
07242	Ethyl Acrylate	140-88-5	N.D.		1.0	ppb(v)	5
07243	1,2-Dichloropropane	78-87-5	N.D.		1.0	ppb(v)	5
07244	Methyl Methacrylate	80-62-6	N.D.		1.0	ppb(v)	5
07245	Dibromomethane	74-95-3	N.D.		1.0	ppb(v)	5
07246	1,4-Dioxane	123-91-1	N.D.		1.0	ppb(v)	5
07247	Bromodichloromethane	75-27-4	N.D.		1.0	ppb(v)	5
07248	cis-1,3-Dichloropropene	10061-01-5	N.D.		1.0	ppb(v)	5
07249	4-Methyl-2-Pentanone	108-10-1	N.D.		3.0	ppb(v)	5
07250	Toluene	108-88-3	38.		1.0	ppb(v)	5
07251	Octane	111-65-9	5.0		1.0	ppb(v)	5
07252	trans-1,3-Dichloropropene	10061-02-6	N.D.		1.0	ppb(v)	5
07253	Ethyl Methacrylate	97-63-2	N.D.		1.0	ppb(v)	5
07254	1,1,2-Trichloroethane	79-00-5	N.D.		1.0	ppb(v)	5
07255	Tetrachloroethene	127-18-4	510.		5.0	ppb(v)	25
07256	2-Hexanone	591-78-6	N.D.		3.0	ppb(v)	5
07257	Dibromochloromethane	124-48-1	N.D.		1.0	ppb(v)	5
07258	1,2-Dibromoethane	106-93-4	N.D.		1.0	ppb(v)	5
07259	Chlorobenzene	108-90-7	N.D.		1.0	ppb(v)	5
07260	1,1,1,2-Tetrachloroethane	630-20-6	N.D.		1.0	ppb(v)	5
07261	Ethylbenzene	100-41-4	13.		1.0	ppb(v)	5
07262	m/p-Xylene	1330-20-7	50.		1.0	ppb(v)	5
07263	o-Xylene	95-47-6	19.		1.0	ppb(v)	5
07264	Styrene	100-42-5	8.0		1.0	ppb(v)	5
07265	Bromoform	75-25-2	N.D.		1.0	ppb(v)	5
07266	Cumene	98-82-8	1.0	J	1.0	ppb(v)	5
07267	1,1,2,2-Tetrachloroethane	79-34-5	N.D.		1.0	ppb(v)	5
07268	1,2,3-Trichloropropane	96-18-4	N.D.		1.0	ppb(v)	5
07269	Bromobenzene	108-86-1	N.D.		1.0	ppb(v)	5
07270	4-Ethyltoluene	622-96-8	12.		1.0	ppb(v)	5
07271	1,3,5-Trimethylbenzene	108-67-8	6.0		1.0	ppb(v)	5
07272	Alpha Methyl Styrene	98-83-9	N.D.		1.0	ppb(v)	5
07273	1,2,4-Trimethylbenzene	95-63-6	15.		1.0	ppb(v)	5
07274	1,3-Dichlorobenzene	541-73-1	N.D.		3.0	ppb(v)	5
07275	1,4-Dichlorobenzene	106-46-7	N.D.		3.0	ppb(v)	5
07277	1,2-Dichlorobenzene	95-50-1	N.D.		3.0	ppb(v)	5
07278	Hexachloroethane	67-72-1	N.D.		1.0	ppb(v)	5
07279	1,2,4-Trichlorobenzene	120-82-1	N.D.		5.0	ppb(v)	5
07280	Hexachlorobutadiene	87-68-3	N.D.		3.0	ppb(v)	5

The sample was collected in a Tedlar bag which is not the container referenced in the EPA method.

Lancaster Laboratories

2425 New Holland Pike, PO Box 12425, Lancaster, PA 17605-2425 • 717-656-2300 Fax: 717-656-2681 • www.lancasterlabs.com

Analysis Report

Lancaster Laboratories Sample No. AQ 4554259

North_Bank_6 Tedlar Bag Grab Air Sample
Site Code: SC001 RFA #: ET05034
Dayton Thermal/Dayton, OH
Collected:06/29/2005 12:49 by BC

Account Number: 10160

Submitted: 06/30/2005 09:10
Reported: 07/12/2005 at 22:31
Discard: 09/11/2005

DaimlerChrysler Corporation
PO Box 537933
Livonia MI 48153-7933

NRTH6 SDG#: DCU07-04

CAT No.	Analysis Name	CAS Number	As Received Result	As Received Method Detection Limit	Units	Dilution Factor

The reporting limits for the GC/MS volatile compounds were raised because sample dilution was necessary to bring target compounds into the calibration range of the system.

Laboratory Chronicle

CAT No.	Analysis Name	Method	Trial#	Analysis Date and Time	Analyst	Dilution Factor
07869	TO-14A VOA Ext. List Tedlar	EPA Method TO14A	1	07/01/2005 23:09	Jeffrey B Smith	5
07869	TO-14A VOA Ext. List Tedlar	EPA Method TO14A	1	07/11/2005 03:40	Jeffrey B Smith	25

Lancaster Laboratories

Analysis Report

2425 New Holland Pike, PO Box 12425, Lancaster, PA 17605-2425 • 717-656-2300 Fax: 717-656-2681 • www.lancasterlabs.com

Lancaster Laboratories Sample No. AQ 4554260

South_Bank_C Tedlar Bag Grab Air Sample
Site Code: SC001 RFA #: ET05034
Dayton Thermal/Dayton, OH
Collected:06/29/2005 13:15 by BC

Account Number: 10160

Submitted: 06/30/2005 09:10
Reported: 07/12/2005 at 22:31
Discard: 09/11/2005

DaimlerChrysler Corporation
PO Box 537933
Livonia MI 48153-7933

SOUTC SDG#: DCU07-05

CAT No.	Analysis Name	CAS Number	As Received Result		As Received Method Detection Limit	Units	Dilution Factor
07869	TO-14A VOA Ext. List Tedlar						
02076	tert-Butyl Alcohol	75-65-0	N.D.		0.20	ppb(v)	1
07201	Propene	115-07-1	N.D.		0.20	ppb(v)	1
07202	Dichlorodifluoromethane	75-71-8	2.0		0.20	ppb(v)	1
07203	Chlorodifluoromethane	75-45-6	2.0		1.0	ppb(v)	1
07204	Freon 114	76-14-2	N.D.		0.20	ppb(v)	1
07205	Chloromethane	74-87-3	0.90	J	0.20	ppb(v)	1
07206	Vinyl Chloride	75-01-4	0.70	J	0.20	ppb(v)	1
07207	1,3-Butadiene	106-99-0	N.D.		1.0	ppb(v)	1
07208	Bromomethane	74-83-9	N.D.		0.20	ppb(v)	1
07209	Chloroethane	75-00-3	N.D.		0.20	ppb(v)	1
07210	Dichlorofluoromethane	75-43-4	N.D.		0.20	ppb(v)	1
07212	Trichlorofluoromethane	75-69-4	1.0		0.20	ppb(v)	1
07213	Pentane	109-66-0	4.0		0.20	ppb(v)	1
07214	Acrolein	107-02-8	13.		0.50	ppb(v)	1
07215	1,1-Dichloroethene	75-35-4	60.		0.20	ppb(v)	1
07216	Freon 113	76-13-1	15.		0.50	ppb(v)	1
07217	Acetone	67-64-1	140.		5.0	ppb(v)	5
07218	Methyl Iodide	74-88-4	N.D.		0.20	ppb(v)	1
07219	Carbon Disulfide	75-15-0	14.		0.50	ppb(v)	1
07220	Acetonitrile	75-05-8	13.		0.50	ppb(v)	1
07221	3-Chloropropene	107-05-1	N.D.		0.50	ppb(v)	1
07222	Methylene Chloride	75-09-2	11.		0.50	ppb(v)	1
07223	Acrylonitrile	107-13-1	N.D.		0.50	ppb(v)	1
07224	trans-1,2-Dichloroethene	156-60-5	4.0		0.20	ppb(v)	1
07225	Methyl t-Butyl Ether	1634-04-4	N.D.		0.20	ppb(v)	1
07226	Hexane	110-54-3	7.0		0.20	ppb(v)	1
07227	1,1-Dichloroethane	75-34-3	120.		1.0	ppb(v)	5
07228	Vinyl Acetate	108-05-4	N.D.		0.20	ppb(v)	1
07230	cis-1,2-Dichloroethene	156-59-2	200.		1.0	ppb(v)	5
07231	2-Butanone	78-93-3	6.0		0.50	ppb(v)	1
07232	Ethyl Acetate	141-78-6	N.D.		0.20	ppb(v)	1
07233	Methyl Acrylate	96-33-3	N.D.		0.20	ppb(v)	1
07234	Chloroform	67-66-3	3.0		0.20	ppb(v)	1
07235	1,1,1-Trichloroethane	71-55-6	320.		1.0	ppb(v)	5
07236	Carbon Tetrachloride	56-23-5	N.D.		0.20	ppb(v)	1
07237	1,2-Dichloroethane	107-06-2	N.D.		0.20	ppb(v)	1
07238	Benzene	71-43-2	2.0		0.20	ppb(v)	1
07239	Isooctane	540-84-1	2.0		0.20	ppb(v)	1

Lancaster Laboratories

2425 New Holland Pike, PO Box 12425, Lancaster, PA 17605-2425 • 717-656-2300 Fax: 717-656-2681 • www.lancasterlabs.com

Analysis Report

Lancaster Laboratories Sample No. AQ 4554260

South_Bank_C Tedlar Bag Grab Air Sample
Site Code: SC001 RFA #: ET05034
Dayton Thermal/Dayton, OH
Collected:06/29/2005 13:15 by BC

Account Number: 10160

Submitted: 06/30/2005 09:10
Reported: 07/12/2005 at 22:31
Discard: 09/11/2005

DaimlerChrysler Corporation
PO Box 537933
Livonia MI 48153-7933

SOUTC SDG#: DCU07-05

CAT No.	Analysis Name	CAS Number	As Received Result	As Received Method Detection Limit	Units	Dilution Factor
07240	Heptane	142-82-5	3.0	0.20	ppb(v)	1
07241	Trichloroethene	79-01-6	350.	1.0	ppb(v)	5
07242	Ethyl Acrylate	140-88-5	N.D.	0.20	ppb(v)	1
07243	1,2-Dichloropropane	78-87-5	N.D.	0.20	ppb(v)	1
07244	Methyl Methacrylate	80-62-6	N.D.	0.20	ppb(v)	1
07245	Dibromomethane	74-95-3	N.D.	0.20	ppb(v)	1
07246	1,4-Dioxane	123-91-1	N.D.	0.20	ppb(v)	1
07247	Bromodichloromethane	75-27-4	N.D.	0.20	ppb(v)	1
07248	cis-1,3-Dichloropropene	10061-01-5	N.D.	0.20	ppb(v)	1
07249	4-Methyl-2-Pentanone	108-10-1	N.D.	0.50	ppb(v)	1
07250	Toluene	108-88-3	14.	0.20	ppb(v)	1
07251	Octane	111-65-9	2.0	0.20	ppb(v)	1
07252	trans-1,3-Dichloropropene	10061-02-6	N.D.	0.20	ppb(v)	1
07253	Ethyl Methacrylate	97-63-2	N.D.	0.20	ppb(v)	1
07254	1,1,2-Trichloroethane	79-00-5	N.D.	0.20	ppb(v)	1
07255	Tetrachloroethene	127-18-4	230.	1.0	ppb(v)	5
07256	2-Hexanone	591-78-6	N.D.	0.50	ppb(v)	1
07257	Dibromochloromethane	124-48-1	N.D.	0.20	ppb(v)	1
07258	1,2-Dibromoethane	106-93-4	N.D.	0.20	ppb(v)	1
07259	Chlorobenzene	108-90-7	N.D.	0.20	ppb(v)	1
07260	1,1,1,2-Tetrachloroethane	630-20-6	N.D.	0.20	ppb(v)	1
07261	Ethylbenzene	100-41-4	5.0	0.20	ppb(v)	1
07262	m/p-Xylene	1330-20-7	18.	0.20	ppb(v)	1
07263	o-Xylene	95-47-6	8.0	0.20	ppb(v)	1
07264	Styrene	100-42-5	3.0	0.20	ppb(v)	1
07265	Bromoform	75-25-2	N.D.	0.20	ppb(v)	1
07266	Cumene	98-82-8	0.80 J	0.20	ppb(v)	1
07267	1,1,2,2-Tetrachloroethane	79-34-5	N.D.	0.20	ppb(v)	1
07268	1,2,3-Trichloropropane	96-18-4	N.D.	0.20	ppb(v)	1
07269	Bromobenzene	108-86-1	N.D.	0.20	ppb(v)	1
07270	4-Ethyltoluene	622-96-8	5.0	0.20	ppb(v)	1
07271	1,3,5-Trimethylbenzene	108-67-8	3.0	0.20	ppb(v)	1
07272	Alpha Methyl Styrene	98-83-9	N.D.	0.20	ppb(v)	1
07273	1,2,4-Trimethylbenzene	95-63-6	7.0	0.20	ppb(v)	1
07274	1,3-Dichlorobenzene	541-73-1	N.D.	0.50	ppb(v)	1
07275	1,4-Dichlorobenzene	106-46-7	N.D.	0.50	ppb(v)	1
07277	1,2-Dichlorobenzene	95-50-1	N.D.	0.50	ppb(v)	1
07278	Hexachloroethane	67-72-1	N.D.	0.20	ppb(v)	1
07279	1,2,4-Trichlorobenzene	120-82-1	N.D.	1.0	ppb(v)	1
07280	Hexachlorobutadiene	87-68-3	N.D.	0.50	ppb(v)	1

The sample was collected in a Tedlar bag which is not the container referenced in the EPA method.

Lancaster Laboratories

2425 New Holland Pike, PO Box 12425, Lancaster, PA 17605-2425 • 717-656-2300 Fax: 717-656-2681 • www.lancasterlabs.com

Analysis Report

Lancaster Laboratories Sample No. AQ 4554260

South_Bank_C Tedlar Bag Grab Air Sample
Site Code: SC001 RFA #: ET05034
Dayton Thermal/Dayton, OH
Collected:06/29/2005 13:15 by BC

Account Number: 10160

Submitted: 06/30/2005 09:10
Reported: 07/12/2005 at 22:31
Discard: 09/11/2005

DaimlerChrysler Corporation
PO Box 537933
Livonia MI 48153-7933

SOUTC SDG#: DCU07-05

CAT No.	Analysis Name	CAS Number	As Received Result	As Received Method Detection Limit	Units	Dilution Factor

Laboratory Chronicle

CAT No.	Analysis Name	Method	Trial#	Analysis Date and Time	Analyst	Dilution Factor
07869	TO-14A VOA Ext. List Tedlar	EPA Method TO14A	1	07/11/2005 04:17	George M Main	5
07869	TO-14A VOA Ext. List Tedlar	EPA Method TO14A	1	07/11/2005 04:55	George M Main	1

Lancaster Laboratories

2425 New Holland Pike, PO Box 12425, Lancaster, PA 17605-2425 • 717-656-2300 Fax: 717-656-2681 • www.lancasterlabs.com

Analysis Report

Lancaster Laboratories Sample No. AQ 4554261

South_Bank_E Tedlar Bag Grab Air Sample
Site Code: SC001 RFA #: ET05034
Dayton Thermal/Dayton, OH
Collected:06/29/2005 13:30 by BC

Account Number: 10160

Submitted: 06/30/2005 09:10
Reported: 07/12/2005 at 22:32
Discard: 09/11/2005

DaimlerChrysler Corporation
PO Box 537933
Livonia MI 48153-7933

SOUTE SDG#: DCU07-06

CAT No.	Analysis Name	CAS Number	As Received Result		As Received Method Detection Limit	Units	Dilution Factor
07869	TO-14A VOA Ext. List Tedlar						
02076	tert-Butyl Alcohol	75-65-0	N.D.		0.20	ppb(v)	1
07201	Propene	115-07-1	N.D.		0.20	ppb(v)	1
07202	Dichlorodifluoromethane	75-71-8	1.0		0.20	ppb(v)	1
07203	Chlorodifluoromethane	75-45-6	N.D.		1.0	ppb(v)	1
07204	Freon 114	76-14-2	N.D.		0.20	ppb(v)	1
07205	Chloromethane	74-87-3	0.80	J	0.20	ppb(v)	1
07206	Vinyl Chloride	75-01-4	2.0		0.20	ppb(v)	1
07207	1,3-Butadiene	106-99-0	N.D.		1.0	ppb(v)	1
07208	Bromomethane	74-83-9	N.D.		0.20	ppb(v)	1
07209	Chloroethane	75-00-3	2.0		0.20	ppb(v)	1
07210	Dichlorofluoromethane	75-43-4	N.D.		0.20	ppb(v)	1
07212	Trichlorofluoromethane	75-69-4	1.0		0.20	ppb(v)	1
07213	Pentane	109-66-0	3.0		0.20	ppb(v)	1
07214	Acrolein	107-02-8	11.		0.50	ppb(v)	1
07215	1,1-Dichloroethene	75-35-4	8.0		0.20	ppb(v)	1
07216	Freon 113	76-13-1	4.0		0.50	ppb(v)	1
07217	Acetone	67-64-1	120.		5.0	ppb(v)	5
07218	Methyl Iodide	74-88-4	N.D.		0.20	ppb(v)	1
07219	Carbon Disulfide	75-15-0	43.		0.50	ppb(v)	1
07220	Acetonitrile	75-05-8	12.		0.50	ppb(v)	1
07221	3-Chloropropene	107-05-1	N.D.		0.50	ppb(v)	1
07222	Methylene Chloride	75-09-2	N.D.		0.50	ppb(v)	1
07223	Acrylonitrile	107-13-1	N.D.		0.50	ppb(v)	1
07224	trans-1,2-Dichloroethene	156-60-5	3.0		0.20	ppb(v)	1
07225	Methyl t-Butyl Ether	1634-04-4	N.D.		0.20	ppb(v)	1
07226	Hexane	110-54-3	2.0		0.20	ppb(v)	1
07227	1,1-Dichloroethane	75-34-3	110.		1.0	ppb(v)	5
07228	Vinyl Acetate	108-05-4	N.D.		0.20	ppb(v)	1
07230	cis-1,2-Dichloroethene	156-59-2	89.		0.20	ppb(v)	1
07231	2-Butanone	78-93-3	7.0		0.50	ppb(v)	1
07232	Ethyl Acetate	141-78-6	N.D.		0.20	ppb(v)	1
07233	Methyl Acrylate	96-33-3	N.D.		0.20	ppb(v)	1
07234	Chloroform	67-66-3	4.0		0.20	ppb(v)	1
07235	1,1,1-Trichloroethane	71-55-6	200.		1.0	ppb(v)	5
07236	Carbon Tetrachloride	56-23-5	N.D.		0.20	ppb(v)	1
07237	1,2-Dichloroethane	107-06-2	N.D.		0.20	ppb(v)	1
07238	Benzene	71-43-2	2.0		0.20	ppb(v)	1
07239	Isooctane	540-84-1	0.90	J	0.20	ppb(v)	1

Lancaster Laboratories

2425 New Holland Pike, PO Box 12425, Lancaster, PA 17605-2425 • 717-656-2300 Fax: 717-656-2681 • www.lancasterlabs.com

Analysis Report

Lancaster Laboratories Sample No. AQ 4554261

South_Bank_E Tedlar Bag Grab Air Sample
Site Code: SC001 RFA #: ET05034
Dayton Thermal/Dayton, OH
Collected:06/29/2005 13:30 by BC

Account Number: 10160

Submitted: 06/30/2005 09:10
Reported: 07/12/2005 at 22:32
Discard: 09/11/2005

DaimlerChrysler Corporation
PO Box 537933
Livonia MI 48153-7933

SOUTE SDG#: DCU07-06

CAT No.	Analysis Name	CAS Number	As Received Result		As Received Method Detection Limit	Units	Dilution Factor
07240	Heptane	142-82-5	2.0		0.20	ppb(v)	1
07241	Trichloroethene	79-01-6	340.		1.0	ppb(v)	5
07242	Ethyl Acrylate	140-88-5	N.D.		0.20	ppb(v)	1
07243	1,2-Dichloropropane	78-87-5	N.D.		0.20	ppb(v)	1
07244	Methyl Methacrylate	80-62-6	N.D.		0.20	ppb(v)	1
07245	Dibromomethane	74-95-3	N.D.		0.20	ppb(v)	1
07246	1,4-Dioxane	123-91-1	N.D.		0.20	ppb(v)	1
07247	Bromodichloromethane	75-27-4	N.D.		0.20	ppb(v)	1
07248	cis-1,3-Dichloropropene	10061-01-5	N.D.		0.20	ppb(v)	1
07249	4-Methyl-2-Pentanone	108-10-1	N.D.		0.50	ppb(v)	1
07250	Toluene	108-88-3	9.0		0.20	ppb(v)	1
07251	Octane	111-65-9	2.0		0.20	ppb(v)	1
07252	trans-1,3-Dichloropropene	10061-02-6	N.D.		0.20	ppb(v)	1
07253	Ethyl Methacrylate	97-63-2	N.D.		0.20	ppb(v)	1
07254	1,1,2-Trichloroethane	79-00-5	N.D.		0.20	ppb(v)	1
07255	Tetrachloroethene	127-18-4	430.		1.0	ppb(v)	5
07256	2-Hexanone	591-78-6	N.D.		0.50	ppb(v)	1
07257	Dibromochloromethane	124-48-1	N.D.		0.20	ppb(v)	1
07258	1,2-Dibromoethane	106-93-4	N.D.		0.20	ppb(v)	1
07259	Chlorobenzene	108-90-7	N.D.		0.20	ppb(v)	1
07260	1,1,1,2-Tetrachloroethane	630-20-6	N.D.		0.20	ppb(v)	1
07261	Ethylbenzene	100-41-4	4.0		0.20	ppb(v)	1
07262	m/p-Xylene	1330-20-7	14.		0.20	ppb(v)	1
07263	o-Xylene	95-47-6	6.0		0.20	ppb(v)	1
07264	Styrene	100-42-5	3.0		0.20	ppb(v)	1
07265	Bromoform	75-25-2	N.D.		0.20	ppb(v)	1
07266	Cumene	98-82-8	0.70	J	0.20	ppb(v)	1
07267	1,1,2,2-Tetrachloroethane	79-34-5	N.D.		0.20	ppb(v)	1
07268	1,2,3-Trichloropropane	96-18-4	N.D.		0.20	ppb(v)	1
07269	Bromobenzene	108-86-1	N.D.		0.20	ppb(v)	1
07270	4-Ethyltoluene	622-96-8	6.0		0.20	ppb(v)	1
07271	1,3,5-Trimethylbenzene	108-67-8	3.0		0.20	ppb(v)	1
07272	Alpha Methyl Styrene	98-83-9	N.D.		0.20	ppb(v)	1
07273	1,2,4-Trimethylbenzene	95-63-6	8.0		0.20	ppb(v)	1
07274	1,3-Dichlorobenzene	541-73-1	N.D.		0.50	ppb(v)	1
07275	1,4-Dichlorobenzene	106-46-7	N.D.		0.50	ppb(v)	1
07277	1,2-Dichlorobenzene	95-50-1	N.D.		0.50	ppb(v)	1
07278	Hexachloroethane	67-72-1	N.D.		0.20	ppb(v)	1
07279	1,2,4-Trichlorobenzene	120-82-1	N.D.		1.0	ppb(v)	1
07280	Hexachlorobutadiene	87-68-3	N.D.		0.50	ppb(v)	1

The sample was collected in a Tedlar bag which is not the container referenced in the EPA method.

Lancaster Laboratories

Analysis Report

2425 New Holland Pike, PO Box 12425, Lancaster, PA 17605-2425 • 717-656-2300 Fax: 717-656-2681 • www.lancasterlabs.com

Lancaster Laboratories Sample No. AQ 4554261

South_Bank_E Tedlar Bag Grab Air Sample
Site Code: SC001 RFA #: ET05034
Dayton Thermal/Dayton, OH
Collected:06/29/2005 13:30 by BC

Account Number: 10160

Submitted: 06/30/2005 09:10
Reported: 07/12/2005 at 22:32
Discard: 09/11/2005

DaimlerChrysler Corporation
PO Box 537933
Livonia MI 48153-7933

SOUTE SDG#: DCU07-06

CAT No.	Analysis Name	CAS Number	As Received Result	As Received Method Detection Limit	Units	Dilution Factor

Laboratory Chronicle

CAT No.	Analysis Name	Method	Trial#	Analysis Date and Time	Analyst	Dilution Factor
07869	TO-14A VOA Ext. List Tedlar	EPA Method TO14A	1	07/11/2005 05:33	George M Main	5
07869	TO-14A VOA Ext. List Tedlar	EPA Method TO14A	1	07/11/2005 06:10	George M Main	1

Lancaster Laboratories

2425 New Holland Pike, PO Box 12425, Lancaster, PA 17605-2425 • 717-656-2300 Fax: 717-656-2681 • www.lancasterlabs.com

Analysis Report

Lancaster Laboratories Sample No. AQ 4554262

South_Bank_F Tedlar Bag Grab Air Sample
Site Code: SC001 RFA #: ET05034
Dayton Thermal/Dayton, OH
Collected:06/29/2005 13:45 by BC

Account Number: 10160

Submitted: 06/30/2005 09:10
Reported: 07/12/2005 at 22:32
Discard: 09/11/2005

DaimlerChrysler Corporation
PO Box 537933
Livonia MI 48153-7933

SOUTF SDG#: DCU07-07

CAT No.	Analysis Name	CAS Number	As Received Result		As Received Method Detection Limit	Units	Dilution Factor
07869	TO-14A VOA Ext. List Tedlar						
02076	tert-Butyl Alcohol	75-65-0	N.D.		1.0	ppb(v)	5
07201	Propene	115-07-1	N.D.		1.0	ppb(v)	5
07202	Dichlorodifluoromethane	75-71-8	3.0	J	1.0	ppb(v)	5
07203	Chlorodifluoromethane	75-45-6	N.D.		5.0	ppb(v)	5
07204	Freon 114	76-14-2	N.D.		1.0	ppb(v)	5
07205	Chloromethane	74-87-3	N.D.		1.0	ppb(v)	5
07206	Vinyl Chloride	75-01-4	N.D.		1.0	ppb(v)	5
07207	1,3-Butadiene	106-99-0	N.D.		5.0	ppb(v)	5
07208	Bromomethane	74-83-9	N.D.		1.0	ppb(v)	5
07209	Chloroethane	75-00-3	N.D.		1.0	ppb(v)	5
07210	Dichlorofluoromethane	75-43-4	N.D.		1.0	ppb(v)	5
07212	Trichlorofluoromethane	75-69-4	5.0		1.0	ppb(v)	5
07213	Pentane	109-66-0	17.		1.0	ppb(v)	5
07214	Acrolein	107-02-8	29.		3.0	ppb(v)	5
07215	1,1-Dichloroethene	75-35-4	9.0		1.0	ppb(v)	5
07216	Freon 113	76-13-1	14.		3.0	ppb(v)	5
07217	Acetone	67-64-1	350.		5.0	ppb(v)	5
07218	Methyl Iodide	74-88-4	N.D.		1.0	ppb(v)	5
07219	Carbon Disulfide	75-15-0	270.		3.0	ppb(v)	5
07220	Acetonitrile	75-05-8	N.D.		3.0	ppb(v)	5
07221	3-Chloropropene	107-05-1	N.D.		3.0	ppb(v)	5
07222	Methylene Chloride	75-09-2	51.		3.0	ppb(v)	5
07223	Acrylonitrile	107-13-1	N.D.		3.0	ppb(v)	5
07224	trans-1,2-Dichloroethene	156-60-5	3.0	J	1.0	ppb(v)	5
07225	Methyl t-Butyl Ether	1634-04-4	N.D.		1.0	ppb(v)	5
07226	Hexane	110-54-3	29.		1.0	ppb(v)	5
07227	1,1-Dichloroethane	75-34-3	59.		1.0	ppb(v)	5
07228	Vinyl Acetate	108-05-4	N.D.		1.0	ppb(v)	5
07230	cis-1,2-Dichloroethene	156-59-2	110.		1.0	ppb(v)	5
07231	2-Butanone	78-93-3	N.D.		3.0	ppb(v)	5
07232	Ethyl Acetate	141-78-6	N.D.		1.0	ppb(v)	5
07233	Methyl Acrylate	96-33-3	N.D.		1.0	ppb(v)	5
07234	Chloroform	67-66-3	3.0	J	1.0	ppb(v)	5
07235	1,1,1-Trichloroethane	71-55-6	120.		1.0	ppb(v)	5
07236	Carbon Tetrachloride	56-23-5	N.D.		1.0	ppb(v)	5
07237	1,2-Dichloroethane	107-06-2	N.D.		1.0	ppb(v)	5
07238	Benzene	71-43-2	3.0	J	1.0	ppb(v)	5
07239	Isooctane	540-84-1	2.0	J	1.0	ppb(v)	5

Lancaster Laboratories

2425 New Holland Pike, PO Box 12425, Lancaster, PA 17605-2425 • 717-656-2300 Fax: 717-656-2681 • www.lancasterlabs.com

Analysis Report

Lancaster Laboratories Sample No. AQ 4554262

South_Bank_F Tedlar Bag Grab Air Sample
Site Code: SC001 RFA #: ET05034
Dayton Thermal/Dayton, OH
Collected:06/29/2005 13:45 by BC

Account Number: 10160

Submitted: 06/30/2005 09:10
Reported: 07/12/2005 at 22:32
Discard: 09/11/2005

DaimlerChrysler Corporation
PO Box 537933
Livonia MI 48153-7933

SOUTF SDG#: DCU07-07

CAT No.	Analysis Name	CAS Number	As Received Result		As Received Method Detection Limit	Units	Dilution Factor
07240	Heptane	142-82-5	2.0	J	1.0	ppb(v)	5
07241	Trichloroethene	79-01-6	310.		1.0	ppb(v)	5
07242	Ethyl Acrylate	140-88-5	N.D.		1.0	ppb(v)	5
07243	1,2-Dichloropropane	78-87-5	N.D.		1.0	ppb(v)	5
07244	Methyl Methacrylate	80-62-6	N.D.		1.0	ppb(v)	5
07245	Dibromomethane	74-95-3	N.D.		1.0	ppb(v)	5
07246	1,4-Dioxane	123-91-1	N.D.		1.0	ppb(v)	5
07247	Bromodichloromethane	75-27-4	N.D.		1.0	ppb(v)	5
07248	cis-1,3-Dichloropropene	10061-01-5	N.D.		1.0	ppb(v)	5
07249	4-Methyl-2-Pentanone	108-10-1	N.D.		3.0	ppb(v)	5
07250	Toluene	108-88-3	33.		1.0	ppb(v)	5
07251	Octane	111-65-9	3.0	J	1.0	ppb(v)	5
07252	trans-1,3-Dichloropropene	10061-02-6	N.D.		1.0	ppb(v)	5
07253	Ethyl Methacrylate	97-63-2	N.D.		1.0	ppb(v)	5
07254	1,1,2-Trichloroethane	79-00-5	N.D.		1.0	ppb(v)	5
07255	Tetrachloroethene	127-18-4	680.		10.	ppb(v)	50
07256	2-Hexanone	591-78-6	N.D.		3.0	ppb(v)	5
07257	Dibromochloromethane	124-48-1	N.D.		1.0	ppb(v)	5
07258	1,2-Dibromoethane	106-93-4	N.D.		1.0	ppb(v)	5
07259	Chlorobenzene	108-90-7	N.D.		1.0	ppb(v)	5
07260	1,1,1,2-Tetrachloroethane	630-20-6	N.D.		1.0	ppb(v)	5
07261	Ethylbenzene	100-41-4	6.0		1.0	ppb(v)	5
07262	m/p-Xylene	1330-20-7	15.		1.0	ppb(v)	5
07263	o-Xylene	95-47-6	6.0		1.0	ppb(v)	5
07264	Styrene	100-42-5	6.0		1.0	ppb(v)	5
07265	Bromoform	75-25-2	N.D.		1.0	ppb(v)	5
07266	Cumene	98-82-8	N.D.		1.0	ppb(v)	5
07267	1,1,2,2-Tetrachloroethane	79-34-5	N.D.		1.0	ppb(v)	5
07268	1,2,3-Trichloropropane	96-18-4	N.D.		1.0	ppb(v)	5
07269	Bromobenzene	108-86-1	N.D.		1.0	ppb(v)	5
07270	4-Ethyltoluene	622-96-8	3.0	J	1.0	ppb(v)	5
07271	1,3,5-Trimethylbenzene	108-67-8	2.0	J	1.0	ppb(v)	5
07272	Alpha Methyl Styrene	98-83-9	N.D.		1.0	ppb(v)	5
07273	1,2,4-Trimethylbenzene	95-63-6	5.0		1.0	ppb(v)	5
07274	1,3-Dichlorobenzene	541-73-1	N.D.		3.0	ppb(v)	5
07275	1,4-Dichlorobenzene	106-46-7	N.D.		3.0	ppb(v)	5
07277	1,2-Dichlorobenzene	95-50-1	N.D.		3.0	ppb(v)	5
07278	Hexachloroethane	67-72-1	N.D.		1.0	ppb(v)	5
07279	1,2,4-Trichlorobenzene	120-82-1	N.D.		5.0	ppb(v)	5
07280	Hexachlorobutadiene	87-68-3	N.D.		3.0	ppb(v)	5

The sample was collected in a Tedlar bag which is not the container referenced in the EPA method.

Lancaster Laboratories

2425 New Holland Pike, PO Box 12425, Lancaster, PA 17605-2425 • 717-656-2300 Fax: 717-656-2681 • www.lancasterlabs.com

Analysis Report

Lancaster Laboratories Sample No. AQ 4554262

South_Bank_F Tedlar Bag Grab Air Sample
Site Code: SC001 RFA #: ET05034
Dayton Thermal/Dayton, OH
Collected:06/29/2005 13:45 by BC

Account Number: 10160

Submitted: 06/30/2005 09:10
Reported: 07/12/2005 at 22:32
Discard: 09/11/2005

DaimlerChrysler Corporation
PO Box 537933
Livonia MI 48153-7933

SOUTF SDG#: DCU07-07

CAT No.	Analysis Name	CAS Number	As Received Result	As Received Method Detection Limit	Units	Dilution Factor

The reporting limits for the GC/MS volatile compounds were raised because sample dilution was necessary to bring target compounds into the calibration range of the system.

Laboratory Chronicle

CAT No.	Analysis Name	Method	Trial#	Analysis Date and Time	Analyst	Dilution Factor
07869	TO-14A VOA Ext. List Tedlar	EPA Method TO14A	1	07/11/2005 06:48	George M Main	50
07869	TO-14A VOA Ext. List Tedlar	EPA Method TO14A	1	07/11/2005 07:26	George M Main	5

Lancaster Laboratories

Analysis Report

2425 New Holland Pike, PO Box 12425, Lancaster, PA 17605-2425 • 717-656-2300 Fax: 717-656-2681 • www.lancasterlabs.com

Lancaster Laboratories Sample No. AQ 4554263

South_Bank_G Tedlar Bag Grab Air Sample
Site Code: SC001 RFA #: ET05034
Dayton Thermal/Dayton, OH
Collected:06/29/2005 14:00 by BC

Account Number: 10160

Submitted: 06/30/2005 09:10
Reported: 07/12/2005 at 22:32
Discard: 09/11/2005

DaimlerChrysler Corporation
PO Box 537933
Livonia MI 48153-7933

SOUTG SDG#: DCU07-08

CAT No.	Analysis Name	CAS Number	As Received Result		As Received Method Detection Limit	Units	Dilution Factor
07869	TO-14A VOA Ext. List Tedlar						
02076	tert-Butyl Alcohol	75-65-0	18.		0.50	ppb(v)	2.5
07201	Propene	115-07-1	N.D.		0.50	ppb(v)	2.5
07202	Dichlorodifluoromethane	75-71-8	0.90	J	0.50	ppb(v)	2.5
07203	Chlorodifluoromethane	75-45-6	N.D.		3.0	ppb(v)	2.5
07204	Freon 114	76-14-2	N.D.		0.50	ppb(v)	2.5
07205	Chloromethane	74-87-3	N.D.		0.50	ppb(v)	2.5
07206	Vinyl Chloride	75-01-4	N.D.		0.50	ppb(v)	2.5
07207	1,3-Butadiene	106-99-0	N.D.		3.0	ppb(v)	2.5
07208	Bromomethane	74-83-9	N.D.		0.50	ppb(v)	2.5
07209	Chloroethane	75-00-3	13.		0.50	ppb(v)	2.5
07210	Dichlorofluoromethane	75-43-4	N.D.		0.50	ppb(v)	2.5
07212	Trichlorofluoromethane	75-69-4	2.0	J	0.50	ppb(v)	2.5
07213	Pentane	109-66-0	4.0		0.50	ppb(v)	2.5
07214	Acrolein	107-02-8	6.0		1.0	ppb(v)	2.5
07215	1,1-Dichloroethene	75-35-4	91.		0.50	ppb(v)	2.5
07216	Freon 113	76-13-1	15.		1.0	ppb(v)	2.5
07217	Acetone	67-64-1	96.		3.0	ppb(v)	2.5
07218	Methyl Iodide	74-88-4	N.D.		0.50	ppb(v)	2.5
07219	Carbon Disulfide	75-15-0	34.		1.0	ppb(v)	2.5
07220	Acetonitrile	75-05-8	34.		1.0	ppb(v)	2.5
07221	3-Chloropropene	107-05-1	N.D.		1.0	ppb(v)	2.5
07222	Methylene Chloride	75-09-2	12.		1.0	ppb(v)	2.5
07223	Acrylonitrile	107-13-1	N.D.		1.0	ppb(v)	2.5
07224	trans-1,2-Dichloroethene	156-60-5	5.0		0.50	ppb(v)	2.5
07225	Methyl t-Butyl Ether	1634-04-4	N.D.		0.50	ppb(v)	2.5
07226	Hexane	110-54-3	2.0	J	0.50	ppb(v)	2.5
07227	1,1-Dichloroethane	75-34-3	84.		0.50	ppb(v)	2.5
07228	Vinyl Acetate	108-05-4	1.0	J	0.50	ppb(v)	2.5
07230	cis-1,2-Dichloroethene	156-59-2	170.		0.50	ppb(v)	2.5
07231	2-Butanone	78-93-3	N.D.		1.0	ppb(v)	2.5
07232	Ethyl Acetate	141-78-6	N.D.		0.50	ppb(v)	2.5
07233	Methyl Acrylate	96-33-3	N.D.		0.50	ppb(v)	2.5
07234	Chloroform	67-66-3	2.0	J	0.50	ppb(v)	2.5
07235	1,1,1-Trichloroethane	71-55-6	320.		5.0	ppb(v)	25
07236	Carbon Tetrachloride	56-23-5	N.D.		0.50	ppb(v)	2.5
07237	1,2-Dichloroethane	107-06-2	N.D.		0.50	ppb(v)	2.5
07238	Benzene	71-43-2	0.60	J	0.50	ppb(v)	2.5
07239	Isooctane	540-84-1	0.50	J	0.50	ppb(v)	2.5

Lancaster Laboratories

2425 New Holland Pike, PO Box 12425, Lancaster, PA 17605-2425 • 717-656-2300 Fax: 717-656-2681 • www.lancasterlabs.com

Analysis Report

Lancaster Laboratories Sample No. AQ 4554263

South_Bank_G Tedlar Bag Grab Air Sample
Site Code: SC001 RFA #: ET05034
Dayton Thermal/Dayton, OH
Collected:06/29/2005 14:00 by BC

Account Number: 10160

Submitted: 06/30/2005 09:10
Reported: 07/12/2005 at 22:32
Discard: 09/11/2005

DaimlerChrysler Corporation
PO Box 537933
Livonia MI 48153-7933

SOUTG SDG#: DCU07-08

CAT No.	Analysis Name	CAS Number	As Received Result		As Received Method Detection Limit	Units	Dilution Factor
07240	Heptane	142-82-5	N.D.		0.50	ppb(v)	2.5
07241	Trichloroethene	79-01-6	460.		5.0	ppb(v)	25
07242	Ethyl Acrylate	140-88-5	N.D.		0.50	ppb(v)	2.5
07243	1,2-Dichloropropane	78-87-5	N.D.		0.50	ppb(v)	2.5
07244	Methyl Methacrylate	80-62-6	N.D.		0.50	ppb(v)	2.5
07245	Dibromomethane	74-95-3	N.D.		0.50	ppb(v)	2.5
07246	1,4-Dioxane	123-91-1	N.D.		0.50	ppb(v)	2.5
07247	Bromodichloromethane	75-27-4	N.D.		0.50	ppb(v)	2.5
07248	cis-1,3-Dichloropropene	10061-01-5	N.D.		0.50	ppb(v)	2.5
07249	4-Methyl-2-Pentanone	108-10-1	N.D.		1.0	ppb(v)	2.5
07250	Toluene	108-88-3	8.0		0.50	ppb(v)	2.5
07251	Octane	111-65-9	N.D.		0.50	ppb(v)	2.5
07252	trans-1,3-Dichloropropene	10061-02-6	N.D.		0.50	ppb(v)	2.5
07253	Ethyl Methacrylate	97-63-2	N.D.		0.50	ppb(v)	2.5
07254	1,1,2-Trichloroethane	79-00-5	N.D.		0.50	ppb(v)	2.5
07255	Tetrachloroethene	127-18-4	300.		5.0	ppb(v)	25
07256	2-Hexanone	591-78-6	N.D.		1.0	ppb(v)	2.5
07257	Dibromochloromethane	124-48-1	N.D.		0.50	ppb(v)	2.5
07258	1,2-Dibromoethane	106-93-4	N.D.		0.50	ppb(v)	2.5
07259	Chlorobenzene	108-90-7	N.D.		0.50	ppb(v)	2.5
07260	1,1,1,2-Tetrachloroethane	630-20-6	N.D.		0.50	ppb(v)	2.5
07261	Ethylbenzene	100-41-4	2.0	J	0.50	ppb(v)	2.5
07262	m/p-Xylene	1330-20-7	7.0		0.50	ppb(v)	2.5
07263	o-Xylene	95-47-6	3.0		0.50	ppb(v)	2.5
07264	Styrene	100-42-5	2.0	J	0.50	ppb(v)	2.5
07265	Bromoform	75-25-2	N.D.		0.50	ppb(v)	2.5
07266	Cumene	98-82-8	N.D.		0.50	ppb(v)	2.5
07267	1,1,2,2-Tetrachloroethane	79-34-5	N.D.		0.50	ppb(v)	2.5
07268	1,2,3-Trichloropropane	96-18-4	N.D.		0.50	ppb(v)	2.5
07269	Bromobenzene	108-86-1	N.D.		0.50	ppb(v)	2.5
07270	4-Ethyltoluene	622-96-8	4.0		0.50	ppb(v)	2.5
07271	1,3,5-Trimethylbenzene	108-67-8	2.0	J	0.50	ppb(v)	2.5
07272	Alpha Methyl Styrene	98-83-9	N.D.		0.50	ppb(v)	2.5
07273	1,2,4-Trimethylbenzene	95-63-6	4.0		0.50	ppb(v)	2.5
07274	1,3-Dichlorobenzene	541-73-1	N.D.		1.0	ppb(v)	2.5
07275	1,4-Dichlorobenzene	106-46-7	N.D.		1.0	ppb(v)	2.5
07277	1,2-Dichlorobenzene	95-50-1	N.D.		1.0	ppb(v)	2.5
07278	Hexachloroethane	67-72-1	N.D.		0.50	ppb(v)	2.5
07279	1,2,4-Trichlorobenzene	120-82-1	N.D.		3.0	ppb(v)	2.5
07280	Hexachlorobutadiene	87-68-3	N.D.		1.0	ppb(v)	2.5

The sample was collected in a Tedlar bag which is not the container referenced in the EPA method.

Lancaster Laboratories

2425 New Holland Pike, PO Box 12425, Lancaster, PA 17605-2425 • 717-656-2300 Fax: 717-656-2681 • www.lancasterlabs.com

Analysis Report

Lancaster Laboratories Sample No. AQ 4554263

South_Bank_G Tedlar Bag Grab Air Sample
Site Code: SC001 RFA #: ET05034
Dayton Thermal/Dayton, OH
Collected:06/29/2005 14:00 by BC

Account Number: 10160

Submitted: 06/30/2005 09:10
Reported: 07/12/2005 at 22:32
Discard: 09/11/2005

DaimlerChrysler Corporation
PO Box 537933
Livonia MI 48153-7933

SOUTG SDG#: DCU07-08

CAT No.	Analysis Name	CAS Number	As Received Result	As Received Method Detection Limit	Units	Dilution Factor

The reporting limits for the GC/MS volatile compounds were raised because sample dilution was necessary to bring target compounds into the calibration range of the system.

Laboratory Chronicle

CAT No.	Analysis Name	Method	Trial#	Analysis Date and Time	Analyst	Dilution Factor
07869	TO-14A VOA Ext. List Tedlar	EPA Method TO14A	1	07/08/2005 15:08	George M Main	25
07869	TO-14A VOA Ext. List Tedlar	EPA Method TO14A	1	07/08/2005 15:51	George M Main	2.5

Lancaster Laboratories

Analysis Report

2425 New Holland Pike, PO Box 12425, Lancaster, PA 17605-2425 • 717-656-2300 Fax: 717-656-2681 • www.lancasterlabs.com

Lancaster Laboratories Sample No. AQ 4554264

South_Bank_H Tedlar Bag Grab Air Sample
Site Code: SC001 RFA #: ET05034
Dayton Thermal/Dayton, OH
Collected:06/29/2005 14:15 by BC

Account Number: 10160

Submitted: 06/30/2005 09:10
Reported: 07/12/2005 at 22:32
Discard: 09/11/2005

DaimlerChrysler Corporation
PO Box 537933
Livonia MI 48153-7933

SOUTH SDG#: DCU07-09

CAT No.	Analysis Name	CAS Number	As Received Result		As Received Method Detection Limit	Units	Dilution Factor
07869	TO-14A VOA Ext. List Tedlar						
02076	tert-Butyl Alcohol	75-65-0	19.		0.50	ppb(v)	2.5
07201	Propene	115-07-1	N.D.		0.50	ppb(v)	2.5
07202	Dichlorodifluoromethane	75-71-8	1.0	J	0.50	ppb(v)	2.5
07203	Chlorodifluoromethane	75-45-6	N.D.		3.0	ppb(v)	2.5
07204	Freon 114	76-14-2	N.D.		0.50	ppb(v)	2.5
07205	Chloromethane	74-87-3	N.D.		0.50	ppb(v)	2.5
07206	Vinyl Chloride	75-01-4	N.D.		0.50	ppb(v)	2.5
07207	1,3-Butadiene	106-99-0	N.D.		3.0	ppb(v)	2.5
07208	Bromomethane	74-83-9	N.D.		0.50	ppb(v)	2.5
07209	Chloroethane	75-00-3	7.0		0.50	ppb(v)	2.5
07210	Dichlorofluoromethane	75-43-4	N.D.		0.50	ppb(v)	2.5
07212	Trichlorofluoromethane	75-69-4	3.0		0.50	ppb(v)	2.5
07213	Pentane	109-66-0	7.0		0.50	ppb(v)	2.5
07214	Acrolein	107-02-8	7.0		1.0	ppb(v)	2.5
07215	1,1-Dichloroethene	75-35-4	82.		0.50	ppb(v)	2.5
07216	Freon 113	76-13-1	5.0		1.0	ppb(v)	2.5
07217	Acetone	67-64-1	98.		3.0	ppb(v)	2.5
07218	Methyl Iodide	74-88-4	N.D.		0.50	ppb(v)	2.5
07219	Carbon Disulfide	75-15-0	40.		1.0	ppb(v)	2.5
07220	Acetonitrile	75-05-8	12.		1.0	ppb(v)	2.5
07221	3-Chloropropene	107-05-1	N.D.		1.0	ppb(v)	2.5
07222	Methylene Chloride	75-09-2	13.		1.0	ppb(v)	2.5
07223	Acrylonitrile	107-13-1	1.0	J	1.0	ppb(v)	2.5
07224	trans-1,2-Dichloroethene	156-60-5	4.0		0.50	ppb(v)	2.5
07225	Methyl t-Butyl Ether	1634-04-4	N.D.		0.50	ppb(v)	2.5
07226	Hexane	110-54-3	3.0		0.50	ppb(v)	2.5
07227	1,1-Dichloroethane	75-34-3	52.		0.50	ppb(v)	2.5
07228	Vinyl Acetate	108-05-4	1.0	J	0.50	ppb(v)	2.5
07230	cis-1,2-Dichloroethene	156-59-2	170.		0.50	ppb(v)	2.5
07231	2-Butanone	78-93-3	N.D.		1.0	ppb(v)	2.5
07232	Ethyl Acetate	141-78-6	N.D.		0.50	ppb(v)	2.5
07233	Methyl Acrylate	96-33-3	N.D.		0.50	ppb(v)	2.5
07234	Chloroform	67-66-3	2.0	J	0.50	ppb(v)	2.5
07235	1,1,1-Trichloroethane	71-55-6	230.		0.50	ppb(v)	2.5
07236	Carbon Tetrachloride	56-23-5	N.D.		0.50	ppb(v)	2.5
07237	1,2-Dichloroethane	107-06-2	N.D.		0.50	ppb(v)	2.5
07238	Benzene	71-43-2	1.0	J	0.50	ppb(v)	2.5
07239	Isooctane	540-84-1	N.D.		0.50	ppb(v)	2.5

Lancaster Laboratories

2425 New Holland Pike, PO Box 12425, Lancaster, PA 17605-2425 • 717-656-2300 Fax: 717-656-2681 • www.lancasterlabs.com

Analysis Report

Lancaster Laboratories Sample No. AQ 4554264

South_Bank_H Tedlar Bag Grab Air Sample
Site Code: SC001 RFA #: ET05034
Dayton Thermal/Dayton, OH
Collected:06/29/2005 14:15 by BC

Account Number: 10160

Submitted: 06/30/2005 09:10
Reported: 07/12/2005 at 22:32
Discard: 09/11/2005

DaimlerChrysler Corporation
PO Box 537933
Livonia MI 48153-7933

SOUTH SDG#: DCU07-09

CAT No.	Analysis Name	CAS Number	As Received Result		As Received Method Detection Limit	Units	Dilution Factor
07240	Heptane	142-82-5	0.80	J	0.50	ppb(v)	2.5
07241	Trichloroethene	79-01-6	380.		5.0	ppb(v)	25
07242	Ethyl Acrylate	140-88-5	N.D.		0.50	ppb(v)	2.5
07243	1,2-Dichloropropane	78-87-5	N.D.		0.50	ppb(v)	2.5
07244	Methyl Methacrylate	80-62-6	N.D.		0.50	ppb(v)	2.5
07245	Dibromomethane	74-95-3	N.D.		0.50	ppb(v)	2.5
07246	1,4-Dioxane	123-91-1	N.D.		0.50	ppb(v)	2.5
07247	Bromodichloromethane	75-27-4	N.D.		0.50	ppb(v)	2.5
07248	cis-1,3-Dichloropropene	10061-01-5	N.D.		0.50	ppb(v)	2.5
07249	4-Methyl-2-Pentanone	108-10-1	2.0	J	1.0	ppb(v)	2.5
07250	Toluene	108-88-3	7.0		0.50	ppb(v)	2.5
07251	Octane	111-65-9	1.0	J	0.50	ppb(v)	2.5
07252	trans-1,3-Dichloropropene	10061-02-6	N.D.		0.50	ppb(v)	2.5
07253	Ethyl Methacrylate	97-63-2	N.D.		0.50	ppb(v)	2.5
07254	1,1,2-Trichloroethane	79-00-5	0.80	J	0.50	ppb(v)	2.5
07255	Tetrachloroethene	127-18-4	150.		0.50	ppb(v)	2.5
07256	2-Hexanone	591-78-6	N.D.		1.0	ppb(v)	2.5
07257	Dibromochloromethane	124-48-1	N.D.		0.50	ppb(v)	2.5
07258	1,2-Dibromoethane	106-93-4	N.D.		0.50	ppb(v)	2.5
07259	Chlorobenzene	108-90-7	N.D.		0.50	ppb(v)	2.5
07260	1,1,1,2-Tetrachloroethane	630-20-6	N.D.		0.50	ppb(v)	2.5
07261	Ethylbenzene	100-41-4	2.0	J	0.50	ppb(v)	2.5
07262	m/p-Xylene	1330-20-7	6.0		0.50	ppb(v)	2.5
07263	o-Xylene	95-47-6	3.0		0.50	ppb(v)	2.5
07264	Styrene	100-42-5	2.0	J	0.50	ppb(v)	2.5
07265	Bromoform	75-25-2	N.D.		0.50	ppb(v)	2.5
07266	Cumene	98-82-8	1.0	J	0.50	ppb(v)	2.5
07267	1,1,2,2-Tetrachloroethane	79-34-5	N.D.		0.50	ppb(v)	2.5
07268	1,2,3-Trichloropropane	96-18-4	N.D.		0.50	ppb(v)	2.5
07269	Bromobenzene	108-86-1	N.D.		0.50	ppb(v)	2.5
07270	4-Ethyltoluene	622-96-8	N.D.		0.50	ppb(v)	2.5
07271	1,3,5-Trimethylbenzene	108-67-8	2.0	J	0.50	ppb(v)	2.5
07272	Alpha Methyl Styrene	98-83-9	N.D.		0.50	ppb(v)	2.5
07273	1,2,4-Trimethylbenzene	95-63-6	4.0		0.50	ppb(v)	2.5
07274	1,3-Dichlorobenzene	541-73-1	N.D.		1.0	ppb(v)	2.5
07275	1,4-Dichlorobenzene	106-46-7	N.D.		1.0	ppb(v)	2.5
07277	1,2-Dichlorobenzene	95-50-1	N.D.		1.0	ppb(v)	2.5
07278	Hexachloroethane	67-72-1	2.0	J	0.50	ppb(v)	2.5
07279	1,2,4-Trichlorobenzene	120-82-1	N.D.		3.0	ppb(v)	2.5
07280	Hexachlorobutadiene	87-68-3	N.D.		1.0	ppb(v)	2.5

The sample was collected in a Tedlar bag which is not the container referenced in the EPA method.

Lancaster Laboratories

Analysis Report

2425 New Holland Pike, PO Box 12425, Lancaster, PA 17605-2425 • 717-656-2300 Fax: 717-656-2681 • www.lancasterlabs.com

Lancaster Laboratories Sample No. AQ 4554264

South_Bank_H Tedlar Bag Grab Air Sample
Site Code: SC001 RFA #: ET05034
Dayton Thermal/Dayton, OH
Collected:06/29/2005 14:15 by BC

Account Number: 10160

Submitted: 06/30/2005 09:10
Reported: 07/12/2005 at 22:32
Discard: 09/11/2005

DaimlerChrysler Corporation
PO Box 537933
Livonia MI 48153-7933

SOUTH SDG#: DCU07-09

CAT No.	Analysis Name	CAS Number	As Received Result	As Received Method Detection Limit	Units	Dilution Factor

The reporting limits for the GC/MS volatile compounds were raised because sample dilution was necessary to bring target compounds into the calibration range of the system.

Laboratory Chronicle

CAT No.	Analysis Name	Method	Trial#	Analysis Date and Time	Analyst	Dilution Factor
07869	TO-14A VOA Ext. List Tedlar	EPA Method TO14A	1	07/08/2005 16:32	George M Main	25
07869	TO-14A VOA Ext. List Tedlar	EPA Method TO14A	1	07/08/2005 17:14	George M Main	2.5

Lancaster Laboratories

2425 New Holland Pike, PO Box 12425, Lancaster, PA 17605-2425 • 717-656-2300 Fax: 717-656-2681 • www.lancasterlabs.com

Analysis Report

Lancaster Laboratories Sample No. AQ 4554265

South_Bank_I Tedlar Bag Grab Air Sample
Site Code: SC001 RFA #: ET05034
Dayton Thermal/Dayton, OH
Collected:06/29/2005 14:30 by BC

Account Number: 10160

Submitted: 06/30/2005 09:10
Reported: 07/12/2005 at 22:32
Discard: 09/11/2005

DaimlerChrysler Corporation
PO Box 537933
Livonia MI 48153-7933

SOUTI SDG#: DCU07-10*

CAT No.	Analysis Name	CAS Number	As Received Result		As Received Method Detection Limit	Units	Dilution Factor
07869	TO-14A VOA Ext. List Tedlar						
02076	tert-Butyl Alcohol	75-65-0	N.D.		1.0	ppb(v)	5
07201	Propene	115-07-1	N.D.		1.0	ppb(v)	5
07202	Dichlorodifluoromethane	75-71-8	7.0		1.0	ppb(v)	5
07203	Chlorodifluoromethane	75-45-6	6.0		5.0	ppb(v)	5
07204	Freon 114	76-14-2	N.D.		1.0	ppb(v)	5
07205	Chloromethane	74-87-3	N.D.		1.0	ppb(v)	5
07206	Vinyl Chloride	75-01-4	3.0	J	1.0	ppb(v)	5
07207	1,3-Butadiene	106-99-0	N.D.		5.0	ppb(v)	5
07208	Bromomethane	74-83-9	N.D.		1.0	ppb(v)	5
07209	Chloroethane	75-00-3	12.		1.0	ppb(v)	5
07210	Dichlorofluoromethane	75-43-4	1.0	J	1.0	ppb(v)	5
07212	Trichlorofluoromethane	75-69-4	2.0	J	1.0	ppb(v)	5
07213	Pentane	109-66-0	16.		1.0	ppb(v)	5
07214	Acrolein	107-02-8	31.		3.0	ppb(v)	5
07215	1,1-Dichloroethene	75-35-4	42.		1.0	ppb(v)	5
07216	Freon 113	76-13-1	46.		3.0	ppb(v)	5
07217	Acetone	67-64-1	350.		5.0	ppb(v)	5
07218	Methyl Iodide	74-88-4	N.D.		1.0	ppb(v)	5
07219	Carbon Disulfide	75-15-0	240.		3.0	ppb(v)	5
07220	Acetonitrile	75-05-8	N.D.		3.0	ppb(v)	5
07221	3-Chloropropene	107-05-1	N.D.		3.0	ppb(v)	5
07222	Methylene Chloride	75-09-2	47.		3.0	ppb(v)	5
07223	Acrylonitrile	107-13-1	4.0	J	3.0	ppb(v)	5
07224	trans-1,2-Dichloroethene	156-60-5	15.		1.0	ppb(v)	5
07225	Methyl t-Butyl Ether	1634-04-4	N.D.		1.0	ppb(v)	5
07226	Hexane	110-54-3	22.		1.0	ppb(v)	5
07227	1,1-Dichloroethane	75-34-3	170.		1.0	ppb(v)	5
07228	Vinyl Acetate	108-05-4	N.D.		1.0	ppb(v)	5
07230	cis-1,2-Dichloroethene	156-59-2	400.		1.0	ppb(v)	5
07231	2-Butanone	78-93-3	16.		3.0	ppb(v)	5
07232	Ethyl Acetate	141-78-6	N.D.		1.0	ppb(v)	5
07233	Methyl Acrylate	96-33-3	N.D.		1.0	ppb(v)	5
07234	Chloroform	67-66-3	7.0		1.0	ppb(v)	5
07235	1,1,1-Trichloroethane	71-55-6	460.		1.0	ppb(v)	5
07236	Carbon Tetrachloride	56-23-5	N.D.		1.0	ppb(v)	5
07237	1,2-Dichloroethane	107-06-2	N.D.		1.0	ppb(v)	5
07238	Benzene	71-43-2	5.0		1.0	ppb(v)	5
07239	Isooctane	540-84-1	2.0	J	1.0	ppb(v)	5

Lancaster Laboratories

2425 New Holland Pike, PO Box 12425, Lancaster, PA 17605-2425 • 717-656-2300 Fax: 717-656-2681 • www.lancasterlabs.com

Analysis Report

Lancaster Laboratories Sample No. AQ 4554265

South_Bank_I Tedlar Bag Grab Air Sample
Site Code: SC001 RFA #: ET05034
Dayton Thermal/Dayton, OH
Collected:06/29/2005 14:30 by BC

Account Number: 10160

Submitted: 06/30/2005 09:10
Reported: 07/12/2005 at 22:32
Discard: 09/11/2005

DaimlerChrysler Corporation
PO Box 537933
Livonia MI 48153-7933

SOUTI SDG#: DCU07-10*

CAT No.	Analysis Name	CAS Number	As Received Result		As Received Method Detection Limit	Units	Dilution Factor
07240	Heptane	142-82-5	3.0	J	1.0	ppb(v)	5
07241	Trichloroethene	79-01-6	490.		5.0	ppb(v)	25
07242	Ethyl Acrylate	140-88-5	N.D.		1.0	ppb(v)	5
07243	1,2-Dichloropropane	78-87-5	N.D.		1.0	ppb(v)	5
07244	Methyl Methacrylate	80-62-6	N.D.		1.0	ppb(v)	5
07245	Dibromomethane	74-95-3	N.D.		1.0	ppb(v)	5
07246	1,4-Dioxane	123-91-1	N.D.		1.0	ppb(v)	5
07247	Bromodichloromethane	75-27-4	N.D.		1.0	ppb(v)	5
07248	cis-1,3-Dichloropropene	10061-01-5	N.D.		1.0	ppb(v)	5
07249	4-Methyl-2-Pentanone	108-10-1	N.D.		3.0	ppb(v)	5
07250	Toluene	108-88-3	31.		1.0	ppb(v)	5
07251	Octane	111-65-9	3.0	J	1.0	ppb(v)	5
07252	trans-1,3-Dichloropropene	10061-02-6	N.D.		1.0	ppb(v)	5
07253	Ethyl Methacrylate	97-63-2	N.D.		1.0	ppb(v)	5
07254	1,1,2-Trichloroethane	79-00-5	N.D.		1.0	ppb(v)	5
07255	Tetrachloroethene	127-18-4	430.		1.0	ppb(v)	5
07256	2-Hexanone	591-78-6	N.D.		3.0	ppb(v)	5
07257	Dibromochloromethane	124-48-1	N.D.		1.0	ppb(v)	5
07258	1,2-Dibromoethane	106-93-4	N.D.		1.0	ppb(v)	5
07259	Chlorobenzene	108-90-7	N.D.		1.0	ppb(v)	5
07260	1,1,1,2-Tetrachloroethane	630-20-6	N.D.		1.0	ppb(v)	5
07261	Ethylbenzene	100-41-4	8.0		1.0	ppb(v)	5
07262	m/p-Xylene	1330-20-7	23.		1.0	ppb(v)	5
07263	o-Xylene	95-47-6	7.0		1.0	ppb(v)	5
07264	Styrene	100-42-5	6.0		1.0	ppb(v)	5
07265	Bromoform	75-25-2	N.D.		1.0	ppb(v)	5
07266	Cumene	98-82-8	N.D.		1.0	ppb(v)	5
07267	1,1,2,2-Tetrachloroethane	79-34-5	N.D.		1.0	ppb(v)	5
07268	1,2,3-Trichloropropane	96-18-4	N.D.		1.0	ppb(v)	5
07269	Bromobenzene	108-86-1	N.D.		1.0	ppb(v)	5
07270	4-Ethyltoluene	622-96-8	9.0		1.0	ppb(v)	5
07271	1,3,5-Trimethylbenzene	108-67-8	4.0	J	1.0	ppb(v)	5
07272	Alpha Methyl Styrene	98-83-9	N.D.		1.0	ppb(v)	5
07273	1,2,4-Trimethylbenzene	95-63-6	11.		1.0	ppb(v)	5
07274	1,3-Dichlorobenzene	541-73-1	N.D.		3.0	ppb(v)	5
07275	1,4-Dichlorobenzene	106-46-7	N.D.		3.0	ppb(v)	5
07277	1,2-Dichlorobenzene	95-50-1	N.D.		3.0	ppb(v)	5
07278	Hexachloroethane	67-72-1	N.D.		1.0	ppb(v)	5
07279	1,2,4-Trichlorobenzene	120-82-1	N.D.		5.0	ppb(v)	5
07280	Hexachlorobutadiene	87-68-3	N.D.		3.0	ppb(v)	5

The sample was collected in a Tedlar bag which is not the container referenced in the EPA method.

Lancaster Laboratories

2425 New Holland Pike, PO Box 12425, Lancaster, PA 17605-2425 • 717-656-2300 Fax: 717-656-2681 • www.lancasterlabs.com

Analysis Report

Lancaster Laboratories Sample No. AQ 4554265

South_Bank_I Tedlar Bag Grab Air Sample
Site Code: SC001 RFA #: ET05034
Dayton Thermal/Dayton, OH
Collected:06/29/2005 14:30 by BC

Account Number: 10160

Submitted: 06/30/2005 09:10
Reported: 07/12/2005 at 22:32
Discard: 09/11/2005

DaimlerChrysler Corporation
PO Box 537933
Livonia MI 48153-7933

SOUTI SDG#: DCU07-10*

CAT No.	Analysis Name	CAS Number	As Received Result	As Received Method Detection Limit	Units	Dilution Factor

The reporting limits for the GC/MS volatile compounds were raised because sample dilution was necessary to bring target compounds into the calibration range of the system.

Laboratory Chronicle

CAT No.	Analysis Name	Method	Trial#	Analysis Date and Time	Analyst	Dilution Factor
07869	TO-14A VOA Ext. List Tedlar	EPA Method TO14A	1	07/11/2005 08:04	George M Main	25
07869	TO-14A VOA Ext. List Tedlar	EPA Method TO14A	1	07/11/2005 08:41	George M Main	5

Lancaster Laboratories

2425 New Holland Pike, PO Box 12425, Lancaster, PA 17605-2425 • 717-656-2300 Fax: 717-656-2681 • www.lancasterlabs.com

Analysis Report

Quality Control Summary

Client Name: DaimlerChrysler Corporation
Reported: 07/12/05 at 10:32 PM

Group Number: 949502

Matrix QC may not be reported if site-specific QC samples were not submitted. In these situations, to demonstrate precision and accuracy at a batch level, a LCS/LCSD was performed, unless otherwise specified in the method.

Laboratory Compliance Quality Control

Analysis Name	Blank Result	Blank MDL	Report Units	LCS %REC	LCSD %REC	LCS/LCSD Limits	RPD	RPD Max
Batch number: A0519130B	Sample number(s): 4554263-4554264							
tert-Butyl Alcohol	N.D.	0.20	ppb(v)					
Propene	N.D.	0.20	ppb(v)					
Dichlorodifluoromethane	N.D.	0.20	ppb(v)					
Chlorodifluoromethane	N.D.	1.0	ppb(v)					
Freon 114	N.D.	0.20	ppb(v)					
Chloromethane	N.D.	0.20	ppb(v)					
Vinyl Chloride	N.D.	0.20	ppb(v)	100		51-149		
1,3-Butadiene	N.D.	1.0	ppb(v)					
Bromomethane	N.D.	0.20	ppb(v)					
Chloroethane	N.D.	0.20	ppb(v)					
Dichlorofluoromethane	N.D.	0.20	ppb(v)					
Trichlorofluoromethane	N.D.	0.20	ppb(v)					
Pentane	N.D.	0.20	ppb(v)					
Acrolein	N.D.	0.50	ppb(v)					
1,1-Dichloroethene	N.D.	0.20	ppb(v)					
Freon 113	N.D.	0.50	ppb(v)					
Acetone	N.D.	1.0	ppb(v)					
Methyl Iodide	N.D.	0.20	ppb(v)					
Carbon Disulfide	N.D.	0.50	ppb(v)					
Acetonitrile	N.D.	0.50	ppb(v)					
3-Chloropropene	N.D.	0.50	ppb(v)					
Methylene Chloride	N.D.	0.50	ppb(v)					
Acrylonitrile	N.D.	0.50	ppb(v)					
trans-1,2-Dichloroethene	N.D.	0.20	ppb(v)					
Methyl t-Butyl Ether	N.D.	0.20	ppb(v)					
Hexane	N.D.	0.20	ppb(v)					
1,1-Dichloroethane	N.D.	0.20	ppb(v)					
Vinyl Acetate	N.D.	0.20	ppb(v)					
cis-1,2-Dichloroethene	N.D.	0.20	ppb(v)					
2-Butanone	N.D.	0.50	ppb(v)					
Ethyl Acetate	N.D.	0.20	ppb(v)					
Methyl Acrylate	N.D.	0.20	ppb(v)					
Chloroform	N.D.	0.20	ppb(v)					
1,1,1-Trichloroethane	N.D.	0.20	ppb(v)	100		73-170		
Carbon Tetrachloride	N.D.	0.20	ppb(v)					
1,2-Dichloroethane	N.D.	0.20	ppb(v)					
Benzene	N.D.	0.20	ppb(v)	140		70-154		
Isooctane	N.D.	0.20	ppb(v)					
Heptane	N.D.	0.20	ppb(v)					
Trichloroethene	N.D.	0.20	ppb(v)	122		62-150		
Ethyl Acrylate	N.D.	0.20	ppb(v)					
1,2-Dichloropropane	N.D.	0.20	ppb(v)					
Methyl Methacrylate	N.D.	0.20	ppb(v)					

*- Outside of specification
(1) The result for one or both determinations was less than five times the LOQ.
(2) The background result was more than four times the spike added.

Quality Control Summary

Client Name: DaimlerChrysler Corporation Group Number: 949502
Reported: 07/12/05 at 10:32 PM

Laboratory Compliance Quality Control

Analysis Name	Blank Result	Blank MDL	Report Units	LCS %REC	LCSD %REC	LCS/LCSD Limits	RPD	RPD Max
Dibromomethane	N.D.	0.20	ppb(v)					
1,4-Dioxane	N.D.	0.20	ppb(v)					
Bromodichloromethane	N.D.	0.20	ppb(v)					
cis-1,3-Dichloropropene	N.D.	0.20	ppb(v)					
4-Methyl-2-Pentanone	N.D.	0.50	ppb(v)					
Toluene	N.D.	0.20	ppb(v)					
Octane	N.D.	0.20	ppb(v)					
trans-1,3-Dichloropropene	N.D.	0.20	ppb(v)					
Ethyl Methacrylate	N.D.	0.20	ppb(v)					
1,1,2-Trichloroethane	N.D.	0.20	ppb(v)					
Tetrachloroethene	N.D.	0.20	ppb(v)					
2-Hexanone	N.D.	0.50	ppb(v)					
Dibromochloromethane	N.D.	0.20	ppb(v)					
1,2-Dibromoethane	N.D.	0.20	ppb(v)					
Chlorobenzene	N.D.	0.20	ppb(v)					
1,1,1,2-Tetrachloroethane	N.D.	0.20	ppb(v)					
Ethylbenzene	N.D.	0.20	ppb(v)	116		63-150		
m/p-Xylene	N.D.	0.20	ppb(v)					
o-Xylene	N.D.	0.20	ppb(v)					
Styrene	N.D.	0.20	ppb(v)					
Bromoform	N.D.	0.20	ppb(v)					
Cumene	N.D.	0.20	ppb(v)					
1,1,2,2-Tetrachloroethane	N.D.	0.20	ppb(v)					
1,2,3-Trichloropropane	N.D.	0.20	ppb(v)					
Bromobenzene	N.D.	0.20	ppb(v)					
4-Ethyltoluene	N.D.	0.20	ppb(v)					
1,3,5-Trimethylbenzene	N.D.	0.20	ppb(v)					
Alpha Methyl Styrene	N.D.	0.20	ppb(v)					
1,2,4-Trimethylbenzene	N.D.	0.20	ppb(v)					
1,3-Dichlorobenzene	N.D.	0.50	ppb(v)					
1,4-Dichlorobenzene	N.D.	0.50	ppb(v)	107		23-150		
1,2-Dichlorobenzene	N.D.	0.50	ppb(v)					
Hexachloroethane	N.D.	0.20	ppb(v)					
1,2,4-Trichlorobenzene	N.D.	1.0	ppb(v)					
Hexachlorobutadiene	N.D.	0.50	ppb(v)					
Batch number: C0519130A	Sample number(s): 4554256-4554259							
tert-Butyl Alcohol	N.D.	0.20	ppb(v)					
Propene	N.D.	0.20	ppb(v)					
Dichlorodifluoromethane	N.D.	0.20	ppb(v)					
Chlorodifluoromethane	N.D.	1.0	ppb(v)					
Freon 114	N.D.	0.20	ppb(v)					
Chloromethane	N.D.	0.20	ppb(v)					
Vinyl Chloride	N.D.	0.20	ppb(v)	120		51-149		
1,3-Butadiene	N.D.	1.0	ppb(v)					
Bromomethane	N.D.	0.20	ppb(v)					
Chloroethane	N.D.	0.20	ppb(v)					
Dichlorofluoromethane	N.D.	0.20	ppb(v)					
Trichlorofluoromethane	N.D.	0.20	ppb(v)					
Pentane	N.D.	0.20	ppb(v)					
Acrolein	N.D.	0.50	ppb(v)					
1,1-Dichloroethene	N.D.	0.20	ppb(v)					
Freon 113	N.D.	0.50	ppb(v)					
Acetone	N.D.	1.0	ppb(v)					
Methyl Iodide	N.D.	0.20	ppb(v)					

*- Outside of specification
(1) The result for one or both determinations was less than five times the LOQ.
(2) The background result was more than four times the spike added.

Lancaster Laboratories

2425 New Holland Pike, PO Box 12425, Lancaster, PA 17605-2425 • 717-656-2300 Fax: 717-656-2681 • www.lancasterlabs.com

Analysis Report

Quality Control Summary

Client Name: DaimlerChrysler Corporation
Reported: 07/12/05 at 10:32 PM

Group Number: 949502

Laboratory Compliance Quality Control

Analysis Name	Blank Result	Blank MDL	Report Units	LCS %REC	LCSD %REC	LCS/LCSD Limits	RPD	RPD Max
Carbon Disulfide	N.D.	0.50	ppb(v)					
Acetonitrile	N.D.	0.50	ppb(v)					
3-Chloropropene	N.D.	0.50	ppb(v)					
Methylene Chloride	N.D.	0.50	ppb(v)					
Acrylonitrile	N.D.	0.50	ppb(v)					
trans-1,2-Dichloroethene	N.D.	0.20	ppb(v)					
Methyl t-Butyl Ether	N.D.	0.20	ppb(v)					
Hexane	N.D.	0.20	ppb(v)					
1,1-Dichloroethane	N.D.	0.20	ppb(v)					
Vinyl Acetate	N.D.	0.20	ppb(v)					
cis-1,2-Dichloroethene	N.D.	0.20	ppb(v)					
2-Butanone	N.D.	0.50	ppb(v)					
Ethyl Acetate	N.D.	0.20	ppb(v)					
Methyl Acrylate	N.D.	0.20	ppb(v)					
Chloroform	N.D.	0.20	ppb(v)					
1,1,1-Trichloroethane	N.D.	0.20	ppb(v)	109		73-170		
Carbon Tetrachloride	N.D.	0.20	ppb(v)					
1,2-Dichloroethane	N.D.	0.20	ppb(v)					
Benzene	N.D.	0.20	ppb(v)	106		70-154		
Isooctane	N.D.	0.20	ppb(v)					
Heptane	N.D.	0.20	ppb(v)					
Trichloroethene	N.D.	0.20	ppb(v)	109		62-150		
Ethyl Acrylate	N.D.	0.20	ppb(v)					
1,2-Dichloropropane	N.D.	0.20	ppb(v)					
Methyl Methacrylate	N.D.	0.20	ppb(v)					
Dibromomethane	N.D.	0.20	ppb(v)					
1,4-Dioxane	N.D.	0.20	ppb(v)					
Bromodichloromethane	N.D.	0.20	ppb(v)					
cis-1,3-Dichloropropene	N.D.	0.20	ppb(v)					
4-Methyl-2-Pentanone	N.D.	0.50	ppb(v)					
Toluene	N.D.	0.20	ppb(v)					
Octane	N.D.	0.20	ppb(v)					
trans-1,3-Dichloropropene	N.D.	0.20	ppb(v)					
Ethyl Methacrylate	N.D.	0.20	ppb(v)					
1,1,2-Trichloroethane	N.D.	0.20	ppb(v)					
Tetrachloroethene	N.D.	0.20	ppb(v)					
2-Hexanone	N.D.	0.50	ppb(v)					
Dibromochloromethane	N.D.	0.20	ppb(v)					
1,2-Dibromoethane	N.D.	0.20	ppb(v)					
Chlorobenzene	N.D.	0.20	ppb(v)					
1,1,1,2-Tetrachloroethane	N.D.	0.20	ppb(v)					
Ethylbenzene	N.D.	0.20	ppb(v)	95		63-150		
m/p-Xylene	N.D.	0.20	ppb(v)					
o-Xylene	N.D.	0.20	ppb(v)					
Styrene	N.D.	0.20	ppb(v)					
Bromoform	N.D.	0.20	ppb(v)					
Cumene	N.D.	0.20	ppb(v)					
1,1,2,2-Tetrachloroethane	N.D.	0.20	ppb(v)					
1,2,3-Trichloropropane	N.D.	0.20	ppb(v)					
Bromobenzene	N.D.	0.20	ppb(v)					
4-Ethyltoluene	N.D.	0.20	ppb(v)					
1,3,5-Trimethylbenzene	N.D.	0.20	ppb(v)					
Alpha Methyl Styrene	N.D.	0.20	ppb(v)					
1,2,4-Trimethylbenzene	N.D.	0.20	ppb(v)					
1,3-Dichlorobenzene	N.D.	0.50	ppb(v)					

*- Outside of specification

(1) The result for one or both determinations was less than five times the LOQ.

(2) The background result was more than four times the spike added.

Quality Control Summary

Client Name: DaimlerChrysler Corporation
Reported: 07/12/05 at 10:32 PM

Group Number: 949502

Laboratory Compliance Quality Control

Analysis Name	Blank Result	Blank MDL	Report Units	LCS %REC	LCSD %REC	LCS/LCSD Limits	RPD	RPD Max
1,4-Dichlorobenzene	N.D.	0.50	ppb(v)	83		23-150		
1,2-Dichlorobenzene	N.D.	0.50	ppb(v)					
Hexachloroethane	N.D.	0.20	ppb(v)					
1,2,4-Trichlorobenzene	N.D.	1.0	ppb(v)					
Hexachlorobutadiene	N.D.	0.50	ppb(v)					
Batch number: C0519130B	Sample number(s): 4554260-4554262,4554265							
tert-Butyl Alcohol	N.D.	0.20	ppb(v)					
Propene	N.D.	0.20	ppb(v)					
Dichlorodifluoromethane	N.D.	0.20	ppb(v)					
Chlorodifluoromethane	N.D.	1.0	ppb(v)					
Freon 114	N.D.	0.20	ppb(v)					
Chloromethane	N.D.	0.20	ppb(v)					
Vinyl Chloride	N.D.	0.20	ppb(v)	120		51-149		
1,3-Butadiene	N.D.	1.0	ppb(v)					
Bromomethane	N.D.	0.20	ppb(v)					
Chloroethane	N.D.	0.20	ppb(v)					
Dichlorofluoromethane	N.D.	0.20	ppb(v)					
Trichlorofluoromethane	N.D.	0.20	ppb(v)					
Pentane	N.D.	0.20	ppb(v)					
Acrolein	N.D.	0.50	ppb(v)					
1,1-Dichloroethene	N.D.	0.20	ppb(v)					
Freon 113	N.D.	0.50	ppb(v)					
Acetone	N.D.	1.0	ppb(v)					
Methyl Iodide	N.D.	0.20	ppb(v)					
Carbon Disulfide	N.D.	0.50	ppb(v)					
Acetonitrile	N.D.	0.50	ppb(v)					
3-Chloropropene	N.D.	0.50	ppb(v)					
Methylene Chloride	N.D.	0.50	ppb(v)					
Acrylonitrile	N.D.	0.50	ppb(v)					
trans-1,2-Dichloroethene	N.D.	0.20	ppb(v)					
Methyl t-Butyl Ether	N.D.	0.20	ppb(v)					
Hexane	N.D.	0.20	ppb(v)					
1,1-Dichloroethane	N.D.	0.20	ppb(v)					
Vinyl Acetate	N.D.	0.20	ppb(v)					
cis-1,2-Dichloroethene	N.D.	0.20	ppb(v)					
2-Butanone	N.D.	0.50	ppb(v)					
Ethyl Acetate	N.D.	0.20	ppb(v)					
Methyl Acrylate	N.D.	0.20	ppb(v)					
Chloroform	N.D.	0.20	ppb(v)					
1,1,1-Trichloroethane	N.D.	0.20	ppb(v)	109		73-170		
Carbon Tetrachloride	N.D.	0.20	ppb(v)					
1,2-Dichloroethane	N.D.	0.20	ppb(v)					
Benzene	N.D.	0.20	ppb(v)	106		70-154		
Isooctane	N.D.	0.20	ppb(v)					
Heptane	N.D.	0.20	ppb(v)					
Trichloroethene	N.D.	0.20	ppb(v)	109		62-150		
Ethyl Acrylate	N.D.	0.20	ppb(v)					
1,2-Dichloropropane	N.D.	0.20	ppb(v)					
Methyl Methacrylate	N.D.	0.20	ppb(v)					
Dibromomethane	N.D.	0.20	ppb(v)					
1,4-Dioxane	N.D.	0.20	ppb(v)					
Bromodichloromethane	N.D.	0.20	ppb(v)					
cis-1,3-Dichloropropene	N.D.	0.20	ppb(v)					
4-Methyl-2-Pentanone	N.D.	0.50	ppb(v)					

*- Outside of specification
(1) The result for one or both determinations was less than five times the LOQ.
(2) The background result was more than four times the spike added.

Lancaster Laboratories

2425 New Holland Pike, PO Box 12425, Lancaster, PA 17605-2425 • 717-656-2300 Fax: 717-656-2681 • www.lancasterlabs.com

Analysis Report

Quality Control Summary

Client Name: DaimlerChrysler Corporation
Reported: 07/12/05 at 10:32 PM

Group Number: 949502

Laboratory Compliance Quality Control

Analysis Name	Blank Result	Blank MDL	Report Units	LCS %REC	LCSD %REC	LCS/LCSD Limits	RPD	RPD Max
Toluene	N.D.	0.20	ppb(v)					
Octane	N.D.	0.20	ppb(v)					
trans-1,3-Dichloropropene	N.D.	0.20	ppb(v)					
Ethyl Methacrylate	N.D.	0.20	ppb(v)					
1,1,2-Trichloroethane	N.D.	0.20	ppb(v)					
Tetrachloroethene	N.D.	0.20	ppb(v)					
2-Hexanone	N.D.	0.50	ppb(v)					
Dibromochloromethane	N.D.	0.20	ppb(v)					
1,2-Dibromoethane	N.D.	0.20	ppb(v)					
Chlorobenzene	N.D.	0.20	ppb(v)					
1,1,1,2-Tetrachloroethane	N.D.	0.20	ppb(v)					
Ethylbenzene	N.D.	0.20	ppb(v)	95		63-150		
m/p-Xylene	N.D.	0.20	ppb(v)					
o-Xylene	N.D.	0.20	ppb(v)					
Styrene	N.D.	0.20	ppb(v)					
Bromoform	N.D.	0.20	ppb(v)					
Cumene	N.D.	0.20	ppb(v)					
1,1,2,2-Tetrachloroethane	N.D.	0.20	ppb(v)					
1,2,3-Trichloropropane	N.D.	0.20	ppb(v)					
Bromobenzene	N.D.	0.20	ppb(v)					
4-Ethyltoluene	N.D.	0.20	ppb(v)					
1,3,5-Trimethylbenzene	N.D.	0.20	ppb(v)					
Alpha Methyl Styrene	N.D.	0.20	ppb(v)					
1,2,4-Trimethylbenzene	N.D.	0.20	ppb(v)					
1,3-Dichlorobenzene	N.D.	0.50	ppb(v)					
1,4-Dichlorobenzene	N.D.	0.50	ppb(v)	83		23-150		
1,2-Dichlorobenzene	N.D.	0.50	ppb(v)					
Hexachloroethane	N.D.	0.20	ppb(v)					
1,2,4-Trichlorobenzene	N.D.	1.0	ppb(v)					
Hexachlorobutadiene	N.D.	0.50	ppb(v)					

*- Outside of specification
(1) The result for one or both determinations was less than five times the LOQ.
(2) The background result was more than four times the spike added.

DAIMLERCHRYSLER — Chain-of-Custody

3340 B

Lancaster Laboratories 2425 New Holland Pike Lancaster, PA 17601 Phone Number: (717) 656-2300 Fax Number: (717) 656-2681	Project Name: Dayton Thermal Behr Site Location: Dayton Ohio Site Code: RFA Number: ET050334 KAU/BBS, 7/1/05 DaimlerChrysler PM: Gary Stanzek	Consultant: Earth Tech Address: 4135 Technology Pkwy. Sheboygan, WI 53083 Consultant PM: Rob Stenson Phone: 920-458-8711 Fax: 920-458-0550

Turn-around Time Request: (circle)
24 calendar hrs.
48 calendar hrs.
7 calendar days
14 calendar days

Data Package Deliverables: (circle)
DaimlerChrysler Level 1
DaimlerChrysler Level 2
CLP

Compound List-Parameter/Method/Bottle Type/Preservative

Matrix Codes
S - Soil, SW - Surface Water, GW - Groundwater, A - Air, Sed. - Sediment, O - Other (specify)

Are aqueous samples field filtered for metals? Yes No

Field Sample Identification	Date Collected	Time Collected	Grab (G) or Composite (C)	Matrix Code	Total # of Containers	Tedlar									Remarks
North Bank 2	6/29/05	1:04pm	G	A	1	1									
North Bank 3	6/29/05	12:19pm	G	A	1	1									
North Bank 4	6/29/05	12:35pm	G	A	1	1									
North Bank 6	6/29/05	12:40pm	G	A	1	1									
South Bank C	6/29/05	1:15pm	G	A	1	1									
~~South Bank D~~	~~6/29/05~~		~~G~~	~~A~~	~~1~~	~~1~~									
South Bank E	6/29/05	1:30pm	G	A	1	1									
South Bank F	6/29/05	1:45pm	G	A	1	1									
South Bank G	6/29/05	2:00pm	G	A	1	1									
South Bank H	6/29/05	2:15pm	G	A	1	1									

Sampler(s): Brian Cheshire, Brian Cassel

Cooler ID # N/A

Samples Relinquished under Airbill No. 8528 1924 8959

Temperature (corrected) N/A

Relinquished by:	Date:	Time:	Received by:	Date:	Time:	Custody Seal Intact?
Brian A Cheshire	6/29/05	2:30pm				Yes No
Relinquished by:	Date:	Time:	Received for Laboratory by:	Date:	Time:	Custody Seal Intact?
			Kathy Birkey	6-30-05	0910	Yes No

Is RFA sampling complete? Yes No

DaimlerChrysler Corporation 800 Chrysler Drive, CIMS 482-00-51, Auburn Hills, Michigan 48326-2757

Distribution: White copy: Data package Yellow: Retained by laboratory Pink: Retained by sampler

DAIMLERCHRYSLER — Chain-of-Custody

3337 B

Lancaster Laboratories 2425 New Holland Pike Lancaster, PA 17601 Phone Number: (717) 656-2300 Fax Number: (717) 656-2681	Project Name: Dayton Thermal Behr Site Location: Dayton OHIO Site Code: RFA Number: ET050384 VAN/895,7/1105 DaimlerChrysler PM: Gary Stanzek	Consultant: Earth Tech Address: 4135 Technology Pkwy Sheboygan WI 53083 Consultant PM: Rob Stenson Phone: 920-458-8711 Fax: 920-458-0550

Turn-around Time Request: (circle)
- 24 calendar hrs.
- 48 calendar hrs.
- 7 calendar days
- 14 calendar days

Data Package Deliverables: (circle)
- DaimlerChrysler Level 1
- DaimlerChrysler Level 2
- CLP

Compound List-Parameter/Method/Bottle Type/Preservative: Tedlar

Matrix Codes: S - Soil; SW - Surface Water; GW - Groundwater; A - Air; Sed. - Sediment; O - Other (specify)

Are aqueous samples field filtered for metals? Yes No

Field Sample Identification	Date Collected	Time Collected	Grab (G) or Composite (C)	Matrix Code	Total # of Containers	Tedlar									Remarks
South Park F	6/29/05	2:30pm	G	A	1	1									
~~South Park B~~	~~6/29/05~~	~~2:45pm~~	~~G~~	~~A~~	~~1~~	~~1~~									

Sampler(s): Brian Cheshire, Brian Cassel	Cooler ID # N/A			Samples Relinquished under Airbill No. 8528 1924 8959		Temperature (corrected) N/A
	Relinquished by: [signature]	Date: 6/29/05	Time: 2:50PM	Received by:	Date:	Time:	Custody Seal Intact? Yes No
Is RFA sampling complete? Yes No	Relinquished by:	Date:	Time:	Received for Laboratory by: Kathy Binkley	Date: 6-30-05	Time: 0910	Custody Seal Intact? Yes No

DaimlerChrysler Corporation 800 Chrysler Drive, CIMS 482-00-51, Auburn Hills, Michigan 48326-2757

Distribution: White copy: Data package Yellow : Retained by laboratory Pink: Retained by sampler

Revision No. 3
Created: July 9, 1999

Lancaster Laboratories
2425 New Holland Pike • Lancaster, PA 17601

Environmental Sample Administration Receipt Documentation Log

(Daimler Chrysler)

Client/Project: Earth Tech (PA)

Date of Receipt: 6-30-05

Time of Receipt: 0910

Source Code: 50-1

Shipping Container Sealed: (Y) / N

Custody Seal Present: (Y) / N

Custody Seal Intact: (Y) / N / NA

Package: ~~Chilled~~ / (Not Chilled)

KB 6-30-05

Unpacker Emp. No.: 1255

Temperature of Shipping Containers	
#1	#2
Thermometer ID:	Thermometer ID:
Temp.:	Temp.:
Temp. Bottle / Surface Temp.	Temp. Bottle / Surface Temp.
Wet Ice / Dry Ice / Ice Packs	Wet Ice / Dry Ice / Ice Packs
Ice Present? Y / N Loose / Bagged	Ice Present? Y / N Loose / Bagged
#3	#4
Thermometer ID:	Thermometer ID:
Temp.:	Temp.:
Temp. Bottle / Surface Temp.	Temp. Bottle / Surface Temp.
Wet Ice / Dry Ice / Ice Packs	Wet Ice / Dry Ice / Ice Packs
Ice Present? Y / N Loose / Bagged	Ice Present? Y / N Loose / Bagged

~~Paperwork Discrepancy/Unpacking Problems:~~

Rec'd 10 tedlar bag air samples.

Sample Administration Internal Chain of Custody			
Name	Date	Time	Reason for Transfer
Kathy Binkley	6-30-05	1405	Unpacking
Tanny Bentz	6/30/05	1438	Place in Storage or (Entry)
			Remove from Storage
			Place in Storage or Entry
			Entry

Lancaster Laboratories
2425 New Holland Pike • Lancaster, PA 17601

Explanation of Symbols and Abbreviations

The following defines common symbols and abbreviations used in reporting technical data:

N.D.	none detected	**BMQL**	Below Minimum Quantitation Level
TNTC	Too Numerous To Count	**MPN**	Most Probable Number
IU	International Units	**CP Units**	cobalt-chloroplatinate units
umhos/cm	micromhos/cm	**NTU**	nephelometric turbidity units
C	degrees Celsius	**F**	degrees Fahrenheit
meq	milliequivalents	**lb.**	pound(s)
g	gram(s)	**kg**	kilogram(s)
ug	microgram(s)	**mg**	milligram(s)
ml	milliliter(s)	**l**	liter(s)
m3	cubic meter(s)	**ul**	microliter(s)

< less than - The number following the sign is the limit of quantitation, the smallest amount of analyte which can be reliably determined using this specific test.

> greater than

J estimated value – The result is ≥ the Method Detection Limit (MDL) and < the Limit of Quantitation (LOQ).

ppm parts per million - One ppm is equivalent to one milligram per kilogram (mg/kg), or one gram per million grams. For aqueous liquids, ppm is usually taken to be equivalent to milligrams per liter (mg/l), because one liter of water has a weight very close to a kilogram. For gases or vapors, one ppm is equivalent to one microliter of gas per liter of gas.

ppb parts per billion

Dry weight basis Results printed under this heading have been adjusted for moisture content. This increases the analyte weight concentration to approximate the value present in a similar sample without moisture. All other results are reported on an as-received basis.

U.S. EPA CLP Data Qualifiers:

Organic Qualifiers

A	TIC is a possible aldol-condensation product
B	Analyte was also detected in the blank
C	Pesticide result confirmed by GC/MS
D	Compound quantitated on a diluted sample
E	Concentration exceeds the calibration range of the instrument
N	Presumptive evidence of a compound (TICs only)
P	Concentration difference between primary and confirmation columns >25%
U	Compound was not detected
X,Y,Z	Defined in case narrative

Inorganic Qualifiers

B	Value is <CRDL, but ≥IDL
E	Estimated due to interference
M	Duplicate injection precision not met
N	Spike sample not within control limits
S	Method of standard additions (MSA) used for calculation
U	Compound was not detected
W	Post digestion spike out of control limits
*****	Duplicate analysis not within control limits
+	Correlation coefficient for MSA <0.995

Analytical test results for methods listed on the laboratories' accreditation scope meet all requirements of NELAC unless otherwise noted under the individual analysis.

Measurement uncertainty values, as applicable, are available upon request.

Tests results relate only to the sample tested. Clients should be aware that a critical step in a chemical or microbiological analysis is the collection of the sample. Unless the sample analyzed is truly representative of the bulk of material involved, the test results will be meaningless. If you have questions regarding the proper techniques of collecting samples, please contact us. We cannot be held responsible for sample integrity, however, unless sampling has been performed by a member of our staff. This report shall not be reproduced except in full, without the written approval of the laboratory.

WARRANTY AND LIMITS OF LIABILITY - In accepting analytical work, we warrant the accuracy of test results for the sample as submitted. THE FOREGOING EXPRESS WARRANTY IS EXCLUSIVE AND IS GIVEN IN LIEU OF ALL OTHER WARRANTIES, EXPRESSED OR IMPLIED. WE DISCLAIM ANY OTHER WARRANTIES, EXPRESSED OR IMPLIED, INCLUDING A WARRANTY OF FITNESS FOR PARTICULAR PURPOSE AND WARRANTY OF MERCHANTABILITY. IN NO EVENT SHALL LANCASTER LABORATORIES BE LIABLE FOR INDIRECT, SPECIAL, CONSEQUENTIAL, OR INCIDENTAL DAMAGES INCLUDING, BUT NOT LIMITED TO, DAMAGES FOR LOSS OF PROFIT OR GOODWILL REGARDLESS OF (A) THE NEGLIGENCE (EITHER SOLE OR CONCURRENT) OF LANCASTER LABORATORIES AND (B) WHETHER LANCASTER LABORATORIES HAS BEEN INFORMED OF THE POSSIBILITY OF SUCH DAMAGES. We accept no legal responsibility for the purposes for which the client uses the test results. No purchase order or other order for work shall be accepted by Lancaster Laboratories which includes any conditions that vary from the Standard Terms and Conditions of Lancaster Laboratories and we hereby object to any conflicting terms contained in any acceptance or order submitted by client.

DAIMLERCHRYSLER 10160/890889/4248778-91 Chain-of-Custody

3661 B

Lancaster Laboratories	Project Name: DCX-DAYTON THERMAL/BEHR	Consultant: EARTH TECH
2425 New Holland Pike	Site Location: DAYTON, OHIO	Address: 4135 TECHNOLOGY PARKWAY
Lancaster, PA 17601	Site Code:	SHEBOYGAN, WI 53083
Phone Number: (717) 656-2300	RFA Number: ETO 4018	Consultant PM ROB STENSON
Fax Number: (717) 656-2681	DaimlerChrysler PM: GARY STANCZUK	Phone: 920-458-8711 Fax: 920-458-0550

Turn-around Time Request: (circle)
24 calendar hrs.
48 calendar hrs.
7 calendar days
14 calendar days

Data Package Deliverables: (circle)
DaimlerChrysler Level 1
DaimlerChrysler Level 2
CLP

Compound List-Parameter/Method/Bottle Type/Preservative: 9341 TEDLAR

Matrix Codes
S - Soil, SW - Surface Water, GW - Groundwater, A - Air, Sed. - Sediment, O - Other (specify)

Are aqueous samples field filtered for metals? Yes No

Field Sample Identification	Date Collected	Time Collected	Grab (G) or Composite (C)	Matrix Code	Total # of Containers	9341 TEDLAR									Remarks
BANK G TOTAL-033004	03/30/04	908	G	A	1	X									
BANK F TOTAL-033004	03/30/04	1125	G	A	1	X									
BANK E TOTAL-033004	03/30/04	1350	G	A	1	X									
BANK D TOTAL-033004	03/30/04	1508	G	A	1	X									
BANK B TOTAL-033004	03/30/04	1645	G	A	1	X									
BANK A TOTAL-033004	03/30/04	1749	G	A	1	X									
BANK I TOTAL-033104	03/31/04	942	G	A	1	X									
BANK 4 TOTAL-033104	03/31/04	1202	G	A	1	X									
BANK 6 TOTAL-033104	03/31/04	1514	G	A	1	X									
BANK 5 TOTAL-033104	03/31/04	1652	G	A	1	X									

Sampler(s): STEVE CERVI	Cooler ID #		Samples Relinquished under Airbill No 841756803052			Temperature (corrected) N/A C
	Relinquished by: C. Carlson	Date: 3/26/04	Time: 1537	Received by:	Date:	Time:	Custody Seal Intact? Yes No
Is RFA sampling complete? Yes No	Relinquished by: STEVE CERVI	Date: 4/2/04	Time: 1330	Received for Laboratory by: [illegible]	Date: 4/5/04	Time: 0915	Custody Seal Intact? Yes No

DaimlerChrysler Corporation 800 Chrysler Drive, CIMS 482-00-51, Auburn Hills, Michigan 48326-2757

Distribution: White copy: Data package Yellow : Retained by laboratory Pink: Retained by sampler

Revision No. 3
Created: July 9, 1999

DAIMLERCHRYSLER 10160/890889/4248778-91 Chain-of-Custody 3660 B

Lancaster Laboratories 2425 New Holland Pike Lancaster, PA 17601 Phone Number: (717) 656-2300 Fax Number: (717) 656-2681	Project Name: DCX-DAYTON THERMAL/BEHR Site Location: DAYTON, OHIO Site Code: RFA Number: ET04018 DaimlerChrysler PM: GARY STANCZUK	Consultant: EARTH TECH Address: 4135 TECHNOLOGY PARKWAY SHEBOYGAN, WI 53083 Consultant PM ROB STENSON Phone: 920-458-8711 Fax: 920-458-0550

Turn-around Time Request: (circle)
24 calendar hrs.
48 calendar hrs.
7 calendar days
14 calendar days

Data Package Deliverables: (circle)
DaimlerChrysler Level 1
DaimlerChrysler Level 2
CLP

Compound List-Parameter/Method/Bottle Type/Preservative: 9341 TEDLAR

Matrix Codes
S - Soil SW - Surface Water
GW - Groundwater A - Air
Sed. - Sediment
O - Other (specify)

Are aqueous samples field filtered for metals? Yes No

Field Sample Identification	Date Collected	Time Collected	Grab (G) or Composite (C)	Matrix Code	Total # of Containers	9341 TEDLAR								Remarks
BANK C TOTAL-040104	04/01/04	936	G	A	1	X								
BANK 1 TOTAL-040104	04/01/04	1125	G	A	1	X								
BANK 2 TOTAL-040104	04/01/04	1522	G	A	1	X								
BANK 3 TOTAL-040104	04/01/04	1706	G	A	1	X								

Sampler(s) STEVE CERVI	Cooler ID #			Samples Relinquished under Airbill No. 847568030846			Temperature (corrected) ___ C
	Relinquished by: STEVE CERVI	Date: 4/2/04	Time: 1330	Received by:	Date:	Time:	Custody Seal Intact? Yes No
Is RFA sampling complete? Yes No	Relinquished by:	Date:	Time:	Received for Laboratory by:	Date: 4/5/04	Time: 0915	Custody Seal Intact? Yes No

DaimlerChrysler Corporation 800 Chrysler Drive, CIMS 482-00-51, Auburn Hills, Michigan 48326-2757

Distribution: White copy: Data package Yellow : Retained by laboratory Pink: Retained by sampler

Revision No. 3
Created: July 9, 1999

Analysis Report

Lancaster Laboratories

ANALYTICAL RESULTS

Prepared for:

DaimlerChrysler Corporation
PO Box 537933
Livonia MI 48153-7933

248-576-5741

Prepared by:

Lancaster Laboratories
2425 New Holland Pike
Lancaster, PA 17605-2425

SAMPLE GROUP

The sample group for this submittal is 890889. Samples arrived at the laboratory on Monday, April 05, 2004. The PO# for this group is N99C403749-B.

Client Description	Lancaster Labs Number
BANK_G_TOTAL-033004 Tedlar Bag Grab Air Sample	4248778
BANK_F_TOTAL-033004 Tedlar Bag Grab Air Sample	4248779
BANK_E_TOTAL-033004 Tedlar Bag Grab Air Sample	4248780
BANK_D_TOTAL-033004 Tedlar Bag Grab Air Sample	4248781
BANK_B_TOTAL-033004 Tedlar Bag Grab Air Sample	4248782
BANK_A_TOTAL-033004 Tedlar Bag Grab Air Sample	4248783
BANK_I_TOTAL-033104 Tedlar Bag Grab Air Sample	4248784
BANK_4_TOTAL-033104 Tedlar Bag Grab Air Sample	4248785
BANK_6_TOTAL-033104 Tedlar Bag Grab Air Sample	4248786
BANK_5_TOTAL-033104 Tedlar Bag Grab Air Sample	4248787
BANK_C_TOTAL-040104 Tedlar Bag Grab Air Sample	4248788
BANK_1_TOTAL-040104 Tedlar Bag Grab Air Sample	4248789
BANK_2_TOTAL-040104 Tedlar Bag Grab Air Sample	4248790
BANK_3_TOTAL-040104 Tedlar Bag Grab Air Sample	4248791

ELECTRONIC COPY TO	Earth Tech	Attn: Ms. Lisa Smith
1 COPY TO	Earth Tech	Attn: Mr. Rob Stenson
ELECTRONIC COPY TO	LLI	Attn: Ms. Kathy Klinefelter

Lancaster Laboratories

Questions? Contact your Client Services Representative
Katherine A Klinefelter at (717) 656-2300.

Respectfully Submitted,

Lawrence M. Taylor
Sr. Chemist

Lancaster Laboratories, Inc.
2425 New Holland Pike
PO Box 12425
Lancaster, PA 17605-2425
717-656-2300 Fax: 717-656-2681

MEMBER ACIL

Analysis Report

Lancaster Laboratories

Lancaster Laboratories Sample No. AQ 4248778

BANK_G_TOTAL-033004 Tedlar Bag Grab Air Sample
Site Code: SC001 RFA #: ET04018
Dayton Thermal/Dayton, OH
Collected:03/30/2004 09:08 by SC

Account Number: 10160

Submitted: 04/05/2004 09:15
Reported: 04/28/2004 at 10:04
Discard: 06/28/2004

DaimlerChrysler Corporation
PO Box 537933
Livonia MI 48153-7933

BANKG SDG#: DCP54-01

CAT No.	Analysis Name	CAS Number	As Received Result	As Received Method Detection Limit	Units	Dilution Factor

Laboratory Chronicle

CAT No.	Analysis Name	Method	Trial#	Analysis Date and Time	Analyst	Dilution Factor
07869	TO-14A VOA Ext. List Tedlar	EPA Method TO14A	1	04/10/2004 01:11	Roy R Mellott Jr	1
07870	TO-14A VOA Ext List cnt Tedlar	EPA Method TO14A	1	04/10/2004 01:11	Roy R Mellott Jr	1

Lancaster Laboratories

VOLATILE ORGANICS IN AIR
TEDLAR BAG SAMPLE
ANALYSIS DATA SHEET

Sample No.: BANKG Date Collected: 03/30/04 Date Received: 04/05/04
Lab Sample ID: 4248778 Date Analyzed: 04/10/04 Time Analyzed: 01:11
Injection Volume: 125 cc Nominal Volume: 125 cc Dilution Factor: 1.0
Instrument ID: HP4508 Lab File ID: C:\HPCHEM\1\DATA\APR09\2101016.D

CAS RN	COMPOUND NAME	CONCENTRATION UNITS: MDL ppb(v)	Q
115-07-1	Propene	2	
75-71-8	Dichlorodifluoromethane	2	
75-45-6	Chlorodifluoromethane	5	
76-14-2	Freon 114	0.2	U
74-87-3	Chloromethane	0.2	U
75-01-4	Vinyl Chloride	1	
106-99-0	1,3-Butadiene	1	U
74-83-9	Bromomethane	0.2	U
75-00-3	Chloroethane	21	
75-43-4	Dichlorofluoromethane	0.2	U
75-69-4	Trichlorofluoromethane	0.4	J
109-66-0	Pentane	2	
107-02-8	Acrolein	4	
75-35-4	1,1-Dichloroethene	25	
76-13-1	Freon 113	18	
67-64-1	Acetone	12	
74-88-4	Methyl Iodide	0.2	U
75-15-0	Carbon Disulfide	8	
75-05-8	Acetonitrile	7	
107-05-1	3-Chloropropene	0.5	U
75-09-2	Methylene Chloride	4	
75-65-0	tert-Butyl Alcohol	0.2	U
107-13-1	Acrylonitrile	0.5	U
156-60-5	trans-1,2-Dichloroethene	1	
1634-04-4	Methyl t-Butyl Ether	0.2	U
110-54-3	Hexane	0.9	J
75-34-3	1,1-Dichloroethane	22	
108-05-4	Vinyl Acetate	0.2	U
156-59-2	cis-1,2-Dichloroethene	16	
78-93-3	2-Butanone	4	
141-78-6	Ethyl Acetate	0.2	U
96-33-3	Methyl Acrylate	0.2	U
67-66-3	Chloroform	0.2	U
71-55-6	1,1,1-Trichloroethane	34	

U = Compound was undetected at the specified limit of quantitation.
B = Compound was found in method blank. D = analysis of diluted sample.
J = Compound was detected, but below the limit of quantitation.

MEMBER ACIL
Lancaster Laboratories, Inc.
2425 New Holland Pike
PO Box 12425
Lancaster, PA 17605-2425
717-656-2300 Fax: 717-656-2681

Lancaster Laboratories

VOLATILE ORGANICS IN AIR
TEDLAR BAG SAMPLE
ANALYSIS DATA SHEET

Sample No.: BANKG Date Collected: 03/30/04 Date Received: 04/05/04
Lab Sample ID: 4248778 Date Analyzed: 04/10/04 Time Analyzed: 01:11
Injection Volume: 125 cc Nominal Volume: 125 cc Dilution Factor: 1.0
Instrument ID: HP4508 Lab File ID: C:\HPCHEM\1\DATA\APR09\2101016.D

CAS RN	COMPOUND NAME	CONCENTRATION UNITS: MDL ppb(v)	Q
56-23-5	Carbon Tetrachloride	0.2	U
107-06-2	1,2-Dichloroethane	0.2	U
71-43-2	Benzene	0.6	J
540-84-1	Isooctane	0.3	J
142-82-5	Heptane	0.2	U
79-01-6	Trichloroethene	8	
140-88-5	Ethyl Acrylate	0.2	U
78-87-5	1,2-Dichloropropane	0.2	U
80-62-6	Methyl Methacrylate	0.2	U
74-95-3	Dibromomethane	0.2	U
123-91-1	1,4-Dioxane	0.2	U
75-27-4	Bromodichloromethane	0.2	U
10061-01-5	cis-1,3-Dichloropropene	0.2	U
108-10-1	4-Methyl-2-Pentanone	0.5	U
108-88-3	Toluene	8	
111-65-9	Octane	0.3	J
10061-02-6	trans-1,3-Dichloropropene	0.2	U
97-63-2	Ethyl Methacrylate	0.2	U
79-00-5	1,1,2-Trichloroethane	0.2	U
127-18-4	Tetrachloroethene	0.2	J
591-78-6	2-Hexanone	0.5	U
124-48-1	Dibromochloromethane	0.2	U
106-93-4	1,2-Dibromoethane	0.2	U
108-90-7	Chlorobenzene	0.2	U
630-20-6	1,1,1,2-Tetrachloroethane	0.2	U
100-41-4	Ethylbenzene	0.4	J
1330-20-7	m/p-Xylene	1	
95-47-6	o-Xylene	0.4	J
100-42-5	Styrene	0.4	J
75-25-2	Bromoform	0.2	U
98-82-8	Cumene	0.2	U
79-34-5	1,1,2,2-Tetrachloroethane	0.2	U
96-18-4	1,2,3-Trichloropropane	0.2	U
108-86-1	Bromobenzene	0.2	U

U = Compound was undetected at the specified limit of quantitation.
B = Compound was found in method blank. D = analysis of diluted sample.
J = Compound was detected, but below the limit of quantitation.

MEMBER ACIL
Lancaster Laboratories, Inc.
2425 New Holland Pike
PO Box 12425
Lancaster, PA 17605-2425
717-656-2300 Fax: 717-656-2681

Lancaster Laboratories

VOLATILE ORGANICS IN AIR
TEDLAR BAG SAMPLE
ANALYSIS DATA SHEET

Sample No.: BANKG Date Collected: 03/30/04 Date Received: 04/05/04
Lab Sample ID: 4248778 Date Analyzed: 04/10/04 Time Analyzed: 01:11
Injection Volume: 125 cc Nominal Volume: 125 cc Dilution Factor: 1.0
Instrument ID: HP4508 Lab File ID: C:\HPCHEM\1\DATA\APR09\2101016.D

CAS RN	COMPOUND NAME	CONCENTRATION UNITS: MDL ppb(v)	Q
622-96-8	4-Ethyltoluene	0.4	J
108-67-8	1,3,5-Trimethylbenzene	0.2	J
98-83-9	Alpha Methyl Styrene	0.2	U
95-63-6	1,2,4-Trimethylbenzene	0.7	J
541-73-1	1,3-Dichlorobenzene	0.5	U
106-46-7	1,4-Dichlorobenzene	0.5	U
95-50-1	1,2-Dichlorobenzene	0.5	U
67-72-1	Hexachloroethane	0.2	U
120-82-1	1,2,4-Trichlorobenzene	1	U
87-68-3	Hexachlorobutadiene	0.5	U

U = Compound was undetected at the specified limit of quantitation.
B = Compound was found in method blank. D = analysis of diluted sample.
J = Compound was detected, but below the limit of quantitation.

Analysis Report

Lancaster Laboratories

Lancaster Laboratories Sample No. AQ 4248779

BANK_F_TOTAL-033004 Tedlar Bag Grab Air Sample
Site Code: SC001 RFA #: ET04018
Dayton Thermal/Dayton, OH
Collected:03/30/2004 11:25 by SC

Account Number: 10160

Submitted: 04/05/2004 09:15
Reported: 04/28/2004 at 10:04
Discard: 06/28/2004

DaimlerChrysler Corporation
PO Box 537933
Livonia MI 48153-7933

BANKF SDG#: DCP54-02

CAT No.	Analysis Name	CAS Number	As Received Result	As Received Method Detection Limit	Units	Dilution Factor

Laboratory Chronicle

CAT No.	Analysis Name	Method	Trial#	Analysis Date and Time	Analyst	Dilution Factor
07869	TO-14A VOA Ext. List Tedlar	EPA Method TO14A	1	04/10/2004 01:53	Roy R Mellott Jr	1
07870	TO-14A VOA Ext List cnt Tedlar	EPA Method TO14A	1	04/10/2004 01:53	Roy R Mellott Jr	1

Lancaster Laboratories

VOLATILE ORGANICS IN AIR
TEDLAR BAG SAMPLE
ANALYSIS DATA SHEET

Sample No.: BANKF Date Collected: 03/30/04 Date Received: 04/05/04
Lab Sample ID: 4248779 Date Analyzed: 04/10/04 Time Analyzed: 01:53
Injection Volume: 125 cc Nominal Volume: 125 cc Dilution Factor: 1.0
Instrument ID: HP4508 Lab File ID: C:\HPCHEM\1\DATA\APR09\2201017.D

CAS RN	COMPOUND NAME	CONCENTRATION UNITS: MDL ppb(v)	Q
115-07-1	Propene	3	
75-71-8	Dichlorodifluoromethane	1	
75-45-6	Chlorodifluoromethane	6	
76-14-2	Freon 114	0.2	U
74-87-3	Chloromethane	0.9	J
75-01-4	Vinyl Chloride	6	
106-99-0	1,3-Butadiene	1	U
74-83-9	Bromomethane	0.2	U
75-00-3	Chloroethane	14	
75-43-4	Dichlorofluoromethane	0.2	U
75-69-4	Trichlorofluoromethane	0.4	J
109-66-0	Pentane	1	
107-02-8	Acrolein	3	
75-35-4	1,1-Dichloroethene	28	
76-13-1	Freon 113	59	
67-64-1	Acetone	13	
74-88-4	Methyl Iodide	0.2	U
75-15-0	Carbon Disulfide	8	
75-05-8	Acetonitrile	9	
107-05-1	3-Chloropropene	0.5	U
75-09-2	Methylene Chloride	4	
75-65-0	tert-Butyl Alcohol	0.2	U
107-13-1	Acrylonitrile	0.5	U
156-60-5	trans-1,2-Dichloroethene	3	
1634-04-4	Methyl t-Butyl Ether	0.2	U
110-54-3	Hexane	1	J
75-34-3	1,1-Dichloroethane	65	
108-05-4	Vinyl Acetate	0.2	U
156-59-2	cis-1,2-Dichloroethene	62	
78-93-3	2-Butanone	6	
141-78-6	Ethyl Acetate	0.2	U
96-33-3	Methyl Acrylate	0.2	U
67-66-3	Chloroform	1	
71-55-6	1,1,1-Trichloroethane	71	

U = Compound was undetected at the specified limit of quantitation.
B = Compound was found in method blank. D = analysis of diluted sample.
J = Compound was detected, but below the limit of quantitation.

MEMBER ACIL
Lancaster Laboratories, Inc.
2425 New Holland Pike
PO Box 12425
Lancaster, PA 17605-2425
717-656-2300 Fax: 717-656-2681

Lancaster Laboratories

VOLATILE ORGANICS IN AIR
TEDLAR BAG SAMPLE
ANALYSIS DATA SHEET

Sample No.: BANKF Date Collected: 03/30/04 Date Received: 04/05/04
Lab Sample ID: 4248779 Date Analyzed: 04/10/04 Time Analyzed: 01:53
Injection Volume: 125 cc Nominal Volume: 125 cc Dilution Factor: 1.0
Instrument ID: HP4508 Lab File ID: C:\HPCHEM\1\DATA\APR09\2201017.D

CAS RN	COMPOUND NAME	CONCENTRATION UNITS: MDL ppb(v)	Q
56-23-5	Carbon Tetrachloride	0.2	U
107-06-2	1,2-Dichloroethane	0.2	U
71-43-2	Benzene	0.6	J
540-84-1	Isooctane	0.2	J
142-82-5	Heptane	0.3	J
79-01-6	Trichloroethene	10	
140-88-5	Ethyl Acrylate	0.2	U
78-87-5	1,2-Dichloropropane	0.2	U
80-62-6	Methyl Methacrylate	0.2	U
74-95-3	Dibromomethane	0.2	U
123-91-1	1,4-Dioxane	0.2	U
75-27-4	Bromodichloromethane	0.2	U
10061-01-5	cis-1,3-Dichloropropene	0.2	U
108-10-1	4-Methyl-2-Pentanone	0.5	U
108-88-3	Toluene	7	
111-65-9	Octane	0.3	J
10061-02-6	trans-1,3-Dichloropropene	0.2	U
97-63-2	Ethyl Methacrylate	0.2	U
79-00-5	1,1,2-Trichloroethane	0.2	U
127-18-4	Tetrachloroethene	0.5	J
591-78-6	2-Hexanone	0.5	U
124-48-1	Dibromochloromethane	0.2	U
106-93-4	1,2-Dibromoethane	0.2	U
108-90-7	Chlorobenzene	0.2	U
630-20-6	1,1,1,2-Tetrachloroethane	0.2	U
100-41-4	Ethylbenzene	0.4	J
1330-20-7	m/p-Xylene	1	J
95-47-6	o-Xylene	0.4	J
100-42-5	Styrene	0.4	J
75-25-2	Bromoform	0.2	U
98-82-8	Cumene	0.2	U
79-34-5	1,1,2,2-Tetrachloroethane	0.2	U
96-18-4	1,2,3-Trichloropropane	0.2	U
108-86-1	Bromobenzene	0.2	U

U = Compound was undetected at the specified limit of quantitation.
B = Compound was found in method blank. D = analysis of diluted sample.
J = Compound was detected, but below the limit of quantitation.

MEMBER ACIL
Lancaster Laboratories, Inc.
2425 New Holland Pike
PO Box 12425
Lancaster, PA 17605-2425
717-656-2300 Fax: 717-656-2681

Lancaster Laboratories

VOLATILE ORGANICS IN AIR
TEDLAR BAG SAMPLE
ANALYSIS DATA SHEET

Sample No.: BANKF Date Collected: 03/30/04 Date Received: 04/05/04
Lab Sample ID: 4248779 Date Analyzed: 04/10/04 Time Analyzed: 01:53
Injection Volume: 125 cc Nominal Volume: 125 cc Dilution Factor: 1.0
Instrument ID: HP4508 Lab File ID: C:\HPCHEM\1\DATA\APR09\2201017.D

CAS RN	COMPOUND NAME	CONCENTRATION UNITS: MDL ppb(v)	Q
622-96-8	4-Ethyltoluene	0.2	U
108-67-8	1,3,5-Trimethylbenzene	0.2	U
98-83-9	Alpha Methyl Styrene	0.2	U
95-63-6	1,2,4-Trimethylbenzene	0.4	J
541-73-1	1,3-Dichlorobenzene	0.5	U
106-46-7	1,4-Dichlorobenzene	0.5	U
95-50-1	1,2-Dichlorobenzene	0.5	U
67-72-1	Hexachloroethane	0.2	U
120-82-1	1,2,4-Trichlorobenzene	1	U
87-68-3	Hexachlorobutadiene	0.5	U

U = Compound was undetected at the specified limit of quantitation.
B = Compound was found in method blank. D = analysis of diluted sample.
J = Compound was detected, but below the limit of quantitation.

MEMBER ACIL
Lancaster Laboratories, Inc.
2425 New Holland Pike
PO Box 12425
Lancaster, PA 17605-2425
717-656-2300 Fax: 717-656-2681

Analysis Report

Lancaster Laboratories

Lancaster Laboratories Sample No. AQ 4248780

BANK_E_TOTAL-033004 Tedlar Bag Grab Air Sample
Site Code: SC001 RFA #: ET04018
Dayton Thermal/Dayton, OH
Collected:03/30/2004 13:50 by SC

Account Number: 10160

Submitted: 04/05/2004 09:15
Reported: 04/28/2004 at 10:04
Discard: 06/28/2004

DaimlerChrysler Corporation
PO Box 537933
Livonia MI 48153-7933

BANKE SDG#: DCP54-03

CAT No.	Analysis Name	CAS Number	As Received Result	As Received Method Detection Limit	Units	Dilution Factor

Laboratory Chronicle

CAT No.	Analysis Name	Method	Trial#	Analysis Date and Time	Analyst	Dilution Factor
07869	TO-14A VOA Ext. List Tedlar	EPA Method TO14A	1	04/10/2004 02:35	Roy R Mellott Jr	1
07870	TO-14A VOA Ext List cnt Tedlar	EPA Method TO14A	1	04/10/2004 02:35	Roy R Mellott Jr	1

Lancaster Laboratories

VOLATILE ORGANICS IN AIR
TEDLAR BAG SAMPLE
ANALYSIS DATA SHEET

Sample No.: BANKE Date Collected: 03/30/04 Date Received: 04/05/04
Lab Sample ID: 4248780 Date Analyzed: 04/10/04 Time Analyzed: 02:35
Injection Volume: 125 cc Nominal Volume: 125 cc Dilution Factor: 1.0
Instrument ID: HP4508 Lab File ID: C:\HPCHEM\1\DATA\APR09\2301018.D

CAS RN	COMPOUND NAME	CONCENTRATION UNITS: MDL ppb(v)	Q
115-07-1	Propene	8	
75-71-8	Dichlorodifluoromethane	1	J
75-45-6	Chlorodifluoromethane	4	
76-14-2	Freon 114	0.2	U
74-87-3	Chloromethane	0.3	J
75-01-4	Vinyl Chloride	73	
106-99-0	1,3-Butadiene	1	U
74-83-9	Bromomethane	0.2	U
75-00-3	Chloroethane	27	
75-43-4	Dichlorofluoromethane	0.2	U
75-69-4	Trichlorofluoromethane	0.2	J
109-66-0	Pentane	3	
107-02-8	Acrolein	3	
75-35-4	1,1-Dichloroethene	2	
76-13-1	Freon 113	5	
67-64-1	Acetone	15	
74-88-4	Methyl Iodide	0.2	U
75-15-0	Carbon Disulfide	8	
75-05-8	Acetonitrile	11	
107-05-1	3-Chloropropene	0.5	U
75-09-2	Methylene Chloride	4	
75-65-0	tert-Butyl Alcohol	0.2	U
107-13-1	Acrylonitrile	0.5	U
156-60-5	trans-1,2-Dichloroethene	1	
1634-04-4	Methyl t-Butyl Ether	0.2	U
110-54-3	Hexane	2	
75-34-3	1,1-Dichloroethane	73	
108-05-4	Vinyl Acetate	0.2	U
156-59-2	cis-1,2-Dichloroethene	9	
78-93-3	2-Butanone	4	
141-78-6	Ethyl Acetate	0.2	U
96-33-3	Methyl Acrylate	0.2	U
67-66-3	Chloroform	0.8	J
71-55-6	1,1,1-Trichloroethane	17	

U = Compound was undetected at the specified limit of quantitation.
B = Compound was found in method blank. D = analysis of diluted sample.
J = Compound was detected, but below the limit of quantitation.

Lancaster Laboratories

VOLATILE ORGANICS IN AIR
TEDLAR BAG SAMPLE
ANALYSIS DATA SHEET

Sample No.: BANKE Date Collected: 03/30/04 Date Received: 04/05/04
Lab Sample ID: 4248780 Date Analyzed: 04/10/04 Time Analyzed: 02:35
Injection Volume: 125 cc Nominal Volume: 125 cc Dilution Factor: 1.0
Instrument ID: HP4508 Lab File ID: C:\HPCHEM\1\DATA\APR09\2301018.D

CAS RN	COMPOUND NAME	CONCENTRATION UNITS: MDL ppb(v)	Q
56-23-5	Carbon Tetrachloride	0.2	U
107-06-2	1,2-Dichloroethane	0.2	U
71-43-2	Benzene	0.8	J
540-84-1	Isooctane	0.2	J
142-82-5	Heptane	0.3	J
79-01-6	Trichloroethene	5	
140-88-5	Ethyl Acrylate	0.2	U
78-87-5	1,2-Dichloropropane	0.2	U
80-62-6	Methyl Methacrylate	0.2	U
74-95-3	Dibromomethane	0.2	U
123-91-1	1,4-Dioxane	0.2	U
75-27-4	Bromodichloromethane	0.2	U
10061-01-5	cis-1,3-Dichloropropene	0.2	U
108-10-1	4-Methyl-2-Pentanone	0.5	U
108-88-3	Toluene	7	
111-65-9	Octane	0.4	J
10061-02-6	trans-1,3-Dichloropropene	0.2	U
97-63-2	Ethyl Methacrylate	0.2	U
79-00-5	1,1,2-Trichloroethane	0.2	U
127-18-4	Tetrachloroethene	0.6	J
591-78-6	2-Hexanone	0.5	U
124-48-1	Dibromochloromethane	0.2	U
106-93-4	1,2-Dibromoethane	0.2	U
108-90-7	Chlorobenzene	0.2	U
630-20-6	1,1,1,2-Tetrachloroethane	0.2	U
100-41-4	Ethylbenzene	0.4	J
1330-20-7	m/p-Xylene	1	J
95-47-6	o-Xylene	0.3	J
100-42-5	Styrene	0.3	J
75-25-2	Bromoform	0.2	U
98-82-8	Cumene	0.2	U
79-34-5	1,1,2,2-Tetrachloroethane	0.2	U
96-18-4	1,2,3-Trichloropropane	0.2	U
108-86-1	Bromobenzene	0.2	U

U = Compound was undetected at the specified limit of quantitation.
B = Compound was found in method blank. D = analysis of diluted sample.
J = Compound was detected, but below the limit of quantitation.

MEMBER ACIL
Lancaster Laboratories, Inc.
2425 New Holland Pike
PO Box 12425
Lancaster, PA 17605-2425
717-656-2300 Fax: 717-656-2681

Lancaster Laboratories

VOLATILE ORGANICS IN AIR
TEDLAR BAG SAMPLE
ANALYSIS DATA SHEET

Sample No.: BANKE Date Collected: 03/30/04 Date Received: 04/05/04
Lab Sample ID: 4248780 Date Analyzed: 04/10/04 Time Analyzed: 02:35
Injection Volume: 125 cc Nominal Volume: 125 cc Dilution Factor: 1.0
Instrument ID: HP4508 Lab File ID: C:\HPCHEM\1\DATA\APR09\2301018.D

CAS RN	COMPOUND NAME	CONCENTRATION UNITS: MDL ppb(v)	Q
622-96-8	4-Ethyltoluene	0.2	J
108-67-8	1,3,5-Trimethylbenzene	0.2	U
98-83-9	Alpha Methyl Styrene	0.2	U
95-63-6	1,2,4-Trimethylbenzene	0.3	J
541-73-1	1,3-Dichlorobenzene	0.5	U
106-46-7	1,4-Dichlorobenzene	0.5	U
95-50-1	1,2-Dichlorobenzene	0.5	U
67-72-1	Hexachloroethane	0.2	U
120-82-1	1,2,4-Trichlorobenzene	1	U
87-68-3	Hexachlorobutadiene	0.5	U

U = Compound was undetected at the specified limit of quantitation.
B = Compound was found in method blank. D = analysis of diluted sample.
J = Compound was detected, but below the limit of quantitation.

MEMBER ACIL
Lancaster Laboratories, Inc.
2425 New Holland Pike
PO Box 12425
Lancaster, PA 17605-2425
717-656-2300 Fax: 717-656-2681

Analysis Report

Lancaster Laboratories

Lancaster Laboratories Sample No. AQ 4248781

BANK_D_TOTAL-033004 Tedlar Bag Grab Air Sample
Site Code: SC001 RFA #: ET04018
Dayton Thermal/Dayton, OH
Collected:03/30/2004 15:08 by SC

Account Number: 10160

Submitted: 04/05/2004 09:15
Reported: 04/28/2004 at 10:04
Discard: 06/28/2004

DaimlerChrysler Corporation
PO Box 537933
Livonia MI 48153-7933

BANKD SDG#: DCP54-04

CAT No.	Analysis Name	CAS Number	As Received Result	As Received Method Detection Limit	Units	Dilution Factor

Laboratory Chronicle

CAT No.	Analysis Name	Method	Trial#	Analysis Date and Time	Analyst	Dilution Factor
07869	TO-14A VOA Ext. List Tedlar	EPA Method TO14A	1	04/12/2004 23:06	Douglas Graham	5
07869	TO-14A VOA Ext. List Tedlar	EPA Method TO14A	1	04/13/2004 00:25	Douglas Graham	50
07870	TO-14A VOA Ext List cnt Tedlar	EPA Method TO14A	1	04/12/2004 23:06	Douglas Graham	5

Lancaster Laboratories

VOLATILE ORGANICS IN AIR
SUMMA CANISTER SAMPLE
ANALYSIS DATA SHEET

Sample No.: BANKD
Lab Sample ID: 4248781
Canister ID: SUMMA
Injection Volume: 25 cc
Instrument ID: HP4508

Date Collected: 03/30/04
Date Analyzed: 04/12/04
Pressure Rec'd: 14.7 psia
Nominal Volume: 125 cc
Lab File ID: C:\HPCHEM\1\DATA\APR12\0701008.D

Date Received: 04/05/04
Time Analyzed: 23:06
Final Pressure: 14.7 psia
Dilution Factor: 5.0

CAS RN	COMPOUND NAME	CONCENTRATION UNITS: MDL ppb(v)	Q
115-07-1	Propene	64	D
75-71-8	Dichlorodifluoromethane	1	J D
75-45-6	Chlorodifluoromethane	17	D
76-14-2	Freon 114	1	U
74-87-3	Chloromethane	1	U
75-01-4	Vinyl Chloride	640	D
106-99-0	1,3-Butadiene	5	U
74-83-9	Bromomethane	1	U
75-00-3	Chloroethane	210	D
75-43-4	Dichlorofluoromethane	1	U
75-69-4	Trichlorofluoromethane	1	U
109-66-0	Pentane	21	D
107-02-8	Acrolein	3	U
75-35-4	1,1-Dichloroethene	4	J D
76-13-1	Freon 113	9	D
67-64-1	Acetone	39	D
74-88-4	Methyl Iodide	1	U
75-15-0	Carbon Disulfide	17	D
75-05-8	Acetonitrile	51	D
107-05-1	3-Chloropropene	3	U
75-09-2	Methylene Chloride	16	D
75-65-0	tert-Butyl Alcohol	1	U
107-13-1	Acrylonitrile	3	U
156-60-5	trans-1,2-Dichloroethene	5	J D
1634-04-4	Methyl t-Butyl Ether	1	U
110-54-3	Hexane	11	D
75-34-3	1,1-Dichloroethane	210	D
108-05-4	Vinyl Acetate	1	U
156-59-2	cis-1,2-Dichloroethene	100	D
78-93-3	2-Butanone	8	D
141-78-6	Ethyl Acetate	1	U
96-33-3	Methyl Acrylate	1	U
67-66-3	Chloroform	5	J D
71-55-6	1,1,1-Trichloroethane	37	D

U = Compound was undetected at the specified limit of quantitation.
B = Compound was found in method blank. D = analysis of diluted sample.
J = Compound was detected, but below the limit of quantitation.
NOTE: Limits of detection were raised due to the high concentration of volatile organic compounds in this sample.

MEMBER ACIL
Lancaster Laboratories, Inc.
2425 New Holland Pike
PO Box 12425
Lancaster, PA 17605-2425
717-656-2300 Fax: 717-656-2681

Lancaster Laboratories

VOLATILE ORGANICS IN AIR
SUMMA CANISTER SAMPLE
ANALYSIS DATA SHEET

Sample No.: BANKD
Lab Sample ID: 4248781
Canister ID: SUMMA
Injection Volume: 25 cc
Instrument ID: HP4508

Date Collected: 03/30/04
Date Analyzed: 04/12/04
Pressure Rec'd: 14.7 psia
Nominal Volume: 125 cc
Lab File ID: C:\HPCHEM\1\DATA\APR12\0701008.D

Date Received: 04/05/04
Time Analyzed: 23:06
Final Pressure: 14.7 psia
Dilution Factor: 5.0

CAS RN	COMPOUND NAME	CONCENTRATION UNITS: MDL ppb(v)	Q	
56-23-5	Carbon Tetrachloride	1	U	
107-06-2	1,2-Dichloroethane	1	U	
71-43-2	Benzene	3	J	D
540-84-1	Isooctane	1	U	
142-82-5	Heptane	1	U	
79-01-6	Trichloroethene	54		D
140-88-5	Ethyl Acrylate	1	U	
78-87-5	1,2-Dichloropropane	1	U	
80-62-6	Methyl Methacrylate	1	U	
74-95-3	Dibromomethane	1	U	
123-91-1	1,4-Dioxane	1	U	
75-27-4	Bromodichloromethane	1	U	
10061-01-5	cis-1,3-Dichloropropene	1	U	
108-10-1	4-Methyl-2-Pentanone	3	U	
108-88-3	Toluene	8		D
111-65-9	Octane	1	U	
10061-02-6	trans-1,3-Dichloropropene	1	U	
97-63-2	Ethyl Methacrylate	1	U	
79-00-5	1,1,2-Trichloroethane	1	U	
127-18-4	Tetrachloroethene	2	J	D
591-78-6	2-Hexanone	3	U	
124-48-1	Dibromochloromethane	1	U	
106-93-4	1,2-Dibromoethane	1	U	
108-90-7	Chlorobenzene	1	U	
630-20-6	1,1,1,2-Tetrachloroethane	1	U	
100-41-4	Ethylbenzene	1	J	D
1330-20-7	m/p-Xylene	1	J	D
95-47-6	o-Xylene	1	U	
100-42-5	Styrene	1	U	
75-25-2	Bromoform	1	U	
98-82-8	Cumene	1	U	
79-34-5	1,1,2,2-Tetrachloroethane	1	U	
96-18-4	1,2,3-Trichloropropane	1	U	
108-86-1	Bromobenzene	1	U	

U = Compound was undetected at the specified limit of quantitation.
B = Compound was found in method blank. D = analysis of diluted sample.
J = Compound was detected, but below the limit of quantitation.
NOTE: Limits of detection were raised due to the high concentration of volatile organic compounds in this sample.

MEMBER ACIL
Lancaster Laboratories, Inc.
2425 New Holland Pike
PO Box 12425
Lancaster, PA 17605-2425
717-656-2300 Fax: 717-656-2681

Lancaster Laboratories

VOLATILE ORGANICS IN AIR
SUMMA CANISTER SAMPLE
ANALYSIS DATA SHEET

Sample No.: BANKD
Lab Sample ID: 4248781
Canister ID: SUMMA
Injection Volume: 25 cc
Instrument ID: HP4508

Date Collected: 03/30/04
Date Analyzed: 04/12/04
Pressure Rec'd: 14.7 psia
Nominal Volume: 125 cc
Lab File ID: C:\HPCHEM\1\DATA\APR12\0701008.D

Date Received: 04/05/04
Time Analyzed: 23:06
Final Pressure: 14.7 psia
Dilution Factor: 5.0

CAS RN	COMPOUND NAME	CONCENTRATION UNITS: MDL ppb(v)	Q
622-96-8	4-Ethyltoluene	1	U
108-67-8	1,3,5-Trimethylbenzene	1	U
98-83-9	Alpha Methyl Styrene	1	U
95-63-6	1,2,4-Trimethylbenzene	1	U
541-73-1	1,3-Dichlorobenzene	3	U
106-46-7	1,4-Dichlorobenzene	3	U
95-50-1	1,2-Dichlorobenzene	3	U
67-72-1	Hexachloroethane	1	U
120-82-1	1,2,4-Trichlorobenzene	5	U
87-68-3	Hexachlorobutadiene	3	U

U = Compound was undetected at the specified limit of quantitation.
B = Compound was found in method blank. D = analysis of diluted sample.
J = Compound was detected, but below the limit of quantitation.
NOTE: Limits of detection were raised due to the high concentration of volatile organic compounds in this sample.

MEMBER ACIL
Lancaster Laboratories, Inc.
2425 New Holland Pike
PO Box 12425
Lancaster, PA 17605-2425
717-656-2300 Fax: 717-656-2681

Analysis Report

Lancaster Laboratories

Lancaster Laboratories Sample No. AQ 4248782

BANK_B_TOTAL-033004 Tedlar Bag Grab Air Sample
Site Code: SC001 RFA #: ET04018
Dayton Thermal/Dayton, OH
Collected:03/30/2004 16:45 by SC

Account Number: 10160

Submitted: 04/05/2004 09:15
Reported: 04/28/2004 at 10:04
Discard: 06/28/2004

DaimlerChrysler Corporation
PO Box 537933
Livonia MI 48153-7933

BANKB SDG#: DCP54-05

CAT No.	Analysis Name	CAS Number	As Received Result	As Received Method Detection Limit	Units	Dilution Factor

Laboratory Chronicle

CAT No.	Analysis Name	Method	Trial#	Analysis Date and Time	Analyst	Dilution Factor
07869	TO-14A VOA Ext. List Tedlar	EPA Method TO14A	1	04/10/2004 04:00	Roy R Mellott Jr	1
07870	TO-14A VOA Ext List cnt Tedlar	EPA Method TO14A	1	04/10/2004 04:00	Roy R Mellott Jr	1

Lancaster Laboratories

VOLATILE ORGANICS IN AIR
TEDLAR BAG SAMPLE
ANALYSIS DATA SHEET

Sample No.: BANKB Date Collected: 03/30/04 Date Received: 04/05/04
Lab Sample ID: 4248782 Date Analyzed: 04/10/04 Time Analyzed: 04:00
Injection Volume: 125 cc Nominal Volume: 125 cc Dilution Factor: 1.0
Instrument ID: HP4508 Lab File ID: C:\HPCHEM\1\DATA\APR09\2501020.D

CAS RN	COMPOUND NAME	CONCENTRATION UNITS: MDL ppb(v)	Q
115-07-1	Propene	3	
75-71-8	Dichlorodifluoromethane	2	
75-45-6	Chlorodifluoromethane	10	
76-14-2	Freon 114	0.2	U
74-87-3	Chloromethane	0.3	J
75-01-4	Vinyl Chloride	7	
106-99-0	1,3-Butadiene	1	U
74-83-9	Bromomethane	0.2	U
75-00-3	Chloroethane	4	
75-43-4	Dichlorofluoromethane	0.2	U
75-69-4	Trichlorofluoromethane	0.5	J
109-66-0	Pentane	2	
107-02-8	Acrolein	4	
75-35-4	1,1-Dichloroethene	0.7	J
76-13-1	Freon 113	31	
67-64-1	Acetone	14	
74-88-4	Methyl Iodide	0.2	U
75-15-0	Carbon Disulfide	9	
75-05-8	Acetonitrile	10	
107-05-1	3-Chloropropene	0.5	U
75-09-2	Methylene Chloride	5	
75-65-0	tert-Butyl Alcohol	0.7	J
107-13-1	Acrylonitrile	0.5	U
156-60-5	trans-1,2-Dichloroethene	0.7	J
1634-04-4	Methyl t-Butyl Ether	0.2	U
110-54-3	Hexane	2	
75-34-3	1,1-Dichloroethane	39	
108-05-4	Vinyl Acetate	0.2	U
156-59-2	cis-1,2-Dichloroethene	13	
78-93-3	2-Butanone	5	
141-78-6	Ethyl Acetate	0.2	U
96-33-3	Methyl Acrylate	0.2	U
67-66-3	Chloroform	1	
71-55-6	1,1,1-Trichloroethane	24	

U = Compound was undetected at the specified limit of quantitation.
B = Compound was found in method blank. D = analysis of diluted sample.
J = Compound was detected, but below the limit of quantitation.

MEMBER ACIL
Lancaster Laboratories, Inc.
2425 New Holland Pike
PO Box 12425
Lancaster, PA 17605-2425
717-656-2300 Fax: 717-656-2681

Lancaster Laboratories

VOLATILE ORGANICS IN AIR
TEDLAR BAG SAMPLE
ANALYSIS DATA SHEET

Sample No.: BANKB Date Collected: 03/30/04 Date Received: 04/05/04
Lab Sample ID: 4248782 Date Analyzed: 04/10/04 Time Analyzed: 04:00
Injection Volume: 125 cc Nominal Volume: 125 cc Dilution Factor: 1.0
Instrument ID: HP4508 Lab File ID: C:\HPCHEM\1\DATA\APR09\2501020.D

CAS RN	COMPOUND NAME	CONCENTRATION UNITS: MDL ppb(v)	Q
56-23-5	Carbon Tetrachloride	0.2	U
107-06-2	1,2-Dichloroethane	0.2	U
71-43-2	Benzene	1	
540-84-1	Isooctane	0.2	J
142-82-5	Heptane	0.5	J
79-01-6	Trichloroethene	14	
140-88-5	Ethyl Acrylate	0.2	U
78-87-5	1,2-Dichloropropane	0.4	J
80-62-6	Methyl Methacrylate	0.2	U
74-95-3	Dibromomethane	0.2	U
123-91-1	1,4-Dioxane	0.2	U
75-27-4	Bromodichloromethane	0.2	U
10061-01-5	cis-1,3-Dichloropropene	0.2	U
108-10-1	4-Methyl-2-Pentanone	0.5	U
108-88-3	Toluene	8	
111-65-9	Octane	0.5	J
10061-02-6	trans-1,3-Dichloropropene	0.2	U
97-63-2	Ethyl Methacrylate	0.2	U
79-00-5	1,1,2-Trichloroethane	0.2	U
127-18-4	Tetrachloroethene	2	
591-78-6	2-Hexanone	0.5	U
124-48-1	Dibromochloromethane	0.2	U
106-93-4	1,2-Dibromoethane	0.2	U
108-90-7	Chlorobenzene	0.2	U
630-20-6	1,1,1,2-Tetrachloroethane	0.2	U
100-41-4	Ethylbenzene	0.5	J
1330-20-7	m/p-Xylene	2	
95-47-6	o-Xylene	0.6	J
100-42-5	Styrene	0.3	J
75-25-2	Bromoform	0.2	U
98-82-8	Cumene	0.2	U
79-34-5	1,1,2,2-Tetrachloroethane	0.2	U
96-18-4	1,2,3-Trichloropropane	0.2	U
108-86-1	Bromobenzene	0.2	U

U = Compound was undetected at the specified limit of quantitation.
B = Compound was found in method blank. D = analysis of diluted sample.
J = Compound was detected, but below the limit of quantitation.

MEMBER ACIL
Lancaster Laboratories, Inc.
2425 New Holland Pike
PO Box 12425
Lancaster, PA 17605-2425
717-656-2300 Fax: 717-656-2681

Lancaster Laboratories

VOLATILE ORGANICS IN AIR
TEDLAR BAG SAMPLE
ANALYSIS DATA SHEET

Sample No.: BANKB
Lab Sample ID: 4248782
Injection Volume: 125 cc
Instrument ID: HP4508

Date Collected: 03/30/04
Date Analyzed: 04/10/04
Nominal Volume: 125 cc
Lab File ID: C:\HPCHEM\1\DATA\APR09\2501020.D

Date Received: 04/05/04
Time Analyzed: 04:00
Dilution Factor: 1.0

CAS RN	COMPOUND NAME	CONCENTRATION UNITS: MDL ppb(v)	Q
622-96-8	4-Ethyltoluene	0.2	J
108-67-8	1,3,5-Trimethylbenzene	0.2	U
98-83-9	Alpha Methyl Styrene	0.2	U
95-63-6	1,2,4-Trimethylbenzene	0.4	J
541-73-1	1,3-Dichlorobenzene	0.5	U
106-46-7	1,4-Dichlorobenzene	0.5	U
95-50-1	1,2-Dichlorobenzene	0.5	U
67-72-1	Hexachloroethane	0.2	U
120-82-1	1,2,4-Trichlorobenzene	1	U
87-68-3	Hexachlorobutadiene	0.5	U

U = Compound was undetected at the specified limit of quantitation.
B = Compound was found in method blank. D = analysis of diluted sample.
J = Compound was detected, but below the limit of quantitation.

MEMBER ACIL

Lancaster Laboratories, Inc.
2425 New Holland Pike
PO Box 12425
Lancaster, PA 17605-2425
717-656-2300 Fax: 717-656-2681

Analysis Report

Lancaster Laboratories

Lancaster Laboratories Sample No. AQ 4248783

BANK_A_TOTAL-033004 Tedlar Bag Grab Air Sample
Site Code: SC001 RFA #: ET04018
Dayton Thermal/Dayton, OH
Collected:03/30/2004 17:49 by SC

Account Number: 10160

Submitted: 04/05/2004 09:15
Reported: 04/28/2004 at 10:04
Discard: 06/28/2004

DaimlerChrysler Corporation
PO Box 537933
Livonia MI 48153-7933

BANKA SDG#: DCP54-06

CAT No.	Analysis Name	CAS Number	As Received Result	As Received Method Detection Limit	Units	Dilution Factor

Laboratory Chronicle

CAT No.	Analysis Name	Method	Trial#	Analysis Date and Time	Analyst	Dilution Factor
07869	TO-14A VOA Ext. List Tedlar	EPA Method TO14A	1	04/10/2004 04:43	Roy R Mellott Jr	1
07870	TO-14A VOA Ext List cnt Tedlar	EPA Method TO14A	1	04/10/2004 04:43	Roy R Mellott Jr	1

Lancaster Laboratories

VOLATILE ORGANICS IN AIR
TEDLAR BAG SAMPLE
ANALYSIS DATA SHEET

Sample No.: BANKA Date Collected: 03/30/04 Date Received: 04/05/04
Lab Sample ID: 4248783 Date Analyzed: 04/10/04 Time Analyzed: 04:43
Injection Volume: 125 cc Nominal Volume: 125 cc Dilution Factor: 1.0
Instrument ID: HP4508 Lab File ID: C:\HPCHEM\1\DATA\APR09\2601021.D

CAS RN	COMPOUND NAME	CONCENTRATION UNITS: MDL ppb(v)	Q
115-07-1	Propene	0.9	J
75-71-8	Dichlorodifluoromethane	2	
75-45-6	Chlorodifluoromethane	14	
76-14-2	Freon 114	0.2	U
74-87-3	Chloromethane	0.3	J
75-01-4	Vinyl Chloride	1	
106-99-0	1,3-Butadiene	1	U
74-83-9	Bromomethane	0.2	U
75-00-3	Chloroethane	1	
75-43-4	Dichlorofluoromethane	0.2	U
75-69-4	Trichlorofluoromethane	0.5	J
109-66-0	Pentane	2	
107-02-8	Acrolein	4	
75-35-4	1,1-Dichloroethene	0.6	J
76-13-1	Freon 113	54	
67-64-1	Acetone	20	
74-88-4	Methyl Iodide	0.2	U
75-15-0	Carbon Disulfide	9	
75-05-8	Acetonitrile	7	
107-05-1	3-Chloropropene	0.5	U
75-09-2	Methylene Chloride	4	
75-65-0	tert-Butyl Alcohol	2	
107-13-1	Acrylonitrile	0.5	U
156-60-5	trans-1,2-Dichloroethene	0.4	J
1634-04-4	Methyl t-Butyl Ether	0.3	J
110-54-3	Hexane	2	
75-34-3	1,1-Dichloroethane	13	
108-05-4	Vinyl Acetate	0.2	U
156-59-2	cis-1,2-Dichloroethene	7	
78-93-3	2-Butanone	4	
141-78-6	Ethyl Acetate	0.2	U
96-33-3	Methyl Acrylate	0.2	U
67-66-3	Chloroform	0.8	J
71-55-6	1,1,1-Trichloroethane	22	

U = Compound was undetected at the specified limit of quantitation.
B = Compound was found in method blank. D = analysis of diluted sample.
J = Compound was detected, but below the limit of quantitation.

Lancaster Laboratories

VOLATILE ORGANICS IN AIR
TEDLAR BAG SAMPLE
ANALYSIS DATA SHEET

Sample No.: BANKA Date Collected: 03/30/04 Date Received: 04/05/04
Lab Sample ID: 4248783 Date Analyzed: 04/10/04 Time Analyzed: 04:43
Injection Volume: 125 cc Nominal Volume: 125 cc Dilution Factor: 1.0
Instrument ID: HP4508 Lab File ID: C:\HPCHEM\1\DATA\APR09\2601021.D

CAS RN	COMPOUND NAME	CONCENTRATION UNITS: MDL ppb(v)	Q
56-23-5	Carbon Tetrachloride	0.2	U
107-06-2	1,2-Dichloroethane	0.2	U
71-43-2	Benzene	0.9	J
540-84-1	Isooctane	0.4	J
142-82-5	Heptane	0.6	J
79-01-6	Trichloroethene	10	
140-88-5	Ethyl Acrylate	0.2	U
78-87-5	1,2-Dichloropropane	0.2	U
80-62-6	Methyl Methacrylate	0.2	U
74-95-3	Dibromomethane	0.2	U
123-91-1	1,4-Dioxane	0.2	U
75-27-4	Bromodichloromethane	0.2	U
10061-01-5	cis-1,3-Dichloropropene	0.2	U
108-10-1	4-Methyl-2-Pentanone	0.5	U
108-88-3	Toluene	8	
111-65-9	Octane	0.3	J
10061-02-6	trans-1,3-Dichloropropene	0.2	U
97-63-2	Ethyl Methacrylate	0.2	U
79-00-5	1,1,2-Trichloroethane	0.2	U
127-18-4	Tetrachloroethene	1	
591-78-6	2-Hexanone	0.5	U
124-48-1	Dibromochloromethane	0.2	U
106-93-4	1,2-Dibromoethane	0.2	U
108-90-7	Chlorobenzene	0.2	U
630-20-6	1,1,1,2-Tetrachloroethane	0.2	U
100-41-4	Ethylbenzene	0.4	J
1330-20-7	m/p-Xylene	1	
95-47-6	o-Xylene	0.5	J
100-42-5	Styrene	0.3	J
75-25-2	Bromoform	0.2	U
98-82-8	Cumene	0.2	U
79-34-5	1,1,2,2-Tetrachloroethane	0.2	U
96-18-4	1,2,3-Trichloropropane	0.2	U
108-86-1	Bromobenzene	0.2	U

U = Compound was undetected at the specified limit of quantitation.
B = Compound was found in method blank. D = analysis of diluted sample.
J = Compound was detected, but below the limit of quantitation.

MEMBER ACIL
Lancaster Laboratories, Inc.
2425 New Holland Pike
PO Box 12425
Lancaster, PA 17605-2425
717-656-2300 Fax: 717-656-2681

Lancaster Laboratories

VOLATILE ORGANICS IN AIR
TEDLAR BAG SAMPLE
ANALYSIS DATA SHEET

Sample No.: BANKA Date Collected: 03/30/04 Date Received: 04/05/04
Lab Sample ID: 4248783 Date Analyzed: 04/10/04 Time Analyzed: 04:43
Injection Volume: 125 cc Nominal Volume: 125 cc Dilution Factor: 1.0
Instrument ID: HP4508 Lab File ID: C:\HPCHEM\1\DATA\APR09\2601021.D

CAS RN	COMPOUND NAME	CONCENTRATION UNITS: MDL ppb(v)	Q
622-96-8	4-Ethyltoluene	0.2	J
108-67-8	1,3,5-Trimethylbenzene	0.2	U
98-83-9	Alpha Methyl Styrene	0.2	U
95-63-6	1,2,4-Trimethylbenzene	0.4	J
541-73-1	1,3-Dichlorobenzene	0.5	U
106-46-7	1,4-Dichlorobenzene	0.5	U
95-50-1	1,2-Dichlorobenzene	0.5	U
67-72-1	Hexachloroethane	0.2	U
120-82-1	1,2,4-Trichlorobenzene	1	U
87-68-3	Hexachlorobutadiene	0.5	U

U = Compound was undetected at the specified limit of quantitation.
B = Compound was found in method blank. D = analysis of diluted sample.
J = Compound was detected, but below the limit of quantitation.

MEMBER ACIL
Lancaster Laboratories, Inc.
2425 New Holland Pike
PO Box 12425
Lancaster, PA 17605-2425
717-656-2300 Fax: 717-656-2681

Analysis Report

Lancaster Laboratories

Lancaster Laboratories Sample No. AQ 4248784

BANK_I_TOTAL-033104 Tedlar Bag Grab Air Sample
Site Code: SC001 RFA #: ET04018
Dayton Thermal/Dayton, OH
Collected:03/31/2004 09:42 by SC

Account Number: 10160

Submitted: 04/05/2004 09:15
Reported: 04/28/2004 at 10:04
Discard: 06/28/2004

DaimlerChrysler Corporation
PO Box 537933
Livonia MI 48153-7933

BANKI SDG#: DCP54-07

CAT No.	Analysis Name	CAS Number	As Received Result	As Received Method Detection Limit	Units	Dilution Factor

Laboratory Chronicle

CAT No.	Analysis Name	Method	Trial#	Analysis Date and Time	Analyst	Dilution Factor
07869	TO-14A VOA Ext. List Tedlar	EPA Method TO14A	1	04/10/2004 05:25	Roy R Mellott Jr	1
07870	TO-14A VOA Ext List cnt Tedlar	EPA Method TO14A	1	04/10/2004 05:25	Roy R Mellott Jr	1

Lancaster Laboratories

VOLATILE ORGANICS IN AIR
TEDLAR BAG SAMPLE
ANALYSIS DATA SHEET

Sample No.: BANKI Date Collected: 03/30/04 Date Received: 04/05/04
Lab Sample ID: 4248784 Date Analyzed: 04/10/04 Time Analyzed: 05:25
Injection Volume: 125 cc Nominal Volume: 125 cc Dilution Factor: 1.0
Instrument ID: HP4508 Lab File ID: C:\HPCHEM\1\DATA\APR09\2701022.D

CAS RN	COMPOUND NAME	CONCENTRATION UNITS: MDL ppb(v)	Q
115-07-1	Propene	5	
75-71-8	Dichlorodifluoromethane	5	
75-45-6	Chlorodifluoromethane	5	
76-14-2	Freon 114	0.2	U
74-87-3	Chloromethane	0.4	J
75-01-4	Vinyl Chloride	18	
106-99-0	1,3-Butadiene	1	U
74-83-9	Bromomethane	0.2	U
75-00-3	Chloroethane	43	
75-43-4	Dichlorofluoromethane	0.2	U
75-69-4	Trichlorofluoromethane	0.5	J
109-66-0	Pentane	1	
107-02-8	Acrolein	3	
75-35-4	1,1-Dichloroethene	37	
76-13-1	Freon 113	50	
67-64-1	Acetone	12	
74-88-4	Methyl Iodide	0.2	U
75-15-0	Carbon Disulfide	6	
75-05-8	Acetonitrile	7	
107-05-1	3-Chloropropene	0.5	U
75-09-2	Methylene Chloride	4	
75-65-0	tert-Butyl Alcohol	2	
107-13-1	Acrylonitrile	0.5	U
156-60-5	trans-1,2-Dichloroethene	3	
1634-04-4	Methyl t-Butyl Ether	0.2	U
110-54-3	Hexane	0.7	J
75-34-3	1,1-Dichloroethane	36	
108-05-4	Vinyl Acetate	0.2	U
156-59-2	cis-1,2-Dichloroethene	32	
78-93-3	2-Butanone	3	
141-78-6	Ethyl Acetate	0.2	U
96-33-3	Methyl Acrylate	0.2	U
67-66-3	Chloroform	0.6	J
71-55-6	1,1,1-Trichloroethane	33	

U = Compound was undetected at the specified limit of quantitation.
B = Compound was found in method blank. D = analysis of diluted sample.
J = Compound was detected, but below the limit of quantitation.

MEMBER ACIL
Lancaster Laboratories, Inc.
2425 New Holland Pike
PO Box 12425
Lancaster, PA 17605-2425
717-656-2300 Fax: 717-656-2681

Lancaster Laboratories

VOLATILE ORGANICS IN AIR
TEDLAR BAG SAMPLE
ANALYSIS DATA SHEET

Sample No.: BANKI Date Collected: 03/30/04 Date Received: 04/05/04
Lab Sample ID: 4248784 Date Analyzed: 04/10/04 Time Analyzed: 05:25
Injection Volume: 125 cc Nominal Volume: 125 cc Dilution Factor: 1.0
Instrument ID: HP4508 Lab File ID: C:\HPCHEM\1\DATA\APR09\2701022.D

CAS RN	COMPOUND NAME	CONCENTRATION UNITS: MDL ppb(v)	Q
56-23-5	Carbon Tetrachloride	0.2	U
107-06-2	1,2-Dichloroethane	0.2	U
71-43-2	Benzene	0.5	J
540-84-1	Isooctane	0.4	J
142-82-5	Heptane	0.5	J
79-01-6	Trichloroethene	12	
140-88-5	Ethyl Acrylate	0.2	U
78-87-5	1,2-Dichloropropane	0.2	U
80-62-6	Methyl Methacrylate	0.2	U
74-95-3	Dibromomethane	0.2	U
123-91-1	1,4-Dioxane	0.2	U
75-27-4	Bromodichloromethane	0.2	U
10061-01-5	cis-1,3-Dichloropropene	0.2	U
108-10-1	4-Methyl-2-Pentanone	0.5	U
108-88-3	Toluene	8	
111-65-9	Octane	0.4	J
10061-02-6	trans-1,3-Dichloropropene	0.2	U
97-63-2	Ethyl Methacrylate	0.2	U
79-00-5	1,1,2-Trichloroethane	0.2	U
127-18-4	Tetrachloroethene	0.2	U
591-78-6	2-Hexanone	0.5	U
124-48-1	Dibromochloromethane	0.2	U
106-93-4	1,2-Dibromoethane	0.2	U
108-90-7	Chlorobenzene	0.2	U
630-20-6	1,1,1,2-Tetrachloroethane	0.2	U
100-41-4	Ethylbenzene	0.4	J
1330-20-7	m/p-Xylene	1	
95-47-6	o-Xylene	0.5	J
100-42-5	Styrene	0.3	J
75-25-2	Bromoform	0.2	U
98-82-8	Cumene	0.2	U
79-34-5	1,1,2,2-Tetrachloroethane	0.2	U
96-18-4	1,2,3-Trichloropropane	0.2	U
108-86-1	Bromobenzene	0.2	U

U = Compound was undetected at the specified limit of quantitation.
B = Compound was found in method blank. D = analysis of diluted sample.
J = Compound was detected, but below the limit of quantitation.

MEMBER ACIL
Lancaster Laboratories, Inc.
2425 New Holland Pike
PO Box 12425
Lancaster, PA 17605-2425
717-656-2300 Fax: 717-656-2681

Lancaster Laboratories

VOLATILE ORGANICS IN AIR
TEDLAR BAG SAMPLE
ANALYSIS DATA SHEET

Sample No.: BANKI Date Collected: 03/30/04 Date Received: 04/05/04
Lab Sample ID: 4248784 Date Analyzed: 04/10/04 Time Analyzed: 05:25
Injection Volume: 125 cc Nominal Volume: 125 cc Dilution Factor: 1.0
Instrument ID: HP4508 Lab File ID: C:\HPCHEM\1\DATA\APR09\2701022.D

CAS RN	COMPOUND NAME	CONCENTRATION UNITS: MDL ppb(v)	Q
622-96-8	4-Ethyltoluene	0.3	J
108-67-8	1,3,5-Trimethylbenzene	0.2	J
98-83-9	Alpha Methyl Styrene	0.2	U
95-63-6	1,2,4-Trimethylbenzene	0.4	J
541-73-1	1,3-Dichlorobenzene	0.5	U
106-46-7	1,4-Dichlorobenzene	0.5	U
95-50-1	1,2-Dichlorobenzene	0.5	U
67-72-1	Hexachloroethane	0.2	U
120-82-1	1,2,4-Trichlorobenzene	1	U
87-68-3	Hexachlorobutadiene	0.5	U

U = Compound was undetected at the specified limit of quantitation.
B = Compound was found in method blank. D = analysis of diluted sample.
J = Compound was detected, but below the limit of quantitation.

MEMBER ACIL
Lancaster Laboratories, Inc.
2425 New Holland Pike
PO Box 12425
Lancaster, PA 17605-2425
717-656-2300 Fax: 717-656-2681

Analysis Report

Lancaster Laboratories

Lancaster Laboratories Sample No. AQ 4248785

BANK_4_TOTAL-033104 Tedlar Bag Grab Air Sample
Site Code: SC001 RFA #: ET04018
Dayton Thermal/Dayton, OH
Collected:03/31/2004 12:02 by SC

Account Number: 10160

Submitted: 04/05/2004 09:15
Reported: 04/28/2004 at 10:04
Discard: 06/28/2004

DaimlerChrysler Corporation
PO Box 537933
Livonia MI 48153-7933

BANK4 SDG#: DCP54-08

CAT No.	Analysis Name	CAS Number	As Received Result	As Received Method Detection Limit	Units	Dilution Factor

Laboratory Chronicle

CAT No.	Analysis Name	Method	Trial#	Analysis Date and Time	Analyst	Dilution Factor
07869	TO-14A VOA Ext. List Tedlar	EPA Method TO14A	1	04/10/2004 06:07	Roy R Mellott Jr	1
07869	TO-14A VOA Ext. List Tedlar	EPA Method TO14A	1	04/10/2004 08:42	Roy R Mellott Jr	25
07870	TO-14A VOA Ext List cnt Tedlar	EPA Method TO14A	1	04/10/2004 06:07	Roy R Mellott Jr	1

Lancaster Laboratories

VOLATILE ORGANICS IN AIR
TEDLAR BAG SAMPLE
ANALYSIS DATA SHEET

Sample No.: BANK4 Date Collected: 03/30/04 Date Received: 04/05/04
Lab Sample ID: 4248785 Date Analyzed: 04/10/04 Time Analyzed: 06:07
Injection Volume: 125 cc Nominal Volume: 125 cc Dilution Factor: 1.0
Instrument ID: HP4508 Lab File ID: C:\HPCHEM\1\DATA\APR09\2801023.D

CAS RN	COMPOUND NAME	CONCENTRATION UNITS: MDL ppb(v)	Q
115-07-1	Propene	25	
75-71-8	Dichlorodifluoromethane	2	
75-45-6	Chlorodifluoromethane	47	
76-14-2	Freon 114	0.2	U
74-87-3	Chloromethane	0.4	J
75-01-4	Vinyl Chloride	1000	D
106-99-0	1,3-Butadiene	1	U
74-83-9	Bromomethane	0.2	U
75-00-3	Chloroethane	39	
75-43-4	Dichlorofluoromethane	0.3	J
75-69-4	Trichlorofluoromethane	0.7	J
109-66-0	Pentane	2	
107-02-8	Acrolein	3	
75-35-4	1,1-Dichloroethene	16	
76-13-1	Freon 113	5	
67-64-1	Acetone	14	
74-88-4	Methyl Iodide	0.2	U
75-15-0	Carbon Disulfide	8	
75-05-8	Acetonitrile	14	
107-05-1	3-Chloropropene	0.5	U
75-09-2	Methylene Chloride	5	
75-65-0	tert-Butyl Alcohol	1	
107-13-1	Acrylonitrile	0.5	U
156-60-5	trans-1,2-Dichloroethene	11	
1634-04-4	Methyl t-Butyl Ether	0.2	U
110-54-3	Hexane	2	
75-34-3	1,1-Dichloroethane	75	
108-05-4	Vinyl Acetate	0.2	U
156-59-2	cis-1,2-Dichloroethene	530	D
78-93-3	2-Butanone	2	
141-78-6	Ethyl Acetate	0.2	U
96-33-3	Methyl Acrylate	0.2	U
67-66-3	Chloroform	0.3	J
71-55-6	1,1,1-Trichloroethane	79	

U = Compound was undetected at the specified limit of quantitation.
B = Compound was found in method blank. D = analysis of diluted sample.
J = Compound was detected, but below the limit of quantitation.

MEMBER ACIL
Lancaster Laboratories, Inc.
2425 New Holland Pike
PO Box 12425
Lancaster, PA 17605-2425
717-656-2300 Fax: 717-656-2681

Lancaster Laboratories

VOLATILE ORGANICS IN AIR
TEDLAR BAG SAMPLE
ANALYSIS DATA SHEET

Sample No.: BANK4 Date Collected: 03/30/04 Date Received: 04/05/04
Lab Sample ID: 4248785 Date Analyzed: 04/10/04 Time Analyzed: 06:07
Injection Volume: 125 cc Nominal Volume: 125 cc Dilution Factor: 1.0
Instrument ID: HP4508 Lab File ID: C:\HPCHEM\1\DATA\APR09\2801023.D

CAS RN	COMPOUND NAME	CONCENTRATION UNITS: MDL ppb(v)	Q
56-23-5	Carbon Tetrachloride	0.2	U
107-06-2	1,2-Dichloroethane	0.2	U
71-43-2	Benzene	0.7	J
540-84-1	Isooctane	0.3	J
142-82-5	Heptane	0.6	J
79-01-6	Trichloroethene	6	
140-88-5	Ethyl Acrylate	0.2	U
78-87-5	1,2-Dichloropropane	0.2	U
80-62-6	Methyl Methacrylate	0.2	U
74-95-3	Dibromomethane	0.2	U
123-91-1	1,4-Dioxane	0.2	U
75-27-4	Bromodichloromethane	0.2	U
10061-01-5	cis-1,3-Dichloropropene	0.2	U
108-10-1	4-Methyl-2-Pentanone	0.5	J
108-88-3	Toluene	5	
111-65-9	Octane	0.3	J
10061-02-6	trans-1,3-Dichloropropene	0.2	U
97-63-2	Ethyl Methacrylate	0.2	U
79-00-5	1,1,2-Trichloroethane	0.2	U
127-18-4	Tetrachloroethene	0.2	J
591-78-6	2-Hexanone	0.5	U
124-48-1	Dibromochloromethane	0.2	U
106-93-4	1,2-Dibromoethane	0.2	U
108-90-7	Chlorobenzene	0.2	U
630-20-6	1,1,1,2-Tetrachloroethane	0.2	U
100-41-4	Ethylbenzene	0.3	J
1330-20-7	m/p-Xylene	0.9	J
95-47-6	o-Xylene	0.3	J
100-42-5	Styrene	0.2	U
75-25-2	Bromoform	0.2	U
98-82-8	Cumene	0.2	U
79-34-5	1,1,2,2-Tetrachloroethane	0.2	U
96-18-4	1,2,3-Trichloropropane	0.2	U
108-86-1	Bromobenzene	0.2	U

U = Compound was undetected at the specified limit of quantitation.
B = Compound was found in method blank. D = analysis of diluted sample.
J = Compound was detected, but below the limit of quantitation.

MEMBER ACIL
Lancaster Laboratories, Inc.
2425 New Holland Pike
PO Box 12425
Lancaster, PA 17605-2425
717-656-2300 Fax: 717-656-2681

Lancaster Laboratories

VOLATILE ORGANICS IN AIR
TEDLAR BAG SAMPLE
ANALYSIS DATA SHEET

Sample No.: BANK4 Date Collected: 03/30/04 Date Received: 04/05/04
Lab Sample ID: 4248785 Date Analyzed: 04/10/04 Time Analyzed: 06:07
Injection Volume: 125 cc Nominal Volume: 125 cc Dilution Factor: 1.0
Instrument ID: HP4508 Lab File ID: C:\HPCHEM\1\DATA\APR09\2801023.D

CAS RN	COMPOUND NAME	CONCENTRATION UNITS: MDL ppb(v)	Q
622-96-8	4-Ethyltoluene	0.2	J
108-67-8	1,3,5-Trimethylbenzene	0.2	U
98-83-9	Alpha Methyl Styrene	0.2	U
95-63-6	1,2,4-Trimethylbenzene	0.4	J
541-73-1	1,3-Dichlorobenzene	0.5	U
106-46-7	1,4-Dichlorobenzene	0.5	U
95-50-1	1,2-Dichlorobenzene	0.5	U
67-72-1	Hexachloroethane	0.2	U
120-82-1	1,2,4-Trichlorobenzene	1	U
87-68-3	Hexachlorobutadiene	0.5	U

U = Compound was undetected at the specified limit of quantitation.
B = Compound was found in method blank. D = analysis of diluted sample.
J = Compound was detected, but below the limit of quantitation.

MEMBER ACIL
Lancaster Laboratories, Inc.
2425 New Holland Pike
PO Box 12425
Lancaster, PA 17605-2425
717-656-2300 Fax: 717-656-2681

Lancaster Laboratories

Lancaster Laboratories Sample No. AQ 4248786

BANK_6_TOTAL-033104 Tedlar Bag Grab Air Sample
Site Code: SC001 RFA #: ET04018
Dayton Thermal/Dayton, OH
Collected:03/31/2004 15:14 by SC

Account Number: 10160

Submitted: 04/05/2004 09:15
Reported: 04/28/2004 at 10:04
Discard: 06/28/2004

DaimlerChrysler Corporation
PO Box 537933
Livonia MI 48153-7933

BANK6 SDG#: DCP54-09

CAT No.	Analysis Name	CAS Number	As Received Result	As Received Method Detection Limit	Units	Dilution Factor

Laboratory Chronicle

CAT No.	Analysis Name	Method	Trial#	Analysis Date and Time	Analyst	Dilution Factor
07869	TO-14A VOA Ext. List Tedlar	EPA Method TO14A	1	04/10/2004 06:50	Roy R Mellott Jr	1
07870	TO-14A VOA Ext List cnt Tedlar	EPA Method TO14A	1	04/10/2004 06:50	Roy R Mellott Jr	1

Lancaster Laboratories

VOLATILE ORGANICS IN AIR
SUMMA CANISTER SAMPLE
ANALYSIS DATA SHEET

Sample No.: BANK6 | Date Collected: 03/30/04 | Date Received: 04/05/04
Lab Sample ID: 4248786 | Date Analyzed: 04/10/04 | Time Analyzed: 06:50
Canister ID: SUMMA | Pressure Rec'd: 14.7 psia | Final Pressure: 14.7 psia
Injection Volume: 125 cc | Nominal Volume: 125 cc | Dilution Factor: 1.0
Instrument ID: HP4508 | Lab File ID: C:\HPCHEM\1\DATA\APR09\2901024.D

CAS RN	COMPOUND NAME	CONCENTRATION UNITS: MDL ppb(v)	Q
115-07-1	Propene	5	
75-71-8	Dichlorodifluoromethane	2	
75-45-6	Chlorodifluoromethane	2	
76-14-2	Freon 114	0.2	U
74-87-3	Chloromethane	0.2	J
75-01-4	Vinyl Chloride	9	
106-99-0	1,3-Butadiene	1	U
74-83-9	Bromomethane	0.2	U
75-00-3	Chloroethane	2	
75-43-4	Dichlorofluoromethane	0.3	J
75-69-4	Trichlorofluoromethane	1	
109-66-0	Pentane	1	
107-02-8	Acrolein	2	
75-35-4	1,1-Dichloroethene	3	
76-13-1	Freon 113	6	
67-64-1	Acetone	11	
74-88-4	Methyl Iodide	0.2	U
75-15-0	Carbon Disulfide	7	
75-05-8	Acetonitrile	8	
107-05-1	3-Chloropropene	0.5	U
75-09-2	Methylene Chloride	4	
75-65-0	tert-Butyl Alcohol	1	J
107-13-1	Acrylonitrile	0.5	U
156-60-5	trans-1,2-Dichloroethene	3	
1634-04-4	Methyl t-Butyl Ether	0.2	U
110-54-3	Hexane	1	
75-34-3	1,1-Dichloroethane	28	
108-05-4	Vinyl Acetate	0.2	U
156-59-2	cis-1,2-Dichloroethene	59	
78-93-3	2-Butanone	2	
141-78-6	Ethyl Acetate	0.2	U
96-33-3	Methyl Acrylate	0.2	U
67-66-3	Chloroform	0.3	J
71-55-6	1,1,1-Trichloroethane	60	

U = Compound was undetected at the specified limit of quantitation.
B = Compound was found in method blank. D = analysis of diluted sample.
J = Compound was detected, but below the limit of quantitation.

MEMBER ACIL
Lancaster Laboratories, Inc.
2425 New Holland Pike
PO Box 12425
Lancaster, PA 17605-2425
717-656-2300 Fax: 717-656-2681

Lancaster Laboratories

VOLATILE ORGANICS IN AIR
SUMMA CANISTER SAMPLE
ANALYSIS DATA SHEET

Sample No.: BANK6 Date Collected: 03/30/04 Date Received: 04/05/04
Lab Sample ID: 4248786 Date Analyzed: 04/10/04 Time Analyzed: 06:50
Canister ID: SUMMA Pressure Rec'd: 14.7 psia Final Pressure: 14.7 psia
Injection Volume: 125 cc Nominal Volume: 125 cc Dilution Factor: 1.0
Instrument ID: HP4508 Lab File ID: C:\HPCHEM\1\DATA\APR09\2901024.D

CAS RN	COMPOUND NAME	CONCENTRATION UNITS: MDL ppb(v)	Q
56-23-5	Carbon Tetrachloride	0.2	U
107-06-2	1,2-Dichloroethane	0.2	U
71-43-2	Benzene	0.7	J
540-84-1	Isooctane	0.3	J
142-82-5	Heptane	0.6	J
79-01-6	Trichloroethene	9	
140-88-5	Ethyl Acrylate	0.2	U
78-87-5	1,2-Dichloropropane	0.2	U
80-62-6	Methyl Methacrylate	0.2	U
74-95-3	Dibromomethane	0.2	U
123-91-1	1,4-Dioxane	0.2	U
75-27-4	Bromodichloromethane	0.2	U
10061-01-5	cis-1,3-Dichloropropene	0.2	U
108-10-1	4-Methyl-2-Pentanone	0.5	U
108-88-3	Toluene	7	
111-65-9	Octane	0.3	J
10061-02-6	trans-1,3-Dichloropropene	0.2	U
97-63-2	Ethyl Methacrylate	0.2	U
79-00-5	1,1,2-Trichloroethane	0.2	U
127-18-4	Tetrachloroethene	0.6	J
591-78-6	2-Hexanone	0.5	U
124-48-1	Dibromochloromethane	0.2	U
106-93-4	1,2-Dibromoethane	0.2	U
108-90-7	Chlorobenzene	0.2	U
630-20-6	1,1,1,2-Tetrachloroethane	0.2	U
100-41-4	Ethylbenzene	0.4	J
1330-20-7	m/p-Xylene	1	
95-47-6	o-Xylene	0.4	J
100-42-5	Styrene	0.3	J
75-25-2	Bromoform	0.2	U
98-82-8	Cumene	0.2	U
79-34-5	1,1,2,2-Tetrachloroethane	0.2	U
96-18-4	1,2,3-Trichloropropane	0.2	U
108-86-1	Bromobenzene	0.2	U

U = Compound was undetected at the specified limit of quantitation.
B = Compound was found in method blank. D = analysis of diluted sample.
J = Compound was detected, but below the limit of quantitation.

MEMBER ACIL
Lancaster Laboratories, Inc.
2425 New Holland Pike
PO Box 12425
Lancaster, PA 17605-2425
717-656-2300 Fax: 717-656-2681

Lancaster Laboratories

VOLATILE ORGANICS IN AIR
SUMMA CANISTER SAMPLE
ANALYSIS DATA SHEET

Sample No.: BANK6 Date Collected: 03/30/04 Date Received: 04/05/04
Lab Sample ID: 4248786 Date Analyzed: 04/10/04 Time Analyzed: 06:50
Canister ID: SUMMA Pressure Rec'd: 14.7 psia Final Pressure: 14.7 psia
Injection Volume: 125 cc Nominal Volume: 125 cc Dilution Factor: 1.0
Instrument ID: HP4508 Lab File ID: C:\HPCHEM\1\DATA\APR09\2901024.D

CAS RN	COMPOUND NAME	CONCENTRATION UNITS: MDL ppb(v)	Q
622-96-8	4-Ethyltoluene	0.3	J
108-67-8	1,3,5-Trimethylbenzene	0.2	U
98-83-9	Alpha Methyl Styrene	0.2	U
95-63-6	1,2,4-Trimethylbenzene	0.4	J
541-73-1	1,3-Dichlorobenzene	0.5	U
106-46-7	1,4-Dichlorobenzene	0.5	U
95-50-1	1,2-Dichlorobenzene	0.5	U
67-72-1	Hexachloroethane	0.2	U
120-82-1	1,2,4-Trichlorobenzene	1	U
87-68-3	Hexachlorobutadiene	0.5	U

U = Compound was undetected at the specified limit of quantitation.
B = Compound was found in method blank. D = analysis of diluted sample.
J = Compound was detected, but below the limit of quantitation.

MEMBER ACIL
Lancaster Laboratories, Inc.
2425 New Holland Pike
PO Box 12425
Lancaster, PA 17605-2425
717-656-2300 Fax: 717-656-2681

Analysis Report

Lancaster Laboratories

Lancaster Laboratories Sample No. AQ 4248787

BANK_5_TOTAL-033104 Tedlar Bag Grab Air Sample
Site Code: SC001 RFA #: ET04018
Dayton Thermal/Dayton, OH
Collected:03/31/2004 16:52 by SC

Account Number: 10160

Submitted: 04/05/2004 09:15
Reported: 04/28/2004 at 10:04
Discard: 06/28/2004

DaimlerChrysler Corporation
PO Box 537933
Livonia MI 48153-7933

BANK5 SDG#: DCP54-10

CAT No.	Analysis Name	CAS Number	As Received Result	As Received Method Detection Limit	Units	Dilution Factor

Laboratory Chronicle

CAT No.	Analysis Name	Method	Trial#	Analysis Date and Time	Analyst	Dilution Factor
07869	TO-14A VOA Ext. List Tedlar	EPA Method TO14A	1	04/10/2004 07:33	Roy R Mellott Jr	1
07870	TO-14A VOA Ext List cnt Tedlar	EPA Method TO14A	1	04/10/2004 07:33	Roy R Mellott Jr	1

Lancaster Laboratories

VOLATILE ORGANICS IN AIR
SUMMA CANISTER SAMPLE
ANALYSIS DATA SHEET

Sample No.: BANK5 Date Collected: 03/30/04 Date Received: 04/05/04
Lab Sample ID: 4248787 Date Analyzed: 04/10/04 Time Analyzed: 07:33
Canister ID: SUMMA Pressure Rec'd: 14.7 psia Final Pressure: 14.7 psia
Injection Volume: 125 cc Nominal Volume: 125 cc Dilution Factor: 1.0
Instrument ID: HP4508 Lab File ID: C:\HPCHEM\1\DATA\APR09\3001025.D

CAS RN	COMPOUND NAME	CONCENTRATION UNITS: MDL ppb(v)	Q
115-07-1	Propene	0.9	J
75-71-8	Dichlorodifluoromethane	2	
75-45-6	Chlorodifluoromethane	5	
76-14-2	Freon 114	0.2	U
74-87-3	Chloromethane	0.2	U
75-01-4	Vinyl Chloride	4	
106-99-0	1,3-Butadiene	1	U
74-83-9	Bromomethane	0.2	U
75-00-3	Chloroethane	68	
75-43-4	Dichlorofluoromethane	0.2	U
75-69-4	Trichlorofluoromethane	0.6	J
109-66-0	Pentane	1	J
107-02-8	Acrolein	2	
75-35-4	1,1-Dichloroethene	56	
76-13-1	Freon 113	25	
67-64-1	Acetone	9	
74-88-4	Methyl Iodide	0.2	U
75-15-0	Carbon Disulfide	7	
75-05-8	Acetonitrile	6	
107-05-1	3-Chloropropene	0.5	U
75-09-2	Methylene Chloride	4	
75-65-0	tert-Butyl Alcohol	0.8	J
107-13-1	Acrylonitrile	0.5	U
156-60-5	trans-1,2-Dichloroethene	2	
1634-04-4	Methyl t-Butyl Ether	0.2	U
110-54-3	Hexane	0.8	J
75-34-3	1,1-Dichloroethane	45	
108-05-4	Vinyl Acetate	0.2	U
156-59-2	cis-1,2-Dichloroethene	36	
78-93-3	2-Butanone	1	
141-78-6	Ethyl Acetate	0.2	U
96-33-3	Methyl Acrylate	0.2	U
67-66-3	Chloroform	0.2	U
71-55-6	1,1,1-Trichloroethane	57	

U = Compound was undetected at the specified limit of quantitation.
B = Compound was found in method blank. D = analysis of diluted sample.
J = Compound was detected, but below the limit of quantitation.

MEMBER ACIL
Lancaster Laboratories, Inc.
2425 New Holland Pike
PO Box 12425
Lancaster, PA 17605-2425
717-656-2300 Fax: 717-656-2681

Lancaster Laboratories

VOLATILE ORGANICS IN AIR
SUMMA CANISTER SAMPLE
ANALYSIS DATA SHEET

Sample No.: BANK5 Date Collected: 03/30/04 Date Received: 04/05/04
Lab Sample ID: 4248787 Date Analyzed: 04/10/04 Time Analyzed: 07:33
Canister ID: SUMMA Pressure Rec'd: 14.7 psia Final Pressure: 14.7 psia
Injection Volume: 125 cc Nominal Volume: 125 cc Dilution Factor: 1.0
Instrument ID: HP4508 Lab File ID: C:\HPCHEM\1\DATA\APR09\3001025.D

CAS RN	COMPOUND NAME	CONCENTRATION UNITS: MDL ppb(v)	Q
56-23-5	Carbon Tetrachloride	0.2	U
107-06-2	1,2-Dichloroethane	0.2	U
71-43-2	Benzene	0.6	J
540-84-1	Isooctane	0.2	J
142-82-5	Heptane	0.5	J
79-01-6	Trichloroethene	6	
140-88-5	Ethyl Acrylate	0.2	U
78-87-5	1,2-Dichloropropane	0.2	U
80-62-6	Methyl Methacrylate	0.2	U
74-95-3	Dibromomethane	0.2	U
123-91-1	1,4-Dioxane	0.2	U
75-27-4	Bromodichloromethane	0.2	U
10061-01-5	cis-1,3-Dichloropropene	0.2	U
108-10-1	4-Methyl-2-Pentanone	0.5	U
108-88-3	Toluene	5	
111-65-9	Octane	0.2	J
10061-02-6	trans-1,3-Dichloropropene	0.2	U
97-63-2	Ethyl Methacrylate	0.2	U
79-00-5	1,1,2-Trichloroethane	0.2	U
127-18-4	Tetrachloroethene	0.5	J
591-78-6	2-Hexanone	0.5	U
124-48-1	Dibromochloromethane	0.2	U
106-93-4	1,2-Dibromoethane	0.2	U
108-90-7	Chlorobenzene	0.2	U
630-20-6	1,1,1,2-Tetrachloroethane	0.2	U
100-41-4	Ethylbenzene	0.3	J
1330-20-7	m/p-Xylene	0.7	J
95-47-6	o-Xylene	0.3	J
100-42-5	Styrene	0.2	U
75-25-2	Bromoform	0.2	U
98-82-8	Cumene	0.2	U
79-34-5	1,1,2,2-Tetrachloroethane	0.2	U
96-18-4	1,2,3-Trichloropropane	0.2	U
108-86-1	Bromobenzene	0.2	U

U = Compound was undetected at the specified limit of quantitation.
B = Compound was found in method blank. D = analysis of diluted sample.
J = Compound was detected, but below the limit of quantitation.

MEMBER ACIL
Lancaster Laboratories, Inc.
2425 New Holland Pike
PO Box 12425
Lancaster, PA 17605-2425
717-656-2300 Fax: 717-656-2681

Lancaster Laboratories

VOLATILE ORGANICS IN AIR
SUMMA CANISTER SAMPLE
ANALYSIS DATA SHEET

Sample No.: BANK5 Date Collected: 03/30/04 Date Received: 04/05/04
Lab Sample ID: 4248787 Date Analyzed: 04/10/04 Time Analyzed: 07:33
Canister ID: SUMMA Pressure Rec'd: 14.7 psia Final Pressure: 14.7 psia
Injection Volume: 125 cc Nominal Volume: 125 cc Dilution Factor: 1.0
Instrument ID: HP4508 Lab File ID: C:\HPCHEM\1\DATA\APR09\3001025.D

CAS RN	COMPOUND NAME	CONCENTRATION UNITS: MDL ppb(v)	Q
622-96-8	4-Ethyltoluene	0.2	U
108-67-8	1,3,5-Trimethylbenzene	0.2	U
98-83-9	Alpha Methyl Styrene	0.2	U
95-63-6	1,2,4-Trimethylbenzene	0.3	J
541-73-1	1,3-Dichlorobenzene	0.5	U
106-46-7	1,4-Dichlorobenzene	0.5	U
95-50-1	1,2-Dichlorobenzene	0.5	U
67-72-1	Hexachloroethane	0.2	U
120-82-1	1,2,4-Trichlorobenzene	1	U
87-68-3	Hexachlorobutadiene	0.5	U

U = Compound was undetected at the specified limit of quantitation.
B = Compound was found in method blank. D = analysis of diluted sample.
J = Compound was detected, but below the limit of quantitation.

MEMBER ACIL
Lancaster Laboratories, Inc.
2425 New Holland Pike
PO Box 12425
Lancaster, PA 17605-2425
717-656-2300 Fax: 717-656-2681

Analysis Report

Lancaster Laboratories

Lancaster Laboratories Sample No. AQ 4248788

BANK_C_TOTAL-040104 Tedlar Bag Grab Air Sample
Site Code: SC001 RFA #: ET04018
Dayton Thermal/Dayton, OH
Collected:04/01/2004 09:36 by SC

Account Number: 10160

Submitted: 04/05/2004 09:15
Reported: 04/28/2004 at 10:04
Discard: 06/28/2004

DaimlerChrysler Corporation
PO Box 537933
Livonia MI 48153-7933

BANKC SDG#: DCP54-11

CAT No.	Analysis Name	CAS Number	As Received Result	As Received Method Detection Limit	Units	Dilution Factor

Laboratory Chronicle

CAT No.	Analysis Name	Method	Trial#	Analysis Date and Time	Analyst	Dilution Factor
07869	TO-14A VOA Ext. List Tedlar	EPA Method TO14A	1	04/10/2004 15:30	Roy R Mellott Jr	1
07869	TO-14A VOA Ext. List Tedlar	EPA Method TO14A	1	04/11/2004 00:32	Roy R Mellott Jr	5
07870	TO-14A VOA Ext List cnt Tedlar	EPA Method TO14A	1	04/10/2004 15:30	Roy R Mellott Jr	1

Lancaster Laboratories

VOLATILE ORGANICS IN AIR
SUMMA CANISTER SAMPLE
ANALYSIS DATA SHEET

Sample No.: BANKC
Lab Sample ID: 4248788
Canister ID: SUMMA
Injection Volume: 125 cc
Instrument ID: HP4508

Date Collected: 03/30/04
Date Analyzed: 04/10/04
Pressure Rec'd: 14.7 psia
Nominal Volume: 125 cc
Lab File ID: C:\HPCHEM\1\DATA\APR10\1401006.D

Date Received: 04/05/04
Time Analyzed: 15:30
Final Pressure: 14.7 psia
Dilution Factor: 1.0

CAS RN	COMPOUND NAME	CONCENTRATION UNITS: MDL ppb(v)	Q
115-07-1	Propene	43	
75-71-8	Dichlorodifluoromethane	2	
75-45-6	Chlorodifluoromethane	19	
76-14-2	Freon 114	0.2	U
74-87-3	Chloromethane	0.6	J
75-01-4	Vinyl Chloride	300	D
106-99-0	1,3-Butadiene	1	U
74-83-9	Bromomethane	0.2	U
75-00-3	Chloroethane	62	
75-43-4	Dichlorofluoromethane	0.2	U
75-69-4	Trichlorofluoromethane	0.4	J
109-66-0	Pentane	9	
107-02-8	Acrolein	4	
75-35-4	1,1-Dichloroethene	6	
76-13-1	Freon 113	11	
67-64-1	Acetone	27	
74-88-4	Methyl Iodide	0.2	U
75-15-0	Carbon Disulfide	8	
75-05-8	Acetonitrile	19	
107-05-1	3-Chloropropene	0.5	U
75-09-2	Methylene Chloride	5	
75-65-0	tert-Butyl Alcohol	2	
107-13-1	Acrylonitrile	0.5	U
156-60-5	trans-1,2-Dichloroethene	2	
1634-04-4	Methyl t-Butyl Ether	0.2	U
110-54-3	Hexane	4	
75-34-3	1,1-Dichloroethane	46	
108-05-4	Vinyl Acetate	0.2	U
156-59-2	cis-1,2-Dichloroethene	40	
78-93-3	2-Butanone	28	
141-78-6	Ethyl Acetate	0.2	U
96-33-3	Methyl Acrylate	0.2	U
67-66-3	Chloroform	3	
71-55-6	1,1,1-Trichloroethane	56	

U = Compound was undetected at the specified limit of quantitation.
B = Compound was found in method blank. D = analysis of diluted sample.
J = Compound was detected, but below the limit of quantitation.

MEMBER ACIL
Lancaster Laboratories, Inc.
2425 New Holland Pike
PO Box 12425
Lancaster, PA 17605-2425
717-656-2300 Fax: 717-656-2681

Lancaster Laboratories

VOLATILE ORGANICS IN AIR
SUMMA CANISTER SAMPLE
ANALYSIS DATA SHEET

Sample No.: BANKC
Lab Sample ID: 4248788
Canister ID: SUMMA
Injection Volume: 125 cc
Instrument ID: HP4508

Date Collected: 03/30/04
Date Analyzed: 04/10/04
Pressure Rec'd: 14.7 psia
Nominal Volume: 125 cc
Lab File ID: C:\HPCHEM\1\DATA\APR10\1401006.D

Date Received: 04/05/04
Time Analyzed: 15:30
Final Pressure: 14.7 psia
Dilution Factor: 1.0

CAS RN	COMPOUND NAME	CONCENTRATION UNITS: MDL ppb(v)	Q
56-23-5	Carbon Tetrachloride	0.2	U
107-06-2	1,2-Dichloroethane	0.2	U
71-43-2	Benzene	2	
540-84-1	Isooctane	0.4	J
142-82-5	Heptane	0.8	J
79-01-6	Trichloroethene	27	
140-88-5	Ethyl Acrylate	0.2	U
78-87-5	1,2-Dichloropropane	0.2	U
80-62-6	Methyl Methacrylate	0.2	U
74-95-3	Dibromomethane	0.2	U
123-91-1	1,4-Dioxane	0.2	U
75-27-4	Bromodichloromethane	0.2	U
10061-01-5	cis-1,3-Dichloropropene	0.2	U
108-10-1	4-Methyl-2-Pentanone	0.6	J
108-88-3	Toluene	6	
111-65-9	Octane	0.6	J
10061-02-6	trans-1,3-Dichloropropene	0.2	U
97-63-2	Ethyl Methacrylate	0.2	U
79-00-5	1,1,2-Trichloroethane	0.2	U
127-18-4	Tetrachloroethene	6	
591-78-6	2-Hexanone	0.5	U
124-48-1	Dibromochloromethane	0.2	U
106-93-4	1,2-Dibromoethane	0.2	U
108-90-7	Chlorobenzene	0.2	U
630-20-6	1,1,1,2-Tetrachloroethane	0.2	U
100-41-4	Ethylbenzene	1	
1330-20-7	m/p-Xylene	3	
95-47-6	o-Xylene	1	
100-42-5	Styrene	0.9	J
75-25-2	Bromoform	0.2	U
98-82-8	Cumene	0.2	U
79-34-5	1,1,2,2-Tetrachloroethane	0.2	U
96-18-4	1,2,3-Trichloropropane	0.2	U
108-86-1	Bromobenzene	0.2	U

U = Compound was undetected at the specified limit of quantitation.
B = Compound was found in method blank. D = analysis of diluted sample.
J = Compound was detected, but below the limit of quantitation.

Lancaster Laboratories

VOLATILE ORGANICS IN AIR
SUMMA CANISTER SAMPLE
ANALYSIS DATA SHEET

Sample No.: BANKC
Lab Sample ID: 4248788
Canister ID: SUMMA
Injection Volume: 125 cc
Instrument ID: HP4508

Date Collected: 03/30/04
Date Analyzed: 04/10/04
Pressure Rec'd: 14.7 psia
Nominal Volume: 125 cc
Lab File ID: C:\HPCHEM\1\DATA\APR10\1401006.D

Date Received: 04/05/04
Time Analyzed: 15:30
Final Pressure: 14.7 psia
Dilution Factor: 1.0

CAS RN	COMPOUND NAME	CONCENTRATION UNITS: MDL ppb(v)	Q
622-96-8	4-Ethyltoluene	0.4	J
108-67-8	1,3,5-Trimethylbenzene	0.3	J
98-83-9	Alpha Methyl Styrene	0.2	U
95-63-6	1,2,4-Trimethylbenzene	0.5	J
541-73-1	1,3-Dichlorobenzene	0.5	U
106-46-7	1,4-Dichlorobenzene	0.5	U
95-50-1	1,2-Dichlorobenzene	0.5	U
67-72-1	Hexachloroethane	0.2	U
120-82-1	1,2,4-Trichlorobenzene	1	U
87-68-3	Hexachlorobutadiene	0.5	U

U = Compound was undetected at the specified limit of quantitation.
B = Compound was found in method blank. D = analysis of diluted sample.
J = Compound was detected, but below the limit of quantitation.

MEMBER ACIL
Lancaster Laboratories, Inc.
2425 New Holland Pike
PO Box 12425
Lancaster, PA 17605-2425
717-656-2300 Fax: 717-656-2681

Analysis Report

Lancaster Laboratories

Lancaster Laboratories Sample No. AQ 4248789

BANK_1_TOTAL-040104 Tedlar Bag Grab Air Sample
Site Code: SC001 RFA #: ET04018
Dayton Thermal/Dayton, OH
Collected:04/01/2004 11:25 by SC

Account Number: 10160

Submitted: 04/05/2004 09:15
Reported: 04/28/2004 at 10:04
Discard: 06/28/2004

DaimlerChrysler Corporation
PO Box 537933
Livonia MI 48153-7933

BANK1 SDG#: DCP54-12

CAT No.	Analysis Name	CAS Number	As Received Result	As Received Method Detection Limit	Units	Dilution Factor

Laboratory Chronicle

CAT No.	Analysis Name	Method	Trial#	Analysis Date and Time	Analyst	Dilution Factor
07869	TO-14A VOA Ext. List Tedlar	EPA Method TO14A	1	04/10/2004 16:12	Roy R Mellott Jr	1
07870	TO-14A VOA Ext List cnt Tedlar	EPA Method TO14A	1	04/10/2004 16:12	Roy R Mellott Jr	1

Lancaster Laboratories

VOLATILE ORGANICS IN AIR
SUMMA CANISTER SAMPLE
ANALYSIS DATA SHEET

Sample No.: BANK1 Date Collected: 03/30/04 Date Received: 04/05/04
Lab Sample ID: 4248789 Date Analyzed: 04/10/04 Time Analyzed: 16:12
Canister ID: SUMMA Pressure Rec'd: 14.7 psia Final Pressure: 14.7 psia
Injection Volume: 125 cc Nominal Volume: 125 cc Dilution Factor: 1.0
Instrument ID: HP4508 Lab File ID: C:\HPCHEM\1\DATA\APR10\1501007.D

CAS RN	COMPOUND NAME	CONCENTRATION UNITS: MDL ppb(v)	Q
115-07-1	Propene	3	
75-71-8	Dichlorodifluoromethane	1	
75-45-6	Chlorodifluoromethane	3	
76-14-2	Freon 114	0.2	U
74-87-3	Chloromethane	0.2	U
75-01-4	Vinyl Chloride	3	
106-99-0	1,3-Butadiene	1	U
74-83-9	Bromomethane	0.2	U
75-00-3	Chloroethane	32	
75-43-4	Dichlorofluoromethane	0.2	U
75-69-4	Trichlorofluoromethane	0.4	J
109-66-0	Pentane	1	
107-02-8	Acrolein	3	
75-35-4	1,1-Dichloroethene	39	
76-13-1	Freon 113	8	
67-64-1	Acetone	16	
74-88-4	Methyl Iodide	0.2	U
75-15-0	Carbon Disulfide	7	
75-05-8	Acetonitrile	10	
107-05-1	3-Chloropropene	0.5	U
75-09-2	Methylene Chloride	4	
75-65-0	tert-Butyl Alcohol	0.9	J
107-13-1	Acrylonitrile	0.5	U
156-60-5	trans-1,2-Dichloroethene	2	
1634-04-4	Methyl t-Butyl Ether	0.2	U
110-54-3	Hexane	1	
75-34-3	1,1-Dichloroethane	28	
108-05-4	Vinyl Acetate	0.2	U
156-59-2	cis-1,2-Dichloroethene	45	
78-93-3	2-Butanone	9	
141-78-6	Ethyl Acetate	0.2	U
96-33-3	Methyl Acrylate	0.2	U
67-66-3	Chloroform	0.3	J
71-55-6	1,1,1-Trichloroethane	96	

U = Compound was undetected at the specified limit of quantitation.
B = Compound was found in method blank. D = analysis of diluted sample.
J = Compound was detected, but below the limit of quantitation.

MEMBER ACIL
Lancaster Laboratories, Inc.
2425 New Holland Pike
PO Box 12425
Lancaster, PA 17605-2425
717-656-2300 Fax: 717-656-2681

Lancaster Laboratories

VOLATILE ORGANICS IN AIR
SUMMA CANISTER SAMPLE
ANALYSIS DATA SHEET

Sample No.: BANK1 Date Collected: 03/30/04 Date Received: 04/05/04
Lab Sample ID: 4248789 Date Analyzed: 04/10/04 Time Analyzed: 16:12
Canister ID: SUMMA Pressure Rec'd: 14.7 psia Final Pressure: 14.7 psia
Injection Volume: 125 cc Nominal Volume: 125 cc Dilution Factor: 1.0
Instrument ID: HP4508 Lab File ID: C:\HPCHEM\1\DATA\APR10\1501007.D

CAS RN	COMPOUND NAME	CONCENTRATION UNITS: MDL ppb(v)	Q
56-23-5	Carbon Tetrachloride	0.2	U
107-06-2	1,2-Dichloroethane	0.2	U
71-43-2	Benzene	1	J
540-84-1	Isooctane	0.3	J
142-82-5	Heptane	0.5	J
79-01-6	Trichloroethene	9	
140-88-5	Ethyl Acrylate	0.2	U
78-87-5	1,2-Dichloropropane	0.2	U
80-62-6	Methyl Methacrylate	0.2	U
74-95-3	Dibromomethane	0.2	U
123-91-1	1,4-Dioxane	0.2	U
75-27-4	Bromodichloromethane	0.2	U
10061-01-5	cis-1,3-Dichloropropene	0.2	U
108-10-1	4-Methyl-2-Pentanone	0.5	J
108-88-3	Toluene	6	
111-65-9	Octane	0.5	J
10061-02-6	trans-1,3-Dichloropropene	0.2	U
97-63-2	Ethyl Methacrylate	0.2	U
79-00-5	1,1,2-Trichloroethane	0.2	U
127-18-4	Tetrachloroethene	3	
591-78-6	2-Hexanone	0.5	U
124-48-1	Dibromochloromethane	0.2	U
106-93-4	1,2-Dibromoethane	0.2	U
108-90-7	Chlorobenzene	0.2	U
630-20-6	1,1,1,2-Tetrachloroethane	0.2	U
100-41-4	Ethylbenzene	0.7	J
1330-20-7	m/p-Xylene	2	
95-47-6	o-Xylene	0.7	J
100-42-5	Styrene	0.5	J
75-25-2	Bromoform	0.2	U
98-82-8	Cumene	0.2	U
79-34-5	1,1,2,2-Tetrachloroethane	0.2	U
96-18-4	1,2,3-Trichloropropane	0.2	U
108-86-1	Bromobenzene	0.2	U

U = Compound was undetected at the specified limit of quantitation.
B = Compound was found in method blank. D = analysis of diluted sample.
J = Compound was detected, but below the limit of quantitation.

MEMBER ACIL
Lancaster Laboratories, Inc.
2425 New Holland Pike
PO Box 12425
Lancaster, PA 17605-2425
717-656-2300 Fax: 717-656-2681

Lancaster Laboratories

VOLATILE ORGANICS IN AIR
SUMMA CANISTER SAMPLE
ANALYSIS DATA SHEET

Sample No.: BANK1 Date Collected: 03/30/04 Date Received: 04/05/04
Lab Sample ID: 4248789 Date Analyzed: 04/10/04 Time Analyzed: 16:12
Canister ID: SUMMA Pressure Rec'd: 14.7 psia Final Pressure: 14.7 psia
Injection Volume: 125 cc Nominal Volume: 125 cc Dilution Factor: 1.0
Instrument ID: HP4508 Lab File ID: C:\HPCHEM\1\DATA\APR10\1501007.D

CAS RN	COMPOUND NAME	CONCENTRATION UNITS: MDL ppb(v)	Q
622-96-8	4-Ethyltoluene	0.2	U
108-67-8	1,3,5-Trimethylbenzene	0.2	U
98-83-9	Alpha Methyl Styrene	0.2	U
95-63-6	1,2,4-Trimethylbenzene	0.3	J
541-73-1	1,3-Dichlorobenzene	0.5	U
106-46-7	1,4-Dichlorobenzene	0.5	U
95-50-1	1,2-Dichlorobenzene	0.5	U
67-72-1	Hexachloroethane	0.2	U
120-82-1	1,2,4-Trichlorobenzene	1	U
87-68-3	Hexachlorobutadiene	0.5	U

U = Compound was undetected at the specified limit of quantitation.
B = Compound was found in method blank. D = analysis of diluted sample.
J = Compound was detected, but below the limit of quantitation.

MEMBER ACIL
Lancaster Laboratories, Inc.
2425 New Holland Pike
PO Box 12425
Lancaster, PA 17605-2425
717-656-2300 Fax: 717-656-2681

Analysis Report

Lancaster Laboratories

Lancaster Laboratories Sample No. AQ 4248790

BANK_2_TOTAL-040104 Tedlar Bag Grab Air Sample
Site Code: SC001 RFA #: ET04018
Dayton Thermal/Dayton, OH
Collected:04/01/2004 15:22 by SC

Account Number: 10160

Submitted: 04/05/2004 09:15
Reported: 04/28/2004 at 10:04
Discard: 06/28/2004

DaimlerChrysler Corporation
PO Box 537933
Livonia MI 48153-7933

BANK2 SDG#: DCP54-13

CAT No.	Analysis Name	CAS Number	As Received Result	As Received Method Detection Limit	Units	Dilution Factor

Laboratory Chronicle

CAT No.	Analysis Name	Method	Trial#	Analysis Date and Time	Analyst	Dilution Factor
07869	TO-14A VOA Ext. List Tedlar	EPA Method TO14A	1	04/10/2004 16:55	Roy R Mellott Jr	1
07870	TO-14A VOA Ext List cnt Tedlar	EPA Method TO14A	1	04/10/2004 16:55	Roy R Mellott Jr	1

Lancaster Laboratories

VOLATILE ORGANICS IN AIR
SUMMA CANISTER SAMPLE
ANALYSIS DATA SHEET

Sample No.: BANK2 Date Collected: 03/30/04 Date Received: 04/05/04
Lab Sample ID: 4248790 Date Analyzed: 04/10/04 Time Analyzed: 16:55
Canister ID: SUMMA Pressure Rec'd: 14.7 psia Final Pressure: 14.7 psia
Injection Volume: 125 cc Nominal Volume: 125 cc Dilution Factor: 1.0
Instrument ID: HP4508 Lab File ID: C:\HPCHEM\1\DATA\APR10\1601008.D

CAS RN	COMPOUND NAME	CONCENTRATION UNITS: MDL ppb(v)	Q
115-07-1	Propene	2	
75-71-8	Dichlorodifluoromethane	1	
75-45-6	Chlorodifluoromethane	2	
76-14-2	Freon 114	0.2	U
74-87-3	Chloromethane	0.2	J
75-01-4	Vinyl Chloride	0.2	J
106-99-0	1,3-Butadiene	1	U
74-83-9	Bromomethane	0.2	U
75-00-3	Chloroethane	22	
75-43-4	Dichlorofluoromethane	0.2	U
75-69-4	Trichlorofluoromethane	0.4	J
109-66-0	Pentane	1	
107-02-8	Acrolein	2	
75-35-4	1,1-Dichloroethene	25	
76-13-1	Freon 113	1	
67-64-1	Acetone	15	
74-88-4	Methyl Iodide	0.2	U
75-15-0	Carbon Disulfide	7	
75-05-8	Acetonitrile	9	
107-05-1	3-Chloropropene	0.5	U
75-09-2	Methylene Chloride	3	
75-65-0	tert-Butyl Alcohol	0.7	J
107-13-1	Acrylonitrile	0.5	U
156-60-5	trans-1,2-Dichloroethene	1	
1634-04-4	Methyl t-Butyl Ether	0.2	U
110-54-3	Hexane	1	J
75-34-3	1,1-Dichloroethane	15	
108-05-4	Vinyl Acetate	0.2	U
156-59-2	cis-1,2-Dichloroethene	22	
78-93-3	2-Butanone	6	
141-78-6	Ethyl Acetate	0.2	U
96-33-3	Methyl Acrylate	0.2	U
67-66-3	Chloroform	0.3	J
71-55-6	1,1,1-Trichloroethane	67	

U = Compound was undetected at the specified limit of quantitation.
B = Compound was found in method blank. D = analysis of diluted sample.
J = Compound was detected, but below the limit of quantitation.

MEMBER ACIL
Lancaster Laboratories, Inc.
2425 New Holland Pike
PO Box 12425
Lancaster, PA 17605-2425
717-656-2300 Fax: 717-656-2681

Lancaster Laboratories

VOLATILE ORGANICS IN AIR
SUMMA CANISTER SAMPLE
ANALYSIS DATA SHEET

Sample No.: BANK2 | Date Collected: 03/30/04 | Date Received: 04/05/04
Lab Sample ID: 4248790 | Date Analyzed: 04/10/04 | Time Analyzed: 16:55
Canister ID: SUMMA | Pressure Rec'd: 14.7 psia | Final Pressure: 14.7 psia
Injection Volume: 125 cc | Nominal Volume: 125 cc | Dilution Factor: 1.0
Instrument ID: HP4508 | Lab File ID: C:\HPCHEM\1\DATA\APR10\1601008.D

CAS RN	COMPOUND NAME	CONCENTRATION UNITS: MDL ppb(v)	Q
56-23-5	Carbon Tetrachloride	0.2	U
107-06-2	1,2-Dichloroethane	0.2	U
71-43-2	Benzene	0.7	J
540-84-1	Isooctane	0.2	J
142-82-5	Heptane	0.5	J
79-01-6	Trichloroethene	4	
140-88-5	Ethyl Acrylate	0.2	U
78-87-5	1,2-Dichloropropane	0.2	U
80-62-6	Methyl Methacrylate	0.2	U
74-95-3	Dibromomethane	0.2	U
123-91-1	1,4-Dioxane	0.2	U
75-27-4	Bromodichloromethane	0.2	U
10061-01-5	cis-1,3-Dichloropropene	0.2	U
108-10-1	4-Methyl-2-Pentanone	0.5	U
108-88-3	Toluene	6	
111-65-9	Octane	0.5	J
10061-02-6	trans-1,3-Dichloropropene	0.2	U
97-63-2	Ethyl Methacrylate	0.2	U
79-00-5	1,1,2-Trichloroethane	0.2	U
127-18-4	Tetrachloroethene	3	
591-78-6	2-Hexanone	0.5	U
124-48-1	Dibromochloromethane	0.2	U
106-93-4	1,2-Dibromoethane	0.2	U
108-90-7	Chlorobenzene	0.2	U
630-20-6	1,1,1,2-Tetrachloroethane	0.2	U
100-41-4	Ethylbenzene	0.6	J
1330-20-7	m/p-Xylene	2	
95-47-6	o-Xylene	0.9	J
100-42-5	Styrene	0.4	J
75-25-2	Bromoform	0.2	U
98-82-8	Cumene	0.2	U
79-34-5	1,1,2,2-Tetrachloroethane	0.2	U
96-18-4	1,2,3-Trichloropropane	0.2	U
108-86-1	Bromobenzene	0.2	U

U = Compound was undetected at the specified limit of quantitation.
B = Compound was found in method blank. D = analysis of diluted sample.
J = Compound was detected, but below the limit of quantitation.

MEMBER ACIL
Lancaster Laboratories, Inc.
2425 New Holland Pike
PO Box 12425
Lancaster, PA 17605-2425
717-656-2300 Fax: 717-656-2681

Lancaster Laboratories

VOLATILE ORGANICS IN AIR
SUMMA CANISTER SAMPLE
ANALYSIS DATA SHEET

Sample No.: BANK2 Date Collected: 03/30/04 Date Received: 04/05/04
Lab Sample ID: 4248790 Date Analyzed: 04/10/04 Time Analyzed: 16:55
Canister ID: SUMMA Pressure Rec'd: 14.7 psia Final Pressure: 14.7 psia
Injection Volume: 125 cc Nominal Volume: 125 cc Dilution Factor: 1.0
Instrument ID: HP4508 Lab File ID: C:\HPCHEM\1\DATA\APR10\1601008.D

CAS RN	COMPOUND NAME	CONCENTRATION UNITS: MDL ppb(v)	Q
622-96-8	4-Ethyltoluene	0.8	J
108-67-8	1,3,5-Trimethylbenzene	0.6	J
98-83-9	Alpha Methyl Styrene	0.2	U
95-63-6	1,2,4-Trimethylbenzene	1	
541-73-1	1,3-Dichlorobenzene	0.5	U
106-46-7	1,4-Dichlorobenzene	0.5	U
95-50-1	1,2-Dichlorobenzene	0.5	U
67-72-1	Hexachloroethane	0.2	U
120-82-1	1,2,4-Trichlorobenzene	1	U
87-68-3	Hexachlorobutadiene	0.5	U

U = Compound was undetected at the specified limit of quantitation.
B = Compound was found in method blank. D = analysis of diluted sample.
J = Compound was detected, but below the limit of quantitation.

MEMBER ACIL
Lancaster Laboratories, Inc.
2425 New Holland Pike
PO Box 12425
Lancaster, PA 17605-2425
717-656-2300 Fax: 717-656-2681

Lancaster Laboratories

Lancaster Laboratories Sample No. AQ 4248791

BANK_3_TOTAL-040104 Tedlar Bag Grab Air Sample
Site Code: SC001 RFA #: ET04018
Dayton Thermal/Dayton, OH
Collected:04/01/2004 17:06 by SC

Account Number: 10160

Submitted: 04/05/2004 09:15
Reported: 04/28/2004 at 10:04
Discard: 06/28/2004

DaimlerChrysler Corporation
PO Box 537933
Livonia MI 48153-7933

BANK3 SDG#: DCP54-14*

CAT No.	Analysis Name	CAS Number	As Received Result	As Received Method Detection Limit	Units	Dilution Factor

Laboratory Chronicle

CAT No.	Analysis Name	Method	Trial#	Analysis Date and Time	Analyst	Dilution Factor
07869	TO-14A VOA Ext. List Tedlar	EPA Method TO14A	1	04/10/2004 17:38	Roy R Mellott Jr	1
07870	TO-14A VOA Ext List cnt Tedlar	EPA Method TO14A	1	04/10/2004 17:38	Roy R Mellott Jr	1

Lancaster Laboratories

VOLATILE ORGANICS IN AIR
SUMMA CANISTER SAMPLE
ANALYSIS DATA SHEET

Sample No.: BANK3 Date Collected: 03/30/04 Date Received: 04/05/04
Lab Sample ID: 4248791 Date Analyzed: 04/10/04 Time Analyzed: 17:38
Canister ID: SUMMA Pressure Rec'd: 14.7 psia Final Pressure: 14.7 psia
Injection Volume: 125 cc Nominal Volume: 125 cc Dilution Factor: 1.0
Instrument ID: HP4508 Lab File ID: C:\HPCHEM\1\DATA\APR10\1701009.D

CAS RN	COMPOUND NAME	CONCENTRATION UNITS: MDL ppb(v)	Q
115-07-1	Propene	1	
75-71-8	Dichlorodifluoromethane	0.9	J
75-45-6	Chlorodifluoromethane	1	
76-14-2	Freon 114	0.2	U
74-87-3	Chloromethane	0.3	J
75-01-4	Vinyl Chloride	2	
106-99-0	1,3-Butadiene	1	U
74-83-9	Bromomethane	0.2	U
75-00-3	Chloroethane	6	
75-43-4	Dichlorofluoromethane	0.2	U
75-69-4	Trichlorofluoromethane	0.4	J
109-66-0	Pentane	1	
107-02-8	Acrolein	3	
75-35-4	1,1-Dichloroethene	8	
76-13-1	Freon 113	1	J
67-64-1	Acetone	13	
74-88-4	Methyl Iodide	0.2	U
75-15-0	Carbon Disulfide	5	
75-05-8	Acetonitrile	7	
107-05-1	3-Chloropropene	0.5	U
75-09-2	Methylene Chloride	3	
75-65-0	tert-Butyl Alcohol	1	
107-13-1	Acrylonitrile	0.5	U
156-60-5	trans-1,2-Dichloroethene	1	
1634-04-4	Methyl t-Butyl Ether	0.2	U
110-54-3	Hexane	0.6	J
75-34-3	1,1-Dichloroethane	23	
108-05-4	Vinyl Acetate	0.2	U
156-59-2	cis-1,2-Dichloroethene	26	
78-93-3	2-Butanone	5	
141-78-6	Ethyl Acetate	0.2	U
96-33-3	Methyl Acrylate	0.2	U
67-66-3	Chloroform	0.5	J
71-55-6	1,1,1-Trichloroethane	46	

U = Compound was undetected at the specified limit of quantitation.
B = Compound was found in method blank. D = analysis of diluted sample.
J = Compound was detected, but below the limit of quantitation.

MEMBER ACIL
Lancaster Laboratories, Inc.
2425 New Holland Pike
PO Box 12425
Lancaster, PA 17605-2425
717-656-2300 Fax: 717-656-2681

Lancaster Laboratories

VOLATILE ORGANICS IN AIR
SUMMA CANISTER SAMPLE
ANALYSIS DATA SHEET

Sample No.: BANK3 | Date Collected: 03/30/04 | Date Received: 04/05/04
Lab Sample ID: 4248791 | Date Analyzed: 04/10/04 | Time Analyzed: 17:38
Canister ID: SUMMA | Pressure Rec'd: 14.7 psia | Final Pressure: 14.7 psia
Injection Volume: 125 cc | Nominal Volume: 125 cc | Dilution Factor: 1.0
Instrument ID: HP4508 | Lab File ID: C:\HPCHEM\1\DATA\APR10\1701009.D

CAS RN	COMPOUND NAME	CONCENTRATION UNITS: MDL ppb(v)	Q
56-23-5	Carbon Tetrachloride	0.4	J
107-06-2	1,2-Dichloroethane	0.2	U
71-43-2	Benzene	0.7	J
540-84-1	Isooctane	0.2	U
142-82-5	Heptane	0.2	U
79-01-6	Trichloroethene	3	
140-88-5	Ethyl Acrylate	0.2	U
78-87-5	1,2-Dichloropropane	0.2	U
80-62-6	Methyl Methacrylate	0.2	U
74-95-3	Dibromomethane	0.2	U
123-91-1	1,4-Dioxane	0.2	U
75-27-4	Bromodichloromethane	0.2	U
10061-01-5	cis-1,3-Dichloropropene	0.2	U
108-10-1	4-Methyl-2-Pentanone	0.5	U
108-88-3	Toluene	5	
111-65-9	Octane	0.3	J
10061-02-6	trans-1,3-Dichloropropene	0.2	U
97-63-2	Ethyl Methacrylate	0.2	U
79-00-5	1,1,2-Trichloroethane	0.2	U
127-18-4	Tetrachloroethene	2	
591-78-6	2-Hexanone	0.5	U
124-48-1	Dibromochloromethane	0.2	U
106-93-4	1,2-Dibromoethane	0.2	U
108-90-7	Chlorobenzene	0.2	U
630-20-6	1,1,1,2-Tetrachloroethane	0.2	U
100-41-4	Ethylbenzene	0.4	J
1330-20-7	m/p-Xylene	1	
95-47-6	o-Xylene	0.5	J
100-42-5	Styrene	0.3	J
75-25-2	Bromoform	0.2	U
98-82-8	Cumene	0.2	U
79-34-5	1,1,2,2-Tetrachloroethane	0.2	U
96-18-4	1,2,3-Trichloropropane	0.2	U
108-86-1	Bromobenzene	0.2	U

U = Compound was undetected at the specified limit of quantitation.
B = Compound was found in method blank. D = analysis of diluted sample.
J = Compound was detected, but below the limit of quantitation.

MEMBER ACIL
Lancaster Laboratories, Inc.
2425 New Holland Pike
PO Box 12425
Lancaster, PA 17605-2425
717-656-2300 Fax: 717-656-2681

Lancaster Laboratories

VOLATILE ORGANICS IN AIR
SUMMA CANISTER SAMPLE
ANALYSIS DATA SHEET

Sample No.: BANK3 Date Collected: 03/30/04 Date Received: 04/05/04
Lab Sample ID: 4248791 Date Analyzed: 04/10/04 Time Analyzed: 17:38
Canister ID: SUMMA Pressure Rec'd: 14.7 psia Final Pressure: 14.7 psia
Injection Volume: 125 cc Nominal Volume: 125 cc Dilution Factor: 1.0
Instrument ID: HP4508 Lab File ID: C:\HPCHEM\1\DATA\APR10\1701009.D

CAS RN	COMPOUND NAME	CONCENTRATION UNITS: MDL ppb(v)	Q
622-96-8	4-Ethyltoluene	0.2	U
108-67-8	1,3,5-Trimethylbenzene	0.2	U
98-83-9	Alpha Methyl Styrene	0.2	U
95-63-6	1,2,4-Trimethylbenzene	0.3	J
541-73-1	1,3-Dichlorobenzene	0.5	U
106-46-7	1,4-Dichlorobenzene	0.5	U
95-50-1	1,2-Dichlorobenzene	0.5	U
67-72-1	Hexachloroethane	0.2	U
120-82-1	1,2,4-Trichlorobenzene	1	U
87-68-3	Hexachlorobutadiene	0.5	U

U = Compound was undetected at the specified limit of quantitation.
B = Compound was found in method blank. D = analysis of diluted sample.
J = Compound was detected, but below the limit of quantitation.

MEMBER ACIL
Lancaster Laboratories, Inc.
2425 New Holland Pike
PO Box 12425
Lancaster, PA 17605-2425
717-656-2300 Fax: 717-656-2681

Lancaster Laboratories

Quality Control Summary

Client Name: DaimlerChrysler Corporation
Reported: 04/28/04 at 10:04 AM

Group Number: 890889

Matrix QC may not be reported if site-specific QC samples were not submitted. In these situations, to demonstrate precision and accuracy at a batch level, a LCS/LCSD was performed, unless otherwise specified in the method.

Laboratory Compliance Quality Control

Analysis Name	Blank Result	Blank MDL	Report Units	LCS %REC	LCSD %REC	LCS/LCSD Limits	RPD	RPD Max
Batch number: B041001AA	Sample number(s): 4248778-4248780,4248782-4248787							
tert-Butyl Alcohol	N.D.	0.20	ppb(v)					
Propene	N.D.	0.20	ppb(v)					
Dichlorodifluoromethane	N.D.	0.20	ppb(v)					
Chlorodifluoromethane	N.D.	1.0	ppb(v)					
Freon 114	N.D.	0.20	ppb(v)					
Chloromethane	N.D.	0.20	ppb(v)					
Vinyl Chloride	N.D.	0.20	ppb(v)	100		68-135		
1,3-Butadiene	N.D.	1.0	ppb(v)					
Bromomethane	N.D.	0.20	ppb(v)					
Chloroethane	N.D.	0.20	ppb(v)					
Dichlorofluoromethane	N.D.	0.20	ppb(v)					
Trichlorofluoromethane	N.D.	0.20	ppb(v)					
Pentane	N.D.	0.20	ppb(v)					
Acrolein	N.D.	0.50	ppb(v)					
1,1-Dichloroethene	N.D.	0.20	ppb(v)					
Freon 113	N.D.	0.50	ppb(v)					
Acetone	N.D.	1.0	ppb(v)					
Methyl Iodide	N.D.	0.20	ppb(v)					
Carbon Disulfide	N.D.	0.50	ppb(v)					
Acetonitrile	N.D.	0.50	ppb(v)					
3-Chloropropene	N.D.	0.50	ppb(v)					
Methylene Chloride	N.D.	0.50	ppb(v)					
Acrylonitrile	N.D.	0.50	ppb(v)					
trans-1,2-Dichloroethene	N.D.	0.20	ppb(v)					
Methyl t-Butyl Ether	N.D.	0.20	ppb(v)					
Hexane	N.D.	0.20	ppb(v)					
1,1-Dichloroethane	N.D.	0.20	ppb(v)					
Vinyl Acetate	N.D.	0.20	ppb(v)					
cis-1,2-Dichloroethene	N.D.	0.20	ppb(v)					
2-Butanone	N.D.	0.50	ppb(v)					
Ethyl Acetate	N.D.	0.20	ppb(v)					
Methyl Acrylate	N.D.	0.20	ppb(v)					
Chloroform	N.D.	0.20	ppb(v)					
1,1,1-Trichloroethane	N.D.	0.20	ppb(v)	116		81-157		
Carbon Tetrachloride	N.D.	0.20	ppb(v)					
1,2-Dichloroethane	N.D.	0.20	ppb(v)					

*- Outside of specification
(1) The result for one or both determinations was less than five times the LOQ.
(2) The background result was more than four times the spike added.

Lancaster Laboratories

Quality Control Summary

Client Name: DaimlerChrysler Corporation Group Number: 890889
Reported: 04/28/04 at 10:04 AM

Laboratory Compliance Quality Control

Analysis Name	Blank Result	Blank MDL	Report Units	LCS %REC	LCSD %REC	LCS/LCSD Limits	RPD	RPD Max
Benzene	N.D.	0.20	ppb(v)	126		70-150		
Isooctane	N.D.	0.20	ppb(v)					
Heptane	N.D.	0.20	ppb(v)					
Trichloroethene	N.D.	0.20	ppb(v)	114		65-144		
Ethyl Acrylate	N.D.	0.20	ppb(v)					
1,2-Dichloropropane	N.D.	0.20	ppb(v)					
Methyl Methacrylate	N.D.	0.20	ppb(v)					
Dibromomethane	N.D.	0.20	ppb(v)					
1,4-Dioxane	N.D.	0.20	ppb(v)					
Bromodichloromethane	N.D.	0.20	ppb(v)					
cis-1,3-Dichloropropene	N.D.	0.20	ppb(v)					
4-Methyl-2-Pentanone	N.D.	0.50	ppb(v)					
Toluene	N.D.	0.20	ppb(v)					
Octane	N.D.	0.20	ppb(v)					
trans-1,3-Dichloropropene	N.D.	0.20	ppb(v)					
Ethyl Methacrylate	N.D.	0.20	ppb(v)					
1,1,2-Trichloroethane	N.D.	0.20	ppb(v)					
Tetrachloroethene	N.D.	0.20	ppb(v)					
2-Hexanone	N.D.	0.50	ppb(v)					
Dibromochloromethane	N.D.	0.20	ppb(v)					
1,2-Dibromoethane	N.D.	0.20	ppb(v)					
Chlorobenzene	N.D.	0.20	ppb(v)					
1,1,1,2-Tetrachloroethane	N.D.	0.20	ppb(v)					
Ethylbenzene	N.D.	0.20	ppb(v)	97		65-149		
m/p-Xylene	N.D.	0.20	ppb(v)					
o-Xylene	N.D.	0.20	ppb(v)					
Styrene	N.D.	0.20	ppb(v)					
Bromoform	N.D.	0.20	ppb(v)					
Cumene	N.D.	0.20	ppb(v)					
1,1,2,2-Tetrachloroethane	N.D.	0.20	ppb(v)					
1,2,3-Trichloropropane	N.D.	0.20	ppb(v)					
Bromobenzene	N.D.	0.20	ppb(v)					
4-Ethyltoluene	N.D.	0.20	ppb(v)					
1,3,5-Trimethylbenzene	N.D.	0.20	ppb(v)					
Alpha Methyl Styrene	N.D.	0.20	ppb(v)					
1,2,4-Trimethylbenzene	N.D.	0.20	ppb(v)					
1,3-Dichlorobenzene	N.D.	0.50	ppb(v)					
1,4-Dichlorobenzene	N.D.	0.50	ppb(v)	66		37-149		
1,2-Dichlorobenzene	N.D.	0.50	ppb(v)					
Hexachloroethane	N.D.	0.20	ppb(v)					
1,2,4-Trichlorobenzene	N.D.	1.0	ppb(v)					
Hexachlorobutadiene	N.D.	0.50	ppb(v)					

Batch number: B041001AB Sample number(s): 4248788-4248791

tert-Butyl Alcohol	N.D.	0.10	ppb(v)
Propene	N.D.	0.10	ppb(v)
Dichlorodifluoromethane	N.D.	0.10	ppb(v)

*- Outside of specification
(1) The result for one or both determinations was less than five times the LOQ.
(2) The background result was more than four times the spike added.

Lancaster Laboratories

Quality Control Summary

Client Name: DaimlerChrysler Corporation
Reported: 04/28/04 at 10:04 AM

Group Number: 890889

Laboratory Compliance Quality Control

Analysis Name	Blank Result	Blank MDL	Report Units	LCS %REC	LCSD %REC	LCS/LCSD Limits	RPD	RPD Max
Chlorodifluoromethane	N.D.	0.50	ppb(v)					
Freon 114	N.D.	0.10	ppb(v)					
Chloromethane	N.D.	0.10	ppb(v)					
Vinyl Chloride	N.D.	0.10	ppb(v)	100		68-135		
1,3-Butadiene	N.D.	0.50	ppb(v)					
Bromomethane	N.D.	0.10	ppb(v)					
Chloroethane	N.D.	0.10	ppb(v)					
Dichlorofluoromethane	N.D.	0.10	ppb(v)					
Trichlorofluoromethane	N.D.	0.10	ppb(v)					
Pentane	N.D.	0.10	ppb(v)					
Acrolein	N.D.	0.30	ppb(v)					
1,1-Dichloroethene	N.D.	0.10	ppb(v)					
Freon 113	N.D.	0.30	ppb(v)					
Acetone	N.D.	0.50	ppb(v)					
Methyl Iodide	N.D.	0.10	ppb(v)					
Carbon Disulfide	N.D.	0.30	ppb(v)					
Acetonitrile	N.D.	0.30	ppb(v)					
3-Chloropropene	N.D.	0.30	ppb(v)					
Methylene Chloride	N.D.	0.30	ppb(v)					
Acrylonitrile	N.D.	0.30	ppb(v)					
trans-1,2-Dichloroethene	N.D.	0.10	ppb(v)					
Methyl t-Butyl Ether	N.D.	0.10	ppb(v)					
Hexane	N.D.	0.10	ppb(v)					
1,1-Dichloroethane	N.D.	0.10	ppb(v)					
Vinyl Acetate	N.D.	0.10	ppb(v)					
cis-1,2-Dichloroethene	N.D.	0.10	ppb(v)					
2-Butanone	N.D.	0.30	ppb(v)					
Ethyl Acetate	N.D.	0.10	ppb(v)					
Methyl Acrylate	0.20 J	0.10	ppb(v)					
Chloroform	N.D.	0.10	ppb(v)					
1,1,1-Trichloroethane	N.D.	0.10	ppb(v)	116		81-157		
Carbon Tetrachloride	N.D.	0.10	ppb(v)					
1,2-Dichloroethane	N.D.	0.10	ppb(v)					
Benzene	N.D.	0.10	ppb(v)	126		70-150		
Isooctane	N.D.	0.10	ppb(v)					
Heptane	N.D.	0.10	ppb(v)					
Trichloroethene	N.D.	0.10	ppb(v)	114		65-144		
Ethyl Acrylate	N.D.	0.10	ppb(v)					
1,2-Dichloropropane	N.D.	0.10	ppb(v)					
Methyl Methacrylate	N.D.	0.10	ppb(v)					
Dibromomethane	N.D.	0.10	ppb(v)					
1,4-Dioxane	0.20 J	0.10	ppb(v)					
Bromodichloromethane	N.D.	0.10	ppb(v)					
cis-1,3-Dichloropropene	N.D.	0.10	ppb(v)					
4-Methyl-2-Pentanone	N.D.	0.30	ppb(v)					
Toluene	N.D.	0.10	ppb(v)					
Octane	N.D.	0.10	ppb(v)					

*- Outside of specification
(1) The result for one or both determinations was less than five times the LOQ.
(2) The background result was more than four times the spike added.

Lancaster Laboratories

Quality Control Summary

Client Name: DaimlerChrysler Corporation Group Number: 890889
Reported: 04/28/04 at 10:04 AM

Laboratory Compliance Quality Control

Analysis Name	Blank Result	Blank MDL	Report Units	LCS %REC	LCSD %REC	LCS/LCSD Limits	RPD	RPD Max
trans-1,3-Dichloropropene	N.D.	0.10	ppb(v)					
Ethyl Methacrylate	0.20 J	0.10	ppb(v)					
1,1,2-Trichloroethane	N.D.	0.10	ppb(v)					
Tetrachloroethene	N.D.	0.10	ppb(v)					
2-Hexanone	N.D.	0.30	ppb(v)					
Dibromochloromethane	N.D.	0.10	ppb(v)					
1,2-Dibromoethane	N.D.	0.10	ppb(v)					
Chlorobenzene	N.D.	0.10	ppb(v)					
1,1,1,2-Tetrachloroethane	N.D.	0.10	ppb(v)					
Ethylbenzene	N.D.	0.10	ppb(v)	97		65-149		
m/p-Xylene	N.D.	0.10	ppb(v)					
o-Xylene	N.D.	0.10	ppb(v)					
Styrene	N.D.	0.10	ppb(v)					
Bromoform	N.D.	0.10	ppb(v)					
Cumene	N.D.	0.10	ppb(v)					
1,1,2,2-Tetrachloroethane	N.D.	0.10	ppb(v)					
1,2,3-Trichloropropane	N.D.	0.10	ppb(v)					
Bromobenzene	N.D.	0.10	ppb(v)					
4-Ethyltoluene	N.D.	0.10	ppb(v)					
1,3,5-Trimethylbenzene	N.D.	0.10	ppb(v)					
Alpha Methyl Styrene	N.D.	0.10	ppb(v)					
1,2,4-Trimethylbenzene	N.D.	0.10	ppb(v)					
1,3-Dichlorobenzene	N.D.	0.30	ppb(v)					
1,4-Dichlorobenzene	N.D.	0.30	ppb(v)	66		37-149		
1,2-Dichlorobenzene	N.D.	0.30	ppb(v)					
Hexachloroethane	N.D.	0.10	ppb(v)					
1,2,4-Trichlorobenzene	N.D.	0.50	ppb(v)					
Hexachlorobutadiene	N.D.	0.30	ppb(v)					
Batch number: B041001AC	Sample number(s): 4248781							
tert-Butyl Alcohol	N.D.	0.10	ppb(v)					
Propene	N.D.	0.10	ppb(v)					
Dichlorodifluoromethane	N.D.	0.10	ppb(v)					
Chlorodifluoromethane	N.D.	0.50	ppb(v)					
Freon 114	N.D.	0.10	ppb(v)					
Chloromethane	N.D.	0.10	ppb(v)					
Vinyl Chloride	N.D.	0.10	ppb(v)	100		68-135		
1,3-Butadiene	N.D.	0.50	ppb(v)					
Bromomethane	N.D.	0.10	ppb(v)					
Chloroethane	N.D.	0.10	ppb(v)					
Dichlorofluoromethane	N.D.	0.10	ppb(v)					
Trichlorofluoromethane	N.D.	0.10	ppb(v)					
Pentane	N.D.	0.10	ppb(v)					
Acrolein	N.D.	0.30	ppb(v)					
1,1-Dichloroethene	N.D.	0.10	ppb(v)					
Freon 113	N.D.	0.30	ppb(v)					
Acetone	N.D.	0.50	ppb(v)					

*- Outside of specification
(1) The result for one or both determinations was less than five times the LOQ.
(2) The background result was more than four times the spike added.

Lancaster Laboratories

Quality Control Summary

Client Name: DaimlerChrysler Corporation Group Number: 890889
Reported: 04/28/04 at 10:04 AM

Laboratory Compliance Quality Control

Analysis Name	Blank Result	Blank MDL	Report Units	LCS %REC	LCSD %REC	LCS/LCSD Limits	RPD	RPD Max
Methyl Iodide	N.D.	0.10	ppb(v)					
Carbon Disulfide	N.D.	0.30	ppb(v)					
Acetonitrile	N.D.	0.30	ppb(v)					
3-Chloropropene	N.D.	0.30	ppb(v)					
Methylene Chloride	N.D.	0.30	ppb(v)					
Acrylonitrile	N.D.	0.30	ppb(v)					
trans-1,2-Dichloroethene	N.D.	0.10	ppb(v)					
Methyl t-Butyl Ether	N.D.	0.10	ppb(v)					
Hexane	N.D.	0.10	ppb(v)					
1,1-Dichloroethane	N.D.	0.10	ppb(v)					
Vinyl Acetate	N.D.	0.10	ppb(v)					
cis-1,2-Dichloroethene	N.D.	0.10	ppb(v)					
2-Butanone	N.D.	0.30	ppb(v)					
Ethyl Acetate	N.D.	0.10	ppb(v)					
Methyl Acrylate	N.D.	0.10	ppb(v)					
Chloroform	N.D.	0.10	ppb(v)					
1,1,1-Trichloroethane	N.D.	0.10	ppb(v)	116		81-157		
Carbon Tetrachloride	N.D.	0.10	ppb(v)					
1,2-Dichloroethane	N.D.	0.10	ppb(v)					
Benzene	N.D.	0.10	ppb(v)	126		70-150		
Isooctane	N.D.	0.10	ppb(v)					
Heptane	N.D.	0.10	ppb(v)					
Trichloroethene	N.D.	0.10	ppb(v)	114		65-144		
Ethyl Acrylate	N.D.	0.10	ppb(v)					
1,2-Dichloropropane	N.D.	0.10	ppb(v)					
Methyl Methacrylate	N.D.	0.10	ppb(v)					
Dibromomethane	N.D.	0.10	ppb(v)					
1,4-Dioxane	N.D.	0.10	ppb(v)					
Bromodichloromethane	N.D.	0.10	ppb(v)					
cis-1,3-Dichloropropene	N.D.	0.10	ppb(v)					
4-Methyl-2-Pentanone	0.40 J	0.30	ppb(v)					
Toluene	N.D.	0.10	ppb(v)					
Octane	N.D.	0.10	ppb(v)					
trans-1,3-Dichloropropene	N.D.	0.10	ppb(v)					
Ethyl Methacrylate	N.D.	0.10	ppb(v)					
1,1,2-Trichloroethane	N.D.	0.10	ppb(v)					
Tetrachloroethene	N.D.	0.10	ppb(v)					
2-Hexanone	N.D.	0.30	ppb(v)					
Dibromochloromethane	N.D.	0.10	ppb(v)					
1,2-Dibromoethane	N.D.	0.10	ppb(v)					
Chlorobenzene	N.D.	0.10	ppb(v)					
1,1,1,2-Tetrachloroethane	N.D.	0.10	ppb(v)					
Ethylbenzene	N.D.	0.10	ppb(v)	97		65-149		
m/p-Xylene	N.D.	0.10	ppb(v)					
o-Xylene	N.D.	0.10	ppb(v)					
Styrene	N.D.	0.10	ppb(v)					
Bromoform	N.D.	0.10	ppb(v)					

*- Outside of specification
(1) The result for one or both determinations was less than five times the LOQ.
(2) The background result was more than four times the spike added.

Lancaster Laboratories

Quality Control Summary

Client Name: DaimlerChrysler Corporation Group Number: 890889
Reported: 04/28/04 at 10:04 AM

Laboratory Compliance Quality Control

Analysis Name	Blank Result	Blank MDL	Report Units	LCS %REC	LCSD %REC	LCS/LCSD Limits	RPD	RPD Max
Cumene	N.D.	0.10	ppb(v)					
1,1,2,2-Tetrachloroethane	N.D.	0.10	ppb(v)					
1,2,3-Trichloropropane	N.D.	0.10	ppb(v)					
Bromobenzene	N.D.	0.10	ppb(v)					
4-Ethyltoluene	N.D.	0.10	ppb(v)					
1,3,5-Trimethylbenzene	N.D.	0.10	ppb(v)					
Alpha Methyl Styrene	N.D.	0.10	ppb(v)					
1,2,4-Trimethylbenzene	N.D.	0.10	ppb(v)					
1,3-Dichlorobenzene	N.D.	0.30	ppb(v)					
1,4-Dichlorobenzene	N.D.	0.30	ppb(v)	66		37-149		
1,2-Dichlorobenzene	N.D.	0.30	ppb(v)					
Hexachloroethane	N.D.	0.10	ppb(v)					
1,2,4-Trichlorobenzene	N.D.	0.50	ppb(v)					
Hexachlorobutadiene	N.D.	0.30	ppb(v)					

*- Outside of specification
(1) The result for one or both determinations was less than five times the LOQ.
(2) The background result was more than four times the spike added.

DAIMLERCHRYSLER 10160/890889/4248778-91 Chain-of-Custody 3661 B

Lancaster Laboratories 2425 New Holland Pike Lancaster, PA 17601 Phone Number: (717) 656-2300 Fax Number: (717) 656-2681	Project Name: DCX - DAYTON THERMAL / BEHR Site Location: DAYTON, OHIO Site Code: RFA Number: ETO 4018 DaimlerChrysler PM: GARY STANCZUK	Consultant: EARTH TECH Address: 4135 TECHNOLOGY PARKWAY SHEBOYGAN, WI 53083 Consultant PM ROB STENSON Phone: 920-458-8711 Fax: 920-458-0550

Turn-around Time Request: (circle)
24 calendar hrs.
48 calendar hrs.
7 calendar days
(14 calendar days)

Data Package Deliverables: (circle)
(DaimlerChrysler Level 1)
DaimlerChrysler Level 2
CLP

Compound List-Parameter/Method/Bottle Type/Preservative

Matrix Codes
S - Soil, SW - Surface Water, GW - Groundwater, A - Air, Sed. - Sediment, O - Other (specify)

Are aqueous samples field filtered for metals? Yes No

Field Sample Identification	Date Collected	Time Collected	Grab (G) or Composite (C)	Matrix Code	Total # of Containers	9341 TEDLAR									Remarks
BANK G TOTAL-033004	03/30/04	908	G	A	1	X									
BANK F TOTAL-033004	03/30/04	1125	G	A	1	X									
BANK E TOTAL-033004	03/30/04	1350	G	A	1	X									
BANK D TOTAL-033004	03/30/04	1508	G	A	1	X									
BANK B TOTAL-033004	03/30/04	1645	G	A	1	X									
BANK A TOTAL-033004	03/30/04	1749	G	A	1	X									
BANK I TOTAL-033104	03/31/04	942	G	A	1	X									
BANK 4 TOTAL-033104	03/31/04	1202	G	A	1	X									
BANK 6 TOTAL-033104	03/31/04	1514	G	A	1	X									
BANK 5 TOTAL-033104	03/31/04	1652	G	A	1	X									

Sampler(s): STEVE CERVI

Cooler ID #

Samples Relinquished under Airbill No. 841756803082

Temperature (corrected) N/A C

Relinquished by:	Date:	Time:	Received by:	Date:	Time:	Custody Seal Intact?
L. Carlson	3/26/04	1537				Yes No

Is RFA sampling complete? (Yes) No

Relinquished by:	Date:	Time:	Received for Laboratory by:	Date:	Time:	Custody Seal Intact?
STEVE CERVI	4/2/04	1330	[illegible]	4/5/04	0915	(Yes) No

DaimlerChrysler Corporation 800 Chrysler Drive, CIMS 482-00-51, Auburn Hills, Michigan 48326-2757

Distribution: White copy: Data package Yellow: Retained by laboratory Pink: Retained by sampler

Revision No. 3
Created: July 9, 1999

DAIMLERCHRYSLER 10160/890889/4248778-91 Chain-of-Custody 3660 B

Lancaster Laboratories 2425 New Holland Pike Lancaster, PA 17601 Phone Number: (717) 656-2300 Fax Number: (717) 656-2681	Project Name: DCX-DAYTON THERMAL/BEHR Site Location: DAYTON, OHIO Site Code: RFA Number: ET04018 DaimlerChrysler PM: GARY STANCZUK	Consultant: EARTH TECH Address: 4135 TECHNOLOGY PARKWAY SHEBOYGAN, WI 53083 Consultant PM ROB STENSON Phone: 920-458-8711 Fax: 920-458-0550

Turn-around Time Request: (circle)
- 24 calendar hrs.
- 48 calendar hrs.
- 7 calendar days
- 14 calendar days

Data Package Deliverables: (circle)
- DaimlerChrysler Level 1
- DaimlerChrysler Level 2
- CLP

Compound List-Parameter/Method/Bottle Type/Preservative: 9341 TEDLAR

Matrix Codes: S - Soil; SW - Surface Water; GW - Groundwater; A - Air; Sed. - Sediment; O - Other (specify)

Are aqueous samples field filtered for metals? Yes No

Field Sample Identification	Date Collected	Time Collected	Grab (G) or Composite (C)	Matrix Code	Total # of Containers	9341 TEDLAR									Remarks
BANK C TOTAL-040104	04/01/04	936	G	A	1	X									
BANK 1 TOTAL-040104	04/01/04	1125	G	A	1	X									
BANK 2 TOTAL-040104	04/01/04	1522	G	A	1	X									
BANK 3 TOTAL-040104	04/01/04	1706	G	A	1	X									

n/a

Sampler(s): STEVE CERVI	Cooler ID #			Samples Relinquished under Airbill No. 847568030846		Temperature (corrected) ___ C
	Relinquished by: STEVE CERVI	Date: 4/2/04	Time: 1330	Received by:	Date:	Time:	Custody Seal Intact? Yes No
Is RFA sampling complete? Yes No	Relinquished by:	Date:	Time:	Received for Laboratory by:	Date: 4/5/04	Time: 0915	Custody Seal Intact? Yes No

DaimlerChrysler Corporation 800 Chrysler Drive, CIMS 482-00-51, Auburn Hills, Michigan 48326-2757

Distribution: White copy: Data package Yellow : Retained by laboratory Pink: Retained by sampler

Revision No. 3
Created: July 9, 1999

Lancaster Laboratories
2425 New Holland Pike
Lancaster, PA 17601
* Phone (717)-656-2300
Fax (717) 656-2681

DAIMLERCHRYSLER CORPORATION BOTTLE REQUEST AND SHIPMENT FORM

0808 B

PARAMETER	NO. OF BOTTLES NEEDED FOR TEST	NO. OF BOTTLES SENT	CHEMICAL PRESERVATIVE	PRESERVATIVE LOT NO.	BOTTLE TYPE	BOTTLE LOT NO.
Volatiles (H2O)	3		HCl		Vials (40 ml)	
Semivolatiles (H2O)	2*		None	N/A	Amber Liter	
PCBs (H2O)	2*		None	N/A	Amber Liter	
Metals (H2O)	1		HNO3		Plastic Liter	
Cyanide (H2O)	1		NaOH/ascorbic acid		Plastic Liter	
TPH- 418.1 (H2O)	2*		HCl		Amber Liter	
TPH-GRO (H2O)	3		HCl		Vials (40 ml)	
TPH-DRO (H2O)	2*		HCl		Amber Liter	
Volatiles (Soil)	1		None	N/A	125ml Glass Jar	
Volatiles (Soil - Low Level)	3		None	N/A	5 g Encore Samplers	
Volatiles (Soil - High Level)	1		None	N/A	5 g Encore Samplers	
TPH-GRO (Soil)	2		None	N/A	5 g Encore Samplers	
Semivolatiles/PCBs/418.1/ DRO/Metals/Moisture (Soil)	1		None	N/A	500ml Glass Jar	
Tedlar bags	1	21	None		1 liter Air bag	023900
DI Water	N/A		N/A	N/A	Amber Liter	
Trip Blank	2		HCl		Vials (40 ml)	
Temperature Blank	N/A	1 per cooler	N/A	N/A	N/A	N/A

Project Name: Dayton Thermal
RFA Number: FTO 4012
Ship To Address:
FedEx World Service Center
Airport Area
3605 Concorde Rd
Vandalia, OH 45377
Hold for P/U by Earth Tech

Customer Service Rep: Kathy Klinefelter Date: 3/26/04

pH strips? Yes / No
DaimlerChrysler COCs? Yes / No
Site-specific MS/MSD ? Yes / No
Labels? Yes / No
Custody seals? Yes / No
Cooler No(s): Boxes (3)
Packed by: [signature] Date: 3/26/04
Shipped by: [signature] Date: 3/26/04

[redacted]

Sampling Notes:

* - Two one-liter bottles are recommended for collection of semivolatiles, PCBs and TPH-DRO to allow for sample reextraction. However, if well volumes do not permit collection of this volume for each parameter, a minimum of 1 liter is required for each parameter.

IF SITE-SPECIFIC MS/MSD REQUESTED IN RFA: Additional bottles have been provided to permit collection of adequate volumes for SITE-SPECIFIC MS/MSD analyses for each analytical parameter. MS/MSD samples should be collected for each parameter and matrix at a rate of 1 in 20 samples or per sampling event if less than 20 samples are collected.

Additional Comments:

Please return all unused glassware and coolers when sampling is complete. Please return this form with final sample shipment.

White copy - original - return to lab
Revision 1 / July 9, 1999

Yellow copy - retained by field

Pink copy - retained by shipper

e-mail: sales@catalyticcombustion.com

CATALYTIC COMBUSTION CORPORATION
OWNER'S MANUAL

Project Name: **LBG / Dayton, Ohio**

CCC Job No. 99-216

READ THIS MANUAL
for important safety, installation, operation
and maintenance instructions.
Keep this manual with the unit
at all times.

Issued: June 1999

Catalytic Combustion Corporation
709 21st Avenue
Bloomer, WI 54724

Phone: (715) 568-2882
Fax: (715) 568-2884

CCC
Vapor Liquid Separator (VLS50)

Installation and Maintenance Instructions

Note: The VLS50 is top heavy due to the compact base footprint. Use proper safety methods at all times when transporting and handling this unit. The approximate weight is 450 Lbs. Have a qualified Electrician connect all wiring. Failure to follow these instructions may effect the unit warranty.

- Upon receipt of this unit inspect for any damage. If damage is noted, document the damage with the carrier/trucking company.
- Remove all crating materials. Take special care not to damage the site tube or component wiring when removing the crate.
- Remove the shipping pallet from the VLS base.
- Move the VLS50 into its general location of operation.
  Note: The VLS has an intake port and an exhaust port. The intake port is lower than the exhaust port. The VLS intake is typically attached to the well field manifold. The exhaust is typically connected to the process vacuum device.
- Yellow arrows indicate the direction of flow on all CCC VLS models.
- Connect the VLS intake and exhaust to the appropriate pipelines.
- Anchor the VLS to the floor using the four 9/16" holes supplied on the base feet.
- If your VLS50 has a condensate transfer pump, have a **Qualified Electrician** make all connections. Bump the Condensate transfer pump motor to check for proper directional rotation.
- If your VLS 50 has a float switch or switches, have a **Qualified Electrician** make all connections.

Maintenance Instructions

The VLS50 is a simple unit to maintain.

Every 2 months inspect for sediment accumulation inside the VLS50. To accomplish this task:

1. Manually pump down the VLS50 contents to the lowest possible level.
2. Shut down all power and lock out the power panel.
3. Place a bucket under the bottom drain ball valve.
4. Open valve slowly and allow a few gallons of water into the bucket.
5. If the water is muddy, empty the balance of the VLS50 contents and back flush the unit with clean water through the drain valve. Do not fill more than 1/2 full when back flushing. Drain the VLS50 through the drain valve. Continue this process until the VLS50 contents are clean. Close the drain valve.
6. Unlock the power panel and return the system to its normal operating mode.

Every 2 to 4 months inspect the internal demister for contamination. To accomplish this task:

1. Remove all power from the system and lock out the power panel.
2. Remove the top cover bolts of the VLS 50.
3. Remove the top cover. (Take care not to damage the cover gasket.)
4. Look inside the unit from the top, a wire mesh pad will be visible. Remove the pad hold down brackets.
5. Lift the pad straight up and out of the VLS50.
6. Inspect the pad for contaminant build up. If the demister pad is contaminated CCC suggests a high-pressure wash down or replacement of the pad. Replacement demister pads can be ordered from CCC at 715-568-2882.
7. After replacing/cleaning the mesh pad, install it back into the VLS50. Install the hold down brackets. Inspect the cover gasket, it should be attached to the top sealing surface of the demister body and free from nicks or defects. If defective, contact CCC for a replacement gasket. An industrial grade silicone sealant can be used as a **temporary** measure if need be.

8. Replace the top cover. Install bolts and secure cover into position.

9. Unlock the power panel and return the system to its normal operating mode.

Site tube and float system maintenance

The float system on CCC VLS systems typically contains a 3-point float switch. In some cases, the customer has requested a single point float switch. In either case, the 3 point switch controls the condensate transfer pump and will shut the system down if for some reason the system indicates a HIGH-HIGH level in the VLS. The float switch must be kept clean. In some cases, ground water contaminates will buildup on the float shaft and hampers the float movement. This will effect the operation of the condensate transfer pump.

If the site tube becomes cloudy or contaminated, it is best to clean the tube and the float switch. To accomplish this task:

1. Remove all power from the system and lock out the power panel.

2. Unscrew the union from the top of the site tube and carefully lift the switch assembly out of the tube.

3. Inspect the switch assembly for contamination buildup. If a buildup is seen, cleaning each switch is advised. Follow this instruction for each float.

Note: The float itself is positioned such that it acts as a Normally Open (N.O.) contact or a Normally Closed (N.C.) contact. There is a small step on one end of the float. This step will be either at the top of the switch or the bottom of the switch. In either case the switch must be re-assembled with the float in the original position. Failure to re-assemble as original will cause the condensate pump to improperly function or the system will not start at all.

Each switch consists of 5 separate pieces:

1. Keeper clip
2. Retainer base
3. Slosh shield
4. Float
5. Weight/ wire assembly

4. With the weight/ wire assembly in hand; position the switch so the keeper clip is up.

5. Remove the keeper clip.

6. Remove the retainer base.

7. Remove the slosh shield. The float will be exposed. Examine the float for the step location as mentioned in the note above.

8. Remove the float from the stem.

9. Thoroughly clean the stem, float, and slosh shield and retainer base.

10. Reassemble the float components in the exact original position.

11. Do this for all floats in the site tube.

12. Cleaning of the site tube. CCC has a special tube cleaning brush available for $20.00. To order this brush, call CCC at 715-568-2882. The brush is custom made for the purpose of cleaning the VLS50 site tube.

13. Insert the brush into the top of the site tube. Run the brush up and down the tube to remove all buildup. Flush the tube with water. Once clean, remove the brush from the tube.

14. Carefully install the float switch assembly back into the site tube.

15. Secure the union.

16. Unlock the power and return the system to a normal operating mode.

    Watch the system for at least 2 VLS condensate pump cycles to assure the floats are functioning properly. When the liquid in the VLS raises the HIGH-level float switch, the condensate pump should turn on after a slight delay (5 to 10 seconds). The level in the site tube should drop to the LOW switch position. When the LOW level switch drops to the lowest possible position, the condensate pump should stop after a slight delay, (5 to 10 seconds).

If there are any questions concerning the maintenance of a CCC VLS50, please contact CCC at 715-568-2882.

\\CAT\USERS\Karl\PROJECTS\INSTRUCT\new 3 point.doc

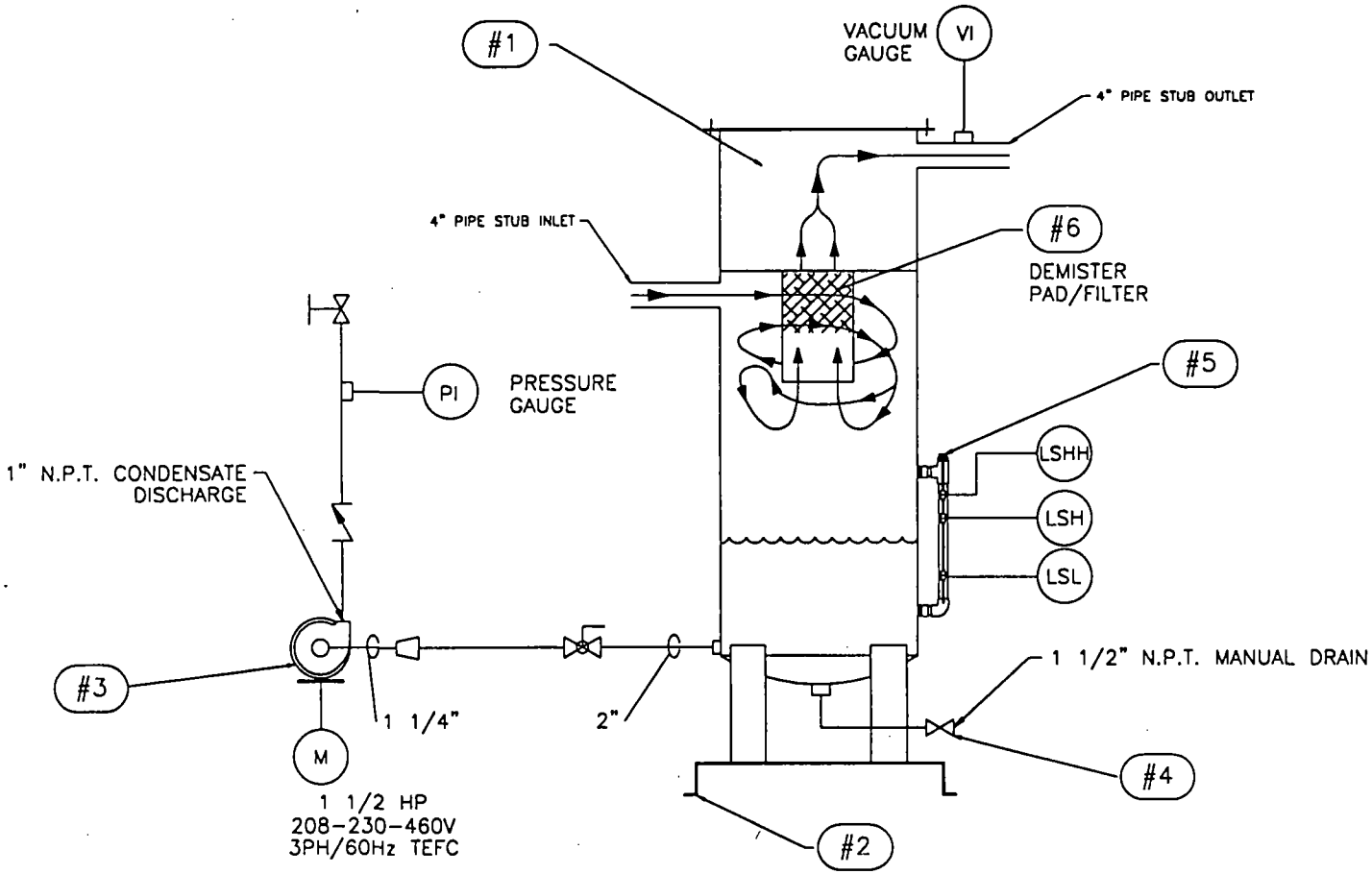

REV	DATE	DESCRIPTION

CUSTOMER: LBG DAYTON OHIO

TITLE: P & ID

SCALE NONE | DATE 12/15/98 | DRAWN BY R.R. | CHK'D BY K.V. | PROJECT NO. REF. 98318 | REV 0

NOT ON SCALE (SCLE) DWG | DO NOT SCALE THIS DRAWING | DWG NO. P-1D

D

SYMBOLOGY

EQUIPMENT

- VAPOR/LIQUID SEPARATOR
- OIL/WATER SEPERATOR
- GAS SCRUBBER
- PARTICULATE SCRUBBER
- CONTROL PANEL
- ELECTRIC HEATER
- GAS BURNER
- HEAT EXCHANGER
- CATALYST REACTOR
- FLEXIBLE HOSE CONNECTOR
- FLEX CONNECTOR
- FLAME ARRESTOR
- PRESSURE BLOWER
- POSITIVE BLOWER
- REGENERATIVE BLOWER
- LIQUID RING PUMP
- VANE COMPRESSOR
- RECIRCULATION PUMP
- VENTILATION FAN
- LIQUID TRANSFER PUMP
- METERING PUMP
- MOTOR
- SKID
- VIBRATION ISOLATORS
- AIR FLOW INDICATOR
- LIQUID FLOW METER
- AIR INTAKE SCREEN
- INLINE SILENCER
- AIR INTAKE FILTER/SILENCER
- INLINE FILTER
- FLOAT PROBE
- SIGHT TUBE

PROCESS LINES

- PIPING
- HOSE
- LINE SIZE
- FLOW DIRECTION

INSTRUMENT LINES

- FIELD WIRED
- FACTORY WIRED
- INSTRUMENT CAPILLARY TUBING
- INSTRUMENT AIR

MATERIAL

CI	CAST IRON
CPVC	CLORINATED POLYVINYL CHLORIDE
CS	CARBON STEEL
CU	COPPER
FRP	FIBERGLASS REINFORCED PLASTIC
GS	GALVANIZED STEEL
PVC	POLYVINYL CHLORIDE
SCH	SCHEDULE
SS	STAINLESS STEEL

- OBSERVATION VIEW PORT
- SI — SPARK IGNITOR
- FR — FLAME ROD

PIPING & VALVES

- BALL
- BUTTERFLY
- CHECK
- GATE
- ORIFICE METERING
- LUBRICATED PLUG
- SOLENOID 2-WAY
- VACUUM RELIEF
- PRESSURE RELIEF
- PRESSURE REDUCING SELF CONTAINED
- PRESSURE REDUCING EXTERNAL PRESSURE
- PRESSURE REDUCING DIFFERENTIAL PRESSURE
- PRESSURE REDUCING VENTED
- MOTOR ACTUATED
- 3 WAY
- REDUCER
- Y-STRAINER
- SAMPLE/TEST PORT
- SCREW/CAP PORT
- FLANGE
- UNION
- ORFICE PLATE

MEASURED VARIABLES

ELECTRICAL

- X — LOCALLY MOUNTED
- XX — ALARM
- XX — PANEL MOUNTED
- I — INTERLOCKS
- H-O-A SWITCH
- PLC — PROGRAMMABLE LOGIC CONTROLLER
- START-STOP PB
- E — EMERGENCY STOP

FIRST LETTERS

F	FLOW
L	LEVEL
P	PRESSURE
T	TEMPERATURE
V	VACUUM
W	pH
X	CONDUCTIVITY

SUCCEEDING LETTERS

A	ALARM
C	CONTROL
D	DIFFERENTIAL
E	PRIMARY ELEMENT
G	GAUGE
H	HIGH
I	INDICATOR
L	LOW
Q	TOTALIZER
R	RECORD
S	SWITCH
T	TRANSMITTER

REV	DATE	DESCRIPTION
1	1/22/99	UPDATED (EMERG. E-STOP)

CATALYTIC COMBUSTION CORPORATION

CUSTOMER

TITLE: LEGEND OF SYMBOLS

SCALE 1=2 | DATE | DRAWN BY H.R. | CHK'D BY G.U. | PROJECT NO. | REV. B

INCH DIM.=X.XX (XX.X)=mm DIM. | DO NOT SCALE THIS DRAWING | DWG. NO. SD232 | B

ROJ. NAME: LBG DAYTON
CC PROJ. N0: 99216
ROJ. MANAGER: KARL WITTMANN

PROJ. ORDER DATE:
TARGET SHIP DATE:
BOM ISSUE DATE:

BOM# /

evision No. 1 of 1 BOM REF CCC DWG A2

em o.	Qty	CCC Part #	Description	MFG Part #	Vend. Code	P.O. #	Del. Date	Date Rec'd	Unit Cost	Ext. Cost	Actual Cost
1	1	A2-A	VLS 50 FT 4" IN/OUT								
2	1	G1-A1001	SKID DETAIL								
3	1	G2-A1000	CONDENSATE PUMP ASS'Y								
4	1	G6-A1001	DRAIN ASS'Y								
5	1	G3-B1000	SITE GLASS WITH 3 POINT HANGING FLOAT ASS'Y								
6	1		DEMISTER, ACS, 3BF, 14" OD X 6" THICK 304SS								
7											
8											
9											
0											
1											
2											
3											
4											
5											
6											
17											

BOM# 1/1

ITEM	QTY	DESCRIPTION	SIZING OPTIONS	DWG. #
1	1	TANK ASSEMBLY	N/A	A2-A
2	1	SKID DETAIL	N/A	G1-A1001
3	1	PUMP INLET/OUTLET ASSEMBLY	CD100	G2-A1000
			CD150	G2-A2000
4	1	DRAIN ASSEMBLY	1 1/2"	G6-A1001
			3"	G6-B1001
5	1	SIGHT GLASS ASSEMBLY	SINGLE/ TRIPLE POINT	G3-A1000
			TRIPLE POINT	G3-B1000
6	16	BOLTS	3/8-16 UNC - 1 1/4" LONG	N/A
	16	NUTS	3/8-16 UNC	N/A
	32	FLAT WASHERS	3/8 (2 PER BOLT)	N/A

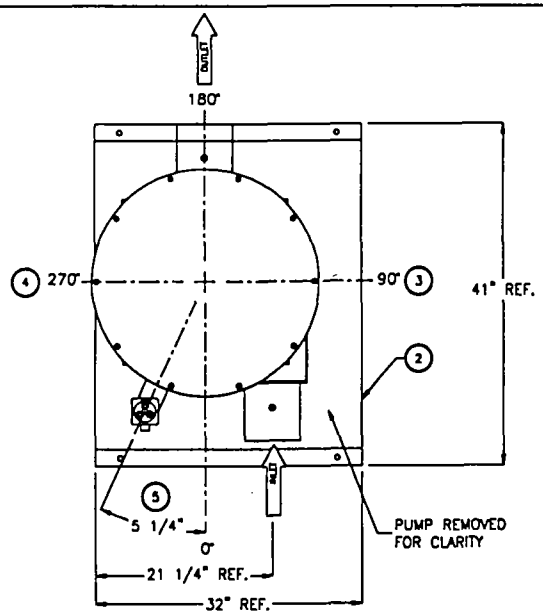

MATERIAL: UNLESS OTHERWISE SPECIFIED C.S. - 10 GA. (.1345")

QTY: (1) VLS ASSEMBLY REQUIRED

** NOTE **
ALL DIMENSIONS SHOWN ARE CONSISTANT FOR ALL SIZING OPTIONS

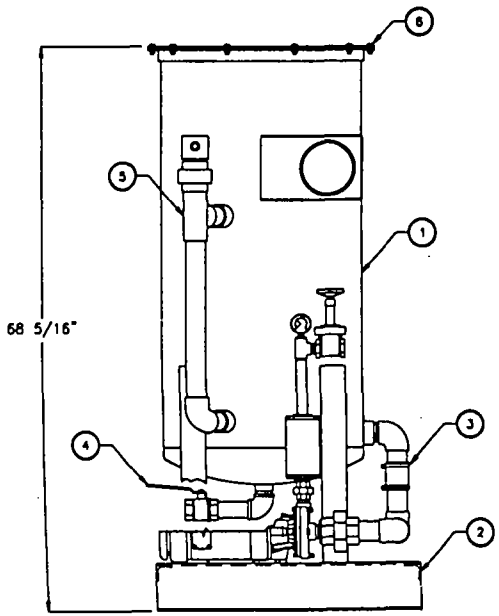

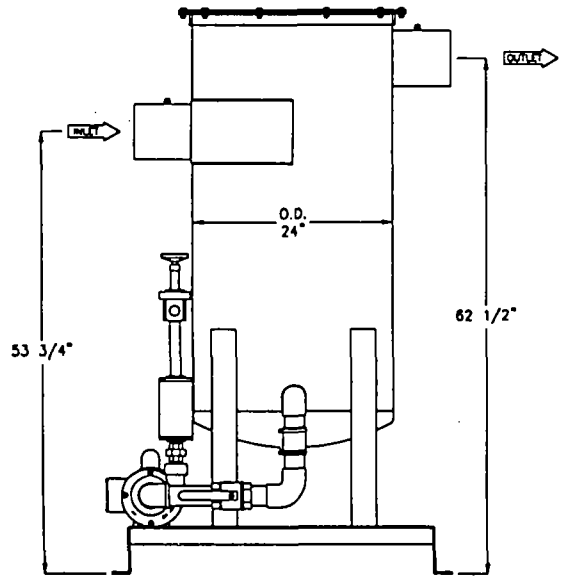

REV	DATE	DESCRIPTION

CUSTOMER: LBG DAYTON OHIO

TITLE: COMPLETE ASSEMBLY VLS - LOV VACUUM SYSTEM

SCALE: 1:5 | DATE: 2/3/99 | DRAWN BY: M.E. | CHK'D BY: D.H. | PROJECT NO.: | REV: B

INCH DIM.=MILLI (XLS)=mm DIM. | DO NOT SCALE THIS DRAWING | DWG. NO. A2

ACS INDUSTRIES, LP
Separations Technology Division

ACS Industries, LP
Separations Technology Division
14211 Industry Road
Houston, TX 77053
(800) 231-0077 · (713) 434-0934 · Fax: (713) 433-6201
http://www.acsindustries.com, e-mail: acstx@flash.net

Customer:	LBG
Contact:	JOHN STREY
Quote Number:	
Date:	05/25/1999
Reference Number:	99216
Engineer:	KARL WITTMANN

BOM# 1/6

PROCESS	CASE 1
Gas/Liquid system	Air / Water
Temperature, °F	60
Pressure, psia	12.535 — 60" H_2O VAC
Compressibility factor	1
Gas density, lb/ft³	0.0652
Gas viscosity, centipoise	0.0185
Gas flow rate, acfs	8.33
Liquid density, lb/ft³	62.34
Liquid viscosity, centipoise	1.129
Fouling	No

PAD/VANE DEFINITION	
Pad style	3BF
MistMaster®	No
Pad density	7.2
Wire diameter(s)	0.006
Surface area(s)	120
Percent voids	98.6
Material	Metal

PERFORMANCE		
% Collection Eff. @ 3 µm	98.58	
4 µm	99.82	
5 µm	99.95	61C @ 14"
10 µm	>99.99	
20 µm	>99.99	
Dry pressure drop, in-water	0.4188	

GEOMETRY	
Pad/vane thickness, inch	6
Pad shape	Round
Actual Dimension 1, in*	14
Actual Dimension 2, in**	--
Actual Capacity factor	0.2521
Actual Velocity, fps	7.792
Actual Area, ft²	1.069
Optimum Capacity factor	0.3013
Optimum Velocity, fps	9.312
Optimum Area, ft²	0.8945

* Dimension 1: Diameter (round, segment); Length (rectangle)
** Dimension 2: Width (rectangle); Segment width (segment)

ACS INDUSTRIES, LP
Separations Technology Division

ACS Industries, LP
Separations Technology Division
14211 Industry Road
Houston, TX 77053
(800) 231-0077 · (713) 434-0934 · Fax: (713) 433-6201
http://www.acsindustries.com, e-mail: acstx@flash.net

Customer:	LBG
Contact:	JOHN STREY
Quote Number:	
Date:	05/25/1999
Reference Number:	99216
Engineer:	KARL WITTMANN

BOM# 1/6

PROCESS	CASE 1
Gas/Liquid system	Air / Water
Temperature, °F	60
Pressure, psia	13.26 = 40" H_2O Vac
Compressibility factor	1
Gas density, lb/ft³	0.069
Gas viscosity, centipoise	0.0185
Gas flow rate, acfs	9.33
Liquid density, lb/ft³	62.34
Liquid viscosity, centipoise	1.129
Fouling	No

PAD/VANE DEFINITION	
Pad style	3BF
MistMaster®	No
Pad density	7.2
Wire diameter(s)	0.006
Surface area(s)	120
Percent voids	98.6
Material	Metal

PERFORMANCE	
% Collection Eff. @ 3 µm	99.22
4 µm	99.89
5 µm	99.97
10 µm	>99.99
20 µm	>99.99
Dry pressure drop, in-water	0.5686

GEOMETRY	
Pad/vane thickness, inch	6
Pad shape	Round
Actual Dimension 1, in*	13.65 (14")
Actual Dimension 2, in**	--
Actual Capacity factor	0.3056
Actual Velocity, fps	9.183
Actual Area, ft²	1.016
Optimum Capacity factor	0.3055
Optimum Velocity, fps	9.18
Optimum Area, ft²	1.016

* Dimension 1: Diameter (round, segment); Length (rectangle)
** Dimension 2: Width (rectangle); Segment width (segment)

ITEM	QTY	DESCRIPTION	DWG. #
1A	1	CD100 PRICE PUMP; PIPING ASSEMBLY	A2-B1000

BOM# 3

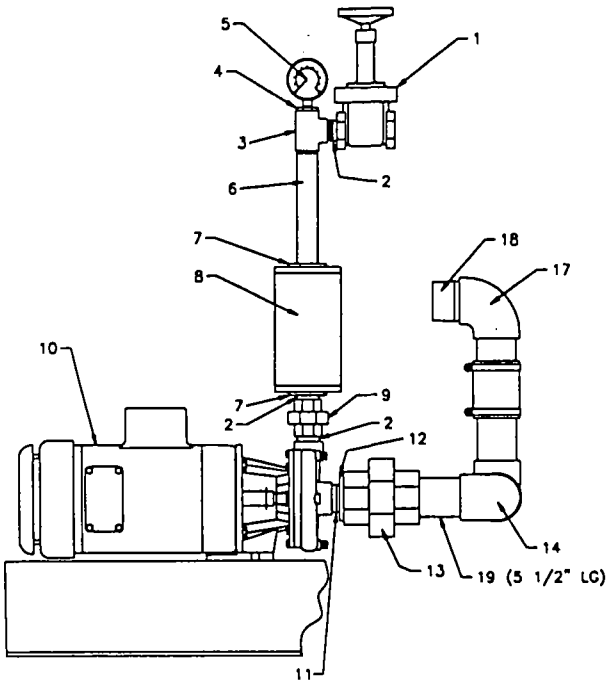

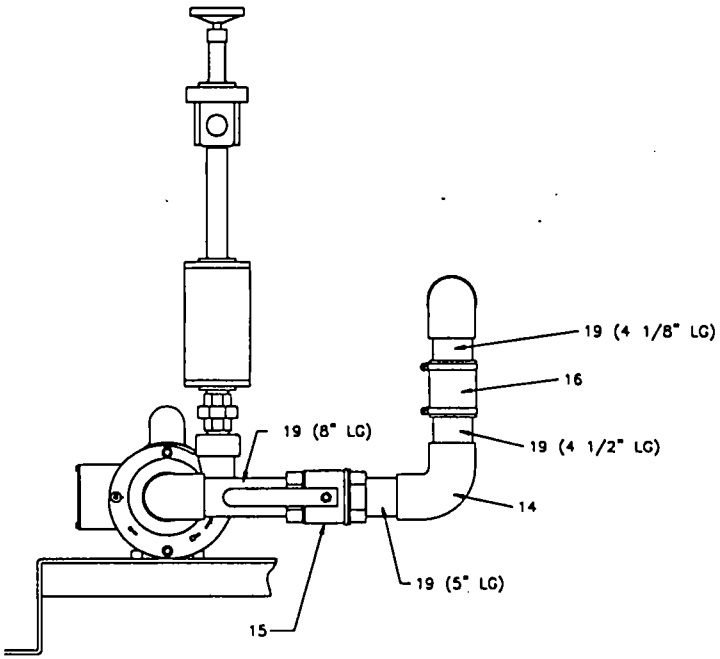

REV	DATE	DESCRIPTION

CUSTOMER

TITLE
PUMP INLET/OUTLET
PIPE ASSEMBLY

SCALE: 8 | DATE: 2/2/99 | DRAWN BY: H.R. | CHK'D BY: G.L. | PROJECT NO.: | REV: B

INCH DIM.=X.XX [X.X]=mm DIM. | DO NOT SCALE THIS DRAWING | DWG. NO. G2-A1000

ROJ. NAME: LBG DAYTON OHIO
CC PROJ. N0: 99216
ROJ. MANAGER: KARL WITTMANN

PROJ. ORDER DATE:
TARGET SHIP DATE:
BOM ISSUE DATE:

BOM# 3

G2-A1000 REF PUMP INLET/OUTLET PIPE ASS'Y

evision No. 1 of 1

em o.	Qty	CCC Part #	Description	MFG Part #	Vend. Code	P.O. #	Del. Date	Date Rec'd	Unit Cost	Ext. Cost	Actual Cost
1	1		GATE VALVE, BRASS, 1"								
2	3		NIPPLE, CLOSE, 1" GALV								
3	1		TEE, 1" GALV								
4	1		REDUCER BUSHING, HEX 1" X 1/4" NPT GALV								
5	1		GAUGE, WIKA, 9767053, 0-60 PSI TYPE 213.53								
6	1		NIPPLE, 1" X 7" LG GALV								
7	2		REDUCER BUSHING, HEX 2" X 1" NPT GALV								
8	1		CHECK VALVE, TIDEFLEX, 2" BUNA CHECK SLEEVE								
9	1		UNION, 1" GALV								
0	1		PUMP, CD100-BF-494-6A212-150-36 1.5HP 208-230/460 3PH TEFC VITON NI-RESIST SEAL #6								
1	1		NIPPLE, 1 1/4' CLOSE SCHED40 GALV								
2	1		REDUCER BUSHING, 2 X 1 1/4" GALV								
3	1		UNION, 2" SCHED 80 PVC, SLIP X FIPT SPEARS # 859-020								
4	2		ELL, 2" SCHED 80 PVC, SPEAR # 806-020								
5	1		BALL VALVE, 2" SPEAR # 2132-020								
6	1		FERNCO #3000-22 (2")								
17	1		ELL 2" SOC X FIPT SPEAR # 807-020								

BOM# 3 (cont)

em o.	Qty	CCC Part #	Description	MFG. Part #	Vend. Code	P.O. #	Del. Date	Date Rec'd	Unit Cost	Ext. Cost	Actual Cost
8	1		NIPPLE, 2" CLOSE, GALV								
9	1		PIPE, PVC 2" SCHED 80, 28" TOTAL								
0											
1											
2											
3											
4											

WIKA

Liquid-Filled Gauges

Type 213.53 2½" & 4"

- COPPER ALLOY WETTED PARTS
- STAINLESS STEEL CASE
- GLYCERINE-FILLED

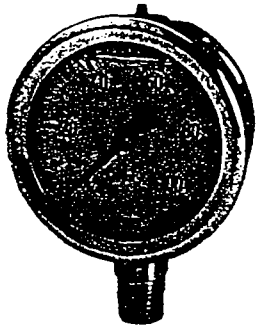

WIKA Type 213.53 gauges feature a stainless steel case for protection in harsh environments. The glycerine filling helps dampen the effects of vibration and pulsation. It also lubricates the movement which extends the life of the gauge.

BOM# 3/5

STANDARD FEATURES

Size: 2½" (63 mm)
4" (100 mm)
Case: Stainless steel
Ring: Polished SS, crimped
Wetted Parts: Copper alloy
Window: Polycarbonate (2½")
Acrylic (4")
Dial: ABS
Pointer: Black aluminum
O-ring: EPDM
Liquid Filling: Glycerine
Accuracy: ± 1.5% of span

Options Available from Inventory
Stainless steel front flange (FF)
Stainless steel rear flange (RF)
U-clamp bracket for panel mounting (UC)
Brass restrictor

ABBREVIATIONS
LM - Lower Mount
CBM - Center Back Mount
LBM - Lower Back Mount

* Items shown with part numbers are available from stock (subject to prior sale).
* Items shown without part numbers are available on special order. Minimum order quantities may apply.

STANDARD RANGES AND PART NUMBERS

Type	213.53 Liquid Filled					
Size	2½"					
Connection	LM			CBM		
Conn. Size	1/4" NPT					
Press. Scale[1]	PSI	PSI/BAR	PSI/KG/CM²	PSI	PSI/BAR	PSI/KG/CM²
30 "Hg	9767002	9691957	9693683	9767185	9692139	9693861
30"-0-15 psi						
30"-0-30 psi	9767010	9691965	9693691			
30"-0-60 psi	9767029	9691974	9693705			
30"-0-100 psi						
30"-0-160 psi						
30"-0-200psi						
15 psi	9767037	9691982	9693713			9697220
30 psi	9767045	9691990	9693721	9767193	9692147	9693879
60 psi	9767053	[illegible]	9693739	9767202	9692155	9693887
100 psi	9767061	9692015	9693747	9767215	9692164	9693895
160 psi	9767070	9692024	9693755	9767223	9692172	9693909
200 psi	9767088	9692032	9693764	9767231	9692180	9693917
300 psi	9767096	9692040	9693772	9767240	9692198	9693925
400 psi	9767100	9692058	9693780			
600 psi	9767118	9692066	9693798	9768947	9692202	9693934
800 psi						
1,000 psi	9767126	9692075	9693802	9767258	9692210	9693942
1,500 psi	9767134	9692083	9693810	9768165	9692228	9693950
2,000 psi	9767142	9692091	9693828	9768939	9692236	9693968
3,000 psi	9767150	9692105	9693836	9767266	9692245	9693976
5,000 psi	9767169	9692113	9693845	9767274	9692253	9693985
6,000 psi		9748207				
10,000 psi	9767177	9692121	9693853	9767282	9692261	9693993
15,000 psi						

[1] "PSI/BAR" denotes dual scale; PSI outside in black, BAR inside in red. "PSI/KG/CM²" denotes dual scale; PSI outside in black, KG/CM² inside in red. Note: Vacuum scale: 30"Hg outside in black; 760 mm Hg inside in red.

Series 2633

BOM# 3/8

- Eliminates check valve chatter
- Seals 100% on reverse flow
- Can be mounted in any position
- Ideal for pneumatic systems

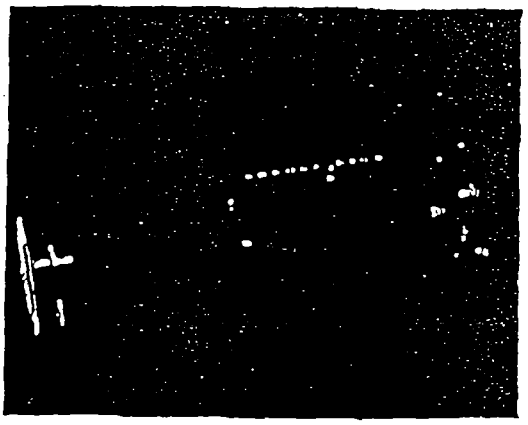

Materials of Construction

- Steel, Stainless Steel, or PVC Body
- Steel, Stainless Steel, or PVC End Connections
- Check Sleeves Available in Pure Gum Rubber, Neoprene, Hypalon, Chlorobutyl, Polyurethane, Buna-N, Viton, and EPDM

The Series 2633 is a simple in-line check valve for threaded end pipelines, and is manufactured on the same principle as Red Valve's revolutionary all rubber Tideflex® Check Valves.

The Series 2633 is simple in design: a body, two endcaps, and the working element, a special elastomer check sleeve. In the open position the sleeve creates a wide, free passage proportional to the flow in the pipeline. On flow reversal the "duck bill" shaped sleeve closes slowly and completely.

The silent, non-slamming Series 2633 Check Valve design eliminates water hammer and has low headloss. It contains no levers, packing, springs, or interference fits to corrode or freeze. The only replacement part is *the simple, rugged elastomer check sleeve, making this* valve virtually maintenance-free!

This small and simple in-line check valve is ideal for liquids, gases, powders, slurries, instrument or plant air, and in any environment where there is a need to prevent backflow.

The Series 2633 is manufactured in sizes 1/2" to 3" The check sleeve can be ordered in a variety of elastomers to match specific service conditions.

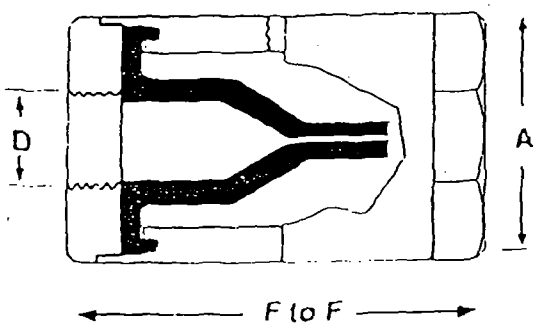

Dimensions Series 2633 Small Diameter In-Line Check Valve

Valve Size D	Length F to F'	Body O.D. A	Maximum Back Pressure (psi)	Weight Steel (lbs.)
1/2"	4 1/2"	2 3/4"	125	3
3/4"	4 1/2"	2 3/4"	125	3
1"	4 1/2"	2 3/4"	125	3
1 1/2"	6 1/2"	3 3/4"	100	8
2"	7 1/2"	4"	75	14
3"	8 1/2"	5"	75	18

Red Valve Company, Inc.

SERIES 2600/SERIES 2633

Installation, Operation, and Maintenance Manual

Red Valve's Series 2600 pinch valve and Series 2633 small diameter inline check valve are the simplest valves available to industry. They have only four parts and require little or no maintenance. These valves are designed with threaded end connections for easy installation and removal on small lines up to 2" in diameter. A spare replacement sleeve should be ordered when the valve is placed in service.

INSPECTION OF PRODUCT:

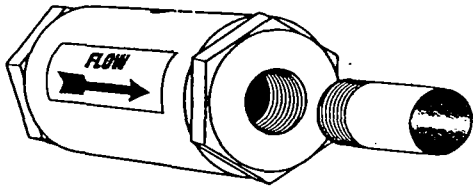

Before installing, be sure the pipe threads are clean. A sealing material such as pipe dope can be used. Direction of flow is indicated on the 2633. Be sure that it is in the proper orientation before installing.

2. TIGHTEN END CAPS

Use a wrench to tighten the valve by turning the end caps. Turning the body can damage the rubber inside. Once installed, if a small gap exists between the body and end cap, do not tighten further. This can twist the rubber flange inside and cause damage.

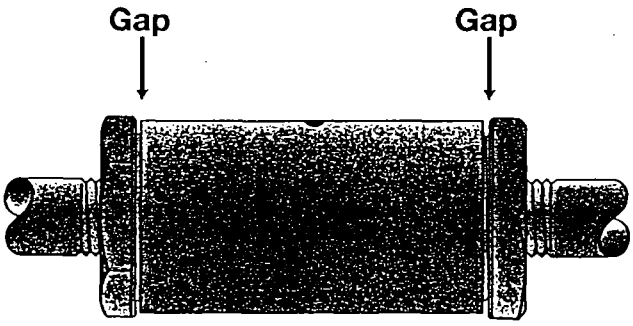

3. AIR SUPPLY PORT

BOM# 3/8

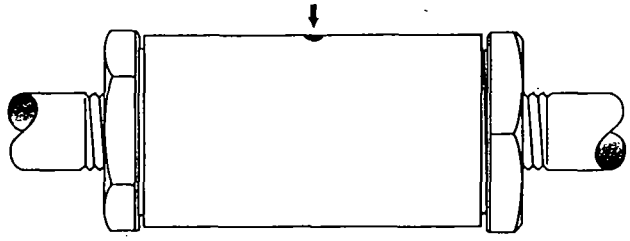

Air supply is connected to the 1/4" NPT port. This port is normally plugged on the 2633, but can be used as a drain or piped as a flush port. Use the chart below to determine the correct air pressure needed to close the 2600.

AIR CLOSING PRESSURE

Valve Size (in.)	Internal Line Pressure (psi)	Air Closing Pressure PGR (psi)	Air Closing Pressure Synthetic (psi)
1/8" — 1/2"	75	29	35
3/4" — 1"	75	31	39
1-1/4"	50	31	39
1-1/2" — 2"	50	37	44

* Note: Closing pressures are to be added to line pressure.

4. PRESSURE REGULATORS

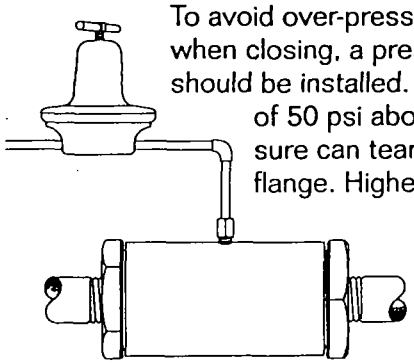

To avoid over-pressurizing the valve when closing, a pressure regulator should be installed. Pressure in excess of 50 psi above pipeline pressure can tear the rubber at the flange. Higher pressures require the sleeves to be reinforced with fiberglass short threads.

IMPORTANT

Please take time to read this manual. Read the entire installation instructions before starting installation. The improper installation or use of this product may result in personal injury, product failure, or reduced product life. Red Valve Co., Inc. can accept NO liability resulting from the improper use or installation of this product. If you have any questions or problems, please call the customer service hotline at (412) 279-0044. We appreciate your comments. And thank you for choosing Red Valve.

2600IOM-95-00

Flow to 160 GPM
Head to 100 ft.

BOM# 3/10

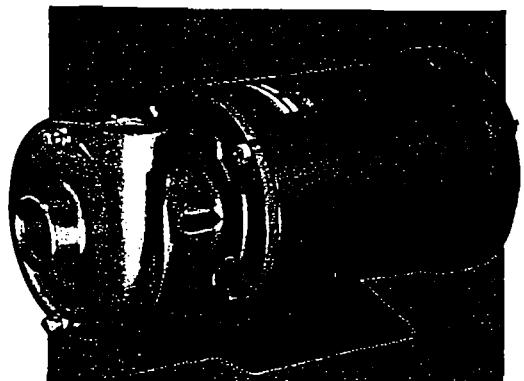

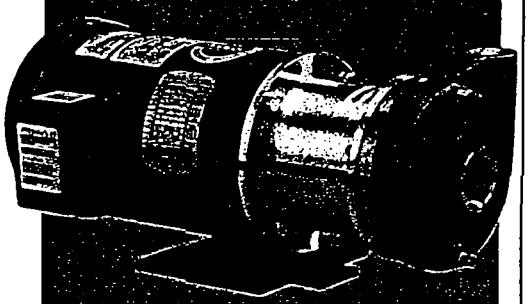

PRICE PUMP CO.
#1 Pump Way, P.O. Box Q
Sonoma, CA 95476
(707) 938-8441
FAX: (707) 938-0764

Type CD & CD-MD

(Mag Drive)

CENTRIFUGAL MOTOR PUMPS

Flows to 160 GPM
Heads to 100 ft.

SIZES

CD100 - 1" x 1¼" x 5"
CD150 - 1½" x 2" x 5"

MATERIALS

CD-SS	316 SS
CD-AI	Grey Cast Iron
CD-AB	All Bronze

FEATURES

Mechanical Sealed Pumps

- Sealed shaft
- Compact close coupled design using standard NEMA 56C motors
- Back pull-out design for easy maintenance
- **316SS** - John Crane Type 21 Viton, Carbon vs. Ceramic, standard seal
- **Iron or Bronze** - John Crane Type 6A, Buna, Carbon vs. Ceramic, standard seal
- Double Type 21 Seal option
- John Crane Type 9 Teflon seal available on both models
- Optional seal face materials and *elastomers include silicon carbide*, tungsten carbide, F31 carbon, EPR, Neoprene. (additional materials available)
- Seal flush and seal quench optional

CD-MAG DRIVE

- Optional temperature and vibration monitoring
- Optional Hard coated shaft
- Number of magnets can be varied to match HP requirements
- Optional external flush
- Wide range of bearing materials available
- 56C motors standard

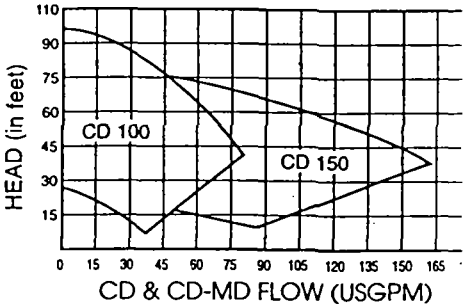

Curve for 60 Hz operation reference onl
See engineering curves for final selectio

Type CD

(For Mag Drive dimensions see reverse)

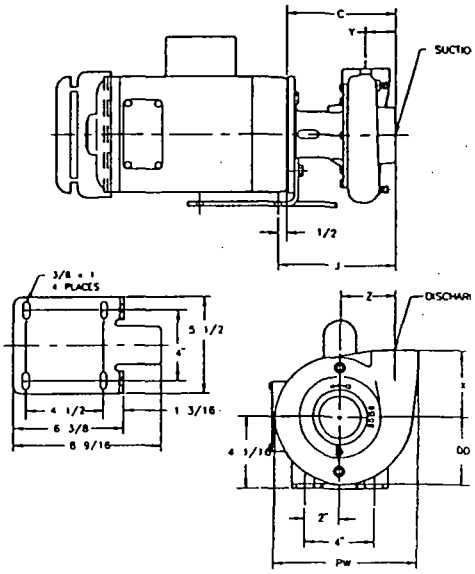

SEE REVERSE FOR MAG DRIVE DIMENSIONS

	PUMP END DIMENSIONS							PIPE THREADS IN INCH	
	C	DD	PW	X	Y	Z	J	SUCTION	DISCHARGE
CD100 SS	5 3/4 146mm	3 1/8 79mm	7" 178mm	3 1/2 89mm	1 3/8 35mm	2 3/4 70mm	8 1/4 210mm	1 1/4" NPT	1" NPT
CD150 SS	6 1/4 159mm	3 7/8 98mm	8 1/4 210mm	3 13/16 97mm	1 11/16 43mm	3 1/8 79mm	6 3/4 171mm	2" NPT	1 1/2" NPT

60 Hz

PRICE PUMP CO. SONOMA, CALIFORNIA
Ph. (707) 938-8441 Fax (707) 938-8764

CURVE NUMBER: CD001 MODEL: CD100 AI & AB SIZE: 1X1-1/4X5 RPM: 3450
IMPELLER DIA: VARIOUS MIN. IMPELLER DIA: 3.00" MAX. IMPELLER DIA: 4.94" MAX. SOLIDS:
CUSTOMER: PPCO CUSTOMER'S P.O.
REMARKS: 03-09-95

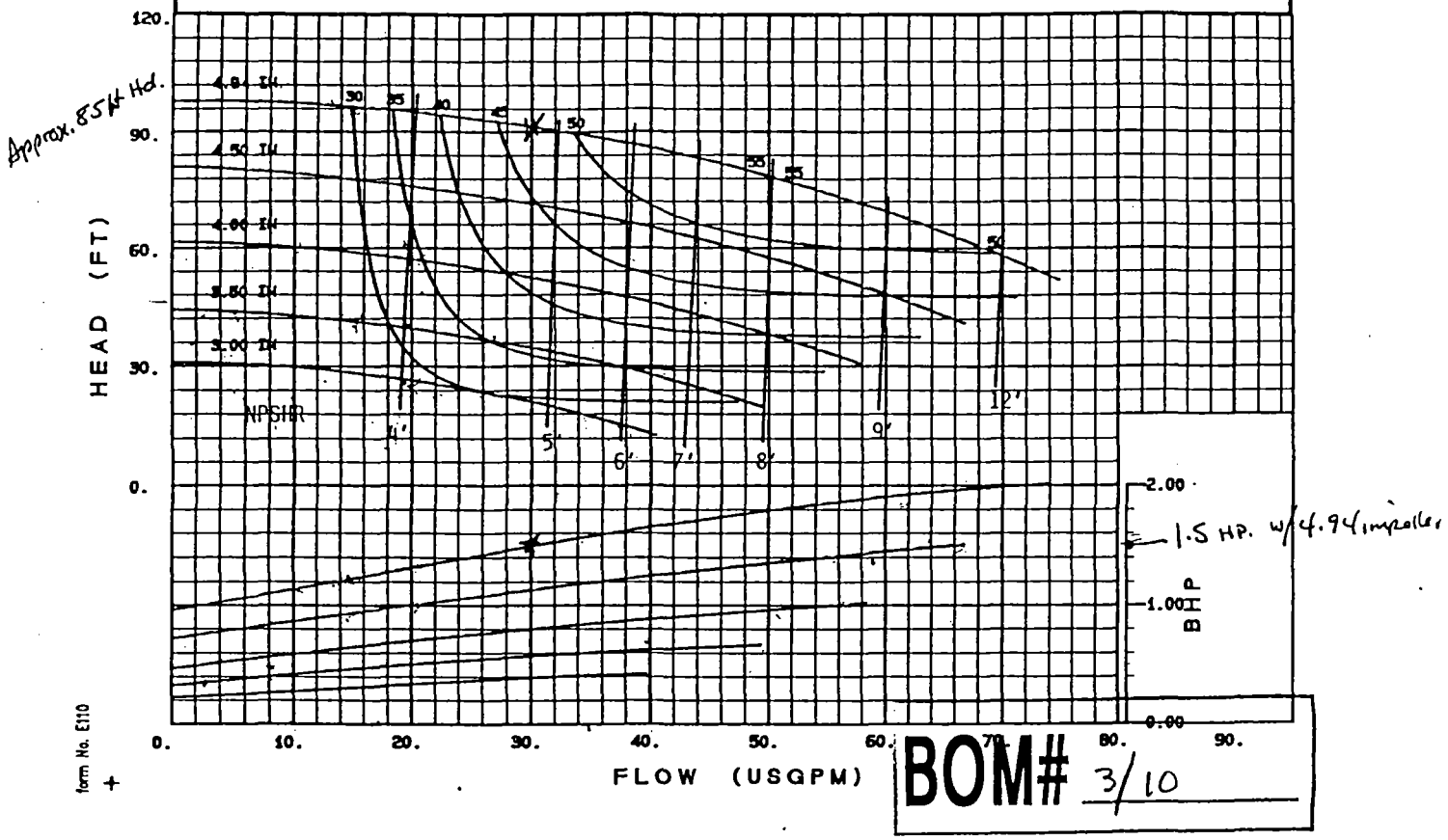

PRICE PUMP CO. SONOMA, CALIFORNIA
Ph. (707) 938-8441 Fax (707) 938-8764

CURVE NUMBER: CD003 MODEL: CD100 AI & AB SIZE: 1X1-1/4X5 RPM: 1750
IMPELLER DIA: VARIOUS MIN. IMPELLER DIA: 3.00" MAX. IMPELLER DIA: 4.94" MAX. SOLIDS:
CUSTOMER: PPCO CUSTOMER'S P.O.
REMARKS: 03-09-95

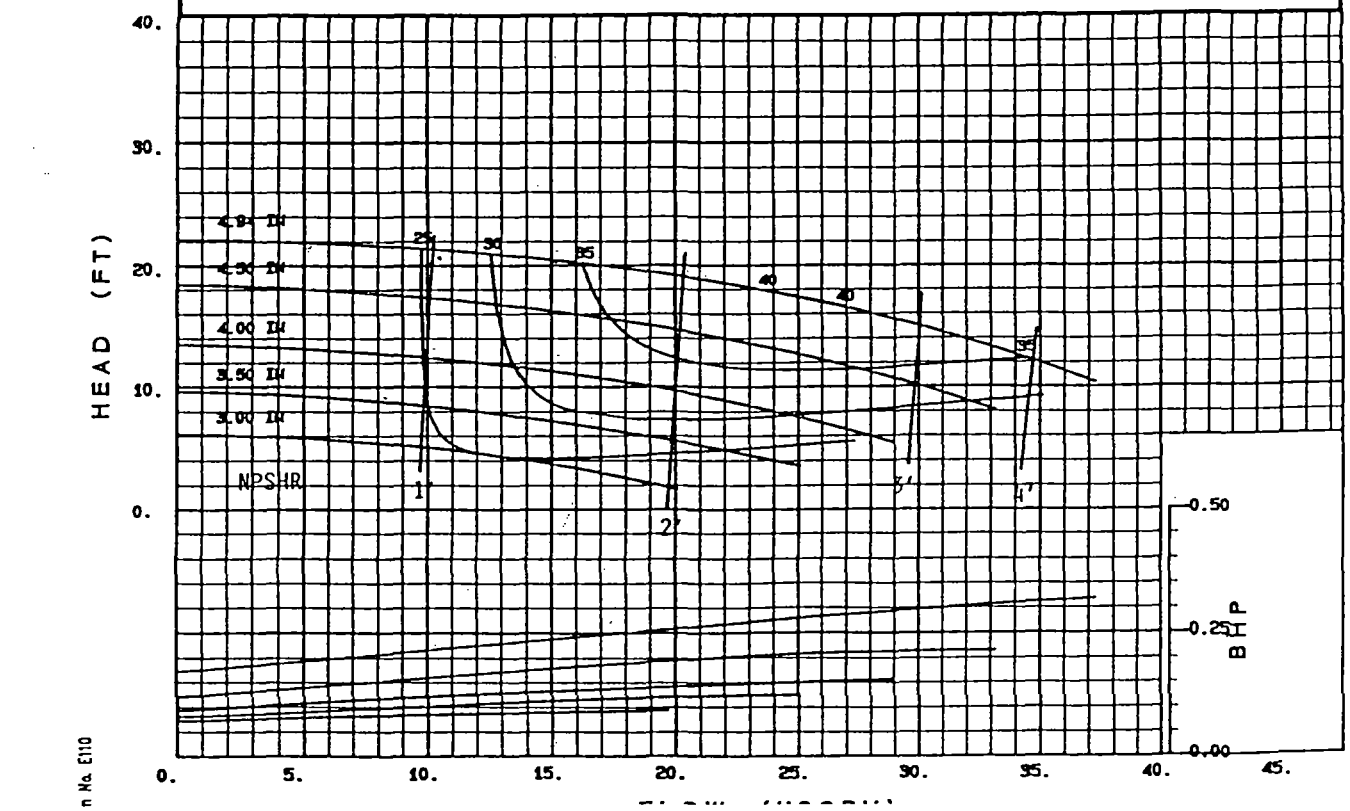

Price Pump Company

Type CD/RC
Installation, Operating and Maintance Manual

Caution:
Before installing, repairing or performing maintenance on this pump, read these instructions completely.

If pump has been used to pump hazardous materials be certain that all materials have been removed prior to working on the pump.

Warning!!
Ground motor before connection to electrical power supply!! Failure to ground motor can cause severe or fatal electrical shock hazard!!

Do not ground to gas supply line!!

Match voltage to nameplate voltage on motor. Incorrect voltage can cause fire or seriously damage motor, voiding warranty.

Before disassembling be certain all liquid is removed from the pump.

TYPE RC

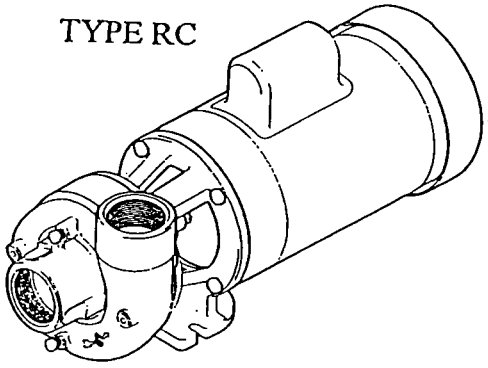

TYPE CD

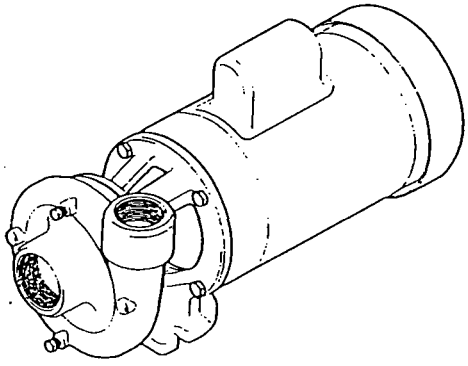

Direction of Rotation

Note: Motor shaft rotation is viewed from the suction end of pump. A rotational arrow is shown on the front of the pump volute casing. Incorrect rotation can cause pump damage, failure or reduced performance, voiding warranty. It is best to check rotation by momentarily energizing or jogging the motor prior to filling pump with liquid.

Warning! Do not operate pump without liquid for more than a few seconds, as damage will result to mechanical seal.

PLUMBING

All piping should be supported independently of the pump. Piping should not exert any stress on the pump connections.

1. Suction Piping-Horizontal Pumps.
Suction line must provide adequate suction pressure and smooth liquid flow for proper pump operation. Air entrapment in the suction line because of leaks or improper design may cause the pump to lose prime and fail. This pump is not self-priming, therefore the suction must be flooded at start up. Also, the suction line must provide sufficient pressure and smooth flow to pump inlet to prevent pump cavitation. A length of straight pipe a minimum of 5 times the pump inlet diameter and preferably 10 times the diameter should be installed in the suction line where it enters the pump. Elbows, fittings or valves installed close to the suction can disrupt liquid flow and cause malfunction. Suction lines must be at least the same size as the pump inlet or larger if possible. Price Pump Company recommends against using foot valves in the suction line to maintain liquid in the pump when it's not operating. If foot valves are used due to suction lift conditions they must be properly maintained to avoid leaks resulting from wear or fouling. Suction piping must be designed to prevent air from being trapped in high spots in the piping. This condition may cause the pump to vapor lock as the air bubble moves into the pump.

2. Discharge Piping.
For flow and discharge head control it is advisable to install a valve (globe, ball, or other adjustable and non-leak type) in the discharge line close to the pump. The valve may be closed during system repairs to prevent backflow. By installing a check valve in the discharge line backflow can also be prevented during maintenance or during periods of pump stoppage.

OPERATION

Priming. All centrifugal pumps must be filled with liquid prior to start up. For the pump illustrated in this manual completely fill the volute and suction lines prior to operation. It is suggested that during initial start up the discharge valve be closed and then opened as the motor develops full rpm's. If pump does not build up pressure as motor speed increases, shut down and reprime pump. Make sure that liquid flow into pump is not restricted (see "Troubleshooting").

Note: A centrifugal pump's flow and head (pressure) will vary with the amount of resistance (friction and flow restrictions) in the discharge line. As a valve on the discharge line opens the flow and motor amp draw will increase and head will drop. As a valve on the discharge is closed the flow and amp draw will decrease and the head will increase. If resistance in the discharge line is not sufficient the pump will operate at a condition of maximum (or "choked") flow, also sometimes called "end of performance curve." Maximum horsepower is required to operate at this point and motor overload may result. If excessive amp draw and motor overload is recurring, reduce the system flow by installing a valve on the discharge line and restricting flow. Alternatively, reduce

pump head by trimming impeller to a smaller diameter. Consult local Price Pump dealer for assistance.

CAUTION

Disconnect power to pump before servicing to avoid dangerous or fatal electrical shock hazards.

If pump has been used to pump hazardous materials be certain that all materials have been removed prior to working on the pump.
Inverting pump with liquid in it could cause liquid to get into motor bearings and cause damage. Before disassembling be certain all liquid is removed from the pump.

TROUBLESHOOTING

1. Pump fails to build pressure:

Check for:
- a. Pump not primed.
- b. Incorrect rotation.
- c. Driver speed too low.
- d. Suction line restricted.
- e. Driver failure.
- f. Plugged or damaged impeller.
- g. Pump or impeller undersized.
- h. Pump cavitation.
- i. Impeller rubbing volute.

2. Pump fails to provide enough flow.

Check for:
- a. System resistance too high.
- b. Pump undersized.
- c. Pump not primed.
- d. Driver speed too low.
- e. Poor suction conditions
- f. Impeller rubbing volute due to improper installation.
- g. Pump cavitation.
- h. Plugged or damaged impeller.

3. Excessive noise or vibration during operation.

Check for:
- a. Motor bearing failing.
- b. Pump cavitating.
- c. Impeller rubbing volute.

4. Leaking mechanical seal.

Check for:
- a. Improper assembly.
- b. Worn or cracked seal faces.
- c. Abrasive material build up around seal.
- d. Liquid flashing at seal faces (temp too high).
- e. Seal pressure rating too low for the service.
- f. Chemical attack of seal parts.
- g. Seal operated dry or with a liquid having poor lubricating properties.

4. Pump gradually loses pressure and head.

Check for:
- a. Increasing temperature causing cavitation or liquid vaporization.
- b. Driver failure.
- c. Suction lift too high.
- d. Air entering suction line.

5. Motor/pump overheating.

Check for:
- a. Excessive flow and amp draw. (Throttle discharge)
- b. Low voltage or frequency.
- c. Flow too low with resulting heat rise.
- d. Bearing failure.
- e. System temperature too high.

TYPE CD and RC Series MAINTENANCE AND REPAIR I&O IN 167

Before attempting any repairs under warranty, contact Distributor to obtain factory authorization. Repairs carried out without authorization may void warranty. Many causes of pump system failure are due to improper system design. Refer to the Trouble Shooting List in this manual before carrying out pump inspection.

DISASSEMBLY

1. Disconnect power source to motor.

2. Disconnect electrical connections tagging wires carefully to preserve correct rotation. Loosen motor base.

3. Remove pump and motor assembly to repair area.

4. Remove volute from pump.

5. Remove impeller. Unscrew and remove impeller lockdown and lockwashers. Slide impeller off shaft. Do Not throw shaft key away. *A small pair of c-clamp or standard vise grips may be clamped to the pump shaft to* prevent rotation while unscrewing impeller lockdown. Avoid damaging the set screws of the shaft with the vise grips.

6. Remove seal head from the shaft. Type 6A: remove seal head from bracket. Type 21: slide seal head from the shaft. Type 9: Loosen set screws and slide seal head off shaft.

7. Remove four motor bolts and remove bracket from motor.

8. Remove seal seat from bracket. Use wooden or plastic dowel to tap the seat from the bracket.

REASSEMBLY

1. Clean seat cavity of the bracket thoroughly.

2. Thoroughly clean pump shaft. Assure that the shaft is not grooved and that there is no evidence of pitting or fretting. If the shaft is grooved, fretted or worn, replace it.

3. Install the pump shaft onto the motor shaft, aligning set screws of the pump shaft with the keyway of the motor shaft. Ensure all debris and burrs are removed from the motor shaft and that the slinger is in place.

4. For Type 6A:

   a. Place bracket on firm surface with seat cavity (pump end) up. Using a tool (1-19/64" ID x 1-5/8" OD x 1/2" deep), press seal into seal cavity with carbon face of seal (volute end up) up. Press until flange is seated in seal cavity of bracket. Press only on outer flange of seal. Avoid touching carbon surface.
   b. Place bracket on motor (aligning the base if applicable). Secure bracket with four motor bolts.
   c. Pull out pump shaft as far as it will go toward volute end and slightly snug one set screw to hold shaft in place.
   d. Apply small amount of vegetable oil on the pump shaft and ID of seal elastomer. Gently place seat on end of shaft with ceramic face down toward seal. After sliding impeller onto shaft, seat will be properly located.
   e. Slide impeller onto shaft ensuring seat is pushed flush with shoulder of shaft and impeller hub.
   f. Install shaft key, impeller flatwasher, lockwashers and lockdown bolt. Tighten securely. (10 ft. lbs.)

Caution:
Serviceable Loctite must be used on lockdown bolt. Lockwasher pairs must be assembled cam face to cam face. See Diagram A

   g. Loosen pump shaft set screw.
   h. Install new volute gasket/o-ring and mount volute to bracket. Secure with bolts and tighten evenly.
   i. Setting impeller clearance: Slide pump shaft forward until impeller touches volute. Slide shaft back .010-.015". Tighten pump shaft set screws. Turn shaft by hand to ensure impeller does not rub against volute.

   Lockwasher pairs assembled cam face to cam face.

Diagram A

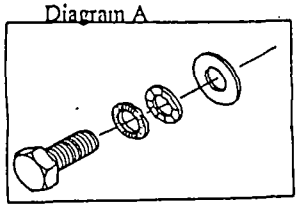

5. For Type 21, 8, 9 seals:

   Place the bracket on a firm surface with the seat cavity (pump end) up. Then place a small amount of vegetable oil on the seat cup or o- ring seat. Place the seat in the seat cavity with the polished face up toward the pump end. Evenly push seat into cavity with fingers then gently tap seat into place with a wooden dowel or plastic rod (1-1/8" outside diameter). To help ensure the seat is not damaged place the cardboard disk supplied with the seal over the seat face.

6. Place bracket on motor (aligning the base if applicable). Secure bracket with four motor bolts.

7. Pull out pump shaft as far as it will go toward volute end and slightly snug one set screw to hold shaft in place.

8. Install seal head assembly

   For Type 21 Seals:

   a. Lubricate shaft and elastomer with vegetable oil.
   b. Install rotary seal head onto pump shaft and slide toward seat until carbon face touches seal seat.
   c. Install seal spring and retainer.
   d. Install impeller. Install key in pump shaft. Slide impeller onto shaft ensuring that the spring retainer does not slip between the shoulder of the shaft and the hub of the impeller. Install impeller flatwasher, lockwashers and lockdown bolt. Tighten securely. (10 ft. lbs.)

Caution:
Serviceable Loctite must be used on lockdown bolt. Lockwasher pairs must be assembled cam face to cam face. See Diagram A

   e. Loosen pump shaft set screw.
   f. Install new volute gasket/o-ring and mount volute to bracket. Secure with bolts and tighten evenly.
   g. Slide pump shaft forward until impeller touches volute. Slide shaft back with a screwdriver .010-.015". Tighten pump shaft set screws. Turn shaft by hand to ensure impeller does not rub against volute.

   For Type 8 & 9 Seals:

   a. Install impeller. Install key in pump shaft. Slide impeller onto shaft and install impeller washer and lockdown bolt. Tighten securely.
   b. Install new volute gasket/o-ring and mount volute to bracket. Tighten at least two bolts at this time.
   c. Slide pump shaft forward until impeller touches volute. Slide shaft back .010"-.015". Tighten pump shaft set screws. Turn shaft by hand to make sure impeller does not rub against volute.
   d. Remove volute and impeller.
   e. Install seal head onto pump shaft sliding gently past shoulder of shaft. Slide seal head toward seat until carbon face contacts ceramic seat. Tighten seal head setscrews to pump shaft. Remove clips in seal head and discard.
   j. Reinstall impeller, flatwasher, lockwashers and lockdown bolt. Tighten securely. (10 ft. lbs.)

Caution:
Serviceable Loctite must be used on lockdown bolt. Lockwasher pairs must be assembled cam face to cam face. See Diagram A

   k. Install new volute gasket and mount volute to bracket. Secure with bolts and tighten evenly.
   l. Rotate pump shaft by hand to make sure impeller does not rub against volute.

9. Return pump to installation, reconnect electric connections.

10. Start pump momentarily to observe shaft rotation. If rotation corresponds to the rotation arrow, pump may be put into service. If rotation is incorrect, switch any two leads on 3-phase motors. Check wiring diagram of motor for single phase rotation.

11. Remove top pipe plug (if applicable) from the front of volute and prime pump thoroughly, making sure all air is purged.

12. Start pump allowing adequate time to purge all air from system. Observe any gauges, flow meters, etc. to see of pump performs properly.

PRICE PUMP CO.

CD (AI, AB, CIBF) Parts List

Effective: January 21, 1997

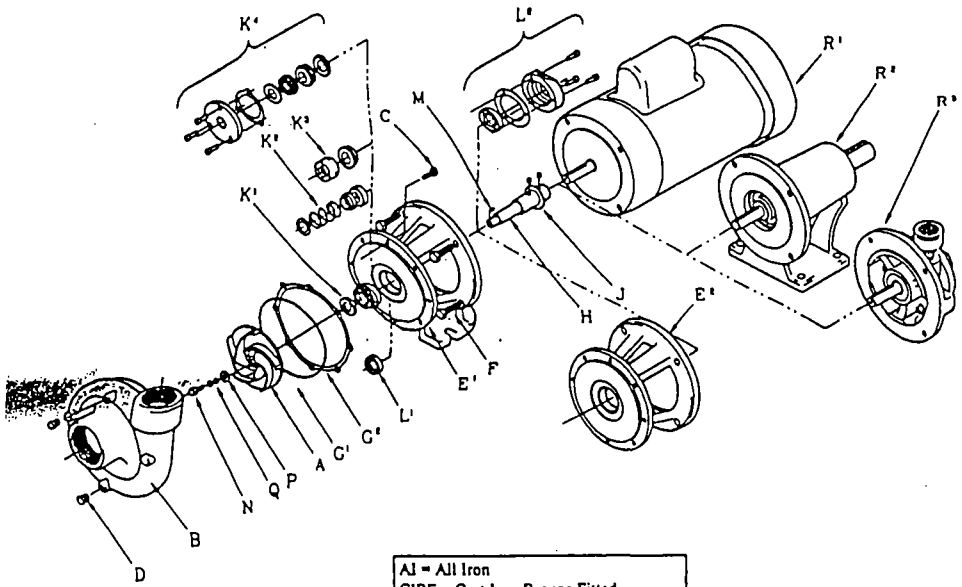

AI = All Iron
CIBF = Cast Iron Bronze Fitted
AB = Bronze

		CD100AI	CD100CIBF	★CD100AB	★CD150AI	★CD150CIBF	★CD150AB
A.	Impeller						
	Part No.-Specify diameter	2402-dia	2404-dia	2404-dia	2408-dia	2410-dia	2410-dia
B.	Volute	2401	2401	2403-0	2407-0	2407-0	2409-0
C.	Volute Bolts	0373 (4 rqd)	0373 (4 rqd)	0376 (4 rqd)	0373 (8 rqd)	0373 (8 rqd)	0376 (4 rqd)
D.	1/8" Pipe Plugs (2 rqd)	0557	0557	0558	0557	0557	0558
E¹.	Bracket - with Foot	2426	2426	2400	2426	2426	2400
E².	Bracket - without Foot	2428	2428	2440	2428	2428	2440
F.	Motor Bolts (4 rqd)	0588	0588	0592	0588	0588	0592

★ These Models Use an O-Ring Volute Flange Gasket (G¹)

Continued

CD (AI, AB, CIBF) Parts List
Continued

		Part No.
G¹.	O-Rings (for Volute Flange)	
	Buna (std) Material same as seal	3074
	Fluorocarbon "	3070
	PTFE "	3071
	Neoprene "	3072
	EPR "	3073
G².	Gasket, Syn Fiber for CD100AI &BF Only	0506

		Part No. All Models
H.	Shaft w/ setscrews with 5/8" ID	2421-1
	Shaft w/ setscrews with 7/8" ID	2422-1
J.	Slinger	0522
	Seal with Seat	
K¹.	T.6A Buna (std)	0538
	T.6A Fluorocarbon	0539
	T.6A Neoprene w/ NiResist Seat	0675
K².	T.21 Fluorocarbon (opt)	0553
K³.	T.9 Single PTFE (opt)	1150
K⁴.	Double Seal/Seat (opt)	
	T.21 Fluorocarbon (2 rqd)	0985
	T.21 Neoprene (2 rqd)	0984
	T.21 EPR (2 rqd)	1023
	Double Seal Plate	0973
	Plate Gasket, PTFE	0974
	Plate Bolts (3 rqd)	0256
L¹.	Fluorocarbon T.6A Quench Lip Seal	0899
L².	T.21 Quench Opt. (for 5/8" shaft pumps only)	
	Quench Plate	0308
	Plate Gasket, Syn Fiber	0504
	Plate Bolts (3 rqd)	0267
	Fluorocarbon Lip Seal	0891
M.	Impeller Lockdown Key	2424
N.	* Impeller Lockdown Bolt	0575
P.	Impeller Flat Washer	2423
Q.	* Impeller Lockwashers (2 rqd)	2344
R¹.	Motor - Specify P/N	
R².	Power Frames	
	For Use with 5/8" ID Shafts	5478
	For Use with 7/8" ID Shafts	5501
R³.	Air Motor - Specify P/N	

* New Lockdown Assembly Parts Used After 01/10/97

CD (AI, AB, CIBF) Repair Parts Kit

P/N 2222 For 5/8" shaft pumps Includes: 5/8" Shaft w/ SS, Slinger, Impeller Lockdown Bolt, Impeller Flat Washer, Lockwashers (2), and Impeller Lockdown Key.
Must Select Gasket or O-ring Separately See Notes Below

P/N 2222-1 For 7/8" shaft pumps Includes: 7/8" Shaft w/ SS, Slinger, Impeller Lockdown Bolt, Impeller Flat Washer, Lockwashers (2), and Impeller Lockdown Key
Must Select Gasket or O-ring Separately See Notes Below

Note: Specify O-ring or Gasket P/N and order separately in addition to kit.

Fluorocarbon (std)	P/N 3070
Buna	P/N 3074
PTFE	P/N 3071
Neoprene	P/N 3072
EPR	P/N 3073
Gasket, Syn. Fiber	P/N 0506

Note: Seal/Seat must be ordered in addition to kit.
5/8" T.6A Buna Seal (std). Options: 5/8" T.21 Single seal T.9 Single and T.21 Double seal.
5/8" Double T.9 not available

(CDPrtsA.) doc Page 17)

PRICE PUMP CO.

CD SS Parts List

Effective: January 21, 1997

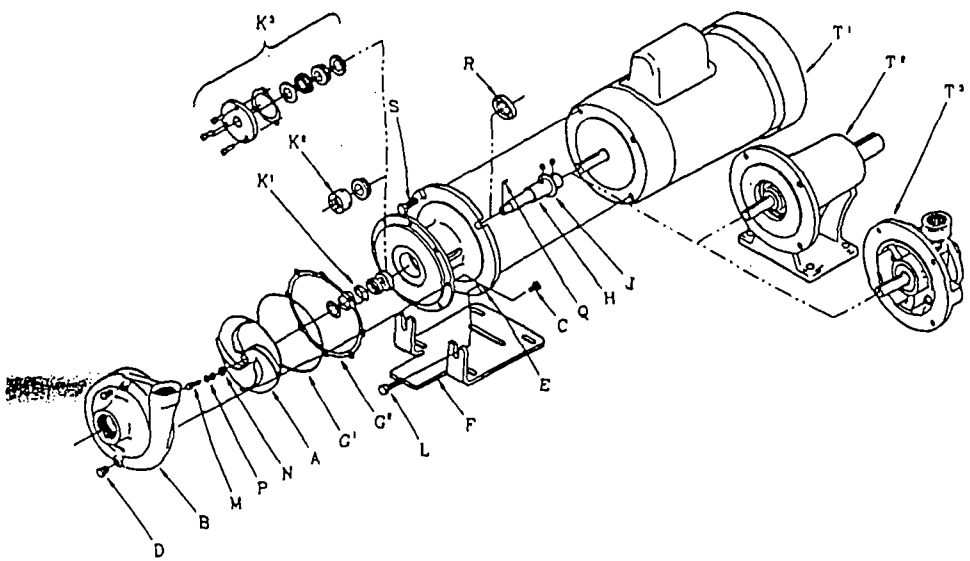

	CD100SS	★CD150SS
A. Impeller		
Part No.-diameter	2448-4.94	2412-4.94
	2448-4.50	2412-4.50
	2448-4.25	2412-4.25
	2448-4.00	2412-4.00
	2448-3.62	2412-3.62
B. Volute	0247	2411-0
C. Volute Bolts	0917 (8 rqd)	0917 (8 rqd)
D. 1/8" Pipe Plugs (2 rqd)	0559	0559
E. Bracket	0972	0972
F. Base Plate	0199	0199

	CD100SS	★CD150SS
G¹. O-ring (for Volute Flange)		
Fluorocarbon (std)	Material same as seal	3070
Buna	"	3074
PTFE	"	3071
Neoprene	"	3072
EPR	"	3073
G². Gasket, PTFE (for CD100SS Only)	0507	

★ These Models Use an O-Ring Volute Flange Gasket (G¹)

Continued

CD SS Parts List

Continued

	Part No. All Models
H. Shaft w/ setscrews w/ 5/8" ID	2421-1
Shaft w/ setscrews w/ 7/8" ID	2422-1
J. Slinger	0522
Seal with Seat	
K¹. T.21 Fluorocarbon (std)	0553
K². T.9 Single PTFE (opt)	1150
K³. Double Seal/Seat (opt)	
T.21 Fluorocarbon (2 rqd)	0985
T.21 Neoprene (2 rqd)	0984
T.21 EPR (2 rqd)	1023
Double Seal Plate	0973
Plate Gasket, PTFE	0974
Plate Bolts (3 rqd)	0256

	Part No. All Models	
L.	Motor Bolts (2 Rqd)	0673
M.	* Impeller Lockdown Bolt	0575
N.	Impeller Flat Washer	2423
P.	* Impeller Lockwashers (2 rqd)	2344
Q.	Impeller Lockdown Key	2424
R.	Fluorocarbon Quench Lip Seal (for 5/8" ID Shaft Pumps only)	0891
S.	Motor Bolts (2 Rqd)	0593
T¹.	Motor - Specify P/N	
T².	Power Frames	
	For Use with 5/8" ID Shafts	5478
	For Use with 7/8" ID Shafts	5501
T³.	Air Motor - Specify P/N	

* New Lockdown Assembly Parts Used After 1/10/97

CD SS Repair Parts Kit

P/N 2205 — For 5/8" shaft pumps Includes: 5/8" Shaft w/ SS, Slinger, Impeller Lockdown Bolt, Impeller Lockwashers (2), and Impeller Lockdown Key.
Must Select Gasket or O-ring Separately

P/N 2205-1 — For 7/8" shaft pumps Includes: 7/8" Shaft w/ SS, Slinger, Impeller Lockdown Bolt, Impeller Lockwashers (2), and Impeller Lockdown Key.
Must Select Gasket or O-ring Separately

Note: Specify O-ring or Gasket P/N and order separately in addition to kit.

Fluorocarbon (std)	P/N 3070
Buna	P/N 3074
PTFE	P/N 3071
Neoprene	P/N 3072
EPR	P/N 3073
Gasket, PTFE (CD100SS pumps only)	P/N 0507

Note: Seal/Seat must be ordered in addition to kit.
5/8" T.21 Fluorocarbon Seal (std). Options: 5/8" T.9 Single and T.21 Double seal.
5/8" Double T.9 not available

PRICE PUMP CO.

RC PARTS LIST

Keyed Impeller Version

Effective: June 24, 1996

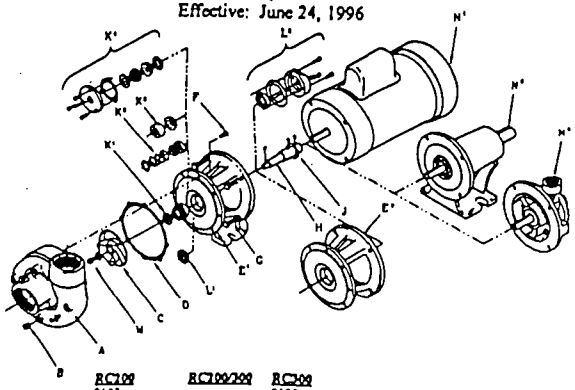

		RC200	RC200/300	RC300
A.	Volute	0183		0120
B.	1/8" Pipe Plugs (2 rqd)		0557	
C.	Impeller Specify diameter			
	All Iron (Keyed)	4184-dia		4230-dia
	CIDF (Keyed)	4128-dia		4119-dia
D.	Gasket, Syn Fiber		0506	
E1.	Bracket with Foot		2426	
E2.	Optional Bracket without Foot		2428	

		RC200/300
F.	Volute Bolts (8 rqd)	0573
G.	Motor Bolts (4 rqd)	0588
H.	Shaft w/ setscrews (56C motor) 5/8" ID (Keyed)	2421-1
	Optional Shaft w/ setscrews 7/8" ID (Keyed) (For 143TC, 145TC, 182C, 184C motors)	2422-1
J.	Slinger (For 5/8" shaft pumps only) Seal with Seat:	0522
K1.	T.6A Buna (std)	0538
K2.	T.21 Fluorocarbon (opt)	0553
K3.	T.9 PTFE (opt)	1150
K4.	Double Seal/Seat (opt):	RC200/300
	T.21 Fluorocarbon (2 rqd)	0985
	T.21 Neoprene (2 rqd)	0984
	T.21 EPR (2 rqd)	1023
	Double Seal Plate	0973
	Plate Gasket, PTFE	0974
	Seal Plate Cover Bolts (3 rqd)	0256
L1.	T.6A Quench Lip Seal, Fluorocarbon	0899
L2.	T.21 Quench Opt (For 5/8" shaft pumps only)	
	Quench Plate	0308
	Plate Gasket, Syn Fiber	0504
	Plate Bolts (3 rqd)	0267
	Fluorocarbon Lip Seal	0891
M.	Impeller Lockdown	0917
	Impeller Lockdown Key	2424
	Impeller Lockdown Washer	2423
N1.	Motor - Specify P/N	
	Note: For 5 HP 184C or other footed motors, Use Footless Bracket PN 2428	
N2.	Power Frames	
	For use with 5/8" ID Shaft	5478
	For use with 7/8" ID Shaft	5501
N3.	Air Motor - Specify P/N	

RC Repair Parts Kit

P/N 2204 for 56C 5/8" Keyed shaft
P/N 2204-1 for 56C 7/8" Keyed shaft
Includes: Gasket Syn. Fiber, Keyed Shaft w/ SS, Slinger
Impeller Lockdown, Impeller Lockdown Washer, Impeller Key
For Threaded Repair Kits See Threaded Version Parts List
Note: Seal/Seat must be ordered in addition to kit.
5/8" T.6A Buna Seal (std). Options: 5/8" T.21 Single seal and T.21 Double seal. 5/8" Double T.9 not available.

See RC "Threaded Impeller" Version Parts List for RC Pumps ordered before May, 1995, with threaded impellers.

(RCParts3.doc Book 96)

PRICE PUMP CO.

RC PARTS LIST

Threaded Impeller Version

Before May 1995

Effective: June 3,

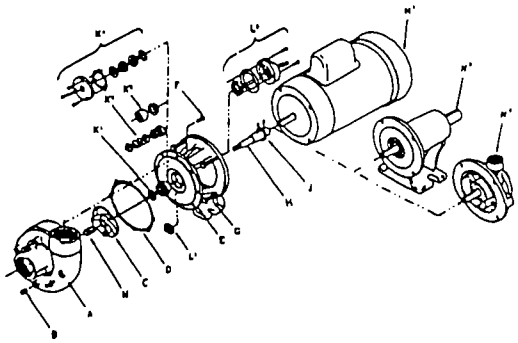

		RC200/300
F.	Volute Bolts (8 rqd)	0573
G.	Motor Bolts (4 rqd)	0588
H.	Shaft with setscrews (56C motors) 5/8" ID	0269-1
	Shafts include: 2 half dog setscrews	0566
	Optional shaft w/setscrews 7/8" ID (For 143TC, 145TC, 182C, 184C motors)	0268-1
	Shafts include 2 half dog setscrews	0566
J.	Slinger (For 5/8" shaft pumps only) Seal with Seat:	0522
K1.	T.6A Buna (std)	0538
K2.	T.21 Buna (opt)	0841
K3.	T.9 PTFE (opt)	1150
L1.	T.6A Quench Lip Seal, Fluorocarbon	0899
L2.	T.21 Quench Opt (For 5/8" shaft pumps only)	
	Quench Plate	0308
	Plate Gasket, Syn Fiber	0504
	Plate Bolts (3 rqd)	0267
	Fluorocarbon Lip Seal	0891
M.	Impeller Lockdown	0412
N1.	Motor - Specify P/N	
N2.	Power Frames	
	For use with 5/8" ID Shaft	5478
	For use with 7/8" ID Shaft	5501
N3.	Air Motor - Specify P/N	
K4.	Double Seal/Seat (opt)	
	Double Seal Plate	0973
	Plate Gasket, PTFE	0974
	Seal Plate Cover Bolts (3 rqd)	0256
	T.21 Double Seal	Specify P/N

RC Repair Parts Kit

P/N 2067 for 56C 5/8" shaft
P/N 2067-1 for 143TC-184 7/8" shaft
Includes: Gasket Syn. Fiber, Threaded Shaft w/ SS, Slinger
Note: Seal/Seat must be ordered in addition to kit.
5/8" T.6A Buna Seal (std). Options: 5/8" T.21 Single seal and T.21 Double seal. 5/8" Double T.9 not available

(RCParts doc Book 96)

General Terms Of Sale For Products

1. GENERAL

A. Seller's price is based on these sales terms and (i) this document together with any additional writings signed by Seller shall represent the final, complete and exclusive statement of the agreement between the parties and may not be modified, supplemented, explained or waived by parol evidence, Buyer's purchase order, a course of dealing, Seller's performance or delivery, or in any other way except in writing signed by an authorized representative of Seller, and (ii) these terms are intended to cover all activity of Seller and Buyer hereunder, including sales and use of products, parts and work and all related matters (references to products include parts and references to work include construction, installation and start-up). Any reference by Seller to Buyer's specifications and similar requirements are only to describe the products and work covered hereby and no warranties or other terms therein shall have any force of effect. Catalogs, circulars and similar pamphlets of the Seller are issued for general information purposes only and shall not be deemed to modify the provisions hereof.

B. The agreement formed hereby and the language herein shall be construed and enforced under the Uniform Commercial Code as in effect in the State of California on the date hereof.

2. TAXES

Any sales, use or other similar type taxes imposed on this sale or on this transaction are not included in the price. Such taxes shall be billed separately to the Buyer. Seller will accept a valid exemption certificate from the Buyer if applicable; however, if an exemption certificate previously accepted is not recognized by the governmental taxing authority involved and the Seller is required to pay the tax covered by such exemption certificate, Buyer agrees to promptly reimburse Seller for the taxes paid.

3. PERFORMANCE, INSPECTION AND ACCEPTANCE

A. Unless Seller specifically assumes installation, construction or start-up responsibility, all products shall be finally inspected and accepted within thirty (30) days after arrival at point of delivery. Products not covered by the foregoing and all work shall be finally inspected and accepted with thirty (30) days after completion of the applicable work by Seller. All claims whatsoever by Buyer (including claims for shortages) excepting only those provided for under the WARRANTY AND LIMITATION OF LIABILITY and PATENTS Clauses hereof must be asserted in writing by Buyer within said thirty (30) day period or they are waived. If this contract involves partial performance, all such claims must be asserted within said thirty (30) day period for each partial performance. There shall be no revocation of acceptance. Rejection may be only for defects substantially impairing the value of products or work and Buyer's remedy for lesser defects shall be those provided for under the WARRANTY AND LIMITATION OF LIABILITY Clause.

B. Seller shall not be responsible for non-performance or for delays in performance occasioned by any causes beyond Seller's reasonable control, including, but not limited to, labor difficulties, delays of vendors or carriers, fires, governmental actions, or shortages of material, components, labor, or manufacturing facilities. Any delays so occasioned shall affect a corresponding extension of Seller's performance dates which are, in any event, understood to be approximate. In no event shall Buyer be entitled to incidental or consequential damages for late performance or for a failure to perform. Seller reserves the right to make partial shipments and to ship products, parts or work which may be completed prior to the scheduled performance date.

C. In the event that Seller has agreed to mount motors, turbines, gears, or other products which are not manufactured by Seller and which are not an integral part of Seller's manufactured product, and a delay in the delivery of such products to Seller occurs that will cause a delay in Seller's performance date, Seller reserves the right to ship its product upon completion of manufacture and to refund an equitable portion of the amount originally included in the purchase price for mounting without incurring liability for non-performance.

D. Seller reserves to itself the right to change its specifications, drawings and standards if such changes will not impair the performance of its products, and parts, and further that such products, and parts, will meet any of Buyer's specifications and other specific product requirements which are a part of this agreement.

E. The manufacture and inspection of products and parts shall be to Seller's Engineering and Quality Assurance standards plus such other inspections, tests of documentation as are specifically agreed to by Seller. Requirements for any additional inspection, tests, documentation, or Buyer witness of manufacture, test, and/or inspection shall be subject to additional charges.

4. TITLE AND RISK OF LOSS

Title and risk of loss shall pass to buyer upon delivery of products at the designated Ex Works place (Incoterms 1990) unless otherwise agreed by the parties. See Reverse

5. EROSION AND CORROSION

It is specifically understood that products and parts sold hereunder are not warranted for operation with erosive or corrosive fluids. No product or part shall be deemed to be defective by reason of failure to resist erosive or corrosive action of any fluid and Buyer shall have no claim whatsoever against Seller therefore.

6. WARRANTY AND LIMITATION OF LIABILITY.

A. Seller warrants only that its product and parts, when shipped, and its work (including installation, construction and start-up), when performed will meet all applicable specifications and other specific product and work requirements (including those of performance), if any, of this agreement, and will be free from defects in materials and workmanship. With respect to products, parts and work not manufactured or performed by Seller, Seller's only obligation shall be to assign to Buyer, to the extent possible, whatever warranty Seller requires from the manufacturer. All claims for defective products or parts under this warranty must be made in writing immediately upon discovery and, in any event, within one (1) year after initial start-up or eighteen (18) months after shipment, whichever first occurs, and all claims for defective work must be made in writing immediately upon discovery and in any event, within one (1) year of completion thereof by Seller. Defective items must be held for Seller's inspection and returned to the original f.o.b. point upon request. THE FOREGOING IS EXPRESSLY IN LIEU OF ALL OTHER WARRANTIES WHATSOEVER, EXPRESS, IMPLIED AND STATUTORY, INCLUDING WITHOUT LIMITATION MERCHANTABILITY AND FITNESS.

B. Upon Buyer's submission of a claim as provided above and its substantiation, Seller shall at its option either (i) repair or replace its product, part or work at the original place of delivery, or (ii) refund an equitable portion of the purchase price.

C. THE FOREGOING IS SELLER'S ONLY OBLIGATION AND BUYER'S EXCLUSIVE REMEDY FOR BREACH OF WARRANTY AND, EXCEPT FOR GROSS NEGLIGENCE, WILLFUL MISCONDUCT, AND REMEDIES PERMITTED UNDER THE PERFORMANCE, INSPECTION AND ACCEPTANCE AND THE PATENTS CLAUSES HEREOF, THE FOREGOING IS BUYER EXCLUSIVE REMEDY AGAINST SELLER FOR ALL CLAIMS ARISING HEREUNDER OR RELATING HERETO WHETHER SUCH CLAIMS ARE BASED ON BREACH OF CONTRACT, TORT (INCLUDING NEGLIGENCE) OR OTHER THEORIES. BUYER'S FAILURE TO SUBMIT A CLAIM AS PROVIDED ABOVE SHALL SPECIFICALLY WAIVE ALL CLAIMS FOR DAMAGES OR OTHER RELIEF, INCLUDING BUT NOT LIMITED TO CLAIMS BASED ON LATENT DEFECTS. IN NO EVENT SHALL BUYER BE ENTITLED TO INDIRECT, SPECIAL, INCIDENTAL OR CONSEQUENTIAL DAMAGES, NOR FOR DAMAGES FOR LOSS OF USE, LOST PROFITS OR REVENUE, INTEREST, LOST GOODWILL, WORK OR PRODUCTION STOPPAGE, IMPAIRMENT OF OTHER GOODS, INCREASED EXPENSES OF OPERATION, OR THE COST OF PURCHASING REPLACEMENT POWER OR OTHER SERVICES BECAUSE OF SERVICE INTERRUPTIONS. FURTHERMORE, IN NO EVENT SHALL SELLER'S TOTAL LIABILITY FOR DAMAGES OF BUYER EXCEED THE PURCHASE PRICE OF THE PRODUCTS OR PARTS MANUFACTURED BY SELLER AND UPON WHICH SUCH LIABILITY IS BASED. ANY ACTION ARISING HERE-UNDER OR RELATED TO HERETO, WHETHER BASED ON BREACH OF CONTRACT, TORT (INCLUDING NEGLIGENCE) OR OTHER THEORIES, MUST BE COMMENCED WITHIN ONE (1) YEAR AFTER THE CAUSE OF ACTION ACCRUES OR IT SHALL BE BARRED.

7. PATENTS

Seller agrees to assume the defense of any suit for infringement of any patents brought against Buyer to the extent of such suit charges infringement of an apparatus or product claim by Seller's product in an of itself, provided (i) said product is built entirely to Seller's design, (ii) Buyer notifies Seller in writing of the filing of such suit within ten (10) days after the service of process thereof, and (iii) Seller is given complete control of the defense of such suit, including the right to defend, settle and make changes in the product for the purpose of avoiding infringement of any process or method claims, unless infringement of such claims is the result of following specific instruction furnished by Seller.

8. EXTENT OF SUPPLY

Only products and listed in Seller's proposal are included in this agreement. It must not be assumed that Seller has included anything beyond same.

9. MANUFACTURING SOURCES

To maintain delivery schedules, Seller reserves the right to have all or any part of the Buyer's order manufactured at any of Seller's or its licensee's plants on a worldwide basis.

(Terms3-93Bob)

BOM# 4

ITEM	QTY	DESCRIPTION	SIZE	MTRL.
1	1	NIPPLE	1 1/2" x CLOSE (1 3/4")	GALV.
2	1	90 DEG. ELBOW	1 1/2" FIPT	GALV.
3	1	NIPPLE	1 1/2" x 6"	GALV.
4	1	BALL VALVE	1 1/2" FIPT	BRASS

MATERIAL: GALV. UNLESS OTHERWISE SPECIFIED

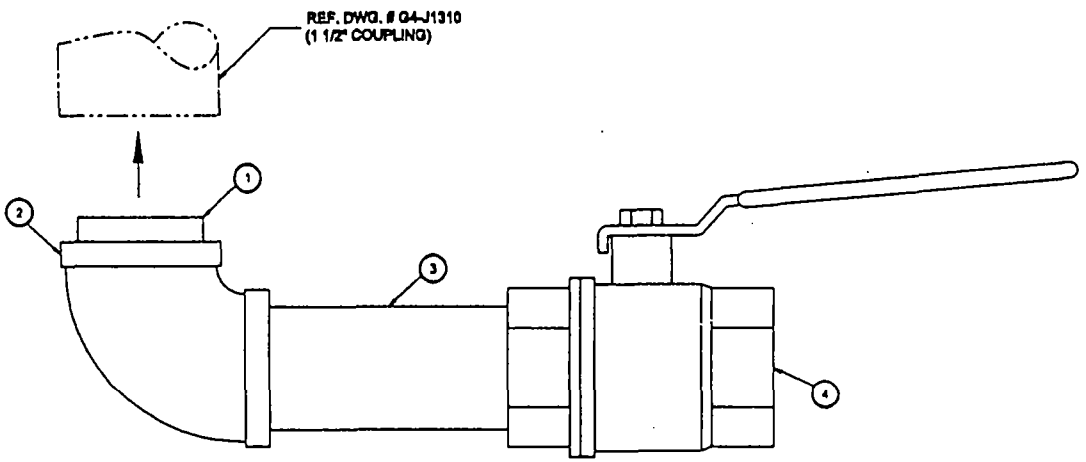

CATALYTIC COMBUSTION

TITLE: 1 1/2" DRAIN ASSEMBLY

SCALE 1:2 | DATE 10/17/96 | DRAWN BY: R.R. | DWN BY: G.U.

DO NOT SCALE THIS DRAWING | DWG. NO. G6-A1001 | B

ROJ. NAME:
CC PROJ. N0:
ROJ. MANAGER:

BOM# 4

PROJ. ORDER DATE:
TARGET SHIP DATE:
BOM ISSUE DATE:

evision No. 1 of 1 REF G6-A1001

em o.	Qty	CCC Part #	Description	MFG Part #	Vend. Code	P.O. #	Del. Date	Date Rec'd	Unit Cost	Ext. Cost	Actual Cost
1	1		NIPPLE, 1 1/2" X CLOSE GALV								
2	1		ELL, 1 1/2" GALV								
3	1		NIPPLE, 1 1/2" X 5" LG GALV								
4	1		BALL VALVE, 1 1/2" BRASS								
5											
6											
7											
8											
9											
0											
1											
2											
3											
4											
5											
6											
7											

ITEM	QTY	DESCRIPTION	SIZE	MTRL.
1	3	PIPE	2" x 3 1/4" LG.	PVC
2	1	ELBOW (SOC x SOC) (836-020)	2"	PVC
3	3	FLOAT SWITCH GEMS-LS750	-	-
4	1	CLEAR TUBING	2" x 22" LG.	PVC
5	1	TEE (SOC x SOC x SOC) (801-020)	2"	PVC
6	2	MALE ADAPTER (838-020)	2"	PVC
7	1	UNION (SOC x FIPT) (869-020)	2"	PVC
8	1	JUNCTION BOX EXP., 3 FT.	(3) 3/8" NPT HOLES	CAST
9	1	CORD GRIP, SKIN TOP LAPP KASLE	3/8" NPT	-
				GALV.

UNLESS OTHERWISE SPECIFIED ALL PIPE & FITTINGS ARE TO BE SCH. 80 PVC

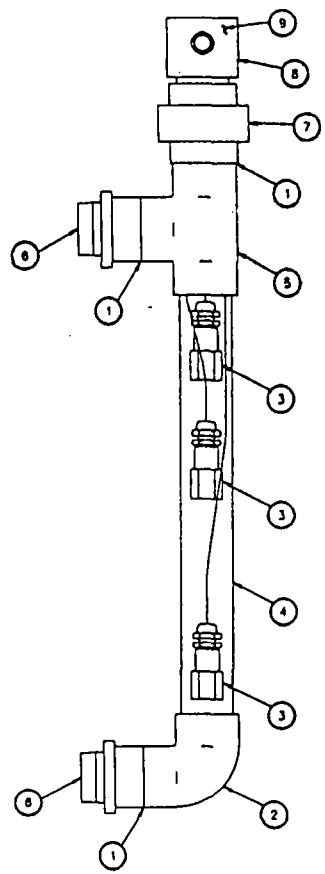

BOM# 5

ARTIC COMBUSTION

SIGHT GLASS/FLOAT, SOFT CORD, TRIPLE POINT ASSEMBLY

DRAWN 11/27/98

DO NOT SCALE THIS DRAWING

G2-B1000

B

ROJ. NAME:	LBG Dayton Ohio	PROJ. ORDER DATE:	BOM# 5
CC PROJ. N0:	99216	TARGET SHIP DATE:	
ROJ. MANAGER:	Karl Wittmann	BOM ISSUE DATE:	

vision No. 1 of 1 REF DWG G3-B1000 THREE POINT

m o.	Qty	CCC Part #	Description	MFG Part #	Vend. Code	P.O. #	Del. Date	Date Rec'd	Unit Cost	Ext. Cost	Actual Cost
1	3		PIPE, 2" SCHED 80 PVC, 3 1/4" LG								
2	1		ELL, 2" SPEARS 806-020								
3	3		GEMS LS750								
4	1		PIPE, 2"X 22" LG, SCHED 80 CLEAR								
5	1		TEE, 2" SPEARS 801-020								
6	2		ADAPTOR, 2", MALE, SPEARS 836-020								
7	1		UNION, 2", SOC X FIPT SPEARS 859-020								
8	1		JUNCTION BOX, 2" EPG, CAST, 3-3/8" NPT HOLES								
9	3		3/8" NPT CORD GRIP, SKIN TOP LAPP KABLE								
10											
11											
12											
13											
14											
15											
16											
17											

BOM# 5

Triple Level Float Switch

CCC's Triple Float VLS Switch is typically used with a condensate pump-out system. The high and low level floats are wired to relays to control a pump motor for automatic condensate discharge from the VLS sump. The high/high float is used for system shutdown and can be wired to an alarm notification system. Hermetically sealed reed switches mounted in a non-magnetic stem are actuated by permanent magnets contained in the float. A union is provided for removal of the float system. A slosh shield protects each individual float. The shield is easily removed from the float for quick, thorough cleaning. Wire jacketing is PVC. All pipe is Schedule 80 PVC. Switch actuation repeatability is ± ⅛ inch. The float switch assembly is housed in an Excelon clear PVC sight glass for viewing the liquid level in the VLS sump.

Switches can be configured from N.O. to N.C. and vice versa by simply inverting the float on the stem. Typically the low and high level floats are configured N.O. and the high/high float is configured N.C. Each switch can be wired as a dry contact or for 120V at 20VA. Intrinsically safe applications utilize solid state barrier relays. Electrical Connection is ½" NPT.

Material						
Stem and Mounting	**Float**	**Other Wetted**	**Min. Liquid Sp. Gr.**	**Operating Temperature**	**Switch**	**Maximum Pressure**
Brass	Buna-N	Nylon, PVC Beryllium Copper	.45	Water: 180°F Oil: -40 to 230°F	SPST 20 VA N.O.	150 psig

Approvals: U.L. Recognized, File No. E45168
CSA Listed, File No. 30200

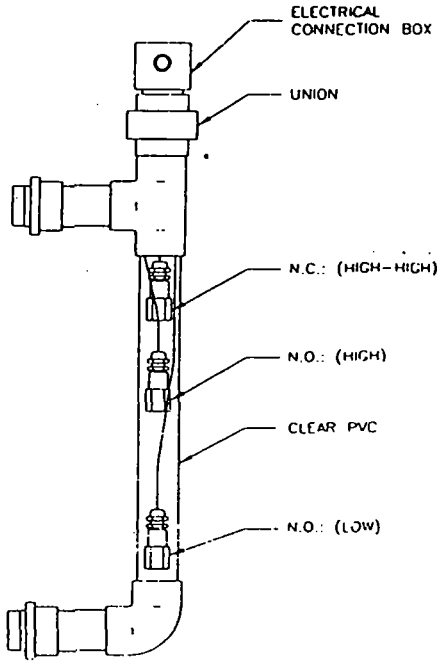

Volts	Amps AC	Amps DC	Leads
0-30	0.4	0.3	No. 22 AWG, 24" L, Polymeric Wires
120	0.17	0.13	
240	0.08	0.06	

Options: Teflon wire jacketing
All stainless steel float and shield construction

BOM# 5/3

Specialty Switches – Continued

Portable Level Switch — Integral Mounting Magnet

Precisely monitors liquid level and is ideal for controlling filling operations and preventing overflows. Permanent magnet attaches unit securely to steel tank wall at exact level required.

LS-750 Series — Weighted for Suspension Cable

With a compact-sized float, slosh shield and weighted collar, the LS-750 provides liquid level detection for a wide variety of applications. Suspend in stand pipes or sumps for leak detection duty, or drop into wells for ground-water monitoring. Supplied with 25 feet of waterproof cable.

U.L. Recognized— File No. E-45168 CSA Listed-File No LR-30200.

LS-700F Series

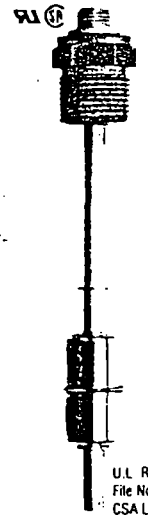

Overfill Protection for Refrigerant Tanks. The LS-700F enables safe compliance with EPA directives to recover refrigerants. These units are designed to fit standard 30# and 50# D.O.T. approve refrigerant tanks. They provide 80% full shutoff capability when used as an integral part of a recovery system.

U.L. Recognized— File No. SA8857. CSA Listed-File No LR-30200-31

LEVEL SWITCHES

Dimensions

Portable Level Switch	LS-750	LS-700F
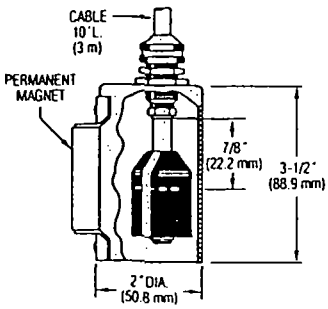	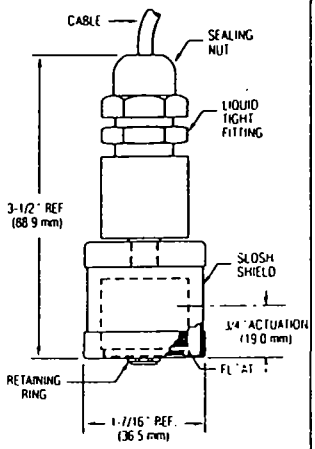	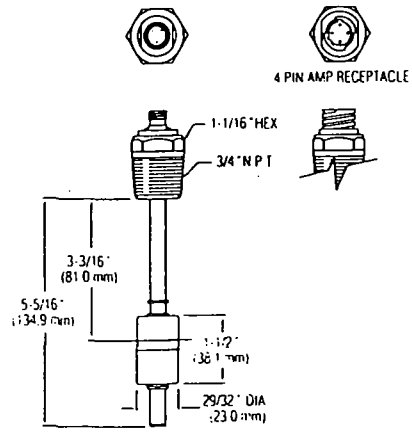
SJO, 18/2 10'L., Neoprene	22 AWG, 2-Wire Cable – Jacket Material Optional	3- or 4-Pin, Quick-Connect Receptacle

†L_1 = Switch actuation level. In liquid with specific gravity of 1.0, switch actuation is approximately half the distance from end of stem to mounting, or at the halfway point of float travel

How To Order — Select Part Number based on specifications required.

Series	Material: Stem and Mounting	Material: Float	Material: Other Wetted	Min. Liquid Sp. Gr.	Operating Temperature	Pressure, PSI, Max.	Switch* SPST, 20VA	Electrical Termination Option	Part Number
Portable	Brass	Buna N	Aluminum, 316 Stainless Steel	75	Oil: -40°F to +230°F (-40°C to +110°C) Water: to 180°F (82.2°C)	10	N.O. Dry	—	15208 ⚡
LS-750	Brass	Buna N	Nylon, PVC, Beryllium Copper	45		150	N.C. Dry	PVC Cable Jacket	149350 ⚡
								Teflon® Cable Jacket	120850
LS-700F	Brass	304 Stainless Steel	—	98	-40°F to +221°F (-40°C to +105°C)	400	N.C. Dry	3-Pin	128500
								4-Pin	144900

*See "Electrical Data" on Page A-4 for more information.

⚡ - Stock Items

PROJ. NAME:	LBG, Dayton - VLS Retrofit	**PROJ. ORDER DATE:**	5/24/00
CCC PROJ. N0:	99-216	**TARGET SHIP DATE:**	
PROJ. MANAGER:	Karl Wittmann	**BOM ISSUE DATE:**	5/26/99

Revision No. 1 of 1

Item No.	Qty	CCC Part #	Description	MFG Part #	Vend. Code	P.O. #	Del. Date	Date Rec'd	Unit Cost	Ext. Cost	Actual Cost
601	1		Square D, Contactor, IEC, 3PH, 120V coil 1 N.O.	LC1D0910G6							
602	1		Square D, Thermal Overload, Class 20	LR2D1512							
603	1		Bussmann, Fuse Holder, Touchsafe, Class CC	CHCC3							
604	3		BUSSMANN, Fuse, 600V, 5 Amp, Class CC	LP-CC-5							
605	1		Warrick Level Control, Series 16M,120VAC, 2CH, 100K ohms, Direct Mode, No Encl. DIN	16MC1B0-05-00							
606	1		IDEC Relay, 4PDT, 120V, w/ indicator light	RH4B-UL-AC120V							
607	1		IDEC Relay Socket, 4PDT	SH4B-06							
608	1		Square D Telemech Selector Switch, 3 position, green light, spring LT to RT	ZB2-BK173							
609	1		Square D Telemech Transformer light module with 2NO contacts	ZB2-BW033							
610	1		Square D, Pilot Light Lens, RED	ZB2-BV04							
611	1		Square D, Pilot Light Module, 120V Transformer, Type, 6V Bulb	ZB2-BV3							
612											
613											
614											
615											
616											
617											

EPA Region 5 Records Ctr.
350084

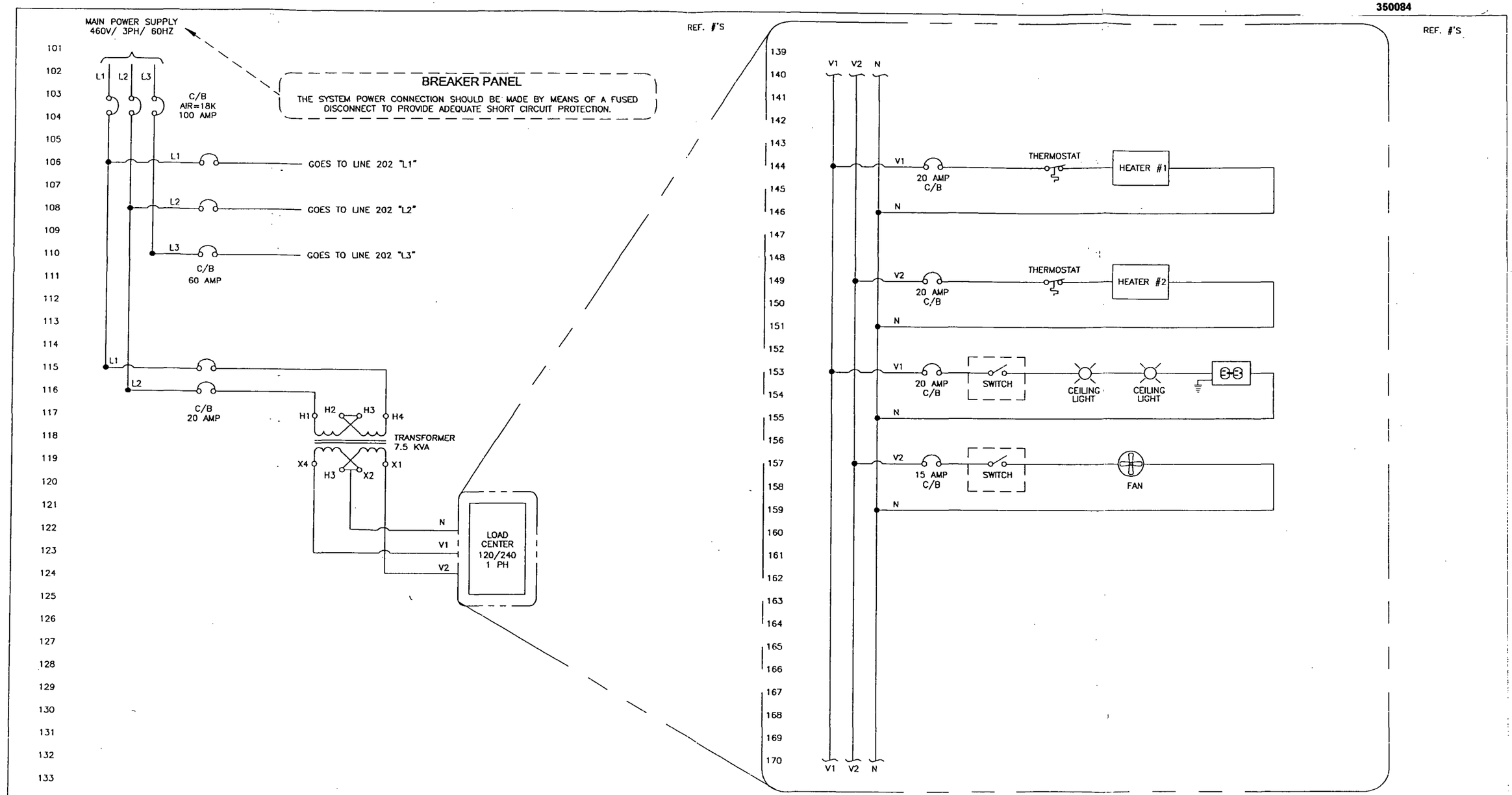

SHEET (1) OF (5)

REV	DATE	DESCRIPTION

ANALYTIC COMBUSTION CORPORATION
700 - 21st Avenue Bloomer, Wisconsin 54724
Telephone 715-568-7003 FAX 715-568-3006

THIS INFORMATION HEREON IS THE PROPERTY OF ANALYTIC COMBUSTION CORP. WITHOUT WRITTEN PERMISSION, NOT COPYING, TRANSMITTING TO OTHERS, USE AND USE EXCEPT THAT FOR WHICH IT IS LOANED, IS PROHIBITED.

CUSTOMER: LBG

TITLE: ELECTRICAL SCHEMATICS EXISTING SVE

SCALE: FULL	DATE: 05/26/99	DRAWN BY: M.R.	CHK'D BY: B.G.	PROJECT NO.: 99-216	REV: 0
INCH DIM.→X.XX [XX.X]←mm DIM.		DO NOT SCALE THIS DRAWING		DWG. NO. 99216301	B

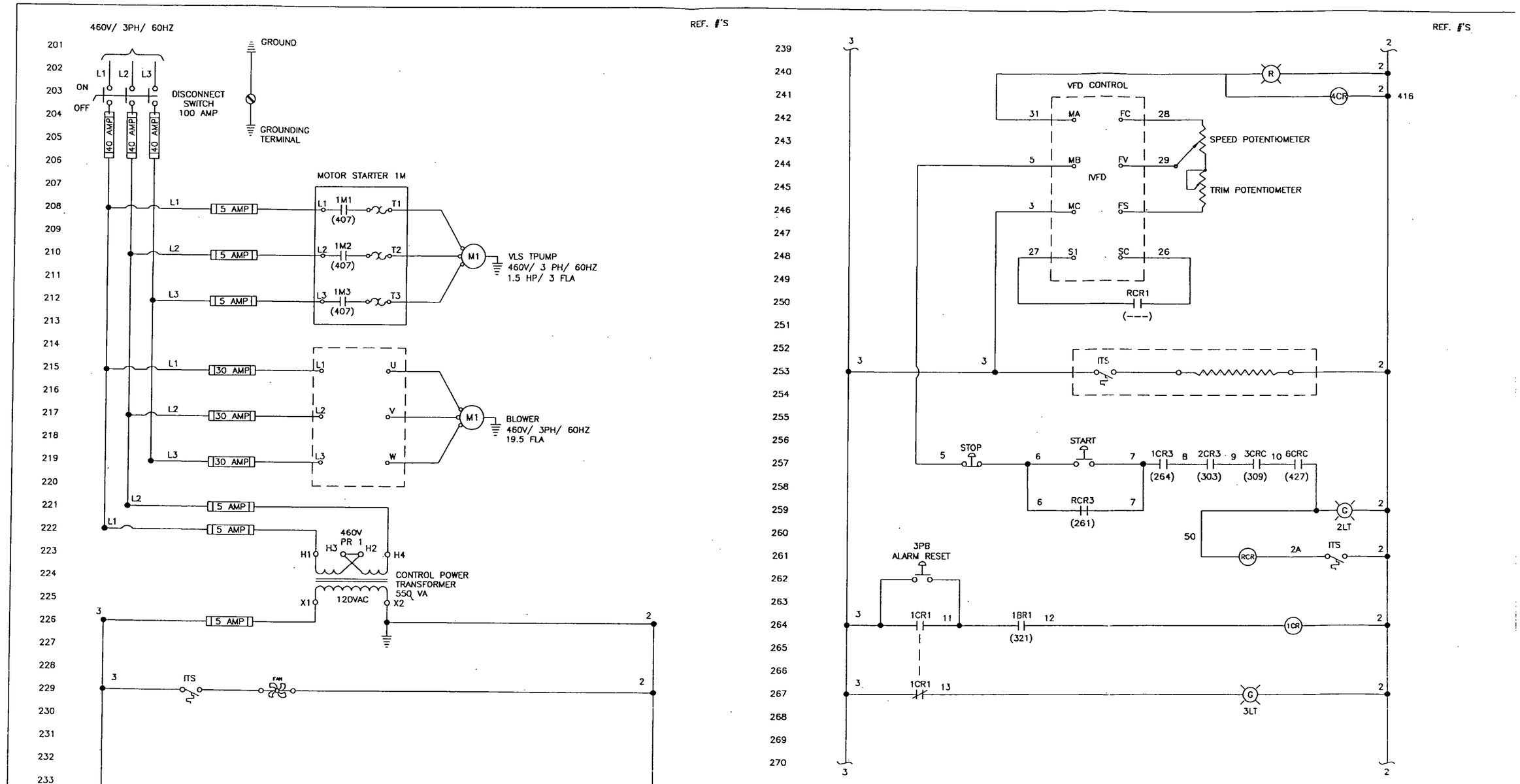

SHEET (2) OF (5)

REV	DATE	DESCRIPTION

CATALYTIC COMBUSTION CORPORATION

CUSTOMER: LBG

TITLE: ELECTRICAL SCHEMATIC EXISTING SVE

SCALE: FULL | DATE: 05/26/99 | DRAWN BY: H.R. | CHK'D BY: B.G. | PROJECT NO.: 99-216 | REV: 0

INCH DIM.→X.XX [XX.X]←mm DIM. | DO NOT SCALE THIS DRAWING | DWG. NO. 99216302 | B

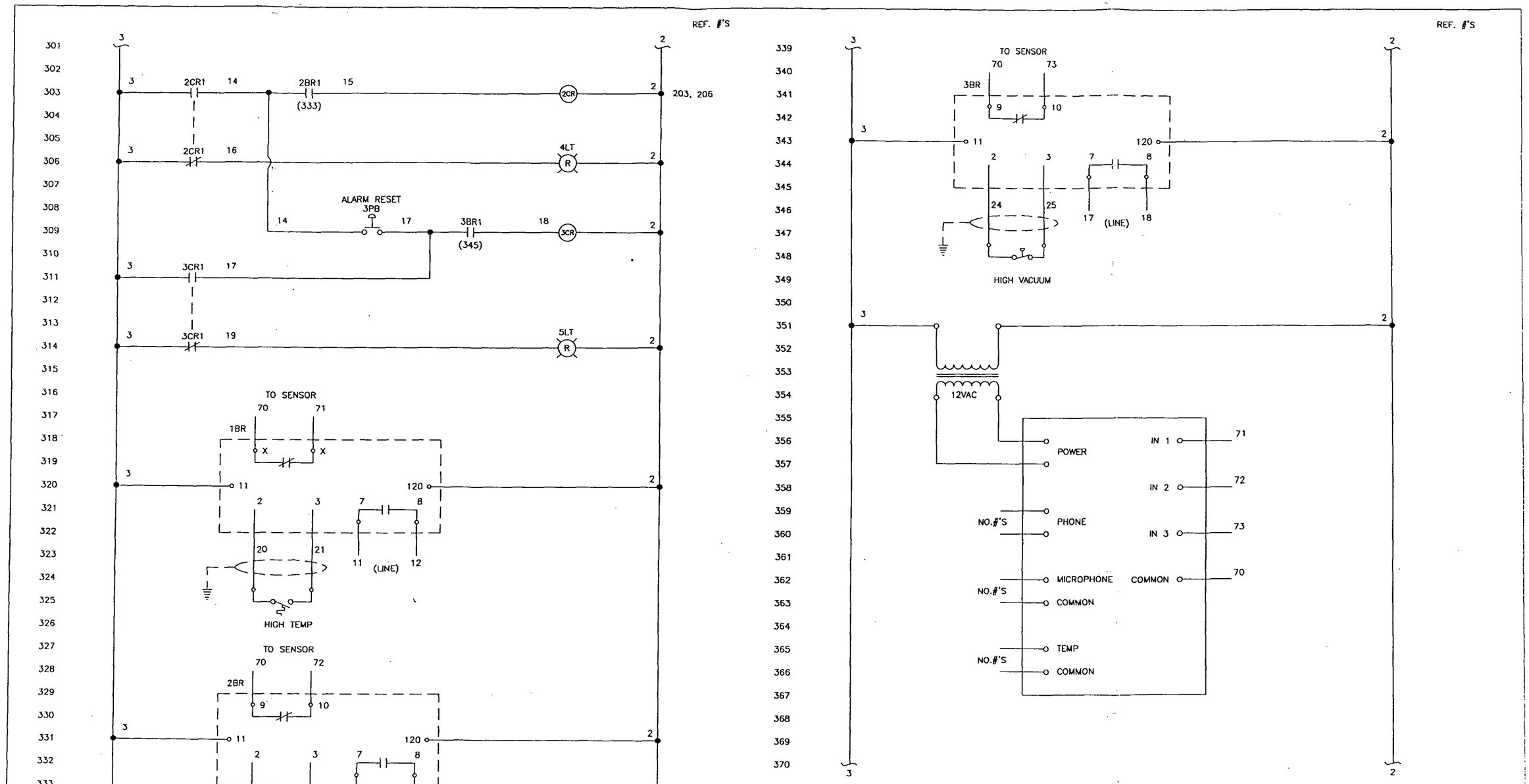

SHEET (3) OF (5)

CATALYTIC COMBUSTION

REV	DATE	DESCRIPTION

CUSTOMER: LBG

TITLE: ELECTRICAL SCHEMATIC EXISTING SVE

SCALE: FULL | DATE: 05/26/99 | DRAWN BY: M.V.R. | CHK'D BY: B.G. | PROJECT NO.: 99-216 | REV: 0

INCH DIM.→X.XX [XX.X]←mm DIM. | DO NOT SCALE THIS DRAWING | DWG. NO. 99216303 | B

REF. #'S

REF. #'S

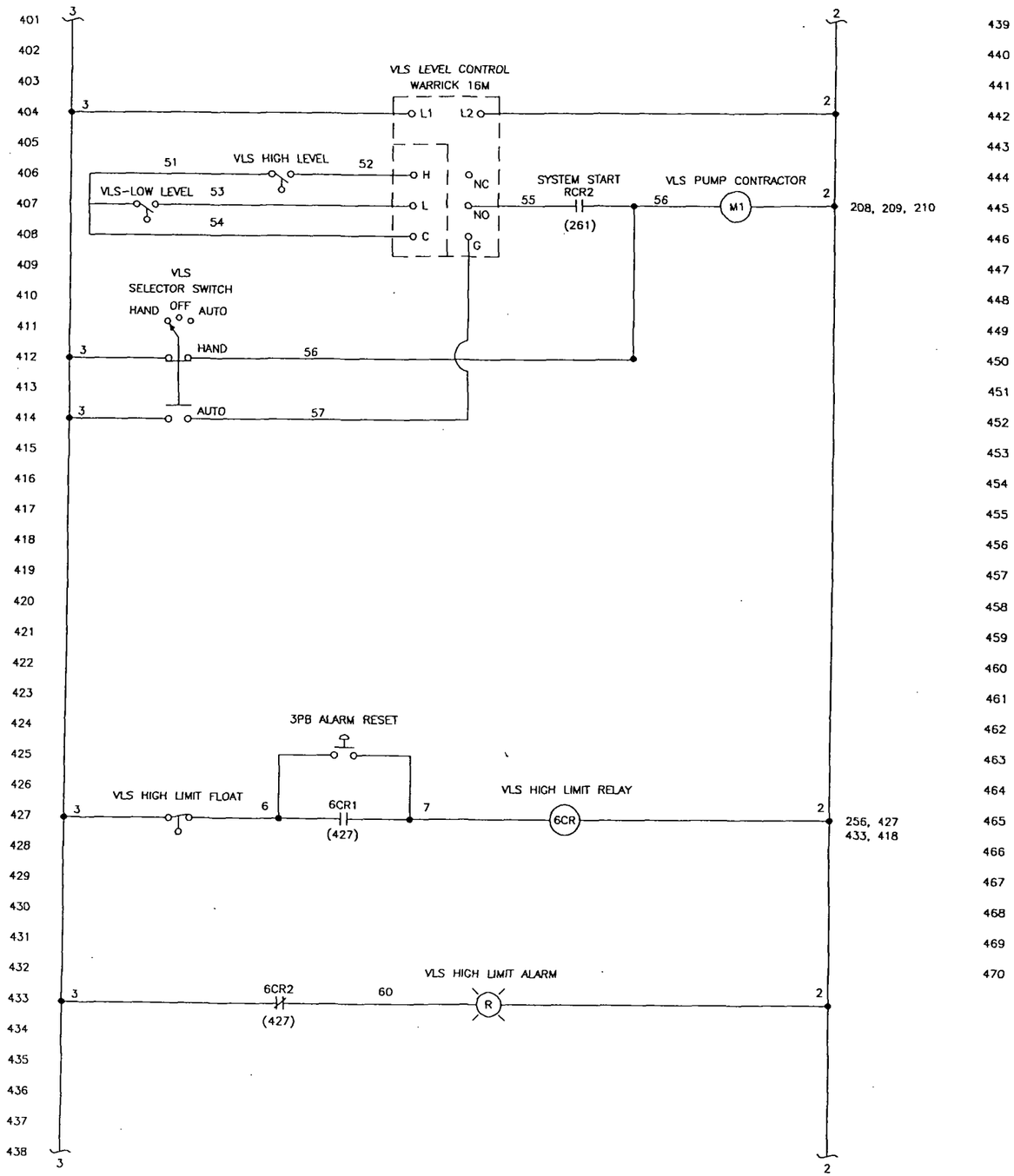

SHEET (5) OF (5)

REV	DATE	DESCRIPTION

CATALYTIC COMBUSTION CORPORATION

CUSTOMER: LBG

TITLE: ELECTRICAL SCHEMATIC EXISTING SVE

SCALE: FULL | DATE: 05/26/99 | DRAWN BY: H.R. | CH'KD BY: B.G. | PROJECT NO.: 99-216 | REV: 0

INCH DIM.→X.XX [XX.X]←mm DIM. | DO NOT SCALE THIS DRAWING | DWG. NO. 99216305 | B

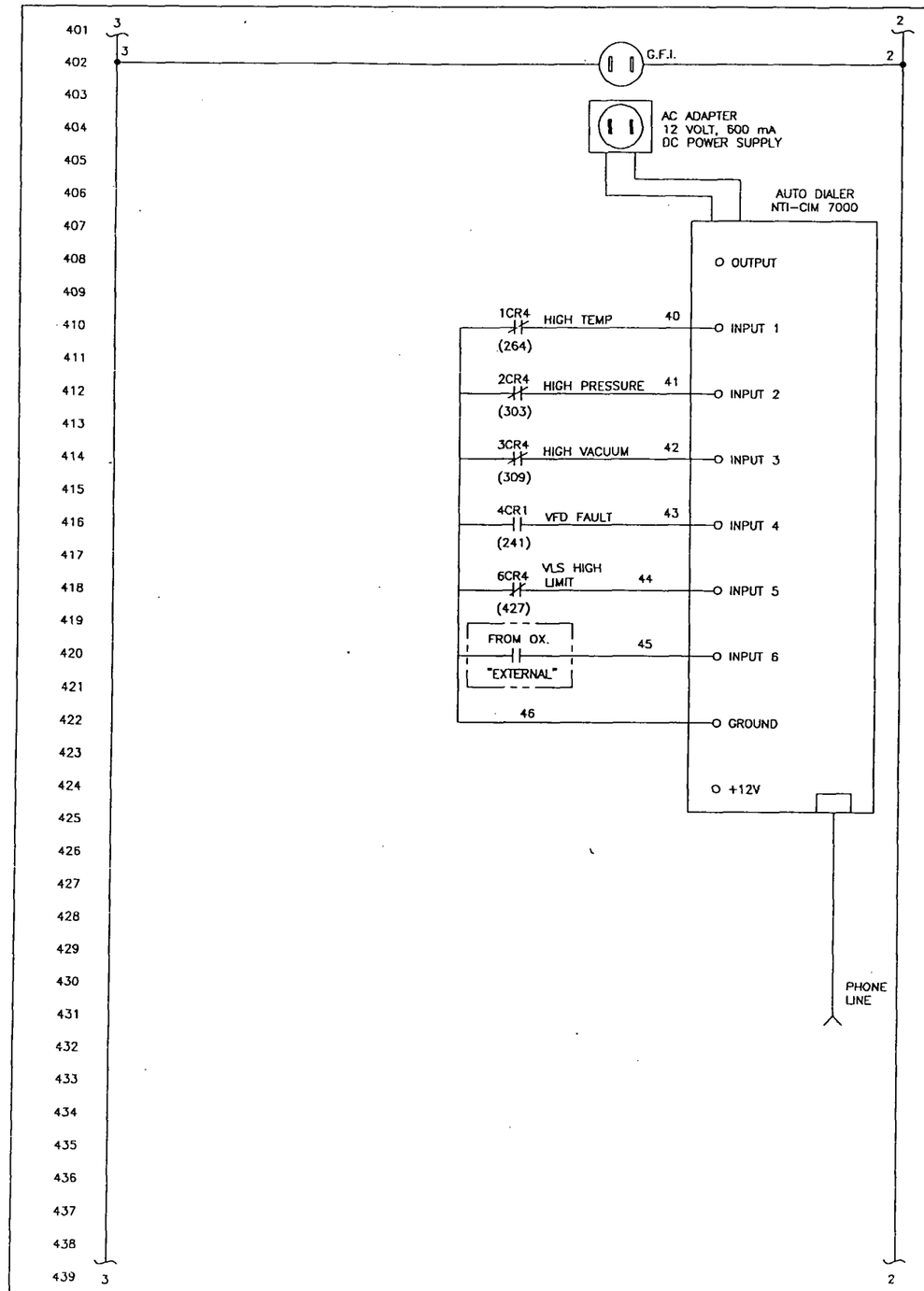

REV	DATE	DESCRIPTION
2	05/26/99	UPDATED DWG.
1	2/24/99	ADDITION TO JOB 98-148 (8/7/98)

CATALYTIC COMBUSTION CORPORATION
708 - 21st Avenue Bloomer, Wisconsin 54724
Telephone 715-568-2862 FAX 715-568-3884

THIS INFORMATION HEREON IS THE PROPERTY OF CATALYTIC COMBUSTION CORP. WITHOUT WRITTEN PERMISSION, ANY COPYING, DUPLICATION, TO BORROW, AND ANY USE EXCEPT THAT FOR WHICH IT IS LOANED, IS PROHIBITED.

CUSTOMER: LBG

TITLE: ELECTRICAL SCHEMATIC

SCALE: NONE	DATE: 2/24/99	DRAWN BY: M.R.	CHK'D BY: B.G.	PROJECT NO.: 99052	REV: 2
INCH DIM.→X.XX [XX.X]←mm DIM.		DO NOT SCALE THIS DRAWING	DWG. NO. 99052301		D

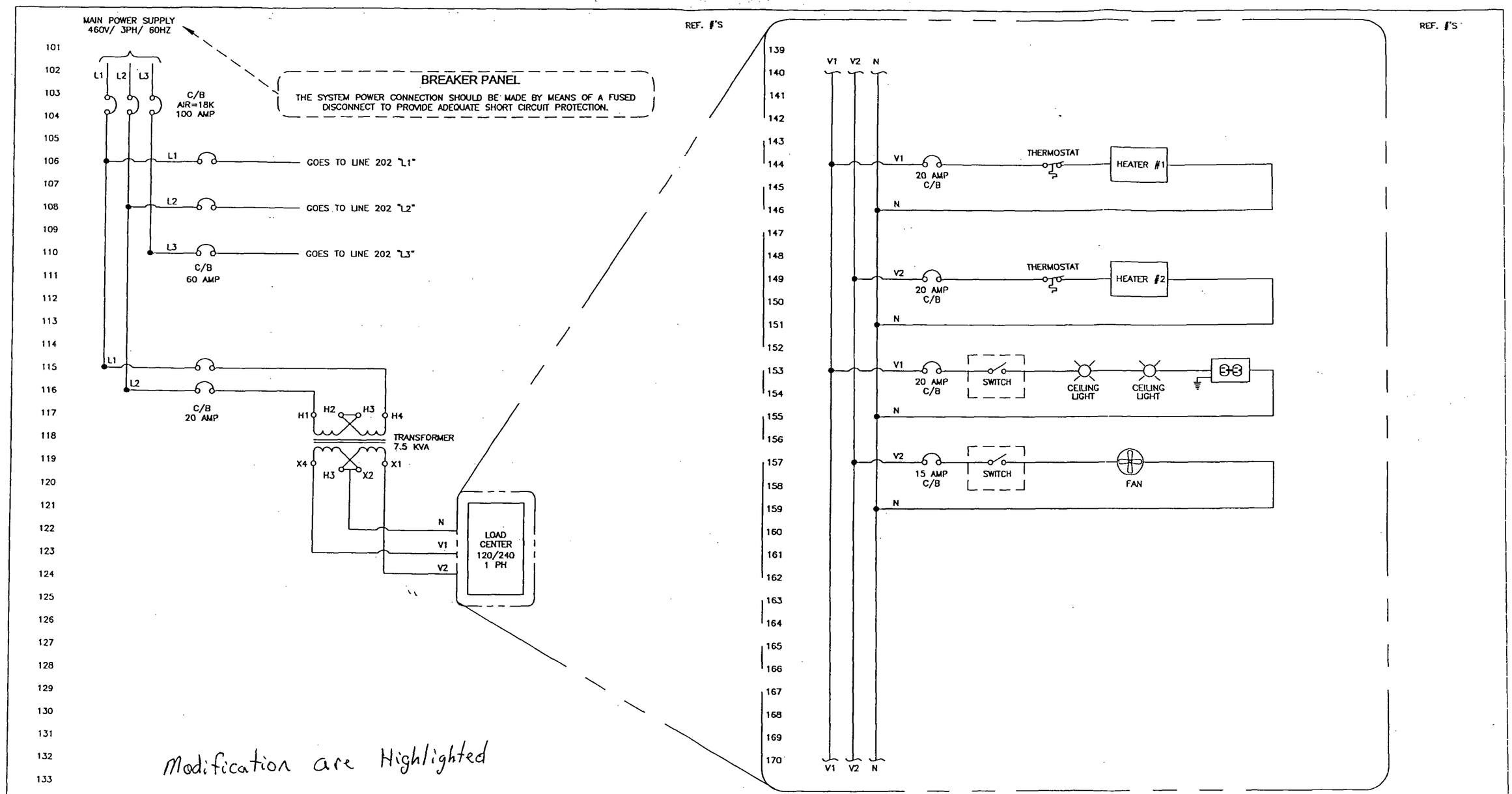

Modification are Highlighted

SHEET (1) OF (5)

REV	DATE	DESCRIPTION

CATALYTIC COMBUSTION

CUSTOMER: LBG

TITLE: ELECTRICAL SCHEMATICS EXISTING SVE

SCALE: FULL	DATE: 05/26/99	DRAWN BY: M.R.	CHK'D BY: B.G.	PROJECT NO.: 99-216	REV: 0
INCH DIM.→X.XX [XX.X]←mm DIM.		DO NOT SCALE THIS DRAWING	DWG. NO. 99216301		B

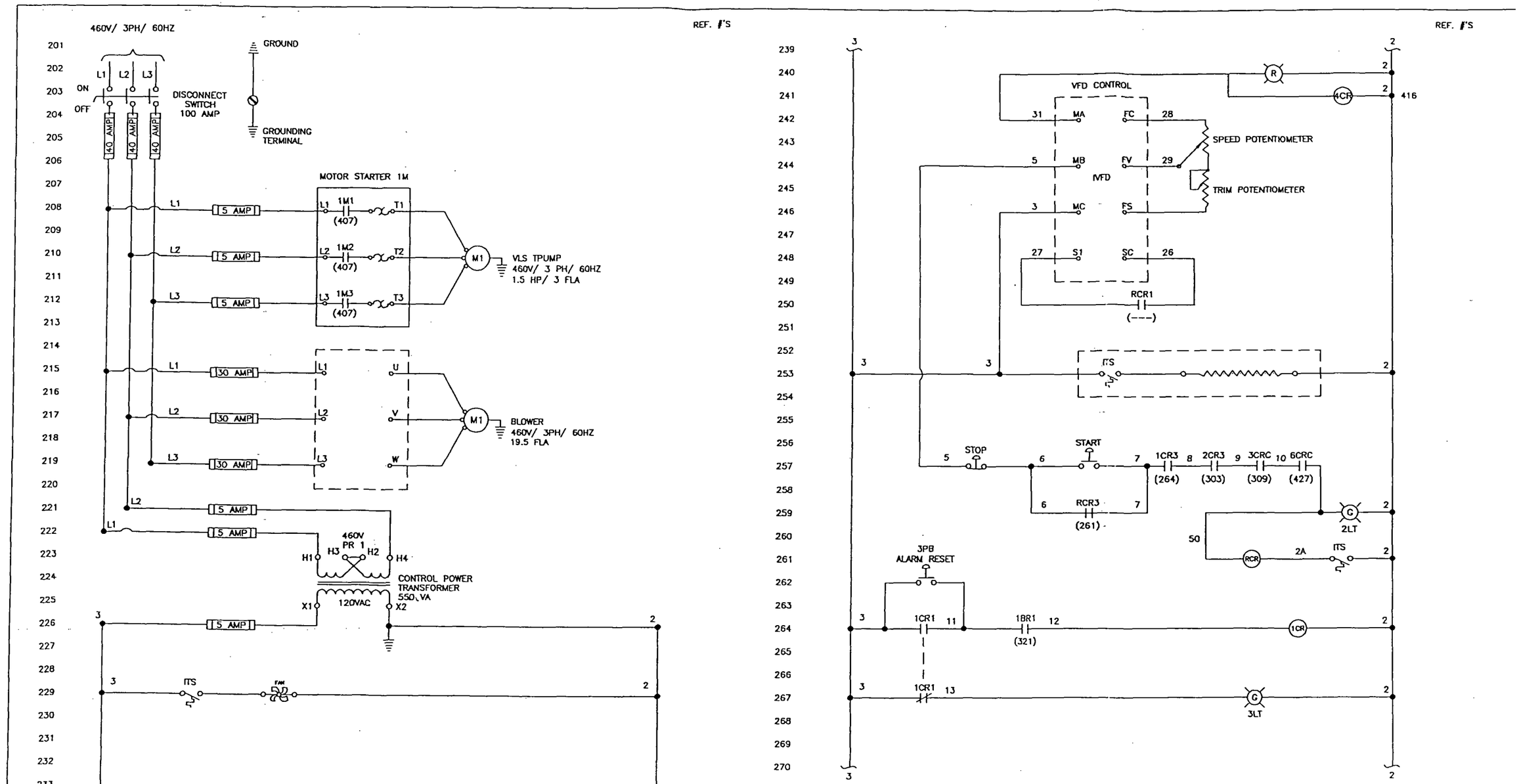

SHEET (2) OF (5)

CATALYTIC COMBUSTION

REV	DATE	DESCRIPTION

CUSTOMER: LBG

TITLE: ELECTRICAL SCHEMATIC EXISTING SVE

SCALE: FULL	DATE: 05/26/99	DRAWN BY: M.R.	CHK'D BY: B.G.	PROJECT NO.: 99-216	REV: 0
INCH DIM.→X.XX [XX.X]←mm DIM.		DO NOT SCALE THIS DRAWING	DWG. NO. 99216302		B

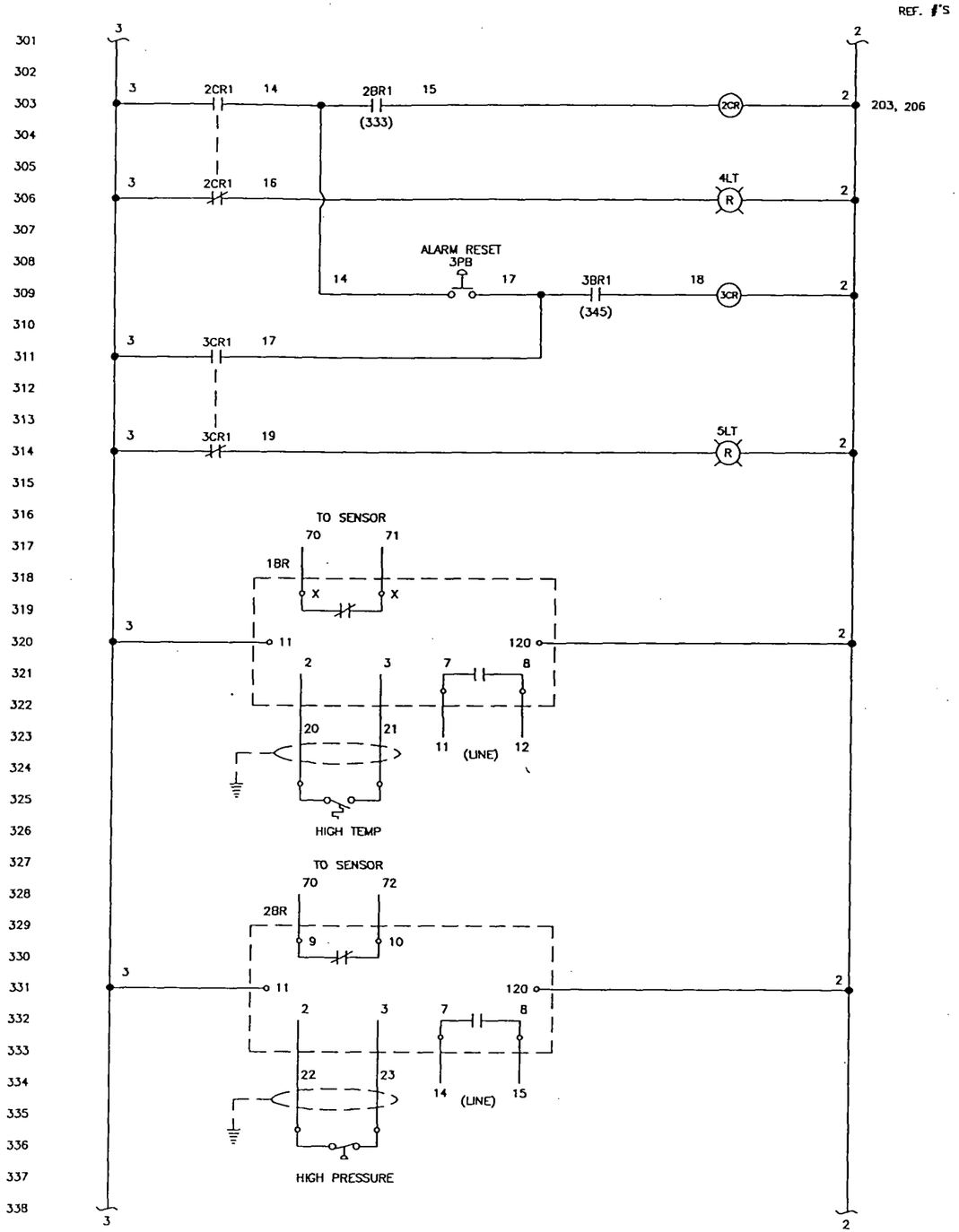

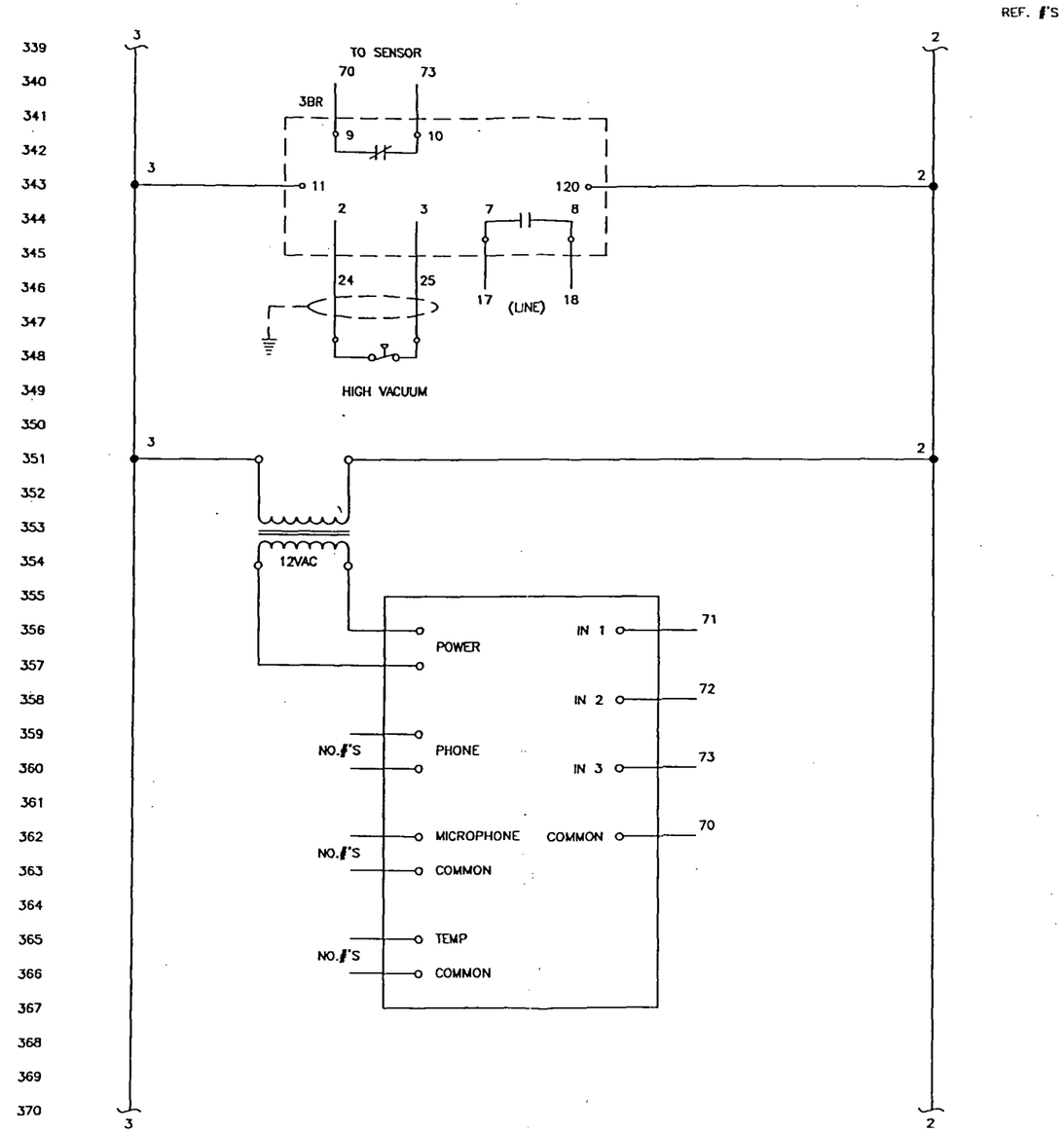

SHEET (3) OF (5)

CATALYTIC COMBUSTION CORPORATION

REV	DATE	DESCRIPTION

CUSTOMER: LBG

TITLE: ELECTRICAL SCHEMATIC EXISTING SVE

SCALE: FULL	DATE: 05/26/99	DRAWN BY: M.V.R.	CHK'D BY: B.G.	PROJECT NO.: 99-216	REV: 0
INCH DIM.→X.XX [XX.X]←mm DIM.		DO NOT SCALE THIS DRAWING		DWG. NO. 99216303	B

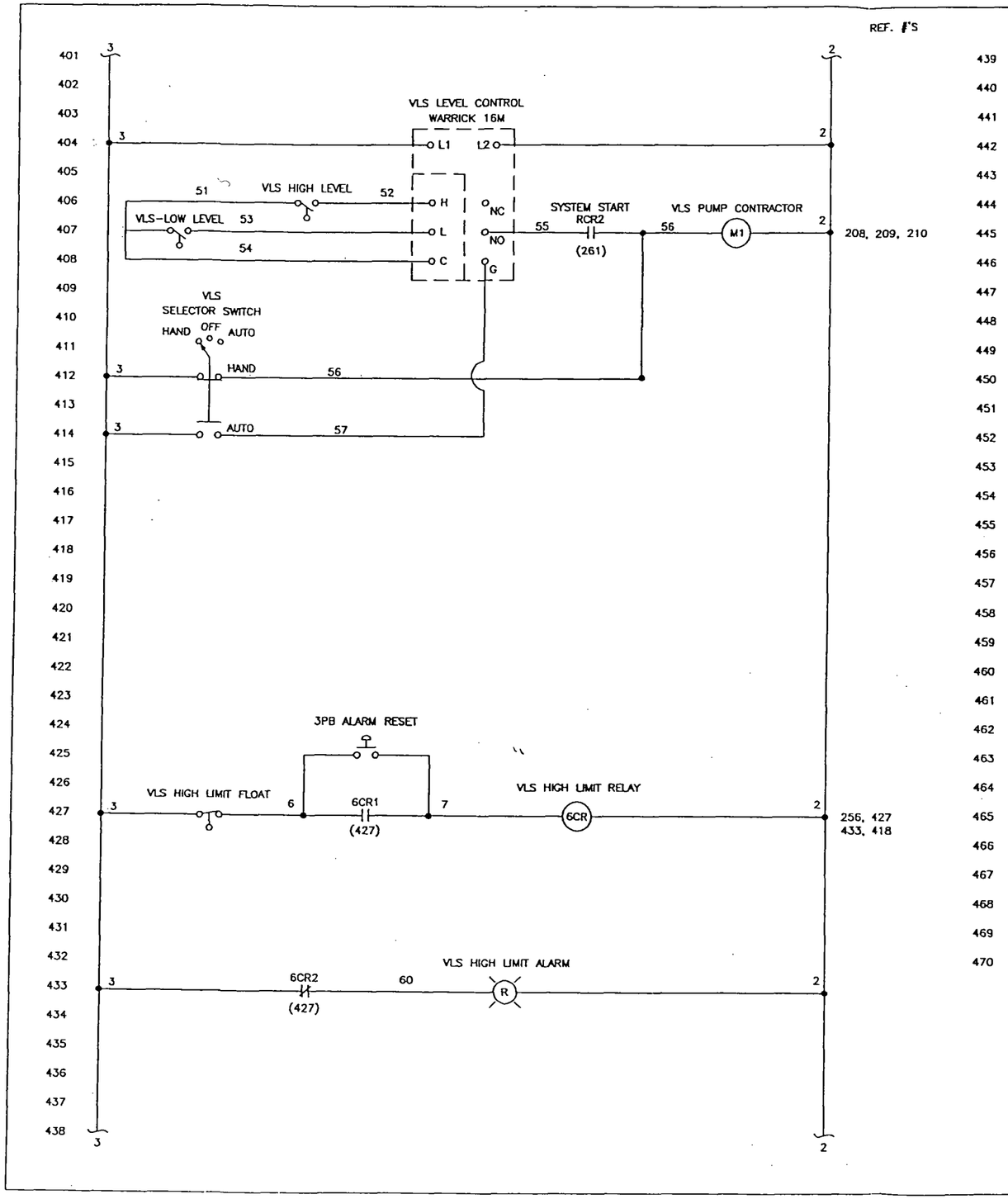

SHEET (5) OF (5)

REV	DATE	DESCRIPTION

CATALYTIC COMBUSTION

CUSTOMER: LBG

TITLE: ELECTRICAL SCHEMATIC EXISTING SVE

SCALE: FULL	DATE: 05/26/99	DRAWN BY: M.R.	CHK'D BY: B.G.	PROJECT NO.: 99-216	REV: 0
INCH DIM.-->X.XX [XX.X]<--mm DIM.		DO NOT SCALE THIS DRAWING	DWG. NO. 99216305		

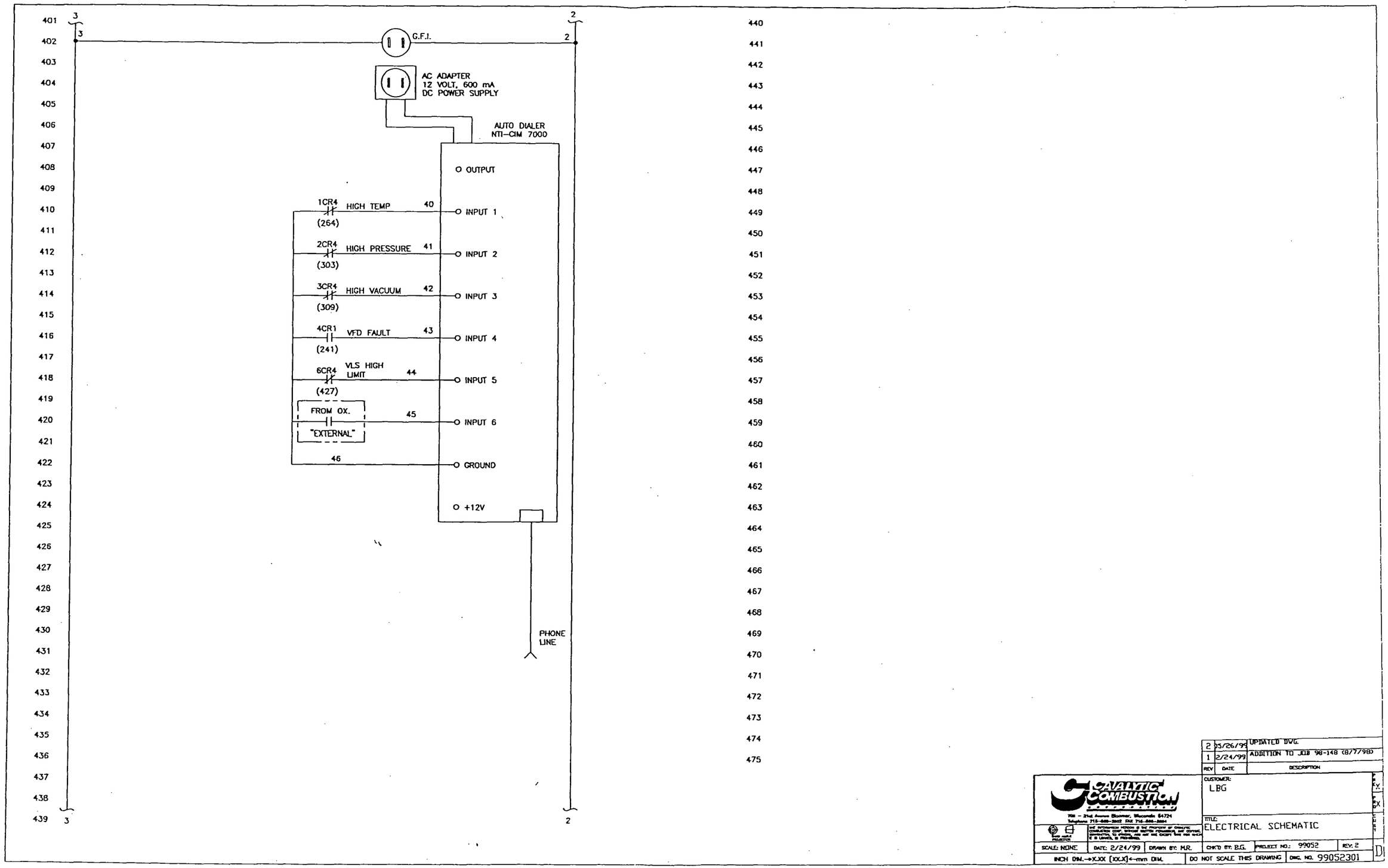
G.F.I.
AC ADAPTER
12 VOLT, 600 mA
DC POWER SUPPLY
AUTO DIALER
NTI-CIM 7000
OUTPUT
1CR4 HIGH TEMP 40 INPUT 1
(264)
2CR4 HIGH PRESSURE 41 INPUT 2
(303)
3CR4 HIGH VACUUM 42 INPUT 3
(309)
4CR1 VFD FAULT 43 INPUT 4
(241)
6CR4 VLS HIGH LIMIT 44 INPUT 5
(427)
FROM OX. 45 INPUT 6
"EXTERNAL"
46 GROUND
+12V
PHONE LINE
REV DATE DESCRIPTION
2 05/26/99 UPDATED DWG.
1 2/24/99 ADDITION TO JOB 98-148 (8/7/98)
CUSTOMER: LBG
TITLE: ELECTRICAL SCHEMATIC
SCALE: NONE
DATE: 2/24/99
DRAWN BY: M.R.
CHK'D BY: B.G.
PROJECT NO.: 99052
REV: 2
INCH DIM.→X.XX [XX.X]←mm DIM.
DO NOT SCALE THIS DRAWING
DWG. NO. 99052301

How To Order

Merely determine the pipe size into which the flow sensor will be mounted and designate the size as a suffix to Model DS-300. For example, a flow sensor to be mounted in a 2" pipe would be a Model No. DS-300-2".

Optional and Accessories

Less Valves (DS-300) — To order, add suffix -LV. Example: DS-300-2"-LV
A-160 Thredolet — ⅜" NPT, forged steel, 3000 psi
A-161 Bushing — ¼" x ⅜" brass bushing

For non-critical water and air flow monitoring applications, the chart below can be utilized for ordering a stock Capsuhelic® differential pressure gage for use with the DS-300 flow sensor. Simply locate the maximum flow rate for the media being measured under the appropriate pipe size and read the Capsuhelic® gage range in inches of water column to the left. The DS-300 sensor is supplied with installation and operating instructions, Bulletin F-50. It also includes complete flow conversion information for the three media conditions shown in the chart below. This information enables the user to create a complete differential pressure to flow rate conversion table for the sensor and differential pressure gage employed. Both the Dwyer Capsuhelic® gage and flow sensor feature excellent repeatability so, once the desired flow rate is determined, deviation from that flow in quantitative measure can be easily determined. You may wish to order the adjustable signal flag option for the Capsuhelic® gage to provide an easily identified reference point for the proper flow.

Capsuhelic® gages with special ranges and/or direct reading scales in appropriate flow units are available on special order for more critical applications. Customer supplied data for the full scale flow (quantity and units) is required along with the differential pressure reading at that full flow figure. Prior to ordering a special Capsuhelic® differential pressure gage for flow read-out, we recommend you request Bulletin F-50 to obtain complete data on converting flow rates of various media to the sensor differential pressure output. With this bulletin and after making a few simple calculations, the exact range gage required can easily be determined.

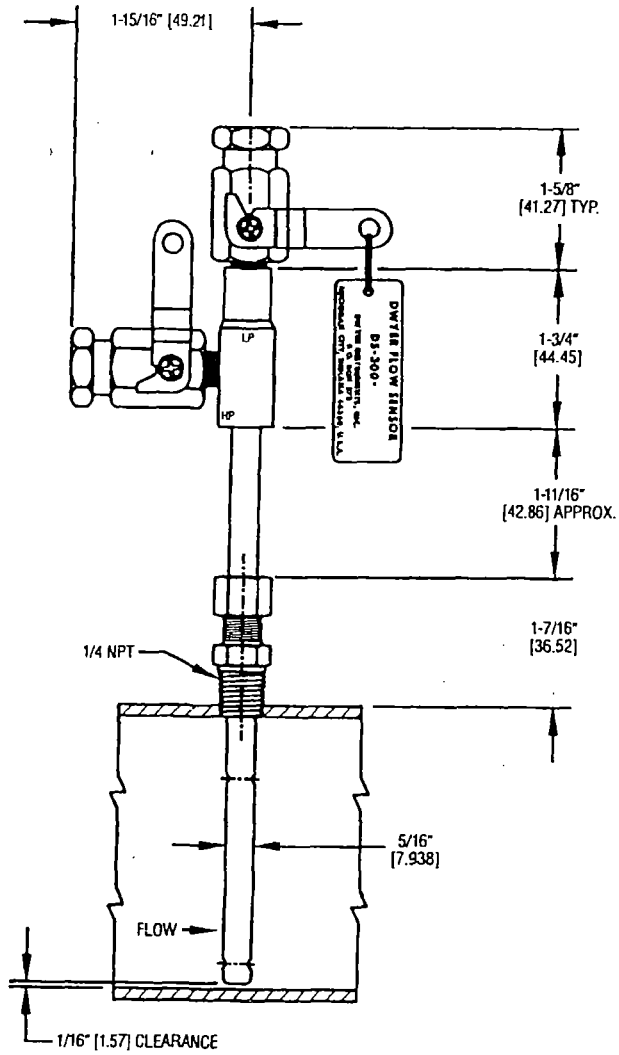

GAGE RANGE (IN. W.C.)	MEDIA @ 70°F	FULL RANGE FLOWS BY PIPE SIZE (APPROXIMATE)									
		1"	1¼"	1½"	2"	2½"	3"	4"	6"	8"	10"
2	Water (GPM)	4.8	8.3	11.5	20.5	30	49	86	205	350	560
	Air @ 14.7 PSIA (SCFM)	19.0	33.0	42.0	65.0	113	183	330	760	1340	2130
	Air @ 100 PSIG (SCFM)	50.0	90.5	120.0	210.0	325	510	920	2050	3600	6000
5	Water (GPM)	7.7	14.0	18.0	34.0	47	78	138	320	560	890
	Air @ 14.7 PSIA (SCFM)	30.0	51.0	66.0	118.0	178	289	510	1200	2150	3400
	Air @ 100 PSIG (SCFM)	83.0	142.0	190.0	340.0	610	820	1600	3300	5700	10000
10	Water (GPM)	11.0	19.0	25.5	45.5	67	110	195	450	800	1260
	Air @ 14.7 PSIA (SCFM)	41.0	72.0	93.0	163.0	250	410	725	1690	3040	4860
	Air @ 100 PSIG (SCFM)	120.0	205.0	275.0	470.0	740	1100	2000	4600	8100	15000
25	Water (GPM)	18.0	32.0	40.5	72.0	108	173	310	720	1250	2000
	Air @ 14.7 PSIA (SCFM)	63.0	112.0	155.0	255.0	390	640	1130	2630	4860	7700
	Air @ 100 PSIG (SCFM)	185.0	325.0	430.0	760.0	1200	1800	3300	7200	13000	22000
50	Water (GPM)	25.0	44.0	57.5	100.0	152	247	435	1000	1800	
	Air @ 14.7 PSIA (SCFM)	90.0	161.0	205.0	360.0	560	900	1600	3700	6400	
	Air @ 100 PSIG (SCFM)	260.0	460.0	620.0	1050.0	1700	2600	4600	10000	18500	
100	Water (GPM)	36.5	62.0	82.0	142.0	220	350	620	1500		
	Air @ 14.7 PSIA (SCFM)	135.0	230.0	300.0	505.0	800	1290	2290	5000		
	Air @ 100 PSIG (SCFM)	370.0	660.0	870.0	1500.0	2300	3600	6500	15000		

CATALYTIC COMBUSTION CORPORATION
Product Information & Warranty

Project Name: **Dayton Thermal Products Plant**

Consultant: **LBG Inc.**

CCC Job No. 98-148

READ THIS MANUAL
For important safety, installation, operation and maintenance instructions.
Keep this manual with the unit at all times.

Issued: August 1998

Catalytic Combustion Corporation
709 21st Avenue
Bloomer, WI 54724

Phone: (715) 568-2882
Fax: (715) 568-2884

Warranty Guidelines

Customer must obtain a Return Goods Authorization Number prior to returning any parts or systems.

Items must be returned freight prepaid to CCC. We should not receive any returns freight collect unless we have given written pre-approval. Return freight will be the responsibility of the customer.

Customer must understand that we will evaluate the product in question to determine if it is a warranty consideration.

Return freight to the customer or jobsite will be sent F.O.B our facility.

Equipment not manufactured by CCC is subject to the manufacturer's warranty. Their specific warranty policy must be followed.

Vapor Extraction System Check List

Test/Start-up/Service

Date: _____ ☐ Test (in-house)

Project No. _____ ☐ Start-up (site)

Project Name: _____ ☐ Service Call

Performed By: _____

Accepted By: _____

Blower

____ Type (PD) (Regen)
____ Rotation Check
____ Inlet Vacuum
____ Outlet Pressure
____ Outlet Temp
____ Oil Level
____ Belt Condition

Motor

____ Hp
____ Voltage
____ Phase
____ N.P. Amp
____ Amp Draw (3)
____ RPM

Separator

____ Inlet Vacuum
____ Outlet Vacuum
____ Pressure Differential
____ Condensate Level

Condensate Pump

____ Type
____ Hp
____ Voltage
____ Phase
____ N.P. Amp
____ Amp Draw (3)
____ RPM
____ GPM
____ Discharge Pressure
____ Vacuum Pumped Against

General

____ Δp Filter
____ Filter Condition
____ Air Flow (CFM)
____ Well Vacuum
____ Hours Operation
____ Set Pt. Vacuum Relief
____ Break Pt. Vacuum Relief
____ Inlet Pressure, Carbon
____ Reference Voltage (site)
____ Decibel at 10 ft.

Switch Setting

Temperature:
____ Type
____ Setting

Vacuum:
____ Type
____ Setting

Pressure:
____ Type
____ Setting

Liquid Level:
____ Single
____ Triple

Comments: _____

_____

_____

_____

Single Level Float Switch

CCC's Single Float VLS Switch is typically used for high level shutdown in the absence of an automatic pump out system. A hermetically sealed reed switch mounted in a non-magnetic stem is actuated by permanent magnets contained in the float. The magnetically actuated make-and-break reed switch is accurate to within ± ⅛ inch. The brass stem and Buna N float offer broad chemical compatibility. The float switch assembly is housed in an Excelon clean PVC sight glass for viewing the liquid level in the VLS sump.

Standard switch configuration is N.C. but can be changed to N.O. by inverting the float on the stem. The SPST float switch can be wired as a dry contact or for 120 V at 20 VA. Intrinsically-safe applications utilize solid-state barrier relays.

Material						
Stem and Mounting	**Float**	**Other Wetted**	**Min. Liquid Sp. Gr.**	**Operating Temperature**	**Switch**	**Maximum Pressure**
Brass	Buna N	Epoxy, 316 SS	0.65	Water: 180°F Oil: -40 to 230°F	SPST 20 VA N.O.	125 psig

Approvals: U.L. Recognized, File No. E45168
CSA Listed, File No. 30200

Volts	Amps AC	Amps DC	Leads
0-30	0.4	0.3	No. 22 AWG, 24" L, Polymeric Wires
120	0.17	0.13	
240	0.08	0.06	

Buna N Float

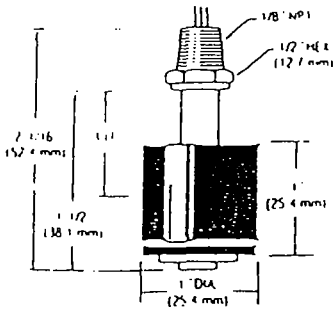

Typical Wiring Diagrams

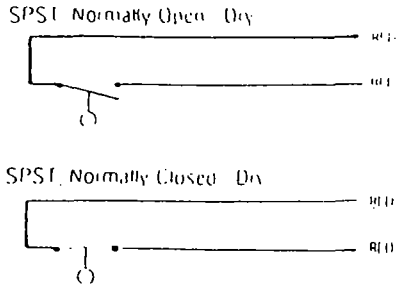

ok

Spencer® VB-110 Vortex Blower

Bulletin 419E

General Specifications:

Model	VB-110
Maximum volume	655 CFM
Maximum operating vacuum/pressure	100"/108" H_2O
Maximum ambient	40°C
Weight	370 lbs.
Acoustical noise @ 1.5 meters	81 dB(A) at 60 Hz

Motor specifications:	TEFC
Standard voltage	200-230/460, 3 phase, 60 Hz
Power input	15 HP
FLA current	41-39/19.5 amps
Locked rotor current	63.9-73.5/147 amps
Insulation	NEMA Class F
Speed	3500 RPM @ 60 Hz

Note: Motor can be operated at 50 Hz. For performance and voltage variation contact factory representative. Motors are U.L. and C.S.A. recognized.

All dimensions are in inches and are subject to change.

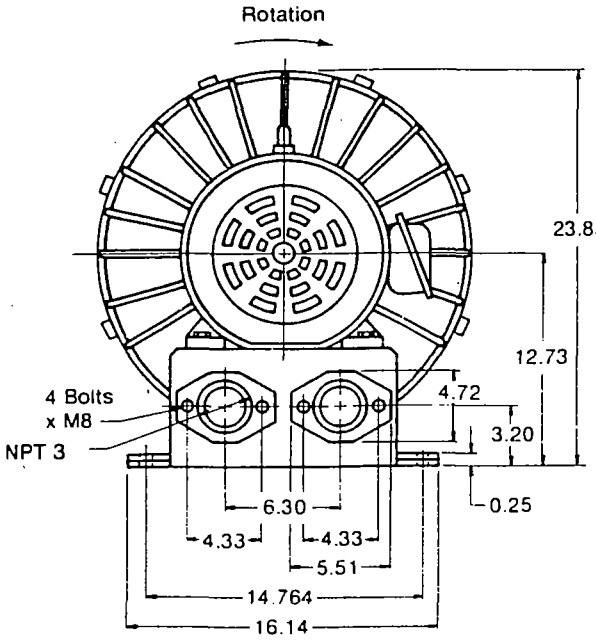

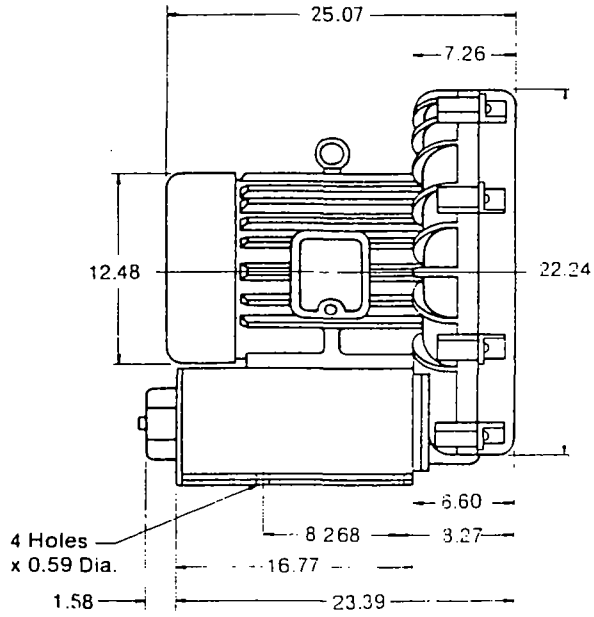

Spencer® VB-110 Vortex Blower

Performance Curve

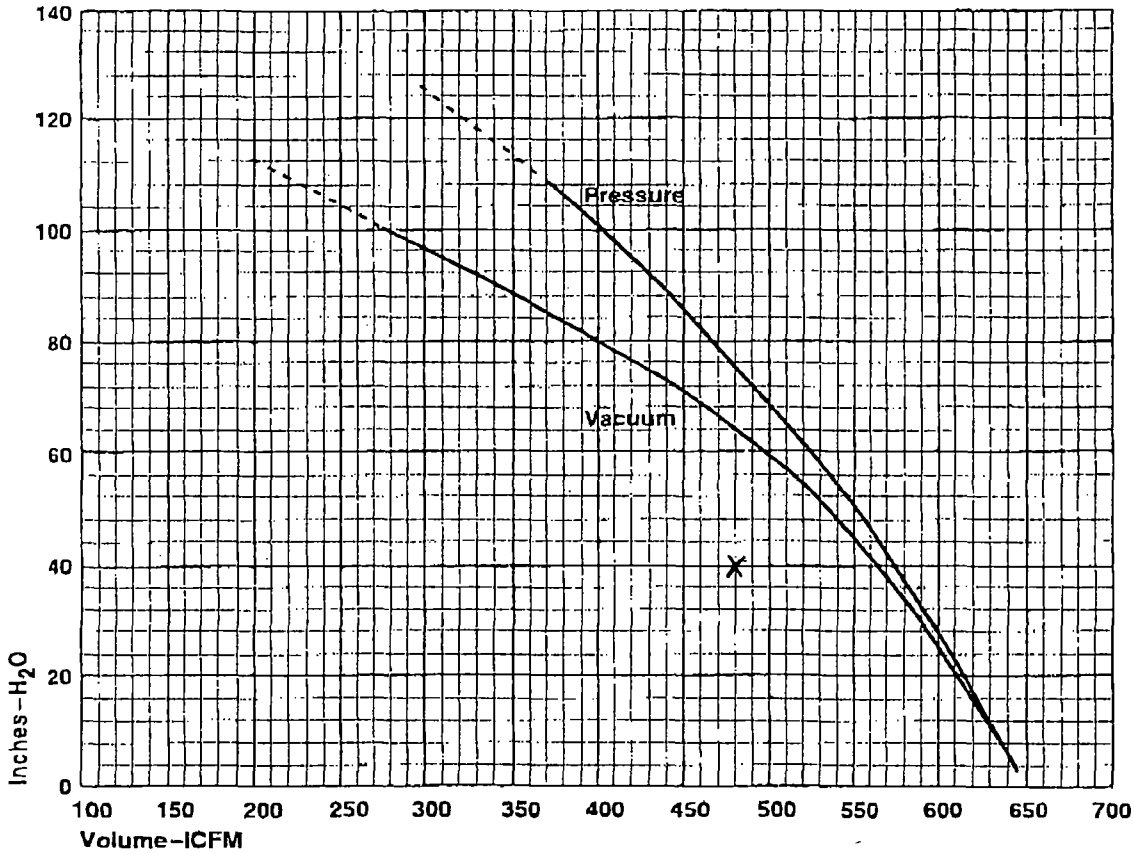

Notes:

1. Atmospheric conditions equal 20°C (68°F) at 29.92 Hg.
2. Measurements taken with unit at operating temperature.
3. Scattering ± 10% on the resistance curve.
4. Continuous operation should be maintained on the solid-line.
5. Specifications subject to change without notice.
6. Vacuum in ICFM.

480 ICFM @ 40" w.c
Discharge Temp. 200°F
Carbon Pressure Drop: 10" w.c, MAX.

Acoustical Noise Notes

1. Inlet and outlet open.
2. At distance of 1.5 meters.
3. ⅓ Octave band center frequency.

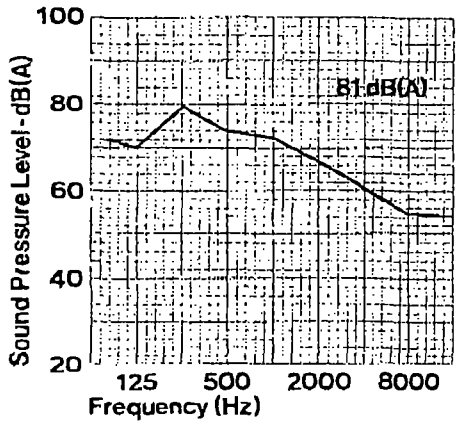

The Spencer Turbine Company 600 Day Hill Road, Windsor, CT 06095-4706
TEL 800-232-4321 • 860-688-8361 • FAX 860-688-0098

Printed in U.S.A.
©1996 The Spencer Turbine Company

Quality design and construction features

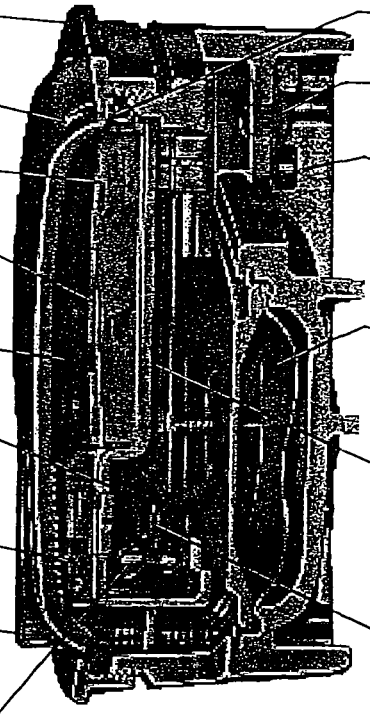

Bezel provides flange for flush mounting in panel.

Clear plastic face is highly resistant to breakage. Provides undistorted viewing of pointer and scale.

Precision litho-printed scale is accurate and easy to read.

Red tipped pointer of heat treated aluminum tubing is easy to see. It is rigidly mounted on helix shaft.

Pointer stops of molded rubber prevent pointer over-travel without damage.

"Wishbone" assembly provides mounting for helix, helix bearings and pointer shaft.

Sapphire bearings are shock-resistant mounted; provide virtually friction-free motion for helix. Motion damped with high viscosity silicone fluid.

Zero adjustment screw is conveniently located in plastic cover, accessible without removing cover. "O" ring seal provides pressure tightness.

"O" ring seal for cover assures pressure integrity of case.

Blowout plug of silicone rubber protects against overpressure on 15 PSIG rated models. Opens at approximately 25 PSIG.

Die cast aluminum case is precision made. Iridite-dipped to withstand 168 hour salt spray test. Exterior finished in baked dark gray hammerloid. One case size used for all standard pressure ranges, and for both surface and flush mounting.

Silicone rubber diaphragm with integrally molded "O" ring is supported by front and rear plates. It is locked and sealed in position with a sealing plate and retaining ring. Diaphragm motion is restricted to prevent *damage due to overpressures.*

Calibrated range spring is a flat leaf of Swedish spring steel in temperature compensated design. Small amplitude of motion assures consistency and long life. It reacts to pressure on diaphragm. Live length adjustable for calibration.

Alnico magnet mounted at one end of range spring rotates helix without mechanical linkages.

Helix is precision milled from an alloy of high magnetic permeability, deburred and annealed in a hydrogen atmosphere for best magnetic qualities. Mounted in jeweled bearings, it turns freely to align with magnetic field of magnet to transmit pressure indication to pointer.

2010AV

SERIES 2000 MAGNEHELIC®— MODELS AND RANGES

The models below will fulfill most requirements. Page 5 also shows examples of special models built for OEM customers. For special scales furnished in ounces per square inch, inches of mercury, metric units, etc., contact the factory.

Dual Scale English/Metric Models			
Model Number	Range In. W.C.	Range Pa or kPa	Price
2000-0D	0-0.5	0-125 Pa	$50.00
2001D	0-1.0	0-250 Pa	50.00
2002D	0-2.0	0-500 Pa	50.00
2003D	0-3.0	0-750 Pa	50.00
2004D	0-0.4	0-1.0 kPa	50.00
2006D	0-1.0	0-1.5 kPa	50.00
2008D	0-8.0	0-2.0 kPa	50.00
2010D	0-10	0-2.5 kPa	50.00

Model Number	Range Inches of Water	Price
2000-0.25	0-.25	$55.00
2000-0.5	0-.50	50.00
2001	0-1.0	50.00
2002	0-2.0	50.00
2003	0-3.0	50.00
2004	0-4.0	50.00
2005	0-5.0	50.00
2006	0-6.0	50.00
2008	0-8.0	50.00
2010	0-10	50.00
2015	0-15	50.00
2020	0-20	50.00
2025	0-25	50.00
2030	0-30	50.00
2040	0-40	50.00
2050	0-50	50.00
2060	0-60	50.00
2080	0-80	50.00
2100	0-100	50.00
2150	0-150	50.00

Model Number	Range Zero Center Inches of Water	Price
2300-0.25	.25-0-.25	$55.00
2301	.5-0-.5	55.00
2302	1-0-1	55.00
2304	2-0-2	55.00
2310	5-0-5	55.00
2320	10-0-10	55.00
2330	15-0-15	55.00

Model Number	Range PSI	Price
2201	0-1	$50.00
2202	0-2	50.00
2203	0-3	50.00
2204	0-4	50.00
2205	0-5	50.00
2210	0-10	81.00
2215	0-15	81.00
2220	0-20	81.00
2230	0-30	100.00

MP option standard
DP option standard

Dual Scale Air Velocity Units		
Model Number	Range In. W.C. Velocity F.P.M.	Price
2000-0AV	0-25/300-2000	$55.00
2000-0AV	0-50/500-2800	50.00
2001AV	0-1.0/500-4000	50.00
2002AV	0-2.0/1000-5600	50.00
2010AV	0-10/2000-12500	50.00

Pitot tube with pitot tube

Model Number	Range MM of Water	Price
2000-5MM	0-5	$55.00
2000-10MM	0-10	50.00
2000-25MM	0-25	50.00
2000-50MM	0-50	50.00
2000-80MM	0-80	50.00
2000-100MM	0-100	50.00

Zero Center Ranges

Model Number	Range MM of Water	Price
2300-20MM	10-0-10	$55.00

Model Number	Range CM of Water	Price
2000-15CM	0-15	$50.00
2000-20CM	0-20	50.00
2000-25CM	0-25	50.00
2000-50CM	0-50	50.00
2000-80CM	0-80	50.00
2000-100CM	0-100	50.00
2000-150CM	0-150	50.00
2000-200CM	0-200	50.00
2000-250CM	0-250	50.00
2000-300CM	0-300	50.00

Zero Center Ranges

Model Number	Range CM of Water	Price
2300-5CM	2.5-0-2.5	$55.00
2300-10CM	5-0-5	55.00
2300-30CM	15-0-15	55.00

These ranges calibrated for vertical scale position

Model Number	Range Pascals	Price
2000-50 Pa	0-50	$55.00
2000-125 Pa	0-125	50.00
2000-250 Pa	0-250	50.00
2000-500 Pa	0-500	50.00
2000-750 Pa	0-750	50.00

Zero Center Ranges

Model Number	Range Pascals	Price
2300-250 Pa	125-0-125	$55.00
2300-500 Pa	250-0-250	55.00

Model Number	Range Kilopascals	Price
2000-0.5 Pa	0-.5	$50.00
2000-1.5 Pa	0-1.5	50.00
2000-2 Pa	0-2	50.00
2000-3 Pa	0-3	50.00
2000-4 Pa	0-4	50.00
2000-5 Pa	0-5	50.00
2000-7.5 Pa	0-7.5	50.00
2000-10 Pa	0-10	50.00
2000-15 Pa	0-15	50.00
2000-20 Pa	0-20	50.00
2000-25 Pa	0-25	50.00
2000-30 Pa	0-30	50.00

Zero Center Ranges

Model Number	Range Kilopascals	Price
2300-1 Pa	.5-0-.5	$55.00
2300-3 Pa	1.5-0-1.5	55.00

Accessories

A-310A 3-Way Vent Valve	$6.90
A-321 Safety Relief Valve	$8.60
A-432 Portable Kit	$19.40
A-605 Air Filter Kit	$19.40
A-610 Pipe Mount Kit	$9.90
Scale Overlays — Red, Green, Mirrored or Combination, Specify Locations add $5.00 Net	

Options — Lower add Suffix LE: 2001-LS

AS (Adjustable Signal Flag)	add $10.00
HP (High Pressure Option)	add $50.00
LT (Low Temperatures to -20°F)	add $3.00
MP (Med. Pressure Option)	add $1.00
SP (Setpoint Indicator)	add $50.00

Special Purpose Ranges

Scale No. 2401 Square Root Specify Range	Scale No. 2402 Blank Scale, Specify Range
Model 2000-00N Range 0-10 to 120" W.C. for room pressure monitoring — $55.00	

Series DS-200 and DS-300 Flow Sensors

For use with the Dwyer Capsuhelic® differential pressure gage to measure high flow rates of air or water in pipes.

The Dwyer flow sensor is an averaging pitot tube providing accurate and convenient flow rate sensing. When purchased with a Dwyer Capsuhelic® differential pressure gage of appropriate range, the result is a flow indicating system delivered off the shelf at an economical price.

Pitot tubes have been used in flow measurement for years. Conventional pitot tubes sense velocity pressure at only one point in the flowing stream. Therefore, a series of measurements must be taken across the stream to obtain a meaningful average flow rate. The Dwyer flow sensor eliminates the need for "traversing" the flowing stream because of its multiple sensing points and built-in averaging capability.

Dwyer Series DS-300 flow sensors are designed to be inserted in the pipeline through a compression fitting. They are furnished with instrument shut-off valves on both pressure connections. Valves are fitted with ⅛" NPT female connections. Accessories include adapters with ¼" SAE 45° flared ends compatible with hoses supplied with the Model A-471 Portable Capsuhelic kit. Standard valves are rated at 200 psig (13.7 bar) and 200°F (93.3°C). Where valves are not required, they can be omitted at reduced cost. Series DS-300 flow sensors are available for pipe sizes from 1" to 10". If replacing a DS-200 flow sensor or using an A-160 thredolet with a DS-300, an optional ¼" X ⅜" bushing, P/N A-161 is required.

DS-200 models are also available in ten insertion lengths from 1" - 10". Operation is similar to DS-300 units. Basic differences are the multi-turn shut-off valves, ⅜" NPT mounting and installed ¼" SAE 45° flared pressure connections.

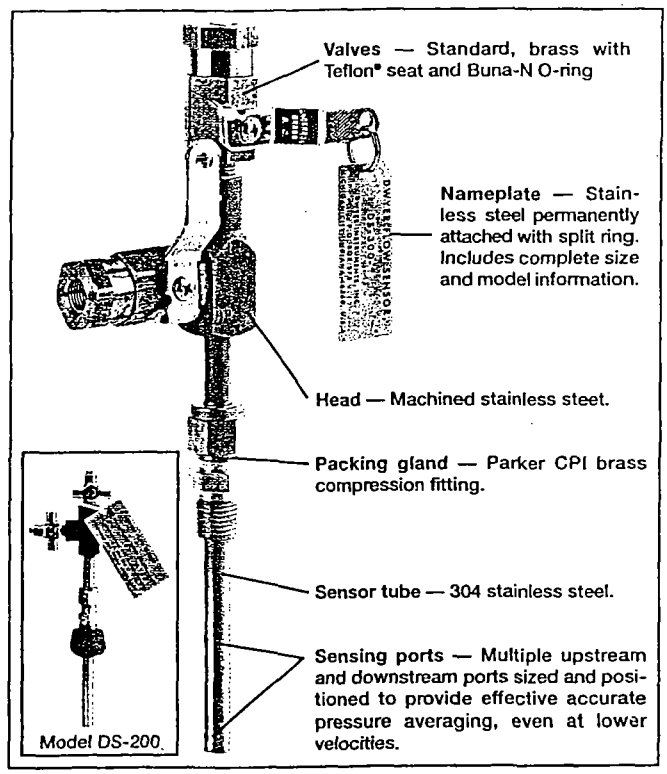

Prices — Select model with suffix which matches pipe size

DS-200-1"	$[redacted] Ⓑ	DS-300-1"	[redacted]
DS-200-1¼"	[redacted] Ⓑ	DS-300-1¼"	[redacted]
DS-200-1½"	[redacted] Ⓑ	DS-300-1½"	[redacted]
DS-200-2"	[redacted] Ⓑ	DS-300-2"	[redacted]
DS-200-2½"	[redacted] Ⓑ	DS-300-2½"	[redacted]
DS-200-3"	[redacted] Ⓑ	DS-300-3"	[redacted]
DS-200-4"	[redacted] Ⓑ	DS-300-4"	[redacted]
DS-200-6"	[redacted] Ⓑ	DS-300-6"	[redacted]
DS-200-8"	[redacted] Ⓑ	DS-300-8"	[redacted]
DS-200-10"	[redacted] Ⓑ	DS-300-10"	[redacted]

A-160 Thredolet, ⅜" NPT, forged steel, 3000 psi ..... [redacted]
A-161 Brass Bushing, ¼" x ⅜" ..... [redacted]
Less Valves (DS-300) To order, add suffix -LV ..... deduct [redacted]
Ⓑ Items subject to Schedule B discounts

Model A-471 Portable Kit

The Dwyer Series 4000 Capsuhelic® differential pressure gage is ideally suited for use as a read-out device with the DS-300 Flow Sensors. The gage may be used on system pressures of up to 500 PSIG even when the flow sensor differential pressure to be read is less than 0.5" w.c. With accuracy of ±3% of full scale, the Capsuhelic® gage can be used in ambient temperatures from 32°F to 200°F. Zero and range adjustments are made from outside the gage. The standard gage with a die cast aluminum housing can be used with the flow sensor for air or oil applications. For water flow measurements, the optional forged brass housing should be specified. The Capsuhelic gage may be panel or surface mounted and permanently plumbed to the flow sensor if desired. The optional A-610 pipe mounting bracket allows the gage to be easily attached to any 1¼"-2" horizontal or vertical pipe.

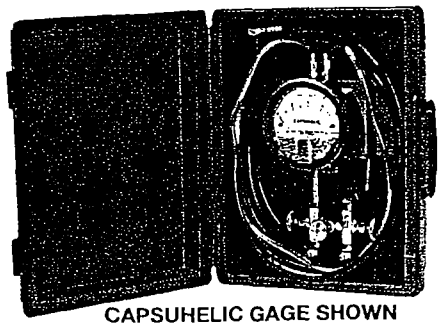

CAPSUHELIC GAGE SHOWN INSTALLED IN A-471 PORTABLE KIT

For portable operation, the A-471 Capsuhelic Portable Gage Kit is available complete with tough polypropylene carrying case, mounting bracket, 3-way manifold valve, two 10' high pressure hoses, and all necessary fittings. See Bulletin A-30-P for complete information on the Capsuhelic gage.

Dwyer Instruments, Inc. P.O. Box 373/Michigan City, Indiana 46361/Phone 219 879-8000/Fax 219 872-9057 • U.K. Phone (01494)-461707 • Australia Phone (02) 9756-5355

Lancaster Laboratories
Where quality is a science.

ENTERED IN DATABASE
BY/DATE DVS 10/31/01
CHECKED BY DGO
DATE 11/13/01

EPA Region 5 Records Ctr.
350085

FAX Cover Page

Pages 36

CONFIDENTIAL MATERIAL

This message is intended only for the use of the individual or entity to which it is addressed and may contain information that is privileged, confidential and exempt from disclosure under applicable law.

If received in error, please notify sender at once and return the original faxed transmission by U. S. Postal Service to the address indicated below. Thank you.

2425 New Holland Pike
Lancaster, PA 17605-2425

Phone: 717-656-2300
Fax: 717-656-2681

Deliver to: Mr. Ken Vogel

Company: 10160 885 031 Mr. Ken Vog DAIMLERCHRYSLER CORPORATIO

Fax: 16514901006

From: Kathy Klinefelter Ext 1566

Message:

Dayton Oct 2001

***** Lancaster Laboratories Analytical Report *****
2425 New Holland Pike, Lancaster, PA 17601

Sample Number: WW3707933 Account: 10160 DAIMLERCHRYSLER CORPORATION
Date Submitted: 10/16/01 Date Reported: NOT REP
Date Collected: 10/15/01

MWB001 Grab Groundwater Sample
Site Code: SC001 RFA# YGQP2001240
Dayton Thermal/Dayton, OH

	ANALYSIS NAME	RESULT		METHOD DETECTION LIMIT	UNITS
6291	TCL by 8260 (water)				
5385	Chloromethane	N.D.		2.	ug/l
5387	Bromomethane	N.D.		2.	ug/l
5386	Vinyl Chloride	N.D.		1.	ug/l
5388	Chloroethane	N.D.		2.	ug/l
5391	Methylene Chloride	N.D.		2.	ug/l
6302	Acetone	12.	J	6.	ug/l
6303	Carbon Disulfide	N.D.		1.	ug/l
5390	1,1-Dichloroethene	N.D.		1.	ug/l
5393	1,1-Dichloroethane	N.D.		1.	ug/l
5396	Chloroform	N.D.		1.	ug/l
5402	1,2-Dichloroethane	N.D.		1.	ug/l
6305	2-Butanone	N.D.		3.	ug/l
5398	1,1,1-Trichloroethane	N.D.		1.	ug/l
5399	Carbon Tetrachloride	N.D.		1.	ug/l
5406	Bromodichloromethane	N.D.		1.	ug/l
5421	1,1,2,2-Tetrachloroethane	N.D.		1.	ug/l
5404	1,2-Dichloropropane	N.D.		1.	ug/l
6306	trans-1,3-Dichloropropene	N.D.		1.	ug/l
5403	Trichloroethene	N.D.		1.	ug/l
5411	Dibromochloromethane	N.D.		1.	ug/l
5408	1,1,2-Trichloroethane	N.D.		1.	ug/l
5401	Benzene	N.D.		1.	ug/l
6307	cis-1,3-Dichloropropene	N.D.		1.	ug/l
5419	Bromoform	N.D.		1.	ug/l
6308	4-Methyl-2-pentanone	N.D.		3.	ug/l
6309	2-Hexanone	N.D.		3.	ug/l
5409	Tetrachloroethene	N.D.		1.	ug/l
5407	Toluene	N.D.		1.	ug/l
5413	Chlorobenzene	N.D.		1.	ug/l
5415	Ethylbenzene	N.D.		1.	ug/l
5418	Styrene	N.D.		1.	ug/l
6310	Xylene (Total)	N.D.		1.	ug/l
5392	trans-1,2-Dichloroethene	N.D.		1.	ug/l

5395	cis-1,2-Dichloroethene	N.D.	1.	ug/l

***** Lancaster Laboratories Analytical Report *****
2425 New Holland Pike, Lancaster, PA 17601

Sample Number: WW3707933 Account: 10160 DAIMLERCHRYSLER CORPORATION

==========

Sample Number: WW3707934 Account: 10160 DAIMLERCHRYSLER CORPORATION
Date Submitted: 10/16/01 Date Reported: NOT REP
Date Collected: 10/15/01

MWC001 Grab Groundwater Sample
Site Code: SC001 RFA# YGQP2001240
Dayton Thermal/Dayton, OH

	ANALYSIS NAME	RESULT	METHOD DETECTION LIMIT	UNITS
6291	TCL by 8260 (water)			
5385	Chloromethane	N.D.	2.	ug/l
5387	Bromomethane	N.D.	2.	ug/l
5386	Vinyl Chloride	N.D.	1.	ug/l
5388	Chloroethane	N.D.	2.	ug/l
5391	Methylene Chloride	N.D.	2.	ug/l
6302	Acetone	N.D.	6.	ug/l
6303	Carbon Disulfide	N.D.	1.	ug/l
5390	1,1-Dichloroethene	N.D.	1.	ug/l
5393	1,1-Dichloroethane	N.D.	1.	ug/l
5396	Chloroform	N.D.	1.	ug/l
5402	1,2-Dichloroethane	N.D.	1.	ug/l
6305	2-Butanone	N.D.	3.	ug/l
5398	1,1,1-Trichloroethane	N.D.	1.	ug/l
5399	Carbon Tetrachloride	N.D.	1.	ug/l
5406	Bromodichloromethane	N.D.	1.	ug/l
5421	1,1,2,2-Tetrachloroethane	N.D.	1.	ug/l
5404	1,2-Dichloropropane	N.D.	1.	ug/l
6306	trans-1,3-Dichloropropene	N.D.	1.	ug/l
5403	Trichloroethene	N.D.	1.	ug/l
5411	Dibromochloromethane	N.D.	1.	ug/l
5408	1,1,2-Trichloroethane	N.D.	1.	ug/l
5401	Benzene	N.D.	1.	ug/l
6307	cis-1,3-Dichloropropene	N.D.	1.	ug/l
5419	Bromoform	N.D.	1.	ug/l
6308	4-Methyl-2-pentanone	N.D.	3.	ug/l
6309	2-Hexanone	N.D.	3.	ug/l
5409	Tetrachloroethene	N.D.	1.	ug/l
5407	Toluene	N.D.	1.	ug/l
5413	Chlorobenzene	N.D.	1.	ug/l
5415	Ethylbenzene	N.D.	1.	ug/l
5418	Styrene	N.D.	1.	ug/l
6310	Xylene (Total)	N.D.	1.	ug/l

5392	trans-1,2-Dichloroethene	N.D.	1.	ug/l

***** Lancaster Laboratories Analytical Report *****
2425 New Holland Pike, Lancaster, PA 17601

Sample Number: WW3707934 Account: 10160 DAIMLERCHRYSLER CORPORATION

5395	cis-1,2-Dichloroethene	N.D.	1.	ug/l

==========

Sample Number: WW3707935 Account: 10160 DAIMLERCHRYSLER CORPORATION
Date Submitted: 10/16/01 Date Reported: NOT REP
Date Collected: 10/15/01

PZ022I Grab Groundwater Sample
Site Code: SC001 RFA# YGQP2001240
Dayton Thermal/Dayton, OH

	ANALYSIS NAME	RESULT	METHOD DETECTION LIMIT	UNITS
6291	TCL by 8260 (water)			
5385	Chloromethane	N.D.	2.	ug/l
5387	Bromomethane	N.D.	2.	ug/l
5386	Vinyl Chloride	N.D.	1.	ug/l
5388	Chloroethane	N.D.	2.	ug/l
5391	Methylene Chloride	N.D.	2.	ug/l
6302	Acetone	N.D.	6.	ug/l
6303	Carbon Disulfide	N.D.	1.	ug/l
5390	1,1-Dichloroethene	N.D.	1.	ug/l
5393	1,1-Dichloroethane	N.D.	1.	ug/l
5396	Chloroform	N.D.	1.	ug/l
5402	1,2-Dichloroethane	N.D.	1.	ug/l
6305	2-Butanone	N.D.	3.	ug/l
5398	1,1,1-Trichloroethane	N.D.	1.	ug/l
5399	Carbon Tetrachloride	N.D.	1.	ug/l
5406	Bromodichloromethane	N.D.	1.	ug/l
5421	1,1,2,2-Tetrachloroethane	N.D.	1.	ug/l
5404	1,2-Dichloropropane	N.D.	1.	ug/l
6306	trans-1,3-Dichloropropene	N.D.	1.	ug/l
5403	Trichloroethene	10.	1.	ug/l
5411	Dibromochloromethane	N.D.	1.	ug/l
5408	1,1,2-Trichloroethane	N.D.	1.	ug/l
5401	Benzene	N.D.	1.	ug/l
6307	cis-1,3-Dichloropropene	N.D.	1.	ug/l
5419	Bromoform	N.D.	1.	ug/l
6308	4-Methyl-2-pentanone	N.D.	3.	ug/l
6309	2-Hexanone	N.D.	3.	ug/l
5409	Tetrachloroethene	N.D.	1.	ug/l
5407	Toluene	N.D.	1.	ug/l
5413	Chlorobenzene	N.D.	1.	ug/l
5415	Ethylbenzene	N.D.	1.	ug/l
5418	Styrene	N.D.	1.	ug/l

6310	Xylene (Total)	N.D.	1.	ug/l

***** Lancaster Laboratories Analytical Report *****
2425 New Holland Pike, Lancaster, PA 17601

Sample Number: WW3707935 Account: 10160 DAIMLERCHRYSLER CORPORATION

5392	trans-1,2-Dichloroethene	N.D.	1.	ug/l
5395	cis-1,2-Dichloroethene	N.D.	1.	ug/l

==========

Sample Number: WW3707936 Account: 10160 DAIMLERCHRYSLER CORPORATION
Date Submitted: 10/16/01 Date Reported: NOT REP
Date Collected: 10/15/01

MWC002 Grab Groundwater Sample
Site Code: SC001 RFA# YGQP2001240
Dayton Thermal/Dayton, OH

	ANALYSIS NAME	RESULT	METHOD DETECTION LIMIT	UNITS
6291	TCL by 8260 (water)			
5385	Chloromethane	N.D.	2.	ug/l
5387	Bromomethane	N.D.	2.	ug/l
5386	Vinyl Chloride	N.D.	1.	ug/l
5388	Chloroethane	N.D.	2.	ug/l
5391	Methylene Chloride	N.D.	2.	ug/l
6302	Acetone	N.D.	6.	ug/l
6303	Carbon Disulfide	N.D.	1.	ug/l
5390	1,1-Dichloroethene	N.D.	1.	ug/l
5393	1,1-Dichloroethane	N.D.	1.	ug/l
5396	Chloroform	N.D.	1.	ug/l
5402	1,2-Dichloroethane	N.D.	1.	ug/l
6305	2-Butanone	N.D.	3.	ug/l
5398	1,1,1-Trichloroethane	N.D.	1.	ug/l
5399	Carbon Tetrachloride	N.D.	1.	ug/l
5406	Bromodichloromethane	N.D.	1.	ug/l
5421	1,1,2,2-Tetrachloroethane	N.D.	1.	ug/l
5404	1,2-Dichloropropane	N.D.	1.	ug/l
6306	trans-1,3-Dichloropropene	N.D.	1.	ug/l
5403	Trichloroethene	N.D.	1.	ug/l
5411	Dibromochloromethane	N.D.	1.	ug/l
5408	1,1,2-Trichloroethane	N.D.	1.	ug/l
5401	Benzene	N.D.	1.	ug/l
6307	cis-1,3-Dichloropropene	N.D.	1.	ug/l
5419	Bromoform	N.D.	1.	ug/l
6308	4-Methyl-2-pentanone	N.D.	3.	ug/l
6309	2-Hexanone	N.D.	3.	ug/l
5409	Tetrachloroethene	N.D.	1.	ug/l
5407	Toluene	N.D.	1.	ug/l
5413	Chlorobenzene	N.D.	1.	ug/l
5415	Ethylbenzene	N.D.	1.	ug/l

5418	Styrene	N.D.	1.	ug/l

***** Lancaster Laboratories Analytical Report *****
2425 New Holland Pike, Lancaster, PA 17601

Sample Number: WW3707936 Account: 10160 DAIMLERCHRYSLER CORPORATION

6310	Xylene (Total)	N.D.	1.	ug/l
5392	trans-1,2-Dichloroethene	N.D.	1.	ug/l
5395	cis-1,2-Dichloroethene	N.D.	1.	ug/l

==========

Sample Number: WW3707937 Account: 10160 DAIMLERCHRYSLER CORPORATION
Date Submitted: 10/16/01 Date Reported: NOT REP
Date Collected: 10/15/01

Field_Blank_1 Grab Water Sample
Site Code: SC001 RFA# YGQP2001240
Dayton Thermal/Dayton, OH

	ANALYSIS NAME	RESULT	METHOD DETECTION LIMIT	UNITS
6291	TCL by 8260 (water)			

A site-specific MSD sample was not submitted for the project. A LCS/LCSD was performed to demonstrate precision and accuracy at a batch level.

==========

5385	Chloromethane	N.D.	2.	ug/l
5387	Bromomethane	N.D.	2.	ug/l
5386	Vinyl Chloride	N.D.	1.	ug/l
5388	Chloroethane	N.D.	2.	ug/l
5391	Methylene Chloride	N.D.	2.	ug/l
6302	Acetone	N.D.	6.	ug/l
6303	Carbon Disulfide	N.D.	1.	ug/l
5390	1,1-Dichloroethene	N.D.	1.	ug/l
5393	1,1-Dichloroethane	N.D.	1.	ug/l
5396	Chloroform	N.D.	1.	ug/l
5402	1,2-Dichloroethane	N.D.	1.	ug/l
6305	2-Butanone	N.D.	3.	ug/l
5398	1,1,1-Trichloroethane	N.D.	1.	ug/l
5399	Carbon Tetrachloride	N.D.	1.	ug/l
5406	Bromodichloromethane	N.D.	1.	ug/l
5421	1,1,2,2-Tetrachloroethane	N.D.	1.	ug/l
5404	1,2-Dichloropropane	N.D.	1.	ug/l
6306	trans-1,3-Dichloropropene	N.D.	1.	ug/l
5403	Trichloroethene	N.D.	1.	ug/l
5411	Dibromochloromethane	N.D.	1.	ug/l
5408	1,1,2-Trichloroethane	N.D.	1.	ug/l
5401	Benzene	N.D.	1.	ug/l
6307	cis-1,3-Dichloropropene	N.D.	1.	ug/l
5419	Bromoform	N.D.	1.	ug/l
6308	4-Methyl-2-pentanone	N.D.	3.	ug/l

6309	2-Hexanone	N.D.	3.	ug/l

***** Lancaster Laboratories Analytical Report *****
2425 New Holland Pike, Lancaster, PA 17601

Sample Number: WW3707937 Account: 10160 DAIMLERCHRYSLER CORPORATION

5409	Tetrachloroethene	N.D.	1.	ug/l
5407	Toluene	N.D.	1.	ug/l
5413	Chlorobenzene	N.D.	1.	ug/l
5415	Ethylbenzene	N.D.	1.	ug/l
5418	Styrene	N.D.	1.	ug/l
6310	Xylene (Total)	N.D.	1.	ug/l
5392	trans-1,2-Dichloroethene	N.D.	1.	ug/l
5395	cis-1,2-Dichloroethene	N.D.	1.	ug/l

==========

Sample Number: WW3707938 Account: 10160 DAIMLERCHRYSLER CORPORATION
Date Submitted: 10/16/01 Date Reported: NOT REP
Date Collected: 10/15/01

MWB002 Grab Groundwater Sample
Site Code: SC001 RFA# YGQP2001240
Dayton Thermal/Dayton, OH

	ANALYSIS NAME	RESULT		METHOD DETECTION LIMIT	UNITS
6291	TCL by 8260 (water)				

A site-specific MSD sample was not submitted for the project. A LCS/LCSD was performed to demonstrate precision and accuracy at a batch level.

==========

5385	Chloromethane	N.D.		2.	ug/l
5387	Bromomethane	N.D.		2.	ug/l
5386	Vinyl Chloride	2.	J	1.	ug/l
5388	Chloroethane	N.D.		2.	ug/l
5391	Methylene Chloride	N.D.		2.	ug/l
6302	Acetone	7.	J	6.	ug/l
6303	Carbon Disulfide	N.D.		1.	ug/l
5390	1,1-Dichloroethene	N.D.		1.	ug/l
5393	1,1-Dichloroethane	N.D.		1.	ug/l
5396	Chloroform	N.D.		1.	ug/l
5402	1,2-Dichloroethane	N.D.		1.	ug/l
6305	2-Butanone	N.D.		3.	ug/l
5398	1,1,1-Trichloroethane	N.D.		1.	ug/l
5399	Carbon Tetrachloride	N.D.		1.	ug/l
5406	Bromodichloromethane	N.D.		1.	ug/l
5421	1,1,2,2-Tetrachloroethane	N.D.		1.	ug/l
5404	1,2-Dichloropropane	N.D.		1.	ug/l
6306	trans-1,3-Dichloropropene	N.D.		1.	ug/l
5403	Trichloroethene	N.D.		1.	ug/l
5411	Dibromochloromethane	N.D.		1.	ug/l

5408	1,1,2-Trichloroethane	N.D.	1.	ug/l

***** Lancaster Laboratories Analytical Report *****
2425 New Holland Pike, Lancaster, PA 17601

Sample Number: WW3707938 Account: 10160 DAIMLERCHRYSLER CORPORATION

5401	Benzene	N.D.	1.	ug/l
6307	cis-1,3-Dichloropropene	N.D.	1.	ug/l
5419	Bromoform	N.D.	1.	ug/l
6308	4-Methyl-2-pentanone	N.D.	3.	ug/l
6309	2-Hexanone	N.D.	3.	ug/l
5409	Tetrachloroethene	N.D.	1.	ug/l
5407	Toluene	N.D.	1.	ug/l
5413	Chlorobenzene	N.D.	1.	ug/l
5415	Ethylbenzene	N.D.	1.	ug/l
5418	Styrene	N.D.	1.	ug/l
6310	Xylene (Total)	N.D.	1.	ug/l
5392	trans-1,2-Dichloroethene	N.D.	1.	ug/l
5395	cis-1,2-Dichloroethene	N.D.	1.	ug/l

==========

Sample Number: WW3707939 Account: 10160 DAIMLERCHRYSLER CORPORATION
Date Submitted: 10/16/01 Date Reported: NOT REP
Date Collected: 10/15/01

MW018S Grab Groundwater Sample
Site Code: SC001 RFA# YGQP2001240
Dayton Thermal/Dayton, OH

	ANALYSIS NAME	RESULT		METHOD DETECTION LIMIT	UNITS
6291	TCL by 8260 (water)				

A site-specific MSD sample was not submitted for the project. A LCS/LCSD was performed to demonstrate precision and accuracy at a batch level.

==========

5385	Chloromethane	N.D.		2.	ug/l
5387	Bromomethane	N.D.		2.	ug/l
5386	Vinyl Chloride	N.D.		1.	ug/l
5388	Chloroethane	9.		2.	ug/l
5391	Methylene Chloride	N.D.		2.	ug/l
6302	Acetone	10.	J	6.	ug/l
6303	Carbon Disulfide	N.D.		1.	ug/l
5390	1,1-Dichloroethene	3.	J	1.	ug/l
5393	1,1-Dichloroethane	42.		1.	ug/l
5396	Chloroform	N.D.		1.	ug/l
5402	1,2-Dichloroethane	N.D.		1.	ug/l
6305	2-Butanone	N.D.		3.	ug/l
5398	1,1,1-Trichloroethane	45.		1.	ug/l
5399	Carbon Tetrachloride	N.D.		1.	ug/l
5406	Bromodichloromethane	N.D.		1.	ug/l

5421	1,1,2,2-Tetrachloroethane	N.D.	1.	ug/l

***** Lancaster Laboratories Analytical Report *****
2425 New Holland Pike, Lancaster, PA 17601

Sample Number: WW3707939 Account: 10160 DAIMLERCHRYSLER CORPORATION

5404	1,2-Dichloropropane	N.D.		1.	ug/l
6306	trans-1,3-Dichloropropene	N.D.		1.	ug/l
5403	Trichloroethene	45.		1.	ug/l
5411	Dibromochloromethane	N.D.		1.	ug/l
5408	1,1,2-Trichloroethane	N.D.		1.	ug/l
5401	Benzene	N.D.		1.	ug/l
6307	cis-1,3-Dichloropropene	N.D.		1.	ug/l
5419	Bromoform	N.D.		1.	ug/l
6308	4-Methyl-2-pentanone	N.D.		3.	ug/l
6309	2-Hexanone	N.D.		3.	ug/l
5409	Tetrachloroethene	510.		5.	ug/l
5407	Toluene	N.D.		1.	ug/l
5413	Chlorobenzene	N.D.		1.	ug/l
5415	Ethylbenzene	N.D.		1.	ug/l
5418	Styrene	N.D.		1.	ug/l
6310	Xylene (Total)	N.D.		1.	ug/l
5392	trans-1,2-Dichloroethene	1.	J	1.	ug/l
5395	cis-1,2-Dichloroethene	65.		1.	ug/l

==========

Sample Number: WW3707940 Account: 10160 DAIMLERCHRYSLER CORPORATION
Date Submitted: 10/16/01 Date Reported: NOT REP
Date Collected: 10/15/01

PZ019I Grab Groundwater Sample
Site Code: SC001 RFA# YGQP2001240
Dayton Thermal/Dayton, OH

	ANALYSIS NAME	RESULT	METHOD DETECTION LIMIT	UNITS
6291	TCL by 8260 (water)			

A site-specific MSD sample was not submitted for the project. A LCS/LCSD was performed to demonstrate precision and accuracy at a batch level.

==========

5385	Chloromethane	N.D.	2.	ug/l
5387	Bromomethane	N.D.	2.	ug/l
5386	Vinyl Chloride	N.D.	1.	ug/l
5388	Chloroethane	N.D.	2.	ug/l
5391	Methylene Chloride	N.D.	2.	ug/l
6302	Acetone	N.D.	6.	ug/l
6303	Carbon Disulfide	N.D.	1.	ug/l
5390	1,1-Dichloroethene	N.D.	1.	ug/l
5393	1,1-Dichloroethane	N.D.	1.	ug/l
5396	Chloroform	N.D.	1.	ug/l

5402	1,2-Dichloroethane	N.D.	1.	ug/l

***** Lancaster Laboratories Analytical Report *****
2425 New Holland Pike, Lancaster, PA 17601

Sample Number: WW3707940 Account: 10160 DAIMLERCHRYSLER CORPORATION

6305	2-Butanone	N.D.	3.	ug/l
5398	1,1,1-Trichloroethane	N.D.	1.	ug/l
5399	Carbon Tetrachloride	N.D.	1.	ug/l
5406	Bromodichloromethane	N.D.	1.	ug/l
5421	1,1,2,2-Tetrachloroethane	N.D.	1.	ug/l
5404	1,2-Dichloropropane	N.D.	1.	ug/l
6306	trans-1,3-Dichloropropene	N.D.	1.	ug/l
5403	Trichloroethene	9.	1.	ug/l
5411	Dibromochloromethane	N.D.	1.	ug/l
5408	1,1,2-Trichloroethane	N.D.	1.	ug/l
5401	Benzene	N.D.	1.	ug/l
6307	cis-1,3-Dichloropropene	N.D.	1.	ug/l
5419	Bromoform	N.D.	1.	ug/l
6308	4-Methyl-2-pentanone	N.D.	3.	ug/l
6309	2-Hexanone	N.D.	3.	ug/l
5409	Tetrachloroethene	N.D.	1.	ug/l
5407	Toluene	N.D.	1.	ug/l
5413	Chlorobenzene	N.D.	1.	ug/l
5415	Ethylbenzene	N.D.	1.	ug/l
5418	Styrene	N.D.	1.	ug/l
6310	Xylene (Total)	N.D.	1.	ug/l
5392	trans-1,2-Dichloroethene	N.D.	1.	ug/l
5395	cis-1,2-Dichloroethene	6.	1.	ug/l

==========

Sample Number: WW3707941 Account: 10160 DAIMLERCHRYSLER CORPORATION
Date Submitted: 10/16/01 Date Reported: NOT REP
Date Collected: 10/15/01

MW019S Grab Groundwater Sample
Site Code: SC001 RFA# YGQP2001240
Dayton Thermal/Dayton, OH

	ANALYSIS NAME	RESULT	METHOD DETECTION LIMIT	UNITS
6291	TCL by 8260 (water)			

A site-specific MSD sample was not submitted for the project. A LCS/LCSD was performed to demonstrate precision and accuracy at a batch level.

==========

5385	Chloromethane	N.D.	2.	ug/l
5387	Bromomethane	N.D.	2.	ug/l
5386	Vinyl Chloride	N.D.	1.	ug/l
5388	Chloroethane	N.D.	2.	ug/l
5391	Methylene Chloride	N.D.	2.	ug/l

6302	Acetone	8.	J	6.	ug/l

***** Lancaster Laboratories Analytical Report *****
2425 New Holland Pike, Lancaster, PA 17601

Sample Number: WW3707941 Account: 10160 DAIMLERCHRYSLER CORPORATION

6303	Carbon Disulfide	N.D.		1.	ug/l
5390	1,1-Dichloroethene	N.D.		1.	ug/l
5393	1,1-Dichloroethane	N.D.		1.	ug/l
5396	Chloroform	N.D.		1.	ug/l
5402	1,2-Dichloroethane	N.D.		1.	ug/l
6305	2-Butanone	N.D.		3.	ug/l
5398	1,1,1-Trichloroethane	1.	J	1.	ug/l
5399	Carbon Tetrachloride	N.D.		1.	ug/l
5406	Bromodichloromethane	N.D.		1.	ug/l
5421	1,1,2,2-Tetrachloroethane	N.D.		1.	ug/l
5404	1,2-Dichloropropane	N.D.		1.	ug/l
6306	trans-1,3-Dichloropropene	N.D.		1.	ug/l
5403	Trichloroethene	1.	J	1.	ug/l
5411	Dibromochloromethane	N.D.		1.	ug/l
5408	1,1,2-Trichloroethane	N.D.		1.	ug/l
5401	Benzene	N.D.		1.	ug/l
6307	cis-1,3-Dichloropropene	N.D.		1.	ug/l
5419	Bromoform	N.D.		1.	ug/l
6308	4-Methyl-2-pentanone	N.D.		3.	ug/l
6309	2-Hexanone	N.D.		3.	ug/l
5409	Tetrachloroethene	2.	J	1.	ug/l
5407	Toluene	N.D.		1.	ug/l
5413	Chlorobenzene	N.D.		1.	ug/l
5415	Ethylbenzene	N.D.		1.	ug/l
5418	Styrene	N.D.		1.	ug/l
6310	Xylene (Total)	N.D.		1.	ug/l
5392	trans-1,2-Dichloroethene	N.D.		1.	ug/l
5395	cis-1,2-Dichloroethene	N.D.		1.	ug/l

==========

Sample Number: WW3707942 Account: 10160 DAIMLERCHRYSLER CORPORATION
Date Submitted: 10/16/01 Date Reported: NOT REP
Date Collected: 10/15/01

MWB004 Grab Groundwater Sample
Site Code: SC001 RFA# YGQP2001240
Dayton Thermal/Dayton, OH

	ANALYSIS NAME	RESULT	METHOD DETECTION LIMIT	UNITS
6291	TCL by 8260 (water)			

A site-specific MSD sample was not submitted for the project. A LCS/LCSD was performed to demonstrate precision and accuracy at a batch level.

==========

5385	Chloromethane	N.D.	2.	ug/l

***** Lancaster Laboratories Analytical Report *****
2425 New Holland Pike, Lancaster, PA 17601

Sample Number: WW3707942 Account: 10160 DAIMLERCHRYSLER CORPORATION

5387	Bromomethane	N.D.		2.	ug/l
5386	Vinyl Chloride	N.D.		1.	ug/l
5388	Chloroethane	N.D.		2.	ug/l
5391	Methylene Chloride	N.D.		2.	ug/l
6302	Acetone	N.D.		6.	ug/l
6303	Carbon Disulfide	N.D.		1.	ug/l
5390	1,1-Dichloroethene	N.D.		1.	ug/l
5393	1,1-Dichloroethane	N.D.		1.	ug/l
5396	Chloroform	N.D.		1.	ug/l
5402	1,2-Dichloroethane	N.D.		1.	ug/l
6305	2-Butanone	N.D.		3.	ug/l
5398	1,1,1-Trichloroethane	N.D.		1.	ug/l
5399	Carbon Tetrachloride	N.D.		1.	ug/l
5406	Bromodichloromethane	N.D.		1.	ug/l
5421	1,1,2,2-Tetrachloroethane	N.D.		1.	ug/l
5404	1,2-Dichloropropane	N.D.		1.	ug/l
6306	trans-1,3-Dichloropropene	N.D.		1.	ug/l
5403	Trichloroethene	4.	J	1.	ug/l
5411	Dibromochloromethane	N.D.		1.	ug/l
5408	1,1,2-Trichloroethane	N.D.		1.	ug/l
5401	Benzene	N.D.		1.	ug/l
6307	cis-1,3-Dichloropropene	N.D.		1.	ug/l
5419	Bromoform	N.D.		1.	ug/l
6308	4-Methyl-2-pentanone	N.D.		3.	ug/l
6309	2-Hexanone	N.D.		3.	ug/l
5409	Tetrachloroethene	N.D.		1.	ug/l
5407	Toluene	N.D.		1.	ug/l
5413	Chlorobenzene	N.D.		1.	ug/l
5415	Ethylbenzene	N.D.		1.	ug/l
5418	Styrene	N.D.		1.	ug/l
6310	Xylene (Total)	N.D.		1.	ug/l
5392	trans-1,2-Dichloroethene	N.D.		1.	ug/l
5395	cis-1,2-Dichloroethene	N.D.		1.	ug/l

==========

Sample Number: WW3707943 Account: 10160 DAIMLERCHRYSLER CORPORATION
Date Submitted: 10/16/01 Date Reported: NOT REP
Date Collected: 10/15/01

PZ021I Grab Groundwater Sample
Site Code: SC001 RFA# YGQP2001240
Dayton Thermal/Dayton, OH

ANALYSIS NAME	RESULT	METHOD DETECTION LIMIT	UNITS

6291 TCL by 8260 (water)

***** Lancaster Laboratories Analytical Report *****
2425 New Holland Pike, Lancaster, PA 17601

Sample Number: WW3707943 Account: 10160 DAIMLERCHRYSLER CORPORATION

A site-specific MSD sample was not submitted for the project. A LCS/LCSD was performed to demonstrate precision and accuracy at a batch level.

==========

5385	Chloromethane	N.D.	2.	ug/l
5387	Bromomethane	N.D.	2.	ug/l
5386	Vinyl Chloride	N.D.	1.	ug/l
5388	Chloroethane	N.D.	2.	ug/l
5391	Methylene Chloride	N.D.	2.	ug/l
6302	Acetone	N.D.	6.	ug/l
6303	Carbon Disulfide	N.D.	1.	ug/l
5390	1,1-Dichloroethene	N.D.	1.	ug/l
5393	1,1-Dichloroethane	N.D.	1.	ug/l
5396	Chloroform	N.D.	1.	ug/l
5402	1,2-Dichloroethane	N.D.	1.	ug/l
6305	2-Butanone	N.D.	3.	ug/l
5398	1,1,1-Trichloroethane	N.D.	1.	ug/l
5399	Carbon Tetrachloride	N.D.	1.	ug/l
5406	Bromodichloromethane	N.D.	1.	ug/l
5421	1,1,2,2-Tetrachloroethane	N.D.	1.	ug/l
5404	1,2-Dichloropropane	N.D.	1.	ug/l
6306	trans-1,3-Dichloropropene	N.D.	1.	ug/l
5403	Trichloroethene	9.	1.	ug/l
5411	Dibromochloromethane	N.D.	1.	ug/l
5408	1,1,2-Trichloroethane	N.D.	1.	ug/l
5401	Benzene	N.D.	1.	ug/l
6307	cis-1,3-Dichloropropene	N.D.	1.	ug/l
5419	Bromoform	N.D.	1.	ug/l
6308	4-Methyl-2-pentanone	N.D.	3.	ug/l
6309	2-Hexanone	N.D.	3.	ug/l
5409	Tetrachloroethene	N.D.	1.	ug/l
5407	Toluene	N.D.	1.	ug/l
5413	Chlorobenzene	N.D.	1.	ug/l
5415	Ethylbenzene	N.D.	1.	ug/l
5418	Styrene	N.D.	1.	ug/l
6310	Xylene (Total)	N.D.	1.	ug/l
5392	trans-1,2-Dichloroethene	N.D.	1.	ug/l
5395	cis-1,2-Dichloroethene	6.	1.	ug/l

==========

***** Lancaster Laboratories Analytical Report *****
2425 New Holland Pike, Lancaster, PA 17601

Sample Number: WW3707944 Account: 10160 DAIMLERCHRYSLER CORPORATION
Date Submitted: 10/16/01 Date Reported: NOT REP
Date Collected: 10/15/01

PZ017D Grab Groundwater Sample
Site Code: SC001 RFA# YGQP2001240
Dayton Thermal/Dayton, OH

	ANALYSIS NAME	RESULT	METHOD DETECTION LIMIT	UNITS
6291	TCL by 8260 (water)			

A site-specific MSD sample was not submitted for the project. A LCS/LCSD was performed to demonstrate precision and accuracy at a batch level.
==========

5385	Chloromethane	N.D.	2.	ug/l
5387	Bromomethane	N.D.	2.	ug/l
5386	Vinyl Chloride	15.	1.	ug/l
5388	Chloroethane	N.D.	2.	ug/l
5391	Methylene Chloride	N.D.	2.	ug/l
6302	Acetone	N.D.	6.	ug/l
6303	Carbon Disulfide	N.D.	1.	ug/l
5390	1,1-Dichloroethene	N.D.	1.	ug/l
5393	1,1-Dichloroethane	N.D.	1.	ug/l
5396	Chloroform	N.D.	1.	ug/l
5402	1,2-Dichloroethane	N.D.	1.	ug/l
6305	2-Butanone	N.D.	3.	ug/l
5398	1,1,1-Trichloroethane	N.D.	1.	ug/l
5399	Carbon Tetrachloride	N.D.	1.	ug/l
5406	Bromodichloromethane	N.D.	1.	ug/l
5421	1,1,2,2-Tetrachloroethane	N.D.	1.	ug/l
5404	1,2-Dichloropropane	N.D.	1.	ug/l
6306	trans-1,3-Dichloropropene	N.D.	1.	ug/l
5403	Trichloroethene	N.D.	1.	ug/l
5411	Dibromochloromethane	N.D.	1.	ug/l
5408	1,1,2-Trichloroethane	N.D.	1.	ug/l
5401	Benzene	N.D.	1.	ug/l
6307	cis-1,3-Dichloropropene	N.D.	1.	ug/l
5419	Bromoform	N.D.	1.	ug/l
6308	4-Methyl-2-pentanone	N.D.	3.	ug/l
6309	2-Hexanone	N.D.	3.	ug/l
5409	Tetrachloroethene	N.D.	1.	ug/l
5407	Toluene	N.D.	1.	ug/l
5413	Chlorobenzene	N.D.	1.	ug/l

5415	Ethylbenzene	N.D.	1.	ug/l

***** Lancaster Laboratories Analytical Report *****
2425 New Holland Pike, Lancaster, PA 17601

Sample Number: WW3707944 Account: 10160 DAIMLERCHRYSLER CORPORATION

5418	Styrene	N.D.		1.	ug/l
6310	Xylene (Total)	N.D.		1.	ug/l
5392	trans-1,2-Dichloroethene	N.D.		1.	ug/l
5395	cis-1,2-Dichloroethene	3.	J	1.	ug/l

==========

Sample Number: WW3707945 Account: 10160 DAIMLERCHRYSLER CORPORATION
Date Submitted: 10/16/01 Date Reported: NOT REP
Date Collected: 10/15/01

MW020S Grab Groundwater Sample
Site Code: SC001 RFA# YGQP2001240
Dayton Thermal/Dayton, OH

	ANALYSIS NAME	RESULT		METHOD DETECTION LIMIT	UNITS
6291	TCL by 8260 (water)				

A site-specific MSD sample was not submitted for the project. A LCS/LCSD was performed to demonstrate precision and accuracy at a batch level.

==========

5385	Chloromethane	N.D.		2.	ug/l
5387	Bromomethane	N.D.		2.	ug/l
5386	Vinyl Chloride	N.D.		1.	ug/l
5388	Chloroethane	N.D.		2.	ug/l
5391	Methylene Chloride	N.D.		2.	ug/l
6302	Acetone	10.	J	6.	ug/l
6303	Carbon Disulfide	N.D.		1.	ug/l
5390	1,1-Dichloroethene	N.D.		1.	ug/l
5393	1,1-Dichloroethane	N.D.		1.	ug/l
5396	Chloroform	N.D.		1.	ug/l
5402	1,2-Dichloroethane	N.D.		1.	ug/l
6305	2-Butanone	N.D.		3.	ug/l
5398	1,1,1-Trichloroethane	1.	J	1.	ug/l
5399	Carbon Tetrachloride	N.D.		1.	ug/l
5406	Bromodichloromethane	N.D.		1.	ug/l
5421	1,1,2,2-Tetrachloroethane	N.D.		1.	ug/l
5404	1,2-Dichloropropane	N.D.		1.	ug/l
6306	trans-1,3-Dichloropropene	N.D.		1.	ug/l
5403	Trichloroethene	3.	J	1.	ug/l
5411	Dibromochloromethane	N.D.		1.	ug/l
5408	1,1,2-Trichloroethane	N.D.		1.	ug/l
5401	Benzene	N.D.		1.	ug/l
6307	cis-1,3-Dichloropropene	N.D.		1.	ug/l
5419	Bromoform	N.D.		1.	ug/l

6308	4-Methyl-2-pentanone	N.D.	3.	ug/l

***** Lancaster Laboratories Analytical Report *****
2425 New Holland Pike, Lancaster, PA 17601

Sample Number: WW3707945 Account: 10160 DAIMLERCHRYSLER CORPORATION

6309	2-Hexanone	N.D.	3.	ug/l
5409	Tetrachloroethene	N.D.	1.	ug/l
5407	Toluene	N.D.	1.	ug/l
5413	Chlorobenzene	N.D.	1.	ug/l
5415	Ethylbenzene	N.D.	1.	ug/l
5418	Styrene	N.D.	1.	ug/l
6310	Xylene (Total)	N.D.	1.	ug/l
5392	trans-1,2-Dichloroethene	N.D.	1.	ug/l
5395	cis-1,2-Dichloroethene	N.D.	1.	ug/l

==========

Sample Number: WW3707946 Account: 10160 DAIMLERCHRYSLER CORPORATION
Date Submitted: 10/16/01 Date Reported: NOT REP
Date Collected: 10/15/01

PZ020D Grab Groundwater Sample
Site Code: SC001 RFA# YGQP2001240
Dayton Thermal/Dayton, OH

	ANALYSIS NAME	RESULT		METHOD DETECTION LIMIT	UNITS
6291	TCL by 8260 (water)				

A site-specific MSD sample was not submitted for the project. A LCS/LCSD was performed to demonstrate precision and accuracy at a batch level.

==========

5385	Chloromethane	N.D.		2.	ug/l
5387	Bromomethane	N.D.		2.	ug/l
5386	Vinyl Chloride	3.	J	1.	ug/l
5388	Chloroethane	N.D.		2.	ug/l
5391	Methylene Chloride	N.D.		2.	ug/l
6302	Acetone	N.D.		6.	ug/l
6303	Carbon Disulfide	N.D.		1.	ug/l
5390	1,1-Dichloroethene	N.D.		1.	ug/l
5393	1,1-Dichloroethane	N.D.		1.	ug/l
5396	Chloroform	N.D.		1.	ug/l
5402	1,2-Dichloroethane	N.D.		1.	ug/l
6305	2-Butanone	N.D.		3.	ug/l
5398	1,1,1-Trichloroethane	N.D.		1.	ug/l
5399	Carbon Tetrachloride	N.D.		1.	ug/l
5406	Bromodichloromethane	N.D.		1.	ug/l
5421	1,1,2,2-Tetrachloroethane	N.D.		1.	ug/l
5404	1,2-Dichloropropane	N.D.		1.	ug/l
6306	trans-1,3-Dichloropropene	N.D.		1.	ug/l
5403	Trichloroethene	1.	J	1.	ug/l

5411	Dibromochloromethane	N.D.	1.	ug/l

***** Lancaster Laboratories Analytical Report *****
2425 New Holland Pike, Lancaster, PA 17601

Sample Number: WW3707946 Account: 10160 DAIMLERCHRYSLER CORPORATION

5408	1,1,2-Trichloroethane	N.D.	1.	ug/l
5401	Benzene	N.D.	1.	ug/l
6307	cis-1,3-Dichloropropene	N.D.	1.	ug/l
5419	Bromoform	N.D.	1.	ug/l
6308	4-Methyl-2-pentanone	N.D.	3.	ug/l
6309	2-Hexanone	N.D.	3.	ug/l
5409	Tetrachloroethene	N.D.	1.	ug/l
5407	Toluene	N.D.	1.	ug/l
5413	Chlorobenzene	N.D.	1.	ug/l
5415	Ethylbenzene	N.D.	1.	ug/l
5418	Styrene	N.D.	1.	ug/l
6310	Xylene (Total)	N.D.	1.	ug/l
5392	trans-1,2-Dichloroethene	N.D.	1.	ug/l
5395	cis-1,2-Dichloroethene	N.D.	1.	ug/l

==========

Sample Number: WW3707947 Account: 10160 DAIMLERCHRYSLER CORPORATION
Date Submitted: 10/16/01 Date Reported: NOT REP
Date Collected: 10/15/01

PZ012D Grab Groundwater Sample
Site Code: SC001 RFA# YGQP2001240
Dayton Thermal/Dayton, OH

	ANALYSIS NAME	RESULT	METHOD DETECTION LIMIT	UNITS
6291	TCL by 8260 (water)			

A site-specific MSD sample was not submitted for the project. A LCS/LCSD was performed to demonstrate precision and accuracy at a batch level.

==========

5385	Chloromethane	N.D.	2.	ug/l
5387	Bromomethane	N.D.	2.	ug/l
5386	Vinyl Chloride	N.D.	1.	ug/l
5388	Chloroethane	N.D.	2.	ug/l
5391	Methylene Chloride	N.D.	2.	ug/l
6302	Acetone	N.D.	6.	ug/l
6303	Carbon Disulfide	N.D.	1.	ug/l
5390	1,1-Dichloroethene	N.D.	1.	ug/l
5393	1,1-Dichloroethane	N.D.	1.	ug/l
5396	Chloroform	N.D.	1.	ug/l
5402	1,2-Dichloroethane	N.D.	1.	ug/l
6305	2-Butanone	N.D.	3.	ug/l
5398	1,1,1-Trichloroethane	N.D.	1.	ug/l
5399	Carbon Tetrachloride	N.D.	1.	ug/l

5406	Bromodichloromethane	N.D.		1.	ug/l

***** Lancaster Laboratories Analytical Report *****
2425 New Holland Pike, Lancaster, PA 17601

Sample Number: WW3707947 Account: 10160 DAIMLERCHRYSLER CORPORATION

5421	1,1,2,2-Tetrachloroethane	N.D.		1.	ug/l
5404	1,2-Dichloropropane	N.D.		1.	ug/l
6306	trans-1,3-Dichloropropene	N.D.		1.	ug/l
5403	Trichloroethene	2.	J	1.	ug/l
5411	Dibromochloromethane	N.D.		1.	ug/l
5408	1,1,2-Trichloroethane	N.D.		1.	ug/l
5401	Benzene	N.D.		1.	ug/l
6307	cis-1,3-Dichloropropene	N.D.		1.	ug/l
5419	Bromoform	N.D.		1.	ug/l
6308	4-Methyl-2-pentanone	N.D.		3.	ug/l
6309	2-Hexanone	N.D.		3.	ug/l
5409	Tetrachloroethene	N.D.		1.	ug/l
5407	Toluene	N.D.		1.	ug/l
5413	Chlorobenzene	N.D.		1.	ug/l
5415	Ethylbenzene	N.D.		1.	ug/l
5418	Styrene	N.D.		1.	ug/l
6310	Xylene (Total)	N.D.		1.	ug/l
5392	trans-1,2-Dichloroethene	N.D.		1.	ug/l
5395	cis-1,2-Dichloroethene	N.D.		1.	ug/l

==========

Sample Number: WW3707948 Account: 10160 DAIMLERCHRYSLER CORPORATION
Date Submitted: 10/16/01 Date Reported: NOT REP
Date Collected: 10/15/01

PZ012I Grab Groundwater Sample
Site Code: SC001 RFA# YGQP2001240
Dayton Thermal/Dayton, OH

	ANALYSIS NAME	RESULT		METHOD DETECTION LIMIT	UNITS
6291	TCL by 8260 (water)				

A site-specific MSD sample was not submitted for the project. A LCS/LCSD was performed to demonstrate precision and accuracy at a batch level.

==========

5385	Chloromethane	N.D.		2.	ug/l
5387	Bromomethane	N.D.		2.	ug/l
5386	Vinyl Chloride	2.	J	1.	ug/l
5388	Chloroethane	N.D.		2.	ug/l
5391	Methylene Chloride	N.D.		2.	ug/l
6302	Acetone	N.D.		6.	ug/l
6303	Carbon Disulfide	N.D.		1.	ug/l
5390	1,1-Dichloroethene	2.	J	1.	ug/l
5393	1,1-Dichloroethane	3.	J	1.	ug/l

5396	Chloroform	N.D.	1.	ug/l

***** Lancaster Laboratories Analytical Report *****
2425 New Holland Pike, Lancaster, PA 17601

Sample Number: WW3707948 Account: 10160 DAIMLERCHRYSLER CORPORATION

5402	1,2-Dichloroethane	N.D.	1.	ug/l
6305	2-Butanone	N.D.	3.	ug/l
5398	1,1,1-Trichloroethane	N.D.	1.	ug/l
5399	Carbon Tetrachloride	N.D.	1.	ug/l
5406	Bromodichloromethane	N.D.	1.	ug/l
5421	1,1,2,2-Tetrachloroethane	N.D.	1.	ug/l
5404	1,2-Dichloropropane	N.D.	1.	ug/l
6306	trans-1,3-Dichloropropene	N.D.	1.	ug/l
5403	Trichloroethene	91.	1.	ug/l
5411	Dibromochloromethane	N.D.	1.	ug/l
5408	1,1,2-Trichloroethane	N.D.	1.	ug/l
5401	Benzene	N.D.	1.	ug/l
6307	cis-1,3-Dichloropropene	N.D.	1.	ug/l
5419	Bromoform	N.D.	1.	ug/l
6308	4-Methyl-2-pentanone	N.D.	3.	ug/l
6309	2-Hexanone	N.D.	3.	ug/l
5409	Tetrachloroethene	N.D.	1.	ug/l
5407	Toluene	N.D.	1.	ug/l
5413	Chlorobenzene	N.D.	1.	ug/l
5415	Ethylbenzene	N.D.	1.	ug/l
5418	Styrene	N.D.	1.	ug/l
6310	Xylene (Total)	N.D.	1.	ug/l
5392	trans-1,2-Dichloroethene	23.	1.	ug/l
5395	cis-1,2-Dichloroethene	420.	5.	ug/l

==========

Sample Number: WW3707949 Account: 10160 DAIMLERCHRYSLER CORPORATION
Date Submitted: 10/16/01 Date Reported: NOT REP
Date Collected: 10/15/01

MWA003 Grab Groundwater Sample
Site Code: SC001 RFA# YGQP2001240
Dayton Thermal/Dayton, OH

	ANALYSIS NAME	RESULT	METHOD DETECTION LIMIT	UNITS
6291	TCL by 8260 (water)			

A site-specific MSD sample was not submitted for the project. A LCS/LCSD was performed to demonstrate precision and accuracy at a batch level.

==========

5385	Chloromethane	N.D.	2.	ug/l
5387	Bromomethane	N.D.	2.	ug/l
5386	Vinyl Chloride	7.	1.	ug/l
5388	Chloroethane	N.D.	2.	ug/l

5391	Methylene Chloride	N.D.	2.	ug/l

***** Lancaster Laboratories Analytical Report *****
2425 New Holland Pike, Lancaster, PA 17601

Sample Number: WW3707949 Account: 10160 DAIMLERCHRYSLER CORPORATION

6302	Acetone	N.D.	6.	ug/l
6303	Carbon Disulfide	N.D.	1.	ug/l
5390	1,1-Dichloroethene	17.	1.	ug/l
5393	1,1-Dichloroethane	59.	1.	ug/l
5396	Chloroform	N.D.	1.	ug/l
5402	1,2-Dichloroethane	N.D.	1.	ug/l
6305	2-Butanone	N.D.	3.	ug/l
5398	1,1,1-Trichloroethane	280.	2.	ug/l
5399	Carbon Tetrachloride	N.D.	1.	ug/l
5406	Bromodichloromethane	N.D.	1.	ug/l
5421	1,1,2,2-Tetrachloroethane	N.D.	1.	ug/l
5404	1,2-Dichloropropane	N.D.	1.	ug/l
6306	trans-1,3-Dichloropropene	N.D.	1.	ug/l
5403	Trichloroethene	110.	1.	ug/l
5411	Dibromochloromethane	N.D.	1.	ug/l
5408	1,1,2-Trichloroethane	N.D.	1.	ug/l
5401	Benzene	N.D.	1.	ug/l
6307	cis-1,3-Dichloropropene	N.D.	1.	ug/l
5419	Bromoform	N.D.	1.	ug/l
6308	4-Methyl-2-pentanone	N.D.	3.	ug/l
6309	2-Hexanone	N.D.	3.	ug/l
5409	Tetrachloroethene	130.	1.	ug/l
5407	Toluene	N.D.	1.	ug/l
5413	Chlorobenzene	N.D.	1.	ug/l
5415	Ethylbenzene	N.D.	1.	ug/l
5418	Styrene	N.D.	1.	ug/l
6310	Xylene (Total)	N.D.	1.	ug/l
5392	trans-1,2-Dichloroethene	6.	1.	ug/l
5395	cis-1,2-Dichloroethene	140.	1.	ug/l

==========

Sample Number: WW3707950 Account: 10160 DAIMLERCHRYSLER CORPORATION
Date Submitted: 10/16/01 Date Reported: NOT REP
Date Collected: 10/15/01

PZ014I Grab Groundwater Sample
Site Code: SC001 RFA# YGQP2001240
Dayton Thermal/Dayton, OH

	ANALYSIS NAME	RESULT	METHOD DETECTION LIMIT	UNITS
6291	TCL by 8260 (water)			

A site-specific MSD sample was not submitted for the project. A LCS/LCSD was performed to demonstrate precision and accuracy at a batch level.

==========

***** Lancaster Laboratories Analytical Report *****
2425 New Holland Pike, Lancaster, PA 17601

Sample Number: WW3707950 Account: 10160 DAIMLERCHRYSLER CORPORATION

5385	Chloromethane	N.D.		2.	ug/l
5387	Bromomethane	N.D.		2.	ug/l
5386	Vinyl Chloride	1.	J	1.	ug/l
5388	Chloroethane	N.D.		2.	ug/l
5391	Methylene Chloride	N.D.		2.	ug/l
6302	Acetone	N.D.		6.	ug/l
6303	Carbon Disulfide	N.D.		1.	ug/l
5390	1,1-Dichloroethene	6.		1.	ug/l
5393	1,1-Dichloroethane	19.		1.	ug/l
5396	Chloroform	N.D.		1.	ug/l
5402	1,2-Dichloroethane	N.D.		1.	ug/l
6305	2-Butanone	4.	J	3.	ug/l
5398	1,1,1-Trichloroethane	6.		1.	ug/l
5399	Carbon Tetrachloride	N.D.		1.	ug/l
5406	Bromodichloromethane	N.D.		1.	ug/l
5421	1,1,2,2-Tetrachloroethane	N.D.		1.	ug/l
5404	1,2-Dichloropropane	N.D.		1.	ug/l
6306	trans-1,3-Dichloropropene	N.D.		1.	ug/l
5403	Trichloroethene	290.		2.	ug/l
5411	Dibromochloromethane	N.D.		1.	ug/l
5408	1,1,2-Trichloroethane	N.D.		1.	ug/l
5401	Benzene	N.D.		1.	ug/l
6307	cis-1,3-Dichloropropene	N.D.		1.	ug/l
5419	Bromoform	N.D.		1.	ug/l
6308	4-Methyl-2-pentanone	N.D.		3.	ug/l
6309	2-Hexanone	N.D.		3.	ug/l
5409	Tetrachloroethene	12.		1.	ug/l
5407	Toluene	N.D.		1.	ug/l
5413	Chlorobenzene	N.D.		1.	ug/l
5415	Ethylbenzene	N.D.		1.	ug/l
5418	Styrene	N.D.		1.	ug/l
6310	Xylene (Total)	N.D.		1.	ug/l
5392	trans-1,2-Dichloroethene	9.		1.	ug/l
5395	cis-1,2-Dichloroethene	83.		1.	ug/l

==========

***** Lancaster Laboratories Analytical Report *****
2425 New Holland Pike, Lancaster, PA 17601

Sample Number: WW3707951 Account: 10160 DAIMLERCHRYSLER CORPORATION
Date Submitted: 10/16/01 Date Reported: NOT REP
Date Collected: 10/15/01

PZ016D Grab Groundwater Sample
Site Code: SC001 RFA# YGQP2001240
Dayton Thermal/Dayton, OH

	ANALYSIS NAME	RESULT		METHOD DETECTION LIMIT	UNITS
6291	TCL by 8260 (water)				

A site-specific MSD sample was not submitted for the project. A LCS/LCSD was performed to demonstrate precision and accuracy at a batch level.
==========

5385	Chloromethane	N.D.		2.	ug/l
5387	Bromomethane	N.D.		2.	ug/l
5386	Vinyl Chloride	13.		1.	ug/l
5388	Chloroethane	N.D.		2.	ug/l
5391	Methylene Chloride	N.D.		2.	ug/l
6302	Acetone	N.D.		6.	ug/l
6303	Carbon Disulfide	N.D.		1.	ug/l
5390	1,1-Dichloroethene	N.D.		1.	ug/l
5393	1,1-Dichloroethane	1.	J	1.	ug/l
5396	Chloroform	N.D.		1.	ug/l
5402	1,2-Dichloroethane	N.D.		1.	ug/l
6305	2-Butanone	N.D.		3.	ug/l
5398	1,1,1-Trichloroethane	9.		1.	ug/l
5399	Carbon Tetrachloride	N.D.		1.	ug/l
5406	Bromodichloromethane	N.D.		1.	ug/l
5421	1,1,2,2-Tetrachloroethane	N.D.		1.	ug/l
5404	1,2-Dichloropropane	N.D.		1.	ug/l
6306	trans-1,3-Dichloropropene	N.D.		1.	ug/l
5403	Trichloroethene	12.		1.	ug/l
5411	Dibromochloromethane	N.D.		1.	ug/l
5408	1,1,2-Trichloroethane	N.D.		1.	ug/l
5401	Benzene	N.D.		1.	ug/l
6307	cis-1,3-Dichloropropene	N.D.		1.	ug/l
5419	Bromoform	N.D.		1.	ug/l
6308	4-Methyl-2-pentanone	N.D.		3.	ug/l
6309	2-Hexanone	N.D.		3.	ug/l
5409	Tetrachloroethene	170.		1.	ug/l
5407	Toluene	N.D.		1.	ug/l
5413	Chlorobenzene	N.D.		1.	ug/l

5415	Ethylbenzene	N.D.	1.	ug/l

***** Lancaster Laboratories Analytical Report *****
2425 New Holland Pike, Lancaster, PA 17601

Sample Number: WW3707951 Account: 10160 DAIMLERCHRYSLER CORPORATION

5418	Styrene	N.D.		1.	ug/l
6310	Xylene (Total)	N.D.		1.	ug/l
5392	trans-1,2-Dichloroethene	N.D.		1.	ug/l
5395	cis-1,2-Dichloroethene	4.	J	1.	ug/l

==========

Sample Number: WW3707952 Account: 10160 DAIMLERCHRYSLER CORPORATION
Date Submitted: 10/16/01 Date Reported: NOT REP
Date Collected: 10/15/01

AS Grab Groundwater Sample
Site Code: SC001 RFA# YGQP2001240
Dayton Thermal/Dayton, OH

	ANALYSIS NAME	RESULT		METHOD DETECTION LIMIT	UNITS
6291	TCL by 8260 (water)				

A site-specific MSD sample was not submitted for the project. A LCS/LCSD was performed to demonstrate precision and accuracy at a batch level.

==========

5385	Chloromethane	N.D.		2.	ug/l
5387	Bromomethane	N.D.		2.	ug/l
5386	Vinyl Chloride	6.		1.	ug/l
5388	Chloroethane	N.D.		2.	ug/l
5391	Methylene Chloride	N.D.		2.	ug/l
6302	Acetone	N.D.		6.	ug/l
6303	Carbon Disulfide	N.D.		1.	ug/l
5390	1,1-Dichloroethene	N.D.		1.	ug/l
5393	1,1-Dichloroethane	6.		1.	ug/l
5396	Chloroform	N.D.		1.	ug/l
5402	1,2-Dichloroethane	N.D.		1.	ug/l
6305	2-Butanone	N.D.		3.	ug/l
5398	1,1,1-Trichloroethane	3.	J	1.	ug/l
5399	Carbon Tetrachloride	N.D.		1.	ug/l
5406	Bromodichloromethane	N.D.		1.	ug/l
5421	1,1,2,2-Tetrachloroethane	N.D.		1.	ug/l
5404	1,2-Dichloropropane	N.D.		1.	ug/l
6306	trans-1,3-Dichloropropene	N.D.		1.	ug/l
5403	Trichloroethene	120.		1.	ug/l
5411	Dibromochloromethane	N.D.		1.	ug/l
5408	1,1,2-Trichloroethane	N.D.		1.	ug/l
5401	Benzene	N.D.		1.	ug/l
6307	cis-1,3-Dichloropropene	N.D.		1.	ug/l
5419	Bromoform	N.D.		1.	ug/l

6308	4-Methyl-2-pentanone	N.D.		3.	ug/l

***** Lancaster Laboratories Analytical Report *****
2425 New Holland Pike, Lancaster, PA 17601

Sample Number: WW3707952 Account: 10160 DAIMLERCHRYSLER CORPORATION

6309	2-Hexanone	N.D.		3.	ug/l
5409	Tetrachloroethene	2.	J	1.	ug/l
5407	Toluene	N.D.		1.	ug/l
5413	Chlorobenzene	N.D.		1.	ug/l
5415	Ethylbenzene	N.D.		1.	ug/l
5418	Styrene	N.D.		1.	ug/l
6310	Xylene (Total)	N.D.		1.	ug/l
5392	trans-1,2-Dichloroethene	3.	J	1.	ug/l
5395	cis-1,2-Dichloroethene	45.		1.	ug/l

==========

Sample Number: WW3707953 Account: 10160 DAIMLERCHRYSLER CORPORATION
Date Submitted: 10/16/01 Date Reported: NOT REP
Date Collected: 10/15/01

MWC003 Grab Groundwater Sample
Site Code: SC001 RFA# YGQP2001240
Dayton Thermal/Dayton, OH

	ANALYSIS NAME	RESULT		METHOD DETECTION LIMIT	UNITS
6291	TCL by 8260 (water)				

A site-specific MSD sample was not submitted for the project. A LCS/LCSD was performed to demonstrate precision and accuracy at a batch level.

==========

5385	Chloromethane	N.D.		2.	ug/l
5387	Bromomethane	N.D.		2.	ug/l
5386	Vinyl Chloride	N.D.		1.	ug/l
5388	Chloroethane	N.D.		2.	ug/l
5391	Methylene Chloride	N.D.		2.	ug/l
6302	Acetone	N.D.		6.	ug/l
6303	Carbon Disulfide	N.D.		1.	ug/l
5390	1,1-Dichloroethene	N.D.		1.	ug/l
5393	1,1-Dichloroethane	N.D.		1.	ug/l
5396	Chloroform	N.D.		1.	ug/l
5402	1,2-Dichloroethane	N.D.		1.	ug/l
6305	2-Butanone	N.D.		3.	ug/l
5398	1,1,1-Trichloroethane	N.D.		1.	ug/l
5399	Carbon Tetrachloride	N.D.		1.	ug/l
5406	Bromodichloromethane	N.D.		1.	ug/l
5421	1,1,2,2-Tetrachloroethane	N.D.		1.	ug/l
5404	1,2-Dichloropropane	N.D.		1.	ug/l
6306	trans-1,3-Dichloropropene	N.D.		1.	ug/l
5403	Trichloroethene	1.	J	1.	ug/l

5411	Dibromochloromethane	N.D.	1.	ug/l

***** Lancaster Laboratories Analytical Report *****
2425 New Holland Pike, Lancaster, PA 17601

Sample Number: WW3707953 Account: 10160 DAIMLERCHRYSLER CORPORATION

5408	1,1,2-Trichloroethane	N.D.	1.	ug/l
5401	Benzene	N.D.	1.	ug/l
6307	cis-1,3-Dichloropropene	N.D.	1.	ug/l
5419	Bromoform	N.D.	1.	ug/l
6308	4-Methyl-2-pentanone	N.D.	3.	ug/l
6309	2-Hexanone	N.D.	3.	ug/l
5409	Tetrachloroethene	N.D.	1.	ug/l
5407	Toluene	N.D.	1.	ug/l
5413	Chlorobenzene	N.D.	1.	ug/l
5415	Ethylbenzene	N.D.	1.	ug/l
5418	Styrene	N.D.	1.	ug/l
6310	Xylene (Total)	N.D.	1.	ug/l
5392	trans-1,2-Dichloroethene	N.D.	1.	ug/l
5395	cis-1,2-Dichloroethene	N.D.	1.	ug/l

==========

Sample Number: WW3707954 Account: 10160 DAIMLERCHRYSLER CORPORATION
Date Submitted: 10/16/01 Date Reported: NOT REP
Date Collected: 10/15/01

MWC003-DUP Grab Groundwater Sample
Site Code: SC001 RFA# YGQP2001240
Dayton Thermal/Dayton, OH

	ANALYSIS NAME	RESULT	METHOD DETECTION LIMIT	UNITS
6291	TCL by 8260 (water)			

A site-specific MSD sample was not submitted for the project. A LCS/LCSD was performed to demonstrate precision and accuracy at a batch level.

==========

5385	Chloromethane	N.D.	2.	ug/l
5387	Bromomethane	N.D.	2.	ug/l
5386	Vinyl Chloride	N.D.	1.	ug/l
5388	Chloroethane	N.D.	2.	ug/l
5391	Methylene Chloride	N.D.	2.	ug/l
6302	Acetone	N.D.	6.	ug/l
6303	Carbon Disulfide	N.D.	1.	ug/l
5390	1,1-Dichloroethene	N.D.	1.	ug/l
5393	1,1-Dichloroethane	N.D.	1.	ug/l
5396	Chloroform	N.D.	1.	ug/l
5402	1,2-Dichloroethane	N.D.	1.	ug/l
6305	2-Butanone	N.D.	3.	ug/l
5398	1,1,1-Trichloroethane	N.D.	1.	ug/l
5399	Carbon Tetrachloride	N.D.	1.	ug/l

5406	Bromodichloromethane	N.D.	1.	ug/l

***** Lancaster Laboratories Analytical Report *****
2425 New Holland Pike, Lancaster, PA 17601

Sample Number: WW3707954 Account: 10160 DAIMLERCHRYSLER CORPORATION

5421	1,1,2,2-Tetrachloroethane	N.D.	1.	ug/l
5404	1,2-Dichloropropane	N.D.	1.	ug/l
6306	trans-1,3-Dichloropropene	N.D.	1.	ug/l
5403	Trichloroethene	N.D.	1.	ug/l
5411	Dibromochloromethane	N.D.	1.	ug/l
5408	1,1,2-Trichloroethane	N.D.	1.	ug/l
5401	Benzene	N.D.	1.	ug/l
6307	cis-1,3-Dichloropropene	N.D.	1.	ug/l
5419	Bromoform	N.D.	1.	ug/l
6308	4-Methyl-2-pentanone	N.D.	3.	ug/l
6309	2-Hexanone	N.D.	3.	ug/l
5409	Tetrachloroethene	N.D.	1.	ug/l
5407	Toluene	N.D.	1.	ug/l
5413	Chlorobenzene	N.D.	1.	ug/l
5415	Ethylbenzene	N.D.	1.	ug/l
5418	Styrene	N.D.	1.	ug/l
6310	Xylene (Total)	N.D.	1.	ug/l
5392	trans-1,2-Dichloroethene	N.D.	1.	ug/l
5395	cis-1,2-Dichloroethene	N.D.	1.	ug/l

==========

Sample Number: WW3707955 Account: 10160 DAIMLERCHRYSLER CORPORATION
Date Submitted: 10/16/01 Date Reported: NOT REP
Date Collected: 10/15/01

PZ008D Grab Groundwater Sample
Site Code: SC001 RFA# YGQP2001240
Dayton Thermal/Dayton, OH

	ANALYSIS NAME	RESULT		METHOD DETECTION LIMIT	UNITS
6291	TCL by 8260 (water)				

A site-specific MSD sample was not submitted for the project. A LCS/LCSD was performed to demonstrate precision and accuracy at a batch level.

==========

5385	Chloromethane	N.D.		2.	ug/l
5387	Bromomethane	N.D.		2.	ug/l
5386	Vinyl Chloride	N.D.		1.	ug/l
5388	Chloroethane	N.D.		2.	ug/l
5391	Methylene Chloride	N.D.		2.	ug/l
6302	Acetone	7.	J	6.	ug/l
6303	Carbon Disulfide	N.D.		1.	ug/l
5390	1,1-Dichloroethene	N.D.		1.	ug/l
5393	1,1-Dichloroethane	N.D.		1.	ug/l

5396	Chloroform	N.D.		1.	ug/l

***** Lancaster Laboratories Analytical Report *****
2425 New Holland Pike, Lancaster, PA 17601

Sample Number: WW3707955 Account: 10160 DAIMLERCHRYSLER CORPORATION

5402	1,2-Dichloroethane	N.D.		1.	ug/l
6305	2-Butanone	N.D.		3.	ug/l
5398	1,1,1-Trichloroethane	N.D.		1.	ug/l
5399	Carbon Tetrachloride	N.D.		1.	ug/l
5406	Bromodichloromethane	N.D.		1.	ug/l
5421	1,1,2,2-Tetrachloroethane	N.D.		1.	ug/l
5404	1,2-Dichloropropane	N.D.		1.	ug/l
6306	trans-1,3-Dichloropropene	N.D.		1.	ug/l
5403	Trichloroethene	4.	J	1.	ug/l
5411	Dibromochloromethane	N.D.		1.	ug/l
5408	1,1,2-Trichloroethane	N.D.		1.	ug/l
5401	Benzene	N.D.		1.	ug/l
6307	cis-1,3-Dichloropropene	N.D.		1.	ug/l
5419	Bromoform	N.D.		1.	ug/l
6308	4-Methyl-2-pentanone	N.D.		3.	ug/l
6309	2-Hexanone	N.D.		3.	ug/l
5409	Tetrachloroethene	1.	J	1.	ug/l
5407	Toluene	N.D.		1.	ug/l
5413	Chlorobenzene	N.D.		1.	ug/l
5415	Ethylbenzene	N.D.		1.	ug/l
5418	Styrene	N.D.		1.	ug/l
6310	Xylene (Total)	N.D.		1.	ug/l
5392	trans-1,2-Dichloroethene	N.D.		1.	ug/l
5395	cis-1,2-Dichloroethene	4.	J	1.	ug/l

==========

Sample Number: WW3707956 Account: 10160 DAIMLERCHRYSLER CORPORATION
Date Submitted: 10/16/01 Date Reported: NOT REP
Date Collected: 10/15/01

MW015S Grab Groundwater Sample
Site Code: SC001 RFA# YGQP2001240
Dayton Thermal/Dayton, OH

	ANALYSIS NAME	RESULT	METHOD DETECTION LIMIT	UNITS
6291	TCL by 8260 (water)			

A site-specific MSD sample was not submitted for the project. A LCS/LCSD was performed to demonstrate precision and accuracy at a batch level.

==========

5385	Chloromethane	N.D.		2.	ug/l
5387	Bromomethane	N.D.		2.	ug/l
5386	Vinyl Chloride	N.D.		1.	ug/l
5388	Chloroethane	N.D.		2.	ug/l

5391	Methylene Chloride	N.D.	2.	ug/l

***** Lancaster Laboratories Analytical Report *****
2425 New Holland Pike, Lancaster, PA 17601

Sample Number: WW3707956 Account: 10160 DAIMLERCHRYSLER CORPORATION

6302	Acetone	N.D.		6.	ug/l
6303	Carbon Disulfide	N.D.		1.	ug/l
5390	1,1-Dichloroethene	N.D.		1.	ug/l
5393	1,1-Dichloroethane	N.D.		1.	ug/l
5396	Chloroform	N.D.		1.	ug/l
5402	1,2-Dichloroethane	N.D.		1.	ug/l
6305	2-Butanone	N.D.		3.	ug/l
5398	1,1,1-Trichloroethane	2.	J	1.	ug/l
5399	Carbon Tetrachloride	N.D.		1.	ug/l
5406	Bromodichloromethane	N.D.		1.	ug/l
5421	1,1,2,2-Tetrachloroethane	N.D.		1.	ug/l
5404	1,2-Dichloropropane	N.D.		1.	ug/l
6306	trans-1,3-Dichloropropene	N.D.		1.	ug/l
5403	Trichloroethene	N.D.		1.	ug/l
5411	Dibromochloromethane	N.D.		1.	ug/l
5408	1,1,2-Trichloroethane	N.D.		1.	ug/l
5401	Benzene	N.D.		1.	ug/l
6307	cis-1,3-Dichloropropene	N.D.		1.	ug/l
5419	Bromoform	N.D.		1.	ug/l
6308	4-Methyl-2-pentanone	N.D.		3.	ug/l
6309	2-Hexanone	N.D.		3.	ug/l
5409	Tetrachloroethene	120.		1.	ug/l
5407	Toluene	N.D.		1.	ug/l
5413	Chlorobenzene	N.D.		1.	ug/l
5415	Ethylbenzene	N.D.		1.	ug/l
5418	Styrene	N.D.		1.	ug/l
6310	Xylene (Total)	N.D.		1.	ug/l
5392	trans-1,2-Dichloroethene	N.D.		1.	ug/l
5395	cis-1,2-Dichloroethene	N.D.		1.	ug/l

==========

Sample Number: WW3707957 Account: 10160 DAIMLERCHRYSLER CORPORATION
Date Submitted: 10/16/01 Date Reported: NOT REP
Date Collected: 10/15/01

PZ015I Grab Groundwater Sample
Site Code: SC001 RFA# YGQP2001240
Dayton Thermal/Dayton, OH

	ANALYSIS NAME	RESULT	METHOD DETECTION LIMIT	UNITS
6291	TCL by 8260 (water)			

A site-specific MSD sample was not submitted for the project. A LCS/LCSD was performed to demonstrate precision and accuracy at a batch level.

==========

***** Lancaster Laboratories Analytical Report *****
2425 New Holland Pike, Lancaster, PA 17601

Sample Number: WW3707957 Account: 10160 DAIMLERCHRYSLER CORPORATION

5385	Chloromethane	N.D.		2.	ug/l
5387	Bromomethane	N.D.		2.	ug/l
5386	Vinyl Chloride	N.D.		1.	ug/l
5388	Chloroethane	N.D.		2.	ug/l
5391	Methylene Chloride	N.D.		2.	ug/l
6302	Acetone	N.D.		6.	ug/l
6303	Carbon Disulfide	N.D.		1.	ug/l
5390	1,1-Dichloroethene	3.	J	1.	ug/l
5393	1,1-Dichloroethane	12.		1.	ug/l
5396	Chloroform	N.D.		1.	ug/l
5402	1,2-Dichloroethane	6.		1.	ug/l
6305	2-Butanone	N.D.		3.	ug/l
5398	1,1,1-Trichloroethane	18.		1.	ug/l
5399	Carbon Tetrachloride	N.D.		1.	ug/l
5406	Bromodichloromethane	N.D.		1.	ug/l
5421	1,1,2,2-Tetrachloroethane	N.D.		1.	ug/l
5404	1,2-Dichloropropane	N.D.		1.	ug/l
6306	trans-1,3-Dichloropropene	N.D.		1.	ug/l
5403	Trichloroethene	2.	J	1.	ug/l
5411	Dibromochloromethane	N.D.		1.	ug/l
5408	1,1,2-Trichloroethane	N.D.		1.	ug/l
5401	Benzene	N.D.		1.	ug/l
6307	cis-1,3-Dichloropropene	N.D.		1.	ug/l
5419	Bromoform	N.D.		1.	ug/l
6308	4-Methyl-2-pentanone	N.D.		3.	ug/l
6309	2-Hexanone	N.D.		3.	ug/l
5409	Tetrachloroethene	67.		1.	ug/l
5407	Toluene	N.D.		1.	ug/l
5413	Chlorobenzene	N.D.		1.	ug/l
5415	Ethylbenzene	N.D.		1.	ug/l
5418	Styrene	N.D.		1.	ug/l
6310	Xylene (Total)	N.D.		1.	ug/l
5392	trans-1,2-Dichloroethene	N.D.		1.	ug/l
5395	cis-1,2-Dichloroethene	5.	J	1.	ug/l

==========

***** Lancaster Laboratories Analytical Report *****
2425 New Holland Pike, Lancaster, PA 17601

Sample Number: WW3707958 Account: 10160 DAIMLERCHRYSLER CORPORATION
Date Submitted: 10/16/01 Date Reported: NOT REP
Date Collected: 10/15/01

PZ015I-DUP Grab Groundwater Sample
Site Code: SC001 RFA# YGQP2001240
Dayton Thermal/Dayton, OH

	ANALYSIS NAME	RESULT		METHOD DETECTION LIMIT	UNITS
6291	TCL by 8260 (water)				

A site-specific MSD sample was not submitted for the project. A LCS/LCSD was performed to demonstrate precision and accuracy at a batch level.
==========

5385	Chloromethane	N.D.		2.	ug/l
5387	Bromomethane	N.D.		2.	ug/l
5386	Vinyl Chloride	N.D.		1.	ug/l
5388	Chloroethane	N.D.		2.	ug/l
5391	Methylene Chloride	N.D.		2.	ug/l
6302	Acetone	N.D.		6.	ug/l
6303	Carbon Disulfide	N.D.		1.	ug/l
5390	1,1-Dichloroethene	3.	J	1.	ug/l
5393	1,1-Dichloroethane	12.		1.	ug/l
5396	Chloroform	N.D.		1.	ug/l
5402	1,2-Dichloroethane	6.		1.	ug/l
6305	2-Butanone	N.D.		3.	ug/l
5398	1,1,1-Trichloroethane	18.		1.	ug/l
5399	Carbon Tetrachloride	N.D.		1.	ug/l
5406	Bromodichloromethane	N.D.		1.	ug/l
5421	1,1,2,2-Tetrachloroethane	N.D.		1.	ug/l
5404	1,2-Dichloropropane	N.D.		1.	ug/l
6306	trans-1,3-Dichloropropene	N.D.		1.	ug/l
5403	Trichloroethene	2.	J	1.	ug/l
5411	Dibromochloromethane	N.D.		1.	ug/l
5408	1,1,2-Trichloroethane	N.D.		1.	ug/l
5401	Benzene	N.D.		1.	ug/l
6307	cis-1,3-Dichloropropene	N.D.		1.	ug/l
5419	Bromoform	N.D.		1.	ug/l
6308	4-Methyl-2-pentanone	N.D.		3.	ug/l
6309	2-Hexanone	N.D.		3.	ug/l
5409	Tetrachloroethene	67.		1.	ug/l
5407	Toluene	N.D.		1.	ug/l
5413	Chlorobenzene	N.D.		1.	ug/l

5415	Ethylbenzene	N.D.		1.	ug/l

***** Lancaster Laboratories Analytical Report *****
2425 New Holland Pike, Lancaster, PA 17601

Sample Number: WW3707958 Account: 10160 DAIMLERCHRYSLER CORPORATION

5418	Styrene	N.D.		1.	ug/l
6310	Xylene (Total)	N.D.		1.	ug/l
5392	trans-1,2-Dichloroethene	N.D.		1.	ug/l
5395	cis-1,2-Dichloroethene	5.	J	1.	ug/l
2010	Methyl t-butyl ether	N.D.		1.	ug/l

==========

Sample Number: WW3707959 Account: 10160 DAIMLERCHRYSLER CORPORATION
Date Submitted: 10/16/01 Date Reported: NOT REP
Date Collected: 10/15/01

PZ007I Grab Groundwater Sample
Site Code: SC001 RFA# YGQP2001240
Dayton Thermal/Dayton, OH

	ANALYSIS NAME	RESULT		METHOD DETECTION LIMIT	UNITS
6291	TCL by 8260 (water)				

A site-specific MSD sample was not submitted for the project. A LCS/LCSD was performed to demonstrate precision and accuracy at a batch level.

==========

5385	Chloromethane	N.D.		2.	ug/l
5387	Bromomethane	N.D.		2.	ug/l
5386	Vinyl Chloride	N.D.		1.	ug/l
5388	Chloroethane	N.D.		2.	ug/l
5391	Methylene Chloride	N.D.		2.	ug/l
6302	Acetone	N.D.		6.	ug/l
6303	Carbon Disulfide	N.D.		1.	ug/l
5390	1,1-Dichloroethene	N.D.		1.	ug/l
5393	1,1-Dichloroethane	N.D.		1.	ug/l
5396	Chloroform	N.D.		1.	ug/l
5402	1,2-Dichloroethane	N.D.		1.	ug/l
6305	2-Butanone	N.D.		3.	ug/l
5398	1,1,1-Trichloroethane	N.D.		1.	ug/l
5399	Carbon Tetrachloride	N.D.		1.	ug/l
5406	Bromodichloromethane	N.D.		1.	ug/l
5421	1,1,2,2-Tetrachloroethane	N.D.		1.	ug/l
5404	1,2-Dichloropropane	N.D.		1.	ug/l
6306	trans-1,3-Dichloropropene	N.D.		1.	ug/l
5403	Trichloroethene	2.	J	1.	ug/l
5411	Dibromochloromethane	N.D.		1.	ug/l
5408	1,1,2-Trichloroethane	N.D.		1.	ug/l
5401	Benzene	N.D.		1.	ug/l
6307	cis-1,3-Dichloropropene	N.D.		1.	ug/l

5419	Bromoform	N.D.	1.	ug/l

***** Lancaster Laboratories Analytical Report *****
2425 New Holland Pike, Lancaster, PA 17601

Sample Number: WW3707959 Account: 10160 DAIMLERCHRYSLER CORPORATION

6308	4-Methyl-2-pentanone	N.D.	3.	ug/l
6309	2-Hexanone	N.D.	3.	ug/l
5409	Tetrachloroethene	N.D.	1.	ug/l
5407	Toluene	N.D.	1.	ug/l
5413	Chlorobenzene	N.D.	1.	ug/l
5415	Ethylbenzene	N.D.	1.	ug/l
5418	Styrene	N.D.	1.	ug/l
6310	Xylene (Total)	N.D.	1.	ug/l
5392	trans-1,2-Dichloroethene	N.D.	1.	ug/l
5395	cis-1,2-Dichloroethene	8.	1.	ug/l

==========

Sample Number: WW3707960 Account: 10160 DAIMLERCHRYSLER CORPORATION
Date Submitted: 10/16/01 Date Reported: NOT REP
Date Collected: 10/15/01

MW007S Grab Groundwater Sample
Site Code: SC001 RFA# YGQP2001240
Dayton Thermal/Dayton, OH

	ANALYSIS NAME	RESULT	METHOD DETECTION LIMIT	UNITS
6291	TCL by 8260 (water)			

A site-specific MSD sample was not submitted for the project. A LCS/LCSD was performed to demonstrate precision and accuracy at a batch level.

==========

5385	Chloromethane	N.D.	2.	ug/l
5387	Bromomethane	N.D.	2.	ug/l
5386	Vinyl Chloride	N.D.	1.	ug/l
5388	Chloroethane	N.D.	2.	ug/l
5391	Methylene Chloride	N.D.	2.	ug/l
6302	Acetone	N.D.	6.	ug/l
6303	Carbon Disulfide	N.D.	1.	ug/l
5390	1,1-Dichloroethene	N.D.	1.	ug/l
5393	1,1-Dichloroethane	N.D.	1.	ug/l
5396	Chloroform	N.D.	1.	ug/l
5402	1,2-Dichloroethane	N.D.	1.	ug/l
6305	2-Butanone	N.D.	3.	ug/l
5398	1,1,1-Trichloroethane	2. J	1.	ug/l
5399	Carbon Tetrachloride	N.D.	1.	ug/l
5406	Bromodichloromethane	N.D.	1.	ug/l
5421	1,1,2,2-Tetrachloroethane	N.D.	1.	ug/l
5404	1,2-Dichloropropane	N.D.	1.	ug/l
6306	trans-1,3-Dichloropropene	N.D.	1.	ug/l

5403	Trichloroethene	67.	1.	ug/l

***** Lancaster Laboratories Analytical Report *****
2425 New Holland Pike, Lancaster, PA 17601

Sample Number: WW3707960 Account: 10160 DAIMLERCHRYSLER CORPORATION

5411	Dibromochloromethane	N.D.		1.	ug/l
5408	1,1,2-Trichloroethane	N.D.		1.	ug/l
5401	Benzene	N.D.		1.	ug/l
6307	cis-1,3-Dichloropropene	N.D.		1.	ug/l
5419	Bromoform	N.D.		1.	ug/l
6308	4-Methyl-2-pentanone	N.D.		3.	ug/l
6309	2-Hexanone	N.D.		3.	ug/l
5409	Tetrachloroethene	N.D.		1.	ug/l
5407	Toluene	N.D.		1.	ug/l
5413	Chlorobenzene	N.D.		1.	ug/l
5415	Ethylbenzene	N.D.		1.	ug/l
5418	Styrene	N.D.		1.	ug/l
6310	Xylene (Total)	N.D.		1.	ug/l
5392	trans-1,2-Dichloroethene	N.D.		1.	ug/l
5395	cis-1,2-Dichloroethene	4.	J	1.	ug/l

==========

Sample Number: WW3707961 Account: 10160 DAIMLERCHRYSLER CORPORATION
Date Submitted: 10/16/01 Date Reported: NOT REP
Date Collected: 10/15/01

Field_Blank_2 Grab Water Sample
Site Code: SC001 RFA# YGQP2001240
Dayton Thermal/Dayton, OH

	ANALYSIS NAME	RESULT	METHOD DETECTION LIMIT	UNITS
6291	TCL by 8260 (water)			

A site-specific MSD sample was not submitted for the project. A LCS/LCSD was performed to demonstrate precision and accuracy at a batch level.

==========

5385	Chloromethane	N.D.	2.	ug/l
5387	Bromomethane	N.D.	2.	ug/l
5386	Vinyl Chloride	N.D.	1.	ug/l
5388	Chloroethane	N.D.	2.	ug/l
5391	Methylene Chloride	N.D.	2.	ug/l
6302	Acetone	N.D.	6.	ug/l
6303	Carbon Disulfide	N.D.	1.	ug/l
5390	1,1-Dichloroethene	N.D.	1.	ug/l
5393	1,1-Dichloroethane	N.D.	1.	ug/l
5396	Chloroform	N.D.	1.	ug/l
5402	1,2-Dichloroethane	N.D.	1.	ug/l
6305	2-Butanone	N.D.	3.	ug/l
5398	1,1,1-Trichloroethane	N.D.	1.	ug/l

5399	Carbon Tetrachloride	N.D.	1.	ug/l

***** Lancaster Laboratories Analytical Report *****
2425 New Holland Pike, Lancaster, PA 17601

Sample Number: WW3707961 Account: 10160 DAIMLERCHRYSLER CORPORATION

5406	Bromodichloromethane	N.D.	1.	ug/l
5421	1,1,2,2-Tetrachloroethane	N.D.	1.	ug/l
5404	1,2-Dichloropropane	N.D.	1.	ug/l
6306	trans-1,3-Dichloropropene	N.D.	1.	ug/l
5403	Trichloroethene	N.D.	1.	ug/l
5411	Dibromochloromethane	N.D.	1.	ug/l
5408	1,1,2-Trichloroethane	N.D.	1.	ug/l
5401	Benzene	N.D.	1.	ug/l
6307	cis-1,3-Dichloropropene	N.D.	1.	ug/l
5419	Bromoform	N.D.	1.	ug/l
6308	4-Methyl-2-pentanone	N.D.	3.	ug/l
6309	2-Hexanone	N.D.	3.	ug/l
5409	Tetrachloroethene	N.D.	1.	ug/l
5407	Toluene	N.D.	1.	ug/l
5413	Chlorobenzene	N.D.	1.	ug/l
5415	Ethylbenzene	N.D.	1.	ug/l
5418	Styrene	N.D.	1.	ug/l
6310	Xylene (Total)	N.D.	1.	ug/l
5392	trans-1,2-Dichloroethene	N.D.	1.	ug/l
5395	cis-1,2-Dichloroethene	N.D.	1.	ug/l

==========

Sample Number: WW3707962 Account: 10160 DAIMLERCHRYSLER CORPORATION
Date Submitted: 10/16/01 Date Reported: NOT REP
Date Collected: 10/15/01

MWB005 Grab Groundwater Sample
Site Code: SC001 RFA# YGQP2001240
Dayton Thermal/Dayton, OH

	ANALYSIS NAME	RESULT	METHOD DETECTION LIMIT	UNITS
6291	TCL by 8260 (water)			

A site-specific MSD sample was not submitted for the project. A LCS/LCSD was performed to demonstrate precision and accuracy at a batch level.

==========

5385	Chloromethane	N.D.	2.	ug/l
5387	Bromomethane	N.D.	2.	ug/l
5386	Vinyl Chloride	N.D.	1.	ug/l
5388	Chloroethane	N.D.	2.	ug/l
5391	Methylene Chloride	N.D.	2.	ug/l
6302	Acetone	N.D.	6.	ug/l
6303	Carbon Disulfide	N.D.	1.	ug/l
5390	1,1-Dichloroethene	N.D.	1.	ug/l

5393	1,1-Dichloroethane	N.D.	1.	ug/l

***** Lancaster Laboratories Analytical Report *****
2425 New Holland Pike, Lancaster, PA 17601

Sample Number: WW3707962 Account: 10160 DAIMLERCHRYSLER CORPORATION

5396	Chloroform	N.D.	1.	ug/l
5402	1,2-Dichloroethane	N.D.	1.	ug/l
6305	2-Butanone	N.D.	3.	ug/l
5398	1,1,1-Trichloroethane	N.D.	1.	ug/l
5399	Carbon Tetrachloride	N.D.	1.	ug/l
5406	Bromodichloromethane	N.D.	1.	ug/l
5421	1,1,2,2-Tetrachloroethane	N.D.	1.	ug/l
5404	1,2-Dichloropropane	N.D.	1.	ug/l
6306	trans-1,3-Dichloropropene	N.D.	1.	ug/l
5403	Trichloroethene	N.D.	1.	ug/l
5411	Dibromochloromethane	N.D.	1.	ug/l
5408	1,1,2-Trichloroethane	N.D.	1.	ug/l
5401	Benzene	N.D.	1.	ug/l
6307	cis-1,3-Dichloropropene	N.D.	1.	ug/l
5419	Bromoform	N.D.	1.	ug/l
6308	4-Methyl-2-pentanone	N.D.	3.	ug/l
6309	2-Hexanone	N.D.	3.	ug/l
5409	Tetrachloroethene	N.D.	1.	ug/l
5407	Toluene	N.D.	1.	ug/l
5413	Chlorobenzene	N.D.	1.	ug/l
5415	Ethylbenzene	N.D.	1.	ug/l
5418	Styrene	N.D.	1.	ug/l
6310	Xylene (Total)	N.D.	1.	ug/l
5392	trans-1,2-Dichloroethene	N.D.	1.	ug/l
5395	cis-1,2-Dichloroethene	N.D.	1.	ug/l

==========

Sample Number: WW3707963 Account: 10160 DAIMLERCHRYSLER CORPORATION
Date Submitted: 10/16/01 Date Reported: NOT REP
Date Collected:

Trip_Blank Water Sample
Site Code: SC001 RFA# YGQP2001240
Dayton Thermal/Dayton, OH

	ANALYSIS NAME	RESULT	METHOD DETECTION LIMIT	UNITS
6291	TCL by 8260 (water)			

A site-specific MSD sample was not submitted for the project. A LCS/LCSD was performed to demonstrate precision and accuracy at a batch level.

==========

5385	Chloromethane	N.D.	2.	ug/l
5387	Bromomethane	N.D.	2.	ug/l
5386	Vinyl Chloride	N.D.	1.	ug/l

5388	Chloroethane	N.D.	2.	ug/l

***** Lancaster Laboratories Analytical Report *****
2425 New Holland Pike, Lancaster, PA 17601

Sample Number: WW3707963 Account: 10160 DAIMLERCHRYSLER CORPORATION

5391	Methylene Chloride	N.D.	2.	ug/l
6302	Acetone	N.D.	6.	ug/l
6303	Carbon Disulfide	N.D.	1.	ug/l
5390	1,1-Dichloroethene	N.D.	1.	ug/l
5393	1,1-Dichloroethane	N.D.	1.	ug/l
5396	Chloroform	N.D.	1.	ug/l
5402	1,2-Dichloroethane	N.D.	1.	ug/l
6305	2-Butanone	N.D.	3.	ug/l
5398	1,1,1-Trichloroethane	N.D.	1.	ug/l
5399	Carbon Tetrachloride	N.D.	1.	ug/l
5406	Bromodichloromethane	N.D.	1.	ug/l
5421	1,1,2,2-Tetrachloroethane	N.D.	1.	ug/l
5404	1,2-Dichloropropane	N.D.	1.	ug/l
6306	trans-1,3-Dichloropropene	N.D.	1.	ug/l
5403	Trichloroethene	N.D.	1.	ug/l
5411	Dibromochloromethane	N.D.	1.	ug/l
5408	1,1,2-Trichloroethane	N.D.	1.	ug/l
5401	Benzene	N.D.	1.	ug/l
6307	cis-1,3-Dichloropropene	N.D.	1.	ug/l
5419	Bromoform	N.D.	1.	ug/l
6308	4-Methyl-2-pentanone	N.D.	3.	ug/l
6309	2-Hexanone	N.D.	3.	ug/l
5409	Tetrachloroethene	N.D.	1.	ug/l
5407	Toluene	N.D.	1.	ug/l
5413	Chlorobenzene	N.D.	1.	ug/l
5415	Ethylbenzene	N.D.	1.	ug/l
5418	Styrene	N.D.	1.	ug/l
6310	Xylene (Total)	N.D.	1.	ug/l
5392	trans-1,2-Dichloroethene	N.D.	1.	ug/l
5395	cis-1,2-Dichloroethene	N.D.	1.	ug/l

==========