QSOURCE ENVIRONMENTAL SERVICES, INC.

SUBSURFACE EXPLORATION LOG

PROJECT Gem City Chemicals, Inc. PROJECT # I93004

PIT OR BORING # P-5

PAGE 2 OF 3

DEPTH	SAMPLE INFORMATION #	TYPE	FROM / TO	REC	BLOW CT ADV RATE	ELEV	MATERIAL / DRILLING AND OTHER NOTES
10							
	2	SS	9'-11'	0.9'	25		PEBBLES (to 2"), some fine to medium sand,
					20		trace silt, dry, 10 YR 7/4, PID = 0.05
12							
14							
					20		PEBBLES, and pebble fragments, little fine
	3	SS	14'-16'	0.8'	18		to medium sand, trace silt, dry,
					9		10 YR 7/4, PID = 0
16					19		
					16		SAND, coarse to very coarse, some pebbles
	4	SS	16'-18'	1.0'	16		(to 1") little fine to medium sand, trace
					13		silt, dry to moist, 10 YR 7/4, minor
18					18		oxidation spots, PID = 0
					15		SAND, medium to coarse, trace silt, trace
	5	SS	18'-20'	1.4'	13		pebbles, faint planar bedding, wet to
					16		saturated, PID = 0.4
20					20		
					11		SAND, medium to coarse, trace silt, faint
	6	SS	20'-22'	1.7'	19		planar bedding, 2.5 Y 6/4, saturated,
					17		PID = 0.5
22					26		
24							
					35		0.4' SAME AS ABOVE
	7	SS	24'-26'	1.6'	43		sharp contact
					37		1.2' PEBBLES and pebble fragments, little
26					26		f.-m. sand, few silt, PID = 0.25
28							
					20		SAND, coarse, little granules, few pebbles
30	8	SS	29'-31'	1.3'	18		(to 1/2") trace silt, 10 YR 6/3, PID = 0.5

NOTES:

2490 Technical Drive · Miamisburg, Ohio 45343 · (513) 866-1711 · (800) 356-9089 · FAX (513) 866-7473

QSOURCE ENVIRONMENTAL SERVICES, INC.

SUBSURFACE EXPLORATION LOG

PROJECT Gem City Chemicals PROJECT # 193004

PIT OR BORING # P-5

PAGE 3 OF 3

DEPTH	SAMPLE INFORMATION #	TYPE	FROM / TO	REC	BLOW CT ADV RATE	ELEV	MATERIAL / DRILLING AND OTHER NOTES
30							
	8	SS	29'-31'	1.3'	16 25		SAND, coarse, little granules, few pebbles (to 1/2"), trace silt, 10 YR 6/3, PID = 0.5
32							
34							
	9	SS	34'-36'	1.8'	15 19 22		PEBBLES and GRANULES, little coarse sand fining downward to SAND, coarse to very coarse, little granules few medium sand, trace silt, PID = 0.4
36							
38							
40	10	SS	39'-41'	1.3'	33 20 13 14		PEBBLES and GRANULES, few fine to medium sand, trace silt, saturated, PID = 0.5
42							
44							
	11	SS	44'-46'	1.7'	28 16 20 23		SAND, coarse to very coarse, some pebbles, little granules, few fine to medium sand few silt, saturated, 10 YR 6/3, PID = 2.8
46							
48							
	12	SS	48'-50'	1.5'	42 40 41 45		PEBBLES and fragments (to 1.5"), some medium to coarse sand, little granules, few silt saturated, PID = 0.6
50							END OF BORING AT 50'

NOTES:

2490 Technical Drive · Miamisburg, Ohio 45343 · (513) 866-1711 · (800) 356-9039 · FAX (513) 866-7473

QSOURCE ENVIRONMENTAL SERVICES, INC.

SUBSURFACE EXPLORATION LOG

PIT OR BORING # P-6
PAGE 1 OF 3

PROJECT Gem City Chemicals, Inc. PROJECT # 193004

GENERAL SITE LOCATION 1287 Air City Avenue

STATE Ohio COUNTY Montgomery CITY/TWP Dayton SEC

LOCATION ON THE SITE North of office building, adjacent to dike surrounding acid tanks

METHOD(S) 6 1/4" HSA RIG CME-75 HOLE DIA. 12" SAMPLER & SIZE 2"x24" Split Spoon

DRILLING CO. Moody's of Dayton DRILLERS P. Ridder, J. D. Hobbs LOGGED BY Clinch, Vanderhorst

DATE STARTED 1/25/93 DATE FINISHED 1/26/93

x BORING COMPLETED AS A piezometer, P-6 OR _ BACKFILLED DATE / / MATERIAL

DEPTH TO WATER: Encountered at 20 ', At completion N.A. ', On 2/8/93 water was at 21.70' (TOC)

DEPTH	SAMPLE INFORMATION #	TYPE	FROM / TO	REC	BLOW CT ADV RATE	ELEV.	MATERIAL / DRILLING AND OTHER NOTES
							surface: gravel fill
0							
1	1	SS	0'-2'	0.7'	16 18 12 6		3" SILT and coal dust, little pebbles, 10 YR 3/2 grading downward into 6" SILT and little pebbles, trace fine to medium sand, 10 YR 4/2, moist, PID = 0
2							
3	2	SS	2'-4'	0.8'	5 9 9 12		SAND, medium to coarse, some pebbles and broken pebble fragments, moist, 10 YR 5/3, PID = 0
4							
5	3	SS	4'-6'	1.0'	13 15 17 20		SAND, medium to coarse, some pebbles and broken pebble fragments (to 2"), little fine to medium sand, little granules, few silt (pebble caps) 10 YR 6/4, PID = 0.2
6							
7	4	SS	6'-8'	1.0'	27 45 45 45		SAME AS ABOVE, with oxidized spots, 2.5 YR 5/6 (HEAVY RIG CHATTER, CLASTS TO 6" IN FLIGHTS)
8							
9	5	SS	8'-10'	1.3'	30 60 55 47		PEBBLES and pebble fragments, some coarse to very coarse sand, little granules, trace silt dry, 10 YR 7/4 with oxidized 10 YR 5/4 zones, PID = 0.55
10							

2490 Technical Drive · Miamisburg, Ohio 45343 · (513) 866-1711 · (800) 356-9039 · FAX (513) 866-7473

QSOURCE ENVIRONMENTAL SERVICES, INC.

SUBSURFACE EXPLORATION LOG

PROJECT Gem City Chemicals, Inc. PROJECT # 193004

PIT OR BORING # P-6

PAGE 2 OF 3

DEPTH	SAMPLE INFORMATION #	TYPE	FROM / TO	REC	BLOW CT ADV RATE	ELEV	MATERIAL / DRILLING AND OTHER NOTES
10							
					42		PEBBLES and broken pebble fragments, some
	6	SS	10'-11.25'	0.4'	30		coarse to very coarse sand, little granules
					50/3"		PID = 0.27
12							(RIG CHATTER CONTINUES)
							SPLIT SPOON REFUSAL ON A COBBLE
	7	SS	12'	0	100/0"		(HEAVY RIG CHATTER - DRILL RIG
							LIFTED OFF OF JACKS AT TIMES)
14							
					20		SAND, medium to coarse, some pebbles, little
	8	SS	14'-16'	1.2'	22		granules, little fine sand, trace silt
					23		moist 10 YR 6/6, PID = 0.36
16					30		
					21		SAND, coarse to medium, faint planar bedding,
	9	SS	16'-18'	1.2'	27		fining upward over 6", interbedded with
					37		PEBBLES, with little sand and trace silt in
18					40		3" thick beds, moist, PID = 0.8
					22		SAME AS ABOVE, wet at tip of split spoon,
	10	SS	18'-20'	1.6'	20		PID = 0.75
					18		
20					18		
					7		SAND, medium to coarse, little very coarse
	11	SS	20'-22'	1.5'	11		sand, few granules, trace small pebbles,
					14		trace silt, 10 YR 6/4, saturated,
22					17		PID = 0.5
					13		SAND, in coarsening upward cycles over 1 foot
	12	SS	22'-24'	2.0'	24		from medium sand through thin pebble zones
					28		(with interstitial fine sand and silt)
24					25		PID = 0.4
					30		0.8' SAND, coarse to very coarse
	13	SS	24'-26'	1.9'	65		sharp, oxidized contact
					35		1.1' PEBBLES and broken pebble fragments,
26					30		little sand, few silt, PID = 0.4
					11		GRANULES and PEBBLES, some very coarse sand,
	14	SS	26'-28'	1.2'	10		little fine to medium sand, few silt,
					12		saturated 10 YR 6/4, PID = 0.5
28					25		-- fining downward into --
					20		SAND, very coarse, little granules, trace silt
	15	SS	28'-30'	1.6'	23		-- fining downward into --
					20		SAND, medium to coarse, trace silt
30					22		PID = 0.3

NOTES:

2490 Technical Drive · Miamisburg, Ohio 45343 · (513) 866-1711 · (800) 356-9089 · FAX (513) 866-7473

QSOURCE ENVIRONMENTAL SERVICES, INC.

SUBSURFACE EXPLORATION LOG

PROJECT Gem City Chemicals PROJECT # 193004

PIT OR BORING # P-6

PAGE 3 OF 3

DEPTH	SAMPLE INFORMATION #	TYPE	FROM / TO	REC	BLOW CT ADV RATE	ELEV	MATERIAL / DRILLING AND OTHER NOTES
30							
					8		SAND, coarse, little very coarse sand and
	16	SS	30'-32'	1.4'	10		granules, little fine to medium sand,
					18		trace silt, 2.5 Y 6/3, PID = 0.30
32					24		-- fining downward to --
					8		SAND, medium, little coarse to very coarse
	17	SS	32'-34'	0.9'	16		sand, trace silt, PID = 0.56
					30		
34					43		small pebbles in tip
					25		SAND, coarse to very coarse, few granules,
	18	SS	34'-36'	1.7'	25		few fine to medium sand, trace pebbles,
					22		trace silt, 2.5 Y 6/3
36					22		
					30		SAND, very coarse, little pebbles in discrete
	19	SS	36'-38'	1.5'	30		3" layers, little granules, few fine sand,
					32		few silt, in in 1' thick, fining upward
38					25		beds
					22		SAND, very coarse, some pebbles and broken
	20	SS	38'-40'	1.3'	18		fragments (to 2"), little granules, little
					19		fine to medium sand, few silt
40					18		
					16		SAND, very coarse, some pebbles and fragments
	21	SS	40'-42'	1.2'	16		little granules, few silt, trace fine sand,
					28		PID = 0.30
42					26		
					14		PEBBLES, some very coarse sand, little granules
	22	SS	42'-44'	1.2'	12		few silt, trace fine sand, PID = 0.30
					23		
44					21		
					18		SAND, very coarse, some pebbles and fragments
	23	SS	44'-46'	1.3'	18		(to 1 1/2"), little granules, few silt,
					18		trace fine sand, PID = 0.25
46					20		
					20		SAME AS ABOVE, PID = 0.11
	24	SS	46'-48'	1.5'	24		
					28		
48					22		
					24		SAME AS ABOVE, PID = 0.33
	25	SS	48'-50'	1.3'	24		
					16		
50					20		
							END OF BORING AT 50'

NOTES:

2490 Technical Drive · Miamisburg, Ohio 45343 · (513) 866-1711 · (800) 356-9039 · FAX (513) 866-7473

Piezometer Installed
Jan. 4, 1989

P-1

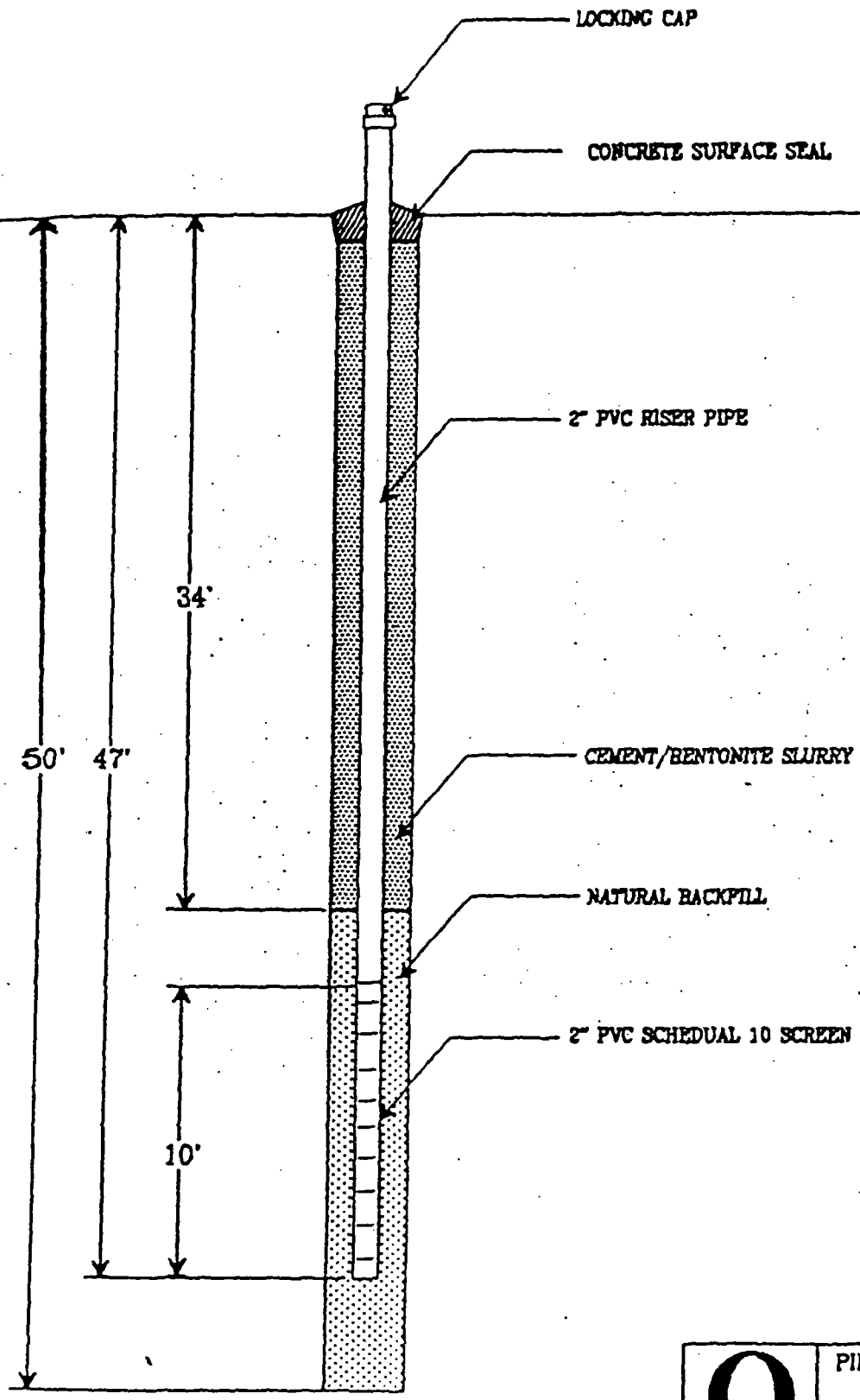

QSOURCE
ENVIRONMENTAL SERVICES, INC.

PIEZOMETER CONSTRUCTION DETAILS
GEM CITY CHEMICALS
DAYTON, OHIO

Drawn By: GBC Proj. No. 102 00002
Date: 1/19/90 Page: ____

AS-BUILT RECORD DRAWING
QSOURCE ENVIRONMENTAL SERVICES, INC.

PROJECT # I93004 **BOREHOLE #** P-2 **PIEZOMETER #** 2

DATE INSTALLATION COMPLETED 1 / 18/ 93

LOCATION ON SITE northern corner, northern $CaCL_2$ tank pad (in line with P-3 and P-1)

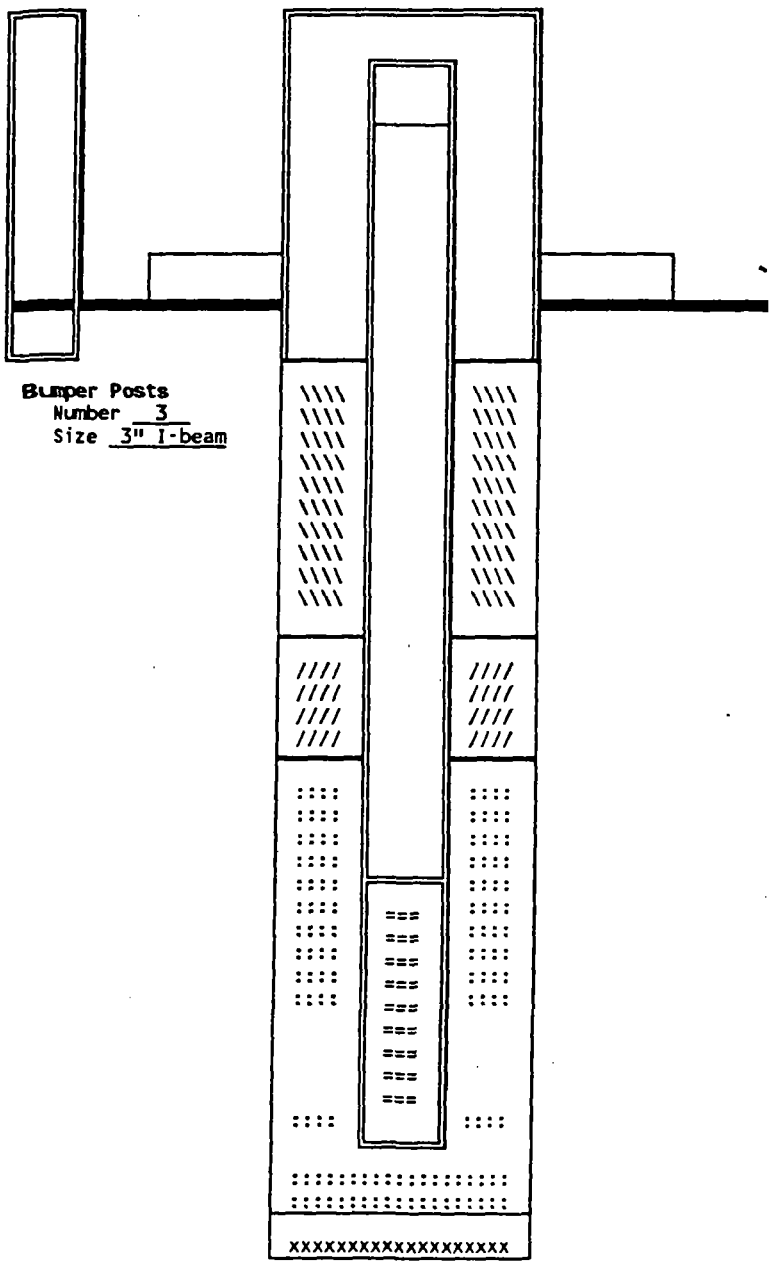

DEPTH	ELEV.	
2.55	754.78	Top of Security Riser
2.24	754.57	Top of well Casing
0.45	752.88	Top of Pad Size 3' X 3'
0.0	752.33	Ground Surface
5.2	747.1	Top of Grout

Grout in annular void:
made of cement with 3-5% bentonite
volume

Riser: Material PVC Sch. 40
Dia. 1 1/4" Length 50.18

44.0	708.3	Top of Pack Seal

Filter Pack Seal:
Made of 3/8" volclay pellets

45.6	706.7	Top of Filter Pack

Filter Pack: Made of Global #5 sand
Volume 50 lb. (0.5 ft^3)

48.01	704.32	Top of Slots

Screen Section Made of Sch. 40 PVC
Dia. 1 1/4 in. Length 2.41 ft.
Slot Size 0.010 in.

23.18 (TOC)	731.39	Water Level on 2 / 8 / 93
50.19	702.14	Bottom of Slots
50.42	701.91	Bottom of Well
51.0	701.3	Bottom of Filter Pack

Material below Filter Pack none

51.0	701.3	Bottom of Borehole
9	inches	Borehole Diameter

AS-BUILT RECORD DRAWING
QSOURCE ENVIRONMENTAL SERVICES, INC.

PROJECT # I93004 **BOREHOLE #** P-3 **PIEZOMETER #** 3

DATE INSTALLATION COMPLETED 1/14/93

LOCATION ON SITE 197' E of west fence, 53' S of north fence, in line with P-1and P-2

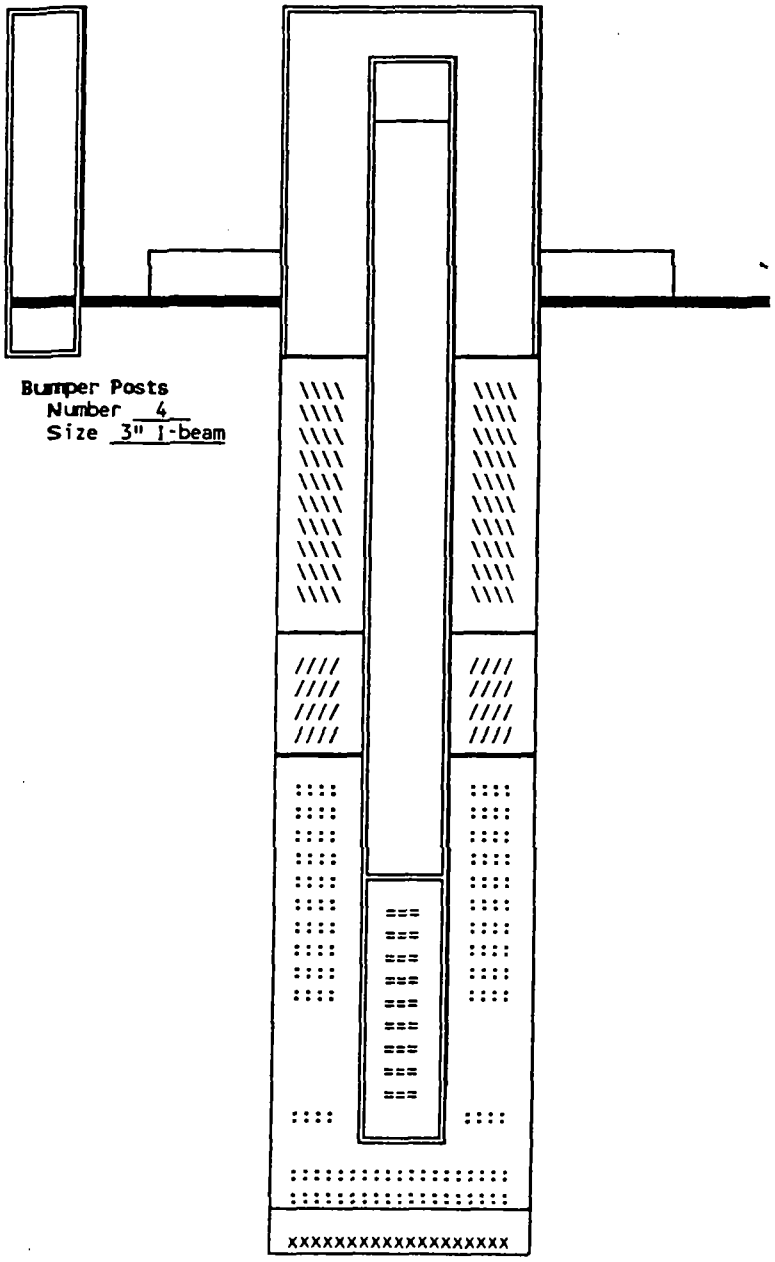

DEPTH	ELEV.	
2.23	754.47	Top of Security Riser
2.05	754.29	Top of well Casing
0.10	752.34	Top of Pad Size 3' X 3'
0.0	752.24	Ground Surface
3.9	748.3	Top of Grout

Grout in annular void:
made of cement with 3-5% bentonite
volume

Riser: Material PVC Sch. 40
Dia. 1 1/4" Length 48.73'

44.8'	707.4	Top of Pack Seal

Filter Pack Seal:
Made of 3/8" volclay pellets

46.4'	705.8	Top of Filter Pack

Filter Pack: Made of Global #5 sand
Volume 50 lb. (0.5 ft^3)

46.63'	705.61	Top of Slots

Screen Section Made of Sch. 40 PVC
Dia. 1 1/4 in. Length 2.41 ft.
Slot Size 0.010 in.

22.92 (TOC)	731.37	Water Level on 2 / 8 / 93
48.79	703.45	Bottom of Slots
49.03	703.21	Bottom of Well
49.75	702.5	Bottom of Filter Pack

Material below Filter Pack none

49.75	702.5	Bottom of Borehole
9	inches	Borehole Diameter

AS-BUILT RECORD DRAWING
QSOURCE ENVIRONMENTAL SERVICES, INC.

PROJECT # I93004 **BOREHOLE #** P-4A **PIEZOMETER #** 4

DATE INSTALLATION COMPLETED 1 / 27 / 93

LOCATION ON SITE 35 feet SE of recovery well, behind office building

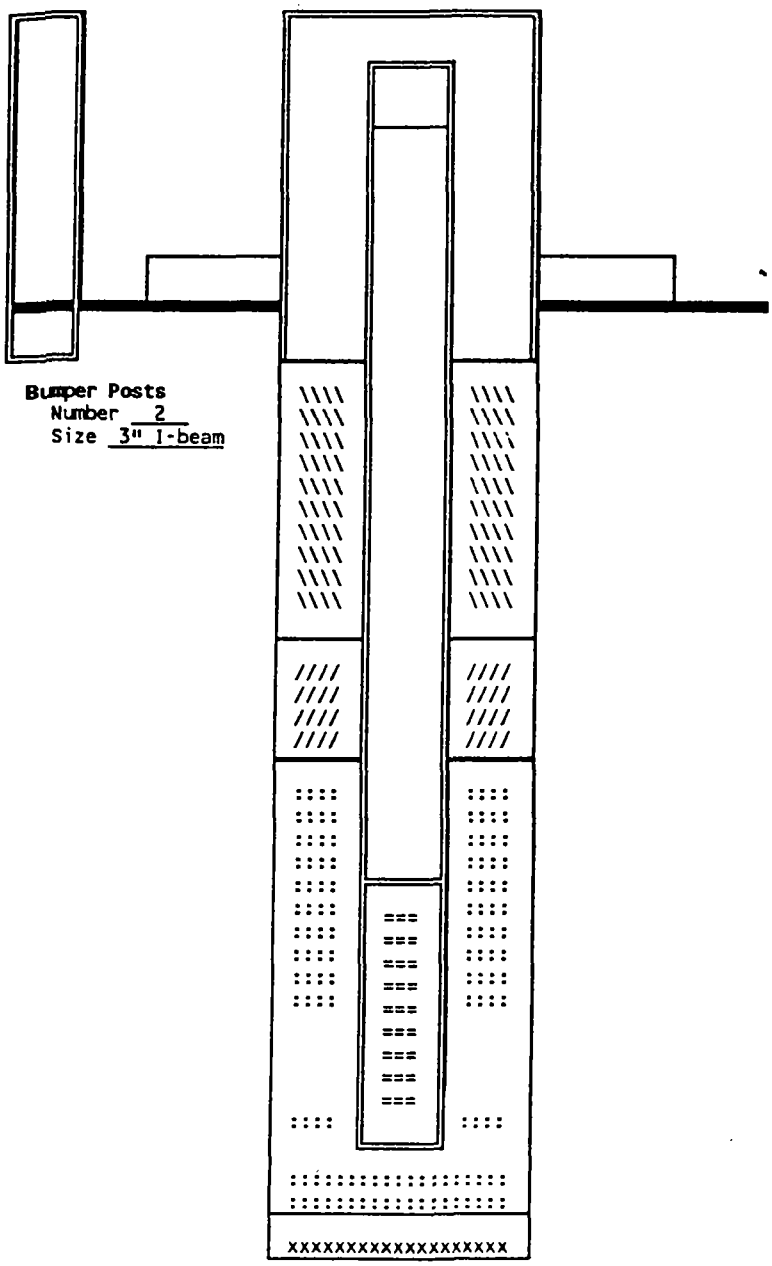

DEPTH	ELEV.	
2.15	753.70	Top of Security Riser
2.01	753.56	Top of well Casing
0.10	751.65	Top of Pad Size 3' X 3'
0.0	751.55	Ground Surface
2.5	749.1	Top of Grout

Grout in annular void:
made of cement with 3-5% bentonite
volume 20 gallons

Riser: Material PVC Sch. 40
Dia. 1 1/4" Length 48.73'

20.0'	731.6	Top of Pack Seal

Filter Pack Seal:
Made of volclay donuts, 6" ea.

75.0'	676.6	Top of Filter Pack

Filter Pack: Made of Global #5 sand
Volume 200 lb. (2.0 ft^3)

76.13'	675.42	Top of Slots

Screen Section Made of Sch. 40 PVC
Dia. 2.0 in. Length 5.10 ft.
Slot Size 0.010 in.

22.39 (TOC)	731.17	Water Level on 2 / 8 / 93
80.99	670.56	Bottom of Slots
81.25	670.30	Bottom of Well
81.25	670.30	Bottom of Filter Pack

Material below Filter Pack none

81.25	670.30	Bottom of Borehole
12	inches	Borehole Diameter

AS-BUILT RECORD DRAWING
QSOURCE ENVIRONMENTAL SERVICES, INC.

PROJECT # I93004 **BOREHOLE #** P-5 **PIEZOMETER #** 5

DATE INSTALLATION COMPLETED 1 / 23 / 93

LOCATION ON SITE in front of office building, between entrance doors, in planter area

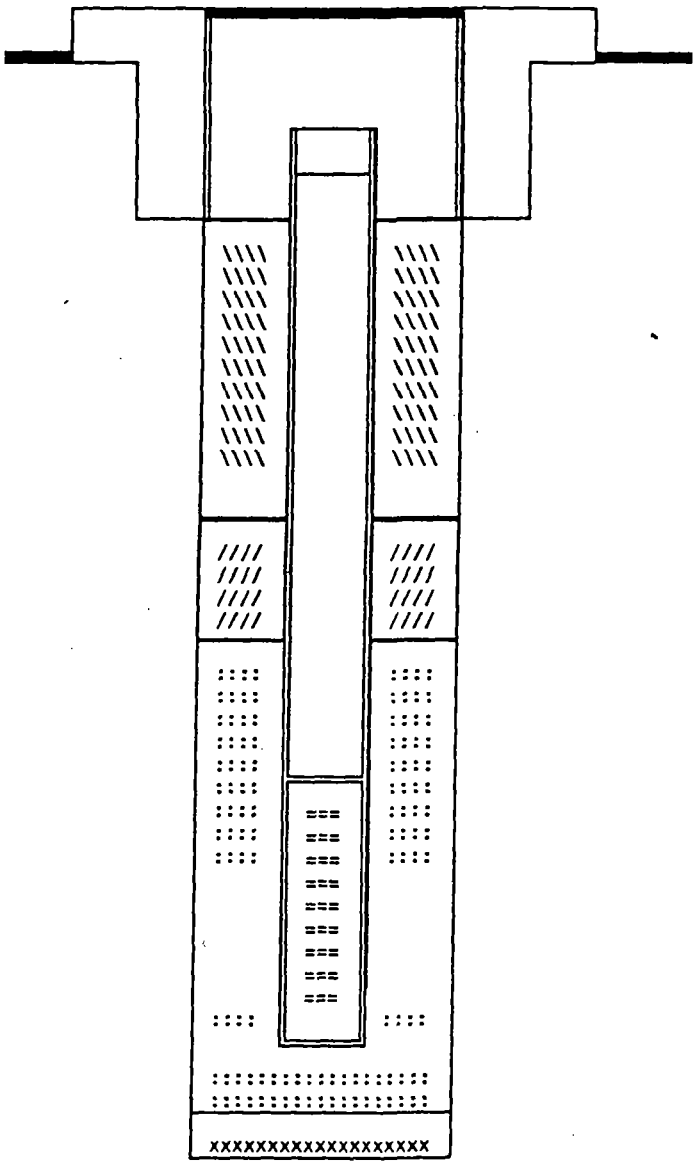

DEPTH	ELEV.	
0.0'	750.13	Top of Pad Size 3' x 3'
0.0'	750.13	Ground Surface
0.20	749.93	Top of well Casing

Security Cover: 10 " **Dia.** 6 " **Depth**

2.2	747.9	Top of Grout

Grout in annular void:
made of cement with 3-5% bentonite

volume 35 gallons

Riser: Material PVC Sch. 40
Dia. 1 1/4 Length 48.46

44.9	705.2	Top of Pack Seal

Filter Pack Seal:
Made of 4 volclay donuts, 6" ea.

46.9	703.2	Top of Filter Pack

Filter Pack Made of Global # 5 sand

Volume 3/4 ft^3

47.61	702.52	Top of Slots

Screen Section Made of Sch. 40 PVC
Dia. 1 1/4 in. Length 2.42 ft.
Slot Size 0.010 in.

18.71 (TOC)	731.14	Water Level on 2 / 8 / 93
49.79	700.34	Bottom of Slots
50.04	700.09	Bottom of Well
50.04	700.09	Bottom of Filter Pack

Material below Filter Pack none

50.04	700.09	Bottom of Borehole
12	inches	Borehole diameter

AS-BUILT RECORD DRAWING
QSOURCE ENVIRONMENTAL SERVICES, INC.

PROJECT # I93004 **BOREHOLE #** P-6 **PIEZOMETER #** 6

DATE INSTALLATION COMPLETED 1 / 26 / 93

LOCATION ON SITE north side of diked area surrounding acid tanks, north side of office building

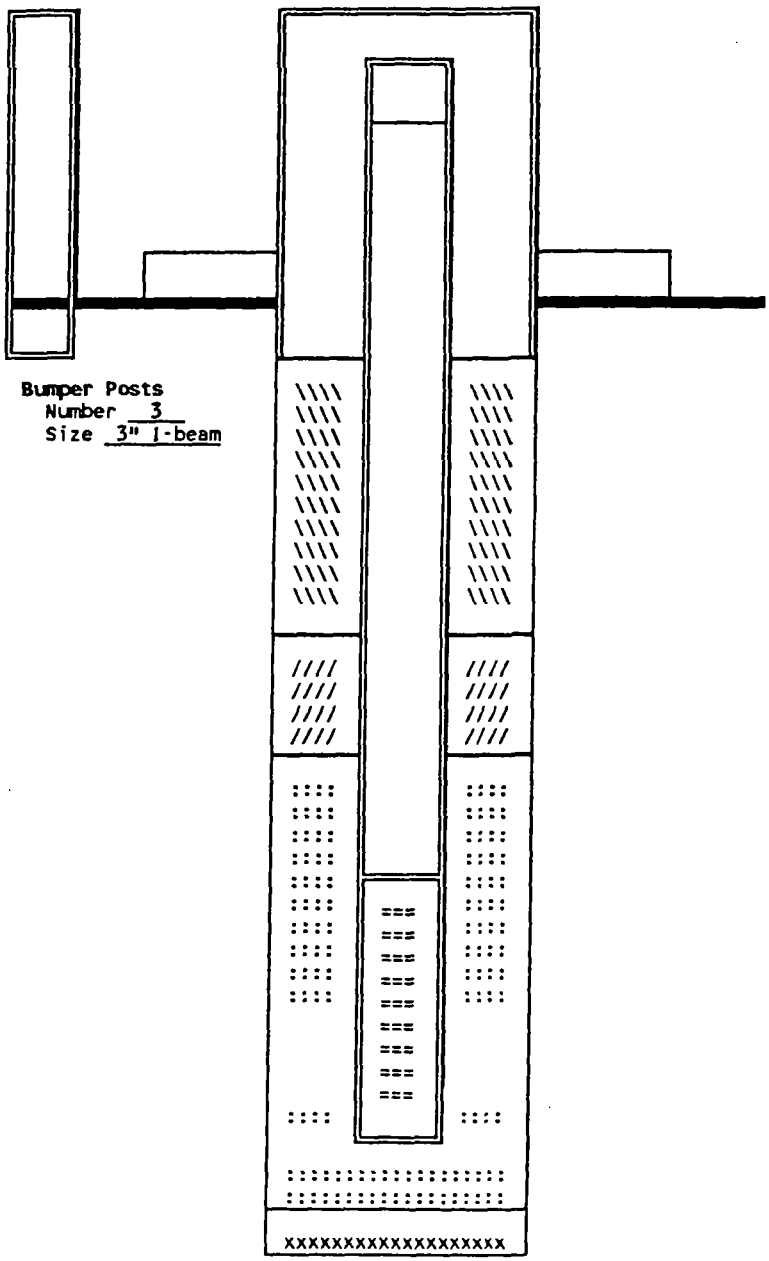

DEPTH	ELEV.	
2.58	753.05	Top of Security Riser
2.44	752.91	Top of well Casing
0.34	750.81	Top of Pad Size 5' x 5'
0.0	750.47	Ground Surface
3.5	747.0	Top of Grout

Grout in annular void:
made of cement with 3-5% bentonite
volume 35 gallons

Riser: Material PVC Sch. 40
Dia. 1 1/4" Length 48.73'

44.0	706.5	Top of Pack Seal

Filter Pack Seal:
Made of 4 volclay donuts, 6" ea.

46.0	704.5	Top of Filter Pack

Filter Pack: Made of Global #5 sand
Volume 100 lb. (1.0 ft^3)

47.41	703.06	Top of Slots

Screen Section Made of Sch. 40 PVC
Dia. 1 1/4 in. Length 2.41 ft.
Slot Size 0.010 in.

21.70 (TOC)	731.21	Water Level on 2 / 8 / 93
49.59	700.88	Bottom of Slots
49.84	700.63	Bottom of Well
50.1	700.4	Bottom of Filter Pack

Material below Filter Pack none

50.1	700.4	Bottom of Borehole
12	inches	Borehole Diameter

QSOURCE ENVIRONMENTAL SERVICES, INC.

SUBSURFACE EXPLORATION LOG

PIT OR BORING # Pit - 1

PAGE 1 OF 1

PROJECT Gem City Chemicals, Inc. PROJECT # 193004

GENERAL SITE LOCATION 1287 Air City Avenue

STATE Ohio COUNTY Montgomery CITY/TWP Dayton SEC

LOCATION ON THE SITE Intersection of Melberth and Air City Drive, adjacent to sewer manhole

METHOD(S) backhoe RIG N. A.

Excavators City of Dayton, Dept.of Water LOGGED BY J. Michael Clinch

DATE STARTED 1/19/93 DATE FINISHED 1/20/93

X BACKFILLED DATE 1/20/93 MATERIAL excavated material

DEPTH TO WATER: Encountered at N. E. ', At completion N. A. ', After N. A. Hrs. water was at N. A.'

DEPTH	MATERIAL	DRILLING AND OTHER NOTES
	surface: Asphalt paving material	
0	----------	
1	Coarse gravel subgrade	
2	The excavation was completed long the right-of-way for the sanitary sewer, and most of	
3	the material exposed consisted of disturbed, natural material, used as backfill	
4		
5	In portions of the pit where undisturbed materials were present, the entire exposure	
6	consisted of crudely planar bedded sand and gravel outwash. The individual beds were	
7	approximately 6" to 9" thick.	
8		
9	The beds consisted of a layer of coarse pebbles and cobbles (maximum cobble size 4"x4"x6")	
10	containing interstitial fine-to-medium sand and silt. The finer-grained deposits appeared	
11	to be an interstitial fill, deposited within the pre-existing cobble layer.	
12		
13	The coarse clast layers are separated by planar-bedded coarse sands and granules, with	
14	trace silt.	
15		
16	There was no evidence of erosion or truncation of the individual beds.	

2490 Technical Drive · Miamisburg, Ohio 45343 · (513) 866-1711 · (800) 356-9039 · FAX (513) 866-7473

Gem City Chemicals, Inc.
Potentiometric Surface Data

WELL	DATE	TIME	TOC ELEVATION	DEPTH TO WATER	POTENTIOMETRIC SURFACE ELEVATION
MW-1	02/08/93	09:35	754.87	23.32	731.55
MW-2	02/08/93	09:48	753.69	22.41	731.28
MW-3	02/08/93	09:23	755.88	24.50	731.38
MW-4	02/08/93	09:43	754.95	23.55	731.40
MW-5S	02/08/93	09:53	751.20	19.93	731.27
MW-5M	02/08/93	09:55	751.53	20.18	731.35
MW-5D	02/08/93	09:57	751.16	19.85	731.31
MW-6S	02/08/93	09:27	754.97	23.53	731.44
MW-6M	02/08/93	09:29	755.55	23.91	731.64
MW-6D	02/08/93	09:31	755.77	24.15	731.62
P-1	02/08/93	10:00	754.51	23.89	730.62
P-2	02/08/93	09:41	754.57	23.18	731.39
P-3	02/08/93	09:38	754.29	22.92	731.37
P-4	02/08/93	10:03	753.56	22.39	731.17
P-5	02/08/93	10:09	749.93	18.71	731.22
P-6	02/08/93	10:17	752.91	21.70	731.21
RW-1			753.47	N. D.	

QSOURCE ENVIRONMENTAL SERVICES, INC.

Qsource Project No. I93004
Gem City Chemicals, Inc.
Potentiometric Surface Data

WELL	DATE	TIME	TOC ELEVATION	DEPTH TO WATER	POTENTIOMETRIC SURFACE ELEVATION
MW-1	2/23/93	12:57	754.87	23.58	731.29
MW-2	2/23/93	12:46	753.69	22.61	731.08
MW-3	2/23/93	13:07	755.88	24.81	731.07
MW-4	2/23/93	12:49	754.95	23.85	731.10
MW-5S	2/23/93	12:36	751.20	20.13	731.07
MW-5M	2/23/93	12:35	751.53	20.42	731.11
MW-5D	2/23/93	12:34	751.16	20.05	731.11
MW-6S	2/23/93	13:06	754.97	23.80	731.17
MW-6M	2/23/93	13:04	755.55	24.19	731.36
MW-6D	2/23/93	13:02	755.77	24.43	731.34
P-1	2/23/93	13:14	754.51	24.01	730.50
P-2	2/23/93	12:51	754.57	23.42	731.15
P-3	2/23/93	12:33	754.29	23.15	731.14
P-4	2/23/93	13:12	753.56	22.63	730.93
P-5	2/23/93	13:26	749.93	18.93	731.00
P-6	2/23/93	12:44	752.91	21.90	731.01
RW-1			753.47	n.d.	n.d.

ALL MEASUREMENTS MADE RELATIVE TO TOP OF INNER CASING,
AT THE POSITION MARKED ON THE NORTH SIDE OF THE CASING

WEATHER _____

MEASUREMENTS BY _____

OTHER OBSERVATIONS _____

MOODY'S of Dayton, Inc.

P.O. DRAWER 509 • MIAMISBURG, OHIO 45342 • 513-859-4482

FILE 162.89009

AW-1

JOB NO. 49114

DATE 4/13/89

em City Chemical CITY Dayton STATE Ohio

Recovery LOCATION OF WELL Back left corner of building

Goulds SERIAL NO. 300L20

: Franklin DIAMETER 5.5 FRAME SERIAL NUMBER S14971

SEPOWER 20 VOLTS 230 PHASE 3 CYCLES 60 RPM 3450

LOAD AMPS 53.8 SERVICE FACTOR 1.15 S. F. AMPS 60.6

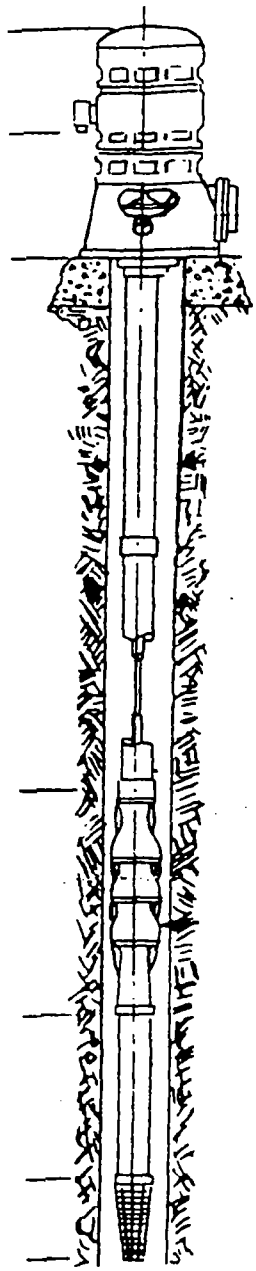

PUMP INFORMATION

DISCHARGE SIZE 4 "

AIRLINE LENGTH N/A '

TOP SHAFT LENGTH N/A

BLACK

COL. SIZE 4 " GALV. 50

CHECK VALVE TYPE inline SIZE 3"
Drilled hole in it.

SHAFT SIZE " C.S. S.S.

OIL TUBING SIZE "

POWER CABLE SIZE 8 awg

LENGTH 69'

PUMP BOWL: TYPE Goulds 300L30

DIA. 5.75 STAGES 5

SUCTION SIZE LENGTH

STRAINER SIZE LENGTH
Pump shroud-machined steel & exopied.

WELL INFORMATION

WELL NO. 1 TYPE Tubular

DEPTH 60' SCREEN LENGTH 20'

DIAMETER 8" S.W.L. 30'

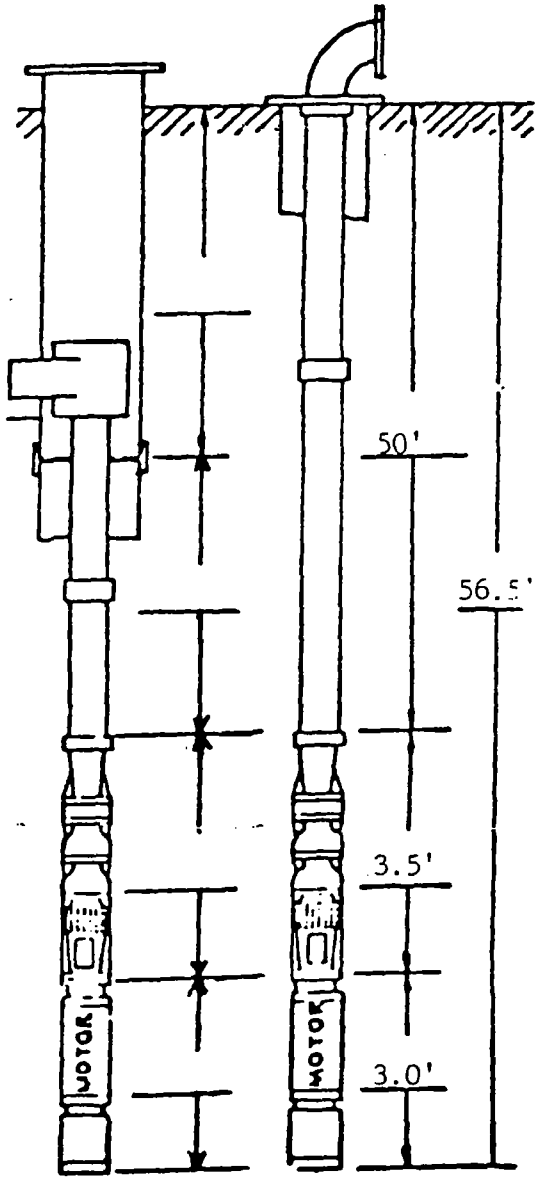

REMARKS: Static level and well depth measured at top of casing.

Pump went in tight because of shroud. 8" x 4" well seal on top of well.

Shawn Jones

EXHIBIT H

EXHIBIT I

As-Built Typical

MONITOR
WELLS
1-4
by The Ohio Drilling Company

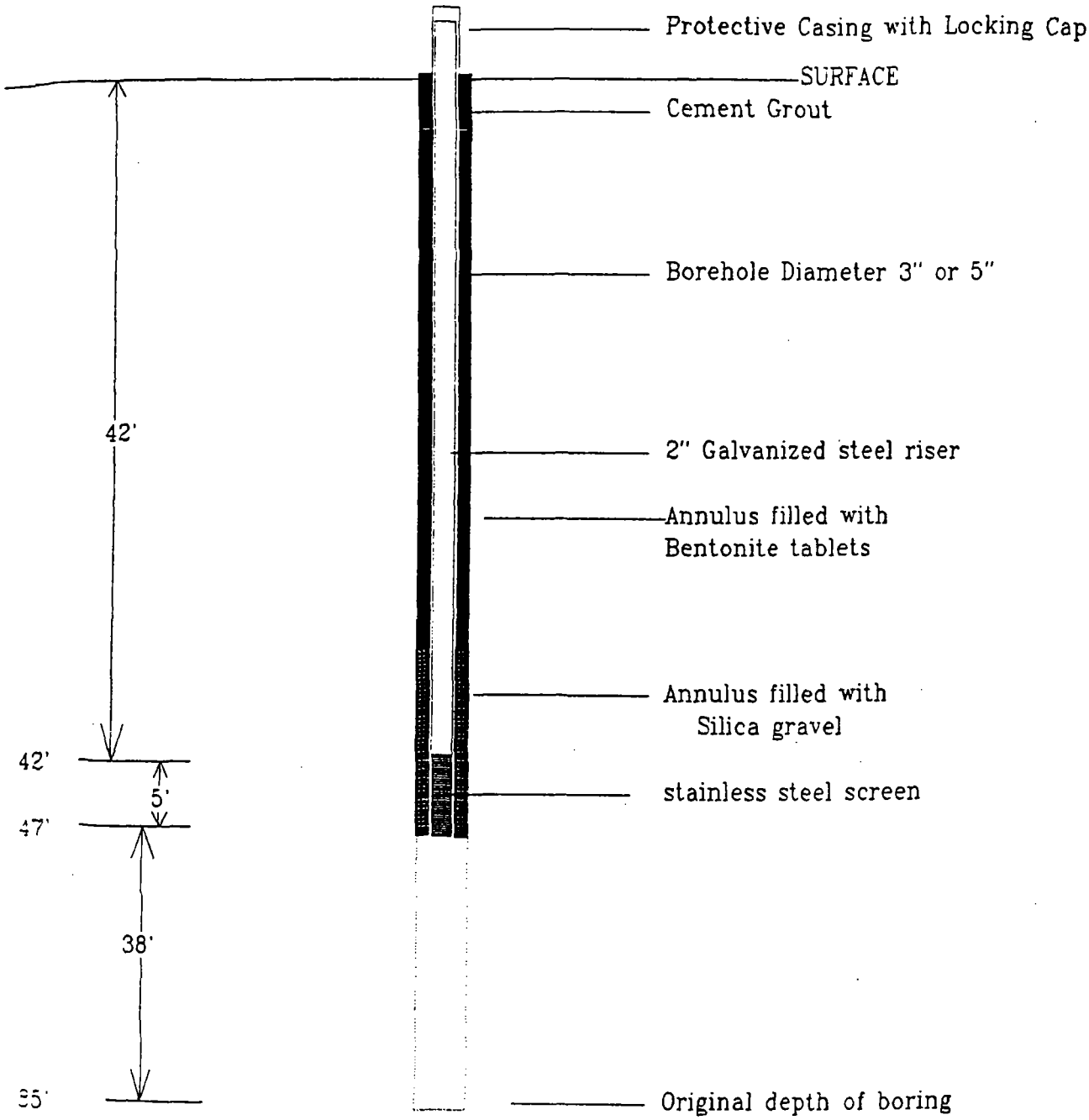

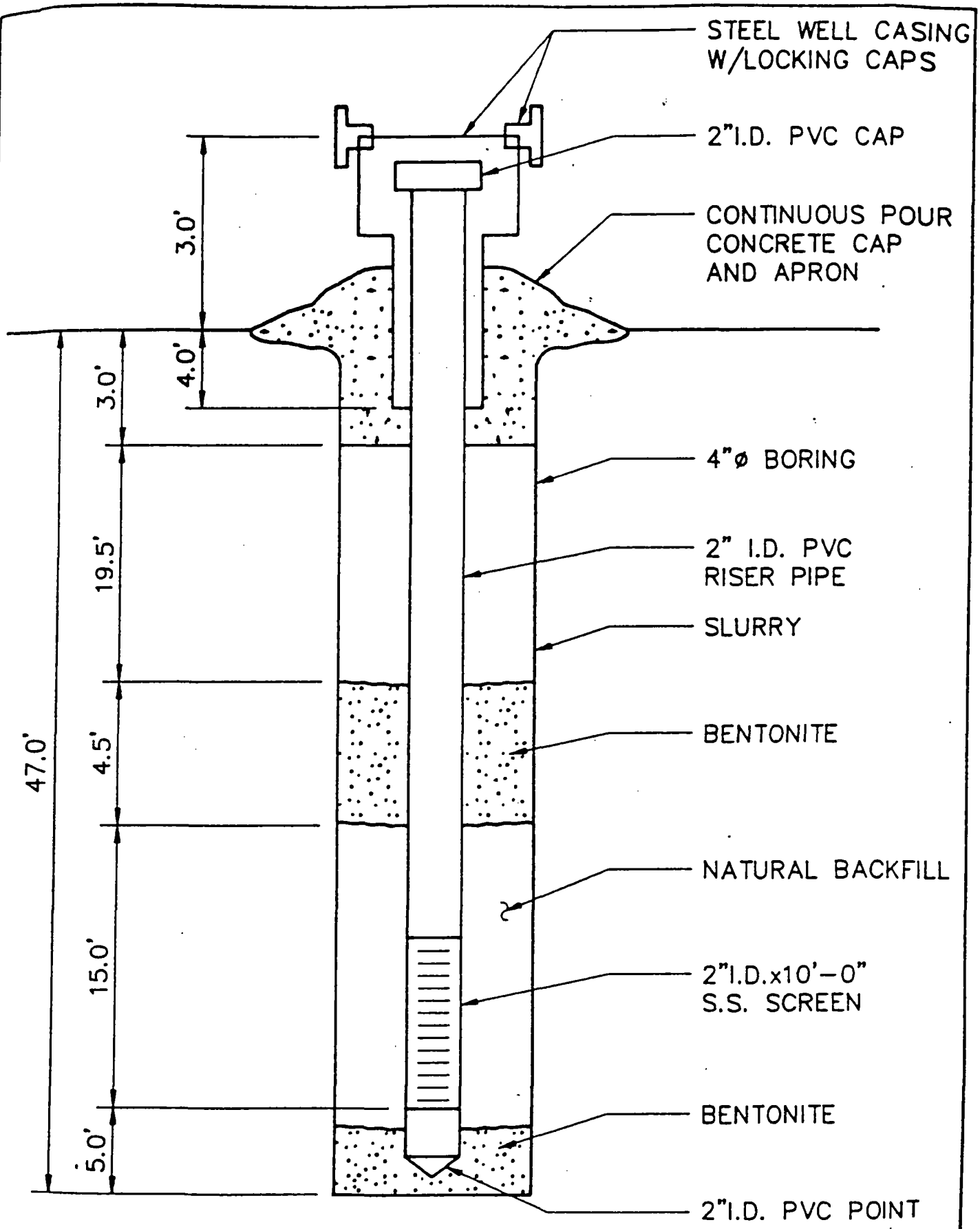

WELL CONSTRUCTION DETAILS

MONITORING WELL NO. MW~~6~~5-S

ASAD: RR134V02 (9-20-88 (b))

O: OURCE ENGINEERING, INC.

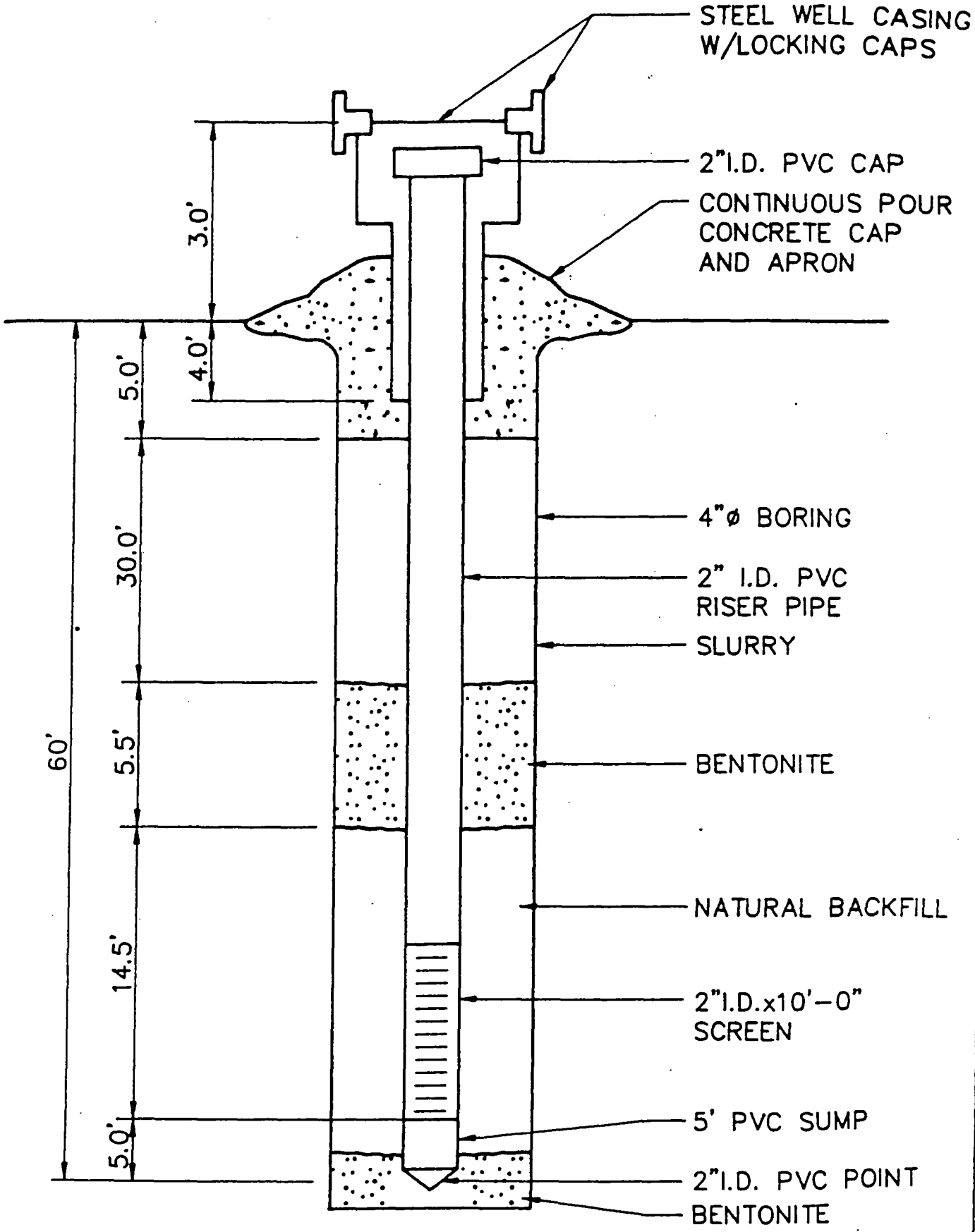

WELL CONSTRUCTION DETAILS

MW-5-M

(NOT TO SCALE)

OSOURCE ENGINEERING, INC.

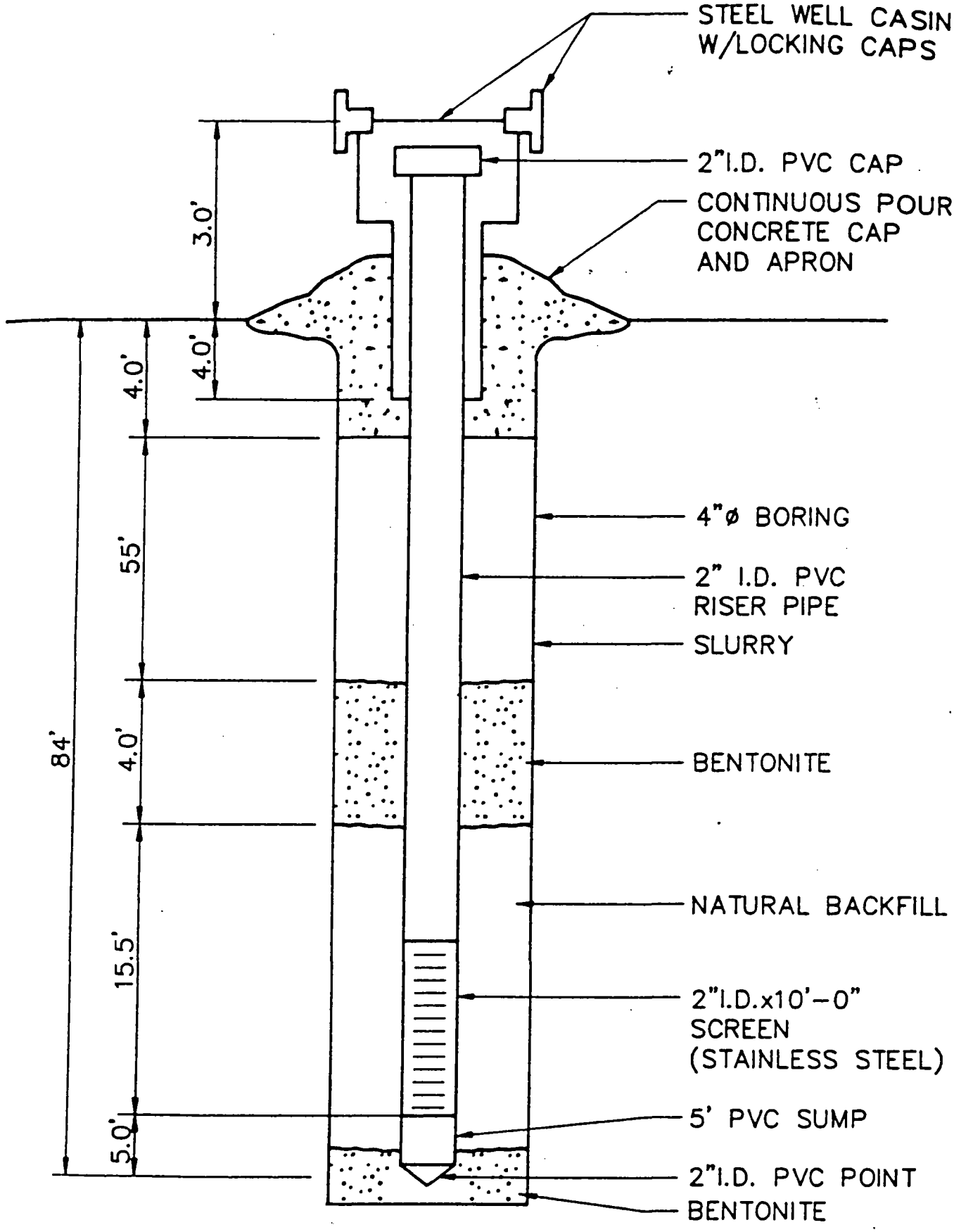

WELL CONSTRUCTION DETAILS

MW-5-D

ACAD: 88134V07/9-29-88/1:1

(NOT TO SCALE)

QSOURCE ENGINEERING, INC.

MOODY'S
of Dayton, Inc.
P.O. Box 123
4359 Infirmary Road
Miamisburg, Ohio 45342
513-859-4482

PIEZOMETER/MONITORING WELL LOG

MW5D

CUSTOMER: Gem City Chemical JOB NO. 48338 DATE 9/7/88 BORING NO. MW80N

ELEVATIONS: SURFACE TOP OF PIPE

TYPE WELL: 2" PVC

SCREEN TYPE, SIZE & SLOT:

2" x 10' stainless steel screen, .020" slot

INSTALLATION TIME & REMARKS:

DEVELOPMENT TIME & REMARKS:

WATER LEVELS

DATE	DEPTH

COMMENTS:

22 Bags cement
4 Bags Gold Seal
4 Bags Sackrete

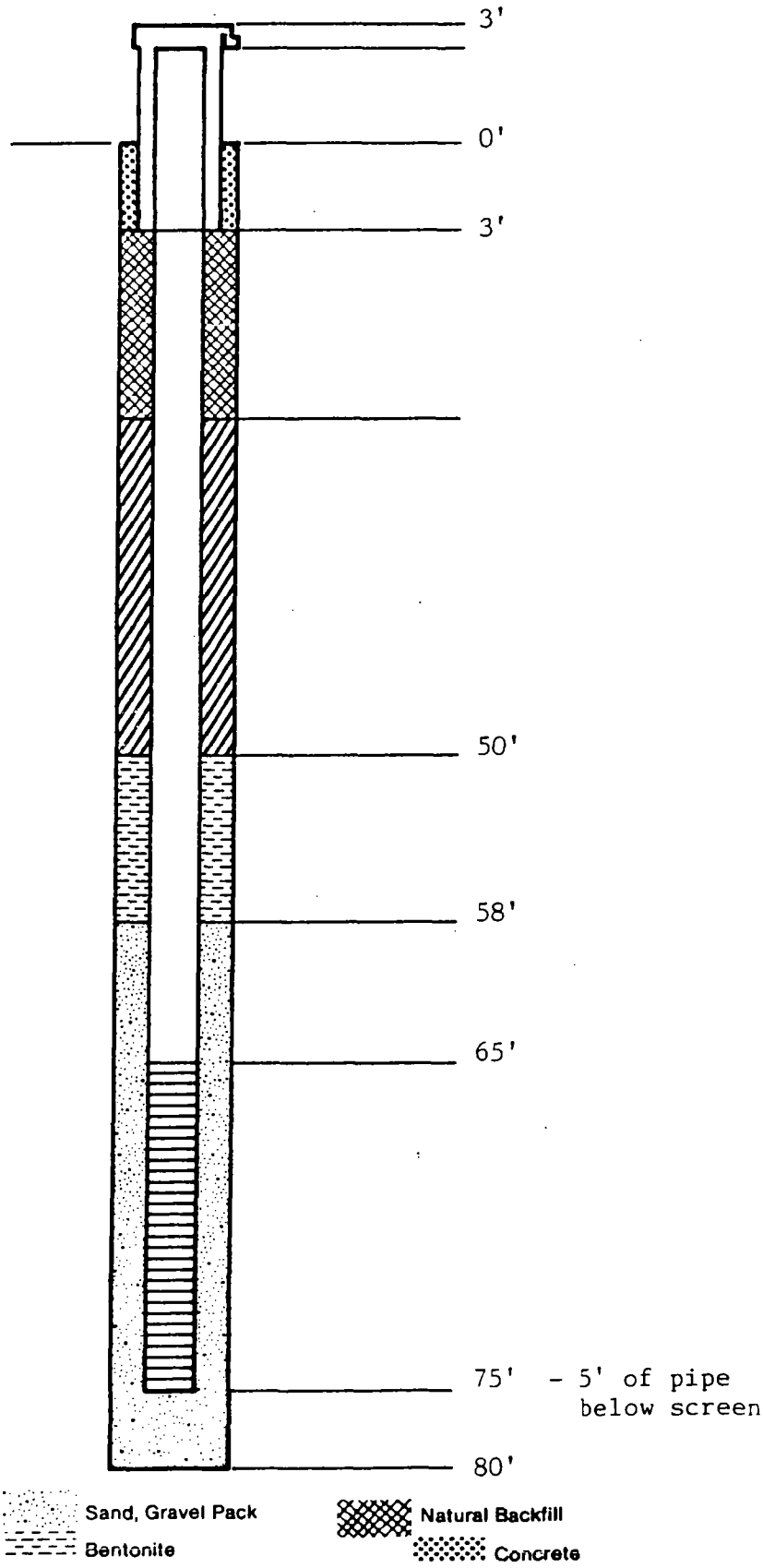

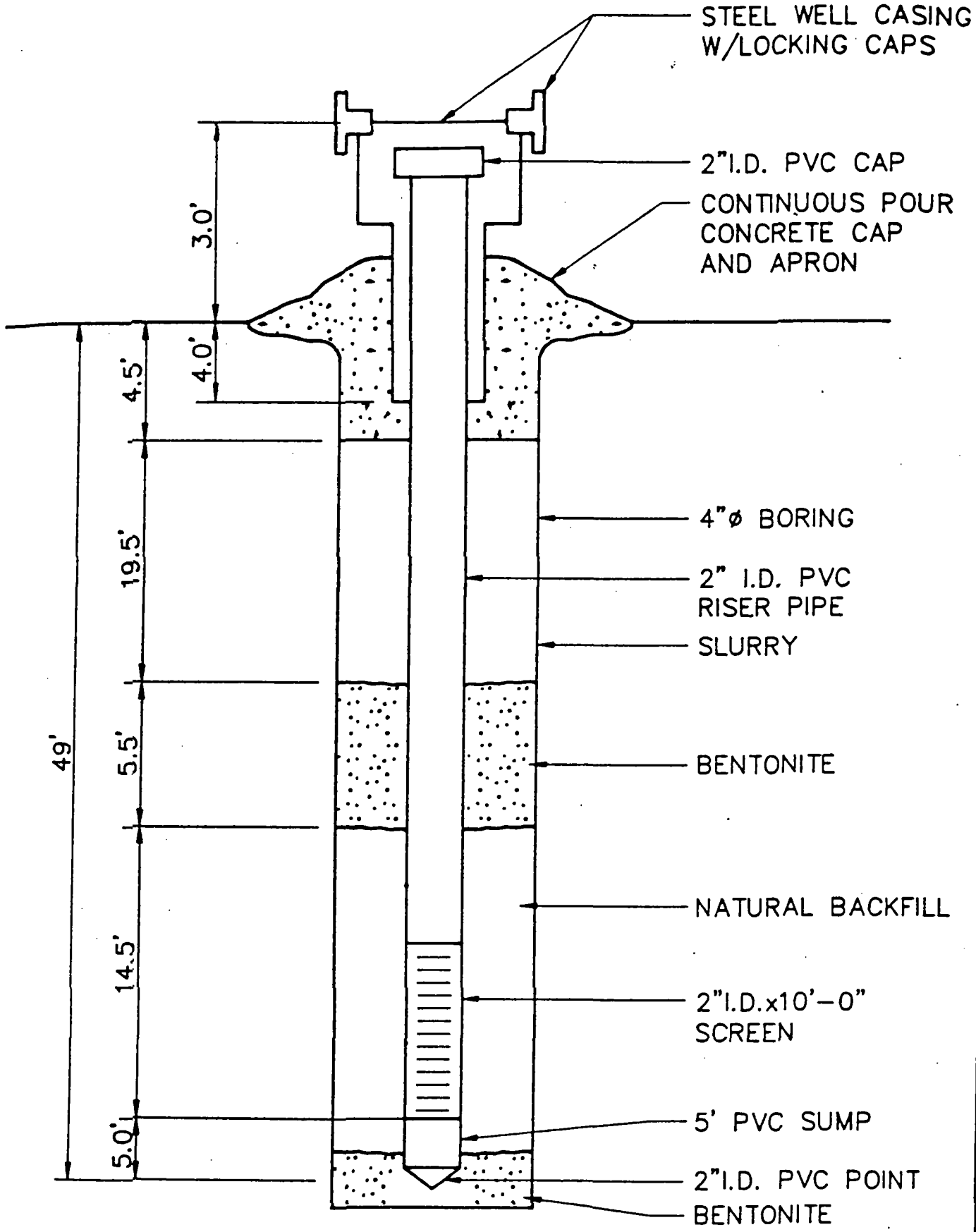

WELL CONSTRUCTION DETAILS

MW-6-S

ACAD: 88134V08/9-29-88/1:1

(NOT TO SCALE)

QSOURCE ENGINEERING, INC.

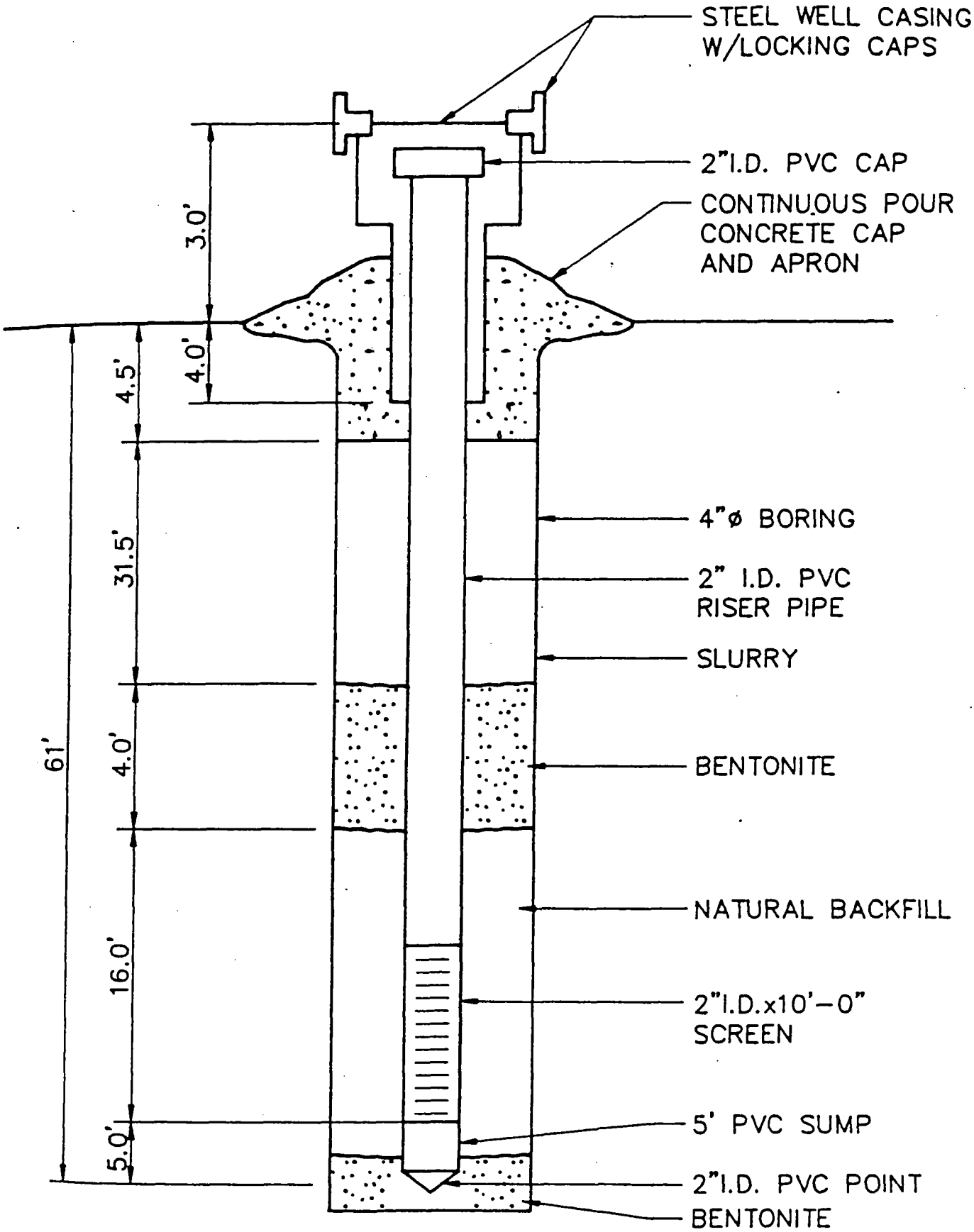

WELL CONSTRUCTION DETAILS

MW-6-M

ACAD: 88134V09/9-29-88/1:1

(NOT TO SCALE)

QSOURCE ENGINEERING, INC.

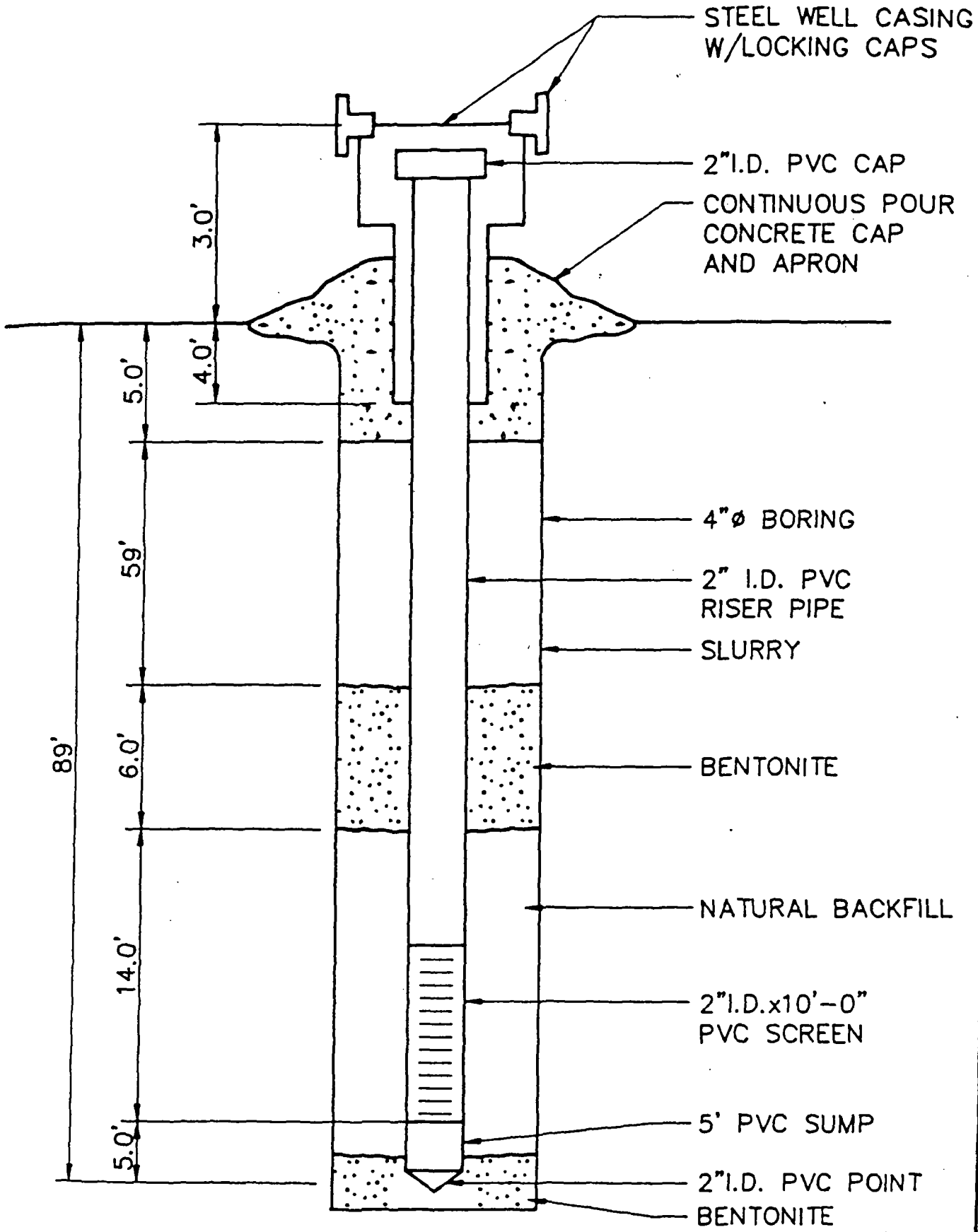

WELL CONSTRUCTION DETAILS

MW-6-D

ACAD: 88134V10/9-29-88/1:1

(NOT TO SCALE)

QSOURCE ENGINEERING, INC.

MOODY'S
of Dayton, Inc.
P.O. Box 123
4359 Infirmary Road
Miamisburg, Ohio 45342
513-859-4482

PIEZOMETER/MONITORING WELL LOG

CUSTOMER: Gem City Chemical JOB NO. 48338 DATE 9/5/88 BORING NO. MW90S

MW 6d

ELEVATIONS: SURFACE TOP OF PIPE

TYPE WELL: 2" PVC

SCREEN TYPE, SIZE & SLOT:

2" x 10' stainless steel screen, .020" slot

INSTALLATION TIME & REMARKS:

DEVELOPMENT TIME & REMARKS:

WATER LEVELS

DATE	DEPTH

COMMENTS:

24 Bags cement
4 Bags Gold Seal
3 Bags Sackrete

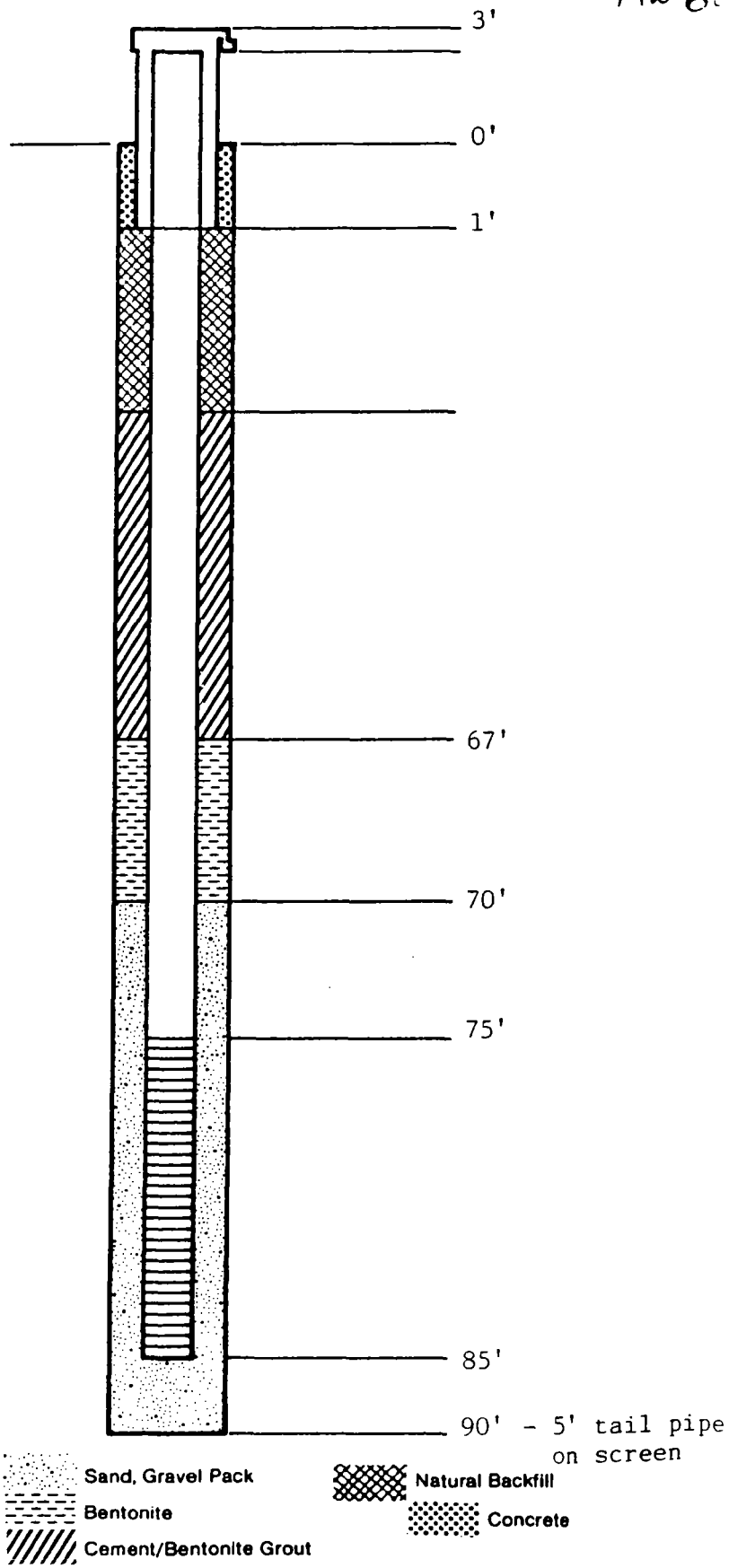

Qsource Drilling Log
Vapor Extraction Wells

Well # 1 Logged by G.Clyburn
Location 1287 Air City Drive
Dayton, Ohio
Date October 1988
Drill Co. John Mathes & Assoc.

Depths	Description
0'-18.0'	Gravel with some sand / clay
18' 22'4"	Sand and Gravel
22'4"	bottom of boring

Installation

4" sch 40 PVC
2.5' screen length
5' sand pack
natural pack 15'3" to 7'
2' hole plug
Grout to surface

Qsource Drilling Log
Vapor Extraction Wells

Well # 3 Logged by G.Clyburn
Location 1287 Air City Drive
Dayton, Ohio
Date October 1988
Drill Co. John Mathes & Assoc.

Depths	Description
0'-1'	Black coal -banck material
2'-3'	Red clay fill material
5'	organic/sewer smell
22'	Sand and Gravel
22'6"	bottom of boring

Installation

4" sch 40 PVC
2.5' screen length
5' sand pack
2' hole plug
Grout to surface

Qsource Drilling Log
Vapor Extraction Wells

Well # 2 Logged by G.Clyburn
Location 1287 Air City Drive
Dayton, Ohio
Date October 1988
Drill Co. John Mathes & Assoc.

Depths	Description
0'-2'	Black clay balls (coal and silt)
2'-5'	Sand and Gravel
5'-16'	Gravel - with some sand and gravel
16'-22'	Fine Sand and small gravel, tan
22'	bottom of boring

Installation

4" sch 40 PVC
2.5' screen length
5' sand pack
1.5' hole plug
Grout to surface

Qsource Drilling Log
Vapor Extraction Wells

Well # 4 Logged by G.Clyburn
Location 1287 Air City Drive
Dayton, Ohio
Date October 1988
Drill Co. John Mathes & Assoc.

Depths	Description
1'-2'	Dark black Gravel
3'-10'	Gravel
10'-12'4"	Gravel and sand
20'	Gravel
22'	Gravel and Sand
22'	bottom of boring

Installation

4" sch 40 PVC
2.5' screen length
5' sand pack
1'4" hole plug
Grout to surface

EXHIBIT H

AQUIFER TEST DATA

PUMP TEST DATA

Location: Gem City Chemicals
Date: 2/21/90
Technition: T. Farrel/ G. Clyburn
Start Up Time: 096:15
Duration Time: 8 hours
Flow Rate: 340 gpm
Test Point: P1 - pizometer 3 feet from pumping well
Total Drop 0.75 ft.

TIME (MINUTES)	DEPTH (FEET)		t/r squared
	GC-P1		
0.0	28.62		0.00
0.5	NA		0.06
1.0	29.12		0.11
1.5	29.15	19.43	0.17
2.0	29.16	14.58	0.22
2.5	29.16	11.66	0.28
3.0	29.17	9.72	0.33
3.5	29.18	8.34	0.39
4.0	29.18	7.30	0.44
4.5	29.18	6.48	0.50
5.0	29.18	5.84	0.56
5.5	29.19	5.31	0.61
6.0	29.19	4.87	0.67
6.5	29.19	4.49	0.72
7.0	29.19	4.17	0.78
7.5	29.19	3.89	0.83
8.0	29.20	3.65	0.89
8.5	29.20	3.44	0.94
9.0	29.20	3.24	1.00
9.5	29.20	3.07	1.06
10.0	29.20	2.92	1.11
10.5	29.20	2.78	1.17
11.0	29.20	2.65	1.22
11.5	29.20	2.54	1.28
12.0	29.20	2.43	1.33
12.5	29.21	2.34	1.39
13.0	29.21	2.25	1.44
13.5	29.21	2.16	1.50
14.0	29.21	2.09	1.56
14.5	29.21	2.01	1.61
15.0	29.22	1.95	1.67
15.5	29.22	1.89	1.72
16.0	29.22	1.83	1.78
16.5	29.22	1.77	1.83
17.0	29.22	1.72	1.89
17.5	29.22	1.67	1.94
18.0	29.22	1.62	2.00
18.5	29.22	1.58	2.06
19.0	29.22	1.54	2.11

EXHIBIT I

19.5	29.22	1.50	2.17
20.0	29.22	1.46	2.22
20.5	29.22	1.43	2.28
21.0	29.22	1.39	2.33
21.5	29.22	1.36	2.39
22.0	29.21	1.33	2.44
22.5	29.21	1.30	2.50
23.0	29.21	1.27	2.56
23.5	29.20	1.24	2.61
24.0	29.20	1.22	2.67
24.5	29.20	1.19	2.72
25.0	29.23	1.17	2.78
25.5	29.23	1.15	2.83
26.0	29.23	1.12	2.89
26.5	29.23	1.10	2.94
27.0	29.23	1.08	3.00
27.5	29.23	1.06	3.06
28.0	29.23	1.04	3.11
28.5	29.23	1.03	3.17
29.0	29.23	1.01	3.22
29.5	29.24	0.99	3.28
30.0	29.24	0.97	3.33
30.5	29.24	0.96	3.39
31.0	29.24	0.94	3.44
31.5	29.24	0.93	3.50
32.0	29.24	0.91	3.56
32.5	29.24	0.90	3.61
33.0	29.24	0.89	3.67
33.5	29.24	0.87	3.72
34.0	29.24	0.86	3.78
34.5	29.24	0.85	3.83
35.0	29.25	0.84	3.89
35.5	29.25	0.82	3.94
40.0	29.26	0.73	4.44
45.0	29.27	0.65	5.00
50.0	29.27	0.59	5.56
55.0	29.28	0.53	6.11
60.0	29.28	0.49	6.67
65.0	29.29	0.45	7.22
70.0	29.29	0.42	7.78
75.0	29.29	0.39	8.33
80.0	29.30	0.37	8.89
85.0	29.30	0.34	9.44
90.0	29.30	0.33	10.00
95.0	29.31	0.31	10.56
100.0	29.31	0.29	11.11
105.0	29.31	0.28	11.67
110.0	29.31	0.27	12.22
115.0	29.32	0.25	12.78
120.0	29.32	0.24	13.33
135.0	29.33	0.22	15.00
150.0	29.34	0.20	16.67
165.0	29.34	0.18	18.33
180.0	29.34	0.16	20.00

EXHIBIT 1

195.0	29.34	0.15	21.67
210.0	29.34	0.14	23.33
225.0	29.34	0.13	25.00
240.0	29.34	0.12	26.67
255.0	29.35	0.12	28.33
270.0	29.35	0.11	30.00
285.0	29.35	0.10	31.67
300.0	29.36	0.10	33.33
315.0	29.36	0.09	35.00
330.0	29.36	0.09	36.67
345.0	29.37	0.09	38.33
360.0	29.37	0.08	40.00
375.0	29.37	0.08	41.67
390.0	29.37	0.08	43.33
405.0	29.37	0.07	45.00
520.0	29.37	0.06	57.78
435.0	29.37	0.07	48.33
450.0	29.37	0.07	50.00

Gem City Chi icals - Pump Test | G. Clyburn

$$S_w = \frac{Q}{4\pi(T)}[2 S_p]$$

$$\boxed{T = \frac{Q}{4\pi(S_w)}[2 S_p]}$$

S_w = drawdown (ft.) .75 ft

T = transmissivity

Q = Flow rate 340 gpm or 45.5 ft^3/min

h = saturated thickness of aquifer (ft.)

r_w = radius between pumping well + test well (ft.)

h' = length of screen (ft.)

$b = \frac{h'}{h}$ = penetration ratio

S_p = drawdown factor due to partial penetration

$$\frac{h}{r_w} = \frac{70 \text{ ft}}{3.5 \text{ ft}} = 20$$

$$b = \frac{h'}{h} = \frac{(20')}{(70')} = .29 \cong .3$$

S_p (from graph) = 3.8

$$T(ft^2/min) = \frac{45.5 \text{ ft}^3/\text{min}}{4\pi\ (.75 \text{ ft})}[2(3.8)]$$

$T(ft^2/min)$ = 36.7 ft^2/min or 52,848 ft^2/day

or 395,356 gpd/ft

Gem City Chem. | Pump Test | G Clyburn

$\boxed{T = K b}$

$\boxed{K = T / b}$

T = transmissivity 52,848 ft²/day

K = conductivity

b_1 = saturated thickness of aquifer effected 70 ft

$$K = \frac{52,848 \text{ ft}^2/\text{day}}{70 \text{ ft}}$$

K = 754.97 ft/day ≅ 755 ft/day

or .1049"/sec

or .266 cm/sec

EXHIBIT J

VOC REMOVAL CALCULATIONS

REMOVAL EFFICIENCY OF THE RECOVERY WELL

The removal of volatile organic compounds by the recovery well and air stripper system is estimated by the difference between the VOC content of groundwater at the site and the concentration in the effluent, times the amount of water pumped from the ground during the time the well system has been operating. The calculations, and the assumptions behind these calculations are listed below.

1) **QUANTITY OF WATER PUMPED** - Estimated as the average pumping rate times the duration of pumping

Average pumping rate = 300 gallons/minute
Duration of pumping = 2.75 years (Nov. 1989 - July 1992)

Volume of pumped water = 300 gpm * 1440 min/day * 365 days/year * 2.75 years

Volume of pumped water = 433,620,000 gallons pumped

Weight of water pumped = volume pumped * 8.34 pounds/gallon

Weight of water pumped = 3,616,390,800 pounds

2) **CONCENTRATION OF PRODUCT IN GROUNDWATER**

Limited monitoring of the influent water to the recovery well has been done. In order to calculate the amount of product removal, a range of alternative estimates, based on data from the monitoring wells has been used.

- A MINIMUM CONCENTRATION is based on the sum of the visual estimates of the average values of the seven Volatile Organic Compounds with permitted discharge limits, for which tests are being conducted in water samples from the monitor wells. This may be too low, due to the presence of small amounts of other VOC's. For computational purposes, this is estimated at 0.5 parts per million.

- A MAXIMUM CONCENTRATION value is based on the highest reading for VOC's in any monitor well, prior to the operation of the recovery well system. The value used for computational purposes is 2.0 parts per million. This value was also used for the groundwater flow model, computed earlier. The value is probably too high, as it is based on a maximum concentration, not on average values.

- AN AVERAGE CONCENTRATION value is estimated as 1.0 part per million, chosen as a mid-range between the maximum and minimum values.

3) CONCENTRATION OF PRODUCT IN STRIPPER TOWER EFFLUENT

The air stripper system has been successful in removing over 98% of the volatile organic compounds from the pumped groundwater. The concentration of volatiles in the stripper tower effluent has consistently been below 10 parts per billion (0.010 ppm), or only 0.5 to 2% of the estimated concentration of volatiles in the groundwater. Therefore, since other values in this analysis have much greater uncertainties, this value is assumed to be zero, for computational purposes.

4) WEIGHT OF PRODUCT REMOVED

The weight of product removed is computed by multiplying the estimated concentration in the groundwater by the weight of groundwater removed.

GROUNDWATER. VOC CONCENTRATION	WEIGHT OF GROUNDWATER PUMPED	WEIGHT OF PRODUCT REMOVED
2.0 ppm	3,616,390,000 lb.	7,230 lb
1.0 ppm	3,616,390,000 lb.	3,620 lb
0.5 ppm	3,616,390,000 lb.	1,810 lb.

EXHIBIT M

TEST BORING LOGS, AS-BUILT DIAGRAMS AND POTENTIOMETRIC DATA

QSOURCE ENVIRONMENTAL SERVICES, INC.

SUBSURFACE EXPLORATION LOG

PIT OR BORING # SB-1
PAGE 1 OF 1

PROJECT Gem City Chemicals, Inc. PROJECT # 193004

GENERAL SITE LOCATION 1287 Air City Avenue

STATE Ohio COUNTY Montgomery CITY/TWP Dayton SEC

LOCATION ON THE SITE SW corner of site, 90' E of west fence, 38' N of SW corner of fence

METHOD(S) 4 1/4" HSA RIG CME-75 HOLE DIA. 9 " SAMPLER & SIZE 2"x24" Split Spoon

DRILLING CO. Moody's of Dayton DRILLERS P. Ridder, J. D. Hobbs LOGGED BY J. Michael Clinch

DATE STARTED 1/12/93 DATE FINISHED 1/12/93

_ BORING COMPLETED AS A _____ OR X BACKFILLED DATE 1/12/93 MATERIAL cement, 5% bentonite

DEPTH TO WATER: Encountered at N. E. ', At completion N. A. ', After N. A. Hrs. water was at N. A.'

DEPTH	SAMPLE INFORMATION #	TYPE	FROM / TO	REC	BLOW CT ADV RATE	ELEV.	MATERIAL / DRILLING AND OTHER NOTES
							surface: Grass and weeds, gravel and coal visible
0							
1	1	SS	0'-2'	1.5'	4, 5, 7, 6		SILT, some medium to fine sand, little gravel, coal fragments, 2.5 Y 3/2, moist PID = 0
3	2	SS	2'-4'	0.8'	4, 6, 8, 10		SILT, little fine to medium sand, trace clay (stone in tip) 7.5 YR 4/6, moist PID = 0.7 -SAMPLED FOR VOCs (rig chatter, 3' to 4')
5	3	SS	4'-6'	1.4'	9, 17, 13, 20		SAND, medium to coarse, some gravel to 1/2", little fine sand, little silt 5 Y 5/4, moist, PID = 0
7	4	SS	6'-8'	1.7'	35, 32, 41, 35		SAND, coarse, some pebbles and broken fragments trace silt, trace fine to medium sand 2.5 Y 5/4 (silt color) dry to moist, PID = 0
9	5	SS	8'-10'	1.5'	25, 19, 13, 16		SAND, coarse to medium, some pebbles to 1", trace silt, trace fine to medium sand 2.5 Y 5/4 (silt color) dry, PID = 0
10							END OF BORING AT 10'

2490 Technical Drive · Miamisburg, Ohio 45343 · (513) 866-1711 · (800) 356-9039 · FAX (513) 866-7473

QSOURCE ENVIRONMENTAL SERVICES, INC.

SUBSURFACE EXPLORATION LOG

PIT OR BORING # SB-2

PAGE 1 OF 1

PROJECT Gem City Chemicals, Inc. PROJECT # I93004

GENERAL SITE LOCATION 1287 Air City Avenue

STATE Ohio COUNTY Montgomery CITY/TWP Dayton SEC

LOCATION ON THE SITE NW corner of site, 70' E of west fence, 90' south of north fence

METHOD(S) 4 1/4" HSA RIG CME-75 HOLE DIA. 9 " SAMPLER & SIZE 2"x24" Split Spoon

DRILLING CO. Moody's of Dayton DRILLERS P. Ridder, J. D. Hobbs LOGGED BY J. Michael Clinch

DATE STARTED 1/12/93 DATE FINISHED 1/12/93

_ BORING COMPLETED AS A _____ OR X BACKFILLED DATE 1/12/93 MATERIAL cement, 5% bentonite

DEPTH TO WATER: Encountered at N. E. ', At completion N. A. ', After N. A. Hrs. water was at N. A.'

DEPTH	SAMPLE INFORMATION #	TYPE	FROM / TO	REC	BLOW CT ADV RATE	ELEV.	MATERIAL / DRILLING AND OTHER NOTES
							surface: Grass and weeds, coal fragments, gravel
0							
1	1	SS	0' - 2'	1.35	4, 6, 7, 8		SILT and SAND, fine, trace clay, coal fragments 10 YR 4/4, moist, PID = 3.5 SAMPLED FOR VOCs
2							
3	2	SS	2' - 4'	1.2'	5, 6, 9, 11		0.2 Same as above, PID = 1.5 1.0 GRAVEL and SAND, medium to coarse trace silt, moist, 2.5 Y 7/4
4							
5	3	SS	4' - 6'	1.2'	10, 15, 15, 18		SAND, medium to fine, some pebbles to 1", trace silt, dry to moist, 2.5 Y 7/4, PID = 0 (Pebbles to 2" diameter in auger flights)
6							
7	4	SS	6' - 8'	1.4'	20, 31, 29, 27		SAME AS ABOVE, PID = 0
8							
9	5	SS	8' - 10'	1.5'	21, 28, 24, 25		SAME AS ABOVE, PID = 0
10							END OF BORING AT 10'

2490 Technical Drive · Miamisburg, Ohio 45343 · (513) 866-1711 · (800) 356-9039 · FAX (513) 866-7473

QSOURCE ENVIRONMENTAL SERVICES, INC.

SUBSURFACE EXPLORATION LOG

PIT OR BORING # SB-3
PAGE 1 OF 1

PROJECT Gem City Chemicals, Inc. PROJECT # 193004

GENERAL SITE LOCATION 1287 Air City Avenue

STATE Ohio COUNTY Montgomery CITY/TWP Dayton SEC

LOCATION ON THE SITE 180' E of western fence, 100' S of northern fence, unused western parcel

METHOD(S) 4 1/4" HSA RIG CME-75 HOLE DIA. 9 " SAMPLER & SIZE 2"x24" Split Spoon

DRILLING CO. Moody's of Dayton DRILLERS P. Ridder, J. D. Hobbs LOGGED BY J. Michael Clinch

DATE STARTED 1/12/93 DATE FINISHED 1/12/93

_ BORING COMPLETED AS A _____ OR X BACKFILLED DATE 1/12/93 MATERIAL cement, 5% bentonite

DEPTH TO WATER: Encountered at N. E. ', At completion N. A. ', After N. A. Hrs. water was at N. A.'

DEPTH	SAMPLE INFORMATION #	TYPE	FROM / TO	REC	BLOW CT ADV RATE	ELEV.	MATERIAL / DRILLING AND OTHER NOTES
							surface: Grass, weeds, coal fragments
0							----------
				N.R.	12 6		(No recovery - redrove split spoon)
1	1	SS	0' - 2'	1.0	10 5		6" coal fragments
					6 6		6" SILT and SAND, fine to medium, little pebble
2					9 9		moist, 7.5 YR 3/2, PID = 0
					10		7" SAME AS ABOVE, SAMPLED FOR VOCs
3	2	SS	2' - 4'	1.3'	12		8" SAND, fine to medium, some pebbles (to 1")
					12		little coarse sand and granules, trace silt
4					15		dry, 2.5 Y 6/6 PID = 0
					8		PEBBLES (to 1") and SAND, medium to coarse,
5	3	SS	4' - 6'	1.3'	12		little fine sand, little very coarse sand
					13		trace silt, dry, 5 Y 7/4, PID = 0
6					15		
					12		SAME AS ABOVE, PID = 0
7	4	SS	6' - 8'	1.4'	22		(pebbles to 3" in auger flights)
					27		
8					26		
					17		SAME AS ABOVE, PID = 0
9	5	SS	8' - 10'	1.0'	30		
					52		
10					15		END OF BORING AT 10'

2490 Technical Drive · Miamisburg, Ohio 45343 · (513) 866-1711 · (800) 356-9039 · FAX (513) 866-7473

HOK/K

August 16, 1996

Ms. Diana Partin
Industrial Fiberglass Specialties, Inc.
6060 Milo Road
Dayton, OH 45414

Mr. Gary Wilhelm
Huntington National Bank
Courthouse Plaza Southwest Suite 200
Dayton, OH 45402

Re: Documentation of Site Inspection and Asbestos Inspection
Former Rich Products Facility (a.k.a., Bluebird Bakery Building)
521 Kiser Street
Dayton, OH 45404
Job # H96096

Dear Ms. Partin and Mr. Wilhelm:

As requested in your letter of August 8, 1996, HOK/K has completed a limited inspection of the former Bluebird Bakery Building referenced above. This inspection was limited to the specific items from Mr. Bill Hinger's checklist (#4a, Site Inspection, excepting inspections of adjacent properties; #4b, Asbestos Inspection; #5, Agency Contact, limited to interview with Fire Department and Health Department; and #9 Resumes). The results of our inspection are documented below.

(4a) Site Inspection

On August 9, 1996, Ms. Cindy Vanderhorst and Mr. Nick Dionne of HOK/K performed the site inspection and asbestos inspection. The site is currently inactive and most of the original equipment has been removed. Based on the previous report by URS Consultants (dated April 1995 and supplied by Ms. Partin), the following issues were identified:

- Oil-contaminated soil was noted between the DP&L transformer and the west fence.
- Unlabeled drums of oily material were left on-site.

2490 Technical Drive • P.O. Box 3004 Miamisburg, Ohio 45343 3004
Telephone: 513 866 4211 and 800 356 9039 • Fax: 513 866 7893 and 513 866 7473

There was no evidence of oil-stained soil around the transformer. The current transformer is labeled with a blue octagon sticker that indicates "non-PCB" status. A former maintenance person indicated to Ms. Partin that the oil staining was not the result of a transformer leak, but was from intentional dumping of used oil for weed control in this area. According to Ms. Partin, the stained soil was excavated and disposed. The disposition of the stained soil is not known and there was no confirmation testing of the soils performed.

The unlabeled drums that were on the west side of the building have been removed. The disposition of these drums is not known. One plastic tub (approximately fifteen gallons) of waste oil and one gear oil drum (approximately 30 gallons) remain on-site. Minor staining on concrete areas was noted. These materials should be properly disposed.

Based on a site inspection of the remaining portions of the property and a review of the URS report, HOK/K has the following recommendation:

URS identified a former water supply well located under a metal cover in the Receiving Department. URS indicated that this well was out of service and was not an environmental concern. No additional information regarding this well was obtained during the HOK/K site inspection.

HOK/K reviewed available public documents regarding water wells in this area. Two wells have been registered at this site. One well (numbered #205) was drilled to 270 feet and had a 12 inch casing. This well was on-site since in 1957 (date of installation is not listed). The second well (#29) was installed in 1961. This well is 91 feet deep with 6" casing. Neither wells have a record of proper abandonment on file with the Ohio Department of Natural Resources. If these wells are still on-site, the current condition should be assessed and if the wells are out of service, they should be properly abandoned.

(#4b) Asbestos Inspection

The Huntington Bank checklist requires an AHERA asbestos containing materials (ACM) inspection for any site built before 1990. Interpretations of the Huntington Bank Policy by Mr. Bill Hinger, indicate the following clarifications. This inspection requires samples of suspect ACM if 1) the building is being demolished, severely renovated or if the suspect ACM is to be disturbed, 2) the suspect ACM is friable and damaged or 3) if the suspect ACM is removable ceiling material (i.e., ceiling tile) which is friable (in good condition or damaged). This inspection must be performed by a State of Ohio Certified Asbestos Hazard Specialist.

On August 9, 1996, Ms. Cindy Vanderhorst (credentials are included at Attachment 1), performed an inspection of the property. As shown on the laboratory analysis (Attachment 2), ten samples of suspect ACM were analyzed. No floor tiles were sampled as these materials were in a non-friable condition. A summary table of the data is presented below.

Sample Number	Sample Type	Sample Results (NAD = No asbestos detected)	Comment
IF-1	Ceiling Tile	NAD	Photo 1 (See Attachment 2)
IF-2	Ceiling Tile	NAD	Photo 2
IF-3	Dropped Ceiling Tile	NAD	Photo 3
IF-4	Dropped Ceiling Tile	NAD	Photo 4
IF-5	Thermal Pipe Insulation	25% Chrysotile	Photo 5
IF-6	Thermal Pipe Insulation (Mudded Elbow)	65% Chrysotile	Photo 6
IF-7	Surfacing Material (Ceiling)	3% Chrysotile	Photo 7
IF-8	Insulation above IF-7	NAD	Photo 7
IF-9	Ceiling Material	NAD	Photo 8
IF-10	Thermal Pipe Insulation	45% Amosite	Photo 9

In summary, the samples of Thermal Pipe Insulation (#IF-5, #IF-6, and #IF-10) contained asbestos. Samples IF-6 was the most severely damaged insulation noted. The ceiling material (#IF-7) was also in friable condition.

OSHA has recently enacted changes to its regulations regarding asbestos in buildings. These regulations owners of buildings constructed prior to January 1, 1981 to:

(1) Notify tenants and employees of the existence and location of ACM and PACM. This notification extends to all contractors and subcontractors (including maintenance and custodial activities) who may work in areas with ACM or PACM.
(2) Prepare an Operations and Maintenance (O&M) Plan for future activities related to ACM or PACM.
(3) Provide appropriate training for the level of anticipated involvement with ACM or PACM.

Based on the analysis performed, the owner of the facility has the option of removing all ACM or encapsulating it and implementing an O&M Plan.

#5 Agency Contact

Montgomery County Combined Health District - A letter to Mr. Mark Case with the Health Department was sent on August 8, 1996 (See Attachment 3). Several calls to his office have not been returned. Upon receipt of any significant information, HOK/K will forward it to the client.

Dayton Fire Department - Mr. Harold Embry with the Dayton Fire Department was contacted by mail and telephone (See Attachment 4). Mr. Embry was interviewed on August 12, 1996 and indicated the following:

- Two 4,000 gallon underground storage tanks installed in 1955 were registered with City of Dayton for this site.

- A copy of the State Fire Marshal (BUSTR) permit for removal of six USTs (dated January 14, 1991) was on file. The removal contractor was WRP Associates of Lebanon, Ohio. An inspection form from the Fire Inspector indicated that the six tanks were removed on February 12, 1991.

  (Editorial Note - The URS report indicated that this site has received a "No Further Action" Letter from BUSTR. This letter, dated November 9, 1994, was included as Appendix C in the URS report. HOK/K has not reviewed this letter and does not know if the six tanks removed by WRP Associates included the two 4,000 gallon tanks identified by Mr. Embry.)

- Mr. Embry had no reports of spills or emergency calls to this site. There is a permit on file for the fire sprinkling system.

#9 Resumes

The resumes for the project manager, ACM inspector and site inspector, are included as Attachment 1.

If you have any questions, please do not hesitate to call me.

Sincerely,

HOK/K Industrial, Inc.

John W. Ey, P.E., REPA
Manager
Environmental Assessments

JWE:skb

2490 Technical Drive • P.O. Box 3004 Miamisburg, Ohio 45343 3004
Telephone: 513 866 4211 and 800 356 9039 • Fax: 513 866 7893 and 513 866 7473

HOK/K

STAFF PERSONNEL
QUALIFICATIONS RESUME

JOHN W. EY, P.E.

MANAGER, ENVIRONMENTAL ASSESSMENTS

Education

Bachelor of Mechanical Engineering. Vanderbilt University (1979)

MBA - Finance, University of Cincinnati (1988)

Registration

Registered Professional Engineer, Ohio, 1989
Registered Professional Engineer, Louisiana, 1986
Registered Environmental Property Assessor (REPA), 1994
Certified Professional - Ohio EPA Voluntary Action Program (Brownfields), 1994

Qualifications

Mr. Ey is currently the Manager of Environmental Assessments. Mr. Ey has performed over one hundred environmental site assessments throughout Ohio and other midwest states. He has also performed regulatory compliance audits in several large industrial facilities throughout the U.S.

Mr. Ey's former assignment at HOK/K was in the area of underground storage tanks (USTs). His responsibilities included the evaluation of tank systems, oversight of tank integrity testing, removal of underground storage tank systems, testing of soils and groundwater, coordination of remedial action plans with state and regulatory officials and writing of closure plan documents. He has prepared reports in compliance with BUSTR, USEPA and OEPA regulations. After receiving his MBA in 1988, he managed a construction company specializing in installation of UST systems for various petroleum products retailers.

Mr. Ey is a Professional Engineer with seventeen years of experience in a variety of industrial settings. His broad experience began with a major oil company where he had assignments in both refining and production. He developed specific experience in engineering design, plant operations and regulatory liaison. In his regulatory position, he was responsible for commenting on proposed EPA and OSHA regulations, interpreting the promulgated rules, and implementing them for oil and gas operations over a six state area. He coordinated annual NPDES reporting to USEPA for over 100 offshore drilling locations.

Qualifications (cont'd)

In addition, he has a working knowledge of a wide range of environmental regulations associated with the CWA, CERCLA, RCRA, OSHA and SARA.

Relevant Experience

Environmental Site Assessments and Audits

Performed over 100 environmental site assessments throughout Ohio and the midwest. These assessments are used to establish the innocent landowner defense under CERCLA. Mr. Ey has a working relationship with various lending institutions and developers.

Participated in environmental compliance audits of several industrial facilities throughout the U.S. These audits are typically performed for the legal counsel of the potential purchaser of the properties.

Underground Storage Tanks

Provided project management expertise for removal of over 100 underground storage tanks in northwest and southwest Ohio. These closures were prepared in accordance with BUSTR, USEPA and OEPA regulations.

Managed a construction company specializing in installation of underground storage tank systems for various petroleum products retailers.

Regulatory Engineering

Served on oil industry associations and worked with various state and federal regulatory agencies to influence development of new regulations.

Developed company positions regarding proposed regulations and submitted comments to the various agencies.

Interpreted new regulations (USCG, OSHA, COE, EPA and agencies over a six state area) and developed compliance procedures for company use.

Coordinated annual environmental (NPDES) reporting to USEPA for over 100 offshore production and drilling platforms.

Drilling Engineering

Designed drilling plans for fifteen oil and gas wells varying in depth from 5,000 feet to over 15,000 feet in Southeastern United States. This work included selection of appropriate drilling techniques, design of casing and selection of casing points, and testing of productive wells.

Relevant Experience (cont'd)

Refinery Engineering

Monitored refinery energy performance and presented monthly reports to upper management. Developed annual energy use forecasts.

Provided engineering support for mechanical equipment and was responsible for product quality.

Provided engineering support for major unit renovations (turnarounds).

Employment History

1989 - Present	HOK/K INDUSTRIAL Miamisburg, Ohio Manager, Environmental Assessments
1988 - 1989	COURTESY PETROLEUM MAINTENANCE Beavercreek, Ohio Vice President
1979 - 1987	EXXON COMPANY, U.S.A. Baton Rouge and New Orleans, Louisiana Refinery Engineer and Drilling Engineer

HOK/K

STAFF PERSONNEL
QUALIFICATIONS RESUME

CYNTHIA C. VANDERHORST

PROJECT GEOLOGIST

Education

Bachelor of Science, University of Dayton (1982)

Qualifications

Ms. Vanderhorst is a Geologist with specific experience in performing Phase I Environmental Site Assessments, Phase II Site Investigations, building surveys for asbestos and lead hazards, monitoring asbestos abatement, and monitoring UST removals and contaminated soil remediation.

Relevant Experience

Site Assessments and Investigations

Ms. Vanderhorst has performed numerous Phase I Environmental Site Assessments and Phase II Site Investigations. Investigations have included industrial, commercial and undeveloped property.

Asbestos

Ms. Vanderhorst has conducted numerous building inspections according to AHERA regulations for industrial, commercial and public sector (school) properties. She is familiar with survey and assessment protocol including bulk material sampling, drawing preparation, hazard assessments and preparation of inspection reports. She has also conducted compliance monitoring during abatement activities, on site inspections and air monitoring and air sample analysis (PCM).

Environmental

She has considerable experience in building surveys for radon, lead paint surveys, soil index testing, monitoring underground storage tank removals and contaminated soil remediation, monitoring geotech borings, well installation, well development and water sampling. She has also served as the Health & Safety Officer at hazardous waste sites.

Professional Credentials and Affiliations

Asbestos Hazard Evaluation Specialist, State of Ohio (since 1988)
"Sampling and Evaluating Airborne Asbestos Dust", NIOSH (#582)
Building Inspection/Management Planning Training Course, the Environmental Institute
OSHA 40-Hour Hazardous Waste Site Worker Training
OSHA 8-Hour Site Supervisor Training
National Groundwater Association
"Lead Abatement Training for Supervisors and Contractors" (1993)
"Lead Inspector Training" (1995)
"Lead Exposure Risk Assessment Course" (1995)
Certified Lead Risk Assessor (since 1995, Ohio)

Employment History

1990 - Present	HOK/K INDUSTRIAL Miamisburg, Ohio Project Geologist
1988 - 1990	ATEC ASSOCIATES, INC. Dayton, Ohio Geologist/Industrial Hygienist
1986 - 1988	BOWSER-MORNER, INC. Dayton, Ohio Soils Lab Supervisor

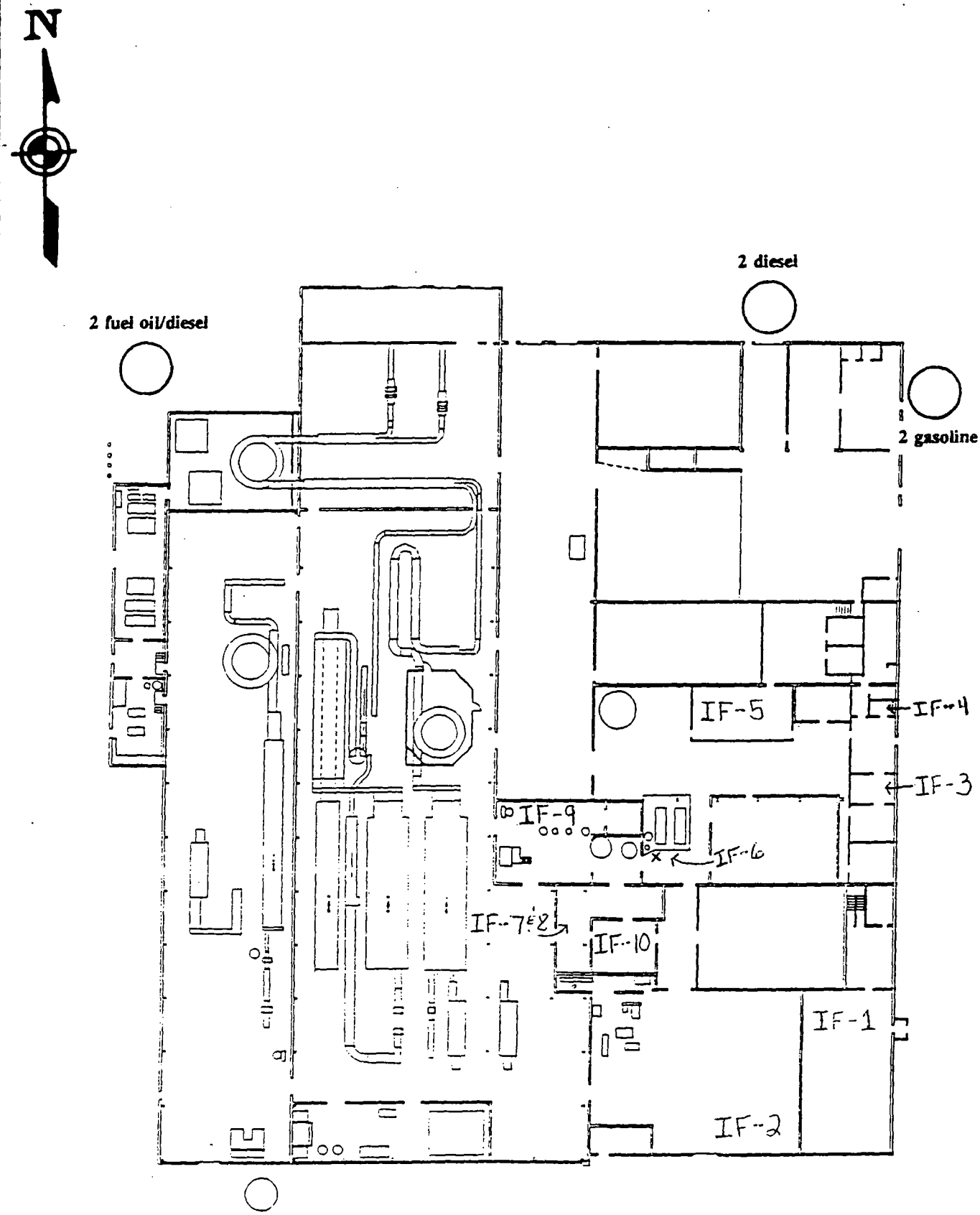

NOT TO SCALE

URS CONSULTANTS, INC.

SITE LAYOUT
WITH LOCATIONS OF REMOVED TANKS
RICH PRODUCTS, DAYTON, OHIO

FIGURE 3

A-7860

CHRYSLER CORPORATION

Chain-of-Custody

01503 A

Comm:Chem 501 Madison Avenue Cary, NC 27513 Phone Number: 1-800-833-5097 Fax Number: (919) 379-4050	Project Name: Dayton Thermal Products Site Location: 400 West 1st, Dayton OH 45401 Site Code: 5C001 RFA Number: YGOP9800251 and 252 Chrysler PM: Gary Stawczyk	Consultant: Leggette, Brashears & Graham, Inc. Address: 1310 West County Road E St. Paul MN 55112 Consultant PM: Ken Vogel Phone: 651 490-1405 Fax: 651 490-1006

Turn-around Time Request:
- 24 calendar hrs.
- 48 calendar hrs.
- 7 days
- 28 days

Data Package Deliverables: (circle)
- Chrysler Level 1
- Chrysler Level 2
- Other (specify):

Compound List-Parameter/Method/Bottle Type/Preservative

Matrix Codes
S - Soil; SW - Surface Water; GW - Groundwater; A - Air; Sed. - Sediment; O - Other (specify) Sump Liquid, Rinse water

Field Sample Identification	Date Collected	Time Collected	Grab (G) or Composite (C)	Matrix Code	Total # of Containers	Ch.7 Reactivity Aqueous	Ch.7 Reactivity Solid	Volatiles pH <2	Metals pH < 2	Cyanide pH > 12	Other	Remarks
WS00001	12-9-98	11:00	C	S			X					Solid waste
WL00001	↓	12:00	G	O		X						Sump Liquid
WL00002		12:50	G	O		X						Rinse Water

See C-O-C 1502 for additional analyses.

Sampler(s)	Bottles Relinquished under Airbill No.			Samples Relinquished under Airbill No.			Temperature (corrected) ___ C
Cindy Vanderhorst LJB	Relinquished by: [illegible]	Date: 12-9-98	Time: 1630	Received by:	Date:	Time:	Custody Seal Intact? Yes No
Cooler ID # 48+24	Relinquished by:	Date:	Time:	Received by:	Date:	Time:	Custody Seal Intact? Yes No
Is RFA sampling complete? Yes No	Relinquished by:	Date:	Time:	Received for Laboratory by:	Date:	Time:	Custody Seal Intact? Yes No

Chrysler Corporation 800 Chrysler Drive, CIMS 482-00-51, Auburn Hills, Michigan 48326-2757

Distribution: White copy: Data package Yellow : Retained by laboratory Pink: Retained by sampler

Revision No. 1
Created: September 23, 1997

Page ___ of ___

CHRYSLER CORPORATION

Chain-of-Custody

01502 A

CompuChem
501 Madison Avenue
Cary, NC 27513
Phone Number: 1-800-433-5097
Fax Number: (919) 379-4050

Project Name: Dayton Thermal Products
Site Location: 1600 Webster St. Dayton OH 45401
Site Code: SC001
RFA Number: 4600980025I and 252
Chrysler PM: Gary Stanczak

Consultant: Leggette, Brashears & Graham, Inc
Address: 1180 West Cardy Road E Suite 300
Saint Paul MN 55112
Consultant PM: Ken Vandel
Phone: 651 490 1405 Fax: 651 490-1606

Turn-around Time Request: 24 calendar hrs. / 48 calendar hrs. / 7 calendar hrs. / 28 days

Data Package Deliverables: (circle) Chrysler Level 1 / Chrysler Level 2 / Other (specify):

Matrix Codes: S - Soil; SW - Surface Water; GW - Groundwater; A - Air; Sed. - Sediment; O - Other (specify) Sump liquid, Rinse water

Field Sample Identification	Date Collected	Time Collected	Grab (G) or Composite (C)	Matrix Code	Total # of Containers	8260 VOCs	8270A SVOCs	RCRA Metals 6/7000	TCLP Metals 6/7000	8080 PCBs	9030A TOH Aqueous	9030A TOH Solid	Ch.7 Corrosivity	Ch.7 Ignitability	Volatiles pH < 2	Metals pH < 2	Cyanide pH > 12	Other ___	Remarks
WS00001	10-7-97	11:[illegible]	C	S	6	X	X	X	X	X		X	X	X					Solid Waste
WL00001	↓	12:[illegible]	G	O	12	X	X	X		X	X		X	X					Sump Liquid
WL00002	↓	12:[illegible]	G	O	12	X	X	X		X	X		X	X					Rinse water
T093098			—	O		X													Trip blank
See C-O-C 1503 for additional analysis.																			

Sampler(s) Craig Vandehorst LJB

Cooler ID # [illegible]

Is RFA sampling complete? Yes / No

Bottles Relinquished under Airbill No.	Date:	Time:	Samples Relinquished under Airbill No.	Date:	Time:	Temperature (corrected) ___ C
Relinquished by: [illegible]	[illegible]	[illegible]	Received by:			Custody Seal Intact? Yes No
Relinquished by:			Received by:			Custody Seal Intact? Yes No
Relinquished by:			Received for Laboratory by:			Custody Seal Intact? Yes No

Chrysler Corporation 800 Chrysler Drive, CIMS 482-00-51, Auburn Hills, Michigan 48326-2757

Distribution: White copy: Data package Yellow : Retained by laboratory Pink: Retained by sampler

Revision No 1
Created. September 23, 1997

Page ___ of ___

LJB GROUP, INC.

FAX COVER LETTER

Pages: 3 Total number of page(s) transmitted including this page

PHONE: 513-259-5000
FAX NUMBER: 513-259-5100

To: Kristin Yahnke

Fax Number: 651 490 1006

From: C. Vanderhorst Phone: 937-259-5753

Date: 10-2-98 Time:

Comments/Instruction:

2 COC's

1100 Research Boulevard
P.O. Box 20246
Dayton, Ohio 45420-0246

Comfort Inn

Comfort Inn of Dayton
7126 Miller Lane
Dayton, OH 45414
(937) 890-0005

TO: Ken Vogel

FAX NUMBER: (651) 490-1006

No. OF PAGES INCLUDING COVER: 6

FROM: Mike Plante

ROOM No. 226

If you do not receive all pages please contact me at the above number.

COMMENTS: C.O.C.'s of shipment sent out the evening of 4/22/99.

CHRYSLER CORPORATION — Offsite Geoprobe Investigation — **Chain-of-Custody** — 04852 A

CompuChem: Kewaunee	Project Name: Dayton Thermal Products	Consultant: LBG	
501 Madison Avenue	Site Location: 1600 Wolfe St. Dayton OH	Address: 1210 West Cesar Ed. E. Suite 72	
Cary, NC 27513	Site Code: SCCC1	St Paul MN 55112	
Phone Number: 1-800-833-5097	RFA Number: YGGP99CC221	Consultant PM: Ken Kerol	
Fax Number: (919) 379-4050	Chrysler PM: Greg Stracczuk	Phone: (651) 490-1400	Fax: (651) 490-1006

Turn-around Time Request:
- 24 calendar hrs.
- 48 calendar hrs.
- 10 days
- 28 days

Data Package Deliverables: (circle)
- Chrysler Level 1
- Chrysler Level 2
- Other (specify):

Compound List Parameter/Method/Bottle Type/Preservative

Matrix Codes
- S - Soil
- SW - Surface Water
- GW - Groundwater
- A - Air
- Sed. - Sediment
- O - Other (specify)

Field Sample Identification	Date Collected	Time Collected	Grab (G) or Composite (C)	Matrix Code	Total # of Containers	4 oz glass 7CL VOC #260								Volatiles pH <2	Metals pH <2	Cyanide pH >12	Other	Remarks
DP-31 4-8'	4/22/09	13:05	G	S	1	X												
DP-32 12-16'	↓	12:45	↓	↓	1	X												
DP-33 0-4'	↓	15:35	↓	↓	1	X												
DP-34 4-8'	↓	14:30	↓	↓	3	X												MS/MSD

Lab Use Only

Sampler(s): Dave Strand, Mike Plante, Dave Olson, Chris Hohlman

Bottles Relinquished under Airbill No. 4287 4960 6454

Samples Relinquished under Airbill No. [illegible]

Temperature (corrected) ___ C

Relinquished by:	Date:	Time:	Received by:	Date:	Time:	Custody Seal Intact?
[signature]	4/22/09	18:00				Yes No
						Yes No
			Received for Laboratory by:			Yes No

Chrysler Corporation Bill Service Form [illegible]

Contact [illegible] Data Package [illegible] Instructions [illegible] Time Required [illegible]

CHRYSLER CORPORATION

Offsite Complete Investigation

Chain-of-Custody

046651 A

CompuChem Kenwood 501 Madison Avenue Cary, NC 27513 Phone Number: 1-800-833-5097 Fax Number: (919) 379-4050	Project Name: Dayton Thermal Products Site Location: Dayton Ohio, 1600 Webster St Site Code: SC081 RFA Number: YCGP9900221 Chrysler PM: Carl Stanczuk	Consultant: LBG Address: 1210 West County Rd E St. Paul MN 55112 Consultant PM: Ken Vogel Phone: (651) 490-1405 Fax: (651) 490-1006	

Turn-around Time Request:	Data Package Deliverables: (circle)
24 calendar hrs.	Chrysler Level 1
48 calendar hrs.	Chrysler Level 2
10 days	Other (specify):
28 days	

Compound List-Parameter/Method/Bottle Type/Preservative: 40 ml, glass, HCL TCL VOC 8260

Matrix Codes: S - Soil; SW - Surface Water; GW - Groundwater; A - Air; Sed. - Sediment; O - Other (specify)

Field Sample Identification	Date Collected	Time Collected	Grab (G) or Composite (C)	Matrix Code	Total # of Containers	40 ml, glass, HCL TCL VOC 8260	Lab Use Only: Volatiles pH <2	Metals pH <2	Cyanide pH > 12	Other	Remarks
DP-32 19-21'	4/22/99	13:10	G	GW	2	X					
DP-31 20-22'	↓	14:25	↓	↓	2	X					
DP-31 35-37'	↓	14:55	↓	↓	2	X					
DP-32 33-35'	↓	13:30	↓	↓	2	X					
DP-33 19-21'	↓	16:40	↓	↓	2	X					
DP-33 38-40'	↓	17:00	↓	↓	2	X					
DP-34 21-23'	↓	15:10	↓	↓	2	X					
DP-34 38-40'	↓	16:20	↓	↓	2	X					

Sampler(s)	Bottles Relinquished under Airbill No. 4237 4960 6969			Samples Relinquished under Airbill No. 810581592362			Temperature (corrected): ___ C
Dave Strand Mike Florke Dave Chen Mike Holman	Relinquished by:	Date: 4/22/00	Time: 18:00	Received by:	Date:	Time:	Custody Seal Intact? Yes No
Date 2nd ___ 196	Relinquished by:	Date:	Time:	Received by:	Date:	Time:	Custody Seal Intact? Yes No
Is RFA sampling complete? Yes No	Relinquished by:	Date:	Time:	Received for Laboratory by:	Date:	Time:	Custody Seal Intact? Yes No

Chrysler Corporation, 800 Chrysler Drive, CIMS 482-00-01, Auburn Hills, Michigan 48326-2757

Distribution: White - Original; Yellow - Laboratory; Pink - Consultant; Gold - Laboratory to receive

CHRYSLER CORPORATION — Offsite Groundwater Investigation — **Chain-of-Custody** — 01664 A

CompuChem Kenmore 501 Madison Avenue Cary, NC 27513 Phone Number: 1-800-833-5097 Fax Number: (919) 379-4050	Project Name: Dayton Thermal Products Site Location: 1400 Wilmington St. Dayton OH Site Code: SC001 RFA Number: VAG 099000321 Chrysler PM: Gary Stanaitis	Consultant: IPG Address: 1310 West County Road E St Paul MN 55112 Consultant PM: Kevin Vogel Phone: 651 490 1625 Fax: 1006	

Turn-around Time Request: 24 calendar hrs. / 48 calendar hrs. / 10 days / 28 days

Data Package Deliverables: (circle) Chrysler Level 1 / Chrysler Level 2 / Other (specify)

Compound List-Parameter/Method/Bottle Type/Preservative: 4 oz glass no preservative — TCL VOC 8260

Matrix Codes: S - Soil; SW - Surface Water; GW - Groundwater; A - Air; Sed - Sediment; O - Other (specify)

Field Sample Identification	Date Collected	Time Collected	Grab (G) or Composite (C)	Matrix Code	Total # of Containers	4 oz glass no preservative TCL VOC 8260	Lab Use Only: Volatiles pH < 2	Metals pH < 2	Cyanide pH > 12	Other	Remarks
DP-21 8-12'	4/21/99	9:55	G	S	1	X					
DP-22 12-16'	4/21/99	9:50	G	S	1	X					
DP-23 16-20'	4/21/99	14:15			1	X					TB
DP-24 16-20'		15:20			3	X					MS/MSD
DP-25 12-16'		16:25			1	X					
DP-26 16-20'		16:15			1	X					
DP-27 4-8'	4/20/99	8:15			1	X					
DP-28 4-8'		8:05			1	X					
DP-29 15-17'		11:40			1	X					
DP-30 4-8'		10:20			1	X					

Sampler(s): Dave Stanaitis, Mike Plante, Dave Olson, Chris Hartman

Bottles Relinquished under Airbill No. 4237 4960 6454 — Sampler Relinquished under Airbill No. 5 105 1958 936 2 — Temperature (corrected): ___ C

Relinquished by:	Date:	Time:	Received by:	Date:	Time:	Custody Seal intact?
[signature]	4/21/99	8:00				Yes No
						Yes No
						Yes No

Chrysler Corporation, 800 Chrysler Drive, CIMS 418-00-01, Auburn Hills, Michigan 48326-2757

CHRYSLER CORPORATION

Chain-of-Custody

Phone Number: [illegible]
Fax Number: (810) 379-4050

Project Name: [illegible]
Project Number: [illegible]
PO Number: [illegible]
QF Number: [illegible]
Chrysler PM: [illegible]

Consultant: [illegible]
Address: [illegible]
Consultant PM: [illegible]
Phone: [illegible] Fax: [illegible]

Turn-around Time Request:
24 calendar hrs.
48 calendar hrs.
10 days
28 days

Data Package Deliverables: (circle)
Chrysler Level 1
Chrysler Level 2
Other (specify):

Compound List Parameter/Method/Bottle Type/Preservative: 40 ml glass VOC 8260; TCL VOC 8260

Matrix Codes: S - Soil; SW - Surface Water; GW - Groundwater; A - Air; Sed. - Sediment; O - Other (specify) [illegible]

Field Sample Identification	Date Collected	Time Collected	Grab (G) or Composite (C)	Matrix Code	Total # of Containers	40 ml glass VOC 8260	Lab Use Only: Volatiles pH < 2	Metals pH < 2	Cyanide pH > 12	Other	Remarks
Trip Blank, TO42299	4/22/99	—	G	O	2	X					
DP-27 23-25'		10:20		GW	2	X					
DP-27 38-40'		10:35			2	X					
DP-28 19-21'		9:00			2	X					
DP-28 38-40'		9:30			2	X					
DP-29 31-33'		12:10			2	X					
DP-29 38-40'		12:30			2	X					
DP-30 20-22'		10:45			2	X					
DP-30 38-40'		11:50			6	X					MS/MSD
EO42299-30		11:10		O	2	X					

Sampler(s): Dave Strand, Mike Plante, Dave Olson, Chris Hoffman
Cooler ID # 190
Is RFA sampling complete? Yes No

Bottles Relinquished under Airbill No. 4287 4460 6969
Samples Relinquished under Airbill No. 9105315898362
Temperature (corrected) ___ C

Relinquished by:	Date:	Time:	Received by:	Date:	Time:	Custody Seal Intact?
[signature]	4/22/99	18:00				Yes No
						Yes No
			Received for Laboratory by:			Yes No

Chrysler Corporation 300 Chrysler Drive, CIMS 482-00-51, Auburn Hills, Michigan 48326-2757

Distribution: White copy: Data package Yellow: Retained by laboratory Pink: Retained by sampler

SDG-2213

Revision No. 1
Created: September 22, 1997

CHRYSLER CORPORATION

Chain-of-Custody

Site Code: SC201

RFA Number: 460 2990 0221

Consultant PM: Ken Vogel

Phone: 631 492 1405 Fax: 1026

Phone Number: 1-800-123-5097

Fax Number: (810) 379-4050

Turn-around Time Request:
- 24 calendar hrs.
- 48 calendar hrs.
- 10 days
- 28 days

Data Package Deliverables: (circle)
- Chrysler Level 1
- Chrysler Level 2
- Other (specify):

Compound List-Parameter/Method/Bottle Type/Preservative: 40 ml 8/455 HCl; TCL VOC 8260

Matrix Codes: S - Soil; SW - Surface Water; GW - Groundwater; A - Air; Sed. - Sediment; O - Other (specify)

Field Sample Identification	Date Collected	Time Collected	Grab (G) or Composite (C)	Matrix Code	Total # of Containers	40 ml 8/455 HCl	TCL VOC 8260	Lab Use Only: Volatiles pH <2	Metals pH <2	Cyanide pH > 12	Other	Remarks
DP-21 38-40'	4/21/99	12:00	G	GW	2	X						
DP-22 13.5-20.5'		10:15			2	X						
DP-22 38-40'		11:10			2	X						
DP-23 24-26'		13:50			2	X						
DP-23 38-40'		15:20			2	X						
DP-24 19-21'		13:25			2	X						
DP-24 35-37'		14:30			2	X						
DP-25 19-21'		16:40			2	X						
DP-25 38-40'		17:00			2	X						
EDP043199		18:00		O	2	X						

Sampler(s): Dave Strand, Dave Olson, Mike Plante, Chris Hoffman

Cooler ID # 190

Is RFA sampling complete? Yes / No

Bottles Relinquished under Airbill No. 4287 4960 6969

Samples Relinquished under Airbill No. 8 1053155 9362

Temperature (corrected) ___ C

Relinquished by:	Date:	Time:	Received by:	Date:	Time:	Custody Seal Intact?
[illegible]	4/22/99	18:00				Yes No
Relinquished by:	Date:	Time:	Received by:	Date:	Time:	Custody Seal Intact? Yes No
Relinquished by:	Date:	Time:	Received for Laboratory by:	Date:	Time:	Custody Seal Intact? Yes No

Chrysler Corporation 300 Chrysler Drive, CIMS 482-00-57, Auburn Hills, Michigan 48326-2757

Distribution: White copy: Data package Yellow: Retained by laboratory Pink: Retained by sampler

SDG-2213

Revision No. 1

Page 1 of 5

TABLE 1

DAYTON THERMAL PRODUCTS
DAYTON, OHIO

GORESORBER IDENTIFICATION

GORESORBER SAMPLE IDENTIFICATION NUMBER	SURVEYORS SAMPLE IDENTIFICATION NUMBER	NUMBER OF SAMPLE LOCATIONS	COMMENTS
169953	1069	1	
169954	1068	2	
169955	1067	3	
169956	1066	4	
169957	1065	5	
169958	1064	6	
169959	1063	7	
169960	1062	8	
169961	1061	9	MISSING UPON RETRIEVAL
169962	1060	10	
169963	1059	11	
169964	1058	12	
169965	1057	13	
169966	1052	14	
169967	1099	15	
169968	1098	16	
169969	1097	17	
169970	1096	18	
169971	1095	19	
169972	1094	20	
169973	1093	21	
169974	1092	22	
169975	1091	23	
169976	1090	24	
169977	1089	25	
169978	1088	26	
169979	1087	27	
169980	1086	28	MISSING UPON RETRIEVAL
169981	1085	29	
169982	1084	30	
169983	1083	31	
169984	1082	32	
169985	1081	33	
169986	1080	34	
169987	1079	35	
169988	1078	36	
169989	1077	37	
169990	1076	38	
169991	1075	39	
169992	1074	40	
169993	1073	41	
169994	1072	42	
169995	1071	43	
169998	1070	44	
169999	1003	45	
170000	1004	46	
170001	1005	47	
170002	1006	48	
170003	1007	49	

TABLE 1

DAYTON THERMAL PRODUCTS
DAYTON, OHIO

GORESORBER IDENTIFICATION

GORESORBER SAMPLE IDENTIFICATION NUMBER	SURVEYORS SAMPLE IDENTIFICATION NUMBER	NUMBER OF SAMPLE LOCATIONS	COMMENTS
170004	1008	50	
170005	1009	51	
170006	1010	52	
170007	1011	53	
170008	1041	54	
170009	1012	55	
170010	1013	56	
170011	1014	57	
170012	1015	58	
170013	1016	59	
170014	1017	60	
170015	1018	61	
170016	1019	62	
170017	1021	63	
170018	1022	64	
170019	1023	65	
170020	1025	66	
170021	1042	67	
170022	1043	68	
170023	1044	69	
170024	1045	70	
170026	1046	71	
170027	1047	72	
170028	1048	73	
170029	1049	74	
170030	1050	75	
170031	1051	76	
170032	1053	77	
170033	1054	78	
170034	1055	79	
170035	1056	80	
170036	1001	81	
170037	1002	82	
170038	1040	83	
170039	1039	84	
170040	1037	85	
170041	1036	86	
170042	1034	87	
170043	1033	88	
170044	1031	89	
170045	1030	90	
170046	1029	91	
170047	1028	92	
170048	1027	93	
170049	1026	94	

DAYTON THERMAL PRODUCTS
DAYTON, OHIO

ACTUAL NUMBER OF LABORATORY ANALYSES PERFORMED PER C-O-Cs VERSUS LABORATORY CLAIMS

CHAIN OF CUSTODY	SOIL SAMPLES	SOIL DUPLICATE	SOIL MS/MSD	FIELD OR EQUIPMENT BLANK	TRIP BLANK	HYDRO-PUNCH	TOTAL
RFA YGQP97-228-T SITE WIDE DRILLING PROGRAM							
81	7	0	0	1	0	1	9
82 AND 83	10	1	1	2	1	0	15
84	6	1	1	1	1	0	10
85 AND 87	5	2	1	2	1	0	11
88	2	0	0	1	1	0	4
TOTALS	30	4	3	7	4	1	49

ALL SAMPLES WERE ANALYZED FOR VOCS BY 8260

CHAIN OF CUSTODY	SOIL SAMPLES	SOIL DUPLICATE	SOIL MS/MSD	FIELD OR EQUIPMENT BLANK	TRIP BLANK		TOTAL
RFA YGQP97-234-T AND 235-T BUILDING 40B SOIL CHARACTERIZATION							
26 AND 28574	3	0	0	1	0	NA	4
90 AND 91	5	0	1	2	1	NA	9
TOTALS	8	0	1	3	1	0	13

SEE TAB LABELLED "# OF ANALYSES PER C-O-C" FOR BREAKDOWN OF ANALYSES REQUESTED

CHAIN OF CUSTODY	GROUND-WATER SAMPLES	GROUND-WATER DUPLICATE	GROUND-WATER MS/MSD	FIELD OR EQUIPMENT BLANK	TRIP BLANK		* TOTAL
RFA YGQP98-203-T MONITORING WELL SAMPLING							
585	10	0	0	0	0		10
586	2	1	0	0	1		4
587	10	0	0	0	0		10
588	6	1	0	1	1		
589	7	2	0	1	0		
590	5	0	0	0	1		6
591	2	0	0	0	1		3
TOTALS	42	4	0	2	4	0	52

ALL SAMPLES WERE ANALYZED FOR VOCS BY 8260

DAYTON THERMAL PRODUCTS
DAYTON, OHIO

ACTUAL NUMBER OF LABORATORY ANALYSES PERFORMED PER C-O-Cs VERSUS LABORATORY CLAIMS

SAMPLE LOCATION AND DEPTH	C-O-C	8260 PPL, VOC, GC	1311 TCLP PREP	6/7000 TCLP METALS	HOLD TCLP VOC	150 pH/SOL	9095 LIQ	320 Cl	Ch. 7 IGN.	160 REACTIVE SULFIDE & CYANIDE	8080 PPL, PCB, GC	8270A TCLP,SVOC, GC	420 PHEN, SOL	TOTAL	GRAND TOTAL
RFA YGQP97-234-T AND 235-T BUILDING 40B SOIL CHARACTERIZATION															
TB-1 7-9'	90 AND 91	1	1	1	*	1	1	1	1	1	1	1	1	11	12
TB-3 13-15'	90 AND 91	1	1	1	*	1	1	1	1	1	1	1	1	11	12
TB-4 3-5'	90 AND 91	1	1	1	*	1	1	1	1	1	1	1	1	11	12
TB-4 14-16'	90 AND 91	1	1	1	*	1	1	1	1	1	1	1	1	11	12
TB-6 3-5'	90 AND 91	1	1	1	*	1	1	1	1	1	1	1	1	11	12
TB-6 3-5' MS/MSD	90 AND 91	1	–	–	–	–	–	–	–	–	–	–	–	1	1
FB 121297	90 AND 91	1	–	–	–	–	–	–	–	–	–	–	–	1	1
TB 121297	90 AND 91	1	–	–	–	–	–	–	–	–	–	–	–	1	1
TB-9 3-5'	26 AND 28574	1	1	1	*	1	1	1	1	1	1	1	1	11	12
TB-10 1-3'	26 AND 28574	1	1	1	*	1	1	1	1	1	1	1	1	11	12
TB-12 5-7'	26 AND 28574	1	1	1	*	1	1	1	1	1	1	1	1	11	12
FB 121397	26 AND 28574	1	–	–	–	–	–	–	–	–	–	–	–	1	1
TB 121397	26 AND 28574	1	–	–	–	–	–	–	–	–	–	–	–	1	1
TOTALS		13	8	8	*	8	8	8	8	8	8	8	8	93	
GRAND TOTAL		13	8	8	8	8	8	8	8	8	8	8	8		101

*: ANALYSES WAS TO BE CONDUCTED AFTER RECEIVING APPROVAL FROM LBG. ANALYSES PERFORMED ANYWAY.

THE GRAND TOTAL INCLUDES THE EIGHT UNAUTHORIZED SAMPLES RUN FOR TCLP VOCs

LEGGETTE, BRASHEARS & GRAHAM, INC.
Professional Ground-Water Consultants

JOB 3Chry / Dayton
SHEET NO. _____ OF _____
CALCULATED BY RAC DATE 3-20-98
CHECKED BY _____ DATE _____
SCALE Re: lab [illegible] = Sample [illegible] LBG [illegible]

RFA: VMDP.9800 203-T

	CoC	Field Blank	Trip Blank	Aqueous Samples	Aqueous Dup	Total
	00589	1	Ø	7	2	10
	00590	Ø	1	5	Ø	6
✓	00585	Ø	Ø	10	Ø	10
✓	00586	Ø	1	2	1	4
	00587	Ø	Ø	10	Ø	10
✓	00588	1	1	6	1	9
✓	00591	Ø	1	2	Ø	3
		2	4	42	4	52

LEGGETTE, BRASHEARS & GRAHAM, INC.
Professional Ground-Water Consultants

JOB: Schey / Dayton
SHEET NO. ____ OF ____
CALCULATED BY: TAC DATE: 3-20-98
CHECKED BY ____ DATE ____
SCALE: for lab bottle >= Sample 1 on Bottle

RFA: YGPQ 97 00234T (YGPQ 97 00235*)

COC	Soil Sample	Soil Dup	Field Blank	Trip Blank	Soil MS/MSD	Total
00026A	3	∅	1	1	∅	5
00090A	5	∅	1	1	1	8
? 00091A	~~3~~	∅	∅	∅	∅	~~3~~
continuation of 90A	~~13~~ 8	∅	2	2	1	~~18~~ 13

* Sample parameters would not fit on one label in the RFA therefore RFA: YGPQ97 00235T (Part 2 of 2) was created to complete the sampling request

LEGGETTE, BRASHEARS & GRAHAM, INC.
Professional Ground-Water Consultants

JOB: Schrey4 / dayton
SHEET NO. 1 OF
CALCULATED BY: DVS DATE: 3/20/98
CHECKED BY: DATE:
SCALE: Re: lab claim > # soils than LBG collected

RFA YGQP97-228-T

SDG	COC	Soil	Soil Dup	Aqueous Equipblank	Aqueous Triplblank	Soil MS/MSD	Aqueous Hydropunch	Total
A	81	~~8~~ 7	—	1	—	—	1	9
B	82 83	10	1	2	1	1	—	15
C	84	6	1	1	1	1	—	10
D	85 87	5	2	2	1	1	—	11
E	88	2	—	1	1	—	—	4
Totals		30	4	7	4	3	1	49

Total Soils: 37

Total Aqueous: 12

Total 49

104

LEGGETTE, BRASHEARS & GRAHAM, INC.
Professional Ground-Water Consultants

JOB 3chwy4/dayton
SHEET NO. _____ OF _____
CALCULATED BY DrS DATE 11-12/97
CHECKED BY _____ DATE _____
SCALE SDG-228

C-O-C #	# Soil Samples	# Equipment Blanks	# ms/msD Samples	# Duplicate Samples	# TRIP Blanks	# Hx Rinc
00081	7	1	-0-	-0-	-0-	1
00082	6	2	-0-	1	-0-	-0
00083	4	-0-	1	-0-	1	-0
00084	6	1	1	1	1	-0
Subtotal	23	4	2	2	2	1
00085	5	2	1	2		-0
00087	-0-	-0-	-0-	-0-	1	-0
Subtotal	28	6	3	4	3	1
00088	2	1	0	0	1	0
Subtotal	30	7	3	4	4	1
Max Allowed	51	21	5	5	12	10

CHRYSLER CORPORATION
DAYTON THERMAL PRODUCTS PLANT
DAYTON, OHIO

CHEMICALS DETECTED IN GROUND WATER AT GEM CITY CHEMICALS, INC.
PER JULY 1993 SITE ASSESSMENT REPORT

acetone
benzene
chloroform
1,1-dichloroethane
1,2-dichloroethane
1,1-dichloroethene
cis-1,2-dichloroethene
trans-1,2-dichloroethene
ethylbenzene
hexachlorobutadiene
tetrachloroethene
toluene
1,2,3-trichlorobenzene
1,2,4-trichlorobenzene
1,1,1-trichloroethane
trichloroethene
vinyl chloride

CHRYSLER CORPORATION
DAYTON THERMAL PRODUCTS PLANT
DAYTON, OHIO

CHEMICALS FOUND IN SOIL AT GEM CITY CHEMICALS, INC.
PER JULY 1993 SITE ASSESSMENT REPORT

methylene chloride
tetrachloroethylene
trichloroethylene
1,1,1-trichloroethane
methyl alcohol
isopropyl alcohol
acetone
toluene
xylene
methyl ethyl ketone

S:\TECH\3CHRY\DAYTON\ANALYTIC\

CHRYSLER CORPORATION
DAYTON THERMAL PRODUCTS PLANT
DAYTON, OHIO

CHEMICALS HANDLED BY GEM CITY CHEMICALS, INC.
PER JULY 1993 SITE ASSESSMENT REPORT

ACIDS

acetic	nitric
chromic	oxalic
hydrochloric	phosphoric
hydrofluoric	sulfuric

SOLVENTS

butyl acetate	1,1,1-trichloroethane (1,1,1-TCA)	isopropyl alcohol
butyl alcohol	ethyl acetate	ethyl alcohol
methyl alcohol	methyl ethyl ketone (MEK)	glycol ethers
methylene chloride	methyl isobutyl ketone (MIBK)	meneral spirits
toluene	tetrachloroethylene (PERC)	acetone
xylene	trichloroethylene (TCE)	naphtha
freon	ethylene glycol	acetates

OTHERS: dry & liquid

formaldehyde	sodium hypochlorite	cyanides
dry calcium chloride	dry sodium hydroxide	ammonium hydroxide
liquid calcium chloride	liquid sodium hydroxide	ferric chloride
ammonia	soda ash	calcium hypochlorite
lime	urea	phosphate
sodium nitrate	copper sulfate	sodium silicate
sodium hyposulfite	potassium permanganate	sodium bisulfite

S:\TECH\3CHRY\DAYTON\ANALYTIC\

GROUND-WATER SAMPLING DATA SHEET

CLIENT: Chrysler Corporation	PROJECT TITLE: Dayton Thermal Products Plant
JOB CODE: 3CHRY4/DAYTON	ADDRESS: 1600 Webster Street
DATE:	CITY, STATE, ZIP: Dayton, Ohio 45404

GENERAL DATA	STABILIZATION DATA							
LOCATION ID:	WELL VOLUMES (gal)	TIME	TEMP. C	pH	COND. (umhos)	ORP (mohs)	DISSOLVED OXYGEN (mg/L)	SOLUBLE IRON (mg/L)
KEY NUMBER:								
CASING DIAMETER (in):								
WELL DEPTH (ft):								
DEPTH TO WATER (ft):								
COLUMN LENGTH (ft):								
TOTAL VOLUME PURGED (gal):								

MISCELLANEOUS

PURGE METHOD:	
SAMPLING METHOD:	
ANALYSIS REQUESTED:	
WEATHER CONDITIONS:	
SAMPLE DESCRIPTION:	
REMARKS:	
SAMPLER:	TIME SAMPLE COLLECTED:

LEGGETTE, BRASHEARS & GRAHAM, INC.
1210 WEST COUNTY ROAD E
ST. PAUL, MINNESOTA 55112

No volatile organic compounds were detected in the first round of groundwater samples collected from MWC-1, MWC-2, or MWC-3.

Second Round Groundwater Samples

The laboratory analysis detected several volatile organic compounds in the second round groundwater samples. The samples containing these detected compounds are listed in the following tables.

VOCs in Second Round Groundwater Samples

VOCs	MWA-1	MWA-2	MWA-3	MWA-4	MWA-5	MWA-6
tetrachloroethylene	2200	1500	1200	11	140	7.3
trichloroethene	180	250	130	37000	1500	1400
1,2-dichlorobenzene	ND	1.8	ND	ND	ND	ND
1,1-dichloropropene	ND	ND	2.2	ND	ND	ND
1,2-dichloroethene (total)	110	8.9	140	16000	190	110
cis-1,2 dichloroethylene	110	8.5	120	16000	190	110
trans-1,2 dichloroethylene	1.3	3.6	17	75	3.3	3.1
1,1,1-trichloroethane	2000	3800	2300	48	3600	420
1,1,2-trichloroethane	ND	ND	ND	1.8	2.6	ND
1,1,1,2-tetrachloroethane	ND	ND	ND	ND	1.4	ND
chloroform	ND	5	2.2	1.2	2	ND
1,1-dichloroethane	69	3.6	710	12	93	4.3
1,2 -dichloroethane	ND	ND	9.4	ND	7.5	ND
1,1-dichloroethene	100	270	100	37	390	34
dichlorodifluoromethane	70	42	17	ND	ND	ND
vinyl chloride	ND	77	53	1400	ND	ND
chloromethane	ND	ND	2.6	ND	ND	ND
chloroethane	ND	ND	2.6	ND	ND	ND

VOCs in Round #2 Groundwater Samples. All Results in Parts per Billion (ug/l).
ND denotes analyte was not detected at the laboratory detection levels.

Soil Metals for Soil Boring Samples

Metals	SB-1 @ 9'	SB-2 @ 19'	SB-3 @ 14'	SB-4 @ 14'	SB-5 @ 29'	SB-6 @ 14'	SB-7 @ 24'	SB-8 @ 24'	SB-9 @ 19'	SB-10 @ 29'
Aluminum	1600	1400	1900	1900	1700	1800	1500	1900	1600	1400
Barium	7.2	12	11	11	12	11	12	11	8	9.6
Beryllium	ND	ND	ND	0.22	ND	ND	ND	ND	ND	ND
Cadmium	0.65	0.63	0.58	0.67	0.53	0.72	0.73	0.47	0.72	0.46
Calcium	140,000	110,000	130,000	260,000	130,000	100,000	140,000	110,000	77,000	70,000
Chromium	7.1	6.9	6.9	5.6	8.7	5	4.5	6.8	5.2	4.8
Cobalt	ND	ND	ND	4.6	ND	ND	ND	ND	ND	ND
Silver	3.9	3.1	3.6	2.7	3.3	3.2	2.8	2.9	3	2.4
Copper	2.2	8.9	8.7	8.7	8	9.7	10	7.2	8.1	8.1
Sodium	280	140	190	200	210	210	180	160	290	140
Vanadium	ND	ND	ND	8.2	ND	ND	ND	ND	ND	ND
Zinc	16	18	20	16	14	17	24	16	19	22
Antimony	ND	ND	ND	ND	ND	ND	ND	ND	ND	ND
Arsenic	4.8	4.3	5.6	3	16	5.4	6.4	6.5	5.2	3
Lead	2	2	2	2	3	2.4	2.5	4.1	1.6	2.8
Selenium	ND	ND	ND	ND	ND	ND	ND	ND	ND	ND
Thallium	1.2	1.3	0.8	1.7	1.4	1.8	1.2	1.1	1.3	0.94
Mercury	ND	ND	ND	ND	ND	ND	ND	ND	ND	ND

Metals in Soil Samples from Soil Borings.
All Results in Parts per Million (mg/kg).
ND denotes analyte was not detected at the laboratory detection levels.

Soil Metals for Monitoring Well Boring Samples

Metals	MWA1 @ 24'	MWA2 @ 19'	MWA3 @ 24'	MWA4 @ 24'	MWA5 @ 24'	MWA6 @ 24'
Aluminum	2300	2300	3300	1900	1800	2300
Barium	12	13	11	15	9	14
Beryllium	0.099	0.21	0.26	ND	0.1	ND
Cadmium	0.3	0.71	0.78	0.66	0.68	0.71
Calcium	93,000	220,000	90,000	100,000	150,000	100,000
Chromium	7.4	9	7.1	6.4	7.9	5
Cobalt	5.7	4.9	4.1	2.6	5.4	2.8
Silver	3.7	2.7	3.3	2.1	4.2	2
Copper	9	9.6	7.3	11	8.7	11
Sodium	140	150	120	140	190	120
Vanadium	9.7	9.6	8.7	5.6	8.7	5.4
Zinc	17	19	20	23	15	19
Antimony	ND	ND	ND	ND	ND	ND
Arsenic	6.5	4.4	5.6	2.6	2.5	4.2
Lead	4	3.2	3.3	3.2	3.5	3
Selenium	ND	ND	ND	ND	ND	ND
Thallium	2	1.9	0.9	0.82	2.6	0.61
Mercury	ND	ND	ND	ND	ND	ND

Metals in Soil Samples from Monitoring Wells. All Results in Parts per Million (mg/kg).
ND denotes analyte was not detected at the laboratory detection levels.

Soil Metals for Monitoring Well Boring Samples

Metals	MWB2 @ 24'	MWB3 @ 24'	MWB4 @ 24'	MWB4 @ 19'	MWB5 @ 24'	MWB6 @ 24'
Aluminum	2100	1500	2000	1900	2100	2900
Barium	12	12	14	13	10	10
Beryllium	0.088	0.3	0.23	0.21	0.27	0.28
Cadmium	0.62	0.68	0.62	0.67	0.55	0.77
Calcium	83,000	140,000	190,000	260,000	73,000	100,000
Chromium	7.2	6.8	6.5	6.2	6.3	7
Cobalt	5.1	8.2	4.4	4.8	8.3	4.4
Silver	3.7	3.1	2.5	2.5	2.7	3.1
Copper	10	12	8.8	9.1	9.1	8.1
Sodium	140	190	160	130	170	130
Vanadium	9.5	9.5	7.4	8.6	11	8
Zinc	22	19	18	18	22	18
Antimony	ND	ND	ND	ND	ND	ND
Arsenic	7.1	6	4.1	4.1	8.4	3.5
Lead	3.5	3	4.6	4.5	3.3	2.6
Selenium	ND	ND	ND	ND	ND	ND
Thallium	2	4.6	1.6	1.6	2.1	0.75
Mercury	ND	ND	ND	ND	ND	ND

Metals in Soil Samples from Monitoring Wells. All Results in Parts per Million (mg/kg).
ND denotes analyte was not detected at the laboratory detection levels.

The detected metal species were compared to the mean concentrations of those metals occurring naturally in soils of the Eastern United States (includes Ohio). This information was compiled by the United States Geological Survey and presented in the 1984 publication Element Concentrations in Soils and Other Surficial Materials of the Conterminous United States, Professional Paper 1270, by Shacklette and Boerngen. A summary of this comparison is presented in the following table.

Comparison of Mean Metals Concentration and Sample Concentrations

Metals Species	Concentration Range (# Samples)	Eastern US Mean (Includes Ohio)
Aluminum	1400-2900 ppm (all)	5.7 %
Barium	7.2 - 15.0 ppm (all)	420 ppm
Beryllium	0.099-0.3 ppm (10 of 21)	0.85 ppm
Cadmium	0.3-0.78 ppm (all)	None Given
Calcium	70,000-260,000 ppm (all)	0.65 %
Chromium	4.5-9.0 ppm (all)	52 ppm
Cobalt	2.6-8.3 ppm (12 of 21)	9.2 ppm

Metals Species	Concentration Range (# Samples)	Eastern US Mean (Includes Ohio)
Silver	2.0-4.2 ppm (all)	None Given
Copper	2.2-12.0 ppm (all)	22 ppm
Sodium	120-290 ppm (all)	0.78 %
Vanadium	5.4-11.0 ppm (12 of 21)	66 ppm
Zinc	14-24 ppm (all)	52 ppm
Antimony	All Not Detected	-----
Arsenic	2.5-16.0 ppm (all)	7.4 ppm
Lead	1.6-4.6 ppm (all)	17 ppm
Selenium	All Not Detected	-----
Thallium	0.61-4.6 ppm (all)	None Given
Mercury	All Not Detected	-----

A total of eighteen metals species were targeted for analysis. Three of the targeted metals were below detectable levels in the samples. Thirteen metals were found to be within the Eastern United States mean values for those metals. Two metals were found to be present at levels significantly above the Eastern United States mean values. Calcium was measured in the range between 7 % and 26 % for all the soil samples. This range is well above the Eastern United States mean value of 0.65 %, but within the expected range for calcium in the Dayton, Ohio area because the sands and gravels underlying the area are known to be calcareous sediments, that is, made up of calcium-bearing minerals. Arsenic was measured in the range between 2.5 ppm and 16.0 ppm. The Eastern United States mean value is 7.4 ppm, however, the observed range of naturally occurring arsenic was reported up to 73 ppm for the Eastern United States.

Three metals, cadmium, silver, and thallium, were not assigned mean values in the referenced report. Common ranges for cadmium and silver were compiled by Dragun, 1988 and were compared to the analyzed samples. Cadmium concentrations were between 0.3 and 0.78 ppm for all samples which is within the common range reported for cadmium of 0.01 to 7.0 ppm. Silver concentrations were within the range of 2.0 to 4.2 ppm for all samples which is within the common range reported for silver of 0.1 to 5.0 ppm. Thallium was detected in all samples at concentrations in the range of 0.61 to 4.6 ppm.

Chemical Analysis: TOC

Soil samples were collected and analyzed for TOC. The samples collected for TOC analysis were selected as representative of the subsurface materials encountered. Laboratory results for the TOC analysis are listed below:

Total Organic Carbon in Soil Samples

SB-4 @ 30'	MWB1 @ 49'	MWB3 @ 49'	MWB4 @ 49'	MWB5 @ 49'
35,000	17,000	100	18,000	21,000

TOC in Soil Samples.
All Results in Parts per Million (mg/kg).

Organic carbon typically exists in a variety of oxidation states. Some of these carbon compounds can be oxidized further by biological or chemical processes. TOC provides a direct expression of the total organic content of the sample independent of the oxidation state of the organic matter. TOC does not measure other organically bound elements that can contribute to the total oxygen demand during the oxidation process.

The TOC concentrations in the range of 17,000 to 35,000 ppm indicate significant organic carbon is available to be oxidized further by biological or chemical processes. The relatively low concentration of TOC found in MWB-3 @ 49' indicates relatively little organic carbon is available for biological or chemical oxidation in that sample.

QA/QC

The QA/QC program for chemical analysis of the soil samples consisted of the collection and analysis of duplicate samples, spiked samples, and equipment blank. Two duplicate soil samples were collected and analyzed as was done for all soil samples. MWA-7 is a duplicate sample of MWB-2 from 24'. MWB-7 is a duplicate of MWB-4 from 19'. Soil samples were spiked in the laboratory, analyzed and the results were retained at the laboratory in their records retention system. One equipment blank was collected by pouring deionized water over the decontaminated sampling equipment and collecting the

rinsate for laboratory analysis. The rinsate water sample was identified as MWA-5-24. No VOCs were detected in the equipment blank sample indicating the decontamination of the equipment was thorough and no cross-contaminants were introduced to the samples.

The detected VOCs and targeted metals in the duplicate sample pairs are presented in the following table. Overall reproducibility of the laboratory results between the duplicate samples showed that sample handling did not appear to introduce any significant variability in the results.

Duplicate Soil Sample Pairs

Duplicate Samples	MWB2 @ 24'	MWA7	% Difference	MWB4 @ 19'	MWB7	% Difference
tetrachloroethylene	4000	2600	35	ND	ND	0
1,1,1-trichloroethane	ND	21	>100	ND	ND	0
trichloroethene	ND	38	>100	ND	ND	0
dichloromethane	20	ND	>100	ND	ND	0
Aluminum	2100000	2200000	4	1900000	1800000	5
Barium	12000	13000	7	13000	11000	15
Beryllium	88	95	7	210	190	9
Cadmium	620	750	17	670	630	6
Calcium	83000000	120000000	31	260000000	230000000	11
Chromium	7200	8400	14	6200	5900	5
Cobalt	5100	5800	12	4800	4200	12
Silver	3700	3400	8	2500	3600	31
Copper	10000	11000	9	9100	8400	8
Sodium	140000	150000	7	130000	130000	0
Vanadium	9500	9200	3	8600	7800	9
Zinc	22000	25000	12	18000	16000	11
Antimony	ND	ND	0	ND	ND	0
Arsenic	7100	4000	44	4100	2500	39
Lead	3500	3600	3	4500	3000	33
Selenium	ND	ND	0	ND	ND	0
Thallium	2000	1800	10	1600	1900	16
Mercury	ND	ND	0	ND	ND	0

VOCs detected in Duplicate Soil Samples shown in Parts per Billion (ug/kg),
Metals Targeted in Duplicate Soil Samples shown in Parts per Million (mg/kg).
ND denotes analyte was not detected at the laboratory detection levels.

VOCs in Second Round Groundwater Samples

VOCs	MWB-1	MWB-2	MWB-3	MWB-4	MWB-5	MWB-6
tetrachloroethylene	ND	ND	ND	5.6	ND	1.2
trichloroethene	ND	ND	1100	6.8	ND	760
benzene	ND	ND	2.1	ND	ND	ND
1,2-dichloroethene (total)	ND	ND	3500	1.7	ND	230
cis-1,2 dichloroethylene	ND	ND	3500	1.7	ND	210
trans-1,2 dichloroethylene	ND	ND	28	ND	ND	14
1,1,1-trichloroethane	ND	ND	350	1.3	ND	84
1,1,2-trichloroethane	ND	ND	3.9	ND	ND	ND
chloroform	ND	ND	4.8	ND	ND	ND
1,1-dichloroethane	ND	ND	28	ND	ND	130
1,2 -dichloroethane	ND	ND	42	ND	ND	1
1,1-dichloroethene	ND	ND	28	ND	ND	27
trichlorofluoromethane	ND	ND	ND	ND	ND	ND
dichlorodifluoromethane	ND	ND	ND	ND	ND	4.2
vinyl chloride	ND	ND	26	ND	ND	130
chloromethane	ND	ND	ND	ND	ND	14

VOCs in Round #2 Groundwater Samples. All Results in Parts per Billion (ug/l).
ND denotes analyte was not detected at the laboratory detection levels.

No volatile organic compounds were detected in the second round of groundwater samples collected from MWC-1, MWC-2, or MWC-3.

Findings

Three isoconcentration contour maps were generated which show the interpreted distribution of volatile organic compounds in groundwater within the unconfined aquifer. Maps were prepared showing: total VOCs (sum of the detected compounds in each well), tetrachloroethylene, and trichloroethene. These maps are included as Drawings 16, 17, and 18 for the first round results, and as Drawings 19, 20, and 21 for the second round results. All Drawings are presented in Volume II of this report.

No VOCs were detected in any of the three deeper wells during analysis of the first round or the second round groundwater samples. Recognizable areas of the site having a particular pattern of VOC contamination in the vadose zone (Area A, B, C) were presented as a working model. This model continues to be useful in the discussion of

Table 2
DAYTON THERMAL PRODUCTS PLANT
BUILDING 40B

WASTE CHARACTERIZATION SOIL QUALITY DATA
DECEMBER 1997

COMPOUND	UNITS	TB-1 7-9 FEET	TB-3 13-15 FEET	TB-4 3-5 FEET	TB-4 14-16 FEET	TB-6 3-5 FEET	TB-9 3-5 FEET	TB-10 1-3 FEET	TB-12 5-7 FEET
DATE SAMPLED		12/11/97	12/11/97	12/12/97	12/12/97	12/12/97	12/13/97	12/13/97	12/13/97
TRIVALENT CHROMIUM									
TRIVALENT CHROMIUM	mg/L	<0.10	<0.10	<0.10	<0.10	<0.10	<0.10	<0.10	<0.10
INDUCTIVELY COUPLED PLASMA (ICP) METALS, TCLP									
SILVER	mg/L	<0.50	<0.50	<0.50	<0.50	<0.50	<0.50	<0.50	<0.50
ARSENIC	mg/L	<0.50	<0.50	<0.50	<0.50	<0.50	<0.50	<0.50	<0.50
BARIUM	mg/L	<10.0	<10.0	<10.0	<10.0	<10.0	<10.0	<10.0	<10.0
CADMIUM	mg/L	<0.10	<0.10	<0.10	<0.10	<0.10	<0.10	<0.10	<0.10
CHROMIUM	mg/L	<0.50	<0.50	<0.50	<0.50	<0.50	<0.50	<0.50	<0.50
COPPER	mg/L	<1.0	<1.0	<1.0	<1.0	<1.0	<1.0	<1.0	<1.0
NICKEL	mg/L	0.11	<0.040	0.064	<0.040	<0.040	<0.040	<0.040	<0.040
LEAD	mg/L	<0.50	<0.50	<0.50	<0.50	<0.50	<0.50	<0.50	<0.50
SELENIUM	mg/L	<0.25	<0.25	<0.25	<0.25	<0.25	<0.25	<0.25	<0.25
ZINC	mg/L	<1.0	<1.0	<1.0	<1.0	<1.0	<1.0	<1.0	<1.0
MERCURY IN LIQUID WASTE, TCLP									
MERCURY	mg/L	<0.0020	<0.0020	<0.0020	<0.0020	<0.0020	<0.0020	<0.0020	<0.0020
ORGANOCHLORINE PESTICIDES AND PCBs									
AROCLOR 1016	ug/kg	<17	<17	<20	<17	<23	<19	<19	<18
AROCLOR 1221	ug/kg	<17	<17	<20	<17	<23	<19	<19	<18
AROCLOR 1232	ug/kg	<17	<17	<20	<17	<23	<19	<19	<18
AROCLOR 1242	ug/kg	<17	<17	<20	<17	<23	<19	<19	<18
AROCLOR 1248	ug/kg	<17	<17	<20	<17	<23	<19	<19	<18
AROCLOR 1254	ug/kg	<35	<35	<40	<35	<45	<37	<37	<35
AROCLOR 1260	ug/kg	<35	<35	<40	<35	<45	<37	<37	<35
INORGANIC ANALYSIS									
CHLORINE (TOTAL HALOGENS)	%	3.2	2.7	1.2	2.3	<1.0	0.46	<0.10	<0.10
REACTIVE CYANIDE	mg/kg	<210	<210	<240	<210	<270	<220	<230	<210
HEXAVALENT CHROMIUM	mg/L	<0.02	<0.02	<0.02	<0.02	<0.02	<0.02	<0.02	<0.02
IGNITIBILITY	--	NEG	NEG	NEG	NEG	NEG	NEG	NEG	NEG
DI LEACHABLE pH	--	9.2	9.3	8.5	9.2	7.2	8.5	8.3	9.3
PAINT FILTER TEST	--	NEG	NEG	NEG	NEG	NEG	NEG	NEG	NEG
SPECIFIC GRAVITY	--	1.2	1.5	1.9	1.5	1.5	1.3	0.98	1.5
REACTIVE SULFIDE	mg/kg	<210	<210	<240	<210	<270	<220	<230	<210
TOTAL RESIDUE AS PERCENT SOLIDS	%	95.8	95.5	82.4	95.7	74.0	89.6	88.9	95.3

TCLP: TOXICITY CHARACTERISTIC LEACHING PROCEDURE

PCB: POLYCHLORINATED BIPHENOLS

mg/L: MILLIGRAMS PER LITER

mg/kg: MILLIGRAMS PER KILOGRAM

ug/kg: MICROGRAMS PER KILOGRAM

%: PERCENT

<: LESS THAN DETECTION LIMIT

NEG: NEGATIVE

--: NO UNITS

S:\TECH\3CHRY\DAYTON\ANALYTICAL
SOILQUAL.XLS, BLDG40B SOIL WASTE CHARACT
2/12/98, 12:11 PM

NET NATIONAL ENVIRONMENTAL TESTING, INC.

Dayton Division
3601 South Dixie Drive
Dayton, OH 45439
Tel (937) 294-6856

Post-it® Fax Note 7671	Date 10/29/97	# of pages ▶
To KEN VOGEL	From K Whitlock	
Co./Dept.	Co.	
Phone #	Phone # 937 224 2467	
Fax # 612 490 1006	Fax #	

ANALYTICAL

Jim Tell
CHRYSLER (ACCUSTAR)
1600 Webster Street
Dayton, OH 45404

10/15/1997

NET Job Number: 97.17399

Enclosed is the analytical report for the following sample(s) submitted to the Dayton Division of NET, Inc. for analysis:

Sample Number	Sample Description	Date Taken	Date Received
430689	Wastewater	10/03/1997	10/03/1997

Parameters Analyzed for NPDES permit or sanitary sewer discharge

National Environmental Testing, Inc. certifies that the analytical results contained herein apply only to the specific samples analyzed.

Reproduction of this analytical report is permitted only in its entirety.

Enclosure

Project Coordinator

CORRECTED REPORT - Reporting limits were entered incorrectly on original report for organics.

NET® NATIONAL ENVIRONMENTAL TESTING, INC.

Dayton Division
3601 South Dixie Drive
Dayton, OH 45439
Tel: (937) 294-6856
Fax: (937) 294-7816

ANALYTICAL REPORT

Jim Tell
CHRYSLER (ACCUSTAR)
1600 Webster Street
Dayton, OH 45404

10/15/1997

JOB NUMBER: 97.17399

SAMPLE NO.: 430689

Sample Description: Wastewater

Date Taken: 10/03/1997

Date Received: 10/03/1997

VOLATILE COMPOUNDS - 624

Parameter	Result	Unit	Date Anal.	Analyst
Acrolein	<200	ug/L	10/07/1997	cae
Acrylonitrile	<200	ug/L	10/07/1997	cae
Benzene	<5	ug/L	10/07/1997	cae
Bromodichloromethane	<5	ug/L	10/07/1997	cae
Bromoform	<5	ug/L	10/07/1997	cae
Bromomethane	<20	ug/L	10/07/1997	cae
Carbon tetrachloride	<5	ug/L	10/07/1997	cae
Chlorobenzene	<5	ug/L	10/07/1997	cae
Chloroethane	<50	ug/L	10/07/1997	cae
2-Chloroethyl vinyl ether	<20	ug/L	10/07/1997	cae
Chloroform	<5	ug/L	10/07/1997	cae
Chloromethane	<50	ug/L	10/07/1997	cae
Dibromochloromethane	<5	ug/L	10/07/1997	cae
1,1-Dichloroethane	<5	ug/L	10/07/1997	cae
1,2-Dichloroethane	<5	ug/L	10/07/1997	cae
1,1-Dichloroethene	<5	ug/L	10/07/1997	cae
trans-1,2-Dichloroethene	<5	ug/L	10/07/1997	cae
1,2-Dichloropropane	<5	ug/L	10/07/1997	cae
cis-1,3-Dichloropropene	<5	ug/L	10/07/1997	cae
trans-1,3-Dichloropropene	<5	ug/L	10/07/1997	cae
Ethylbenzene	<5	ug/L	10/07/1997	cae
Methylene chloride	<50	ug/L	10/07/1997	cae
1,1,2,2-Tetrachloroethane	<5	ug/L	10/07/1997	cae
Tetrachloroethene	<5	ug/L	10/07/1997	cae
Toluene	<5	ug/L	10/07/1997	cae
1,1,1-Trichloroethane	<5	ug/L	10/07/1997	cae
1,1,2-Trichloroethane	<5	ug/L	10/07/1997	cae
Trichloroethene	<5	ug/L	10/07/1997	cae
Trichlorofluoromethane	<5	ug/L	10/07/1997	cae
Vinyl chloride	<10	ug/L	10/07/1997	cae
Surrogate: d4-1,2-DCE	101	%	10/07/1997	cae
Surrogate: d8-Toluene	104	%	10/07/1997	cae
Surrogate: BFB	95	%	10/07/1997	cae

NATIONAL ENVIRONMENTAL TESTING, INC.

Dayton Division
3601 South Dixie Drive
Dayton, OH 45439
Tel: (937) 294-6856
Fax: (937) 294-7816

ANALYTICAL REPORT

Jim Tell
CHRYSLER (ACCUSTAR)
1600 Webster Street
Dayton, OH 45404

10/15/1997

JOB NUMBER: 97.17399

SAMPLE NO.: 430689

Sample Description: Wastewater

Date Taken: 10/03/1997

Date Received: 10/03/1997

Parameter	Result	Unit	Date Anal.	Analyst
Total Toxic Organics	<200.	ug/L	10/07/1997	dmg

.2.1 mg/Per Liter

NATIONAL ENVIRONMENTAL TESTING, INC.

Dayton Division
3601 South Dixie Drive
Dayton, OH 45439
Tel: (937) 294-6856
Fax: (937) 294-7816

FIELD REPORT

JOB No.: 97.17399
CLIENT: Chrysler
PROJECT: Facility Discharge
DATE: 10/2/97

An ISCO model 2700 auto sampler was used in the composite mode of operation. The sampler was equipped with a **PLASTIC** composite jug, **TEFLON** suction line, **BATTERY**, ice, and strainer.

The sampler was set to take a sample every 20 minutes for **24 hours**.

Monitoring started 13:00 on 10/2/97.
Monitoring ended 12:45 on 10/3/97.

The composite sample was turbid with no visible solids.

The following grab parameters were taken on 10/3/97 at 12:40:

pH
Cyanide
Volatile Organic Compounds

NATIONAL ENVIRONMENTAL TESTING, INC.

Dayton Division
3601 South Dixie Drive
Dayton, OH 45439
Tel: (937) 294-6856
Fax: (937) 294-7816

ANALYTICAL REPORT

Jim Tell
CHRYSLER (ACCUSTAR)
1600 Webster Street
Dayton, OH 45404

10/15/1997

JOB NUMBER: 97.17399

SAMPLE NO.: 430689

Sample Description: Wastewater

Date Taken: 10/03/1997

Date Received: 10/03/1997

Parameter		Result	Unit	Date Anal.	Analyst
Cyanide, Total	1.18	<0.005	mg/L	10/06/1997	kkh
pH, Field	6-12	10.21	S.U.	10/03/1997	rse
CADMIUM, ICPMS	.3	0.0011	mg/L	10/06/1997	ekh
CHROMIUM, ICPMS	2.73	<0.0020	mg/L	10/06/1997	ekh
COPPER, ICPMS	2.0	0.0165	mg/L	10/06/1997	ekh
LEAD, ICPMS	.68	0.0014	mg/L	10/06/1997	ekh
MERCURY, CVAA	.0025	<0.0002	mg/L	10/07/1997	jmm
MOLYBDENUM, ICPMS	.3	0.0341	mg/L	10/06/1997	ekh
NICKEL, ICPMS	2.6	<0.0050	mg/L	10/06/1997	ekh
SILVER, ICPMS	.42	<0.0005	mg/L	10/06/1997	ekh
ZINC, ICPMS	2.57	<0.050	mg/L	10/06/1997	ekh

COMPUCHEM
a division of Liberty Analytical Corp.

FAX COVER SHEET

Date: 11/6/97

To: Ken Vogel
LBG

Fax: 612-490-1006

From: Diane Ellmore

Phone: 919.379.4011

Fax: 919.379.4040

RE: RFA 228 - Dayton Thermal

Number of pages including cover sheet 3

Message:

Ken - Please ~~note~~ review the reporting limits (RL) attached. One is water & the other soil. If there is any problems with these values, please let me know.

- Diane

(These reporting limits are from Quanterra in North Canton, OH)

501 Madison Avenue, Cary, NC 27513, Tel. 919.379.4100, Fax: 919.379.4050

Quote No.: 20831
Revision: 1-00
Dated: 8/28/1997
Printed: 16:17:31 - 11/05/1997
Client Number: 389977
Project Manager: Jeffrey C. Smith
Protocol: B Water Parameters
SAC: XX I 25 MZ 01
List: 02001
Units: ug/L
Test Description: WATER, 8260A, TCL Volatiles (25 ml)

Analytical TAT: 14
Networkable (Y/N): N
Tics (Y/N): N
Dry Weight (Y/N): N
Qualifiers (Y/N): Y

Synonym	Name	RL
00574	Chloromethane	2
00343	Bromomethane	2
02613	Vinyl chloride	2
00550	Chloroethane	2
01811	Methylene chloride	1
00011	Acetone	10
00459	Carbon disulfide	1
00943	1,1-Dichloroethene	1
00933	1,1-Dichloroethane	1
00953	1,2-Dichloroethene (total)	1
00569	Chloroform	1
00936	1,2-Dichloroethane	1
00373	2-Butanone	5
02516	1,1,1-Trichloroethane	1
00463	Carbon tetrachloride	1
00323	Bromodichloromethane	1
00986	1,2-Dichloropropane	1
00996	cis-1,3-Dichloropropene	1
02525	Trichloroethene	1
00535	Dibromochloromethane	1
02523	1,1,2-Trichloroethane	1
00196	Benzene	1
01000	trans-1,3-Dichloropropene	1
00340	Bromoform	1
01845	4-Methyl-2-pentanone	5
01515	2-Hexanone	5
02445	Tetrachloroethene	1
02439	1,1,2,2-Tetrachloroethane	1
02485	Toluene	1
00521	Chlorobenzene	1
01332	Ethylbenzene	1
02355	Styrene	1
02627	Xylenes (total)	1

Quote No.: 20831
Revision: 1-00
Dated: 8/28/1997
Printed: 16:17:31 - 11/05/1997
Client Number: 389977
Project Manager: Jeffrey C. Smith
Protocol: A Soil Parameters
SAC: XX A 15 MZ 01
List: 02001
Units: ug/kg
Test Description: SOLID, 8260A, TCL Volatiles

Analytical TAT: 14
Networkable (Y/N): N
Tics (Y/N): N
Dry Weight (Y/N): Y
Qualifiers (Y/N): Y

Synonym	Name	RL
00574	Chloromethane	10
00343	Bromomethane	10
02613	Vinyl chloride	10
00550	Chloroethane	10
01811	Methylene chloride	5
00011	Acetone	20
00459	Carbon disulfide	5
00943	1,1-Dichloroethene	5
00933	1,1-Dichloroethane	5
00953	1,2-Dichloroethene (total)	5
00569	Chloroform	5
00936	1,2-Dichloroethane	5
00373	2-Butanone	20
02510	1,1,1-Trichloroethane	5
00463	Carbon tetrachloride	5
00323	Bromodichloromethane	5
00986	1,2-Dichloropropane	5
00990	cis-1,3-Dichloropropene	5
02525	Trichloroethene	5
00535	Dibromochloromethane	5
02523	1,1,2-Trichloroethane	5
00196	Benzene	5
01000	trans-1,3-Dichloropropene	5
00340	Bromoform	5
01845	4-Methyl-2-pentanone	20
01515	2-Hexanone	20
02445	Tetrachloroethene	5
02439	1,1,2,2-Tetrachloroethane	5
02489	Toluene	5
00521	Chlorobenzene	5
01333	Ethylbenzene	5
02355	Styrene	5
02627	Xylenes (total)	5

CHRYSLER CORPORATION

Chain-of-Custody

00094 A

CompuChem Precision Labs 501 Madison Avenue Cary, NC 27513 Phone Number: 1-800-833-5097 Fax Number: (919) 379-4050	Project Name: Dayton Thermal Products Site Location: Dayton, Ohio Site Code: SC001 RFA Number: Chrysler PM: Gary Stanczak	Consultant: Leggette, Brashears & Graham Address: 1210 W County Road E St. Paul, MN 55112 Consultant PM: Ken Vogel Phone: 612 490 1405 Fax: 612 490 1426

Turn-around Time Request:
24 calendar hrs.
48 calendar hrs.
10 days
28 days

Data Package Deliverables: (circle)
Chrysler Level 1
Chrysler Level 2
Other (specify):

Matrix Codes
S - Soil
SW - Surface Water
GW - Groundwater
A - Air
Sed. - Sediment
O - Other (specify) _____

Field Sample Identification	Date Collected	Time Collected	Grab (G) or Composite (C)	Matrix Code	Total # of Containers	Gas Plus Vinyl Chloride list									Volatiles pH <2	Metals pH < 2	Cyanide pH > 12	Other ____	Remarks
AS/SVE-end	3/26/98	1615	G	A	1	X													

Lab Use Only

Sampler(s): Brad Granley

Cooler ID # _____

Is RFA sampling complete? Yes No

Bottles Relinquished under Airbill No.			Samples Relinquished under Airbill No.			Temperature (corrected) ____ C
Relinquished by: Brad Granley	Date: 3/26/98	Time: 1400	Received by: [illegible]	Date: 3/26/98	Time: 1400	Custody Seal Intact? Yes No
Relinquished by: [illegible]	Date: 3/27/98	Time: 0745	Received by: Paul Spurt	Date: 3/27/98	Time: 7:45	Custody Seal Intact? Yes No
Relinquished by:	Date:	Time:	Received for Laboratory by:	Date:	Time:	Custody Seal Intact? Yes No

Chrysler Corporation 800 Chrysler Drive, CIMS 482-00-51, Auburn Hills, Michigan 48326-2757

Distribution: White copy: Data package Yellow : Retained by laboratory Pink: Retained by sampler

FedEx USA Airbill — FedEx Tracking Number 804822939373 — Form ID No. 0200 — **Sender's Copy**

1 From (please print and press hard)

Date 5/19/98 — Sender's FedEx Account Number 111-343-306

Sender's Name David Strand — Phone (612) 490-1405

Company Leggette Brashears & Graham

Address 1210 W. County Road E — Dept/Floor/Suite/Room

City St. Paul — State MN — ZIP 55112

2 Your Internal Billing Reference Information (Optional) (First 24 characters will appear on invoice) 3chrgy/dayton

3 To (please print and press hard)

Recipient's Name Kai Hanson — Phone (608) 833-5555

Company Leggette Brashears & Graham

☐ Check here if residence (Extra charge applies for FedEx Express Saver)

Address 6525 Grand Teton Plaza (To "HOLD" at FedEx location, print FedEx address here) — Dept./Floor/Suite/Room

City Madison — State WI — ZIP 53719

For HOLD at FedEx Location check here
☐ Hold Weekday (Not available with FedEx First Overnight)
☐ Hold Saturday (Not available at all locations) (Available for FedEx Priority Overnight and FedEx 2Day only)

For WEEKEND Delivery check here (Extra Charge. Not available to all locations)
☐ Saturday Delivery (Available for FedEx Priority Overnight and FedEx 2Day only)
☐ NEW Sunday Delivery (Available for FedEx Priority Overnight only)

Service Conditions, Declared Value, and Limit of Liability – By using this Airbill, you agree to the service conditions in our current Service Guide or U.S. Government Service Guide. Both are available on request. SEE BACK OF SENDER'S COPY OF THIS AIRBILL FOR INFORMATION AND ADDITIONAL TERMS. We will not be responsible for any claim in excess of $100 per package whether the result of loss, damage, or delay, non-delivery, misdelivery, or misinformation, unless you declare a higher value, pay an additional charge, and document your actual loss in a timely manner. Your right to recover from us for any loss includes intrinsic value of the package, loss of sales, interest, profit, attorney's fees, costs, and other forms of damage, whether direct, incidental, consequential, or special, and is limited to the greater of $100 or the declared value but cannot exceed actual documented loss. The maximum declared value for any FedEx Letter and FedEx Pak is $500. Federal Express may, upon your request, and with some limitations, refund all transportation charges paid. See the FedEx Service Guide for further details.

4a Express Package Service *Packages under 150 lbs.* Delivery commitment may be later in some areas
☐ FedEx Priority Overnight (Next business morning) ☐ FedEx Standard Overnight (Next business afternoon)
☐ FedEx First Overnight (Earliest next business morning delivery to select locations) (Higher rates apply)
☒ FedEx 2Day (Second business day) ☐ FedEx Express Saver (Third business day)
FedEx Letter Rate not available. Minimum charge: One pound rate

4b Express Freight Service *Packages over 150 lbs.* Delivery commitment may be later in some areas
☐ FedEx Overnight Freight (Next business day) ☐ FedEx 2Day Freight (Second business day) ☐ FedEx Express Saver Freight (Up to 3 business days)
(Call for delivery schedule. See back for detailed descriptions of freight services.)

5 Packaging ☐ FedEx Letter ☐ FedEx Pak (Declared value limit $500) ☐ FedEx Box ☐ FedEx Tube ☒ Other Pkg.

6 Special Handling (One box must be checked)
Does this shipment contain dangerous goods?* ☐ No ☐ Yes (As per attached Shipper's Declaration) ☐ Yes (Shipper's Declaration not required)
☐ Dry Ice — Dry Ice, 9, UN 1845 ____ kg ☐ Cargo Aircraft Only
*Dangerous Goods cannot be shipped in FedEx packaging.

7 Payment
Bill to: ☒ Sender (Account No. in Section 1 will be billed) ☐ Recipient ☐ Third Party ☐ Credit Card ☐ Cash/Check
(Enter FedEx Account No. or Credit Card No. below)
FedEx Account No.
Credit Card No. — Exp. Date

Total Packages	Total Weight	Total Declared Value*	Total Charges
1	19	$ .00	$

*When declaring a value higher than $100 per shipment, you pay an additional charge. See SERVICE CONDITIONS, DECLARED VALUE, AND LIMIT OF LIABILITY section for further information.

8 Release Signature *Sign to authorize delivery without obtaining signature.*

Your signature authorizes Federal Express to deliver this shipment without obtaining a signature and agrees to indemnify and hold harmless Federal Express from any resulting claims.

322

Rev. Date 12/97 Part #153024 ©1994-97 FedEx PRINTED IN U.S.A.

Questions?
Call 1·800·Go·FedEx® (800)463-3339

The World On Time

FedEx USA Airbill — Tracking Number 802495348 4 — **Sender's Copy**

1 From (please print)

Date 4/21/98 — Sender's FedEx Account Number 1844-0598-6

Sender's Name Michael Brahrd — Phone (937) 898-1120

Company Campus Chem — Dept./Floor/Suite/Room

Address 501 Madison Ave.

City Cary — State NC — Zip 27513

2 Your Internal Billing Reference Information (Optional) (First 24 characters will appear on invoice)

3 To (please print)

Recipient's Name Cindy Arnold — Phone (740) 373-4071

Company Kemron — Dept./Floor/Suite/Room

Address 109 Star Lite Park — (No P.O. Boxes or Zip Codes) — ☐ For "HOLD" at FedEx location, print FedEx address here

City Marietta — State OH — Zip 45750

For "HOLD" Service check here ☐ Weekday ☐ Saturday (Not available with FedEx First Overnight) (Not available at all locations)

For Saturday Delivery check here (Extra Charge. Not available to all locations) (Not available with FedEx First Overnight or FedEx Standard Overnight)

Service Conditions, Declared Value, and Limit of Liability – By using this Airbill, you agree to the service conditions in our current Service Guide or U.S. Government Service Guide. Both are available on request. See back of Sender's Copy of this airbill for information and additional terms. We will not be responsible for any claim in excess of $100 per package whether the result of loss, damage, or delay, non-delivery, misdelivery, or misinformation, unless you declare a higher value, pay an additional charge, and document your actual loss in a timely manner. Your right to recover from us for any loss includes intrinsic value of the package, loss of sales, interest, profit, attorney's fees, costs, and other forms of damage, whether direct, incidental, consequential, or special, and is limited to the greater of $100 or the declared value but cannot exceed actual documented loss. The maximum declared value for any FedEx Letter and FedEx Pak is $500. Federal Express may, upon your request, and with some limitations, refund all transportation charges paid. See the FedEx Service Guide for further details.

4 Service
☒ FedEx Priority Overnight (Next business morning) ☐ FedEx Standard Overnight (Next business afternoon) ☐ FedEx 2Day (Second business day)
☐ FedEx Gov Overnight (Authorized user only)
☐ FedEx Overnight Freight ☐ FedEx 2Day Freight
(For packages over 150 pounds. Call for delivery schedule.)
☐ NEW FedEx First Overnight (Earliest next business morning delivery to select locations) (Higher rates apply)
*Delivery commitment may be later in some areas.

5 Packaging ☐ FedEx Letter* ☐ FedEx Pak* ☐ FedEx Box ☐ FedEx Tube ☒ Other Packaging
*Declared value limit $500

6 Special Handling
Does this shipment contain dangerous goods? ☐ Yes (As per attached Shipper's Declaration) ☐ Yes (Shipper's Declaration not required)
☐ Dry Ice — Dry Ice, 9, UN 1845 ____ kg ☐ Cargo Aircraft Only
(Dangerous Goods Shipper's Declaration not required)

7 Payment
Bill to: ☒ Sender (Account No. in Section 1 will be billed) ☐ Recipient ☐ Third Party ☐ Credit Card ☐ Cash/Check
(Enter FedEx account no. or Credit Card no. below)
FedEx Account No.
Credit Card No. — Exp. Date

Total Packages	Total Weight	Total Declared Value*	Total Charges
		$ .00	$

*When declaring a value higher than $100 per shipment, you pay an additional charge. See SERVICE CONDITIONS, DECLARED VALUE AND LIMIT OF LIABILITY section for further information.

8 Release Signature

Your signature authorizes Federal Express to deliver this shipment without obtaining a signature and agrees to indemnify and hold harmless Federal Express from any resulting claims.

232

Rev. Date 7/95 • PART #147381 ©1994-95 FedEx • PRINTED IN U.S.A.

Questions?
Call 1·800·Go·FedEx

The World On Time

352-RED (7/86)G

FROM
QUANTERRA ENVIRONMENTAL
4101 SHUFFEL DR NW
NORTH CANTON OH 44720

4314770 810
These No.'s MUST match

Bill To | Seq. No. 5 | Origin CAK | Shipment No. 4314770-810

TO
FAIRFIELD INN
DAVID STRAND/COMPUCHEM
6960 MILLER LANE
DAYTON OH
3304979396
DAVID STRAND/GUEST
Zip 45414

Service

ORIGIN

Billing Ref. C389977 GN
Weight 21 LB
Sent By AL HAIDET
Dims 330-497-9396

004314770 810

GLOBE TICKET

352-RED (7/86)G

FROM
QUANTERRA ENVIRONMENTAL
4101 SHUFFEL DR NW
NORTH CANTON OH 44720

4314770 714
These No.'s MUST match

Bill To | Seq. No. 4 | Origin CAK | Shipment No. 4314770-714

TO
FAIRFIELD INN
DAVID STRAND/COMPUCHEM
6960 MILLER LANE
DAYTON OH
3304979396
DAVID STRAND/GUEST
Zip 45414

Service

ORIGIN

Billing Ref. C389977 GN
Weight 21 LB
Sent By AL HAIDET
Dims 330-497-9396

004314770 714

GLOBE TICKET AND LABEL COMPANY 6-02118

Polish Country Club
Dewcese Park
Northridge
North Plaza Shopping Center
Stillwater River
Triangle Park
Island Park
Kettering Field
Patterson Park
Mad River
Grandview Hospital And Medical Center
Deeds Park
Washington Playground
Dayton Art Institute
Sinclair College
Burkhardt Center
Chamber Of Commerce
Dayton
Sinclair Community College
Convention Visitors Center
Bomberger Park
Linden Playground
St Josephs Orphans Home
Highland Park
St Elizabeth Medical Center
Wolf Creek
NEEDMORE
WEBSTER
WAGONER FORD
NORTH BEND
© 1995 DeLorme

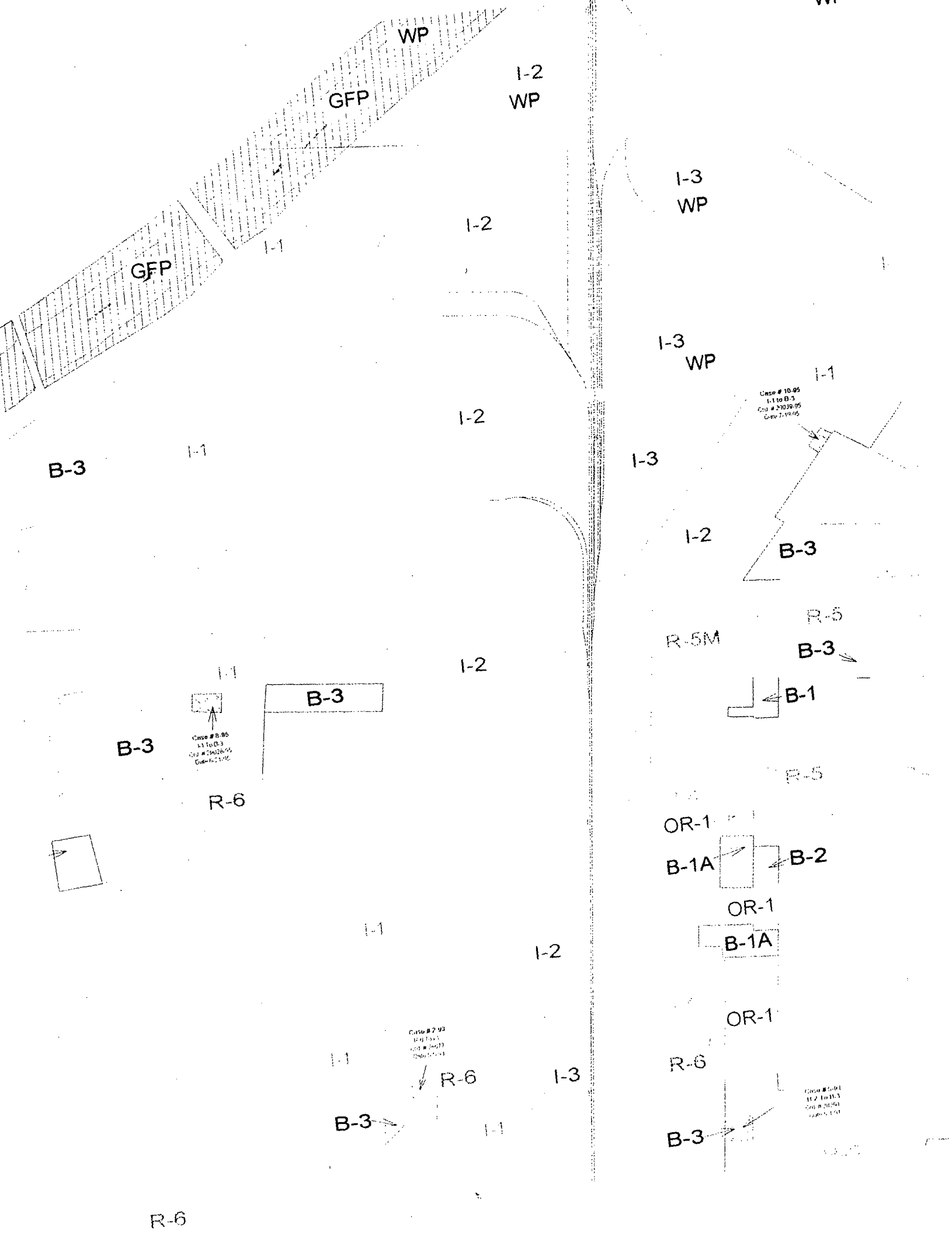
WP
I-2
WP
GFP
I-3
WP
I-2
I-1
GFP
I-3
WP
I-1
I-2
I-1
B-3
I-3
I-2
B-3
R-5
R-5M
B-3
I-1
I-2
B-3
B-1
B-3
R-6
R-5
OR-1
B-1A
B-2
OR-1
B-1A
I-1
I-2
OR-1
I-1
R-6
I-3
R-6
B-3
I-1
B-3
R-6

0 2000

SCALE IN FEET

QUADRANGLE LOCATION

U.S.G.S. TOPOGRAPHIC

DAYTON NORTH, OHIO

7.5 MINUTE QUADRANGLE

DAYTON THERMAL PRODUCTS PLANT

DAYTON, OHIO

AREA LOCATION MAP

DATE	REVISED
FILE:	

PREPARED BY:

LEGGETTE, BRASHEARS & GRAHAM, INC.
Professional Ground-Water and Environmental Services
Northpark Corporate Center
1210 W. County Road E, Suite 700
St. Paul, MN 55112
(612) 490-1405

DATE: JULY 1997 FIGURE: 1

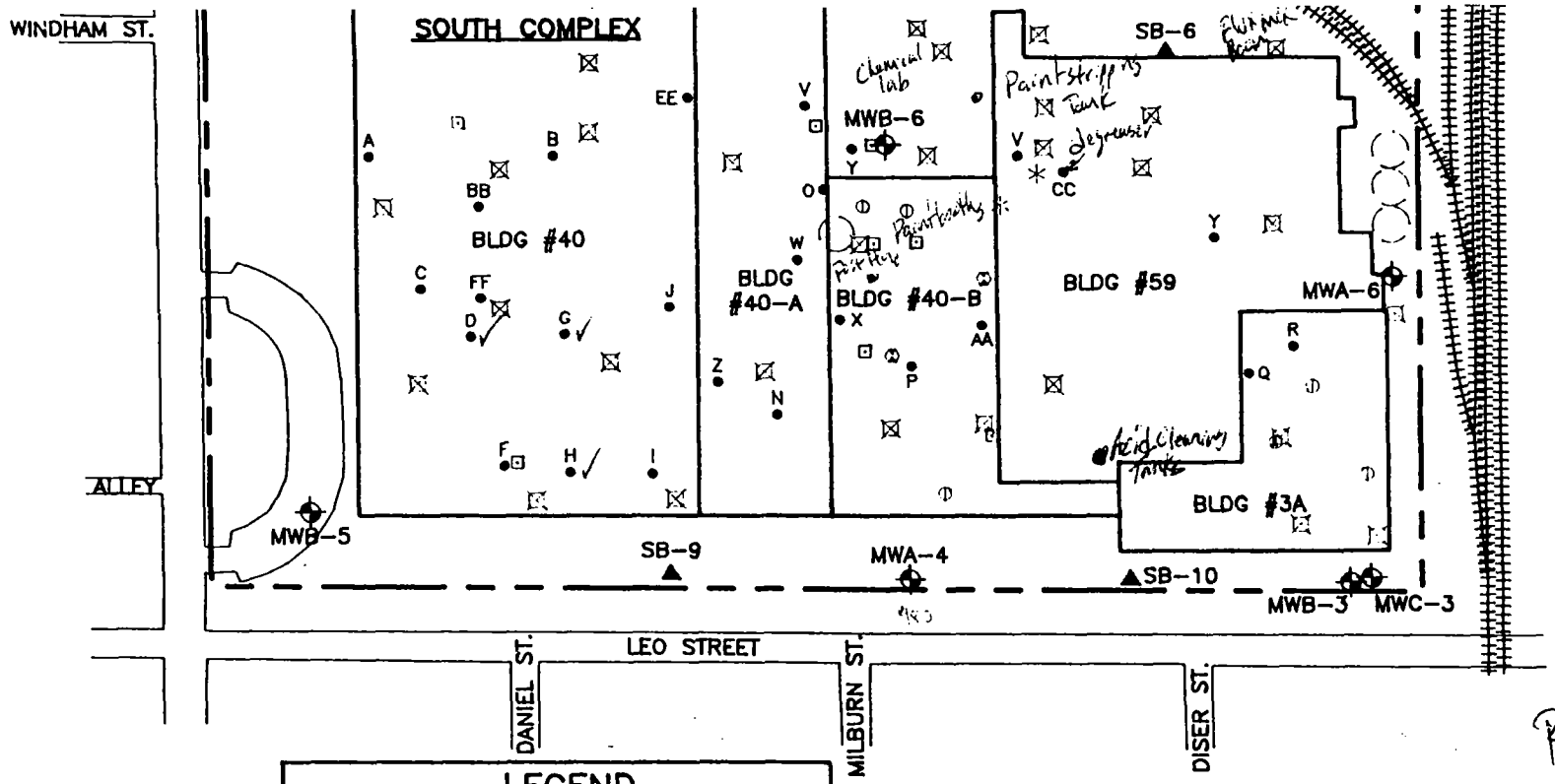

Red per Denny Morrow 5/98

LEGEND

- WELL LOCATION
- SOIL BORING LOCATION
- WATER SUPPLY WELL
- PROCESS WASTEWATER SUMP
- WASTE OIL SUMP
- HAZARDOUS WASTE GENERATION OR ACCUMULATION AREA
- UNDERGROUND STORAGE TANK
- ABOVE GROUND STORAGE TANK AREA
- INDUSTRIAL CLEANING SOLUTION TANKS (250–500 GALLON)
- F• PROCESS UNIT & LOCATION

PROCESS EQUIPMENT DESCRIPTION

A	FIRST IMPREGNATION, LOCTITE SYSTEM	R	NEW WASHER
B	SHAFT ASSEMBLY	S	WASHER TANKS
C	WEST COOLANT PIT	T	CLEANER TANKS
D	CARGILL WASHER	U	FLUSH WASHER SYSTEM
E	PISTON WASHER	V	MANPRO DEGREASER
F	SOUTH SHELL WASHER	W	PLATE/FIN EVAPORATOR DEGREASER
G	EAST COOLANT PIT	X	PARTS DEGREASER
H	SOUTH COOLANT PIT	Y	PLATING OPERATION
I	SECOND IMPREGNATION, LOCTITE SYSTEM	Z	SWASHPLATE HEAT TREATMENT MACHINE
J	NORTH COOLANT PIT	AA	NEW DETRIX DEGREASER
K	SHAFT WASHER	BB	COMPRESSOR PARTS DEGREASER
L	CLUTCH RETAINER WASHER	CC	DIP TANK
M	STEEL MACHINING COOLANT PIT	DD	DEGREASER (TCA)
N	PHOSPHATING WASHER	EE	DETREX DEGREASER
O	CLEANER TANKS	FF	FREON DEGREASER
P	PAINT BOOTH	GG	XYLOL-BASED PAINT BOOTH
Q	PAINT BOOTH	HH	VAPOR DEGREASER

SOURCE: CLEAN TECH, INC.

0 200

APPROX. SCALE IN FEET

DATE	REVISED

Prepared By:

LEGGETTE, BRASHEARS & GRAHAM, INC.
Professional Ground-Water and Environmental Services
Northpark Corporate Center
1210 W. County Road E, Suite 700
St. Paul, MN 55112
(612) 490-1405

DAYTON THERMAL PRODUCTS PLANT
DAYTON, OHIO

PROCESS WASTEWATER & WASTE OIL SUMPS

FILE:	3CHDA02I.DWG	DATE:	JULY 1997	FIGURE:	3

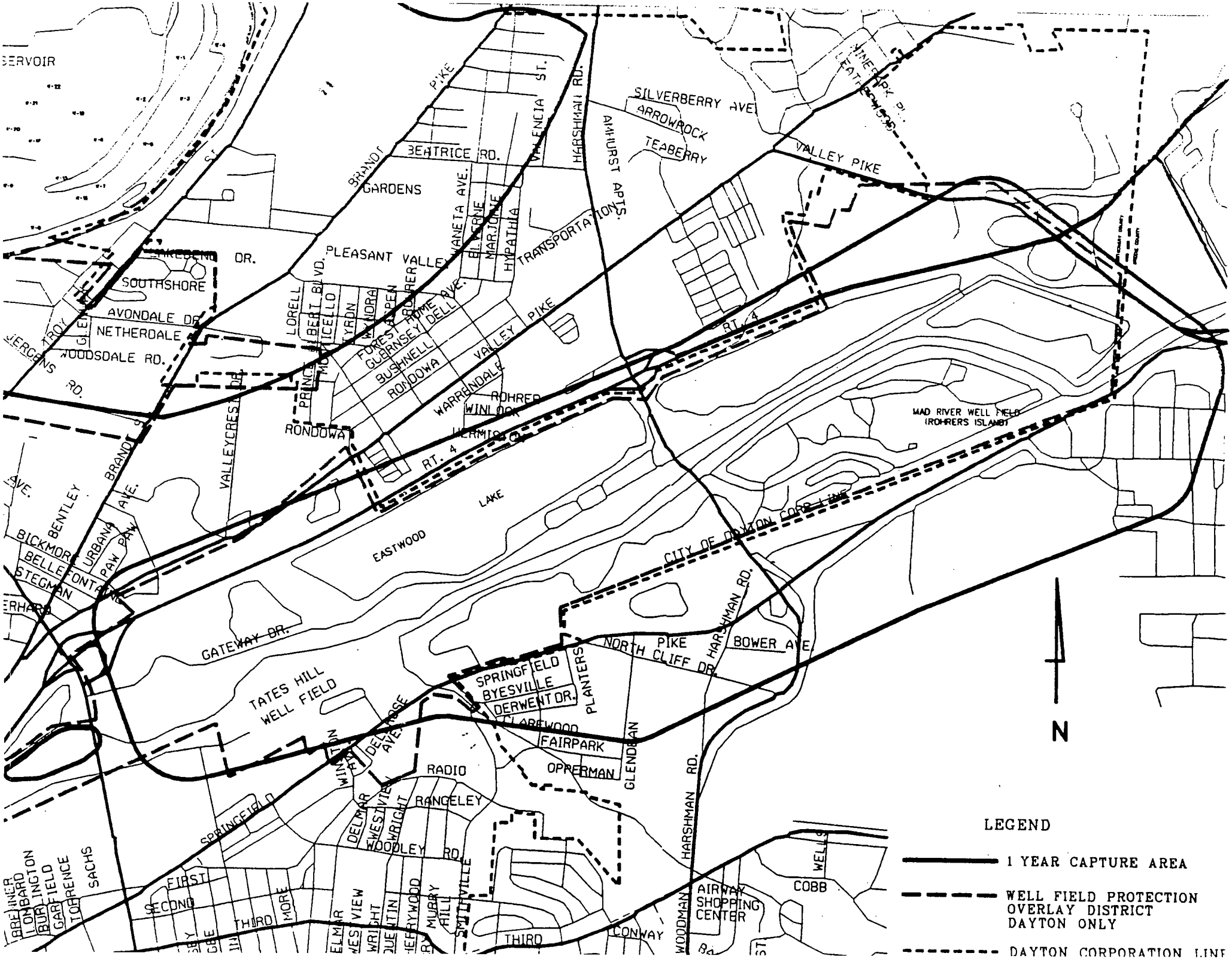
SERVOIR
BRANDT PIKE
BEATRICE RD.
GARDENS
PLEASANT VALLEY
DR.
SOUTHSHORE
AVONDALE DR.
NETHERDALE
WOODSDALE RD.
JERGENS RD.
TROY
GLEN
LORELL
PRINCETON BLVD.
MONTICELLO
YARDN
WANDRA
FOREST GREEN
GUERNSEY
DELL
BUSHNELL
RONDOWA
VALLEY PIKE
WARRENDALE
ROHRER
WINLOCK
HERMITAGE
RONDOWA
VALLEYCREST DR.
BRANDT
AVE.
BENTLEY
BICKMORE
BELLEFONTAINE
URBANA
PAW PAW
STEGMAN
ERHARD
LAKE
EASTWOOD
GATEWAY DR.
TATES HILL
WELL FIELD
SPRINGFIELD
BYESVILLE
DERWENT DR.
CLARKWOOD
FAIRPARK
OPPERMAN
PLANTERS
GLENDEAN
NORTH CLIFF DR.
PIKE
BOWER AVE.
HARSHMAN RD.
RADIO
RANGELEY
DELMAR
WESTVIEW
WOODLEY RD.
WRIGHT
DUETTIN
HEYWOOD
MUBRY HILL
SPRINGFIELD
FIRST
SECOND
THIRD
MORE
THIRD
CONWAY
WOODMAN
AIRWAY SHOPPING CENTER
COBB
WELLS
SACHS
LORENCE
GARFIELD
LOMBARD
BURLINGTON
BELLINER
HARSHMAN RD.
AMHURST APTS.
SILVERBERRY AVE.
ARROWROCK
TEABERRY
VALLEY PIKE
TRANSPORTATION
VALENCIA ST.
ANETA AVE.
BLYERNE
MARJORIE
HYPATHIA
RT. 4
RT. 4
MAD RIVER WELL FIELD
(ROHRERS ISLAND)
CITY OF DAYTON CORP. LINE
N
LEGEND
1 YEAR CAPTURE AREA
WELL FIELD PROTECTION OVERLAY DISTRICT DAYTON ONLY
DAYTON CORPORATION LINE

COMPUCHEM

a division of Liberty Analytical Corp.

EPA Region 5 Records Ctr.
350068

ENTERED IN DATABASE
BY/DATE DVS 10/29/98
CHECKED BY DVS/DJS
DATE 11/3/98

OCT 28 1998

27/OCT/98

LEGGETTE BRASHEARS & GRAHAM
ATTN: MR. KEN VOGEL
1210 WEST COUNTY Rd. E, STE700
ST. PAUL, MN 55112

Subject: Report of Data - Account Number# 501112 Order# 33902

ATTN: MR. KEN VOGEL

Enclosed are the results of analytical work performed in accordance with the referenced account number.

This report covers 20 sample(s) appearing on the attached listing.

Thank you for selecting CompuChem Environmental for your sample analysis. If you should have questions or require additional analytical services please contact your representative at 1-800-833-5097.

Sincerely,

Diane Ellmer

CompuChem Environmental
a division of Liberty Analytical

Attachment

501 Madison Avenue ■ Cary, N.C. 27513 ■ Tel 919-379-4100 ■ Fax 919-379-4050

COMPUCHEM
a division of Liberty Analytical Corp.

27/OCT/98

LEGGETTE BRASHEARS & GRAHAM
ATTN: MR. KEN VOGEL
1210 WEST COUNTY Rd. E, STE700
ST. PAUL, MN 55112

ACCOUNT #: 501112

CC#	SAMPLE-ID	RECEIPT DATE
914726	E101498-1	10/17/98
914729	MWC-1	10/17/98
914730	MWB-1	10/17/98
914731	PZ-22I	10/17/98
914732	MWB-4	10/17/98
914733	PZ-21I	10/17/98
914734	MW-19S	10/17/98
914735	PZ-19I	10/17/98
914736	PZ-20D	10/17/98
914737	MW-18S	10/17/98
914738	MWB-2	10/17/98
914739	MWC-2	10/17/98
914740	MW-7S	10/17/98
914741	PZ-7I	10/17/98
914742	MWB-5	10/17/98
914743	MWA-5	10/17/98
914744	MWA-6	10/17/98
914745	PZ-13I	10/17/98
914746	MWA-6DUP	10/17/98
914758	MWA-3	10/17/98

TOTAL NUMBER OF SAMPLES = 20

501 Madison Avenue ■ Cary, N.C. 27513 ■ Tel 919-379-4100 ■ Fax 919-379-4050

CompuChem
a Division of Liberty Analytical
501 N. Madison Avenue
Cary, NC 27513

SDG NARRATIVE
CASE:33902
SDG:25401
CONTRACT:501112

SAMPLE IDENTIFICATIONS: PZ-22I PZ-21I PZ-19I PZ-20D PZ-7I PZ-13I MWC-1 MWB-1 MWB-4 MW-19S MW-18S MWB-2 MWC-2 MW-7S MWB-5 MWA-5 MWA-6 MWA-6DUP MWA-3 E101498-1

The twenty(20) water samples listed above were received intact, properly refrigerated,with proper chain of custody(COC) documentation on October 17,1998. The samples were prepared and analyzed following SW846 method 8260 25ml purge. All of these samples were submitted for volatile only analysis.

VOLATILES:

Analysis holding time requirements were met for these samples. The majority of samples contained one or more of the target analytes 1,1,1-trichloroethane, trichloroethene, tetrachloroethene, acetone, 1,1-dichlorethene, 1,1-dichloroethane and cis-1,2-dichloroethene. Nine out of the twenty submitted samples were diluted due to one or more of these target analytes.

Sample MWA-6 was originally analyzed at a 25:1 dilution based on screen data, however trichloroethene exceeded the calibration range. The sample was further diluted 100:1 to bring this analyte into calibration range. Sample MWB-1 was initially analyzed neat and acetone exceeded the calibration range. A reanalysis at a 1.9:1 dilution brought this analyte into range. We are reporting both analyses for both of these samples so that no TCL data would be lost due to dilution.

No Tentatively Identified Compound (TIC) data is provided as requested by the client.

All of the surrogates met recovery criteria and all of the internal standards met response and retention time criteria in the analyses of these samples.

The associated method blanks met all quality control criteria and all contained methylene chloride below the reporting limit.

The associated Laboratory Control Samples(LCS's) met all QC acceptance limits.

The duplicate matrix spikes generated from MWA-3 met all QC precision and accuracy criteria with one exception. The spike compound 1,1,1-trichloroethane exceeded the advisory RPD limit.

I certify that this data package is in compliance with the terms and conditions of the contract, both technically and for completeness, for other than the conditions listed above. Release of the data contained in this hardcopy data package and in the computer-readable data submitted on floppy diskette has been authorized by the Laboratory Manager or his designee, as verified by the following signature.

Roy M. Sutton
Development Chemist
October 27, 1998

GC and GC/MS Column and Trap Specifications Table

COLUMNS

Brand Name	Coating Material	ID (mm)	Film Thickness (um)	Length (m)
GC Laboratory				
Restek	RTX-1701	0.53	0.5	30
J & W	DB-608	0.53	0.83	30
Restek	CLPesticides	0.53	0.5	30
Restek	CLPesticides II	0.53	0.42	30
GC/MS Volatiles Laboratory				
J & W	DB-624	0.53	3.0	30/75
Supelco	SPB-624	0.53	3.0	75
GC/MS Semivolatiles Laboratory				
J & W	DB-5	0.32	1.0	30
Hewlett Packard	HP5-MS	0.25	0.25	30

TRAP

GC/MS Volatiles Laboratory	
	* 15 cm of 2,6-diphenylene oxide polymer (Tenax) * 1 cm of methyl silicone packing (OV-1 coating) * 8 cm of silica gel * 0.5 cm of glass wool at each end

Notification Regarding Manual Editing/Integration Flags

In some instances, manual adjustments to the software output are necessary to provide accurate data. These adjustments are performed by the data reviewer, GC/MS operator, or GC chemist. An Extracted Ion Current Profile (EICP) or a GC chromatographic peak has been provided for the manual integration of each compound to demonstrate the accuracy of that process. Adjustments are flagged on the quantitation report in the far right column beyond the FINAL concentration for GC/MS analysis, and in the "Flags" column for GC analysis. The manual editing/integration flags are:

M - Denotes that a manual integration has been performed for this compound. The manual integration was performed in order to provide the most accurate area count as possible for the peak.

H - Denotes that the data reviewer, GC/MS operator, or GC Chemist has chosen an alternate peak within the retention time window from that chosen by the software for that compound. No manual integration is performed in choosing an alternate peak. The software still performs the integration.

MH - Denotes that an alternate peak has been chosen within the retention time window from that chosen by the software for that compound and also a manual integration of the chosen peak has been performed. The manual integration was performed in order to provide the most accurate area count possible for the peak.

L - Denotes that the data reviewer or GC/MS operator has selected an alternate library search. This is typically done when an additional tentatively identified compound (TIC) has been added to the number of peaks searched. No manual integration is performed in choosing an alternate peak. The software still performs the integration.

ML - Denotes that an alternate library search has been selected and a manual integration has also been performed. This is typically done when an additional TIC has been added and the TIC peak also required a manual integration.

With the introduction of the current EPA CLP SOW (Document Number OLM03.0, plus revisions) additional explanations for manual editing/integration are required. In the accompanying raw data packages, additional codes have been applied to the "M" flag and carry the following meanings;

M1 - The compound was not found by the automatic integration routine.

M2 - The compound was incorrectly integrated by the automatic integration routine.

M3 - The co-eluting compounds were incorrectly integrated by the automatic integration routine.

These codes will appear in the GC/MS and GC data packages.

Robert E. Meierer
Vice President

DATA REPORTING QUALIFIERS

On the Form I, under the column labeled "Q" for qualifier, each result is flagged with the specific data reporting qualifiers listed below, as appropriate. Up to five qualifiers may be reported on Form I for each compound. The qualifiers used are:

U : This flag indicates the compound was analyzed for but not detected. The Contract Required Quantitation Limit (CRQL) (or Reporting Limit) will be adjusted to reflect any dilution and, for soils, the percent moisture.

J : This flag indicates an estimated value. The flag is used as detailed below:

1. When estimating a concentration for tentatively identified compounds (TICs) where a response factor of 1.0 is assumed for the TIC analyte,

2. When the mass spectral and retention time data indicate the presence of a compound that meets the volatile and semivolatile GC/MS identification criteria, and the result is less than the CRQL (or Reporting Limit) but greater than zero, and

3. When the retention time data indicates the presence of a compound that meets the pesticide/Aroclor or other GC or HPLC identification criteria, and the result is less than the CRQL (or Reporting Limit) but greater than zero. For example, if the CRQL (or Reporting Limit) is 10 µg/L, but a concentration of 3 µg/L is calculated, it is reported as 3J.

N : This flag indicates presumptive evidence of a compound. This flag is only used for TICs, where the identification is based on a mass spectral library search. For generic characterization of a TIC such as 'chlorinated hydrocarbon', the N flag is not used.

P : In the EPA's Contract Laboratory Program (CLP), this flag is used for a pesticide/Aroclor target analyte, when there is greater than 25% difference for detected concentrations between the two GC columns. The lower of the two values is reported on Form I and flagged with a P.
For SW-846 GC and HPLC analyses, when the Relative Percent Difference (RPD) is greater than 40% and there is no evidence of chromatographic anomalies or interferences, then the higher of the two values is reported and flagged with a P. When the RPD is equal to or less than 40%, our policy is to also report the higher of the two values, although the choice could be a project specific issue.

C : This flag applies to GC or HPLC results where the identification has been confirmed by GC/MS. If GC/MS confirmation was attempted but was unsuccessful, this flag is not applied; a laboratory-defined flag is used instead (see the X/Y/Z qualifier.)

DATA REPORTING QUALIFIERS (continued)

B : This flag is used when the analyte is found in the associated blank as well as in the sample. It indicates probable blank contamination and warns the data user to take appropriate action. This flag is used for a TIC as well as for a positively identified target compound. The combination of flags BU or UB is not an allowable policy. Blank contaminants are flagged B only when they are detected in the sample.

E : This flag identifies compounds whose concentrations exceed the upper level of the calibration range of the instrument for that specific analysis. If one or more compounds have a response greater than the upper level of the calibration range, the sample or extract will be diluted and reanalyzed. All such compounds with a response greater than the upper level of the calibration range will have the concentration flagged with an E on Form I for the original analysis.

D : If a sample or extract is reanalyzed at a higher dilution factor, for example when the concentration of an analyte exceeds the upper calibration range, the DL suffix is appended to the sample number on Form I for the more diluted sample, and **all** reported concentrations on that Form I are flagged with the D flag. This flag alerts data users that any discrepancies between the reported concentrations may be due to dilution of the sample or extract.

NOTE 1: The D flag is not applied to compounds which are not detected in the sample analysis i.e. compounds reported with the CRQL (or Reporting Limit) and the U flag.

NOTE 2: Separate Form Is are used for reporting the original analysis (Client Sample No. XXXXX) and the more diluted sample analysis (Client Sample No. XXXXXDL) i.e. the results from both analyses <u>are not combined</u> on a single Form I.

A : This flag indicates that a TIC is a suspected aldol-condensation product.

S : This flag indicates that an analyte was detected by a single column GC analysis but the result was below the Reporting Limit. This flag is only used when clients request a second (confirmation) column analysis after detecting an analyte above the Reporting Limit in the initial, single column analysis. This flag alerts the data user that only an analyte was detected below the Reporting Limit and a second (confirmation) analysis was not performed.

X/Y/Z : Other specific flags may be required to properly define the results. If used, the flags will be fully described in the SDG Narrative. The laboratory-defined flags are limited to X, Y and Z.

CHRYSLER CORPORATION

Chain-of-Custody

03732 A

4th Quarter GW Sampling

CompuChem 501 Madison Avenue Cary, NC 27513 Phone Number: 1-800-833-5097 Fax Number: (919) 379-4050	Project Name: DAYTON THERMAL PROD. Site Location: Dayton, OH Site Code: SC001 RFA Number: YGOP9800254-T Chrysler PM: Gary Stanczuk	Consultant: Levine Hz, Brisbegris Graham, Inc. Address: 1213 W. Co Rd. E St Paul, Mn. 55112 Consultant PM: Ken Vogel Phone: 651-490-1405 Fax: 651-490-1006	

Turn-around Time Request:
24 calendar hrs.
48 calendar hrs.
10 days
28 days

Data Package Deliverables: (circle)
Chrysler Level 1
Chrysler Level 2
Other (specify):

Matrix Codes
S - Soil
GW - Groundwater
Sed. - Sediment
O - Other (specify)
SW - Surface Water
A - Air

Field Sample Identification	Date Collected	Time Collected	Grab (G) or Composite (C)	Matrix Code	Total # of Containers	8260	Lab Use Only: Volatiles pH <2	Metals pH < 2	Cyanide pH > 12	Other ___	Remarks
E101498-1	10/14/98	8:30	G	GW	3	X					Equipment Blank
MWC-1		8:40			3	X					
MWB-1		8:50			3	X					
PZ-22I		9:05			3	X					
MWB-4		9:40			3	X					
PZ-21I		9:50			3	X					
MW-19S		10:10			3	X					
PZ-19I		10:20			3	X					
PZ-20D		10:50			3	X					
MW-18S		11:04			3	X					

Sampler(s): Daniel Russell

Bottles Relinquished under Airbill No. 4287 4957 7498

Samples Relinquished under Airbill No. 202 495 3473

Temperature (corrected) 4.0 open & 10:40am 10/17/98 DE

Relinquished by: Daniel Russell	Date: 10/15/98	Time:	Received by: Natalie Scott	Date: 10-16-98	Time: 1213	Custody Seal Intact? Yes No
Relinquished by:	Date:	Time:	Received by:	Date:	Time:	Custody Seal Intact? Yes No
Relinquished by:	Date:	Time:	Received for Laboratory by: Diane Ellmore	Date: 10/17/98	Time: 10:40am	Custody Seal Intact? Yes No

Cooler ID # 402

Is RFA sampling complete? Yes No

Chrysler Corporation 800 Chrysler Drive, CIMS 482-00-51, Auburn Hills, Michigan 48326-2757

Distribution: White copy: Data package Yellow: Retained by laboratory Pink: Retained by sampler

Samples placed in storage ID 4 DE 10/17/98 11:30am

C/C Sealed
Samples intact
Cooler temp 1°

Revision No. 1
Created September 23, 1997

CHRYSLER CORPORATION

Chain-of-Custody

03733 A

4th Quarter GW Sampling

CompuChem
501 Madison Avenue
Cary, NC 27513
Phone Number: 1-800-833-5097
Fax Number: (919) 379-4050

Project Name: Dayton Thermal Products
Site Location: Dayton, OH.
Site Code: SC001
RFA Number: YGQP9800254-T
Chrysler PM: Gary Stanczuk

Consultant: Langhe, Boisheyer & Graham, Inc.
Address: 1270 W. Co. Rd E
St. Paul, MN 55112
Consultant PM: Ken Vogel
Phone: 651-490-1405 Fax: 651-490-1006

Turn-around Time Request:
24 calendar hrs.
48 calendar hrs.
10 days
28 days

Data Package Deliverables: (circle)
Chrysler Level 1
Chrysler Level 2
Other (specify):

Matrix Codes
S - Soil
SW - Surface Water
GW - Groundwater
A - Air
Sed. - Sediment
O - Other (specify)

Field Sample Identification	Date Collected	Time Collected	Grab (G) or Composite (C)	Matrix Code	Total # of Containers	8260	Volatiles pH <2	Metals pH <2	Cyanide pH > 12	Other	Remarks
MW B-2	10/14/98	11:30	G	GW	3	X					
MW C-2		11:45			3	X					
MW-75		13:00			3	X					
PZ-7I		13:10			3	X					
MW B-5		13:20			3	X					
MW A-5		13:30			3	X					
MW A-6		13:55			3	X					
PZ-13I		13:40			3	X					
MW A-6 Dup		13:56			3	X					
Trip Blank 10/14/98					2	X					

Lab Use Only: Volatiles pH <2 | Metals pH <2 | Cyanide pH > 12 | Other ____

Sampler(s): Daniel Prescott

Bottles Relinquished under Airbill No. 4287 4957 7498

Samples Relinquished under Airbill No. 802495347 3

Temperature (corrected) 4.0 C

Relinquished by:	Date:	Time:	Received by:	Date:	Time:	Custody Seal Intact?
Daniel Prescott	10/15/98		Natalie Scott	10-16-98	1213	Yes No
						Yes No
			Received for Laboratory by: Diane Ellmore	10/17/98	10:40am	Yes No

Cooler ID # 402

Is RFA sampling complete? Yes No

Chrysler Corporation 800 Chrysler Drive, CIMS 482-00-51, Auburn Hills, Michigan 48326-2757

Distribution: White copy: Data package Yellow : Retained by laboratory Pink: Retained by sampler

Samples placed in storage
ID 4 DE 10/17/98 11:30am

C/C Sealed
Samples intact
Cooler temp 1°

Revision No. 1
Created September 23, 1997

CHRYSLER CORPORATION

Chain-of-Custody

03734 A

4th Qtr GW. Sampling

CompuChem
501 Madison Avenue
Cary, NC 27513
Phone Number: 1-800-833-5097
Fax Number: (919) 379-4050

Project Name: Dayton Thermal Products
Site Location: Dayton, OH
Site Code: SC001
RFA Number: YGQP9800254-T
Chrysler PM: Gary Stanczuk

Consultant: Lagrette, Brashears & Graham, Inc
Address: 1240 W. Co. Rd. E
St Paul, MN 55112
Consultant PM: Ken Vogel
Phone: 651-490-1405 Fax: 651-490-1405

Turn-around Time Request:
24 calendar hrs.
48 calendar hrs.
10 days
28 days

Data Package Deliverables: (circle)
Chrysler Level 1
Chrysler Level 2
Other (specify):

Matrix Codes
S - Soil
GW - Groundwater
Sed. - Sediment
O - Other (specify)
SW - Surface Water
A - Air

Field Sample Identification	Date Collected	Time Collected	Grab (G) or Composite (C)	Matrix Code	Total # of Containers	8260	Volatiles pH <2	Metals pH < 2	Cyanide pH > 12	Other ____	Remarks
PZ-12I	10/14/98	14:00	G	GW	3	X					
PZ-12D		14:10			3	X					
MW-15S		14:50			2	X					
EQ 1498-2		15:00			2	X					Equipment Blank
MW-15I *		15:01			2	X					On bottle PZ-15I time 15:01
MW-11S		15:15			2	X					
MW-11S Dup		15:16			2	X					
MWB-3		15:30			2	X					
MWC-3		15:40			2	X					
MWA-3		16:00			2	X					

Should read PZ-15I DE 10/14/98 per Dave Strand

Compound List-Parameter/Method/Bottle Type/Preservative

Sampler(s): Donald C. Frazell

Bottles Relinquished under Airbill No. 4287 4957 7498

Samples Relinquished under Airbill No. 802495346 2

Temperature (corrected) 4.0 C DE 10:10am 10/17/98

Relinquished by:	Date:	Time:	Received by:	Date:	Time:	Custody Seal Intact?
Donald C. Frazell	10/15/98		Natalie J. Booth	10-16-98	1213	Yes No

Cooler ID # 7

Is RFA sampling complete? Yes No

Received for Laboratory by: Dave Ellmore

Chrysler Corporation 800 Chrysler Drive, CIMS 482-00-51, Auburn Hills, Michigan 48326-2757

Distribution: White copy: Data package Yellow: Retained by laboratory Pink: Retained by sampler

Samples placed in Storage ID 4
DE 10/14/98
11:30am

C/C Sealed
Samples Intact
Cooler temp 6°
NB

Revision No. 1
Created September 23, 1997

CHRYSLER CORPORATION

Chain-of-Custody

03735 A

4th Qtr. GW. Sampling

CompuChem
501 Madison Avenue
Cary, NC 27513
Phone Number: 1-800-833-5097
Fax Number: (919) 379-4050

Project Name: Dayton Thermal Products
Site Location: Dayton, OH
Site Code: SC001
RFA Number: YGOF9800254-T
Chrysler PM: Gary Sanzuk

Consultant: Leggette, Brashears & Graham, Inc.
Address: 1210 W. Co. Rd. E
St Paul, MN. 55112
Consultant PM: Ken Vogel
Phone: 651-490-1905 Fax: 651-490-1006

Turn-around Time Request:
24 calendar hrs.
48 calendar hrs.
10 days
28 days

Data Package Deliverables: (circle)
Chrysler Level 1
Chrysler Level 2
Other (specify):

Compound List-Parameter/Method/Bottle Type/Preservative

Matrix Codes
S - Soil
SW - Surface Water
GW - Groundwater
A - Air
Sed. - Sediment
O - Other (specify)

Field Sample Identification	Date Collected	Time Collected	Grab (G) or Composite (C)	Matrix Code	Total # of Containers	8260	Lab Use Only: Volatiles pH <2	Metals pH < 2	Cyanide pH > 12	Other ____	Remarks
MWA-3 MS/MSD	10/14/98	16:01	G	GW	2	X					
PZ-14I	10/14/98	16:10			2	X					
MWA-2		16:25			2	X					
MWA-2 MS/MSD		16:26			2	X					
PZ-16D		16:30			2	X					
MWB-6	10/15/98	7:55			2	X					
MW-5S		8:15			2	X					
E101598-3		8:17			2	X					Equipment blank
PZ-8I		8:20			2	X					
PZ-8D		8:25			2	X					

Sampler(s): Donald Prescott

Bottles Relinquished under Airbill No. 4287 4957 7498

Samples Relinquished under Airbill No. 8024953462

Temperature (corrected) 4.0 C 10/17/98 10:40am

Relinquished by:	Date:	Time:	Received by:	Date:	Time:	Custody Seal Intact?
Donald Prescott	10/15/98		Natalie Booth			Yes No
						Yes No
			Received for Laboratory by: Diane Ellmore	10/17/98	10:40am	Yes No

Cooler ID # 7

Is RFA sampling complete? Yes No

Chrysler Corporation 800 Chrysler Drive, CIMS 482-00-51, Auburn Hills, Michigan 48326-2757

Distribution: White copy: Data package Yellow : Retained by laboratory Pink: Retained by sampler

C/C Sealed Samples intact
Cooler temp 6°

Samples placed in storage 1D
4 DE 10/17/98
11:30am

Revision No. 1
Created September 23, 1997

CHRYSLER CORPORATION

Chain-of-Custody

03736 A

4th Qtr. GW. Sampling

CompuChem
501 Madison Avenue
Cary, NC 27513
Phone Number: 1-800-833-5097
Fax Number: (919) 379-4050

Project Name: Dayton Thermal Products
Site Location: Dayton, OH
Site Code: SC001
RFA Number: YGQP98 00254-T
Chrysler PM: Gary Stanczak

Consultant: Leggette, Brashears & Graham, Inc
Address: 1210 W. Co. Rd. E
St. Paul, MN.
Consultant PM: Ken Vogel
Phone: 651-490-1405 Fax: 651-490-1006

10

Turn-around Time Request:
24 calendar hrs.
48 calendar hrs.
10 days
28 days

Data Package Deliverables: (circle)
Chrysler Level 1
Chrysler Level 2
Other (specify):

Compound List-Parameter/Method/Bottle Type/Preservative

Matrix Codes
S - Soil
SW - Surface Water
GW - Groundwater
A - Air
Sed. - Sediment
O - Other (specify) Sparge Water

Field Sample Identification	Date Collected	Time Collected	Grab (G) or Composite (C)	Matrix Code	Total # of Containers	8260	Lab Use Only: Volatiles pH <2	Metals pH < 2	Cyanide pH > 12	Other	Remarks
PZ-9D	10/15/98	8:50	G	GW	2	X					
MW-10S		9:30			2	X					
PZ-10I		9:35			2	X					
PZ-17D		10:10			2	X					
PZ-17I		10:20			2	X					
MWA-1		11:00			2	X					
MWA-4		14:15			2	X					
Sparge H2O		16:45		O	2	X	Time added per Dave Strand. DE 10/19/98				
MW-20S	10/14/98	10:45			3	X					

Sampler(s) Daniel Russell

Bottles Relinquished under Airbill No. 4287 4957 7498

Samples Relinquished under Airbill No. 802495 3462

Temperature (corrected) 4.0 C DE 10/17/98 10:40am

Relinquished by:	Date:	Time:	Received by:	Date:	Time:	Custody Seal Intact?
Daniel Russell	10/17/98					Yes No
						Yes No
			Received for Laboratory by: Diane Ellmore	10/17/98	10:40am	Yes No

Cooler ID # 7

Is RFA sampling complete? Yes No

Chrysler Corporation 800 Chrysler Drive, CIMS 482-00-51, Auburn Hills, Michigan 48326-2757

Distribution: White copy: Data package Yellow : Retained by laboratory Pink: Retained by sampler

Samples placed in storage
ID 4 DE 10/17/98 11:00am

C/C Sealed
Samples intact
Cooler temp 6
15

Revision No. 1
Created September 23, 1997

MEMORANDUM

To: Mark Bevan
Kenny McDaniel
Brian Neptune
Roy Sutton

From: Diane Ellmore

Date: October 19, 1998

Re: Case 33902

SDG 25401

CCN: 914740 ID corrected in LIMS. ID is now MW-7S

CCN: 914730 ID corrected in LIMS. ID is now MWA-6DUP

SDG 25403

CCN: 914888 Sample logged into LIMS on 10/19/98 due to ID discrepancy on COC verses bottle labels. Sample is backdated in LIMS to 10/17/98 (actual receipt date).

COMPUCHEM
a division of Liberty Analytical

LOG-IN VERIFICATION

Client: Chrysler Project: RFA 254

Case: 33902 Date Received: 10/17/98

Were all sample I.D.'s checked? Yes / No * see corrective action

Were all analyses on COC also on receipt log? Yes / No

Were any associated line item's missing? Yes / No

Were all parameter's logged in? Yes / No

Were correct method numbers received? Yes / No

Is any information absent from receiving log header? Yes / No

Were all blank lines on the receiving log z'ed out? Yes / No

Was TAT verified (quick turn line items used?) Yes / No

Was QC designated and verified? Yes / No / N/A

Is the field COC complete (signed/dated, etc)? Yes / No

Were all comments/issues recorded on COC? Yes / No

Signature: Diane Ellmore Date: 10/19/98

Corrective Action

Changed ID for MW-7S to MW-7S. Changed ID on COC 914730 from MWA-6 to MWA-6DUP. ~~Sample on~~ COC 914888 rec'd 10/19 & backdated to 10/17 due to ID discrepancy on COC & bottle labels

Completed By: Diane Ellmore Date: 10/19/98

LEGGETTE BRASHEARS & GRAHAM
ATTN: MR. KEN VOGEL
1210 WEST COUNTY Rd. E, STE700
ST. PAUL, MN 55112

RECEIVE DATE: 10/17/98
QUOTE NUMBER: 98-00070800000501112
ORDER NUMBER: 33902

SAMPLE ID	TURNAROUND** TIME	ANALYSIS	COMPUCHEM NUMBER
E101498-1	10	TCL Voa/Meth. 8260(25ml)/Water/Case ID	914726
E101498-2	10	TCL Voa/Meth. 8260(25ml)/Water/Case ID	914753
E101598-3	10	TCL Voa/Meth. 8260(25ml)/Water/Case ID	914764
MW-10S	10	TCL Voa/Meth. 8260(25ml)/Water/Case ID	914768
MW-11S	10	TCL Voa/Meth. 8260(25ml)/Water/Case ID	914754
MW-11SDUP	10	TCL Voa/Meth. 8260(25ml)/Water/Case ID	914755
MW-15S	10	TCL Voa/Meth. 8260(25ml)/Water/Case ID	914752
MW-18S	10	TCL Voa/Meth. 8260(25ml)/Water/Case ID	914737
MW-19S	10	TCL Voa/Meth. 8260(25ml)/Water/Case ID	914734
MW-20S	10	TCL Voa/Meth. 8260(25ml)/Water/Case ID	914777
MW-75 TS	10	TCL Voa/Meth. 8260(25ml)/Water/Case ID	914740
MW-8S	10	TCL Voa/Meth. 8260(25ml)/Water/Case ID	914763
MWA-1	10	TCL Voa/Meth. 8260(25ml)/Water/Case ID	914774
MWA-2	10	TCL Voa/Meth. 8260(25ml)/Water/Case ID	914760
MWA-3	10	TCL Voa/Meth. 8260(25ml)/Water/Case ID	914758
MWA-4	10	TCL Voa/Meth. 8260(25ml)/Water/Case ID	914775
MWA-5	10	TCL Voa/Meth. 8260(25ml)/Water/Case ID	914743
MWA-6	10	TCL Voa/Meth. 8260(25ml)/Water/Case ID	914744
MWA-6DUP	10	TCL Voa/Meth. 8260(25ml)/Water/Case ID	914746
MWB-1	10	TCL Voa/Meth. 8260(25ml)/Water/Case ID	914730
MWB-2	10	TCL Voa/Meth. 8260(25ml)/Water/Case ID	914738
MWB-3	10	TCL Voa/Meth. 8260(25ml)/Water/Case ID	914756
MWB-4	10	TCL Voa/Meth. 8260(25ml)/Water/Case ID	914732
MWB-5	10	TCL Voa/Meth. 8260(25ml)/Water/Case ID	914742
MWB-6	10	TCL Voa/Meth. 8260(25ml)/Water/Case ID	914762
MWC-1	10	TCL Voa/Meth. 8260(25ml)/Water/Case ID	914729
MWC-2	10	TCL Voa/Meth. 8260(25ml)/Water/Case ID	914739
MWC-3	10	TCL Voa/Meth. 8260(25ml)/Water/Case ID	914757
PZ-10I	10	TCL Voa/Meth. 8260(25ml)/Water/Case ID	914769
PZ-12D	10	TCL Voa/Meth. 8260(25ml)/Water/Case ID	914751
PZ-12I	10	TCL Voa/Meth. 8260(25ml)/Water/Case ID	914750
PZ-13I	10	TCL Voa/Meth. 8260(25ml)/Water/Case ID	914745
PZ-14I	10	TCL Voa/Meth. 8260(25ml)/Water/Case ID	914759
PZ-16D	10	TCL Voa/Meth. 8260(25ml)/Water/Case ID	914761

** Please note that turnaround time and sample due dates will be, whenever applicable, calculated and determined by the last sample received in a Sample Delivery Group.

10/19

LEGGETTE BRASHEARS & GRAHAM
ATTN: MR. KEN VOGEL
1210 WEST COUNTY Rd. E, STE700
ST. PAUL, MN 55112

RECEIVE DATE: 10/17/98
QUOTE NUMBER: 98-00070800000501112
ORDER NUMBER: 33902

SAMPLE ID	TURNAROUND** TIME	ANALYSIS	COMPUCHEM NUMBER
PZ-17D ✓	10	TCL Voa/Meth. 8260(25ml)/Water/Case ID	914770
PZ-17I ✓	10	TCL Voa/Meth. 8260(25ml)/Water/Case ID	914773
PZ-19I ✓	10	TCL Voa/Meth. 8260(25ml)/Water/Case ID	914735
PZ-20D ✓	10	TCL Voa/Meth. 8260(25ml)/Water/Case ID	914736
PZ-21I ✓	10	TCL Voa/Meth. 8260(25ml)/Water/Case ID	914733
PZ-22I ✓	10	TCL Voa/Meth. 8260(25ml)/Water/Case ID	914731
PZ-7I ✓	10	TCL Voa/Meth. 8260(25ml)/Water/Case ID	914741
PZ-8D ✓	10	TCL Voa/Meth. 8260(25ml)/Water/Case ID	914766
PZ-8I ✓	10	TCL Voa/Meth. 8260(25ml)/Water/Case ID	914765
PZ-9D ✓	10	TCL Voa/Meth. 8260(25ml)/Water/Case ID	914767
SPARGEH2O ✓	10	TCL Voa/Meth. 8260(25ml)/Water/Case ID	914776
TBLK101498 ✓	10	TCL Voa/Meth. 8260(25ml)/Water/Case ID	914747

914888
PZ-15I
added
once ID confirmed
10/19

10/19

** Please note that turnaround time and sample due dates will be, whenever applicable, calculated and determined by the last sample received in a Sample Delivery Group.

CompuChem

WATER BATCH SHEET

RFA 254

Date Batched 10/20/98
Case 33902.25401
Instrument Code

LINKER W8260 TAT 10 SOW

	CCN	CLIENT ID	QC SAMPLE TYPE	QC SAMPLE ORIGINAL	pH	TIME	DATE RUN	INST. #	OPERATOR	H/T	VOLUME/ INSTRUCTIONS	SCREEN BOTTLE #	ANALYSIS BOTTLE #
1)	914727		SS	914758	—	0039	10.23.98	54	2230		1355/1044	of	of
2)	914728		SS	914758	—	0113	↓	↓	↓			of	of
3)	914726	E1Ø1498-1			1	1041	10.21.98	54	2347	10/28		of	of
4)	914729	MWC-1			1	1438	102098	54	2343		RN	of	of
5)	914730	MWB-1			1	1485					RN	of	of
6)	914731	PZ-22I			1	1558						of	of
7)	914732	MWB-4			1	2035						of	of
8)	914733	PZ-21I			1	1116	10.21.98	54	2347			of	of
9)	914734	MW-19S			1	1151						of	of
10)	914735	PZ-19I			1	1226						of	of
11)	914736	PZ-2ØD			1	1300	↓	↓	↓		↓	of	of
12)	914737	MW-18S			1	1824	102198	54	2230		750uL	of	of
13)	914738	MWB-2			1	~~1300~~ 1400	10.21.98 KP 10.21.98	54	2347		RN	of	of
14)	914739	MWC-2			1	1519	↓	↓	↓		↓	of	of
15)	914740	MW-7S kn 10/20/98			5	1858	102198	54	2230		12.5mL	of	of
16)	914741	PZ-7I			1	1711	102198	54	2230		RN	of	of
17)	914742	MWB-5			1	1745	↓	↓	↓		RN	of	of
18)	914743	MWA-5			1	1934					250uL	of	of
19)	914744	MW-6			1	2149	102298	54	2230		1mL	of	of
20)	914745	PZ-13I			1	2223	↓	↓	↓		500uL	of	of
21)	914746	MWA-6DUP			1	2257	↓	↓	↓		~~1mL~~ 250uL	of	of
22)	914758	MWA-3			1	2331	↓	↓	↓	↓	USE 914758 500uL FOR QC	of	of
23)	915022	VLCS69	LCS		—	0951	10.21.98	54	2347			of	of

Relinquished By RaFL Date 102098 Received By MB Date 102098
Relinquished By MB Date 102098 Received By RaFL Date 102098
Relinquished By RaF2 KP Date 10.21.98 Received By KP Date 10.21.98
10.21.98 Hlemos 102198
102198 Hlemos 102198
RaF2

Log Page Updated _____ Hlemos

CompuChem

WATER BATCH SHEET

RFF 254

Date Batched _____

Case _____

Instrument Code _____

LINKER W8260

TAT _____ SOW _____

	CCN	CLIENT ID	QC SAMPLE TYPE	QC SAMPLE ORIGINAL	pH	TIME	DATE RUN	INST.	OPERATOR	H/T	VOLUME/ INSTRUCTIONS	SCREEN BOTTLE #	ANALYSIS BOTTLE #
1)	914730R				—	0005	102298	54	2230		13mL	of	of
2)	915825	VLCS 39			—	2104	102298	54	2230			of	of
3)	914744R				—	0147	10.23.98	↓	↓		25ml	of	of
4)	914756R				—	0221	↓	54	2230		275ml	of	of
5)												of	of
6)												of	of
7)												of	of
8)												of	of
9)												of	of
10)												of	of
11)												of	of
12)												of	of
13)												of	of
14)												of	of
15)												of	of
16)												of	of
17)												of	of
18)												of	of
19)												of	of
20)												of	of
21)												of	of
22)												of	of
23)											10.23.98 KP	of	of

Relinquished By Ref 2 Date 102298 Received By [illegible] Date 102298

Relinquished By [illegible] Date 102298 Received By Ref 2 Date 10.22.98

Relinquished By _____ Date _____ Received By _____ Date _____

Log Page Updated _____

Mark

COMPUCHEM
INTERNAL CHAIN-OF-CUSTODY

Laboratory: VOA

Requested By: KM

Water ✓ Soil ____ P.E. ____

Date: 10/20/88 Shift: 1 2 Sat (circle one)

EPA ____ Commercial ✓

	CCN	RECEIPT DATE	PRES.	PARAMETER	RECEIVING USE ONLY BOTTLE NUMBER
1	914726	10/17			1-3 of 2-3
2	729				1-3 of 2-3
3	730				1-3 of 2-3
4	731				2-3 of 3-3
5	732				1-3 of 2-3
6	733				1-3 of 2-3
7	734				2-3 of 3-3
8	735				1-3 of 2-3
9	736				2-3 of 3-3
10	737				1-3 of 2-3
11	739				2-3 of 3-3
12	740				1-3 of 2-3
13	741				2-3 of 3-3
14	742				1-3 of 2-3
15	743				1-3 of 2-3
16	745				1-3 of 2-3
17	746				1-3 of 2-3
18	758				1-4 of 2-4
19	738				1-3 of 2-3
20	744				1-3 of 2-3

Relinquished By: D. Nome Date: 10/20/88

Received By: [illegible] Date: [illegible]

Relinquished By: ____ Date: ____

Received By: ____ Date: ____

Comments:

CompuChem Receiving Log

Client: Chrysler LBG
Order #: 33902
Project: RFA #254
Quote #: 98-7080
Account #: 50112

Received on: 10-17-98 # of COC's: 5
Delivered by: FED-EX
Freight #: See Various COCs
Subcontract Y / (N)
TAT: Verbal _____ Hardcopy 10 day

PPS / (RFA #) 254 Page 1 of 3
Lab Instructions: TCL VOCs

	SDG	REQ	SAMPLE ID	CCN	AMOUNT / CONTAINER	PARAMETER	ANALYSIS CODE	LINE ITEM	SAMPLE DATE	MX	pH
1	25401	1	E101498-1 (EB)	914726	3-60ml VOA	TCL VOA	1356	1	10/14/98	WA	N/A
2		2	MWC-1	729							
3		3	MWB-1	730							
4		4	PZ-22I	731							
5		5	MWB-4 *	732							
6		6	PZ-21I	733							
7		7	MW-19S	734							
8		8	~~MW~~ PZ-19I	735							
9		9	PZ-20D *	736							
10		10	MW-18S	737							
11		11	MWB-2 *	738							
12		12	MWC-2	739							
13		13	MW-7S	740							
14		14	PZ-7I	741							
15		15	MWB-5	742							
16		16	MWA-5	743							
17		17	MWA-6	744							
18		18	PZ-13I	745							
19		19	MWA-6DUP	746							
20	25402	20	TBLK101498 (TB)	747	2-60ml VOA						

Logged In By: Melissa Stu
Order Entered By: Melissa Stu

Cyanide samples checked for sulfide and chlorine Y / NA
Received in good condition (Y) / N

Holding Blank(s): Counter / Page _____ / _____ CCN's _____ / _____
Temperature(s) 4 °C

CompuChem Receiving Log

Client: Chrysler
Order #: 33902
Project: RFA 254
Quote #: 98-7080
Account #: 501112

Received on: 10/17/98 # of COC's ____
Delivered by: Federal Express
Freight #: ____
Subcontract Y / (N) see pg 1
TAT: Verbal ____ Hardcopy 10 day

PPS / RFA # ____ Page 2 of 3
Lab Instructions: see pg 1

	SDG	REQ	SAMPLE ID	CCN	AMOUNT / CONTAINER	PARAMETER	ANALYSIS CODE	LINE ITEM	SAMPLE DATE	MX	SN
1	25402	21	PZ-12I	914750	3-60ml V	TCL VOA	1356	1	10/14/98	WA	NA
2		22	PZ-12D	914751							
3		23	MW-15S	752	2-60ml V						
4		24	TE101498-2	753							
5	25403	25	PZ-15I	914888							
6	25402	26	MW-11S	914754							
7		27	MW-11SDUP	755							
8		28	MWB-3	756							
9		29	MWC-3	757							
10	25401	30	MWA-3 (MS/MSD)	758	4-60ml-V						
11	25402	31	PZ-14I	759	2-60ml-V						
12		32	MWA-2 (MS/MSD)	760	4-60ml-V						
13		33	PZ-16D	761	2-60ml VOA						
14		34	MWB-6	762					10/15/98		
15		35	MW-8S	763							
16		36	TE101598-3	764							
17		37	PZ-8I	765							
18		38	PZ-8D	766							
19		39	PZ-9D	767							
20		40	MW-10S	768							

Logged In By: Melissa St 10/19/98

Order Entered By: Melissa St

Cyanide samples checked for sulfide and chlorine Y / NA

Received in good condition (Y) / N ____

Holding Blank(s): Counter / Page ____ / ____ CCN's ____ / ____

Temperature(s) 4 °C

Sample Receiving Log

Client: Chrysler
Order #: see pg 1
Project:
Quote #: see pg 1
Account #:

Received on: _____ # of COC's: 1
Delivered by: see pg 1
Freight #:
Subcontract Y / N: see pg 1
TAT: Verbal _____ Hardcopy _____

PPS / RFA #: _____ Page 3 of 3
Lab Instructions: see pg 1

	SDG	REQ	SAMPLE ID	CCN	AMOUNT / CONTAINER	PARAMETER	ANALYSIS CODE	LINE ITEM	SAMPLE DATE	MX	pH
1	25402	41	PZ-10I	914769	2-60ml V	TCL VOA	1356	1	10/15/98	WA	N/A
2	25403	42	PZ-17D	914770							
3		43	PZ-17I	914773							
4		44	MWA-1	914774							
5		45	MWA-4	914775							
6		46	SPARGE H20	914776							
7		47	MW-20S	914777	3-60ml V				10/14/98		
8											
9											
10											
11											
12											
13											
14											
15											
16											
17											
18											
19											
20											

MS 10/16/98

Logged In By: Melissa Sh
Order Entered By: Melissa Sh
Cyanide samples checked for sulfide and chlorine Y / NA
Received in good condition Y / N
Holding Blank(s): Counter / Page _____ / _____ CCN's _____ / _____
Temperature(s) 4 °C

1A
VOLATILE ORGANICS ANALYSIS DATA SHEET

SAMPLE NO.

E101498-1

Project: RFA254 Date Sampled: 10/14/98

Lab Code: COMPU Case No.: 33902 SAS No.: SDG No.: 25401

Matrix: (soil/water) WATER Lab Sample ID: 914726

Sample wt/vol: 25.0 (g/mL) ML Lab File ID: CN014726A54.D

Level: (low/med) LOW Date Received: 10/17/98

% Moisture: not dec. _____ Date Analyzed: 10/21/98

GC Column:SP624 ID: 0.53 (mm) Dilution Factor: 1.0

Soil Extract Volume: _____(uL) Soil Aliquot Volume: _____(uL)

CONCENTRATION UNITS: UG/L

CAS NO.	COMPOUND	DL	CONC	Q
74-83-9	Bromomethane	0.5		U
75-01-4	Vinyl Chloride	1		U
75-00-3	Chloroethane	0.5		U
75-09-2	Methylene Chloride	15	3	JB
75-35-4	1,1-Dichloroethene	0.8		U
75-34-3	1,1-Dichloroethane	0.5		U
67-66-3	Chloroform	0.8		U
107-06-2	1,2-Dichloroethane	0.8		U
71-55-6	1,1,1-Trichloroethane	0.8		U
56-23-5	Carbon Tetrachloride	1		U
75-27-4	Bromodichloromethane	0.5		U
10061-01-5	cis-1,3-Dichloropropene	0.5		U
79-01-6	Trichloroethene	0.8		U
124-48-1	Dibromochloromethane	0.5		U
79-00-5	1,1,2-Trichloroethane	0.8		U
71-43-2	Benzene	0.8		U
10061-02-6	trans-1,3-Dichloropropene	0.8		U
75-25-2	Bromoform	0.5		U
127-18-4	Tetrachloroethene	0.8		U
79-34-5	1,1,2,2-Tetrachloroethane	0.5		U
108-88-3	Toluene	0.8		U
108-90-7	Chlorobenzene	0.5		U
100-41-4	Ethylbenzene	0.5		U
100-42-5	Styrene	0.5		U
78-87-5	1,2-Dichloropropane	0.8		U
74-87-3	Chloromethane	1		U
75-15-0	Carbon disulfide	0.5		U
67-64-1	Acetone	5	0.9	J
108-10-1	4-Methyl-2-pentanone	2		U
591-78-6	2-hexanone	2		U
78-93-3	2-butanone	3		U
156-60-5	trans-1,2-Dichloroethene	0.8		U
156-59-2	cis-1,2-Dichloroethene	0.5		U

1A
VOLATILE ORGANICS ANALYSIS DATA SHEET

SAMPLE NO.

E101498-1

Project: RFA254 Date Sampled: 10/14/98

Lab Code: COMPU Case No.: 33902 SAS No.: SDG No.: 25401

Matrix: (soil/water) WATER Lab Sample ID: 914726

Sample wt/vol: 25.0 (g/mL) ML Lab File ID: CN014726A54.D

Level: (low/med) LOW Date Received: 10/17/98

% Moisture: not dec. _____ Date Analyzed: 10/21/98

GC Column:SP624 ID: 0.53 (mm) Dilution Factor: 1.0

Soil Extract Volume: _____(uL) Soil Aliquot Volume: _____(uL)

CONCENTRATION UNITS: UG/L

CAS NO.	COMPOUND	DL	CONC	Q
1330-20-7	Xylene (total)	0.5		U

1A
VOLATILE ORGANICS ANALYSIS DATA SHEET

SAMPLE NO.

MW-18S

Project: RFA254 Date Sampled: 10/14/98

Lab Code: COMPU Case No.: 33902 SAS No.: SDG No.: 25401

Matrix: (soil/water) WATER Lab Sample ID: 914737

Sample wt/vol: 25.0 (g/mL) ML Lab File ID: CN014737A54.D

Level: (low/med) LOW Date Received: 10/17/98

% Moisture: not dec. _____ Date Analyzed: 10/21/98

GC Column:SP624 ID: 0.53 (mm) Dilution Factor: 33.0

Soil Extract Volume: _____(uL) Soil Aliquot Volume: _____(uL)

CONCENTRATION UNITS: UG/L

CAS NO.	COMPOUND	DL	CONC	Q
74-83-9	Bromomethane	16		U
75-01-4	Vinyl Chloride	33		U
75-00-3	Chloroethane	16		U
75-09-2	Methylene Chloride	500	19	JB
75-35-4	1,1-Dichloroethene	25		U
75-34-3	1,1-Dichloroethane	16	9	J
67-66-3	Chloroform	25		U
107-06-2	1,2-Dichloroethane	25		U
71-55-6	1,1,1-Trichloroethane	25	65	
56-23-5	Carbon Tetrachloride	33		U
75-27-4	Bromodichloromethane	16		U
10061-01-5	cis-1,3-Dichloropropene	16		U
79-01-6	Trichloroethene	25	47	
124-48-1	Dibromochloromethane	16		U
79-00-5	1,1,2-Trichloroethane	25		U
71-43-2	Benzene	25		U
10061-02-6	trans-1,3-Dichloropropene	25		U
75-25-2	Bromoform	16		U
127-18-4	Tetrachloroethene	25	770	
79-34-5	1,1,2,2-Tetrachloroethane	16		U
108-88-3	Toluene	25		U
108-90-7	Chlorobenzene	16		U
100-41-4	Ethylbenzene	16		U
100-42-5	Styrene	16		U
78-87-5	1,2-Dichloropropane	25		U
74-87-3	Chloromethane	33		U
75-15-0	Carbon disulfide	16		U
67-64-1	Acetone	160	23	J
108-10-1	4-Methyl-2-pentanone	66		U
591-78-6	2-hexanone	66		U
78-93-3	2-butanone	99		U
156-60-5	trans-1,2-Dichloroethene	25		U
156-59-2	cis-1,2-Dichloroethene	16	72	

1A
VOLATILE ORGANICS ANALYSIS DATA SHEET

SAMPLE NO.

MW-18S

Project: RFA254 Date Sampled: 10/14/98

Lab Code: COMPU Case No.: 33902 SAS No.: SDG No.: 25401

Matrix: (soil/water) WATER Lab Sample ID: 914737

Sample wt/vol: 25.0 (g/mL) ML Lab File ID: CN014737A54.D

Level: (low/med) LOW Date Received: 10/17/98

% Moisture: not dec. _____ Date Analyzed: 10/21/98

GC Column:SP624 ID: 0.53 (mm) Dilution Factor: 33.0

Soil Extract Volume: _____(uL) Soil Aliquot Volume: _____(uL)

CONCENTRATION UNITS: UG/L

CAS NO.	COMPOUND	DL	CONC	Q
1330-20-7	Xylene (total)	16		U

1A
VOLATILE ORGANICS ANALYSIS DATA SHEET

SAMPLE NO.

MW-19S

Project: RFA254 Date Sampled: 10/14/98

Lab Code: COMPU Case No.: 33902 SAS No.: SDG No.: 25401

Matrix: (soil/water) WATER Lab Sample ID: 914734

Sample wt/vol: 25.0 (g/mL) ML Lab File ID: CN014734A54.D

Level: (low/med) LOW Date Received: 10/17/98

% Moisture: not dec. _____ Date Analyzed: 10/21/98

GC Column:SP624 ID: 0.53 (mm) Dilution Factor: 1.0

Soil Extract Volume: _____(uL) Soil Aliquot Volume: _____(uL)

CONCENTRATION UNITS: UG/L

CAS NO.	COMPOUND	DL	CONC	Q
74-83-9	Bromomethane	0.5		U
75-01-4	Vinyl Chloride	1		U
75-00-3	Chloroethane	0.5		U
75-09-2	Methylene Chloride	15	2	JB
75-35-4	1,1-Dichloroethene	0.8		U
75-34-3	1,1-Dichloroethane	0.5		U
67-66-3	Chloroform	0.8		U
107-06-2	1,2-Dichloroethane	0.8		U
71-55-6	1,1,1-Trichloroethane	0.8	0.5	J
56-23-5	Carbon Tetrachloride	1		U
75-27-4	Bromodichloromethane	0.5		U
10061-01-5	cis-1,3-Dichloropropene	0.5		U
79-01-6	Trichloroethene	0.8	1	
124-48-1	Dibromochloromethane	0.5		U
79-00-5	1,1,2-Trichloroethane	0.8		U
71-43-2	Benzene	0.8		U
10061-02-6	trans-1,3-Dichloropropene	0.8		U
75-25-2	Bromoform	0.5		U
127-18-4	Tetrachloroethene	0.8		U
79-34-5	1,1,2,2-Tetrachloroethane	0.5		U
108-88-3	Toluene	0.8		U
108-90-7	Chlorobenzene	0.5		U
100-41-4	Ethylbenzene	0.5		U
100-42-5	Styrene	0.5		U
78-87-5	1,2-Dichloropropane	0.8		U
74-87-3	Chloromethane	1		U
75-15-0	Carbon disulfide	0.5		U
67-64-1	Acetone	5	1	J
108-10-1	4-Methyl-2-pentanone	2		U
591-78-6	2-hexanone	2		U
78-93-3	2-butanone	3		U
156-60-5	trans-1,2-Dichloroethene	0.8		U
156-59-2	cis-1,2-Dichloroethene	0.5		U

1A
VOLATILE ORGANICS ANALYSIS DATA SHEET

SAMPLE NO.

MW-19S

Project: RFA254 Date Sampled: 10/14/98

Lab Code: COMPU Case No.: 33902 SAS No.: SDG No.: 25401

Matrix: (soil/water) WATER Lab Sample ID: 914734

Sample wt/vol: 25.0 (g/mL) ML Lab File ID: CN014734A54.D

Level: (low/med) LOW Date Received: 10/17/98

% Moisture: not dec. _____ Date Analyzed: 10/21/98

GC Column:SP624 ID: 0.53 (mm) Dilution Factor: 1.0

Soil Extract Volume: _____(uL) Soil Aliquot Volume: _____(uL)

CONCENTRATION UNITS: UG/L

CAS NO.	COMPOUND	DL	CONC	Q
1330-20-7	Xylene (total)	0.5		U

1A
VOLATILE ORGANICS ANALYSIS DATA SHEET

SAMPLE NO.

MW-7S

Project: RFA254 Date Sampled: 10/14/98

Lab Code: COMPU Case No.: 33902 SAS No.: SDG No.: 25401

Matrix: (soil/water) WATER Lab Sample ID: 914740

Sample wt/vol: 25.0 (g/mL) ML Lab File ID: CN014740A54.D

Level: (low/med) LOW Date Received: 10/17/98

% Moisture: not dec. _____ Date Analyzed: 10/21/98

GC Column:SP624 ID: 0.53 (mm) Dilution Factor: 2.0

Soil Extract Volume: _____(uL) Soil Aliquot Volume: _____(uL)

CONCENTRATION UNITS: UG/L

CAS NO.	COMPOUND	DL	CONC	Q
74-83-9	Bromomethane	1		U
75-01-4	Vinyl Chloride	2		U
75-00-3	Chloroethane	1		U
75-09-2	Methylene Chloride	30	2	JB
75-35-4	1,1-Dichloroethene	2		U
75-34-3	1,1-Dichloroethane	1		U
67-66-3	Chloroform	2		U
107-06-2	1,2-Dichloroethane	2		U
71-55-6	1,1,1-Trichloroethane	2	0.6	J
56-23-5	Carbon Tetrachloride	2		U
75-27-4	Bromodichloromethane	1		U
10061-01-5	cis-1,3-Dichloropropene	1		U
79-01-6	Trichloroethene	2	27	
124-48-1	Dibromochloromethane	1		U
79-00-5	1,1,2-Trichloroethane	2		U
71-43-2	Benzene	2		U
10061-02-6	trans-1,3-Dichloropropene	2		U
75-25-2	Bromoform	1		U
127-18-4	Tetrachloroethene	2		U
79-34-5	1,1,2,2-Tetrachloroethane	1		U
108-88-3	Toluene	2		U
108-90-7	Chlorobenzene	1		U
100-41-4	Ethylbenzene	1		U
100-42-5	Styrene	1		U
78-87-5	1,2-Dichloropropane	2		U
74-87-3	Chloromethane	2		U
75-15-0	Carbon disulfide	1		U
67-64-1	Acetone	10	3	J
108-10-1	4-Methyl-2-pentanone	4		U
591-78-6	2-hexanone	4		U
78-93-3	2-butanone	6		U
156-60-5	trans-1,2-Dichloroethene	2		U
156-59-2	cis-1,2-Dichloroethene	1	1	

1A
VOLATILE ORGANICS ANALYSIS DATA SHEET

SAMPLE NO.

MW-7S

Project: RFA254 Date Sampled: 10/14/98

Lab Code: COMPU Case No.: 33902 SAS No.: SDG No.: 25401

Matrix: (soil/water) WATER Lab Sample ID: 914740

Sample wt/vol: 25.0 (g/mL) ML Lab File ID: CN014740A54.D

Level: (low/med) LOW Date Received: 10/17/98

% Moisture: not dec. _____ Date Analyzed: 10/21/98

GC Column:SP624 ID: 0.53 (mm) Dilution Factor: 2.0

Soil Extract Volume: _____(uL) Soil Aliquot Volume: _____(uL)

CONCENTRATION UNITS: UG/L

CAS NO.	COMPOUND	DL	CONC	Q
1330-20-7	Xylene (total)	1		U

1A
VOLATILE ORGANICS ANALYSIS DATA SHEET

SAMPLE NO.

MWA-3

Project: RFA254 | Date Sampled: 10/14/98

Lab Code: COMPU | Case No.: 33902 | SAS No.: | SDG No.: 25401

Matrix: (soil/water) WATER | Lab Sample ID: 914758

Sample wt/vol: 25.0 (g/mL) ML | Lab File ID: CR014758B54.D

Level: (low/med) LOW | Date Received: 10/17/98

% Moisture: not dec. _____ | Date Analyzed: 10/23/98

GC Column:SP624 ID: 0.53 (mm) | Dilution Factor: 90.0

Soil Extract Volume: _____(uL) | Soil Aliquot Volume: _____(uL)

CONCENTRATION UNITS: UG/L

CAS NO.	COMPOUND	DL	CONC	Q
74-83-9	Bromomethane	45		U
75-01-4	Vinyl Chloride	90		U
75-00-3	Chloroethane	45		U
75-09-2	Methylene Chloride	1400	110	JB
75-35-4	1,1-Dichloroethene	68	190	
75-34-3	1,1-Dichloroethane	45	89	
67-66-3	Chloroform	68		U
107-06-2	1,2-Dichloroethane	68		U
71-55-6	1,1,1-Trichloroethane	68	1700	
56-23-5	Carbon Tetrachloride	90		U
75-27-4	Bromodichloromethane	45		U
10061-01-5	cis-1,3-Dichloropropene	45		U
79-01-6	Trichloroethene	68	180	
124-48-1	Dibromochloromethane	45		U
79-00-5	1,1,2-Trichloroethane	68		U
71-43-2	Benzene	68		U
10061-02-6	trans-1,3-Dichloropropene	68		U
75-25-2	Bromoform	45		U
127-18-4	Tetrachloroethene	68	610	
79-34-5	1,1,2,2-Tetrachloroethane	45		U
108-88-3	Toluene	68		U
108-90-7	Chlorobenzene	45		U
100-41-4	Ethylbenzene	45		U
100-42-5	Styrene	45		U
78-87-5	1,2-Dichloropropane	68		U
74-87-3	Chloromethane	90		U
75-15-0	Carbon disulfide	45		U
67-64-1	Acetone	450	150	JB
108-10-1	4-Methyl-2-pentanone	180		U
591-78-6	2-hexanone	180		U
78-93-3	2-butanone	270		U
156-60-5	trans-1,2-Dichloroethene	68		U
156-59-2	cis-1,2-Dichloroethene	45	170	

1A
VOLATILE ORGANICS ANALYSIS DATA SHEET

SAMPLE NO.

MWA-3

Project: RFA254 Date Sampled: 10/14/98

Lab Code: COMPU Case No.: 33902 SAS No.: SDG No.: 25401

Matrix: (soil/water) WATER Lab Sample ID: 914758

Sample wt/vol: 25.0 (g/mL) ML Lab File ID: CR014758B54.D

Level: (low/med) LOW Date Received: 10/17/98

% Moisture: not dec. _____ Date Analyzed: 10/23/98

GC Column:SP624 ID: 0.53 (mm) Dilution Factor: 90.0

Soil Extract Volume: _____(uL) Soil Aliquot Volume: _____(uL)

CONCENTRATION UNITS: UG/L

CAS NO.	COMPOUND	DL	CONC	Q
1330-20-7	Xylene (total)	45		U

FORM I VOA

1A
VOLATILE ORGANICS ANALYSIS DATA SHEET

SAMPLE NO.

MWA-3MS

Project: RFA254 Date Sampled: 10/14/98

Lab Code: COMPU Case No.: 33902 SAS No.: SDG No.: 25401

Matrix: (soil/water) WATER Lab Sample ID: 914727

Sample wt/vol: 25.0 (g/mL) ML Lab File ID: CN014727B54.D

Level: (low/med) LOW Date Received: 10/17/98

% Moisture: not dec. _____ Date Analyzed: 10/23/98

GC Column:SP624 ID: 0.53 (mm) Dilution Factor: 90.0

Soil Extract Volume: _____(uL) Soil Aliquot Volume: _____(uL)

CONCENTRATION UNITS: UG/L

CAS NO.	COMPOUND	DL	CONC	Q
74-83-9	Bromomethane	45	400	
75-01-4	Vinyl Chloride	90	380	
75-00-3	Chloroethane	45	410	
75-09-2	Methylene Chloride	1400	440	JB
75-35-4	1,1-Dichloroethene	68	590	
75-34-3	1,1-Dichloroethane	45	470	
67-66-3	Chloroform	68	400	
107-06-2	1,2-Dichloroethane	68	420	
71-55-6	1,1,1-Trichloroethane	68	1900	
56-23-5	Carbon Tetrachloride	90	430	
75-27-4	Bromodichloromethane	45	420	
10061-01-5	cis-1,3-Dichloropropene	45	400	
79-01-6	Trichloroethene	68	630	
124-48-1	Dibromochloromethane	45	420	
79-00-5	1,1,2-Trichloroethane	68	430	
71-43-2	Benzene	68	420	
10061-02-6	trans-1,3-Dichloropropene	68	420	
75-25-2	Bromoform	45	410	
127-18-4	Tetrachloroethene	68	1000	
79-34-5	1,1,2,2-Tetrachloroethane	45	430	
108-88-3	Toluene	68	430	
108-90-7	Chlorobenzene	45	450	
100-41-4	Ethylbenzene	45	440	
100-42-5	Styrene	45	420	
78-87-5	1,2-Dichloropropane	68	430	
74-87-3	Chloromethane	90	410	
75-15-0	Carbon disulfide	45	430	
67-64-1	Acetone	450	2500	B
108-10-1	4-Methyl-2-pentanone	180	2400	
591-78-6	2-hexanone	180	2400	
78-93-3	2-butanone	270	2300	
156-60-5	trans-1,2-Dichloroethene	68	420	
156-59-2	cis-1,2-Dichloroethene	45	570	

1A
VOLATILE ORGANICS ANALYSIS DATA SHEET

SAMPLE NO.

MWA-3MS

Project: RFA254 Date Sampled: 10/14/98

Lab Code: COMPU Case No.: 33902 SAS No.: SDG No.: 25401

Matrix: (soil/water) WATER Lab Sample ID: 914727

Sample wt/vol: 25.0 (g/mL) ML Lab File ID: CN014727B54.D

Level: (low/med) LOW Date Received: 10/17/98

% Moisture: not dec. _____ Date Analyzed: 10/23/98

GC Column:SP624 ID: 0.53 (mm) Dilution Factor: 90.0

Soil Extract Volume: _____(uL) Soil Aliquot Volume: _____(uL)

CONCENTRATION UNITS: UG/L

CAS NO.	COMPOUND	DL	CONC	Q
1330-20-7	Xylene (total)	45	1500	

1A
VOLATILE ORGANICS ANALYSIS DATA SHEET

SAMPLE NO.

MWA-3MSD

Project: RFA254 Date Sampled: 10/14/98

Lab Code: COMPU Case No.: 33902 SAS No.: SDG No.: 25401

Matrix: (soil/water) WATER Lab Sample ID: 914728

Sample wt/vol: 25.0 (g/mL) ML Lab File ID: CN014728B54.D

Level: (low/med) LOW Date Received: 10/17/98

% Moisture: not dec. _____ Date Analyzed: 10/23/98

GC Column:SP624 ID: 0.53 (mm) Dilution Factor: 90.0

Soil Extract Volume: _____(uL) Soil Aliquot Volume: _____(uL)

CONCENTRATION UNITS: UG/L

CAS NO.	COMPOUND	DL	CONC	Q
74-83-9	Bromomethane	45	420	
75-01-4	Vinyl Chloride	90	420	
75-00-3	Chloroethane	45	420	
75-09-2	Methylene Chloride	1400	480	JB
75-35-4	1,1-Dichloroethene	68	590	
75-34-3	1,1-Dichloroethane	45	500	
67-66-3	Chloroform	68	410	
107-06-2	1,2-Dichloroethane	68	450	
71-55-6	1,1,1-Trichloroethane	68	2000	
56-23-5	Carbon Tetrachloride	90	440	
75-27-4	Bromodichloromethane	45	440	
10061-01-5	cis-1,3-Dichloropropene	45	430	
79-01-6	Trichloroethene	68	630	
124-48-1	Dibromochloromethane	45	450	
79-00-5	1,1,2-Trichloroethane	68	460	
71-43-2	Benzene	68	440	
10061-02-6	trans-1,3-Dichloropropene	68	500	
75-25-2	Bromoform	45	450	
127-18-4	Tetrachloroethene	68	1000	
79-34-5	1,1,2,2-Tetrachloroethane	45	460	
108-88-3	Toluene	68	440	
108-90-7	Chlorobenzene	45	470	
100-41-4	Ethylbenzene	45	440	
100-42-5	Styrene	45	430	
78-87-5	1,2-Dichloropropane	68	440	
74-87-3	Chloromethane	90	420	
75-15-0	Carbon disulfide	45	420	
67-64-1	Acetone	450	2800	B
108-10-1	4-Methyl-2-pentanone	180	3000	
591-78-6	2-hexanone	180	3000	
78-93-3	2-butanone	270	2700	
156-60-5	trans-1,2-Dichloroethene	68	420	
156-59-2	cis-1,2-Dichloroethene	45	590	

1A
VOLATILE ORGANICS ANALYSIS DATA SHEET

SAMPLE NO.

MWA-3MSD

Project: RFA254 Date Sampled: 10/14/98

Lab Code: COMPU Case No.: 33902 SAS No.: SDG No.: 25401

Matrix: (soil/water) WATER Lab Sample ID: 914728

Sample wt/vol: 25.0 (g/mL) ML Lab File ID: CN014728B54.D

Level: (low/med) LOW Date Received: 10/17/98

% Moisture: not dec. _____ Date Analyzed: 10/23/98

GC Column:SP624 ID: 0.53 (mm) Dilution Factor: 90.0

Soil Extract Volume: _____(uL) Soil Aliquot Volume: _____(uL)

CONCENTRATION UNITS: UG/L

CAS NO.	COMPOUND	DL	CONC	Q
1330-20-7	Xylene (total)	45	1400	

1A
VOLATILE ORGANICS ANALYSIS DATA SHEET

SAMPLE NO.

MWA-5

Project: RFA254 Date Sampled: 10/14/98

Lab Code: COMPU Case No.: 33902 SAS No.: SDG No.: 25401

Matrix: (soil/water) WATER Lab Sample ID: 914743

Sample wt/vol: 25.0 (g/mL) ML Lab File ID: CN014743A54.D

Level: (low/med) LOW Date Received: 10/17/98

% Moisture: not dec. _____ Date Analyzed: 10/21/98

GC Column:SP624 ID: 0.53 (mm) Dilution Factor: 100.0

Soil Extract Volume: _____(uL) Soil Aliquot Volume: _____(uL)

CONCENTRATION UNITS: UG/L

CAS NO.	COMPOUND	DL	CONC	Q
74-83-9	Bromomethane	50		U
75-01-4	Vinyl Chloride	100		U
75-00-3	Chloroethane	50		U
75-09-2	Methylene Chloride	1500	64	JB
75-35-4	1,1-Dichloroethene	75	180	
75-34-3	1,1-Dichloroethane	50	120	
67-66-3	Chloroform	75		U
107-06-2	1,2-Dichloroethane	75		U
71-55-6	1,1,1-Trichloroethane	75	2100	
56-23-5	Carbon Tetrachloride	100		U
75-27-4	Bromodichloromethane	50		U
10061-01-5	cis-1,3-Dichloropropene	50		U
79-01-6	Trichloroethene	75	1600	
124-48-1	Dibromochloromethane	50		U
79-00-5	1,1,2-Trichloroethane	75		U
71-43-2	Benzene	75		U
10061-02-6	trans-1,3-Dichloropropene	75		U
75-25-2	Bromoform	50		U
127-18-4	Tetrachloroethene	75	180	
79-34-5	1,1,2,2-Tetrachloroethane	50		U
108-88-3	Toluene	75		U
108-90-7	Chlorobenzene	50		U
100-41-4	Ethylbenzene	50		U
100-42-5	Styrene	50		U
78-87-5	1,2-Dichloropropane	75		U
74-87-3	Chloromethane	100		U
75-15-0	Carbon disulfide	50		U
67-64-1	Acetone	500		U
108-10-1	4-Methyl-2-pentanone	200		U
591-78-6	2-hexanone	200		U
78-93-3	2-butanone	300		U
156-60-5	trans-1,2-Dichloroethene	75		U
156-59-2	cis-1,2-Dichloroethene	50	77	

1A
VOLATILE ORGANICS ANALYSIS DATA SHEET

SAMPLE NO.

MWA-5

Project: RFA254 Date Sampled: 10/14/98

Lab Code: COMPU Case No.: 33902 SAS No.: SDG No.: 25401

Matrix: (soil/water) WATER Lab Sample ID: 914743

Sample wt/vol: 25.0 (g/mL) ML Lab File ID: CN014743A54.D

Level: (low/med) LOW Date Received: 10/17/98

% Moisture: not dec. _____ Date Analyzed: 10/21/98

GC Column:SP624 ID: 0.53 (mm) Dilution Factor: 100.0

Soil Extract Volume: _____(uL) Soil Aliquot Volume: _____(uL)

CONCENTRATION UNITS: UG/L

CAS NO.	COMPOUND	DL	CONC	Q
1330-20-7	Xylene (total)	50		U

FORM I VOA

1A
VOLATILE ORGANICS ANALYSIS DATA SHEET

SAMPLE NO.

MWA-6

Project: RFA254 Date Sampled: 10/14/98

Lab Code: COMPU Case No.: 33902 SAS No.: SDG No.: 25401

Matrix: (soil/water) WATER Lab Sample ID: 914744

Sample wt/vol: 25.0 (g/mL) ML Lab File ID: CN014744B54.D

Level: (low/med) LOW Date Received: 10/17/98

% Moisture: not dec. _____ Date Analyzed: 10/22/98

GC Column:SP624 ID: 0.53 (mm) Dilution Factor: 25.0

Soil Extract Volume: _____(uL) Soil Aliquot Volume: _____(uL)

CONCENTRATION UNITS: UG/L

CAS NO.	COMPOUND	DL	CONC	Q
74-83-9	Bromomethane	12		U
75-01-4	Vinyl Chloride	25		U
75-00-3	Chloroethane	12		U
75-09-2	Methylene Chloride	380	22	JB
75-35-4	1,1-Dichloroethene	19	28	
75-34-3	1,1-Dichloroethane	12	8	J
67-66-3	Chloroform	19		U
107-06-2	1,2-Dichloroethane	19		U
71-55-6	1,1,1-Trichloroethane	19	240	
56-23-5	Carbon Tetrachloride	25		U
75-27-4	Bromodichloromethane	12		U
10061-01-5	cis-1,3-Dichloropropene	12		U
79-01-6	Trichloroethene	19	2000	E
124-48-1	Dibromochloromethane	12		U
79-00-5	1,1,2-Trichloroethane	19		U
71-43-2	Benzene	19		U
10061-02-6	trans-1,3-Dichloropropene	19		U
75-25-2	Bromoform	12		U
127-18-4	Tetrachloroethene	19		U
79-34-5	1,1,2,2-Tetrachloroethane	12		U
108-88-3	Toluene	19		U
108-90-7	Chlorobenzene	12		U
100-41-4	Ethylbenzene	12		U
100-42-5	Styrene	12		U
78-87-5	1,2-Dichloropropane	19		U
74-87-3	Chloromethane	25		U
75-15-0	Carbon disulfide	12		U
67-64-1	Acetone	120	68	JB
108-10-1	4-Methyl-2-pentanone	50		U
591-78-6	2-hexanone	50		U
78-93-3	2-butanone	75		U
156-60-5	trans-1,2-Dichloroethene	19		U
156-59-2	cis-1,2-Dichloroethene	12	97	

1A
VOLATILE ORGANICS ANALYSIS DATA SHEET

SAMPLE NO.

MWA-6

Project: RFA254 Date Sampled: 10/14/98

Lab Code: COMPU Case No.: 33902 SAS No.: SDG No.: 25401

Matrix: (soil/water) WATER Lab Sample ID: 914744

Sample wt/vol: 25.0 (g/mL) ML Lab File ID: CN014744B54.D

Level: (low/med) LOW Date Received: 10/17/98

% Moisture: not dec. _____ Date Analyzed: 10/22/98

GC Column:SP624 ID: 0.53 (mm) Dilution Factor: 25.0

Soil Extract Volume: _____(uL) Soil Aliquot Volume: _____(uL)

CONCENTRATION UNITS: UG/L

CAS NO.	COMPOUND	DL	CONC	Q
1330-20-7	Xylene (total)	12		U

1A
VOLATILE ORGANICS ANALYSIS DATA SHEET

SAMPLE NO.

MWA-6DL

Project: RFA254 | Date Sampled: 10/14/98

Lab Code: COMPU | Case No.: 33902 | SAS No.: | SDG No.: 25401

Matrix: (soil/water) WATER | Lab Sample ID: 914744

Sample wt/vol: 25.0 (g/mL) ML | Lab File ID: CR014744B54.D

Level: (low/med) LOW | Date Received: 10/17/98

% Moisture: not dec. _____ | Date Analyzed: 10/23/98

GC Column:SP624 ID: 0.53 (mm) | Dilution Factor: 100.0

Soil Extract Volume: _____(uL) | Soil Aliquot Volume: _____(uL)

CONCENTRATION UNITS: UG/L

CAS NO.	COMPOUND	DL	CONC	Q
74-83-9	Bromomethane	50		U
75-01-4	Vinyl Chloride	100		U
75-00-3	Chloroethane	50		U
75-09-2	Methylene Chloride	1500	130	DJB
75-35-4	1,1-Dichloroethene	75		U
75-34-3	1,1-Dichloroethane	50		U
67-66-3	Chloroform	75		U
107-06-2	1,2-Dichloroethane	75		U
71-55-6	1,1,1-Trichloroethane	75	230	D
56-23-5	Carbon Tetrachloride	100		U
75-27-4	Bromodichloromethane	50		U
10061-01-5	cis-1,3-Dichloropropene	50		U
79-01-6	Trichloroethene	75	2200	D
124-48-1	Dibromochloromethane	50		U
79-00-5	1,1,2-Trichloroethane	75		U
71-43-2	Benzene	75		U
10061-02-6	trans-1,3-Dichloropropene	75		U
75-25-2	Bromoform	50		U
127-18-4	Tetrachloroethene	75		U
79-34-5	1,1,2,2-Tetrachloroethane	50		U
108-88-3	Toluene	75		U
108-90-7	Chlorobenzene	50		U
100-41-4	Ethylbenzene	50		U
100-42-5	Styrene	50		U
78-87-5	1,2-Dichloropropane	75		U
74-87-3	Chloromethane	100		U
75-15-0	Carbon disulfide	50		U
67-64-1	Acetone	500	150	DJB
108-10-1	4-Methyl-2-pentanone	200		U
591-78-6	2-hexanone	200		U
78-93-3	2-butanone	300		U
156-60-5	trans-1,2-Dichloroethene	75		U
156-59-2	cis-1,2-Dichloroethene	50	89	D

1A
VOLATILE ORGANICS ANALYSIS DATA SHEET

SAMPLE NO.

MWA-6DL

Project: RFA254 Date Sampled: 10/14/98

Lab Code: COMPU Case No.: 33902 SAS No.: SDG No.: 25401

Matrix: (soil/water) WATER Lab Sample ID: 914744

Sample wt/vol: 25.0 (g/mL) ML Lab File ID: CR014744B54.D

Level: (low/med) LOW Date Received: 10/17/98

% Moisture: not dec. _____ Date Analyzed: 10/23/98

GC Column:SP624 ID: 0.53 (mm) Dilution Factor: 100.0

Soil Extract Volume: _____(uL) Soil Aliquot Volume: _____(uL)

CONCENTRATION UNITS: UG/L

CAS NO.	COMPOUND	DL	CONC	Q
1330-20-7	Xylene (total)	50		U

1A
VOLATILE ORGANICS ANALYSIS DATA SHEET

SAMPLE NO.

MWA-6DUP

Project: RFA254 Date Sampled: 10/14/98

Lab Code: COMPU Case No.: 33902 SAS No.: SDG No.: 25401

Matrix: (soil/water) WATER Lab Sample ID: 914746

Sample wt/vol: 25.0 (g/mL) ML Lab File ID: CN014746B54.D

Level: (low/med) LOW Date Received: 10/17/98

% Moisture: not dec. _____ Date Analyzed: 10/22/98

GC Column:SP624 ID: 0.53 (mm) Dilution Factor: 100.0

Soil Extract Volume: _____(uL) Soil Aliquot Volume: _____(uL)

CONCENTRATION UNITS: UG/L

CAS NO.	COMPOUND	DL	CONC	Q
74-83-9	Bromomethane	50		U
75-01-4	Vinyl Chloride	100		U
75-00-3	Chloroethane	50		U
75-09-2	Methylene Chloride	1500	120	JB
75-35-4	1,1-Dichloroethene	75		U
75-34-3	1,1-Dichloroethane	50		U
67-66-3	Chloroform	75		U
107-06-2	1,2-Dichloroethane	75		U
71-55-6	1,1,1-Trichloroethane	75	230	
56-23-5	Carbon Tetrachloride	100		U
75-27-4	Bromodichloromethane	50		U
10061-01-5	cis-1,3-Dichloropropene	50		U
79-01-6	Trichloroethene	75	2100	
124-48-1	Dibromochloromethane	50		U
79-00-5	1,1,2-Trichloroethane	75		U
71-43-2	Benzene	75		U
10061-02-6	trans-1,3-Dichloropropene	75		U
75-25-2	Bromoform	50		U
127-18-4	Tetrachloroethene	75		U
79-34-5	1,1,2,2-Tetrachloroethane	50		U
108-88-3	Toluene	75		U
108-90-7	Chlorobenzene	50		U
100-41-4	Ethylbenzene	50		U
100-42-5	Styrene	50		U
78-87-5	1,2-Dichloropropane	75		U
74-87-3	Chloromethane	100		U
75-15-0	Carbon disulfide	50		U
67-64-1	Acetone	500	290	JB
108-10-1	4-Methyl-2-pentanone	200		U
591-78-6	2-hexanone	200		U
78-93-3	2-butanone	300		U
156-60-5	trans-1,2-Dichloroethene	75		U
156-59-2	cis-1,2-Dichloroethene	50	74	

FORM I VOA

1A
VOLATILE ORGANICS ANALYSIS DATA SHEET

SAMPLE NO.

MWA-6DUP

Project: RFA254 Date Sampled: 10/14/98

Lab Code: COMPU Case No.: 33902 SAS No.: SDG No.: 25401

Matrix: (soil/water) WATER Lab Sample ID: 914746

Sample wt/vol: 25.0 (g/mL) ML Lab File ID: CN014746B54.D

Level: (low/med) LOW Date Received: 10/17/98

% Moisture: not dec. _____ Date Analyzed: 10/22/98

GC Column:SP624 ID: 0.53 (mm) Dilution Factor: 100.0

Soil Extract Volume: _____(uL) Soil Aliquot Volume: _____(uL)

CONCENTRATION UNITS: UG/L

CAS NO.	COMPOUND	DL	CONC	Q
1330-20-7	Xylene (total)	50		U

FORM I VOA

1A
VOLATILE ORGANICS ANALYSIS DATA SHEET

SAMPLE NO.

MWB-1

Project: RFA254 Date Sampled: 10/14/98

Lab Code: COMPU Case No.: 33902 SAS No.: SDG No.: 25401

Matrix: (soil/water) WATER Lab Sample ID: 914730

Sample wt/vol: 25.0 (g/mL) ML Lab File ID: CN014730B54.D

Level: (low/med) LOW Date Received: 10/17/98

% Moisture: not dec. _____ Date Analyzed: 10/20/98

GC Column:SP624 ID: 0.53 (mm) Dilution Factor: 1.0

Soil Extract Volume: _____(uL) Soil Aliquot Volume: _____(uL)

CONCENTRATION UNITS: UG/L

CAS NO.	COMPOUND	DL	CONC	Q
74-83-9	Bromomethane	0.5		U
75-01-4	Vinyl Chloride	1		U
75-00-3	Chloroethane	0.5		U
75-09-2	Methylene Chloride	15	1	JB
75-35-4	1,1-Dichloroethene	0.8		U
75-34-3	1,1-Dichloroethane	0.5		U
67-66-3	Chloroform	0.8		U
107-06-2	1,2-Dichloroethane	0.8		U
71-55-6	1,1,1-Trichloroethane	0.8		U
56-23-5	Carbon Tetrachloride	1		U
75-27-4	Bromodichloromethane	0.5		U
10061-01-5	cis-1,3-Dichloropropene	0.5		U
79-01-6	Trichloroethene	0.8		U
124-48-1	Dibromochloromethane	0.5		U
79-00-5	1,1,2-Trichloroethane	0.8		U
71-43-2	Benzene	0.8		U
10061-02-6	trans-1,3-Dichloropropene	0.8		U
75-25-2	Bromoform	0.5		U
127-18-4	Tetrachloroethene	0.8		U
79-34-5	1,1,2,2-Tetrachloroethane	0.5		U
108-88-3	Toluene	0.8	0.4	J
108-90-7	Chlorobenzene	0.5		U
100-41-4	Ethylbenzene	0.5		U
100-42-5	Styrene	0.5		U
78-87-5	1,2-Dichloropropane	0.8		U
74-87-3	Chloromethane	1		U
75-15-0	Carbon disulfide	0.5		U
67-64-1	Acetone	5	180	E
108-10-1	4-Methyl-2-pentanone	2	1	J
591-78-6	2-hexanone	2	3	
78-93-3	2-butanone	3	49	
156-60-5	trans-1,2-Dichloroethene	0.8		U
156-59-2	cis-1,2-Dichloroethene	0.5		U

FORM I VOA

1A
VOLATILE ORGANICS ANALYSIS DATA SHEET

SAMPLE NO.

MWB-1

Project: RFA254 Date Sampled: 10/14/98

Lab Code: COMPU Case No.: 33902 SAS No.: SDG No.: 25401

Matrix: (soil/water) WATER Lab Sample ID: 914730

Sample wt/vol: 25.0 (g/mL) ML Lab File ID: CN014730B54.D

Level: (low/med) LOW Date Received: 10/17/98

% Moisture: not dec. _____ Date Analyzed: 10/20/98

GC Column:SP624 ID: 0.53 (mm) Dilution Factor: 1.0

Soil Extract Volume: _____(uL) Soil Aliquot Volume: _____(uL)

CONCENTRATION UNITS: UG/L

CAS NO.	COMPOUND	DL	CONC	Q
1330-20-7	Xylene (total)	0.5		U

FORM I VOA

1A
VOLATILE ORGANICS ANALYSIS DATA SHEET

SAMPLE NO.

MWB-1DL

Project: RFA254 Date Sampled: 10/14/98

Lab Code: COMPU Case No.: 33902 SAS No.: SDG No.: 25401

Matrix: (soil/water) WATER Lab Sample ID: 914730

Sample wt/vol: 25.0 (g/mL) ML Lab File ID: CR014730B54.D

Level: (low/med) LOW Date Received: 10/17/98

% Moisture: not dec. _____ Date Analyzed: 10/23/98

GC Column:SP624 ID: 0.53 (mm) Dilution Factor: 1.9

Soil Extract Volume: _____(uL) Soil Aliquot Volume: _____(uL)

CONCENTRATION UNITS: UG/L

CAS NO.	COMPOUND	DL	CONC	Q
74-83-9	Bromomethane	1		U
75-01-4	Vinyl Chloride	2		U
75-00-3	Chloroethane	1		U
75-09-2	Methylene Chloride	28	4	DJB
75-35-4	1,1-Dichloroethene	1		U
75-34-3	1,1-Dichloroethane	1		U
67-66-3	Chloroform	1		U
107-06-2	1,2-Dichloroethane	1		U
71-55-6	1,1,1-Trichloroethane	1		U
56-23-5	Carbon Tetrachloride	2		U
75-27-4	Bromodichloromethane	1		U
10061-01-5	cis-1,3-Dichloropropene	1		U
79-01-6	Trichloroethene	1		U
124-48-1	Dibromochloromethane	1		U
79-00-5	1,1,2-Trichloroethane	1		U
71-43-2	Benzene	1		U
10061-02-6	trans-1,3-Dichloropropene	1		U
75-25-2	Bromoform	1		U
127-18-4	Tetrachloroethene	1		U
79-34-5	1,1,2,2-Tetrachloroethane	1		U
108-88-3	Toluene	1		U
108-90-7	Chlorobenzene	1		U
100-41-4	Ethylbenzene	1		U
100-42-5	Styrene	1		U
78-87-5	1,2-Dichloropropane	1		U
74-87-3	Chloromethane	2		U
75-15-0	Carbon disulfide	1		U
67-64-1	Acetone	10	180	DB
108-10-1	4-Methyl-2-pentanone	4		U
591-78-6	2-hexanone	4	2	DJ
78-93-3	2-butanone	6	37	D
156-60-5	trans-1,2-Dichloroethene	1		U
156-59-2	cis-1,2-Dichloroethene	1		U

1A
VOLATILE ORGANICS ANALYSIS DATA SHEET

SAMPLE NO.

MWB-1DL

Project: RFA254 Date Sampled: 10/14/98

Lab Code: COMPU Case No.: 33902 SAS No.: SDG No.: 25401

Matrix: (soil/water) WATER Lab Sample ID: 914730

Sample wt/vol: 25.0 (g/mL) ML Lab File ID: CR014730B54.D

Level: (low/med) LOW Date Received: 10/17/98

% Moisture: not dec. _____ Date Analyzed: 10/23/98

GC Column:SP624 ID: 0.53 (mm) Dilution Factor: 1.9

Soil Extract Volume: _____(uL) Soil Aliquot Volume: _____(uL)

CONCENTRATION UNITS: UG/L

CAS NO.	COMPOUND	DL	CONC	Q
1330-20-7	Xylene (total)	1		U

FORM I VOA

1A
VOLATILE ORGANICS ANALYSIS DATA SHEET

SAMPLE NO.

MWB-2

Project: RFA254 Date Sampled: 10/14/98

Lab Code: COMPU Case No.: 33902 SAS No.: SDG No.: 25401

Matrix: (soil/water) WATER Lab Sample ID: 914738

Sample wt/vol: 25.0 (g/mL) ML Lab File ID: CN014738A54.D

Level: (low/med) LOW Date Received: 10/17/98

% Moisture: not dec. _____ Date Analyzed: 10/21/98

GC Column:SP624 ID: 0.53 (mm) Dilution Factor: 1.0

Soil Extract Volume: _____(uL) Soil Aliquot Volume: _____(uL)

CONCENTRATION UNITS: UG/L

CAS NO.	COMPOUND	DL	CONC	Q
74-83-9	Bromomethane	0.5		U
75-01-4	Vinyl Chloride	1		U
75-00-3	Chloroethane	0.5		U
75-09-2	Methylene Chloride	15	1	JB
75-35-4	1,1-Dichloroethene	0.8		U
75-34-3	1,1-Dichloroethane	0.5		U
67-66-3	Chloroform	0.8		U
107-06-2	1,2-Dichloroethane	0.8		U
71-55-6	1,1,1-Trichloroethane	0.8		U
56-23-5	Carbon Tetrachloride	1		U
75-27-4	Bromodichloromethane	0.5		U
10061-01-5	cis-1,3-Dichloropropene	0.5		U
79-01-6	Trichloroethene	0.8		U
124-48-1	Dibromochloromethane	0.5		U
79-00-5	1,1,2-Trichloroethane	0.8		U
71-43-2	Benzene	0.8		U
10061-02-6	trans-1,3-Dichloropropene	0.8		U
75-25-2	Bromoform	0.5		U
127-18-4	Tetrachloroethene	0.8	0.4	J
79-34-5	1,1,2,2-Tetrachloroethane	0.5		U
108-88-3	Toluene	0.8		U
108-90-7	Chlorobenzene	0.5		U
100-41-4	Ethylbenzene	0.5		U
100-42-5	Styrene	0.5		U
78-87-5	1,2-Dichloropropane	0.8		U
74-87-3	Chloromethane	1		U
75-15-0	Carbon disulfide	0.5		U
67-64-1	Acetone	5		U
108-10-1	4-Methyl-2-pentanone	2		U
591-78-6	2-hexanone	2		U
78-93-3	2-butanone	3		U
156-60-5	trans-1,2-Dichloroethene	0.8		U
156-59-2	cis-1,2-Dichloroethene	0.5		U

1A
VOLATILE ORGANICS ANALYSIS DATA SHEET

SAMPLE NO.

MWB-2

Project: RFA254 Date Sampled: 10/14/98

Lab Code: COMPU Case No.: 33902 SAS No.: SDG No.: 25401

Matrix: (soil/water) WATER Lab Sample ID: 914738

Sample wt/vol: 25.0 (g/mL) ML Lab File ID: CN014738A54.D

Level: (low/med) LOW Date Received: 10/17/98

% Moisture: not dec. _____ Date Analyzed: 10/21/98

GC Column:SP624 ID: 0.53 (mm) Dilution Factor: 1.0

Soil Extract Volume: _____(uL) Soil Aliquot Volume: _____(uL)

CONCENTRATION UNITS: UG/L

CAS NO.	COMPOUND	DL	CONC	Q
1330-20-7	Xylene (total)	0.5		U

FORM I VOA

1A
VOLATILE ORGANICS ANALYSIS DATA SHEET

SAMPLE NO.

MWB-4

Project: RFA254 Date Sampled: 10/14/98

Lab Code: COMPU Case No.: 33902 SAS No.: SDG No.: 25401

Matrix: (soil/water) WATER Lab Sample ID: 914732

Sample wt/vol: 25.0 (g/mL) ML Lab File ID: CN014732B54.D

Level: (low/med) LOW Date Received: 10/17/98

% Moisture: not dec. _____ Date Analyzed: 10/20/98

GC Column:SP624 ID: 0.53 (mm) Dilution Factor: 1.0

Soil Extract Volume: _____(uL) Soil Aliquot Volume: _____(uL)

CONCENTRATION UNITS: UG/L

CAS NO.	COMPOUND	DL	CONC	Q
74-83-9	Bromomethane	0.5		U
75-01-4	Vinyl Chloride	1		U
75-00-3	Chloroethane	0.5		U
75-09-2	Methylene Chloride	15	1	JB
75-35-4	1,1-Dichloroethene	0.8		U
75-34-3	1,1-Dichloroethane	0.5		U
67-66-3	Chloroform	0.8		U
107-06-2	1,2-Dichloroethane	0.8		U
71-55-6	1,1,1-Trichloroethane	0.8		U
56-23-5	Carbon Tetrachloride	1		U
75-27-4	Bromodichloromethane	0.5		U
10061-01-5	cis-1,3-Dichloropropene	0.5		U
79-01-6	Trichloroethene	0.8	3	
124-48-1	Dibromochloromethane	0.5		U
79-00-5	1,1,2-Trichloroethane	0.8		U
71-43-2	Benzene	0.8		U
10061-02-6	trans-1,3-Dichloropropene	0.8		U
75-25-2	Bromoform	0.5		U
127-18-4	Tetrachloroethene	0.8		U
79-34-5	1,1,2,2-Tetrachloroethane	0.5		U
108-88-3	Toluene	0.8		U
108-90-7	Chlorobenzene	0.5		U
100-41-4	Ethylbenzene	0.5		U
100-42-5	Styrene	0.5		U
78-87-5	1,2-Dichloropropane	0.8		U
74-87-3	Chloromethane	1		U
75-15-0	Carbon disulfide	0.5		U
67-64-1	Acetone	5	2	J
108-10-1	4-Methyl-2-pentanone	2		U
591-78-6	2-hexanone	2		U
78-93-3	2-butanone	3		U
156-60-5	trans-1,2-Dichloroethene	0.8		U
156-59-2	cis-1,2-Dichloroethene	0.5		U

FORM I VOA

1A
VOLATILE ORGANICS ANALYSIS DATA SHEET

SAMPLE NO.

MWB-4

Project: RFA254 Date Sampled: 10/14/98

Lab Code: COMPU Case No.: 33902 SAS No.: SDG No.: 25401

Matrix: (soil/water) WATER Lab Sample ID: 914732

Sample wt/vol: 25.0 (g/mL) ML Lab File ID: CN014732B54.D

Level: (low/med) LOW Date Received: 10/17/98

% Moisture: not dec. _____ Date Analyzed: 10/20/98

GC Column:SP624 ID: 0.53 (mm) Dilution Factor: 1.0

Soil Extract Volume: _____(uL) Soil Aliquot Volume: _____(uL)

CONCENTRATION UNITS: UG/L

CAS NO.	COMPOUND	DL	CONC	Q
1330-20-7	Xylene (total)	0.5		U

1A
VOLATILE ORGANICS ANALYSIS DATA SHEET

SAMPLE NO.

MWB-5

Project: RFA254 Date Sampled: 10/14/98

Lab Code: COMPU Case No.: 33902 SAS No.: SDG No.: 25401

Matrix: (soil/water) WATER Lab Sample ID: 914742

Sample wt/vol: 25.0 (g/mL) ML Lab File ID: CN014742A54.D

Level: (low/med) LOW Date Received: 10/17/98

% Moisture: not dec. _____ Date Analyzed: 10/21/98

GC Column:SP624 ID: 0.53 (mm) Dilution Factor: 1.0

Soil Extract Volume: _____(uL) Soil Aliquot Volume: _____(uL)

CONCENTRATION UNITS: UG/L

CAS NO.	COMPOUND	DL	CONC	Q
74-83-9	Bromomethane	0.5		U
75-01-4	Vinyl Chloride	1		U
75-00-3	Chloroethane	0.5		U
75-09-2	Methylene Chloride	15	1	JB
75-35-4	1,1-Dichloroethene	0.8		U
75-34-3	1,1-Dichloroethane	0.5		U
67-66-3	Chloroform	0.8		U
107-06-2	1,2-Dichloroethane	0.8		U
71-55-6	1,1,1-Trichloroethane	0.8	0.3	J
56-23-5	Carbon Tetrachloride	1		U
75-27-4	Bromodichloromethane	0.5		U
10061-01-5	cis-1,3-Dichloropropene	0.5		U
79-01-6	Trichloroethene	0.8	6	
124-48-1	Dibromochloromethane	0.5		U
79-00-5	1,1,2-Trichloroethane	0.8		U
71-43-2	Benzene	0.8		U
10061-02-6	trans-1,3-Dichloropropene	0.8		U
75-25-2	Bromoform	0.5		U
127-18-4	Tetrachloroethene	0.8	0.3	J
79-34-5	1,1,2,2-Tetrachloroethane	0.5		U
108-88-3	Toluene	0.8		U
108-90-7	Chlorobenzene	0.5		U
100-41-4	Ethylbenzene	0.5		U
100-42-5	Styrene	0.5		U
78-87-5	1,2-Dichloropropane	0.8		U
74-87-3	Chloromethane	1		U
75-15-0	Carbon disulfide	0.5		U
67-64-1	Acetone	5	1	J
108-10-1	4-Methyl-2-pentanone	2		U
591-78-6	2-hexanone	2		U
78-93-3	2-butanone	3		U
156-60-5	trans-1,2-Dichloroethene	0.8		U
156-59-2	cis-1,2-Dichloroethene	0.5	0.6	

1A
VOLATILE ORGANICS ANALYSIS DATA SHEET

SAMPLE NO.

MWB-5

Project: RFA254 Date Sampled: 10/14/98

Lab Code: COMPU Case No.: 33902 SAS No.: SDG No.: 25401

Matrix: (soil/water) WATER Lab Sample ID: 914742

Sample wt/vol: 25.0 (g/mL) ML Lab File ID: CN014742A54.D

Level: (low/med) LOW Date Received: 10/17/98

% Moisture: not dec. _____ Date Analyzed: 10/21/98

GC Column:SP624 ID: 0.53 (mm) Dilution Factor: 1.0

Soil Extract Volume: _____(uL) Soil Aliquot Volume: _____(uL)

CONCENTRATION UNITS: UG/L

CAS NO.	COMPOUND	DL	CONC	Q
1330-20-7	Xylene (total)	0.5		U

FORM I VOA

1A
VOLATILE ORGANICS ANALYSIS DATA SHEET

SAMPLE NO.

MWC-1

Project: RFA254 Date Sampled: 10/14/98

Lab Code: COMPU Case No.: 33902 SAS No.: SDG No.: 25401

Matrix: (soil/water) WATER Lab Sample ID: 914729

Sample wt/vol: 25.0 (g/mL) ML Lab File ID: CN014729B54.D

Level: (low/med) LOW Date Received: 10/17/98

% Moisture: not dec. _____ Date Analyzed: 10/20/98

GC Column:SP624 ID: 0.53 (mm) Dilution Factor: 10.0

Soil Extract Volume: _____(uL) Soil Aliquot Volume: _____(uL)

CONCENTRATION UNITS: UG/L

CAS NO.	COMPOUND	DL	CONC	Q
74-83-9	Bromomethane	5		U
75-01-4	Vinyl Chloride	10		U
75-00-3	Chloroethane	5		U
75-09-2	Methylene Chloride	150	10	JB
75-35-4	1,1-Dichloroethene	8		U
75-34-3	1,1-Dichloroethane	5		U
67-66-3	Chloroform	8		U
107-06-2	1,2-Dichloroethane	8	4	J
71-55-6	1,1,1-Trichloroethane	8		U
56-23-5	Carbon Tetrachloride	10		U
75-27-4	Bromodichloromethane	5		U
10061-01-5	cis-1,3-Dichloropropene	5		U
79-01-6	Trichloroethene	8		U
124-48-1	Dibromochloromethane	5	4	J
79-00-5	1,1,2-Trichloroethane	8	5	J
71-43-2	Benzene	8		U
10061-02-6	trans-1,3-Dichloropropene	8	9	
75-25-2	Bromoform	5	5	
127-18-4	Tetrachloroethene	8		U
79-34-5	1,1,2,2-Tetrachloroethane	5	8	
108-88-3	Toluene	8		U
108-90-7	Chlorobenzene	5		U
100-41-4	Ethylbenzene	5		U
100-42-5	Styrene	5		U
78-87-5	1,2-Dichloropropane	8	3	J
74-87-3	Chloromethane	10		U
75-15-0	Carbon disulfide	5		U
67-64-1	Acetone	50	740	
108-10-1	4-Methyl-2-pentanone	20	39	
591-78-6	2-hexanone	20	37	
78-93-3	2-butanone	30	42	
156-60-5	trans-1,2-Dichloroethene	8		U
156-59-2	cis-1,2-Dichloroethene	5		U

1A
VOLATILE ORGANICS ANALYSIS DATA SHEET

SAMPLE NO.

MWC-1

Project: RFA254 Date Sampled: 10/14/98

Lab Code: COMPU Case No.: 33902 SAS No.: SDG No.: 25401

Matrix: (soil/water) WATER Lab Sample ID: 914729

Sample wt/vol: 25.0 (g/mL) ML Lab File ID: CN014729B54.D

Level: (low/med) LOW Date Received: 10/17/98

% Moisture: not dec. _____ Date Analyzed: 10/20/98

GC Column:SP624 ID: 0.53 (mm) Dilution Factor: 10.0

Soil Extract Volume: _____(uL) Soil Aliquot Volume: _____(uL)

CONCENTRATION UNITS: UG/L

CAS NO.	COMPOUND	DL	CONC	Q
1330-20-7	Xylene (total)	5		U

1A
VOLATILE ORGANICS ANALYSIS DATA SHEET

SAMPLE NO.

MWC-2

Project: RFA254 Date Sampled: 10/14/98

Lab Code: COMPU Case No.: 33902 SAS No.: SDG No.: 25401

Matrix: (soil/water) WATER Lab Sample ID: 914739

Sample wt/vol: 25.0 (g/mL) ML Lab File ID: CN014739A54.D

Level: (low/med) LOW Date Received: 10/17/98

% Moisture: not dec. _____ Date Analyzed: 10/21/98

GC Column:SP624 ID: 0.53 (mm) Dilution Factor: 1.0

Soil Extract Volume: _____(uL) Soil Aliquot Volume: _____(uL)

CONCENTRATION UNITS: UG/L

CAS NO.	COMPOUND	DL	CONC	Q
74-83-9	Bromomethane	0.5		U
75-01-4	Vinyl Chloride	1		U
75-00-3	Chloroethane	0.5		U
75-09-2	Methylene Chloride	15	1	JB
75-35-4	1,1-Dichloroethene	0.8		U
75-34-3	1,1-Dichloroethane	0.5		U
67-66-3	Chloroform	0.8		U
107-06-2	1,2-Dichloroethane	0.8		U
71-55-6	1,1,1-Trichloroethane	0.8		U
56-23-5	Carbon Tetrachloride	1		U
75-27-4	Bromodichloromethane	0.5		U
10061-01-5	cis-1,3-Dichloropropene	0.5		U
79-01-6	Trichloroethene	0.8		U
124-48-1	Dibromochloromethane	0.5		U
79-00-5	1,1,2-Trichloroethane	0.8		U
71-43-2	Benzene	0.8		U
10061-02-6	trans-1,3-Dichloropropene	0.8		U
75-25-2	Bromoform	0.5		U
127-18-4	Tetrachloroethene	0.8		U
79-34-5	1,1,2,2-Tetrachloroethane	0.5		U
108-88-3	Toluene	0.8		U
108-90-7	Chlorobenzene	0.5		U
100-41-4	Ethylbenzene	0.5		U
100-42-5	Styrene	0.5		U
78-87-5	1,2-Dichloropropane	0.8		U
74-87-3	Chloromethane	1		U
75-15-0	Carbon disulfide	0.5		U
67-64-1	Acetone	5	2	J
108-10-1	4-Methyl-2-pentanone	2		U
591-78-6	2-hexanone	2		U
78-93-3	2-butanone	3		U
156-60-5	trans-1,2-Dichloroethene	0.8		U
156-59-2	cis-1,2-Dichloroethene	0.5		U

1A
VOLATILE ORGANICS ANALYSIS DATA SHEET

SAMPLE NO.

MWC-2

Project: RFA254 Date Sampled: 10/14/98

Lab Code: COMPU Case No.: 33902 SAS No.: SDG No.: 25401

Matrix: (soil/water) WATER Lab Sample ID: 914739

Sample wt/vol: 25.0 (g/mL) ML Lab File ID: CN014739A54.D

Level: (low/med) LOW Date Received: 10/17/98

% Moisture: not dec. _____ Date Analyzed: 10/21/98

GC Column:SP624 ID: 0.53 (mm) Dilution Factor: 1.0

Soil Extract Volume: _____(uL) Soil Aliquot Volume: _____(uL)

CONCENTRATION UNITS: UG/L

CAS NO.	COMPOUND	DL	CONC	Q
1330-20-7	Xylene (total)	0.5		U

FORM I VOA

1A
VOLATILE ORGANICS ANALYSIS DATA SHEET

SAMPLE NO.

PZ-13I

Project: RFA254 | Date Sampled: 10/14/98

Lab Code: COMPU | Case No.: 33902 | SAS No.: | SDG No.: 23401

Matrix: (soil/water) WATER | Lab Sample ID: 914745

Sample wt/vol: 25.0 (g/mL) ML | Lab File ID: CN014745B54.D

Level: (low/med) LOW | Date Received: 10/17/98

% Moisture: not dec. _____ | Date Analyzed: 10/22/98

GC Column:SP624 ID: 0.53 (mm) | Dilution Factor: 50.0

Soil Extract Volume: _____(uL) | Soil Aliquot Volume: _____(uL)

CONCENTRATION UNITS: UG/L

CAS NO.	COMPOUND	DL	CONC	Q
74-83-9	Bromomethane	25		U
75-01-4	Vinyl Chloride	50		U
75-00-3	Chloroethane	25		U
75-09-2	Methylene Chloride	750	49	JB
75-35-4	1,1-Dichloroethene	38	30	J
75-34-3	1,1-Dichloroethane	25	34	
67-66-3	Chloroform	38		U
107-06-2	1,2-Dichloroethane	38		U
71-55-6	1,1,1-Trichloroethane	38	300	
56-23-5	Carbon Tetrachloride	50		U
75-27-4	Bromodichloromethane	25		U
10061-01-5	cis-1,3-Dichloropropene	25		U
79-01-6	Trichloroethene	38	140	
124-48-1	Dibromochloromethane	25		U
79-00-5	1,1,2-Trichloroethane	38		U
71-43-2	Benzene	38		U
10061-02-6	trans-1,3-Dichloropropene	38		U
75-25-2	Bromoform	25		U
127-18-4	Tetrachloroethene	38	800	
79-34-5	1,1,2,2-Tetrachloroethane	25		U
108-88-3	Toluene	38		U
108-90-7	Chlorobenzene	25		U
100-41-4	Ethylbenzene	25		U
100-42-5	Styrene	25		U
78-87-5	1,2-Dichloropropane	38		U
74-87-3	Chloromethane	50		U
75-15-0	Carbon disulfide	25		U
67-64-1	Acetone	250	53	JB
108-10-1	4-Methyl-2-pentanone	100		U
591-78-6	2-hexanone	100		U
78-93-3	2-butanone	150		U
156-60-5	trans-1,2-Dichloroethene	38		U
156-59-2	cis-1,2-Dichloroethene	25	47	

1A
VOLATILE ORGANICS ANALYSIS DATA SHEET

SAMPLE NO.

PZ-13I

Project: RFA254 Date Sampled: 10/14/98

Lab Code: COMPU Case No.: 33902 SAS No.: SDG No.: 25401

Matrix: (soil/water) WATER Lab Sample ID: 914745

Sample wt/vol: 25.0 (g/mL) ML Lab File ID: CN014745B54.D

Level: (low/med) LOW Date Received: 10/17/98

% Moisture: not dec. _____ Date Analyzed: 10/22/98

GC Column:SP624 ID: 0.53 (mm) Dilution Factor: 50.0

Soil Extract Volume: _____(uL) Soil Aliquot Volume: _____(uL)

CONCENTRATION UNITS: UG/L

CAS NO.	COMPOUND	DL	CONC	Q
1330-20-7	Xylene (total)	25		U

1A
VOLATILE ORGANICS ANALYSIS DATA SHEET

SAMPLE NO.

PZ-19I

Project: RFA254 Date Sampled: 10/14/98

Lab Code: COMPU Case No.: 33902 SAS No.: SDG No.: 25401

Matrix: (soil/water) WATER Lab Sample ID: 914735

Sample wt/vol: 25.0 (g/mL) ML Lab File ID: CN014735A54.D

Level: (low/med) LOW Date Received: 10/17/98

% Moisture: not dec. _____ Date Analyzed: 10/21/98

GC Column:SP624 ID: 0.53 (mm) Dilution Factor: 1.0

Soil Extract Volume: _____(uL) Soil Aliquot Volume: _____(uL)

CONCENTRATION UNITS: UG/L

CAS NO.	COMPOUND	DL	CONC	Q
74-83-9	Bromomethane	0.5		U
75-01-4	Vinyl Chloride	1		U
75-00-3	Chloroethane	0.5		U
75-09-2	Methylene Chloride	15	2	JB
75-35-4	1,1-Dichloroethene	0.8		U
75-34-3	1,1-Dichloroethane	0.5		U
67-66-3	Chloroform	0.8		U
107-06-2	1,2-Dichloroethane	0.8		U
71-55-6	1,1,1-Trichloroethane	0.8		U
56-23-5	Carbon Tetrachloride	1		U
75-27-4	Bromodichloromethane	0.5		U
10061-01-5	cis-1,3-Dichloropropene	0.5		U
79-01-6	Trichloroethene	0.8	4	
124-48-1	Dibromochloromethane	0.5		U
79-00-5	1,1,2-Trichloroethane	0.8		U
71-43-2	Benzene	0.8		U
10061-02-6	trans-1,3-Dichloropropene	0.8		U
75-25-2	Bromoform	0.5		U
127-18-4	Tetrachloroethene	0.8	0.3	J
79-34-5	1,1,2,2-Tetrachloroethane	0.5		U
108-88-3	Toluene	0.8		U
108-90-7	Chlorobenzene	0.5		U
100-41-4	Ethylbenzene	0.5		U
100-42-5	Styrene	0.5		U
78-87-5	1,2-Dichloropropane	0.8		U
74-87-3	Chloromethane	1		U
75-15-0	Carbon disulfide	0.5		U
67-64-1	Acetone	5	0.9	J
108-10-1	4-Methyl-2-pentanone	2		U
591-78-6	2-hexanone	2		U
78-93-3	2-butanone	3		U
156-60-5	trans-1,2-Dichloroethene	0.8	0.5	J
156-59-2	cis-1,2-Dichloroethene	0.5	4	

1A
VOLATILE ORGANICS ANALYSIS DATA SHEET

SAMPLE NO.

PZ-19I

Project: RFA254 Date Sampled: 10/14/98

Lab Code: COMPU Case No.: 33902 SAS No.: SDG No.: 25401

Matrix: (soil/water) WATER Lab Sample ID: 914735

Sample wt/vol: 25.0 (g/mL) ML Lab File ID: CN014735A54.D

Level: (low/med) LOW Date Received: 10/17/98

% Moisture: not dec. _____ Date Analyzed: 10/21/98

GC Column:SP624 ID: 0.53 (mm) Dilution Factor: 1.0

Soil Extract Volume: _____(uL) Soil Aliquot Volume: _____(uL)

CONCENTRATION UNITS: UG/L

CAS NO.	COMPOUND	DL	CONC	Q
1330-20-7	Xylene (total)	0.5		U

FORM I VOA

1A
VOLATILE ORGANICS ANALYSIS DATA SHEET

SAMPLE NO.

PZ-20D

Project: RFA254 Date Sampled: 10/14/98

Lab Code: COMPU Case No.: 33902 SAS No.: SDG No.: 25401

Matrix: (soil/water) WATER Lab Sample ID: 914736

Sample wt/vol: 25.0 (g/mL) ML Lab File ID: CN014736A54.D

Level: (low/med) LOW Date Received: 10/17/98

% Moisture: not dec. _____ Date Analyzed: 10/21/98

GC Column:SP624 ID: 0.53 (mm) Dilution Factor: 1.0

Soil Extract Volume: _____(uL) Soil Aliquot Volume: _____(uL)

CONCENTRATION UNITS: UG/L

CAS NO.	COMPOUND	DL	CONC	Q
74-83-9	Bromomethane	0.5		U
75-01-4	Vinyl Chloride	1		U
75-00-3	Chloroethane	0.5		U
75-09-2	Methylene Chloride	15	1	JB
75-35-4	1,1-Dichloroethene	0.8		U
75-34-3	1,1-Dichloroethane	0.5		U
67-66-3	Chloroform	0.8		U
107-06-2	1,2-Dichloroethane	0.8		U
71-55-6	1,1,1-Trichloroethane	0.8		U
56-23-5	Carbon Tetrachloride	1		U
75-27-4	Bromodichloromethane	0.5		U
10061-01-5	cis-1,3-Dichloropropene	0.5		U
79-01-6	Trichloroethene	0.8		U
124-48-1	Dibromochloromethane	0.5		U
79-00-5	1,1,2-Trichloroethane	0.8		U
71-43-2	Benzene	0.8		U
10061-02-6	trans-1,3-Dichloropropene	0.8		U
75-25-2	Bromoform	0.5		U
127-18-4	Tetrachloroethene	0.8		U
79-34-5	1,1,2,2-Tetrachloroethane	0.5		U
108-88-3	Toluene	0.8		U
108-90-7	Chlorobenzene	0.5		U
100-41-4	Ethylbenzene	0.5		U
100-42-5	Styrene	0.5		U
78-87-5	1,2-Dichloropropane	0.8		U
74-87-3	Chloromethane	1		U
75-15-0	Carbon disulfide	0.5	0.3	J
67-64-1	Acetone	5	1	J
108-10-1	4-Methyl-2-pentanone	2		U
591-78-6	2-hexanone	2		U
78-93-3	2-butanone	3		U
156-60-5	trans-1,2-Dichloroethene	0.8		U
156-59-2	cis-1,2-Dichloroethene	0.5		U

1A
VOLATILE ORGANICS ANALYSIS DATA SHEET

SAMPLE NO.

PZ-20D

Project: RFA254 Date Sampled: 10/14/98

Lab Code: COMPU Case No.: 33902 SAS No.: SDG No.: 25401

Matrix: (soil/water) WATER Lab Sample ID: 914736

Sample wt/vol: 25.0 (g/mL) ML Lab File ID: CN014736A54.D

Level: (low/med) LOW Date Received: 10/17/98

% Moisture: not dec. _____ Date Analyzed: 10/21/98

GC Column:SP624 ID: 0.53 (mm) Dilution Factor: 1.0

Soil Extract Volume: _____(uL) Soil Aliquot Volume: _____(uL)

CONCENTRATION UNITS: UG/L

CAS NO.	COMPOUND	DL	CONC	Q
1330-20-7	Xylene (total)	0.5		U

FORM I VOA

1A
VOLATILE ORGANICS ANALYSIS DATA SHEET

SAMPLE NO.

PZ-21I

Project: RFA254 Date Sampled: 10/14/98

Lab Code: COMPU Case No.: 33902 SAS No.: SDG No.: 25401

Matrix: (soil/water) WATER Lab Sample ID: 914733

Sample wt/vol: 25.0 (g/mL) ML Lab File ID: CN014733A54.D

Level: (low/med) LOW Date Received: 10/17/98

% Moisture: not dec. _____ Date Analyzed: 10/21/98

GC Column:SP624 ID: 0.53 (mm) Dilution Factor: 1.0

Soil Extract Volume: _____(uL) Soil Aliquot Volume: _____(uL)

CONCENTRATION UNITS: UG/L

CAS NO.	COMPOUND	DL	CONC	Q
74-83-9	Bromomethane	0.5		U
75-01-4	Vinyl Chloride	1		U
75-00-3	Chloroethane	0.5		U
75-09-2	Methylene Chloride	15	2	JB
75-35-4	1,1-Dichloroethene	0.8		U
75-34-3	1,1-Dichloroethane	0.5		U
67-66-3	Chloroform	0.8		U
107-06-2	1,2-Dichloroethane	0.8		U
71-55-6	1,1,1-Trichloroethane	0.8		U
56-23-5	Carbon Tetrachloride	1		U
75-27-4	Bromodichloromethane	0.5		U
10061-01-5	cis-1,3-Dichloropropene	0.5		U
79-01-6	Trichloroethene	0.8	4	
124-48-1	Dibromochloromethane	0.5		U
79-00-5	1,1,2-Trichloroethane	0.8		U
71-43-2	Benzene	0.8		U
10061-02-6	trans-1,3-Dichloropropene	0.8		U
75-25-2	Bromoform	0.5		U
127-18-4	Tetrachloroethene	0.8		U
79-34-5	1,1,2,2-Tetrachloroethane	0.5		U
108-88-3	Toluene	0.8		U
108-90-7	Chlorobenzene	0.5		U
100-41-4	Ethylbenzene	0.5		U
100-42-5	Styrene	0.5		U
78-87-5	1,2-Dichloropropane	0.8		U
74-87-3	Chloromethane	1		U
75-15-0	Carbon disulfide	0.5		U
67-64-1	Acetone	5	3	J
108-10-1	4-Methyl-2-pentanone	2		U
591-78-6	2-hexanone	2		U
78-93-3	2-butanone	3		U
156-60-5	trans-1,2-Dichloroethene	0.8	0.5	J
156-59-2	cis-1,2-Dichloroethene	0.5	4	

1A
VOLATILE ORGANICS ANALYSIS DATA SHEET

SAMPLE NO.

PZ-21I

Project: RFA254 Date Sampled: 10/14/98

Lab Code: COMPU Case No.: 33902 SAS No.: SDG No.: 25401

Matrix: (soil/water) WATER Lab Sample ID: 914733

Sample wt/vol: 25.0 (g/mL) ML Lab File ID: CN014733A54.D

Level: (low/med) LOW Date Received: 10/17/98

% Moisture: not dec. _____ Date Analyzed: 10/21/98

GC Column:SP624 ID: 0.53 (mm) Dilution Factor: 1.0

Soil Extract Volume: _____(uL) Soil Aliquot Volume: _____(uL)

CONCENTRATION UNITS: UG/L

CAS NO.	COMPOUND	DL	CONC	Q
1330-20-7	Xylene (total)	0.5		U

1A
VOLATILE ORGANICS ANALYSIS DATA SHEET

SAMPLE NO.

PZ-22I

Project: RFA254 | Date Sampled: 10/14/98

Lab Code: COMPU | Case No.: 33902 | SAS No.: | SDG No.: 25401

Matrix: (soil/water) WATER | Lab Sample ID: 914731

Sample wt/vol: 25.0 (g/mL) ML | Lab File ID: CN014731B54.D

Level: (low/med) LOW | Date Received: 10/17/98

% Moisture: not dec. _____ | Date Analyzed: 10/20/98

GC Column: SP624 | ID: 0.53 (mm) | Dilution Factor: 1.0

Soil Extract Volume: _____(uL) | Soil Aliquot Volume: _____(uL)

CONCENTRATION UNITS: UG/L

CAS NO.	COMPOUND	DL	CONC	Q
74-83-9	Bromomethane	0.5		U
75-01-4	Vinyl Chloride	1		U
75-00-3	Chloroethane	0.5		U
75-09-2	Methylene Chloride	15	1	JB
75-35-4	1,1-Dichloroethene	0.8		U
75-34-3	1,1-Dichloroethane	0.5		U
67-66-3	Chloroform	0.8		U
107-06-2	1,2-Dichloroethane	0.8		U
71-55-6	1,1,1-Trichloroethane	0.8	0.4	J
56-23-5	Carbon Tetrachloride	1		U
75-27-4	Bromodichloromethane	0.5		U
10061-01-5	cis-1,3-Dichloropropene	0.5		U
79-01-6	Trichloroethene	0.8	15	
124-48-1	Dibromochloromethane	0.5		U
79-00-5	1,1,2-Trichloroethane	0.8		U
71-43-2	Benzene	0.8		U
10061-02-6	trans-1,3-Dichloropropene	0.8		U
75-25-2	Bromoform	0.5		U
127-18-4	Tetrachloroethene	0.8		U
79-34-5	1,1,2,2-Tetrachloroethane	0.5		U
108-88-3	Toluene	0.8		U
108-90-7	Chlorobenzene	0.5		U
100-41-4	Ethylbenzene	0.5		U
100-42-5	Styrene	0.5		U
78-87-5	1,2-Dichloropropane	0.8		U
74-87-3	Chloromethane	1		U
75-15-0	Carbon disulfide	0.5	2	
67-64-1	Acetone	5	8	
108-10-1	4-Methyl-2-pentanone	2	0.3	J
591-78-6	2-hexanone	2	0.4	J
78-93-3	2-butanone	3		U
156-60-5	trans-1,2-Dichloroethene	0.8		U
156-59-2	cis-1,2-Dichloroethene	0.5	0.4	J

1A
VOLATILE ORGANICS ANALYSIS DATA SHEET

SAMPLE NO.

PZ-22I

Project: RFA254 Date Sampled: 10/14/98

Lab Code: COMPU Case No.: 33902 SAS No.: SDG No.: 25401

Matrix: (soil/water) WATER Lab Sample ID: 914731

Sample wt/vol: 25.0 (g/mL) ML Lab File ID: CN014731B54.D

Level: (low/med) LOW Date Received: 10/17/98

% Moisture: not dec. _____ Date Analyzed: 10/20/98

GC Column:SP624 ID: 0.53 (mm) Dilution Factor: 1.0

Soil Extract Volume: _____(uL) Soil Aliquot Volume: _____(uL)

CONCENTRATION UNITS: UG/L

CAS NO.	COMPOUND	DL	CONC	Q
1330-20-7	Xylene (total)	0.5		U

FORM I VOA

1A
VOLATILE ORGANICS ANALYSIS DATA SHEET

SAMPLE NO.

PZ-7I

Project: RFA254 Date Sampled: 10/14/98

Lab Code: COMPU Case No.: 33902 SAS No.: SDG No.: 25401

Matrix: (soil/water) WATER Lab Sample ID: 914741

Sample wt/vol: 25.0 (g/mL) ML Lab File ID: CN014741A54.D

Level: (low/med) LOW Date Received: 10/17/98

% Moisture: not dec. _____ Date Analyzed: 10/21/98

GC Column:SP624 ID: 0.53 (mm) Dilution Factor: 1.0

Soil Extract Volume: _____(uL) Soil Aliquot Volume: _____(uL)

CONCENTRATION UNITS: UG/L

CAS NO.	COMPOUND	DL	CONC	Q
74-83-9	Bromomethane	0.5		U
75-01-4	Vinyl Chloride	1		U
75-00-3	Chloroethane	0.5		U
75-09-2	Methylene Chloride	15	1	JB
75-35-4	1,1-Dichloroethene	0.8		U
75-34-3	1,1-Dichloroethane	0.5	0.4	J
67-66-3	Chloroform	0.8		U
107-06-2	1,2-Dichloroethane	0.8		U
71-55-6	1,1,1-Trichloroethane	0.8	0.3	J
56-23-5	Carbon Tetrachloride	1		U
75-27-4	Bromodichloromethane	0.5		U
10061-01-5	cis-1,3-Dichloropropene	0.5		U
79-01-6	Trichloroethene	0.8	2	
124-48-1	Dibromochloromethane	0.5		U
79-00-5	1,1,2-Trichloroethane	0.8		U
71-43-2	Benzene	0.8		U
10061-02-6	trans-1,3-Dichloropropene	0.8		U
75-25-2	Bromoform	0.5		U
127-18-4	Tetrachloroethene	0.8	1	
79-34-5	1,1,2,2-Tetrachloroethane	0.5		U
108-88-3	Toluene	0.8		U
108-90-7	Chlorobenzene	0.5		U
100-41-4	Ethylbenzene	0.5		U
100-42-5	Styrene	0.5		U
78-87-5	1,2-Dichloropropane	0.8		U
74-87-3	Chloromethane	1		U
75-15-0	Carbon disulfide	0.5		U
67-64-1	Acetone	5	2	J
108-10-1	4-Methyl-2-pentanone	2		U
591-78-6	2-hexanone	2		U
78-93-3	2-butanone	3		U
156-60-5	trans-1,2-Dichloroethene	0.8		U
156-59-2	cis-1,2-Dichloroethene	0.5	3	

FORM I VOA

1A
VOLATILE ORGANICS ANALYSIS DATA SHEET

SAMPLE NO.

PZ-7I

Project: RFA254 Date Sampled: 10/14/98

Lab Code: COMPU Case No.: 33902 SAS No.: SDG No.: 25401

Matrix: (soil/water) WATER Lab Sample ID: 914741

Sample wt/vol: 25.0 (g/mL) ML Lab File ID: CN014741A54.D

Level: (low/med) LOW Date Received: 10/17/98

% Moisture: not dec. _____ Date Analyzed: 10/21/98

GC Column:SP624 ID: 0.53 (mm) Dilution Factor: 1.0

Soil Extract Volume: _____(uL) Soil Aliquot Volume: _____(uL)

CONCENTRATION UNITS: UG/L

CAS NO.	COMPOUND	DL	CONC	Q
1330-20-7	Xylene (total)	0.5		U

FORM I VOA

4A
VOLATILE METHOD BLANK SUMMARY

SAMPLE NO.

VBLKKM

Lab Name: COMPUCHEM Contract: 501112

Lab Code: COMPU Case No.: 33902 SAS No.: SDG No.: 25401

Lab File ID: CB981020A54.D Lab Sample ID: VBLKKM

Date Analyzed: 10/20/98 Time Analyzed: 1122

GC Column:SP624 ID: 0.53 (mm) Heated Purge: (Y/N) N

Instrument ID: F50054

THIS METHOD BLANK APPLIES TO THE FOLLOWING SAMPLES, MS AND MSD

	SAMPLE NO.	LAB SAMPLE ID	LAB FILE ID	TIME ANALYZED
01	VLCS46	914269	CN014269A54.D	1219
02	MWC-1	914729	CN014729B54.D	1838
03	MWB-1	914730	CN014730B54.D	1915
04	PZ-22I	914731	CN014731B54.D	1958
05	MWB-4	914732	CN014732B54.D	2035
06				
07				
08				
09				
10				
11				
12				
13				
14				
15				
16				
17				
18				
19				
20				
21				
22				
23				
24				
25				
26				
27				
28				
29				
30				

COMMENTS:

1A
VOLATILE ORGANICS ANALYSIS DATA SHEET

SAMPLE NO.

VBLKKM

Project: Date Sampled: _____

Lab Code: COMPU Case No.: 33902 SAS No.: SDG No.: 25401

Matrix: (soil/water) WATER Lab Sample ID: VBLKKM

Sample wt/vol: 25.0 (g/mL) ML Lab File ID: CB981020A54.D

Level: (low/med) LOW Date Received: _____

% Moisture: not dec. _____ Date Analyzed: 10/20/98

GC Column:SP624 ID: 0.53 (mm) Dilution Factor: 1.0

Soil Extract Volume: _____(uL) Soil Aliquot Volume: _____(uL)

CONCENTRATION UNITS: UG/L

CAS NO.	COMPOUND	DL	CONC	Q
74-83-9	Bromomethane	0.5		U
75-01-4	Vinyl Chloride	1		U
75-00-3	Chloroethane	0.5		U
75-09-2	Methylene Chloride	15	4	J
75-35-4	1,1-Dichloroethene	0.8		U
75-34-3	1,1-Dichloroethane	0.5		U
67-66-3	Chloroform	0.8		U
107-06-2	1,2-Dichloroethane	0.8		U
71-55-6	1,1,1-Trichloroethane	0.8		U
56-23-5	Carbon Tetrachloride	1		U
75-27-4	Bromodichloromethane	0.5		U
10061-01-5	cis-1,3-Dichloropropene	0.5		U
79-01-6	Trichloroethene	0.8		U
124-48-1	Dibromochloromethane	0.5		U
79-00-5	1,1,2-Trichloroethane	0.8		U
71-43-2	Benzene	0.8		U
10061-02-6	trans-1,3-Dichloropropene	0.8		U
75-25-2	Bromoform	0.5		U
127-18-4	Tetrachloroethene	0.8		U
79-34-5	1,1,2,2-Tetrachloroethane	0.5		U
108-88-3	Toluene	0.8		U
108-90-7	Chlorobenzene	0.5		U
100-41-4	Ethylbenzene	0.5		U
100-42-5	Styrene	0.5		U
78-87-5	1,2-Dichloropropane	0.8		U
74-87-3	Chloromethane	1		U
75-15-0	Carbon disulfide	0.5		U
67-64-1	Acetone	5		U
108-10-1	4-Methyl-2-pentanone	2		U
591-78-6	2-hexanone	2		U
78-93-3	2-butanone	3		U
156-60-5	trans-1,2-Dichloroethene	0.8		U
156-59-2	cis-1,2-Dichloroethene	0.5		U

1A
VOLATILE ORGANICS ANALYSIS DATA SHEET

SAMPLE NO.

VBLKKM

Project: Date Sampled: _____

Lab Code: COMPU Case No.: 33902 SAS No.: SDG No.: 25401

Matrix: (soil/water) WATER Lab Sample ID: VBLKKM

Sample wt/vol: 25.0 (g/mL) ML Lab File ID: CB981020A54.D

Level: (low/med) LOW Date Received: _____

% Moisture: not dec. _____ Date Analyzed: 10/20/98

GC Column:SP624 ID: 0.53 (mm) Dilution Factor: 1.0

Soil Extract Volume: _____(uL) Soil Aliquot Volume: _____(uL)

CONCENTRATION UNITS: UG/L

CAS NO.	COMPOUND	DL	CONC	Q
1330-20-7	Xylene (total)	0.5		U

4A
VOLATILE METHOD BLANK SUMMARY

SAMPLE NO.

VBLKKN

Lab Name: COMPUCHEM Contract: 501112

Lab Code: COMPU Case No.: 33902 SAS No.: SDG No.: 25401

Lab File ID: CB981021A54.D Lab Sample ID: VBLKKN

Date Analyzed: 10/21/98 Time Analyzed: 0908

GC Column:SP624 ID: 0.53 (mm) Heated Purge: (Y/N) N

Instrument ID: F50054

THIS METHOD BLANK APPLIES TO THE FOLLOWING SAMPLES, MS AND MSD

	SAMPLE NO.	LAB SAMPLE ID	LAB FILE ID	TIME ANALYZED
01	VLCS69	915022	CN015022A54.D	0951
02	E101498-1	914726	CN014726A54.D	1041
03	PZ-21I	914733	CN014733A54.D	1116
04	MW-19S	914734	CN014734A54.D	1151
05	PZ-19I	914735	CN014735A54.D	1226
06	PZ-20D	914736	CN014736A54.D	1300
07	MWB-2	914738	CN014738A54.D	1409
08	MWC-2	914739	CN014739A54.D	1519
09	PZ-7I	914741	CN014741A54.D	1711
10	MWB-5	914742	CN014742A54.D	1745
11	MW-18S	914737	CN014737A54.D	1824
12	MW-7S	914740	CN014740A54.D	1858
13	MWA-5	914743	CN014743A54.D	1934
14				
15				
16				
17				
18				
19				
20				
21				
22				
23				
24				
25				
26				
27				
28				
29				
30				

COMMENTS:

1A
VOLATILE ORGANICS ANALYSIS DATA SHEET

SAMPLE NO.

VBLKKN

Project: RFA254 Date Sampled: _____

Lab Code: COMPU Case No.: 33902 SAS No.: SDG No.: 25401

Matrix: (soil/water) WATER Lab Sample ID: VBLKKN

Sample wt/vol: 25.0 (g/mL) ML Lab File ID: CB981021A54.D

Level: (low/med) LOW Date Received: _____

% Moisture: not dec. _____ Date Analyzed: 10/21/98

GC Column:SP624 ID: 0.53 (mm) Dilution Factor: 1.0

Soil Extract Volume: _____(uL) Soil Aliquot Volume: _____(uL)

CONCENTRATION UNITS: UG/L

CAS NO.	COMPOUND	DL	CONC	Q
74-83-9	Bromomethane	0.5		U
75-01-4	Vinyl Chloride	1		U
75-00-3	Chloroethane	0.5		U
75-09-2	Methylene Chloride	15	0.8	J
75-35-4	1,1-Dichloroethene	0.8		U
75-34-3	1,1-Dichloroethane	0.5		U
67-66-3	Chloroform	0.8		U
107-06-2	1,2-Dichloroethane	0.8		U
71-55-6	1,1,1-Trichloroethane	0.8		U
56-23-5	Carbon Tetrachloride	1		U
75-27-4	Bromodichloromethane	0.5		U
10061-01-5	cis-1,3-Dichloropropene	0.5		U
79-01-6	Trichloroethene	0.8		U
124-48-1	Dibromochloromethane	0.5		U
79-00-5	1,1,2-Trichloroethane	0.8		U
71-43-2	Benzene	0.8		U
10061-02-6	trans-1,3-Dichloropropene	0.8		U
75-25-2	Bromoform	0.5		U
127-18-4	Tetrachloroethene	0.8		U
79-34-5	1,1,2,2-Tetrachloroethane	0.5		U
108-88-3	Toluene	0.8		U
108-90-7	Chlorobenzene	0.5		U
100-41-4	Ethylbenzene	0.5		U
100-42-5	Styrene	0.5		U
78-87-5	1,2-Dichloropropane	0.8		U
74-87-3	Chloromethane	1		U
75-15-0	Carbon disulfide	0.5		U
67-64-1	Acetone	5		U
108-10-1	4-Methyl-2-pentanone	2		U
591-78-6	2-hexanone	2		U
78-93-3	2-butanone	3		U
156-60-5	trans-1,2-Dichloroethene	0.8		U
156-59-2	cis-1,2-Dichloroethene	0.5		U

1A
VOLATILE ORGANICS ANALYSIS DATA SHEET

SAMPLE NO.

VBLKKN

Project: RFA254 Date Sampled: _____

Lab Code: COMPU Case No.: 33902 SAS No.: SDG No.: 25401

Matrix: (soil/water) WATER Lab Sample ID: VBLKKN

Sample wt/vol: 25.0 (g/mL) ML Lab File ID: CB981021A54.D

Level: (low/med) LOW Date Received: _____

% Moisture: not dec. _____ Date Analyzed: 10/21/98

GC Column:SP624 ID: 0.53 (mm) Dilution Factor: 1.0

Soil Extract Volume: _____(uL) Soil Aliquot Volume: _____(uL)

CONCENTRATION UNITS: UG/L

CAS NO.	COMPOUND	DL	CONC	Q
1330-20-7	Xylene (total)	0.5		U

4A
VOLATILE METHOD BLANK SUMMARY

SAMPLE NO.

VBLKLF

Lab Name: COMPUCHEM Contract: 501112

Lab Code: COMPU Case No.: 33902 SAS No.: SDG No.: 25401

Lab File ID: CB981022B54.D Lab Sample ID: VBLKLF

Date Analyzed: 10/22/98 Time Analyzed: 1955

GC Column:SP624 ID: 0.53 (mm) Heated Purge: (Y/N) N

Instrument ID: F50054

THIS METHOD BLANK APPLIES TO THE FOLLOWING SAMPLES, MS AND MSD

	SAMPLE NO.	LAB SAMPLE ID	LAB FILE ID	TIME ANALYZED
01	VLCS39	915825	CN015825B54.D	2104
02	MWA-6	914744	CN014744B54.D	2149
03	PZ-13I	914745	CN014745B54.D	2223
04	MWA-6DUP	914746	CN014746B54.D	2257
05	MWB-1DL	914730	CR014730B54.D	0005
06	MWA-3MS	914727	CN014727B54.D	0039
07	MWA-3MSD	914728	CN014728B54.D	0113
08	MWA-6DL	914744	CR014744B54.D	0147
09	MWA-3	914758	CR014758B54.D	0221
10				
11				
12				
13				
14				
15				
16				
17				
18				
19				
20				
21				
22				
23				
24				
25				
26				
27				
28				
29				
30				

COMMENTS:

1A
VOLATILE ORGANICS ANALYSIS DATA SHEET

SAMPLE NO.

VBLKLF

Project: RFA254 Date Sampled: _____

Lab Code: COMPU Case No.: 33902 SAS No.: SDG No.: 25401

Matrix: (soil/water) WATER Lab Sample ID: VBLKLF

Sample wt/vol: 25.0 (g/mL) ML Lab File ID: CB981022B54.D

Level: (low/med) LOW Date Received: _____

% Moisture: not dec. _____ Date Analyzed: 10/22/98

GC Column:SP624 ID: 0.53 (mm) Dilution Factor: 1.0

Soil Extract Volume: _____(uL) Soil Aliquot Volume: _____(uL)

CONCENTRATION UNITS: UG/L

CAS NO.	COMPOUND	DL	CONC	Q
74-83-9	Bromomethane	0.5		U
75-01-4	Vinyl Chloride	1		U
75-00-3	Chloroethane	0.5		U
75-09-2	Methylene Chloride	15	0.8	J
75-35-4	1,1-Dichloroethene	0.8		U
75-34-3	1,1-Dichloroethane	0.5		U
67-66-3	Chloroform	0.8		U
107-06-2	1,2-Dichloroethane	0.8		U
71-55-6	1,1,1-Trichloroethane	0.8		U
56-23-5	Carbon Tetrachloride	1		U
75-27-4	Bromodichloromethane	0.5		U
10061-01-5	cis-1,3-Dichloropropene	0.5		U
79-01-6	Trichloroethene	0.8		U
124-48-1	Dibromochloromethane	0.5		U
79-00-5	1,1,2-Trichloroethane	0.8		U
71-43-2	Benzene	0.8		U
10061-02-6	trans-1,3-Dichloropropene	0.8		U
75-25-2	Bromoform	0.5		U
127-18-4	Tetrachloroethene	0.8		U
79-34-5	1,1,2,2-Tetrachloroethane	0.5		U
108-88-3	Toluene	0.8		U
108-90-7	Chlorobenzene	0.5		U
100-41-4	Ethylbenzene	0.5		U
100-42-5	Styrene	0.5		U
78-87-5	1,2-Dichloropropane	0.8		U
74-87-3	Chloromethane	1		U
75-15-0	Carbon disulfide	0.5		U
67-64-1	Acetone	5	1	J
108-10-1	4-Methyl-2-pentanone	2		U
591-78-6	2-hexanone	2		U
78-93-3	2-butanone	3		U
156-60-5	trans-1,2-Dichloroethene	0.8		U
156-59-2	cis-1,2-Dichloroethene	0.5		U

1A
VOLATILE ORGANICS ANALYSIS DATA SHEET

SAMPLE NO.

VBLKLF

Project: RFA254 Date Sampled: _____

Lab Code: COMPU Case No.: 33902 SAS No.: SDG No.: 25401

Matrix: (soil/water) WATER Lab Sample ID: VBLKLF

Sample wt/vol: 25.0 (g/mL) ML Lab File ID: CB981022B54.D

Level: (low/med) LOW Date Received: _____

% Moisture: not dec. _____ Date Analyzed: 10/22/98

GC Column:SP624 ID: 0.53 (mm) Dilution Factor: 1.0

Soil Extract Volume: _____(uL) Soil Aliquot Volume: _____(uL)

CONCENTRATION UNITS: UG/L

CAS NO.	COMPOUND	DL	CONC	Q
1330-20-7	Xylene (total)	0.5		U

2A
WATER VOLATILE SYSTEM MONITORING COMPOUND RECOVERY

Lab Name: COMPUCHEM Contract: 501112

Lab Code: COMPU Case No.: 33902 SAS No.: SDG No.: 25401

	SAMPLE NO.	SMC1 (DBF) #	SMC2 (TOL) #	SMC3 (BFB) #	OTHER	TOT OUT
01	E101498-1	106	99	96		0
02	MW-18S	98	99	101		0
03	MW-19S	108	106	104		0
04	MW-7S	110	106	111		0
05	MWA-3	96	98	92		0
06	MWA-3MS	91	97	95		0
07	MWA-3MSD	97	99	99		0
08	MWA-5	95	96	98		0
09	MWA-6	96	91	83		0
10	MWA-6DL	90	101	100		0
11	MWA-6DUP	95	95	90		0
12	MWB-1	103	109	108		0
13	MWB-1DL	89	94	92		0
14	MWB-2	105	99	98		0
15	MWB-4	112	105	99		0
16	MWB-5	101	104	103		0
17	MWC-1	100	114	108		0
18	MWC-2	96	104	102		0
19	PZ-13I	95	93	86		0
20	PZ-19I	96	110	108		0
21	PZ-20D	97	104	101		0
22	PZ-21I	100	102	96		0
23	PZ-22I	109	111	107		0
24	PZ-7I	92	97	98		0
25	VBLKKM	111	105	102		0
26	VBLKKN	116	104	97		0
27	VBLKLF	100	94	83		0
28	VLCS39	89	100	101		0
29	VLCS46	98	102	103		0
30	VLCS69	96	101	106		0

			QC LIMITS
SMC1	(DBF)	= Dibromofluoromethane	(70-130)
SMC2	(TOL)	= Toluene-d8	(70-130)
SMC3	(BFB)	= Bromofluorobenzene	(70-130)

Column to be used to flag recovery values

* Values outside of contract required QC limits

D System Monitoring Compound diluted out

3A
WATER VOLATILE MATRIX SPIKE/MATRIX SPIKE DUPLICATE RECOVERY

Lab Name: COMPUCHEM Contract: 501112

Lab Code: COMPU Case No.: 33902 SAS No.: SDG No.: 25401

Matrix Spike - Sample No.: MWA-3

COMPOUND	SPIKE ADDED (ug/L)	SAMPLE CONCENTRATION (ug/L)	MS CONCENTRATION (ug/L)	MS % REC #	QC. LIMITS REC.
Bromomethane	450.0	0.000	403.2	90	20-150
Vinyl Chloride	450.0	0.000	384.8	86	20-150
Chloroethane	450.0	0.000	406.4	90	20-150
Methylene Chloride	450.0	111.9	435.5	72	20-300
1,1-Dichloroethene	450.0	189.2	586.9	88	20-150
1,1-Dichloroethane	450.0	89.06	469.5	84	20-150
Chloroform	450.0	0.000	402.7	89	20-150
1,2-Dichloroethane	450.0	0.000	418.1	93	20-150
1,1,1-Trichloroethane	450.0	1652	1915	58	20-150
Carbon Tetrachloride	450.0	0.000	427.5	95	20-150
Bromodichloromethane	450.0	0.000	422.0	94	20-150
cis-1,3-Dichloropropene	450.0	0.000	399.2	89	20-150
Trichloroethene	450.0	181.0	625.5	99	20-150
Dibromochloromethane	450.0	0.000	423.7	94	20-150
1,1,2-Trichloroethane	450.0	0.000	429.2	95	20-150
Benzene	450.0	0.000	417.7	93	20-150
trans-1,3-Dichloroprope	450.0	0.000	417.0	93	20-150
Bromoform	450.0	0.000	410.2	91	20-150
Tetrachloroethene	450.0	608.3	1020	91	20-150
1,1,2,2-Tetrachloroetha	450.0	0.000	431.6	96	20-150
Toluene	450.0	0.000	430.9	96	20-150
Chlorobenzene	450.0	0.000	454.9	101	20-150
Ethylbenzene	450.0	0.000	440.9	98	20-150
Styrene	450.0	0.000	420.3	93	20-150
1,2-Dichloropropane	450.0	0.000	428.7	95	20-150
Chloromethane	450.0	0.000	409.4	91	20-150
Carbon disulfide	450.0	0.000	431.4	96	20-150
Acetone	2250	147.2	2543	106	20-300
4-Methyl-2-pentanone	2250	0.000	2358	105	20-300
2-hexanone	2250	0.000	2363	105	20-300

3A

WATER VOLATILE MATRIX SPIKE/MATRIX SPIKE DUPLICATE RECOVERY

Lab Name: COMPUCHEM Contract: 501112

Lab Code: COMPU Case No.: 33902 SAS No.: SDG No.: 25401

Matrix Spike - Sample No.: MWA-3

COMPOUND	SPIKE ADDED (ug/L)	SAMPLE CONCENTRATION (ug/L)	MS CONCENTRATION (ug/L)	MS % REC #	QC. LIMITS REC.
2-butanone	2250	0.000	2273	101	20-300
trans-1,2-Dichloroethen	450.0	0.000	418.8	93	20-150
cis-1,2-Dichloroethene	450.0	174.0	569.4	88	20-150
Xylene (total)	1350	0.000	1460	108	20-150

3A
WATER VOLATILE MATRIX SPIKE/MATRIX SPIKE DUPLICATE RECOVERY

Lab Name: COMPUCHEM Contract: 501112

Lab Code: COMPU Case No.: 33902 SAS No.: SDG No.: 25401

Matrix Spike - Sample No.: MWA-3

COMPOUND	SPIKE ADDED (ug/L)	MSD CONCENTRATION (ug/L)	MSD % REC #	% RPD #	QC LIMITS RPD	QC LIMITS REC.
Bromomethane	450.0	417.4	93	3	25	20-150
Vinyl Chloride	450.0	420.8	94	9	25	20-150
Chloroethane	450.0	421.3	94	4	25	20-150
Methylene Chloride	450.0	475.0	81	12	25	20-300
1,1-Dichloroethene	450.0	593.1	90	2	25	20-150
1,1-Dichloroethane	450.0	503.1	92	9	25	20-150
Chloroform	450.0	414.1	92	3	25	20-150
1,2-Dichloroethane	450.0	453.9	101	8	25	20-150
1,1,1-Trichloroethane	450.0	1992	76	27*	25	20-150
Carbon Tetrachloride	450.0	441.4	98	3	25	20-150
Bromodichloromethane	450.0	444.0	99	5	25	20-150
cis-1,3-Dichloropropene	450.0	427.6	95	6	25	20-150
Trichloroethene	450.0	634.7	101	2	25	20-150
Dibromochloromethane	450.0	445.4	99	5	25	20-150
1,1,2-Trichloroethane	450.0	460.8	102	7	25	20-150
Benzene	450.0	436.5	97	4	25	20-150
trans-1,3-Dichloroprope	450.0	499.9	111	18	25	20-150
Bromoform	450.0	452.8	101	10	25	20-150
Tetrachloroethene	450.0	997.0	86	6	25	20-150
1,1,2,2-Tetrachloroetha	450.0	462.8	103	7	25	20-150
Toluene	450.0	444.0	99	3	25	20-150
Chlorobenzene	450.0	469.4	104	3	25	20-150
Ethylbenzene	450.0	435.4	97	1	25	20-150
Styrene	450.0	429.1	95	2	25	20-150
1,2-Dichloropropane	450.0	438.2	97	2	25	20-150
Chloromethane	450.0	420.3	93	2	25	20-150
Carbon disulfide	450.0	417.3	93	3	25	20-150
Acetone	2250	2827	119	12	25	20-300
4-Methyl-2-pentanone	2250	3003	133	24	25	20-300
2-hexanone	2250	2950	131	22	25	20-300

3A
WATER VOLATILE MATRIX SPIKE/MATRIX SPIKE DUPLICATE RECOVERY

Lab Name: COMPUCHEM Contract: 501112

Lab Code: COMPU Case No.: 33902 SAS No.: SDG No.: 25401

Matrix Spike - Sample No.: MWA-3

COMPOUND	SPIKE ADDED (ug/L)	MSD CONCENTRATION (ug/L)	MSD % REC #	% RPD #	QC LIMITS RPD	QC LIMITS REC.
2-butanone	2250	2698	120	17	25	20-300
trans-1,2-Dichloroethen	450.0	417.0	93	0	25	20-150
cis-1,2-Dichloroethene	450.0	589.0	92	4	25	20-150
Xylene (total)	1350	1416	105	3	25	20-150

Column to be used to flag recovery and RPD values with an asterisk

* Values outside of QC limits

RPD: 1 out of 34 outside limits
Spike Recovery: 0 out of 68 outside limits

COMMENTS: _____

3A

WATER VOLATILE LAB CONTROL SAMPLE RECOVERY

CLIENT SAMPLE NO.

VLCS39

Lab Name: COMPUCHEM Contract: 501112

Lab Code: COMPU Case No.: 33902 SAS No.: SDG No.: 25401

Lab Sample ID: 915825 LCS Lot No.: SE115

Lab File ID: CN015825B54.D Date Analyzed: 10/22/98

Purge Volume: 25.0 (mL) Dilution Factor: 1.0

COMPOUND	AMOUNT ADDED (ug/L)	AMOUNT RECOVERED (ug/L)	%REC #	QC LIMITS
1,1,1-Trichloroethane	5.00	4.58	92	20-150
1,1,2-Trichloroethane	5.00	5.00	100	20-150
1,2-Dichloroethane	5.00	5.32	106	20-150
Benzene	5.00	4.56	91	20-150
Bromodichloromethane	5.00	5.42	108	20-150
Bromoform	5.00	5.15	103	20-150
Bromomethane	5.00	4.36	87	20-150
Carbon Tetrachloride	5.00	4.58	92	20-150
Carbon disulfide	5.00	4.71	94	20-150
Chloroethane	5.00	4.35	87	20-150
Dibromochloromethane	5.00	5.29	106	20-150
Styrene	5.00	4.86	97	20-150
Tetrachloroethene	5.00	4.80	96	20-150
Trichloroethene	5.00	5.29	106	20-150
cis-1,2-Dichloroethene	5.00	4.55	91	20-150
cis-1,3-Dichloropropene	5.00	5.24	105	20-150
trans-1,2-Dichloroethene	5.00	4.48	90	20-150
trans-1,3-Dichloropropene	5.00	4.04	81	20-150
Xylene (total)	15.00	16.01	107	20-150
Methylene Chloride	5.00	5.34	107	20-300
2-butanone	25.00	22.89	92	20-300
2-hexanone	25.00	23.35	93	20-300
4-Methyl-2-pentanone	25.00	24.40	98	20-300
Acetone	25.00	23.69	95	20-300
1,1,2,2-Tetrachloroethane	5.00	5.06	101	20-150
1,1-Dichloroethane	5.00	4.51	90	20-150
1,1-Dichloroethene	5.00	4.50	90	20-150
1,2-Dichloropropane	5.00	5.13	102	20-150
Chlorobenzene	5.00	5.11	102	20-150
Chloroform	5.00	4.59	92	20-150

Column to be used to flag LCS recovery with an asterisk.
* Values outside of QC limits.

3A

WATER VOLATILE LAB CONTROL SAMPLE RECOVERY

CLIENT SAMPLE NO.

VLCS39

Lab Name: COMPUCHEM Contract: 501112

Lab Code: COMPU Case No.: 33902 SAS No.: SDG No.: 25401

Lab Sample ID: 915825 LCS Lot No.: SE115

Lab File ID: CN015825B54.D Date Analyzed: 10/22/98

Purge Volume: 25.0 (mL) Dilution Factor: 1.0

COMPOUND	AMOUNT ADDED (ug/L)	AMOUNT RECOVERED (ug/L)	%REC #	QC LIMITS
Chloromethane	5.00	4.54	91	20-150
Ethylbenzene	5.00	4.88	98	20-150
Toluene	5.00	5.18	104	20-150
Vinyl Chloride	5.00	4.51	90	20-150

Column to be used to flag LCS recovery with an asterisk.
* Values outside of QC limits.

LCS Recovery: 0 outside limits out of 34 total.

COMMENTS:

3A

WATER VOLATILE LAB CONTROL SAMPLE RECOVERY

CLIENT SAMPLE NO.

VLCS46

Lab Name: COMPUCHEM Contract: 501112

Lab Code: COMPU Case No.: 33902 SAS No.: SDG No.: 25401

Lab Sample ID: 914269 LCS Lot No.: SE115

Lab File ID: CN014269A54.D Date Analyzed: 10/20/98

Purge Volume: 25.0 (mL) Dilution Factor: 1.0

COMPOUND	AMOUNT ADDED (ug/L)	AMOUNT RECOVERED (ug/L)	%REC #	QC LIMITS
1,1,1-Trichloroethane	5.00	5.07	101	20-150
1,1,2-Trichloroethane	5.00	4.89	98	20-150
1,2-Dichloroethane	5.00	5.10	102	20-150
Benzene	5.00	5.17	103	20-150
Bromodichloromethane	5.00	5.11	102	20-150
Bromoform	5.00	4.82	96	20-150
Bromomethane	5.00	5.29	106	20-150
Carbon Tetrachloride	5.00	5.01	100	20-150
Carbon disulfide	5.00	5.14	103	20-150
Chloroethane	5.00	5.10	102	20-150
Dibromochloromethane	5.00	4.91	98	20-150
Styrene	5.00	5.36	107	20-150
Tetrachloroethene	5.00	4.91	98	20-150
Trichloroethene	5.00	5.19	104	20-150
cis-1,2-Dichloroethene	5.00	4.93	99	20-150
cis-1,3-Dichloropropene	5.00	5.25	105	20-150
trans-1,2-Dichloroethene	5.00	4.75	95	20-150
trans-1,3-Dichloropropene	5.00	4.41	88	20-150
Xylene (total)	15.00	16.78	112	20-150
Methylene Chloride	5.00	4.89	98	20-300
2-butanone	25.00	26.22	105	20-300
2-hexanone	25.00	25.35	101	20-300
4-Methyl-2-pentanone	25.00	25.70	103	20-300
Acetone	25.00	23.82	95	20-300
1,1,2,2-Tetrachloroethane	5.00	5.17	103	20-150
1,1-Dichloroethane	5.00	4.94	99	20-150
1,1-Dichloroethene	5.00	4.98	100	20-150
1,2-Dichloropropane	5.00	5.21	104	20-150
Chlorobenzene	5.00	5.15	103	20-150
Chloroform	5.00	5.12	102	20-150

Column to be used to flag LCS recovery with an asterisk.
* Values outside of QC limits.

3A

WATER VOLATILE LAB CONTROL SAMPLE RECOVERY

CLIENT SAMPLE NO.

VLCS46

Lab Name: COMPUCHEM Contract: 501112

Lab Code: COMPU Case No.: 33902 SAS No.: SDG No.: 25401

Lab Sample ID: 914269 LCS Lot No.: SE115

Lab File ID: CN014269A54.D Date Analyzed: 10/20/98

Purge Volume: 25.0 (mL) Dilution Factor: 1.0

COMPOUND	AMOUNT ADDED (ug/L)	AMOUNT RECOVERED (ug/L)	%REC #	QC LIMITS
Chloromethane	5.00	4.78	96	20-150
Ethylbenzene	5.00	5.21	104	20-150
Toluene	5.00	5.29	106	20-150
Vinyl Chloride	5.00	4.59	92	20-150

Column to be used to flag LCS recovery with an asterisk.
* Values outside of QC limits.

LCS Recovery: 0 outside limits out of 34 total.

COMMENTS:

3A

WATER VOLATILE LAB CONTROL SAMPLE RECOVERY

CLIENT SAMPLE NO.

VLCS69

Lab Name: COMPUCHEM Contract: 501112

Lab Code: COMPU Case No.: 33902 SAS No.: SDG No.: 25401

Lab Sample ID: 915022 LCS Lot No.: SE115

Lab File ID: CN015022A54.D Date Analyzed: 10/21/98

Purge Volume: 25.0 (mL) Dilution Factor: 1.0

COMPOUND	AMOUNT ADDED (ug/L)	AMOUNT RECOVERED (ug/L)	%REC #	QC LIMITS
1,1,1-Trichloroethane	5.00	4.88	98	20-150
1,1,2-Trichloroethane	5.00	5.18	104	20-150
1,2-Dichloroethane	5.00	5.18	104	20-150
Benzene	5.00	4.86	97	20-150
Bromodichloromethane	5.00	5.13	102	20-150
Bromoform	5.00	5.20	104	20-150
Bromomethane	5.00	4.46	89	20-150
Carbon Tetrachloride	5.00	4.98	100	20-150
Carbon disulfide	5.00	4.47	89	20-150
Chloroethane	5.00	4.11	82	20-150
Dibromochloromethane	5.00	5.48	110	20-150
Styrene	5.00	5.32	106	20-150
Tetrachloroethene	5.00	5.19	104	20-150
Trichloroethene	5.00	5.22	104	20-150
cis-1,2-Dichloroethene	5.00	4.95	99	20-150
cis-1,3-Dichloropropene	5.00	5.04	101	20-150
trans-1,2-Dichloroethene	5.00	4.88	98	20-150
trans-1,3-Dichloropropene	5.00	3.62	72	20-150
Xylene (total)	15.00	16.46	110	20-150
Methylene Chloride	5.00	4.43	89	20-300
2-butanone	25.00	21.95	88	20-300
2-hexanone	25.00	22.14	88	20-300
4-Methyl-2-pentanone	25.00	23.87	95	20-300
Acetone	25.00	18.35	73	20-300
1,1,2,2-Tetrachloroethane	5.00	5.01	100	20-150
1,1-Dichloroethane	5.00	4.91	98	20-150
1,1-Dichloroethene	5.00	4.41	88	20-150
1,2-Dichloropropane	5.00	5.15	103	20-150
Chlorobenzene	5.00	5.26	105	20-150
Chloroform	5.00	4.99	100	20-150

Column to be used to flag LCS recovery with an asterisk.
* Values outside of QC limits.

3A

WATER VOLATILE LAB CONTROL SAMPLE RECOVERY

CLIENT SAMPLE NO.

VLCS69

Lab Name: COMPUCHEM Contract: 501112

Lab Code: COMPU Case No.: 33902 SAS No.: SDG No.: 25401

Lab Sample ID: 915022 LCS Lot No.: SE115

Lab File ID: CN015022A54.D Date Analyzed: 10/21/98

Purge Volume: 25.0 (mL) Dilution Factor: 1.0

COMPOUND	AMOUNT ADDED (ug/L)	AMOUNT RECOVERED (ug/L)	%REC #	QC LIMITS
Chloromethane	5.00	3.63	73	20-150
Ethylbenzene	5.00	5.08	102	20-150
Toluene	5.00	5.34	107	20-150
Vinyl Chloride	5.00	3.78	76	20-150

Column to be used to flag LCS recovery with an asterisk.
* Values outside of QC limits.

LCS Recovery: 0 outside limits out of 34 total.

COMMENTS:

COMPUCHEM

a division of Liberty Analytical Corp.

ENTERED IN DATABASE
BY/DATE DVS 10/29/98
CHECKED BY DVS/DJS
DATE 11/3/98

OCT 28 1998

27/OCT/98

LEGGETTE BRASHEARS & GRAHAM
ATTN: MR. KEN VOGEL
1210 WEST COUNTY Rd. E, STE700
ST. PAUL, MN 55112

Subject: Report of Data - Account Number# 501112 Order# 33902

ATTN: MR. KEN VOGEL

Enclosed are the results of analytical work performed in accordance with the referenced account number.

This report covers 20 sample(s) appearing on the attached listing.

Thank you for selecting CompuChem Environmental for your sample analysis. If you should have questions or require additional analytical services please contact your representative at 1-800-833-5097.

Sincerely,

Diane Ellmore

CompuChem Environmental
a division of Liberty Analytical

Attachment

501 Madison Avenue ■ Cary N.C. 27513 ■ Tel 919-379-4100 ■ Fax 919-379-4050

COMPUCHEM
a division of Liberty Analytical Corp.

27/OCT/98

LEGGETTE BRASHEARS & GRAHAM
ATTN: MR. KEN VOGEL
1210 WEST COUNTY Rd. E, STE700
ST. PAUL, MN 55112

ACCOUNT #: 501112

CC#	SAMPLE-ID	RECEIPT DATE
914747	TBLK101498	10/17/98
914750	PZ-12I	10/17/98
914751	PZ-12D	10/17/98
914752	MW-15S	10/17/98
914753	E101498-2	10/17/98
914754	MW-11S	10/17/98
914755	MW-11SDUP	10/17/98
914756	MWB-3	10/17/98
914757	MWC-3	10/17/98
914759	PZ-14I	10/17/98
914760	MWA-2	10/17/98
914761	PZ-16D	10/17/98
914762	MWB-6	10/17/98
914763	MW-8S	10/17/98
914764	E101598-3	10/17/98
914765	PZ-8I	10/17/98
914766	PZ-8D	10/17/98
914767	PZ-9D	10/17/98
914768	MW-10S	10/17/98
914769	PZ-10I	10/17/98

TOTAL NUMBER OF SAMPLES = 20

501 Madison Avenue ■ Cary, N.C. 27513 ■ Tel 919-379-4100 ■ Fax 919-379-4050

CompuChem
a Division of Liberty Analytical
501 N. Madison Avenue
Cary, NC 27513

SDG NARRATIVE
CASE:33902
SDG:25402
CONTRACT:501112

SAMPLE IDENTIFICATIONS: TBLK101498 PZ-12I PZ-12D PZ-14I PZ-16D PZ-8I PZ-8D PZ-9D PZ-10I MW-15S MW-11S MW-11SDUP MWB-3 MWC-3 MWA-2 MWB-6 MW-8S MW-10S E101498-2 E101598-3

The twenty(20) water samples listed above were received intact, properly refrigerated,with proper chain of custody(COC) documentation on October 17,1998. The samples were prepared and analyzed following SW846 method 8260 25ml purge. All of these samples were submitted for volatile only analysis.

VOLATILES:

Analysis holding time requirements were met for these samples. The majority of samples contained one or more of the target analytes 1,1,1-trichloroethane, trichloroethene, tetrachloroethene, acetone, 1,1-dichlorethene, 1,1-dichloroethane and cis-1,2-dichloroethene. Sixteen out of the twenty submitted samples were diluted due to one or more of these target analytes.

Samples PZ-12I, PZ-8I, PZ-8D, PZ-9D, and MWA-2 were all analyzed at dilutions, and further dilutions were necessary to bring all analytes into calibration range. We have reported two analyses for these samples so that the most TCL data would be provided.

Sample PZ-16D was originally analyzed at a 83:1 dilution based on screen data, however 1,1,1-trichloroethane was not in the upper half of the calibration range. The sample was reanalyzed at a lesser dilution of 25:1 from a second bottle, however this analyte response did not respond linearly as expected. We conclude that the results are due to sample inhomogeneity, and we have reported both analyses. Sample PZ-14I was initially analyzed neat and trichloroethene exceeded the calibration range. A reanalysis at a 8.3:1 dilution brought this analyte into range. We are reporting both analyses so that no TCL data would be lost due to dilution.

No Tentatively Identified Compound (TIC) data is provided as requested by the client.

All of the surrogates met recovery criteria with the exception that one or more surrogates failed high for recovery in samples PZ-12I and PZ-8D. The reanalyis, however met all surrogate recoveries and we have reported both analyses.
All of the internal standards met response and retention time criteria in the analyses of these samples.

The associated method blanks met all quality control criteria and all contained methylene-chloride below the reporting limit.

The associated Laboratory Control Samples(LCS's) met all QC acceptance limits.

The duplicate matrix spikes generated from MWA-2 met all QC precision and accuracy criteria with exceptions. Three out of thirty four advisory RPD limits were exceeded.

I certify that this data package is in compliance with the terms and conditions of the contract, both technically and for completeness, for other than the conditions listed above. Release of the data contained in this hardcopy data

package and in the computer-readable data submitted on floppy diskette has been authorized by the Laboratory Manager or his designee, as verified by the following signature.

Roy Sutton

Roy M. Sutton
Development Chemist
October 27, 1998

GC and GC/MS Column and Trap Specifications Table

COLUMNS

Brand Name	Coating Material	ID (mm)	Film Thickness (um)	Length (m)
GC Laboratory				
Restek	RTX-1701	0.53	0.5	30
J & W	DB-608	0.53	0.83	30
Restek	CLPesticides	0.53	0.5	30
Restek	CLPesticides II	0.53	0.42	30
GC/MS Volatiles Laboratory				
J & W	DB-624	0.53	3.0	30/75
Supelco	SPB-624	0.53	3.0	75
GC/MS Semivolatiles Laboratory				
J & W	DB-5	0.32	1.0	30
Hewlett Packard	HP5-MS	0.25	0.25	30

TRAP

GC/MS Volatiles Laboratory	
	* 15 cm of 2,6-diphenylene oxide polymer (Tenax) * 1 cm of methyl silicone packing (OV-1 coating) * 8 cm of silica gel * 0.5 cm of glass wool at each end

CompuChem
a division of Liberty Analytical Corporation

Notification Regarding Manual Editing/Integration Flags

In some instances, manual adjustments to the software output are necessary to provide accurate data. These adjustments are performed by the data reviewer, GC/MS operator, or GC chemist. An Extracted Ion Current Profile (EICP) or a GC chromatographic peak has been provided for the manual integration of each compound to demonstrate the accuracy of that process. Adjustments are flagged on the quantitation report in the far right column beyond the FINAL concentration for GC/MS analysis, and in the "Flags" column for GC analysis. The manual editing/integration flags are:

M - Denotes that a manual integration has been performed for this compound. The manual integration was performed in order to provide the most accurate area count as possible for the peak.

H - Denotes that the data reviewer, GC/MS operator, or GC Chemist has chosen an alternate peak within the retention time window from that chosen by the software for that compound. No manual integration is performed in choosing an alternate peak. The software still performs the integration.

MH - Denotes that an alternate peak has been chosen within the retention time window from that chosen by the software for that compound and also a manual integration of the chosen peak has been performed. The manual integration was performed in order to provide the most accurate area count possible for the peak.

L - Denotes that the data reviewer or GC/MS operator has selected an alternate library search. This is typically done when an additional tentatively identified compound (TIC) has been added to the number of peaks searched. No manual integration is performed in choosing an alternate peak. The software still performs the integration.

ML - Denotes that an alternate library search has been selected and a manual integration has also been performed. This is typically done when an additional TIC has been added and the TIC peak also required a manual integration.

With the introduction of the current EPA CLP SOW (Document Number OLM03.0, plus revisions) additional explanations for manual editing/integration are required. In the accompanying raw data packages, additional codes have been applied to the "M" flag and carry the following meanings;

M1 - The compound was not found by the automatic integration routine.

M2 - The compound was incorrectly integrated by the automatic integration routine.

M3 - The co-eluting compounds were incorrectly integrated by the automatic integration routine.

These codes will appear in the GC/MS and GC data packages.

Robert E. Meierer
Vice President

Revision 4 (10/8/97)

DATA REPORTING QUALIFIERS

On the Form I, under the column labeled "Q" for qualifier, each result is flagged with the specific data reporting qualifiers listed below, as appropriate. Up to five qualifiers may be reported on Form I for each compound. The qualifiers used are:

U : This flag indicates the compound was analyzed for but not detected. The Contract Required Quantitation Limit (CRQL) (or Reporting Limit) will be adjusted to reflect any dilution and, for soils, the percent moisture.

J : This flag indicates an estimated value. The flag is used as detailed below:

1. When estimating a concentration for tentatively identified compounds (TICs) where a response factor of 1.0 is assumed for the TIC analyte,

2. When the mass spectral and retention time data indicate the presence of a compound that meets the volatile and semivolatile GC/MS identification criteria, and the result is less than the CRQL (or Reporting Limit) but greater than zero, and

3. When the retention time data indicates the presence of a compound that meets the pesticide/Aroclor or other GC or HPLC identification criteria, and the result is less than the CRQL (or Reporting Limit) but greater than zero. For example, if the CRQL (or Reporting Limit) is 10 µg/L, but a concentration of 3 µg/L is calculated, it is reported as 3J.

N : This flag indicates presumptive evidence of a compound. This flag is only used for TICs, where the identification is based on a mass spectral library search. For generic characterization of a TIC such as 'chlorinated hydrocarbon', the N flag is not used.

P : In the EPA's Contract Laboratory Program (CLP), this flag is used for a pesticide/Aroclor target analyte, when there is greater than 25% difference for detected concentrations between the two GC columns. The lower of the two values is reported on Form I and flagged with a P.
For SW-846 GC and HPLC analyses, when the Relative Percent Difference (RPD) is greater than 40% and there is no evidence of chromatographic anomalies or interferences, then the higher of the two values is reported and flagged with a P. When the RPD is equal to or less than 40%, our policy is to also report the higher of the two values, although the choice could be a project specific issue.

C : This flag applies to GC or HPLC results where the identification has been confirmed by GC/MS. If GC/MS confirmation was attempted but was unsuccessful, this flag is not applied; a laboratory-defined flag is used instead (see the X/Y/Z qualifier.)

DATA REPORTING QUALIFIERS (continued)

B : This flag is used when the analyte is found in the associated blank as well as in the sample. It indicates probable blank contamination and warns the data user to take appropriate action. This flag is used for a TIC as well as for a positively identified target compound. The combination of flags BU or UB is not an allowable policy. Blank contaminants are flagged B only when they are detected in the sample.

E : This flag identifies compounds whose concentrations exceed the upper level of the calibration range of the instrument for that specific analysis. If one or more compounds have a response greater than the upper level of the calibration range, the sample or extract will be diluted and reanalyzed. All such compounds with a response greater than the upper level of the calibration range will have the concentration flagged with an E on Form I for the original analysis.

D : If a sample or extract is reanalyzed at a higher dilution factor, for example when the concentration of an analyte exceeds the upper calibration range, the DL suffix is appended to the sample number on Form I for the more diluted sample, and **all** reported concentrations on that Form I are flagged with the D flag. This flag alerts data users that any discrepancies between the reported concentrations may be due to dilution of the sample or extract.

NOTE 1: The D flag is not applied to compounds which are not detected in the sample analysis i.e. compounds reported with the CRQL (or Reporting Limit) and the U flag.

NOTE 2: Separate Form Is are used for reporting the original analysis (Client Sample No. XXXXX) and the more diluted sample analysis (Client Sample No. XXXXXDL) i.e. the results from both analyses <u>are not combined</u> on a single Form I.

A : This flag indicates that a TIC is a suspected aldol-condensation product.

S : This flag indicates that an analyte was detected by a single column GC analysis but the result was below the Reporting Limit. This flag is only used when clients request a second (confirmation) column analysis after detecting an analyte above the Reporting Limit in the initial, single column analysis. This flag alerts the data user that only an analyte was detected below the Reporting Limit and a second (confirmation) analysis was not performed.

X/Y/Z : Other specific flags may be required to properly define the results. If used, the flags will be fully described in the SDG Narrative. The laboratory-defined flags are limited to X, Y and Z.

CHRYSLER CORPORATION

Chain-of-Custody

03732 A

4th Quarter GW Sampling

CompuChem
501 Madison Avenue
Cary, NC 27513
Phone Number: 1-800-833-5097
Fax Number: (919) 379-4050

Project Name: DAYTON THERMAL PROD
Site Location: Dayton, OH
Site Code: SC001
RFA Number: YGQP9800254-T
Chrysler PM: Gary Stanczuk

Consultant: Legacy Brothers Graham, Inc.
Address: 1213 W. Co Rd. E
St Paul, Mn. 55112
Consultant PM: Ken Vogel
Phone: 651-490-1405 Fax: 651-490-1006

Turn-around Time Request:
24 calendar hrs.
48 calendar hrs.
10 days
28 days

Data Package Deliverables: (circle)
Chrysler Level 1
Chrysler Level 2
Other (specify):

Compound List-Parameter/Method/Bottle Type/Preservative

Matrix Codes
S - Soil
SW - Surface Water
GW - Groundwater
A - Air
Sed. - Sediment
O - Other (specify)

Field Sample Identification	Date Collected	Time Collected	Grab (G) or Composite (C)	Matrix Code	Total # of Containers	8260	Lab Use Only: Volatiles pH <2	Metals pH <2	Cyanide pH > 12	Other	Remarks
E101498-1	10/14/98	8:30	G	GW	3	X					Equipment Blank
MW6-1		8:40			3	X					
MW8-1		8:50			3	X					
PZ-22I		9:05			3	X					
MW8-4		9:40			3	X					
PZ-21I		9:50			3	X					
MW-19S		10:10			3	X					
PZ-19I		10:20			3	X					
PZ-20D		10:50			3	X					
MW-18S		11:04			3	X					

Sampler(s): Daniel Pursell

Bottles Relinquished under Airbill No. 4287 4957 7498

Samples Relinquished under Airbill No. 2024953473

Temperature (corrected) 4.2 open t 10:40am 10/17/98 DE

Relinquished by:	Date:	Time:	Received by:	Date:	Time:	Custody Seal Intact?
Daniel Pursell	10/15/98		Natalie Scott	10-16-98	1213	Yes No
						Yes No
			Received for Laboratory by: Jane Ellmore	10/17/98	10:40am	Yes No

Cooler ID # 402

Is RFA sampling complete? Yes No

Chrysler Corporation 800 Chrysler Drive, CIMS 482-00-51, Auburn Hills, Michigan 48326-2757

Distribution: White copy: Data package Yellow : Retained by laboratory Pink: Retained by sampler

Samples placed in storage ID 4 DE 10/17/98 11:30am

C/C Sealed
Samples intact
Coolers [illegible]

Revision No. 1
Created September 23, 1997

CHRYSLER CORPORATION

Chain-of-Custody

03733 A

4th Quarter GW Sampling

CompuChem
501 Madison Avenue
Cary, NC 27513
Phone Number: 1-800-833-5097
Fax Number: (919) 379-4050

Project Name: Dayton Thermal Products
Site Location: Dayton, OH.
Site Code: SC001
RFA Number: YGQP9800254-T
Chrysler PM: Gary Stanczuk

Consultant: LaBella, Bresheers & Graham, Inc.
Address: 1270 W. Co. Rd E
St. Paul, MN 55112
Consultant PM: Ken Vogel
Phone: 651-490-1405 Fax: 651-490-1006

Turn-around Time Request:
24 calendar hrs.
48 calendar hrs.
10 days
28 days

Data Package Deliverables: (circle)
Chrysler Level 1
Chrysler Level 2
Other (specify):

Matrix Codes
S - Soil
GW - Groundwater
Sed. - Sediment
O - Other (specify)
SW - Surface Water
A - Air

Field Sample Identification	Date Collected	Time Collected	Grab (G) or Composite (C)	Matrix Code	Total # of Containers	8260	Lab Use Only: Volatiles pH <2	Metals pH < 2	Cyanide pH > 12	Other ____	Remarks
MW B-2	10/14/98	11:30	G	GW	3	X					
MW C-2		11:45			3	X					
MW-75		13:00			3	X					
PZ-7I		13:10			3	X					
MW B-5		13:20			3	X					
MW A-5		13:30			3	X					
MW A-6		13:55			3	X					
PZ-13I		13:40			3	X					
MW A-6 Dup		13:56			3	X					
Trip Blank 10/14/98					2	X					

Sampler(s): Ronald Prescott

Cooler ID # 402

Is RFA sampling complete? Yes No

Bottles Relinquished under Airbill No. 4287 4957 7498

Samples Relinquished under Airbill No. 802495 3473

Temperature (corrected) 4.0 C

Relinquished by:	Date:	Time:	Received by:	Date:	Time:	Custody Seal Intact?
Ronald Prescott	10/15/98		Natalie Scott	10-16-98	1213	Yes No
						Yes No
			Received for Laboratory by: Diane Ellmore	10/17/98	10:40am	Yes No

Chrysler Corporation 800 Chrysler Drive, CIMS 482-00-51, Auburn Hills, Michigan 48326-2757

Distribution: White copy: Data package Yellow : Retained by laboratory Pink: Retained by sampler

Samples placed in storage
ID 4 DE 10/17/98 11:30am

C/C Sealed
Samples intact
Cooler temp 1°

Revision No. 1
Created: September 23, 1997

CHRYSLER CORPORATION

Chain-of-Custody

03734 A

4th Qtr GW Sampling

CompuChem
501 Madison Avenue
Cary, NC 27513
Phone Number: 1-800-833-5097
Fax Number: (919) 379-4050

Project Name: Dayton Thermal Products
Site Location: Dayton, OH
Site Code: SC001
RFA Number: YGQP9800254-T
Chrysler PM: Gary Stanczuk

Consultant: Leggette, Brashears & Graham, Inc
Address: 1270 W. Co. Rd. E
St Paul, MN 55112
Consultant PM: Ken Vogel
Phone: 651-490-1405 Fax: 651-490-1405

Turn-around Time Request:
24 calendar hrs.
48 calendar hrs.
10 days
28 days

Data Package Deliverables: (circle)
Chrysler Level 1
Chrysler Level 2
Other (specify):

Compound List-Parameter/Method/Bottle Type/Preservative

Matrix Codes
S - Soil
GW - Groundwater
Sed. - Sediment
O - Other (specify)
SW - Surface Water
A - Air

Field Sample Identification	Date Collected	Time Collected	Grab (G) or Composite (C)	Matrix Code	Total # of Containers	8260	Volatiles pH <2	Metals pH < 2	Cyanide pH > 12	Other	Remarks
PZ-12I	10/14/98	14:00	G	GW	3	X					
PZ-12D		14:10			3	X					
MW-15S		14:50			2	X					
E101498-2		15:00			2	X					Equipment Blank
MW-15I ☆		15:01			2	X					On bottle PZ-15I time 15:01
MW-11S		15:15			2	X					
MW-11S Dup		15:16			2	X					
MWB-3		15:30			2	X					
MWC-3		15:40			2	X					
MWA-3		16:00			2	X					

Should read PZ-15I DE 10/14/98 per Dave Strand

Sampler(s) Daniel Prescott

Bottles Relinquished under Airbill No. 4287 4951 7498

Samples Relinquished under Airbill No. 802495346 2

Temperature (corrected) 9.0 C DE 10:10am 10/17/98

Relinquished by:	Date:	Time:	Received by:	Date:	Time:	Custody Seal Intact?
Daniel Prescott	10/15/98		Natalie Booth	10-16-98	1213	Yes No
						Yes No
			Received for Laboratory by: Dave Ellmore	10/17/98	10:40am	Yes No

Cooler ID # 7

Is RFA sampling complete? Yes No

Chrysler Corporation 800 Chrysler Drive, CIMS 482-00-51, Auburn Hills, Michigan 48326-2757

Distribution: White copy: Data package Yellow : Retained by laboratory Pink: Retained by sampler

Samples placed in Storage ID 4
DE 10/17/98
11:30am

C/C Sealed
Samples Intact
Cooler temp 6° NS

Revision No. 1
Created September 23, 1997

CHRYSLER CORPORATION

Chain-of-Custody

03735 A

4th Qtr. GW. Sampling

CompuChem
501 Madison Avenue
Cary, NC 27513
Phone Number: 1-800-833-5097
Fax Number: (919) 379-4050

Project Name: Dayton Thermal Products
Site Location: Dayton, OH
Site Code: SC001
RFA Number: YGOF9800254-T
Chrysler PM: Gary Sanzuk

Consultant: Legette, Brashears & Graham, Inc.
Address: 1210 W. Co Rd. E
St Paul, MN. 55112
Consultant PM: Ken Vogel
Phone: 651-490-1905 Fax: 651-490-1006

Turn-around Time Request:
24 calendar hrs.
48 calendar hrs.
10 days
28 days

Data Package Deliverables: (circle)
Chrysler Level 1
Chrysler Level 2
Other (specify):

Compound List-Parameter/Method/Bottle Type/Preservative

Matrix Codes
S - Soil
GW - Groundwater
Sed. - Sediment
O - Other (specify)
SW - Surface Water
A - Air

Lab Use Only

Field Sample Identification	Date Collected	Time Collected	Grab (G) or Composite (C)	Matrix Code	Total # of Containers	8260	Volatiles pH <2	Metals pH < 2	Cyanide pH > 12	Other	Remarks
MWA-3 MS/MSD	10/14/98	16:01	G	GW	2	X					
PZ-14I	10/14/98	16:10			2	X					
MWA-2		16:25			2	X					
MWA-2 MS/MSD		16:26			2	X					
PZ-16D		16:30			2	X					
MWB-6	10/15/98	7:55			2	X					
MW-5S		8:15			2	X					
E101598-3		8:17			2	X					Equipment blank
PZ-8I		8:20			2	X					
PZ-8D		8:25			2	X					

Sampler(s): Donald Prasell

Bottles Relinquished under Airbill No. 4287 4957 7498

Samples Relinquished under Airbill No. 802495346 2

Temperature (corrected) 4.0 C 10/17/98 10:40am

Relinquished by:	Date:	Time:	Received by:	Date:	Time:	Custody Seal Intact?
Donald Prasell	10/15/98		Walter Booth			Yes No
						Yes No
			Received for Laboratory by: Diane Ellmore	10/17/98	10:40am	Yes No

Cooler ID # 7

Is RFA sampling complete? Yes No

Chrysler Corporation 800 Chrysler Drive, CIMS 482-00-51, Auburn Hills, Michigan 48326-2757

Distribution: White copy: Data package Yellow : Retained by laboratory Pink: Retained by sampler

C/C Sealed Samples intact
Cooler temp 6°

Samples placed in storage 1D
4 DE 10/17/98
11:30am

Revision No. 1
Created September 23, 1997

CHRYSLER CORPORATION

Chain-of-Custody

03736 A

4th Qtr. GW. Sampling

CompuChem
501 Madison Avenue
Cary, NC 27513
Phone Number: 1-800-833-5097
Fax Number: (919) 379-4050

Project Name: Dayton Thermal Products
Site Location: Dayton, OH
Site Code: SC001
RFA Number: YGQP98 00254-T
Chrysler PM: Gary Stanczak

Consultant: Leggette, Brashears & Graham, Inc
Address: 1710 W. Co. Rd. E
St. Paul, MN.
Consultant PM: Ken Vogel
Phone: 651-490-1405 Fax: 651-490-1006

Turn-around Time Request:
24 calendar hrs.
48 calendar hrs.
10 days
28 days

Data Package Deliverables: (circle)
Chrysler Level 1
Chrysler Level 2
Other (specify):

Matrix Codes
S - Soil
SW - Surface Water
GW - Groundwater
A - Air
Sed. - Sediment
O - Other (specify) Sparge Water

Field Sample Identification	Date Collected	Time Collected	Grab (G) or Composite (C)	Matrix Code	Total # of Containers	8260	Lab Use Only: Volatiles pH <2	Metals pH < 2	Cyanide pH > 12	Other	Remarks
PZ-9D	10/15/98	8:50	G	GW	2	X					
MW-10S		9:30			2	X					
PZ-10I		9:35			2	X					
PZ-17D		10:10			2	X					
PZ-17I		10:20			2	X					
MWA-1		11:00			2	X					
MWA-4		14:15			2	X					
Sparge H2O		16:45		O	2	X	Time added per Dave Strand DE 10/19/98				
MW-20S	10/14/98	10:45			3	X					

Sampler(s): Daniel Strand

Bottles Relinquished under Airbill No. 4287 4957 7498

Samples Relinquished under Airbill No. 802495 3462

Temperature (corrected) 4.0 C open @ 10:40am DE 10/17/98

Relinquished by:	Date:	Time:	Received by:	Date:	Time:	Custody Seal Intact?
Daniel Strand	10/17/98					Yes No
						Yes No
			Received for Laboratory by: Diane Ellmore	10/17/98	10:40am	Yes No

Cooler ID # 7

Is RFA sampling complete? Yes No

Chrysler Corporation 800 Chrysler Drive, CIMS 482-00-51, Auburn Hills, Michigan 48326-2757

Distribution: White copy: Data package Yellow: Retained by laboratory Pink: Retained by sampler

C/C Sealed
Samples intact
Cooler temp 6

Samples placed in storage
ID 4 DE 10/17/98 11:40am

Revision No. 1
Created: September 23, 1997

MEMORANDUM

To: Mark Bevan
Kenny McDaniel
Brian Neptune
Roy Sutton

From: Diane Ellmore

Date: October 19, 1998

Re: Case 33902

SDG 25401

CCN: 914740 ID corrected in LIMS. ID is now MW-7S

CCN: 914730 ID corrected in LIMS. ID is now MWA-6DUP

SDG 25403

CCN: 914888 Sample logged into LIMS on 10/19/98 due to ID discrepancy on COC verses bottle labels. Sample is backdated in LIMS to 10/17/98 (actual receipt date).

COMPUCHEM
a division of Liberty Analytical

LOG-IN VERIFICATION

Client: Chrysler Project: RFA 254

Case: 33902 Date Received: 10/17/98

Were all sample I.D.'s checked? Yes * see corrective action / No

Were all analyses on COC also on receipt log? Yes / No

Were any associated line item's missing? Yes / No

Were all parameter's logged in? Yes / No

Were correct method numbers received? Yes / No

Is any information absent from receiving log header? Yes / No

Were all blank lines on the receiving log z'ed out? Yes / No

Was TAT verified (quick turn line items used?) Yes / No

Was QC designated and verified? Yes / No / N/A

Is the field COC complete (signed/dated, etc)? Yes / No

Were all comments/issues recorded on COC? Yes / No

Signature: Diane Ellmore Date: 10/19/98

Corrective Action

Changed ID for MW-75 to MW-7S. Changed ID on CCN 914730 from MWA-6 to MWA-6DUP. ~~Sample~~ CCN 914888 rec'd 10/19 & backdated to 10/17 due to ID discrepency on COC & bottle labels

Completed By: Diane Ellmore Date: 10/19/98

LEGGETTE BRASHEARS & GRAHAM

ATTN: MR. KEN VOGEL
1210 WEST COUNTY Rd. E, STE700
ST. PAUL, MN 55112

RECEIVE DATE: 10/17/98
QUOTE NUMBER: 98-00070800000501112
ORDER NUMBER: 33902

SAMPLE ID	TURNAROUND** TIME	ANALYSIS	COMPUCHEM NUMBER
E101498-1	10	TCL Voa/Meth. 8260(25ml)/Water/Case ID	914726
E101498-2	10	TCL Voa/Meth. 8260(25ml)/Water/Case ID	914753
E101598-3	10	TCL Voa/Meth. 8260(25ml)/Water/Case ID	914764
MW-10S	10	TCL Voa/Meth. 8260(25ml)/Water/Case ID	914768
MW-11S	10	TCL Voa/Meth. 8260(25ml)/Water/Case ID	914754
MW-11SDUP	10	TCL Voa/Meth. 8260(25ml)/Water/Case ID	914755
MW-15S	10	TCL Voa/Meth. 8260(25ml)/Water/Case ID	914752
MW-18S	10	TCL Voa/Meth. 8260(25ml)/Water/Case ID	914737
MW-19S	10	TCL Voa/Meth. 8260(25ml)/Water/Case ID	914734
MW-20S	10	TCL Voa/Meth. 8260(25ml)/Water/Case ID	914777
MW-75 TS	10	TCL Voa/Meth. 8260(25ml)/Water/Case ID	914740
MW-8S	10	TCL Voa/Meth. 8260(25ml)/Water/Case ID	914763
MWA-1	10	TCL Voa/Meth. 8260(25ml)/Water/Case ID	914774
MWA-2	10	TCL Voa/Meth. 8260(25ml)/Water/Case ID	914760
MWA-3	10	TCL Voa/Meth. 8260(25ml)/Water/Case ID	914758
MWA-4	10	TCL Voa/Meth. 8260(25ml)/Water/Case ID	914775
MWA-5	10	TCL Voa/Meth. 8260(25ml)/Water/Case ID	914743
MWA-6	10	TCL Voa/Meth. 8260(25ml)/Water/Case ID	914744
MWA-6DUP	10	TCL Voa/Meth. 8260(25ml)/Water/Case ID	914746
MWB-1	10	TCL Voa/Meth. 8260(25ml)/Water/Case ID	914730
MWB-2	10	TCL Voa/Meth. 8260(25ml)/Water/Case ID	914738
MWB-3	10	TCL Voa/Meth. 8260(25ml)/Water/Case ID	914756
MWB-4	10	TCL Voa/Meth. 8260(25ml)/Water/Case ID	914732
MWB-5	10	TCL Voa/Meth. 8260(25ml)/Water/Case ID	914742
MWB-6	10	TCL Voa/Meth. 8260(25ml)/Water/Case ID	914762
MWC-1	10	TCL Voa/Meth. 8260(25ml)/Water/Case ID	914729
MWC-2	10	TCL Voa/Meth. 8260(25ml)/Water/Case ID	914739
MWC-3	10	TCL Voa/Meth. 8260(25ml)/Water/Case ID	914757
PZ-10I	10	TCL Voa/Meth. 8260(25ml)/Water/Case ID	914769
PZ-12D	10	TCL Voa/Meth. 8260(25ml)/Water/Case ID	914751
PZ-12I	10	TCL Voa/Meth. 8260(25ml)/Water/Case ID	914750
PZ-13I	10	TCL Voa/Meth. 8260(25ml)/Water/Case ID	914745
PZ-14I	10	TCL Voa/Meth. 8260(25ml)/Water/Case ID	914759
PZ-16D	10	TCL Voa/Meth. 8260(25ml)/Water/Case ID	914761

** Please note that turnaround time and sample due dates will be, whenever applicable, calculated and determined by the last sample received in a Sample Delivery Group.

10/19

LEGGETTE BRASHEARS & GRAHAM
ATTN: MR. KEN VOGEL
1210 WEST COUNTY Rd. E, STE700
ST. PAUL, MN 55112

RECEIVE DATE: 10/17/98
QUOTE NUMBER: 98-00070800000501112
ORDER NUMBER: 33902

SAMPLE ID	TURNAROUND** TIME	ANALYSIS	COMPUCHEM NUMBER
PZ-17D ✓	10	TCL Voa/Meth. 8260(25ml)/Water/Case ID	914770
PZ-17I ✓	10	TCL Voa/Meth. 8260(25ml)/Water/Case ID	914773
PZ-19I ✓	10	TCL Voa/Meth. 8260(25ml)/Water/Case ID	914735
PZ-20D ✓	10	TCL Voa/Meth. 8260(25ml)/Water/Case ID	914736
PZ-21I ✓	10	TCL Voa/Meth. 8260(25ml)/Water/Case ID	914733
PZ-22I ✓	10	TCL Voa/Meth. 8260(25ml)/Water/Case ID	914731
PZ-7I ✓	10	TCL Voa/Meth. 8260(25ml)/Water/Case ID	914741
PZ-8D ✓	10	TCL Voa/Meth. 8260(25ml)/Water/Case ID	914766
PZ-8I ✓	10	TCL Voa/Meth. 8260(25ml)/Water/Case ID	914765
PZ-9D ✓	10	TCL Voa/Meth. 8260(25ml)/Water/Case ID	914767
SPARGEH2O ✓	10	TCL Voa/Meth. 8260(25ml)/Water/Case ID	914776
TBLK101498 ✓	10	TCL Voa/Meth. 8260(25ml)/Water/Case ID	914747

914888
PZ-15I
added
once ID confirmed
JE 10/19

JE 10/19

** Please note that turnaround time and sample due dates will be, whenever applicable, calculated and determined by the last sample received in a Sample Delivery Group.

CompuChem

WATER BATCH SHEET

Page 1 of 2

RFA 254

Date Batched 10/20/98

Case 33902.25402

Instrument Code

LINKER W8260 TAT 10 SOW

	CCN	CLIENT ID	QC SAMPLE TYPE	QC SAMPLE ORIGINAL	pH	TIME	DATE RUN	INST. #	OPERATOR	H/T	VOLUME/ INSTRUCTIONS	SCREEN BOTTLE #	ANALYSIS BOTTLE #
1)	914748		SS	914760	–	0104	10.24.98	54	2230		1355/1045 150uL	of	of
2)	914749		SS	914760	–	0135	↓	↓	↓		↓	of	of
3)	914747	TBLK101498			1	2034	10.21.98	56	2355	10/28		of	of
4)	914750	PZ-12I			1	2124					2mL	of	of
5)	914751	PZ-12D			1	2201					2.5mL	of	of
6)	914752	MW-15S			1	2239					5mL	of	of
7)	914753	E101498-2			1	2315						of	of
8)	914754	MW-11S			1	2351					350uL	of	of
9)	914755	MW-11S DUP 10.21.98 RP			1	0026					↓	of	of
10)	914756	MWB-3			1	102					1.5mL	of	of
11)	914757	MWC-3			1	138	↓	↓	↓		RN	of	of
12)	914759	PZ-14I			1	1255	102298	56	2361		5mL	of	of
13)	914760	MWA-2			1	1331				↓	USE 914760 425uL FOR QC	of	of
14)	914761	PZ-16D			1	1407				10/29	300uL	of	of
15)	914762	MWB-6			1	1440					300uL	of	of
16)	914763	MW-8S			5	1521					250uL	of	of
17)	914764	E101598-3			1	1556					RN	of	of
18)	914765	PZ-8I			1	1630	↓	↓	↓		50uL	of	of
19)	914766	PZ-8D			1	1706	10.22.98	56	2230		6mL	of	of
20)	914767	PZ-9D			1	1747	↓	↓	↓		250uL	of	of
21)	914768	MW-10S			1	0255	10.23.98	54	2230		75uL	of	of
22)	914769	PZ-10I			1	0328	↓	↓	↓	↓	100uL	of	of
23)	915061	VLCS70	LCS		–	1938	10.21.98	56	2355			of	of

Relinquished By Ref. 2	Date 10.21.98	Received By	Date 10.21.98
Relinquished By	Date 10.21.98	Received By Ref. 2	Date 10.21.98
Relinquished By Ref. 2	Date 102298	Received By	Date 102298
	102298		102298
Log Page Updated	102298		102298

Over

CompuChem

WATER BATCH SHEET

Page 2

RFA 254

SOW: TCL.SOW

2 of 2

Date Batched _____

Case 33902-25402

Instrument Code _____

LINKER W8260

TAT 10

SOW _____

	CCN	CLIENT ID	QC SAMPLE TYPE	QC SAMPLE ORIGINAL	pH	TIME	DATE RUN	INST. #	OPERATOR	H/T	VOLUME/ INSTRUCTIONS	SCREEN BOTTLE #	ANALYSIS BOTTLE #
1)	915602	VLCS 87	LCS		-	1151	102298	56	2361			of	of
2)	915603	VLCS 88	LCS		–	—	↓	↓	↓			of	of
3)	914747R'				–	0402	10.23.98	54	2230		RN	of	of
4)	914750R'				–	0436	↓	54	2230		175ml	of	of
5)	914751R'				–	1431	10.23.98	54	2347		6mL	of	of
6)	914756R'				–	1504					100ml	of	of
7)	914759R'				–	1537					5mL	of	of
8)	914760R'				–	1611			↓		150ul	of	of
9)	914761R'				–	1703			2230		1ml	of	of
10)	914762R'				–	1736					500ul	of	of
11)	914765R'				–	1810					35ml	of	of
12)	914766R'				–	1843					3.5ml	of	of
13)	914750R2				–	1919	↓	↓	↓		280ul	of	of
14)	914767R'				–	2319	10.23.98	54	2240		130ul	of	of
15)	914756R2				–	2354	↓				150ul	of	of
16)	914759R2				–	0029	10.24.98	↓	↓		3mL	of	of
17)	916198	VLCS06			–	2241	102398	54	2230			of	of
18)												of	of
19)												of	of
20)												of	of
21)												of	of
22)												of	of
23)											10.24.98 KP	of	of

Relinquished By [illegible] Date 102398 Received By (2347) KP Date 102398

Relinquished By (2347) KP Date 102398 Received By [illegible] Date 102398

Relinquished By [illegible] Date 102398 Received By [illegible] Date 102398

Log Page Updated _____

Mark

COMPUCHEM
INTERNAL CHAIN-OF-CUSTODY

Laboratory: VOA

Requested By: Km

Water ✓ Soil ____ P.E. ____

Date: 10/20/98

Shift: 1 2 Sat (circle one)

EPA ____ Commercial ✓

	CCN	RECEIPT DATE	PRES.	PARAMETER	RECEIVING USE ONLY BOTTLE NUMBER
1	914747	10/17			2.2 of 1.2
2	750				3.3 of 2.3
3	751				2.3 of 3.3
4	752				2.2 of 1.2
5	753				1.2 of 2.2
6	754				1.2 of 2.2
7	755				1.2 of 2.2
8	756				1.2 of 2.2
9	757				2.2 of 1.2
10	759				2.2 of 1.2
11	760			10-20-98 PM	~~4.6~~ 1.4 of 3.4
12	761				1.2 of 2.2
13	762				1.2 of 2.2
14	763				1.2 of 2.2
15	764				1.2 of 2.2
16	765				1.2 of 2.2
17	766				1.2 of 2.2
18	767				2.2 of 1.2
19	768				1.2 of 2.2
20	769				1.2 of 2.2

Relinquished By: P.M. Coy Date: 10-20-98

Received By: [illegible] Date: 10-20-98

Relinquished By: ____ Date: ____

Received By: ____ Date: ____

Comments:

CompuChem Receiving Log

Client: Chrysler \ LBG
Order #: 33902
Project: RFA #254
Quote #: 98-7080
Account #: 50112

Received on: 10-17-98 # of COC's: 5
Delivered by: FED-EX
Freight #: See Various COC's
Subcontract Y / (N)
TAT: Verbal _____ Hardcopy 10 day

PPS / (RFA #) 254 Page 1 of 3
Lab Instructions: TCL VOCs

SDG	REQ	SAMPLE ID	CCN	AMOUNT / CONTAINER	PARAMETER	ANALYSIS CODE	LINE ITEM	SAMPLE DATE	MX	PH
25401	1	E101498-1 (EB)	914726	3-60ml / VOA	TCL VOA	1356	1	10/14/98	WA	N/A
	2	MWC-1	729							
	3	MWB-1	730							
	4	PZ-22I	731							
	5	MWB-4 *	732							
	6	PZ-21I	733							
	7	MW-19S	734							
	8	~~MW~~ PZ-19I	735							
	9	PZ-20D *	736							
	10	MW-18S	737							
	11	MWB-2 *	738							
	12	MWC-2	739							
	13	MW-75	740							
	14	PZ-7I	741							
	15	MWB-5	742							
	16	MWA-5	743							
	17	MWA-6	744							
	18	PZ-13I	745							
	19	MWA-6 DUP	746							
25402	20	TBLK101498 (TB)	747	2-60ml / VOA						

Logged In By: Melissa Stew
Order Entered By: Melissa Stew
Cyanide samples checked for sulfide and chlorine Y / NA
Received in good condition (Y) / N
Holding Blank(s): Counter / Page / CCN's /
Temperature(s) 4 °C

CompuChem Receiving Log

Client: Chrysler
Order #: 33902
Project: RFA 254
Quote #: 98-7080
Account #: 501112

Received on: 10/17/98 # of COC's ____
Delivered by: Federal Express
Freight #: ____
Subcontract Y / (N) see pg 1
TAT: Verbal ____ Hardcopy 10 day

PPS / RFA # ____ A
Page 2 of 3
Lab Instructions: see pg 1

SDG	REQ	SAMPLE ID	CCN	AMOUNT / CONTAINER	PARAMETER	ANALYSIS CODE	LINE ITEM	SAMPLE DATE	MX	PH
25402	21	PZ-12I	914750	3-60ml V	TCL VOA	1356	1	10/14/98	WA	NA
	22	PZ-12D	914751							
	23	MW-15S	752	2-60ml V						
	24	TE101498-2	753							
25403	25	PZ-15I	914888							
25402	26	MW-11S	914754							
	27	MW-11SDUP	755							
	28	MWB-3	756							
	29	MWC-3	757							
25401	30	MWA-3 (MS/MSD)	758	4-60ml-V						
25402	31	PZ-14I	759	2-60ml-V						
	32	MWA-2 (MS/MSD)	760	4-60ml-V						
	33	PZ-16D	761	2-60ml VOA						
	34	MWB-6	762					10/15/98		
	35	MW-8S	763							
	36	TE101598-3	764							
	37	PZ-8I	765							
	38	PZ-8D	766							
	39	PZ-9D	767							
	40	MW-10S	768							

Logged In By: Melissa St 10/14

Order Entered By: Melissa St

Cyanide samples checked for sulfide and chlorine Y / NA

Received in good condition Y / N

Holding Blank(s): Counter / Page ____ / ____ CCN's ____ / ____

Temperature(s) 4 °C

CompuChem Receiving Log

ient : Chrysler
rder # 1
oject : see pg 1
uote # see pg 1
ccount # see pg 1

Received on : _____ # of COC's 1
Delivered by : 1
Freight # see pg 1
Subcontract Y / N see pg 1
TAT : Verbal _____ Hardcopy _____

PPS / RFA # _____ Page 3 of 3
Lab Instructions : see pg 1

SDG	REQ	SAMPLE ID	CCN	AMOUNT / CONTAINER	PARAMETER	ANALYSIS CODE	LINE ITEM	SAMPLE DATE	MX	pH
25402	41 40	PZ-10I	914769	2-60ml V	TCL VOA	1356	1	10/15/98	WA	N/A
25403	42 41	PZ-17D	914770							
	43 42	PZ-17I	914773							
	44 43	MWA-1	914774							
	45 44	MWA-4	914775							
	46 45	SPARGE H20	914776							
	47 46	MW-20S	914777	3-60ml V				10/14/98		
	10/16/98									
0										
1										
2										
3										
4										
5										
6										
7										
8										
9										
10										

MS 10/16/98

Logged In By : Melissa St
Order Entered By : Melissa St

Cyanide samples checked for sulfide and chlorine Y / NA
Received in good condition Y / N _____

Holding Blank(s) : Counter / Page _____ / _____ CCN's _____ /
Temperature(s) 4 °C

1A
VOLATILE ORGANICS ANALYSIS DATA SHEET

SAMPLE NO.

E101498-2

Project: RFA254 Date Sampled: 10/14/98

Lab Code: COMPU Case No.: 33902 SAS No.: SDG No.: 25402

Matrix: (soil/water) WATER Lab Sample ID: 914753

Sample wt/vol: 25.0 (g/mL) ML Lab File ID: CN014753B56.D

Level: (low/med) LOW Date Received: 10/17/98

% Moisture: not dec. _____ Date Analyzed: 10/21/98

GC Column:DB624 ID: 0.53 (mm) Dilution Factor: 1.0

Soil Extract Volume: _____(uL) Soil Aliquot Volume: _____(uL)

CONCENTRATION UNITS: UG/L

CAS NO.	COMPOUND	DL	CONC	Q
74-83-9	Bromomethane	0.5		U
75-01-4	Vinyl Chloride	1		U
75-00-3	Chloroethane	0.5		U
75-09-2	Methylene Chloride	10	3	JB
75-35-4	1,1-Dichloroethene	0.8		U
75-34-3	1,1-Dichloroethane	0.5		U
67-66-3	Chloroform	0.8		U
107-06-2	1,2-Dichloroethane	0.8		U
71-55-6	1,1,1-Trichloroethane	0.8		U
56-23-5	Carbon Tetrachloride	1		U
75-27-4	Bromodichloromethane	0.5		U
10061-01-5	cis-1,3-Dichloropropene	0.5		U
79-01-6	Trichloroethene	0.8		U
124-48-1	Dibromochloromethane	0.5		U
79-00-5	1,1,2-Trichloroethane	0.8		U
71-43-2	Benzene	0.8		U
10061-02-6	trans-1,3-Dichloropropene	0.8		U
75-25-2	Bromoform	0.5		U
127-18-4	Tetrachloroethene	0.8		U
79-34-5	1,1,2,2-Tetrachloroethane	0.5		U
108-88-3	Toluene	0.8		U
108-90-7	Chlorobenzene	0.5		U
100-41-4	Ethylbenzene	0.5		U
100-42-5	Styrene	0.5		U
78-87-5	1,2-Dichloropropane	0.8		U
74-87-3	Chloromethane	1		U
75-15-0	Carbon disulfide	0.5		U
67-64-1	Acetone	5	2	JB
108-10-1	4-Methyl-2-pentanone	2		U
591-78-6	2-hexanone	2		U
78-93-3	2-butanone	3		U
156-60-5	trans-1,2-Dichloroethene	0.8		U
156-59-2	cis-1,2-Dichloroethene	0.5		U

1A
VOLATILE ORGANICS ANALYSIS DATA SHEET

SAMPLE NO.

E101498-2

Project: RFA254 Date Sampled: 10/14/98

Lab Code: COMPU Case No.: 33902 SAS No.: SDG No.: 25402

Matrix: (soil/water) WATER Lab Sample ID: 914753

Sample wt/vol: 25.0 (g/mL) ML Lab File ID: CN014753B56.D

Level: (low/med) LOW Date Received: 10/17/98

% Moisture: not dec. _____ Date Analyzed: 10/21/98

GC Column:DB624 ID: 0.53 (mm) Dilution Factor: 1.0

Soil Extract Volume: _____(uL) Soil Aliquot Volume: _____(uL)

CONCENTRATION UNITS: UG/L

CAS NO.	COMPOUND	DL	CONC	Q
1330-20-7	Xylene (total)	0.5		U

1A
VOLATILE ORGANICS ANALYSIS DATA SHEET

SAMPLE NO.

E101598-3

Project: RFA254 Date Sampled: 10/15/98

Lab Code: COMPU Case No.: 33902 SAS No.: SDG No.: 25402

Matrix: (soil/water) WATER Lab Sample ID: 914764

Sample wt/vol: 25.0 (g/mL) ML Lab File ID: CN014764A56.D

Level: (low/med) LOW Date Received: 10/17/98

% Moisture: not dec. _____ Date Analyzed: 10/22/98

GC Column:DB624 ID: 0.53 (mm) Dilution Factor: 1.0

Soil Extract Volume: _____(uL) Soil Aliquot Volume: _____(uL)

CONCENTRATION UNITS: UG/L

CAS NO.	COMPOUND	DL	CONC	Q
74-83-9	Bromomethane	0.5		U
75-01-4	Vinyl Chloride	1		U
75-00-3	Chloroethane	0.5		U
75-09-2	Methylene Chloride	10	3	JB
75-35-4	1,1-Dichloroethene	0.8		U
75-34-3	1,1-Dichloroethane	0.5		U
67-66-3	Chloroform	0.8		U
107-06-2	1,2-Dichloroethane	0.8		U
71-55-6	1,1,1-Trichloroethane	0.8		U
56-23-5	Carbon Tetrachloride	1		U
75-27-4	Bromodichloromethane	0.5		U
10061-01-5	cis-1,3-Dichloropropene	0.5		U
79-01-6	Trichloroethene	0.8		U
124-48-1	Dibromochloromethane	0.5		U
79-00-5	1,1,2-Trichloroethane	0.8		U
71-43-2	Benzene	0.8		U
10061-02-6	trans-1,3-Dichloropropene	0.8		U
75-25-2	Bromoform	0.5		U
127-18-4	Tetrachloroethene	0.8		U
79-34-5	1,1,2,2-Tetrachloroethane	0.5		U
108-88-3	Toluene	0.8		U
108-90-7	Chlorobenzene	0.5		U
100-41-4	Ethylbenzene	0.5		U
100-42-5	Styrene	0.5		U
78-87-5	1,2-Dichloropropane	0.8		U
74-87-3	Chloromethane	1		U
75-15-0	Carbon disulfide	0.5		U
67-64-1	Acetone	5	3	JB
108-10-1	4-Methyl-2-pentanone	2		U
591-78-6	2-hexanone	2		U
78-93-3	2-butanone	3		U
156-60-5	trans-1,2-Dichloroethene	0.8		U
156-59-2	cis-1,2-Dichloroethene	0.5		U

1A
VOLATILE ORGANICS ANALYSIS DATA SHEET

SAMPLE NO.

E101598-3

Project: RFA254 Date Sampled: 10/15/98

Lab Code: COMPU Case No.: 33902 SAS No.: SDG No.: 25402

Matrix: (soil/water) WATER Lab Sample ID: 914764

Sample wt/vol: 25.0 (g/mL) ML Lab File ID: CN014764A56.D

Level: (low/med) LOW Date Received: 10/17/98

% Moisture: not dec. _____ Date Analyzed: 10/22/98

GC Column:DB624 ID: 0.53 (mm) Dilution Factor: 1.0

Soil Extract Volume: _____(uL) Soil Aliquot Volume: _____(uL)

CONCENTRATION UNITS: UG/L

CAS NO.	COMPOUND	DL	CONC	Q
1330-20-7	Xylene (total)	0.5		U

FORM I VOA

1A
VOLATILE ORGANICS ANALYSIS DATA SHEET

SAMPLE NO.

MW-10S

Project: RFA254 Date Sampled: 10/15/98

Lab Code: COMPU Case No.: 33902 SAS No.: SDG No.: 25402

Matrix: (soil/water) WATER Lab Sample ID: 914768

Sample wt/vol: 25.0 (g/mL) ML Lab File ID: CN014768B54.D

Level: (low/med) LOW Date Received: 10/17/98

% Moisture: not dec. _____ Date Analyzed: 10/23/98

GC Column:SP624 ID: 0.53 (mm) Dilution Factor: 357.0

Soil Extract Volume: _____(uL) Soil Aliquot Volume: _____(uL)

CONCENTRATION UNITS: UG/L

CAS NO.	COMPOUND	DL	CONC	Q
74-83-9	Bromomethane	180		U
75-01-4	Vinyl Chloride	360	120	J
75-00-3	Chloroethane	180		U
75-09-2	Methylene Chloride	5400	390	JB
75-35-4	1,1-Dichloroethene	270		U
75-34-3	1,1-Dichloroethane	180		U
67-66-3	Chloroform	270		U
107-06-2	1,2-Dichloroethane	270		U
71-55-6	1,1,1-Trichloroethane	270	170	J
56-23-5	Carbon Tetrachloride	360		U
75-27-4	Bromodichloromethane	180		U
10061-01-5	cis-1,3-Dichloropropene	180		U
79-01-6	Trichloroethene	270	4800	
124-48-1	Dibromochloromethane	180		U
79-00-5	1,1,2-Trichloroethane	270		U
71-43-2	Benzene	270		U
10061-02-6	trans-1,3-Dichloropropene	270		U
75-25-2	Bromoform	180		U
127-18-4	Tetrachloroethene	270		U
79-34-5	1,1,2,2-Tetrachloroethane	180		U
108-88-3	Toluene	270		U
108-90-7	Chlorobenzene	180		U
100-41-4	Ethylbenzene	180		U
100-42-5	Styrene	180		U
78-87-5	1,2-Dichloropropane	270		U
74-87-3	Chloromethane	360		U
75-15-0	Carbon disulfide	180		U
67-64-1	Acetone	1800	720	JB
108-10-1	4-Methyl-2-pentanone	710		U
591-78-6	2-hexanone	710		U
78-93-3	2-butanone	1100		U
156-60-5	trans-1,2-Dichloroethene	270		U
156-59-2	cis-1,2-Dichloroethene	180	2000	

1A
VOLATILE ORGANICS ANALYSIS DATA SHEET

SAMPLE NO.

MW-10S

Project: RFA254 Date Sampled: 10/15/98

Lab Code: COMPU Case No.: 33902 SAS No.: SDG No.: 25402

Matrix: (soil/water) WATER Lab Sample ID: 914768

Sample wt/vol: 25.0 (g/mL) ML Lab File ID: CN014768B54.D

Level: (low/med) LOW Date Received: 10/17/98

% Moisture: not dec. _____ Date Analyzed: 10/23/98

GC Column:SP624 ID: 0.53 (mm) Dilution Factor: 357.0

Soil Extract Volume: _____(uL) Soil Aliquot Volume: _____(uL)

CONCENTRATION UNITS: UG/L

CAS NO.	COMPOUND	DL	CONC	Q
1330-20-7	Xylene (total)	180		U

1A
VOLATILE ORGANICS ANALYSIS DATA SHEET

SAMPLE NO.

MW-11S

Project: RFA254 Date Sampled: 10/14/98

Lab Code: COMPU Case No.: 33902 SAS No.: SDG No.: 25402

Matrix: (soil/water) WATER Lab Sample ID: 914754

Sample wt/vol: 25.0 (g/mL) ML Lab File ID: CN014754B56.D

Level: (low/med) LOW Date Received: 10/17/98

% Moisture: not dec. _____ Date Analyzed: 10/21/98

GC Column:DB624 ID: 0.53 (mm) Dilution Factor: 71.0

Soil Extract Volume: _____(uL) Soil Aliquot Volume: _____(uL)

CONCENTRATION UNITS: UG/L

CAS NO.	COMPOUND	DL	CONC	Q
74-83-9	Bromomethane	36		U
75-01-4	Vinyl Chloride	71		U
75-00-3	Chloroethane	36		U
75-09-2	Methylene Chloride	710	63	JB
75-35-4	1,1-Dichloroethene	53		U
75-34-3	1,1-Dichloroethane	36		U
67-66-3	Chloroform	53		U
107-06-2	1,2-Dichloroethane	53		U
71-55-6	1,1,1-Trichloroethane	53	68	
56-23-5	Carbon Tetrachloride	71		U
75-27-4	Bromodichloromethane	36		U
10061-01-5	cis-1,3-Dichloropropene	36		U
79-01-6	Trichloroethene	53	1200	
124-48-1	Dibromochloromethane	36		U
79-00-5	1,1,2-Trichloroethane	53		U
71-43-2	Benzene	53		U
10061-02-6	trans-1,3-Dichloropropene	53		U
75-25-2	Bromoform	36		U
127-18-4	Tetrachloroethene	53		U
79-34-5	1,1,2,2-Tetrachloroethane	36		U
108-88-3	Toluene	53		U
108-90-7	Chlorobenzene	36		U
100-41-4	Ethylbenzene	36		U
100-42-5	Styrene	36		U
78-87-5	1,2-Dichloropropane	53		U
74-87-3	Chloromethane	71		U
75-15-0	Carbon disulfide	36		U
67-64-1	Acetone	360	150	JB
108-10-1	4-Methyl-2-pentanone	140		U
591-78-6	2-hexanone	140		U
78-93-3	2-butanone	210		U
156-60-5	trans-1,2-Dichloroethene	53		U
156-59-2	cis-1,2-Dichloroethene	36	190	

1A
VOLATILE ORGANICS ANALYSIS DATA SHEET

SAMPLE NO.

MW-11S

Project: RFA254 Date Sampled: 10/14/98

Lab Code: COMPU Case No.: 33902 SAS No.: SDG No.: 25402

Matrix: (soil/water) WATER Lab Sample ID: 914754

Sample wt/vol: 25.0 (g/mL) ML Lab File ID: CN014754B56.D

Level: (low/med) LOW Date Received: 10/17/98

% Moisture: not dec. _____ Date Analyzed: 10/21/98

GC Column:DB624 ID: 0.53 (mm) Dilution Factor: 71.0

Soil Extract Volume: _____(uL) Soil Aliquot Volume: _____(uL)

CONCENTRATION UNITS: UG/L

CAS NO.	COMPOUND	DL	CONC	Q
1330-20-7	Xylene (total)	36		U

1A
VOLATILE ORGANICS ANALYSIS DATA SHEET

SAMPLE NO.

MW-11SDUP

Project: RFA254 Date Sampled: 10/14/98

Lab Code: COMPU Case No.: 33902 SAS No.: SDG No.: 25402

Matrix: (soil/water) WATER Lab Sample ID: 914755

Sample wt/vol: 25.0 (g/mL) ML Lab File ID: CN014755B56.D

Level: (low/med) LOW Date Received: 10/17/98

% Moisture: not dec. _____ Date Analyzed: 10/22/98

GC Column:DB624 ID: 0.53 (mm) Dilution Factor: 71.0

Soil Extract Volume: _____(uL) Soil Aliquot Volume: _____(uL)

CONCENTRATION UNITS: UG/L

CAS NO.	COMPOUND	DL	CONC	Q
74-83-9	Bromomethane	36		U
75-01-4	Vinyl Chloride	71		U
75-00-3	Chloroethane	36		U
75-09-2	Methylene Chloride	710	87	JB
75-35-4	1,1-Dichloroethene	53		U
75-34-3	1,1-Dichloroethane	36		U
67-66-3	Chloroform	53		U
107-06-2	1,2-Dichloroethane	53		U
71-55-6	1,1,1-Trichloroethane	53	94	
56-23-5	Carbon Tetrachloride	71		U
75-27-4	Bromodichloromethane	36		U
10061-01-5	cis-1,3-Dichloropropene	36		U
79-01-6	Trichloroethene	53	1700	
124-48-1	Dibromochloromethane	36		U
79-00-5	1,1,2-Trichloroethane	53		U
71-43-2	Benzene	53		U
10061-02-6	trans-1,3-Dichloropropene	53		U
75-25-2	Bromoform	36		U
127-18-4	Tetrachloroethene	53		U
79-34-5	1,1,2,2-Tetrachloroethane	36		U
108-88-3	Toluene	53		U
108-90-7	Chlorobenzene	36		U
100-41-4	Ethylbenzene	36		U
100-42-5	Styrene	36		U
78-87-5	1,2-Dichloropropane	53		U
74-87-3	Chloromethane	71		U
75-15-0	Carbon disulfide	36		U
67-64-1	Acetone	360	130	JB
108-10-1	4-Methyl-2-pentanone	140		U
591-78-6	2-hexanone	140		U
78-93-3	2-butanone	210		U
156-60-5	trans-1,2-Dichloroethene	53		U
156-59-2	cis-1,2-Dichloroethene	36	240	

1A
VOLATILE ORGANICS ANALYSIS DATA SHEET

SAMPLE NO.

MW-11SDUP

Project: RFA254 Date Sampled: 10/14/98

Lab Code: COMPU Case No.: 33902 SAS No.: SDG No.: 25402

Matrix: (soil/water) WATER Lab Sample ID: 914755

Sample wt/vol: 25.0 (g/mL) ML Lab File ID: CN014755B56.D

Level: (low/med) LOW Date Received: 10/17/98

% Moisture: not dec. _____ Date Analyzed: 10/22/98

GC Column:DB624 ID: 0.53 (mm) Dilution Factor: 71.0

Soil Extract Volume: _____(uL) Soil Aliquot Volume: _____(uL)

CONCENTRATION UNITS: UG/L

CAS NO.	COMPOUND	DL	CONC	Q
1330-20-7	Xylene (total)	36		U

1A
VOLATILE ORGANICS ANALYSIS DATA SHEET

SAMPLE NO.

MW-15S

Project: RFA254 Date Sampled: 10/14/98

Lab Code: COMPU Case No.: 33902 SAS No.: SDG No.: 25402

Matrix: (soil/water) WATER Lab Sample ID: 914752

Sample wt/vol: 25.0 (g/mL) ML Lab File ID: CN014752B56.D

Level: (low/med) LOW Date Received: 10/17/98

% Moisture: not dec. _____ Date Analyzed: 10/21/98

GC Column:DB624 ID: 0.53 (mm) Dilution Factor: 5.0

Soil Extract Volume: _____(uL) Soil Aliquot Volume: _____(uL)

CONCENTRATION UNITS: UG/L

CAS NO.	COMPOUND	DL	CONC	Q
74-83-9	Bromomethane	2		U
75-01-4	Vinyl Chloride	5		U
75-00-3	Chloroethane	2		U
75-09-2	Methylene Chloride	50	8	JB
75-35-4	1,1-Dichloroethene	4		U
75-34-3	1,1-Dichloroethane	2		U
67-66-3	Chloroform	4	2	J
107-06-2	1,2-Dichloroethane	4		U
71-55-6	1,1,1-Trichloroethane	4	2	J
56-23-5	Carbon Tetrachloride	5		U
75-27-4	Bromodichloromethane	2		U
10061-01-5	cis-1,3-Dichloropropene	2		U
79-01-6	Trichloroethene	4		U
124-48-1	Dibromochloromethane	2		U
79-00-5	1,1,2-Trichloroethane	4		U
71-43-2	Benzene	4		U
10061-02-6	trans-1,3-Dichloropropene	4		U
75-25-2	Bromoform	2		U
127-18-4	Tetrachloroethene	4	120	
79-34-5	1,1,2,2-Tetrachloroethane	2		U
108-88-3	Toluene	4		U
108-90-7	Chlorobenzene	2		U
100-41-4	Ethylbenzene	2		U
100-42-5	Styrene	2		U
78-87-5	1,2-Dichloropropane	4		U
74-87-3	Chloromethane	5		U
75-15-0	Carbon disulfide	2		U
67-64-1	Acetone	25		U
108-10-1	4-Methyl-2-pentanone	10		U
591-78-6	2-hexanone	10		U
78-93-3	2-butanone	15		U
156-60-5	trans-1,2-Dichloroethene	4		U
156-59-2	cis-1,2-Dichloroethene	2		U

1A
VOLATILE ORGANICS ANALYSIS DATA SHEET

SAMPLE NO.

MW-15S

Project: RFA254 Date Sampled: 10/14/98

Lab Code: COMPU Case No.: 33902 SAS No.: SDG No.: 25402

Matrix: (soil/water) WATER Lab Sample ID: 914752

Sample wt/vol: 25.0 (g/mL) ML Lab File ID: CN014752B56.D

Level: (low/med) LOW Date Received: 10/17/98

% Moisture: not dec. _____ Date Analyzed: 10/21/98

GC Column:DB624 ID: 0.53 (mm) Dilution Factor: 5.0

Soil Extract Volume: _____(uL) Soil Aliquot Volume: _____(uL)

CONCENTRATION UNITS: UG/L

CAS NO.	COMPOUND	DL	CONC	Q
1330-20-7	Xylene (total)	2		U

1A
VOLATILE ORGANICS ANALYSIS DATA SHEET

SAMPLE NO.

MW-8S

Project: RFA254 Date Sampled: 10/15/98

Lab Code: COMPU Case No.: 33902 SAS No.: SDG No.: 25402

Matrix: (soil/water) WATER Lab Sample ID: 914763

Sample wt/vol: 25.0 (g/mL) ML Lab File ID: CN014763A56.D

Level: (low/med) LOW Date Received: 10/17/98

% Moisture: not dec. _____ Date Analyzed: 10/22/98

GC Column:DB624 ID: 0.53 (mm) Dilution Factor: 100.0

Soil Extract Volume: _____(uL) Soil Aliquot Volume: _____(uL)

CONCENTRATION UNITS: UG/L

CAS NO.	COMPOUND	DL	CONC	Q
74-83-9	Bromomethane	50		U
75-01-4	Vinyl Chloride	100		U
75-00-3	Chloroethane	50		U
75-09-2	Methylene Chloride	1000	83	JB
75-35-4	1,1-Dichloroethene	75		U
75-34-3	1,1-Dichloroethane	50		U
67-66-3	Chloroform	75		U
107-06-2	1,2-Dichloroethane	75		U
71-55-6	1,1,1-Trichloroethane	75		U
56-23-5	Carbon Tetrachloride	100		U
75-27-4	Bromodichloromethane	50		U
10061-01-5	cis-1,3-Dichloropropene	50		U
79-01-6	Trichloroethene	75	240	
124-48-1	Dibromochloromethane	50		U
79-00-5	1,1,2-Trichloroethane	75		U
71-43-2	Benzene	75		U
10061-02-6	trans-1,3-Dichloropropene	75		U
75-25-2	Bromoform	50		U
127-18-4	Tetrachloroethene	75	2000	
79-34-5	1,1,2,2-Tetrachloroethane	50		U
108-88-3	Toluene	75		U
108-90-7	Chlorobenzene	50		U
100-41-4	Ethylbenzene	50		U
100-42-5	Styrene	50		U
78-87-5	1,2-Dichloropropane	75		U
74-87-3	Chloromethane	100		U
75-15-0	Carbon disulfide	50		U
67-64-1	Acetone	500		U
108-10-1	4-Methyl-2-pentanone	200		U
591-78-6	2-hexanone	200		U
78-93-3	2-butanone	300		U
156-60-5	trans-1,2-Dichloroethene	75		U
156-59-2	cis-1,2-Dichloroethene	50		U