Doc ID 347603 – 104(E) Response - AECOM - Part 3

(This document is a compilation of multiple prior Doc IDs)

EPA Region 5 Records Ctr.
347603

CATALYTIC COMBUSTION CORPORATION
OWNER'S MANUAL

Consultant: LBG MPLS MN.
LOCATION: Dayton Thermal Products

Description: HD Catalytic Oxidizer Vapor treatment System

Original CCC Job # 99-216
Retro fit CCC Job # J-00-0222

READ THIS MANUAL
for important safety, installation, operation and maintenance instructions.
Keep this manual with the unit at all times.

Issued: 12-03, 2001

Catalytic Combustion Corporation
709 21st Avenue
Bloomer, WI 54724

Phone: (715) 568-2882
Fax: (715) 568-2884

Table of Contents

Section

1. Safety

2. Installation
   - Instructions
   - Drawing No. 99216100

3. Equipment Description
   - Equipment Specifications
   - Catalyst Deactivation & Poisoning Agents
   - Drawings
     - General Arrangement No. 99216100
     - System P & ID No. 99216500
     - Gas Train P & ID No. 99216510

4. Oxidizer Control System Design
   - Operating Sequence
   - Mechanical
     - Bill of Materials
     - Component Cut Sheets
   - Electrical
     - Bill of Materials
     - Component Cut Sheets
     - Electrical Schematics No. 99216301-1 through 99216306-1
     - PLC Program
     - Control Settings

5. Scrubber Control System Design
   - Operating Sequence
   - Mechanical
     - Bill of Materials
     - Component Cut Sheets
   - Electrical
     - Bill of Materials
     - Component Cut Sheets
     - Electrical Schematics No. 99216301-1 through 99216306-1
     - PLC Program
     - Control Settings

6. Start-up and Operating Procedures

7. Maintenance

8. Troubleshooting

9. Warranty

10. Recommended Spare Parts

11. Manufacturer Product Manuals
    - Model E33 pH/ORP Analyzer
    - Model 3700E Conductivity Sensor
    - Model E33 Electrodeless
    - UDC 3300
    - LCP & Ryton pH sensor
    - DR 4500A
    - Series E Plus

Section 1 - Safety

Precautions

The Catalytic Combustion equipment and systems have been designed in such a manner as to present a minimum of safety hazards. It is, however, incumbent upon operating and maintenance personnel to follow safety procedures when in the area of the system and controls.

Potential Hazards

- All personnel shall be familiar with NFPA 70E electrical safety requirements for employee work places.
- Only competent, safety conscious personnel should have access to the area.
- Only qualified personnel should work on the electrical panel and controls. Follow all electrical and safety codes.
- Individuals working with this system must be familiar with the equipment and hazards involved and be fully trained in the operation of the equipment.
- All areas around the system must be restricted to authorized personnel only.
- Personnel in the area must wear safety equipment in compliance with plant and/or site safety standards.
- The system must be locked out and tagged before work is performed on any part of the system. Possible injury to personnel could otherwise occur.
- All safety guards and devices must be correctly installed and in place before operating equipment.
- Do not touch the flame rod or spark ignitor, or ground the electrode while the oxidizer is operating. This is an electrical shock hazard.
- Do not operate the oxidizer with the purge cycle shortened or bypassed. The purge cycle is factory-set for safe operation and must not be changed.
- Do not change damper or valve settings without first consulting CATALYTIC COMBUSTION CORP.
- Any fires that occur within the oxidizer and its related equipment should not be extinguished with water. Either a build-up of flammable substances or a faulty electrical circuit would most likely cause these fires. The proper fire fighting equipment must be available and operators must be trained in the use of the fire fighting equipment.

- Operators must be aware of hazards from handling and exposure to chemicals used in the quench/scrubber system. Proper training, personal protective equipment, safety showers and eye wash fountains must be available.

- All waste materials should be analyzed and disposed of in accordance with Lockheed procedures.

USE SAME FOR HYDROCHLORIC ACID AND SODIUM HYDROXIDE

5. EMPLOYEE SAFETY

5.1 EMPLOYEE EDUCATION AND TRAINING

Safety in handling sulfuric acid depends, to a great extent, upon the effectiveness of employee education, proper training in safe practices and the use of safe equipment, and intelligent supervision.

The education and training of employees to work safely and to use the personal protective equipment provided for them is the responsibility of supervision. Training classes for both new and old employees should be conducted periodically to maintain a high degree of safety in handling procedures. Employees should be thoroughly informed of the hazards that may result from improper handling of sulfuric acid, oleum or liquid SO_3. They should be cautioned to prevent spills, and thoroughly instructed regarding proper action to take in case they occur. (See 7.10.) Each employee should know what to do in an emergency and should be fully informed as to first aid measures. (See Section 11, FIRST AID.)

In addition to the above, employee education and training should include the following:

(a) Instruction and periodic drill or quiz regarding the locations, purpose, and use of emergency fire fighting equipment, fire alarms and emergency shutdown equipment such as valves and switches.

(b) Instructions and periodic drill or quiz regarding the locations, purpose, and use of personal protective equipment.

(c) Instruction and periodic drill or quiz regarding the locations of safety showers, eye-baths, bubbler drinking fountains, or the closest source of water for use in emergencies.

(d) Instructions to avoid all unnecessary inhalation of vapors of sulfuric acid and all direct contact with liquid.

(e) Instructions to report to the proper authority all cases of equipment failure.

5.2 SAFETY SHOWERS AND EYE WASH FOUNTAINS

Readily accessible, well marked, rapid action safety showers and eye wash fountains (preferably with warm water supply) must be available in the areas where sulfuric acid is being handled. Showers should have deluge type heads, easily accessible, plainly marked and controlled by quick-opening valves of the type that stay open. They should be capable of supplying large quantities of water under moderately high pressure. Blankets should be located near the safety showers. Eye wash fountains, or a ready source of running tap water, such as a drinking fountain or hose with a gentle flow of water should be immediately available for eye irrigation. All safety equipment should be inspected and tested at regular intervals, preferably daily and especially during freezing weather, to make sure it is in good working condition at all times.

5.3 PERSONAL PROTECTIVE EQUIPMENT

5.3.1 Availability and Use

While personal protective equipment is not an adequate substitute for good, safe working conditions, adequate ventilation, and intelligent conduct on the part of employees working with sulfuric acid, it is, in many instances, the only practical means of protecting the worker, particularly in emergency situations. One should keep firmly in mind that personal protective equipment protects only the worker wearing it, and other unprotected workers in the area may be exposed to danger.

The correct usage of personal protective equipment requires the education of the worker in proper employment of the equipment available to him. Under conditions which are sufficiently hazardous to require personal protective equipment, its use should be supervised and the type of protective equipment selected should be capable of control over any potential hazard.

The following personal protective equipment should be used when indicated.

5.3.2 Eye Protection

5.3.2.1 *Chemical Safety Goggles*

Cup-type or rubber framed goggles, equipped with the approved impact resistant glass or plastic lenses, should be worn whenever there is danger of sulfuric acid coming in contact with the eyes. Goggles should be carefully fitted to ensure maximum protection and comfort.

5.3.2.2 *Spectacle-Type Safety Goggles*

Metal or plastic rim safety spectacles with unperforated side shields which can be obtained with prescription safety lenses or suitable all plastic safety goggles may be used where continuous eye protection is desirable, as in laboratories. These types, however, should not be used where complete eye protection against sulfuric acid is needed.

5.3.2.3 *Face Shields*

Plastic shields (full length, eight inch minimum) with forehead protection may be worn in addition to chemical safety goggles where complete

face protection is desirable. Chemical safety goggles should always be worn as added protection where there is danger of material striking the eyes from underneath or around the sides of the face shield.

5.3.3 Respiratory Protection

Severe exposure to sulfuric acid may occur in tanks during equipment cleaning and repairs, when decontaminating areas following spills, or in case of failure of piping or equipment.

Employees who may be subject to such exposures should be provided with proper respiratory protection and trained in its use and care. Available types are described below.

NOTE: Respiratory protective equipment should bear U. S. Bureau of Mines approval and must be carefully maintained, inspected, cleaned and sterilized at regular intervals, and always before and after use by another person.

(a) *Self-contained Breathing Apparatus which permits the wearer to carry a supply of oxygen or air compressed in the cylinder, and the self-generating type which produces oxygen chemically.* These allow considerable mobility. The length of time a self-contained breathing apparatus provides protection varies according to the amount of air, oxygen or regenerating material carried. Compressed oxygen should not be used where there is danger of contact with flammable liquids, vapors, or sources of ignition, especially in confined spaces such as tanks or pits.

(b) *Positive Pressure Hose Masks supplied by blowers requiring no internal lubrication.* The wearer must be able to use the same route for exit as for entrance and must take precautions to keep the hose line free of entanglement. The air blower must be placed in an area free of contaminants.

(c) *Air-line Masks supplied with clean compressed air.* These are suitable for use only where conditions will permit safe escape in case of failure of the compressed air supply. These masks are usually supplied with air piped to the area from a compressor. It is extremely important that the air supply is taken from a safe source, and that it is not contaminated by oil decomposition from inadequate cooling at the compressor. The safer method is to use a separate compressor of the type not requiring internal lubrication.

Pressure reducing and relief valves, as well as suitable traps and filters, must be installed at all mask stations. An alternative arrangement frequently used is high pressure breathing air from standard (200 cu. ft.) cylinders, with a demand-type valve and face piece. This arrangement may also be used with 50-100 lb. clean piped plant air, and, as an additional precaution with the demand mask, a small cylinder of compressed air may be worn for use as an emergency escape from the area. Consult a safety equipment dealer for details on the proper use of Bureau of Mines approved equipment.

(d) *Industrial Canister Type Gas Masks, equipped with full face pieces and approved by the U. S. Bureau of Mines, fitted with the proper canister for absorbing sulfuric acid.* These will afford protection against concentrations not exceeding 2 per cent by volume when used in accordance with the manufacturer's instructions. The oxygen content of the air must not be less than 16 per cent by volume. The masks should be used for relatively short exposure periods only. They may not be suitable for use in an emergency since, at that time, the actual vapor concentration is unknown and an oxygen deficiency may exist. The wearer must be warned to leave the contaminated area immediately on detecting the odor of a harmful vapor. This may indicate that the mask is not functioning properly, the vapor concentration is too high, the canister is exhausted or the mask is not properly fitted.

NOTE: Where carbon monoxide or other gas having little or no odor may be encountered in addition to sulfuric acid, the mask should be equipped with an "all purpose canister" and a "timing device" or a colorimetric window indicator as approved by the U. S. Bureau of Mines.

5.3.4 Head Protection

"Hard" hats should be worn where there is danger from falling objects. If hard hats are not considered necessary, soft-brimmed hats or caps may be worn to give protection against liquid leaks and splashes.

5.3.5 Foot Protection

Rubber safety shoes with built-in steel toe caps are recommended for workers handling drums and carboys of sulfuric acid. Rubbers worn over leather safety shoes should be thoroughly cleaned after contamination.

5.3.6 Body, Skin and Hand Protection

Sustained or intermittent skin contact with liquid sulfuric acid will produce burns at the site of contact. Creams and ointments do not afford adequate protection. Rubber gloves and aprons should be worn when there is a possibility of body contact. Protective clothing contaminated by sulfuric acid should be flushed with flowing water promptly and cleaned inside and out each time it is used. Affected areas of the body should be flushed thoroughly with water. As a general hygienic measure, facilities for personal cleanliness should be provided, and washing before lunch and at the end of the work day should be encouraged.

Material Safety Data Sheet

Date last revised 2/15/93

I. General Information

Chemical Name & Synonyms	Trade Name & Synonyms: 10 pH Calibration Buffer
Chemical Family: pH Buffer	Formula: 25M1A1017
Proper DOT Shipping Name	DOT Hazard Classification
Manufacturer: Great Lakes Instruments, Inc.	Manufacturer's Phone Number: 414/355-3601
Manufacturer's Address: 8855 N. 55th Street, Milwaukee WI 53223	Chemtrec Phone Number

II. Ingredients

PRINCIPAL COMPONENTS	CAS #	Percent	Threshold Limit Value (units)
Water (H_2O)		> 98	NA
Sodium Bicarbonate	144-55-8	< 1	NE
Sodium Hydroxide	1310-73-2	< 1	$2mg/m^3$

III. Physical Data

Boiling Point (°F)	Specific Gravity (H_2O = 1)
Vapor Pressure (mm Hg.)	Percent Volatile By Volume (%)
Vapor Density (Air = 1)	Evaporation Rate (_____ = 1)
Solubility in Water	pH: 10

Appearance & Odor: Clear liquid - odor free

IV. Fire & Explosion Hazard Data

Flash Point (Test Method): Non-flammable	Auto Ignition Temperature	
Flammable Limits	LEL	UEL

Extinguishing Media: Any means suitable for other materials involved.

Special Fire Fighting Procedures

Unusual Fire & Explosion Hazards

V. Health Hazard Data

shold Limit Value	OSHA Threshold Limit Value	ACGIH Threshold Limit Value
None Established		

cinogen - NTP Program	Carcinogen - IARC Program
None	None

ptoms of Exposure

May irritate eyes on contact

Medical Conditions Aggravated By Exposure

Primary Route(s) of Entry

Skin and eye contact. Ingestion.

Emergency First Aid

Skin: Flush with water. Eyes: Flush thoroughly with with water. Get medical assistance for inflammation. Ingestion: call physician.

VI. Reactivity Data

Stability		Unstable	Conditions To Avoid
	X	Stable	
Incompatability			Materials To Avoid
Hazardous		May Occur	Conditions To Avoid
ymerization	X	Will Not Occur	
rdous Decomposition Products			

VII. Environmental Protection Procedures

Spill Response

Take up on absorbent - flush area with water.

Waste Disposal Method

Flush to sewer with excess water if local regulations permit.

VIII. Special Protection Information

Eye Protection Safety glasses	Skin Protection
Respiratory Protection (Specific Type)	Ventilation Recommended
Other Protection	

IX. Special Precautions

Hygienic Practices In Handling & Storage

Wash thoroughly after use. Keep in tightly closed container.

Precautions For Repair & Maintenance Of Contaminated Equipment

Other Precautions

Material Safety Data Sheet

Date last revised 2/15/93

I. General Information

Chemical Name & Synonyms	Trade Name & Synonyms 4 pH Calibration Buffer
Chemical Family pH Buffer	Formula 25M1A1014
Proper DOT Shipping Name	DOT Hazard Classification
Manufacturer Great Lakes Instruments, Inc.	Manufacturer's Phone Number 414/355-3601
Manufacturer's Address 8855 N. 55th St., Milwaukee WI 53223	Chemtrec Phone Number

II. Ingredients

PRINCIPAL COMPONENTS	CAS #	Percent	Threshold Limit Value (units)
Water (H_2O)		>98	NA
Potassium Acid Phtalate	877-24-7	< 1	NE
Hydrochloric Acid	7647-01-0	< 1	7mg/m^3

III. Physical Data

Boiling Point (°F)	Specific Gravity (H_2O = 1)
Vapor Pressure (mm Hg.)	Percent Volatile By Volume (%)
Vapor Density (Air = 1)	Evaporation Rate (_____ = 1)
Solubility in Water	pH 4

Appearance & Odor
Clear liquid - odor free

IV. Fire & Explosion Hazard Data

Flash Point (Test Method) Non-flammable	Auto Ignition Temperature	
Flammable Limits	LEL	UEL

Extinguishing Media
Any means suitable for other materials involved.

Special Fire Fighting Procedures

V. Health Hazard Data

4 pH

shold Limit Value
None Established

OSHA Threshold Limit Value

ACGIH Threshold Limit Value

cinogen - NTP Program
None

Carcinogen - IARC Program
None

ptoms of Exposure
May irritate eyes on contact

Medical Conditions Aggravated By Exposure

Primary Route(s) of Entry
Skin and eye contact. Ingestion.

Emergency First Aid
Skin: Flush with water. Eyes: Flush thoroughly with water. Get medical assistance for inflammation. Ingestion: call physician.

VI. Reactivity Data

Stability		Unstable	Conditions To Avoid
	X	Stable	
Incompatability			Materials To Avoid
Hazardous		May Occur	Conditions To Avoid
merization	X	Will Not Occur	
dous Decomposition Products			

VII. Environmental Protection Procedures

Spill Response
Take up on absorbent - flush area with water.

Waste Disposal Method
Flush to sewer with excess water if local regulations permit.

VIII. Special Protection Information

Eye Protection
Safety glasses

Skin Protection

Respiratory Protection (Specific Type)

Ventilation Recommended

Other Protection

IX. Special Precautions

Hygienic Practices In Handling & Storage
Wash thoroughly after use. Keep in tightly closed container.

Precautions For Repair & Maintenance Of Contaminated Equipment

Other Precautions

Material Safety Data Sheet

Date last revised 2/15/93

I. General Information

Chemical Name & Synonyms	Trade Name & Synonyms 7 pH Calibration Buffer
Chemical Family pH Buffer	Formula 25M1A1016
Proper DOT Shipping Name	DOT Hazard Classification
Manufacturer Great Lakes Instruments, Inc.	Manufacturer's Phone Number 414/355-3601
Manufacturer's Address 8855 N. 55th St., Milwaukee WI 53223	Chemtrec Phone Number

II. Ingredients

PRINCIPAL COMPONENTS	CAS #	Percent	Threshold Limit Value (units)
Water (H_2O)		> 97	NA
Potassium Phosphate	7778-77-0	< 1	NE
Sodium Hydroxide	1310-73-2	< 1	2mg/m^3
Thymol		< 1	NE

III. Physical Data

Boiling Point (°F)	Specific Gravity (H_2O = 1)
Vapor Pressure (mm Hg.)	Percent Volatile By Volume (%)
Vapor Density (Air = 1)	Evaporation Rate (_____ = 1)
Solubility in Water	pH 7

Appearance & Odor

Clear liquid - slight thyme odor.

IV. Fire & Explosion Hazard Data

Flash Point (Test Method) Non-flammable	Auto Ignition Temperature	
Flammable Limits	LEL	UEL

Extinguishing Media

Any means suitable for other materials involved.

Special Fire Fighting Procedures

Unusual Fire & Explosion Hazards

V. Health Hazard Data

7pH

;hold Limit Value	OSHA Threshold Limit Value	ACGIH Threshold Limit Value
None Established		

arcinogen - NTP Program	Carcinogen - IARC Program
None	None

ptoms of Exposure

May irritate eyes on contact

Medical Conditions Aggravated By Exposure

Primary Route(s) of Entry

Skin and eye contact. Ingestion.

Emergency First Aid

Skin: Flush with water. Eyes: Flush thoroughly with water. Get medical assistance for inflammation. Ingestion: call physician.

VI. Reactivity Data

Stability		Unstable	Conditions To Avoid
	X	Stable	
Incompatability			Materials To Avoid
Hazardous Polymerization		May Occur	Conditions To Avoid
	X	Will Not Occur	

Hazardous Decomposition Products

VII. Environmental Protection Procedures

Spill Response

Take up on absorbent - flush area with water.

Waste Disposal Method

Flush to sewer with excess water if local regulations permit.

VIII. Special Protection Information

Eye Protection Safety glasses	Skin Protection
Respiratory Protection (Specific Type)	Ventilation Recommended
Other Protection	

IX. Special Precautions

Hygienic Practices In Handling & Storage

Wash thoroughly after use. Keep in tightly closed container.

ons For Repair & Maintenance Of Contaminated Equipment

Other Precautions

Section 2 - Installation Instructions

HD SRCO 500G-Scrubber System

Caution: Use proper safety methods at all times when handling this unit. Have a qualified electrician connect all wiring.

Failure to follow these instructions may effect the system warranty.

Upon receipt of this unit inspect for any damage. If damage is noted, document the damage with the carrier/trucking company.

Handling Upon Receipt

- Remove all crating materials. Take special care not to damage the CPVC piping or component electrical wiring when removing crates.
- A crane and qualified operator or 5 ton fork truck and qualified operator is required for removing the SCRO 500G from the shipping truck and positioning the unit for assembly and operation.
- SCRO 500G weight is approximately 6500 LBS. Lifting rings (4 each) have been provided for crane cable connection. Length of cables (4 each) from the ring eye to the crane's lifting hook must be a minimum of 20 feet.
- CCC advises a level concrete pad to support the system.

HD SRCO 500G Positioning

- Place the oxidizer in the operating location. The base must be fully supported, (grout in place if necessary). Reference Drawing No. 99216100 to review basic dimensional information and positioning of the Oxidizer to the Scrubber system.
- The anchoring lugs (4 each) have been drilled for anchor bolts. Anchor the oxidizer to the concrete pad using four 1/2" or 9/16" anchor bolts.

Scrubber Base Positioning

- Removal of the scrubber from the shipping truck must be accomplished with a fork-lift (3 ton minimum) with 6 foot long (minimum length) tines.
- Place the scrubber base in its general location. The scrubber base must be fully supported under the base runners and level once secured, (grout in place if necessary). Reference Drawing No. 99216100 for dimensional information and positioning for connection to the Oxidizer.

Gasket installation

- Once all crating has been removed, install the Teflon tape gasket material to one side of mating flanges D,E,F see picture J8 for flange identification.

Note: When installing Teflon tape gasket material, make sure mating flange surfaces are clean. The gasket has an adhesive backing to hold the material in position. Apply the gasket to the ID of all bolt hole circles. Cross the ends of the gasket material at a bolt hole to form the seal. The gasket will compress once the bolts are secured. Most flanges have a gasket attached. Inspect these gaskets prior to assembly of the system. If the gasket appears incapable of forming a seal, remove the gasket and replace it with new gasket material.

Quench Tube Installation

- Install the quench tube on flange D (ref picture J8). Secure with 3/8" flat washers, lock washers, bolts and nuts. Apply a coating of copper-based anti-seize (provided) to the threads of each bolt. The anti-seize will prevent galling of the bolts and allow for easier future removal of all bolts.

Oxidizer Inlet, Outlet Transition and Crossover Pipe Installation

- Install the oxidizer outlet transition cone section to flange A. Use the dark gray Durabula gasket supplied, (ref picture J8). Secure the cone with 3/8" bolts. Apply a coating of copper-based anti-seize (provided) to the threads of each bolt.

- Install the Oxidizer process inlet with the flexible connector (attached). <u>The site process piping must be independently supported and must not transfer any weight to the flexible connector.</u>

- The crossover must be lifted with the mechanical assistance of a forklift or crane. Lifting lugs have been provided. Lower the crossover to meet B and C flanges (ref picture J8). (Mating flange rings of this portion of the system have been designed to slip on center to aid positioning of the Oxidizer and Scrubber. Use the dark gray Durabula gasket supplied on flanges B & C)

  Note: At this point you will need to make final position adjustments to the scrubber for proper alignment and fit of the crossover to the oxidizer. Ref CCC Drawing # 99216100 for approximate locations of equipment.

- Secure the crossover to the oxidizer and scrubber quench tower with 3/4" bolts provided. Apply anti-seize to the bolt threads. Install the 3/4" nuts provided. Tighten all flange bolts using a star pattern.

- The forklift or crane may now be removed from the crossover pipe.

- Four mounting holes have been provided in the scrubber base to secure to the concrete pad. Anchoring the scrubber to a concrete pad is advised. Secure the base to the concrete pad with concrete anchor bolts.

Scrubber Tower Assembly and Installation (Ref picture J8)

- The tower section must be placed in an upright position. Arrows indicate up. Level the packing material inside the tower.
- Mount the mist eliminator section on the packed bed section at flange E. Secure the flange connection with 3/8" bolts, anti seize etc. Be sure the observation ports are aligned.
- Mount the packed bed section (using the crane or fork-lift) on flange E. Secure the flanged connection with 3/8" bolts, anti seize etc.

Scrubber Piping Installation

- The pipelines have been removed for shipping purposes. Inspect flange connections for flange gaskets, bolts and nuts. The gaskets have been taped in place for shipping purposes.

Piping Connections/ Sample Port Connections

Note: All pipe thread connections must have pipe dope applied.

- Connect the Make Up Water Supply Line to the ½" NPT connection. Ref picture J12
- Connect the Wash Line Valve Train as shown in picture J10.
- Connect the Wash Line Flow Indicator as shown in picture J10.
- Connect the Wash Line pipe (1/2" NPT) from the flow indicator to the union on the demister section. Ref. Picture J8
- Install the Packed Tower Flow Indicator to the 2" flanged connection on the scrubber. Ref picture J10. Ref.
- Install the 1 ½" pipe line from the Packed Tower Flow Indicator to the union connection on the Packed Bed Tower. Ref. Picture J8
- Install the Quench Flow Indicator as shown in picture J10.
- Note the valve positions on picture J10. These positions will provide the approximate required flow. (Adjustments are explained in the operating procedures.)
- Connect the Oxidizer Sample Port Line as shown in picture J13. (The sample line is located in the scrubber cabinet.)
- Connect the Scrubber Main Drain/Blow-down (located on the left-hand side of the scrubber cabinet enclosure. Ref. picture J3-F(1)

Emergency Drain

- An emergency trap overflow has been installed inside the sump. Connect the 1½" NPT coupling to a drain line. Ref picture J8 for location.

Chemical Supply

- Install the suction tubing line from the chemical metering pump into the chemical tank or carboy. The chemical tank is not supplied by CCC. Make sure all connections are tight.
- Read and follow instructions in the chemical metering pump manual prior to working with the pump.
- Read and follow all safety instructions and precautions furnished by the chemical supplies company prior to handling any chemicals.

Electrical Connection

- Install electrical power supply to the control panel.
- Install enable/disable interface between oxidizer and scrubber control panels.

Note: Check tightness of **ALL FLANGE FASTENERS** after 2 hours of operation.

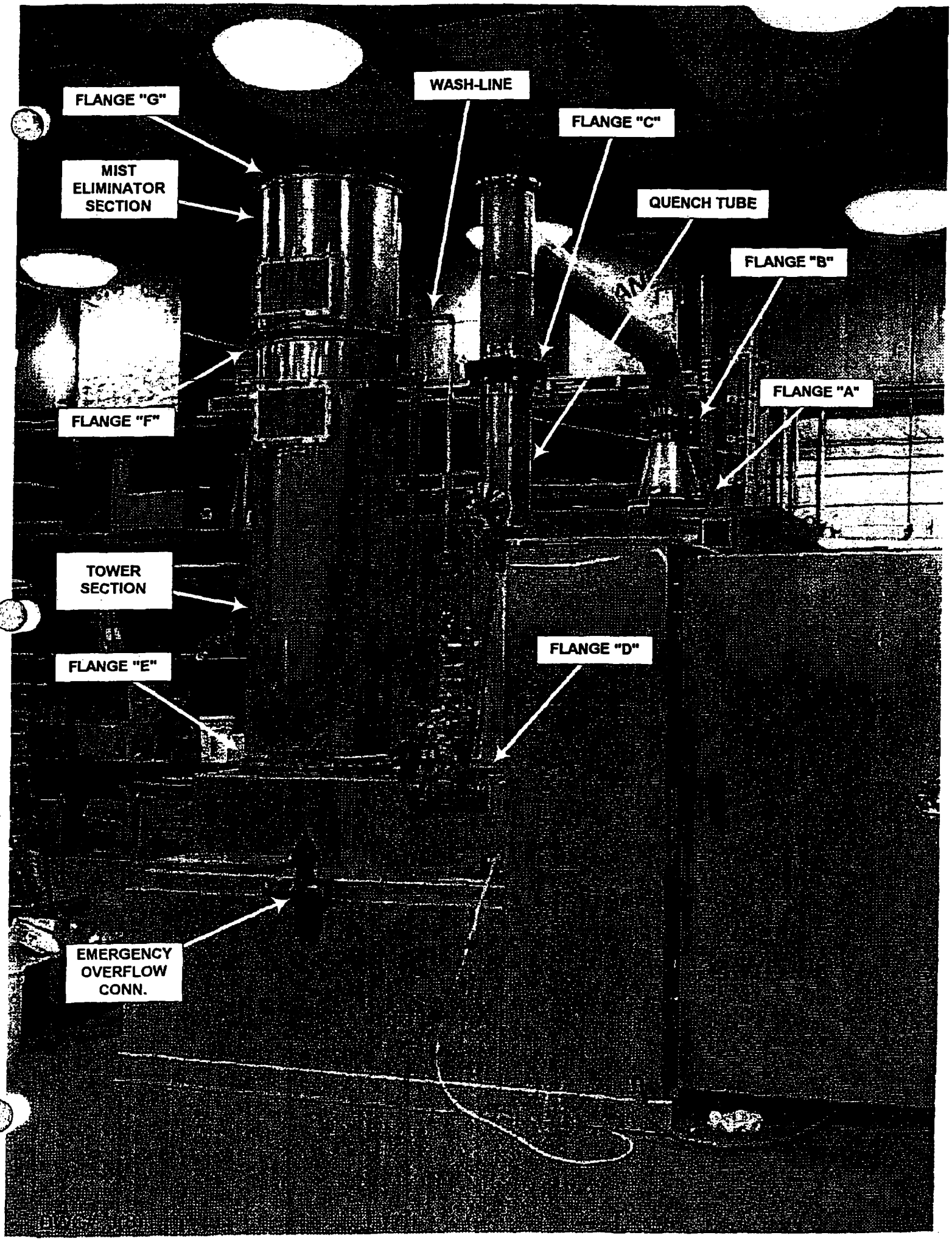
FLANGE "G"
WASH-LINE
FLANGE "C"
MIST ELIMINATOR SECTION
QUENCH TUBE
FLANGE "B"
FLANGE "A"
FLANGE "F"
TOWER SECTION
FLANGE "D"
FLANGE "E"
EMERGENCY OVERFLOW CONN.

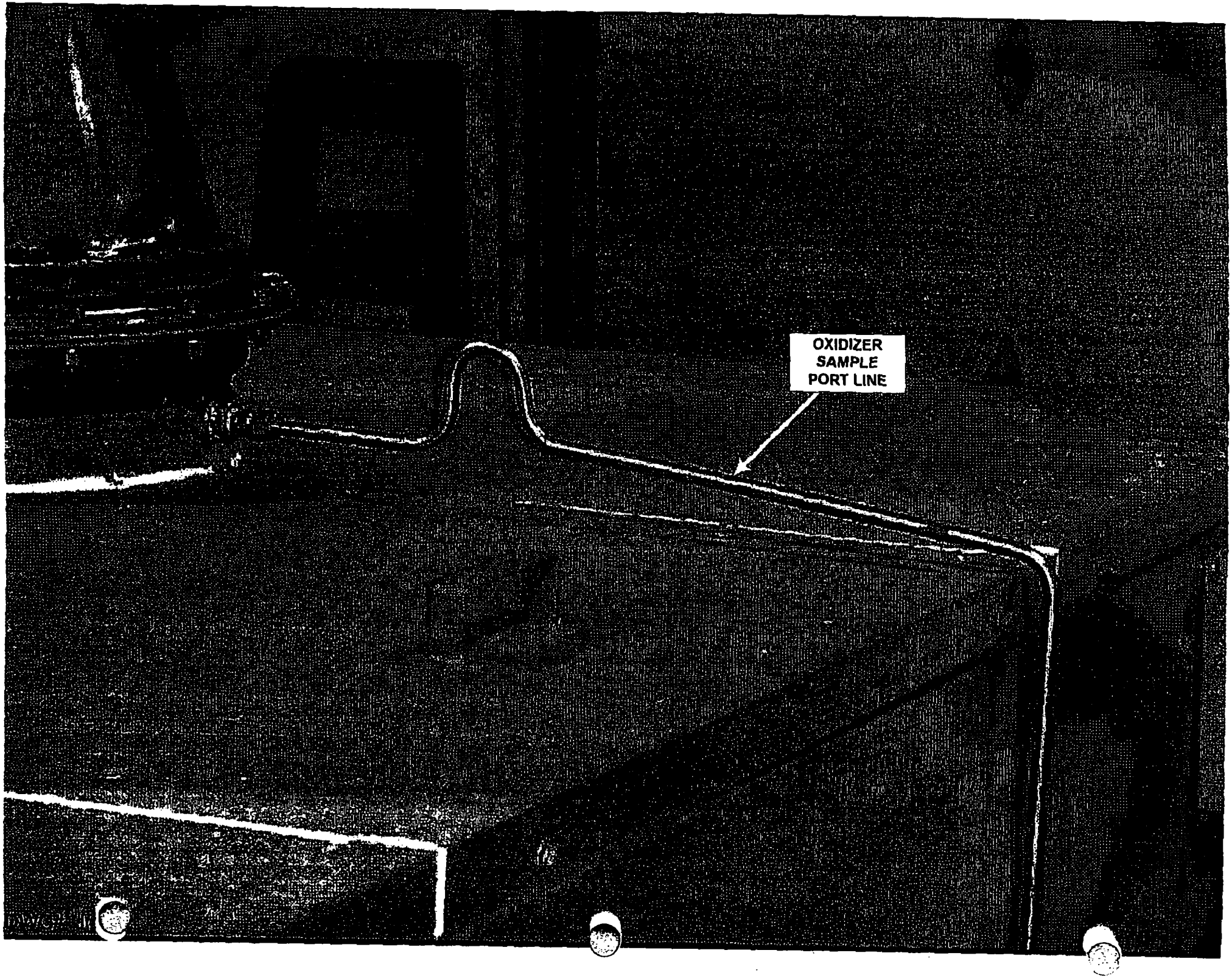
OXIDIZER
SAMPLE
PORT LINE

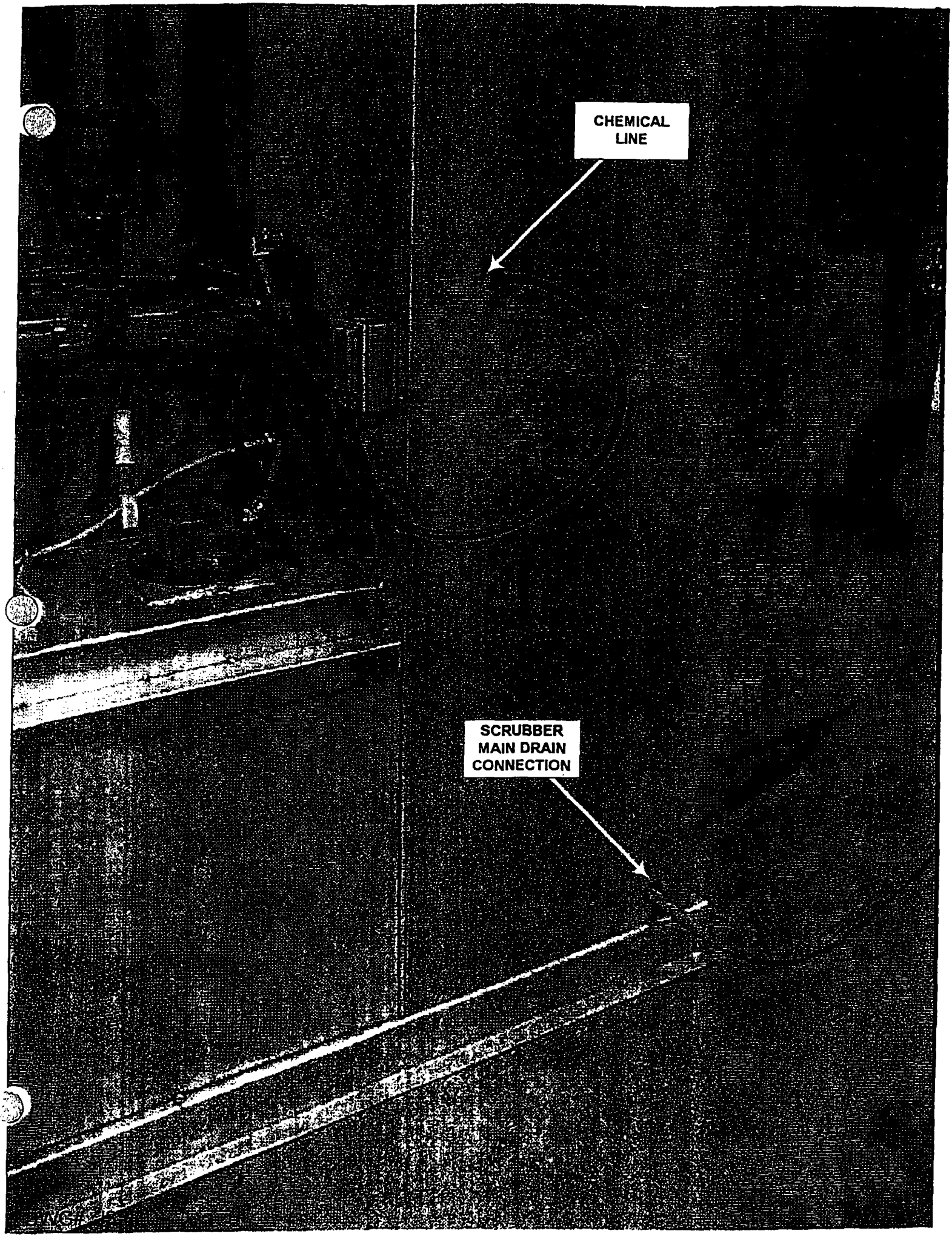
CHEMICAL LINE
SCRUBBER MAIN DRAIN CONNECTION

Equipment Specifications
Self-Recuperative Catalytic Oxidizer
With HCl Scrubber

General

Furnish one (1) Catalytic Combustion Corporation *"HD-SRCO"* Model HD500G catalytic oxidation unit to accept Chlorinated VOC (volatile organic compound) laden process exhaust air. The HD-SRCO system is completely assembled, insulated, steel jacketed, prepiped, prewired, painted and test run at operating flows. It includes an integral, tubular, primary self-recuperative heat exchanger, not less than 50% thermally-efficient, and a process preheater.

Performance Guarantee

When this unit is operated within the design conditions and in accordance with the written instructions furnished and as may be amended, it will achieve in excess of 95% destruction efficiency as measured by Federal EPA Method 25A (hydrogen flame ionization) when operated at the recommended catalyst temperature and in the absence of, but not limited to, the catalyst contaminates listed on Bulletin 2000, exclusive of paraffins <C6.

Sequence of Operation

The VOC-laden exhaust air is drawn from the process through the process blower. It then passes through the counter-cross flow shell side of a primary self-recuperative heat exchanger where it is preheated prior to the process preheater. The preheater raises the VOC mixture temperature prior to entering the oxidation catalyst. As this vapor-laden air mixture passes through the catalyst, an exothermic reaction occurs which is in proportion to the VOC energy concentration. The hot purified mixture of gases are then exposed to another thermocouple before passing through the tube side of the heat exchanger where they preheat the incoming gases. The cooler vapor-free air is then vented to the HCl scrubber and then to atmosphere through the exhaust stack.

Oxidation Unit

All internal process-wetted surfaces of the unit are constructed of AISI T316L stainless steel sheet, tube, plate and structural shapes. The containment housing is constructed of aluminized steel supported internally with structural steel shapes. The inside of this containment housing is insulated with multiple 2" thick layers of 1200°F, 6 lb. density, mineral fiber board insulation with staggered joints. The insulation is impaled on #10 gage steel pins welded to the inside of the housing on 12" centers and retained by steel speed clips. The top has a 6" thickness and an insulating value at ambient temperature of R-24. The sides and bottom have a 4" thickness and an insulating value of R-16.

Structural

The entire unit is mounted on an ASTM A36 trussed structural steel base with forklift pockets on the sides for handling. The process inlet and outlet of the unit, as well as the preheater, have gasketed, steel flanges for mounting and connections.

Self-Recuperative Heat Exchanger

The catalytic oxidizer incorporates an integral self-recuperative, tubular heat exchanger that preheats the cooler incoming process exhaust gases in the multi-tube shell side in a counter-cross flow configuration by lowering the temperature of the hot catalyst discharge gases flowing through a single pass tube side. Both tube sheets are fixed to the housing with differential thermal expansion between the heat exchanger tubes and shell, accommodated by a prestressed full diameter corrugated bellows AISI T321SS expansion joint in the housing shellThe tube rolling depth and rolling torque are controlled in order to insure sheet grip and tube integrity and to prevent tube splitting or exceeding the tensile strength of the tubes. The heat exchanger shall not be less than 50% thermally-efficient.

Process Blower

This is a flat radial (dual-taper) blade wheel, single width and inlet, arrangement #4, centrifugal blower with flanged connections, shaft seal, extended lubrication fittings and includes a 5 HP TEFC, 3600 RPM induction motor rated for cold start-up power requirements. It will bear the AMCA Seal, having been performance tested and certified in accordance, and complies with their Ratings Program Standard #210. This blower will accept multiple sources and overcome the resistance to flow through the complete catalytic system and auxiliary equipment supplied.

Catalyst

The unit is furnished with full face, monolith, oxidation catalyst elements. These elements are fabricated using multiple monolith blocks, contained in AISI T316LSS formed sheet channel frames protected by 3x3 mesh screen faces. The catalyst has a 400 square channel per square inch face structure, an open frontal area >75% and a geometric surface area of 70 square inches per cubic inch. This cordierite substrate is coated with gamma alumina having a BET surface area of approximately 30 square meters per gram and impregnated with platinum catalyst. These elements are assembled, activated, tested and mounted in a gasketed stainless steel frame with studs, clips and nuts, which provides the catalyzed passway for the oxidized gases between the preheat chamber and heat exchanger. Catalyst access is provided through the removable top cover of the unit.

Contaminant:	From SVE
Influent concentration	mixed chlorinated compounds
DRE required:	95%
Process flow:	506 SCFM + 65 SCFM comb. air
Catalyst volume:	2.3 ft^3
Gas hourly space velocity ($GHSV^{-1}$):	14,750
Average catalyst control temperature:	850°F
Maximum catalyst operating temperature:	1050°F
HCl generated:	233 ppmv
Fuel usage:	3.4 Therms/hr
Expected temperature rise	50 degree F.

Preheat Burner

The unit is equipped with a direct gas fuel-fired, nozzle-mixing, 500,000 BTUH primary air burner. This burner utilizes a 1hp combustion air blower. The burner is sized to provide sufficient energy to supplement the heat exchanger energy input and maintain the control temperature at the oxidation catalyst without the energy contribution from oxidation of the combustible vapors. The burner includes a spark ignitor and transformer. Flame supervision is achieved by use of a flame rod and UL®/FM approved flame safety programmer.

Fuel Gas Piping Assembly

The fuel gas piping assembly is prepiped and prewired and meets all requirements as specified in NFPA 79, NFPA 86, National Fuel Gas Code NFPA 54 and is suitable for FM or IRI approval.

Gas piping assembly consists of the following:

- Main shut-off, lubricated plug valve (fuel supply connection)
- Main and pilot fuel gas pressure regulators
- Main fuel safety and blocking shut-off valves
- Pilot safety shut-off valve
- High/Low safety gas pressure switches
- Gas control valve with electrically-operated modulating control actuator
- Leak test cocks and manual ball valves in accordance with NFPA 86
- Indicating pressure gauges with shut-off cocks for incoming gas pressure, main regulated gas pressure, pilot-regulated gas pressure and burner gas pressure
- Flexible gas connection between the fuel gas piping assembly and the burner.

Control Cabinet

A completely assembled and wired, NEMA 4 weather-proof, control cabinet is included and mounted on a structural support at eye level. It includes a door interlocking disconnect switch (suitable for the existing power supply), magnetic multi-pole process blower motor starter with thermal magnetic overloads, a fused control transformer for the 120V-1 Ø, start-up and shut-down timers, control circuit breakers, logic relays, push buttons and pilot lights. It is also equipped with solid state, electronic, digital-indicating PID temperature controllers. One temperature controller controls the output of the preheater from the catalyst entry temperature. The second provides catalyst center temperature control by actuating the dilution air quench valve and the automatic dilution air valve actuator for automatic catalyst exotherm control. The third controller provides a high temperature limit alarm and shutdown. The control cabinet also includes the flame safety programmer with built-in purge timer. All wiring is consistent with standards as set forth in the National Electrical Code.

PLC Controller

The PLC includes a LED display for start-up instructions as well as first-out annunciation. It can be programmed by relay ladder logic (RRL), boulian logic, or stage programming. All inputs are optically isolated. It has (16 Pt) input cards and (8 Pt) isolated relay output cards. Analog input and output cards are available as well as PID loop control cards. Logic includes NO and NC contacts; output set and reset coils; jumps; master sets and resets; step sequencer; nested ladders and outputs. Arithmetic includes additions, subtractions, multiplications, divisions, comparisons and expressions. The PLC uses a NEEPROM cartridge to hold the program indefinitely without power. A battery backed real time clock/calendar is included in the PLC. The PLC is completely wired, programmed and mounted in the control cabinet. A remote enable/disable circuit shall be provided for remote systems.

Additional Controls

Temperature sensing is provided by stainless steel sheathed, type K thermocouples which are mounted and wired with weatherproof heads on the entry and discharge side of the catalyst elements. Mechanical proof of flow through the unit is electrically interlocked through a pressure switch, mounted and wired on the unit.

Crossover between oxidizer and scrubber

The unit includes a 316L stainless steel transition for connection from the catalytic oxidizer exhaust to the inlet of the venturi liquid quench. Supports are provided as required.

Painting

The entire unit will be cleaned and painted with primer and two coats of grey temperature resistant, air dry, alkyd enamel.

Dilution Air Control

Exotherm control includes an assembly installed in the process vapor inlet line on the suction side of the oxidizer process blower. It includes the full port tapered seat dilution control valve, the full port tapered seat process control valve, a NEMA 3R electric reversing proportional motor actuator and linkages. The dilution air is taken through a combination filter silencer with replaceable element and is rated for 100% or nominal system flow. The catalyst center temperature controller (exotherm controller) operates the exotherm control valves to provide 100% fresh air purge and warm-up. When normal operating conditions are achieved, the exotherm controller cycles the actuator to close the dilution air valve and open the process air valve.

Process Flow Indication

An averaging pitot tube type flow sensor is furnished mounted, with a removable compression fitting packing gland, into a fitting welded into the pipe after the exhaust blower outlet. This flow sensor is connected to a differential pressure gauge with neoprene seat and shut-off valve mounted adjacent to the sensor on a pipe mounting kit. This gauge is a diaphragm-actuated dial type 4¾" O.D. with a range compatible to the process blower rating. A dial stem thermometer and pressure gauge are also mounted in the pipe adjacent to the flow sensor, located for convenient viewing, to verify flow density compensation calculations.

Strip Chart Recorder

Programmable, electrically-driven, chart recorder is mounted and wired in the face of the oxidizer control cabinet for convenient viewing. Chart logging for thirty (30) day operation and includes the appropriate chart paper, pens and ribbon for not less than twelve (12) months operation or specified rental or lease period. It also includes a 120 VAC ground fault power supply and a ten (10) year battery backup memory.

Process Flow Recording

Requires the Recorder and Flow Indication options to be functional.

This ancillary subsystem is mounted, piped and wired including a power supply, square root extractor and calibrated differential pressure transmitter. The transmitter is diaphragm operated with an insulated electrode positioned to form a variable capacitance which is detected and converted to a linear DC electrical signal. The electrical signal is internally conditioned to a standard 4-20 mA control loop output. Protected, field adjustable potentiometer zero and span controls are provided and the range is compatible with the flow sensor. Additionally, this transmitter has a cast steel case, stainless steel diaphragm, < ±0.5% of full span output accuracy, a maximum pressure rating of 25" w.c. and is a surface mounted NEMA 4 electrical enclosure.

Venturi Liquid Quench

A. Scope: The Venturi Liquid Quench shall be an integral assembly with the Scrubber. The system shall be capable of reducing the temperature of the oxidizer exhaust gases without experiencing corrosion deterioration.

B. Construction: Standard material of construction is Hastelloy C22. Optional alloys are selected based upon compatibility with the vapor stream.

C. Design Conditions:

Inlet Flow:	1191	ACFM
Outlet Flow:	785	ACFM
Inlet Temperature:	620	°F
Outlet Temperature:	135	°F

Evaporative loss:	0.6	GPM
Recycle rate	10	GPM

HCl Scrubber

A. Scope: The system shall be a self-contained, closed loop, scrubbing system. The system must be capable of operating over the entire performance requirements.

B. Temperature Limits: The scrubbing system shall be capable of withstanding high temperature shock without substantial damage, should the inlet temperature safety controls fail.

C. Construction: The HCl scrubber shall be constructed of *(316SS)*.

D. Sump: The sump section of the scrubber shall be of tank design and shall contain a drain.

E. Inlet: The inlet shall be flanged and located at the top of the quench tube.

F. Design Conditions:

Inlet Flow:	785	ACFM
Inlet Temperature:	135	°F
Outlet Temperature:	135	°F
Recirculation Rate:	20	GPM
HCl Removal:	99%	
NaOH	0.77	lbs/hr
Blowdown:	2.6	gal/hr minimum
H_2O Required:	38.6	gal/hr minimum

Recirculation System

A. Scope: The system shall be a self-contained, liquid recirculation system capable of neutralizing the HCl in the fume stream to acceptable levels.

B. Recirculation Pump: The pump shall be a centrifugal style, constructed of suitable corrosion resistant materials, magnetically driven from a close coupled motor.

C. Chemical Feed System: An automatically controlled chemical feed system for adding caustic solution to the scrubber liquid sump and maintaining a preset pH level of the recirculating liquid shall be provided. The system shall include a pH sensor, pH analyzer/controller with 4-20 mA output and chemical metering pump. The chemical pump shall be a diaphragm type positive displacement metering pump for continuous service. The pumping rate shall be controlled with a 4-20 mA signal from the pH analyzer/controller.

D. Blowdown System: An automatically controlled blow down system to maintain the percentage of solids build-up in the recirculation liquid shall be furnished. The system shall include a conductivity sensor, conductivity analyzer/controller and a solenoid valve to

automatically blow down a portion of the recirculating liquid from the recirculation pump discharge line.

E. Make-up Water System: An automatically controlled solenoid valve shall be furnished to provide fresh water make-up into the scrubber liquid sump. Liquid level is controlled by conductivity sensors inserted into the scrubber sump tank.

Power Requirements

All equipment shall be 460volts, 3 phase, 60 Amp, (30 Amp Installed Load) and will require a 80 Amp Disconnect.

Fabrication

All equipment shall be the standard product of the manufacturer and shall be fabricated in strict accordance with the manufacturer's recommendations.

Shipping

A. The completed system shall be performance tested at the factory prior to shipment. Engineer and owner reserve the right to inspect the system at the factory prior to shipment.

B. The manufacturer will be responsible for shipping the system to the jobsite. Contractor will be responsible for unloading, setting the equipment in place and any field assembly.

Documentation

Three sets of drawings and operations and maintenance manuals are supplied. Drawings include general layout, process and identification (P&ID) and an electrical schematic. Instructions include operating guide, parts list and data sheets, recommended spare parts list, and a list of set-up parameters for all instrumentation.

CATALYST DEACTIVATION & POISONING AGENTS

The following partial list of poisoning agents and inhibitors have been found to have a detrimental effect on the activity of the noble metal catalyst. Catalyst exposure to these substances must be avoided.

SUBSTANCE	EFFECT	REMEDIAL ACTION
1. *Coating Agents* a. rust b. dirt c. inorganic oxide	Covers catalyst active site.	Non-phosphate detergent washing usually effective for removal. Factory reactivation or replacement usually required. Non-phosphate detergent washing may be effective.
2. *Coating Agents - "Glass" Forming Materials* a. organic silicates (esters) b. silicones c. phosphorus containing materials	Covers catalyst active site.	Factory reactivation or replacement usually required. Non-phosphate detergent washing may be effective.
3. *Poisons* Heavy metal complexes (mercury, lead, zinc, tin, arsenic, antimony, etc.)	Permanent catalyst deactivation	Factory reactivation or replacement required.
4. *Sulfides*	Permanent catalyst deactivation	Depending on exposure and sulfide concentration, factory reactivation, non-phosphate detergent washing or replacement is required.
5. *Halogens* a. fluorine b. chlorine c. bromine d. iodine e. halogenated hydrocarbons Note: Does not apply to HD or t-HD catalysts which have been specifically designed to be tolerant of and/or destroy halogenated hydrocarbons, except fluorine.	Covers active site-resulting in temporary or permanent deactivation.	Activity usually returns if exposed to low concentrations and upon removal of halogen source. Prolonged exposure with water (or protons) can corrode, dissolve the catalyst substrate and require repair or replacement.
6. *Organic Droplets and Aerosols*	a. Covers active site b. Possible cause of catalyst hot spot	Such materials may carburize on the catalyst forming a refractory material or become a hot spot source causing substrate deterioration. Factory reactivation or replacement is required.

ITEM	SIZE	DESCRIPTION	~ ELEV. ABOVE GR	RATING
A1	4"	PROCESS AIR (SVE TO CAT-OX)	32"	500 SCFM
A2	8"	PROCESS AIR (CAT-OX TO SCRUBBER)	134"	500 SCFM
B1	–	EXISTING CONTROL PANEL (SVE)	–	–
B2	–	ELECT. POWER SUPPLY (CAT-OX)	72"	480/3/60;
				30 AMPS INSTALLED;
				60 AMP DISCONNECT
B3	–	ELECT. POWER SUPPLY (SCRUBBER)	72"	FROM B2
C	3/4"	NATURAL GAS SUPPLY (CAT-OX)	20"	314 SCFH @ 5 PSIG
D	1/2"	MAKE-UP WATER LINE	54"	40 GPH MINIMUM
E	3/4"	SCRUBBER LIQUID BLOWDOWN LINE	10"	1-10 GPM INTERMITENT
F	–	$NaOH$ SUPPLY TANK	60"	0.77 LBS/HR
G	1 1/4"	DRAIN	8"	–
H	1 1/2"	EMERGENCY OVERFLOW/ DRAIN	32"	–

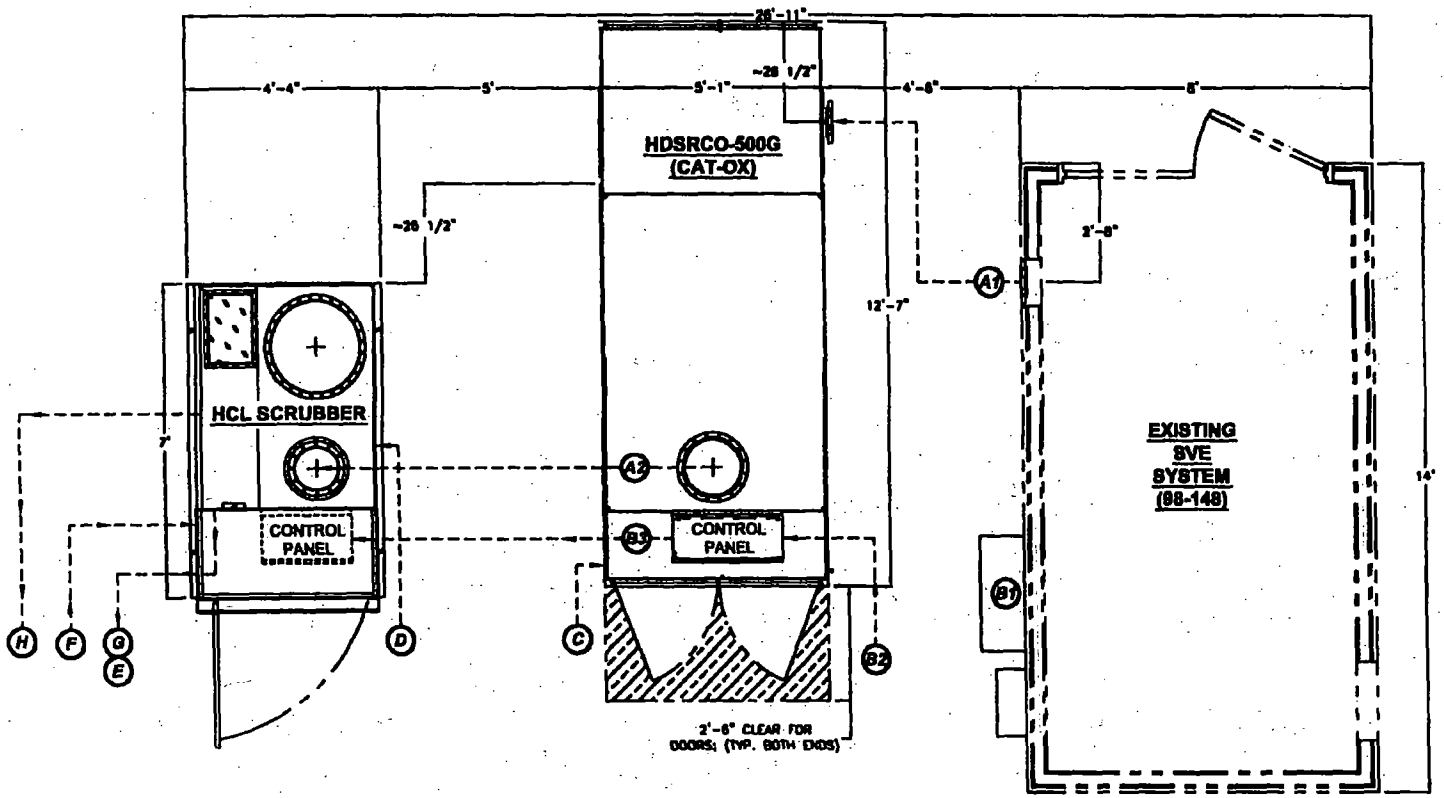

REV	DATE	DESCRIPTION
6	12-03-01	OX LENGTH IS 148"
5	08/09/99	"C" ELEVATION WAS 48"
4	07/19/99	ADDED 6" BETWEEN SCRUB. & CAT-OX
3	07/08/99	ADDED 2' TO AISLEWAYS
2	06/25/99	UPDATED DWG.
1	06/01/99	UPDATED DWG.

NOTE:

THIS DRAWING IS FOR THE PURPOSE OF UTILITY AND PROCESS IDENTIFICATION; CHECK WITH LOCAL CODES FOR ROUTING AND TRENCHING UTILITY LINES.

WEIGHT = N/A

TOLERANCES

DECIMAL ± .03125"
FRACTIONAL ± 1/32"
ANGULAR ± 30'

PROJECT STATUS		DATE	CHECKED BY
X	PRELIMINARY ONLY (SUBJECT TO CHANGE)	07/08/99	
	APPROVED FOR FABRICATION		
	AS-BUILT		
	AS FIELD MODIFIED		

NOTES

CATALYTIC COMBUSTION

SCALE: NTS | DATE: 05/26/99 | DRAWN BY: H.R. | CHK'D BY: G.L. | PROJECT NO.: 99016 | REV: 5

INCH DIM.=X.XX (XX.X)=mm DIM. | DO NOT SCALE THIS DRAWING | DWG. NO. 99016100 | B

CUSTOMER:
LBG
DAYTON THERMAL PROD. PLANT
DAYTON, OHIO

TITLE:
GEN. ARRANGEMENT OF EXISTING SVE, W/ SRCO-500G & SCRUBBER

BILL OF MATERIAL

ITEM	QTY	DESCRIPTION	REF. DWG. #
1	1	LOWER SYSTEM ASSEMBLY	J3-A
2	1	LOWER SCRUBBER ASSY.	J3-B
3	1	UPPER SCRUBBER ASSY.	J3-C
4	1	QUENCH ASSY.	J3-D
5	1	PUMP DOWN PIPING ASSY.	J3-E
6	1	INSULATED ENCLOSURE ASSY.	J3-F
7	1	INSULATED SCUBBER SUMP ASSY.	J3-G
8	1	HCL SCRUBBER BASE ASSY.	G1-B2000
9	1	CROSS-OVER W/ ACCESS PORT ASSY.	J3-H
10			
11	1	CAT-OX ENCLOSURE ASSY.	V500G-430
12	1	CAT-OX BASE ASSY.	V500G-110
13	1	GUARD BED ASS'Y	
14	1	HEAT EXCHANGER ASSY.	V500G-415
15	1	CAT-OX ROOFING ASSY.	V500G-431
16	1	CAT-OX PIPING ARRANGEMENT	V500G-420
17			

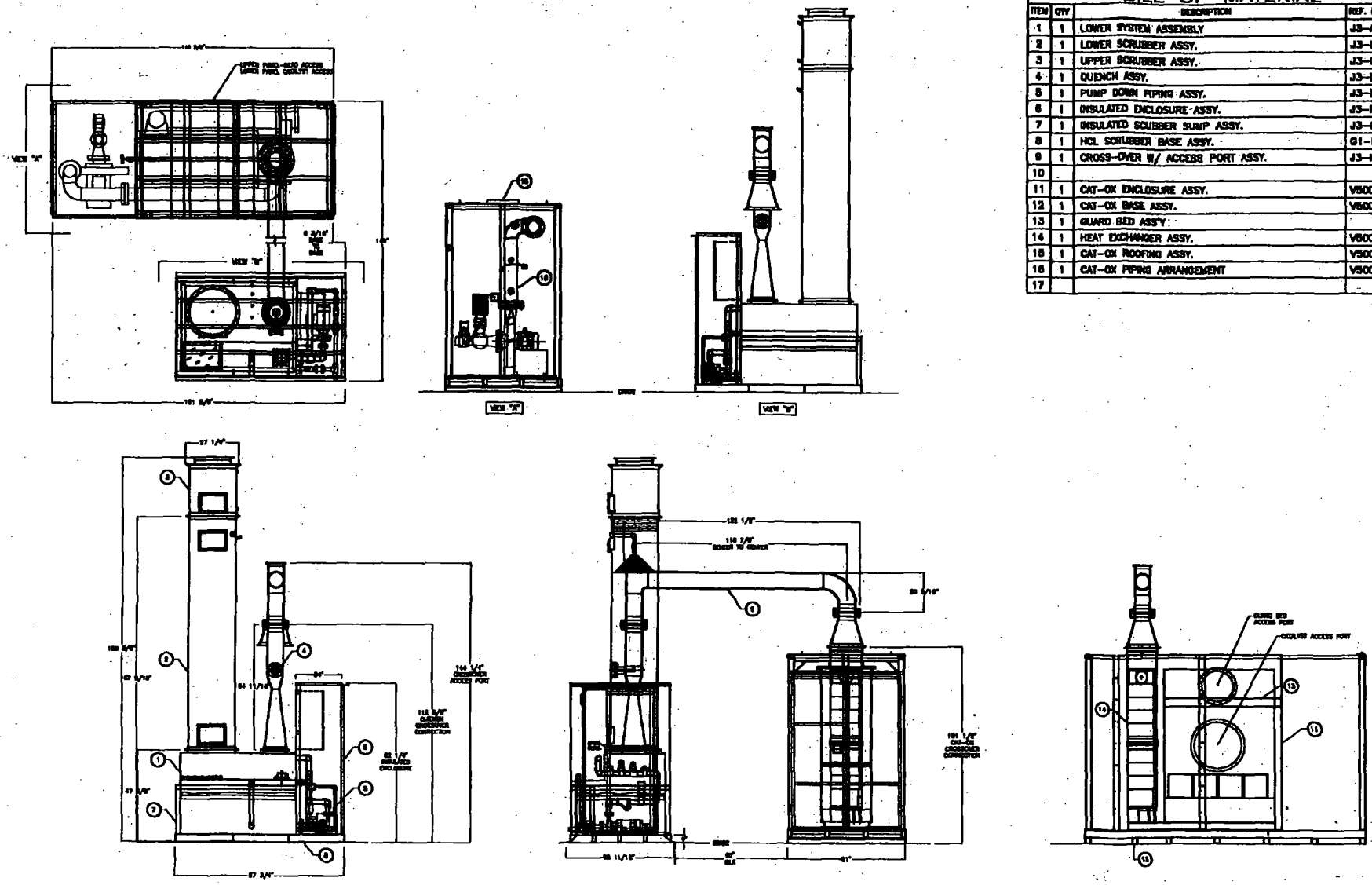

UNLESS OTHERWISE NOTED
AIR PER ASSEMBLY

WEIGHT = N/A
TOLERANCES
GENERAL MACHINING ANGLES ± 1/16" ± 1/8" ± 1/2°

PROJECT STATUS	DATE	CHECKED BY
PRELIMINARY ONLY	07/19/99	
APPROVED FOR FABRICATION		
X AS-BUILT	11-26-01	
AS FIELD MODIFIED		

REV	DATE	DESCRIPTION
1	11-26-01	UPDATE DWG FOR RETROFIT CHGS

NOTES: 1 SYSTEM CHANGES FOR NEW CAT

Anthony Combustion Engineering

CUSTOMER: LBG DAYTON OH SYSTEM RETRO-FIT

TITLE: COMPLETE SYSTEM ASSEMBLY SRCO-V500G & HS-10 SCRUBBER

SCALE 1/8 | DATE 11-26-01 | DRAWN BY RB | DWG DR. G.U. | PROJECT NO. J00-0222 | REV 0

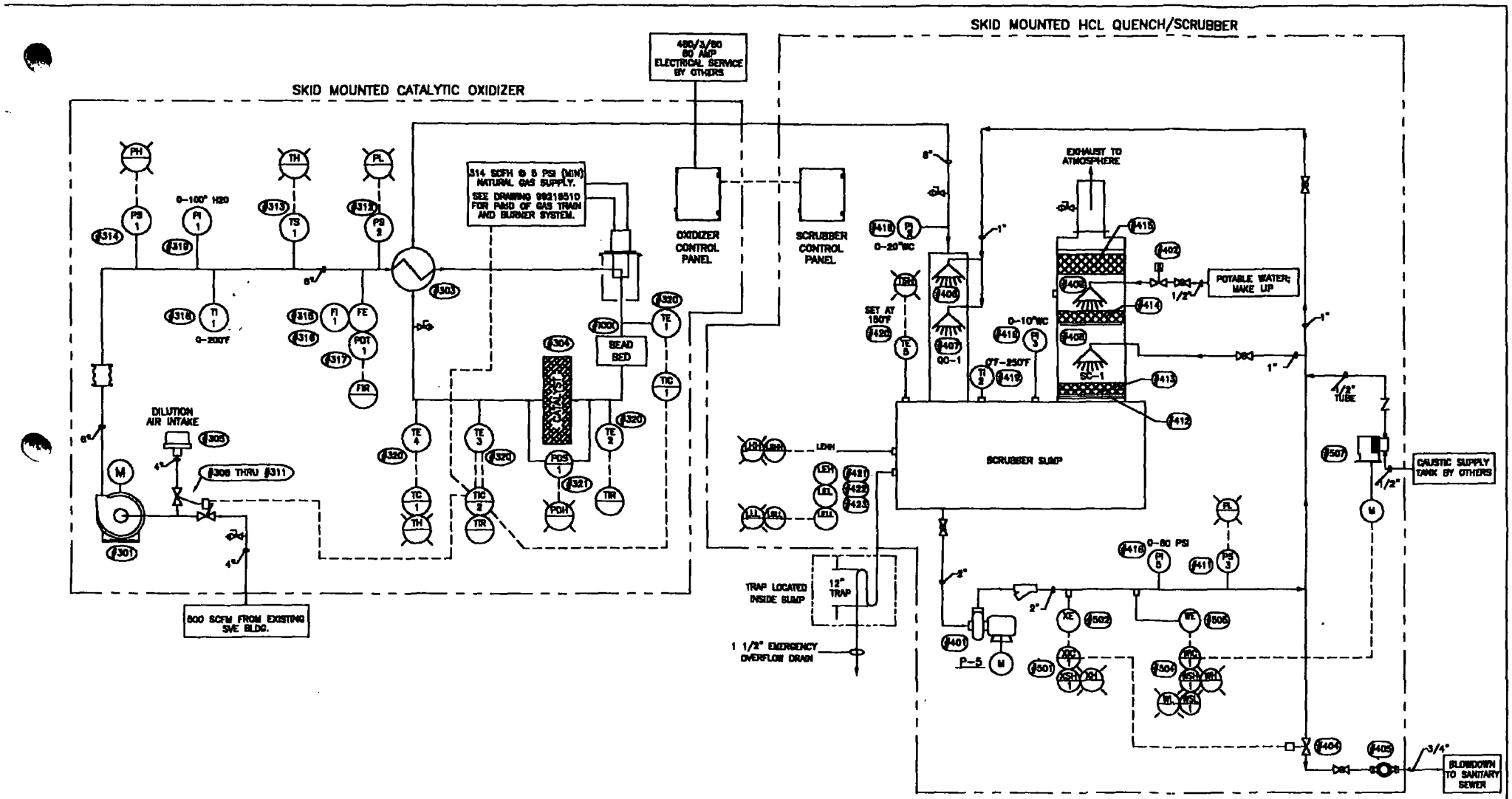

NOTES:

1. SEE DWG. SD232 FOR LEGEND SYMBOLS.
2. (#xxx) = B.O.M. REFERENCE NUMBERS ARE SHOWN ON BILLS OF MATERIAL AND COMPONENT CUT SHEETS.

REV	DATE	DESCRIPTION
B	11-8-01	UP DATED
A	1-7-00	ADD INDICATOR NUMBERS

DESIGNED: LBG
DAYTON THERMAL PROD. PLANT
DAYTON, OH

TITLE: P&ID; HD SRCD 500G CATALYTIC OXIDIZER & HCL SCRUBBER

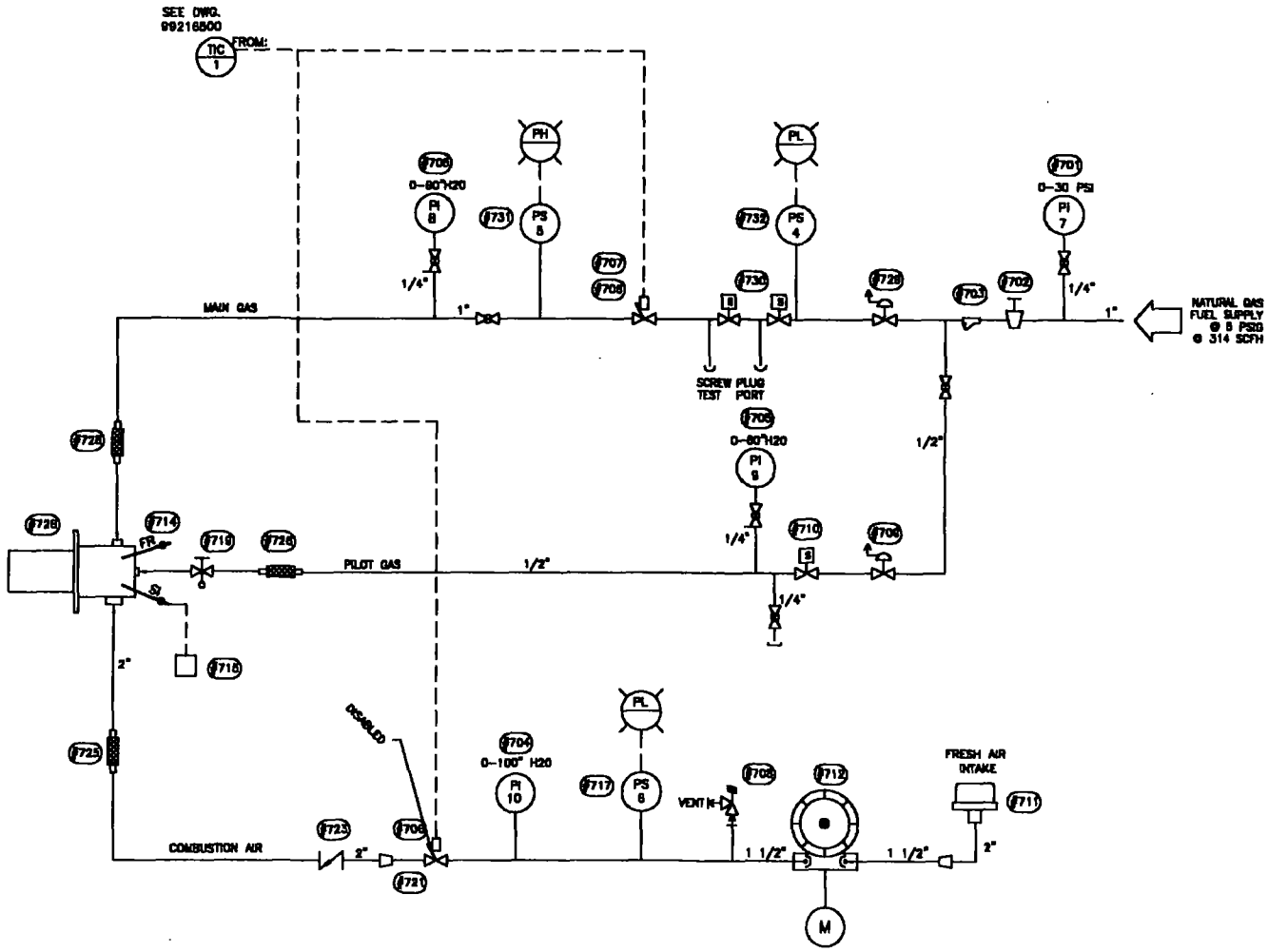

NOTES:

SEE DWG. SD232 FOR LEGEND SYSBOLS.

#XXX = B.O.M. REFERENCE NUMBERS ARE SHOWN ON BILLS OF MATERIAL AND COMPONENT CUT SHEETS.

REV	DATE	DESCRIPTION
2	12-03-01	UPDATE FOR COMBUSTION AIR CONTROL DISABLED
1	1-7-00	ADD INDICATING NUMBERS

CUSTOMER: LBG
DAYTON THERMAL PRODUCTS PLANT
DAYTON, OH

TITLE: P&ID GAS TRAIN
HD SRCO 500G

SCALE: 2.15 | DATE: 06/07/99 | DRAWN BY: MR | CHKD BY: GU | PROJECT NO.: 99-216 | REV: 1

INCH DIM.=X.XX [XX.X]=mm DIM. | DO NOT SCALE THIS DRAWING | DWG. NO. 99216510

Operating Sequence
Gas Fired Catalytic Oxidizer
CCC Project 99-216, LBG Inc.

Control Panel Type:
This section describes the control and indication for a gas fired Catalytic Oxidizer. The unit is integrated with an SVE and Scrubber.

Main Power:
Main power (480V/3PH/60Hz) is provided (by others) to the panel mounted disconnect. This serves as a means of disconnecting the power to the control panel prior to opening the enclosure.

Process Blower:
When the Hand-Off-Auto selector switch is placed in the OFF position, the process blower is disabled.

When the selector switch is placed in the Hand position the process blower will run as long as there is not a motor overload or motor over temperature condition. With the blower in Hand mode the oxidizer is disabled (not in Auto Mode).

When the selector switch is placed in the Auto position, the blower will be enabled if the following conditions are satisfied

- There is not a blower motor overload condition.
- The Scrubber is running.
- The "external disable" contact is satisfied.
- There is not an oxidizer fault condition.

**Note that the process blower is "enabled", but will not actually start until the oxidizer Start button on the operator interface is depressed.

Burner Combustion Air Blower:
When the Hand-Off-Auto selector switch is placed in the OFF position, the combustion air blower is disabled.

When the selector switch is placed in the Hand position the blower will run as long as there is not a motor overload condition. With the blower in Hand mode the oxidizer is disabled (not in Auto Mode).

When the selector switch is placed in the Auto position, the blower will be enabled if the following conditions are satisfied

- There is not a combustion blower motor overload condition.
- The Scrubber is running.
- The "external disable" contact is satisfied.
- There is not an oxidizer fault condition.

**Note that the combustion air blowers operates whenever the process blower is running – they are controlled by the same start relay.

Catalytic Oxidizer Start Sequence:
Oxidizer start-up requires manual setup. **Do not attempt to start the unit without complete understanding and proper training. This document is not a start procedure, it s only meant as an explanation of the automated control system.**

Start/Purge mode
With all pre-start conditions satisfied, all HOA switches in Auto Mode and the Start Button (a function key on the operator interface display panel) is depressed, the system will commence it's **"Purge Mode"**. In purge mode all of the pre-start interlocks are tested, including gas valve proofs of closure, blower operation, and air flow.

Note: If adequate airflow (combustion and process) is not detected the flame safety programmer will not enable, and the system mode will change to "Shut Down".

The oxidizer is then purged for 60 seconds with fresh dilution air. Upon the successful completion of the purge mode the system will attempt ignition. A solid state combustion control device is used for flame detection **(Flame Safety Programmer)**. Once ignition is successful, and a flame is detected the system mode will change to **"pre-heat"**.

Note: If ignition attempt is not successful, or a flame is not detected the flame safety programmer will shut the system down due to a "flame detection failure".

Table 1 – Catalyst temperature control setpoints.

Identifier	Meaning/Location	Value
TA1	Burner up to temp. control relay #1	850° F.
TA2	Cat. center High temp control relay #2	1050°F.
TA3	High limit control relay	1050° F
TE1	Thermocouple @ Catalyst Inlet	-
TE2	Thermocouple @ Catalyst Center	-
TE3	Thermocouple @ Catalyst Exit	-
TOL1	Timeout Limit #1-Burner up to temp	30 min.
TOL2	Timeout Limit #2-Cat low temp	5 min.
TOL3	Timeout Limit #3-Cat Stabilized	6 min.
SP1	Catalyst inlet control Set point	875 Deg. F.
SP2	Exothermic control	950 Deg. F.

Pre-Heat mode

Note: The oxidizer uses the main gas butterfly valve to achieve, and maintain pre-heat. This valve is controlled by a 4-20mA Burner control loop, supplied by a Honeywell UDC3300 (Burner controller). All set points and monitor points refereed to in the following text are defined in table #1, review prior to proceeding.

With all Purge conditions satisfied, and a flame proved at the burner the system will pre-heat to the **catalyst inlet control set point (SP1-875° F)** at **(TE1-Catalyst inlet)**. This is the operating temperature defined to achieve optimal destruction efficiency across the catalyst bed. Once the system is initially started the system must reach the **"burner up to temp"** value **(TA1-850° F)**, prior to the expiration of **(TOL1-30 min.)**. Once this condition is satisfied the system moves into the **"Run Mode"**. If this condition is not satisfied, the system mode will change to **"Shut Down"**.

Run mode (All purge and pre-heat procedures satisfied)

Note: The dilution and process valves are mechanically linked, so that closing the dilution valve opens the process valve, and vice versa. These valves do not act proportionally to one another. The action of these valves is controlled by a 4-20mA exothermic control loop supplied by a Honeywell UDC3300 (Process Controller)

Once thermocouple location **(TE1-Catalyst inlet)** reaches the **"burner up to temp"** value **(TA1-850° F)**, and **(TOL3-6 min.)** is satisfied the exothermic control loop positions the Dilution valve 100% closed, and the process valve 100% open. This process takes approximately 30 seconds to complete. The dilution, and process valves are positioned to keep **(TE2-catalyst center)** below the **"exothermic control"** set point **(SP2-950° F)**.

After a time period defined by the PLC program (Approximately 15 seconds) beginning with the actuation of the process/dilution valves, the **"external enable"** dry contacts are made, which are used to start external blowers.

Once the burner up to temp **(TA1-850° F)** is reached, and **(TOL3-6 min.)** is complete, if the temperature drops below **(TA1-850° F)** for a period greater than **(TOL2-5 min.)** the system mode will change to **"Shut Down"**.

If **(TE2-catalyst center)** reaches, and maintains a value greater than **(TA2-1050° F)** for a period exceeding **(TOL2-5 min.)** the system mode will change to **"Shut Down"**.

An independent **"High Limit Controller"** is utilized to monitor **(TE3-Catalyst Exit)**. If this location exceeds the value **(TA3-1050° F)** the system mode will change to **"Shut Down"**.

Shut Down Modes
There are two types of shut down, the first being **"Normal Shut Down"**. This mode is activated any time the stop key is depressed. The second shut down mode is the **"Alarm Shut Down Mode"**. This mode is activated during any active alarm condition, with the exception of the **"Scrubber Not Running"** alarm. During either of the shut down modes the system immediately closes the process valve, shuts down the burner, and then completes a cool down cycle for a period of **(TOL3-6 min.)**. In the event of a **"Scrubber Not Running"** alarm, the system performs a complete, and immediate shut down of all processes. These processes include the burner, and all blowers for the purpose of protecting the scrubbers' internal components from heat damage.

Chart Recorder:
Inputs for the chart recorder are as defined in Table 2 below.

Table 2 - Chart recorder assignments.

Function	Pen #
Catalyst Inlet Temperature	1
Catalyst Exit Temperature	2
Air Flow (SCFM)	3

Alarm Signals:
Correction of the condition and manual reset of the alarm will be required to enable the system for restart. A text message indicating alarm type will be displayed on the Optimate user interface panel. For detailed Scrubber fault information, refer to Scrubber text message center.

Table 3 – Alarm conditions and associated system response.

Alarm Condition	System Response
Low Gas Pressure	Alarm Shut Down Mode
High Gas Pressure	Alarm Shut Down Mode
CAT High Limit (temperature)	Alarm Shut Down Mode
CAT Center Temperature High	Alarm Shut Down Mode
Flame Safeguard	Alarm Shut Down Mode
Auto Mode Disabled	Alarm Shut Down Mode
External Disable	Alarm Shut Down Mode
Scrubber Not Running	Immediate system shut down
CAT Low Temperature	Alarm Shut Down Mode
Combustion Air Blower OL	Alarm Shut Down Mode
Process Blower OL	Alarm Shut Down Mode
No Process Airflow	Alarm Shut Down Mode
Process High Pressure	Alarm Shut Down Mode
No Combustion Airflow	Alarm Shut Down Mode
(CM100) Gas Leakage Detection	Alarm Shut Down Mode
(CM504) Gas Valve Proving	Alarm Shut Down Mode
CAT Differential Pressure High	Alarm Shut Down Mode
Gas valve proof of closure	Alarm Shut Down Mode

External Interfaces:
The oxidizer control provides for several external interface signals, each is explained below.

Inputs:
External Disable (Dry contact) - it must be closed for the oxidizer to function.
Scrubber Status (Dry contact) - closed indicates scrubber running.

Outputs:
Oxidizer Running (Dry contact) - closed if the oxidizer is running.
External Enable (dry contact) – closed to enable external blowers, or other equipment.

System Stop:
There is a stop button (function key) on the Optimate user interface panel. Depressing this will cause the oxidizer to enter "Normal Shut Down" Mode.

E-STOP:
An illuminated (red) pushbutton is provided for emergency stop conditions. This button is located on the right side of the enclosure. When de-activated (pushed in) the system is disabled.

\\CAT\SHARED FILES\Projects\1999\99-216\Elec\OxidizerLogic.doc

PROJECT NAME:	LBG, Dayton, Ohio	PROJ. ORDER DATE:	
CCC PROJ. N0:	99-216	TARGET SHIP DATE:	
PROJ. MANAGER:	Gary Unke	BOM ISSUE DATE:	

Revision No. **Series 300; Catalytic Oxidizer (SRCO)**

Item No.	Qty	CCC Part #	Description	MFG Part #	Vend. Code
301	1		Blower; New York #2106A, 5 HP, TEFC, 480/3/60, thermal O.L., with teflon hole closure, CWUB, Arrgt. 4		PTI
302	1		Fernco flex connector, 4"		IPC
303	1		Heat Exchanger; By CCC		
304	64		Catalyst; MET-PRO, 8 layers x 8 brick		MPC
305	1		Filter; Dilution air, Solberg #FT-234P-400		CC
306	2		4" Eclipse full port, 75 Deg, 16 BV-ABD Ass'y # 500568		MWN
307	1		Eclipse mounting group # 500928		MWN
308	1		Fernco flex connector, 6"		ICP
309	1		Eclipse control rod 5/16" x 24" Lg. #12730-3		MWN
310	1		Modutrol motor; #M9174B1027 w/ #4074ERU NEMA 4 kit		Honewell
311	1		Interface module Honeywell #Q7230A 1005		Honeywel
312	1		Pressure switch; Dwyer #1950-20		DII
313	1		Thermostat; Vulcan Model #1E1C9		WWG
314	1		Pressure switch; Dwyer #1950-20		DII
315	1		Flow sensor; Dwyer Series DS-300-6"		DII
316	1		Magnehelic gauge; Dwyer Model #2002		DII
317	1		Transmitter; Pressure, Ashcroft #IX5F0242ST2P0IW		SEI

Item No.	Qty	CCC Part #	Description	MFG. Part #	Vend. Code
318	1		Temperature indicator; 0-200, WIKA #9791170		WBC
319	1		Pressure Gauge; 0-100" H2O, WIKA #9851810		WBC
320	3		Thermocouple; dual element, Barber Coleman #M225-60014-2-12		
321	1		Pressure switch; Dwyer #1950-20		DII
322	1		O&M manual for N.Y. Blower, (Item 301)		PTI
323	1		Manual for modutrol motor, (Item 310)		Honeywell
324	1		Manuas for Interface module, (Item 311)		Honeywell
325					
326					
327					
328					
329					
330					
331					
332					
333					
334					
335					

PROJECT NAME:	LBG DAYTON	PROJ. ORDER DATE:	
CCC PROJ. N0:	99-216	TARGET SHIP DATE:	
PROJ. MANAGER:	Gary Unke	BOM ISSUE DATE:	

Rev.

Series 700; Gas Train, Burner & Comb. Air

Item No.	Qty	CCC Part #	Description	MFG Part #	Vend. Code
701	1		Gauge; Pressure, 0-30 PSI, WIKA #9677984		WBC
702	1		Plug valve; 1", lubricated, Walworth #1796		MWN
703	1		1" NPT Wye Strainer		MWN
704	1		Gauge; Pressure, 0-100" H20, WIKA #9851810		WBC
705	2		Gauge; Pressure, 0-60" H20, WIKA #9851704		WBC
706	2		Modutrol motor #M9174B1027, interface Q7230A 1005 & 4074ERU NEMA 4 kit		Honeywell
707	1		Eclipse butterfly valve, 1" NPT, Assy#500378	404 BVA	MWN
708	1		Pressure relief valve, 1 1/2" NPT , 30" to 170" wc	AG258	MMS
709	1		Regulator; Pressure, #043-180, 1/2"x1/2", 0.125 orifice, black spring		MWN
710	1		Solenoid Valve; 1/2", ASCO 8215G20, normally closed, 120 VAC		LEI
711	1		Air Intake Filter Solencer; Stoddard F64-1 1/2		SS
712	1		Blower; Combustion air, ROTRON DR404AL72M,1 HP, TEFC, 460/3/60 motor		PTI
713	1		Burner; 1 1/2" Kinemax Series G, gas only, Maxon #39749 w/ S.S. comb. sleeve & spark ignitor		LPE
714	1		Flame rod kit; Maxon #51427		LPE
715	1		Ignition transformer; Honeywell #Q624A1014 with sleeve #134666-510		Honeywell
716	2		Eclipse Parts mounting group #500928		MWN
717	1		Pressure Switch, Low, Dwyer #1950-20		DII

Item No.	Qty	CCC Part #	Description	MFG. Part #	Vend. Code
718	1		Nozzle body flange gasket (between wall and body flange of burner); Maxon #35643		LPE
719	1		Pilot gas adjustable TEE; Maxon #50530		LPE
720	1		1/8" Test Conn Kit 34137		LPE
721	1		2" Valve; Butterfly, reduced port,aut, EclipseCat.# 8BV-AR, Assy.#501234	8BV-AR	MWN
722	1		Operators parts mounting group; #500928Eclipse		MWN
723	1		2" Check valve; Pokorney w/viton molded flap	3200	PM
724	1		Crank arm; Honeywell #221455A		Honeywell
725	1		2" npt Flex connector, metal hose, SS		EFP
726	1		1/2" NPT Flex connector with s.s. element , carbon steel ends, metal overbraid, 6" to 8" long		EFP
727					
728	1		1" NPT Flex connector with s.s. element , c s ends, metal overbraid, 8" to 12" long		EFP
729	1		FRI 510 gas pressure regulator (with #7 black spring)	D214 407	MWN
730	1		DMV-D 702 Gas Safety Shutoff Valves 1"	D224 843	MWN
731	1		GMH - A2 - 4 - 6; 12" to 60" wc high pressure switch	D217 324	MWN
732	1		GML A2 - 4 - 4: 1" to 20" wc low pressure switch	D217 337	MWN
733	2		1" NPT flange for dmv 702	D222 369	MWN
734	1		Regulator mounting kit	D219 968	MWN
735	2		Valve position indicator	46000-6	MWN

Item No.	Qty	CCC Part #	Description	MFG. Part #	Vend. Code
736	1		Valve proving system (VPS 504)	D221 073	MWN
737	1		CM100 control module	46022	MWN
738	1		CPI 400 Closed position indicator		MWN
739	A/R		Assembly of items 729, 730, 731, 732, 733, 734, 735, 736, 737, 738		MWN
740	1		O&M Manuals for item 706, Modutrol motor		Honeywell
741	1		O&M Manuals for item 708, gast pressure releif valve		MMS
742	1		O&M Manuals for item 709, pressure regulator		MWN
743	1		O&M Manuals for item 712, Rotron Blower 404 series		PTI
744	1		O&M Manuals for item 713, Maxon Kinemax burner 1 1/2, # 39749		LE

CATALYTIC COMBUSTION

PURCHASE ORDER: 16321

TAG:

BOM# 301

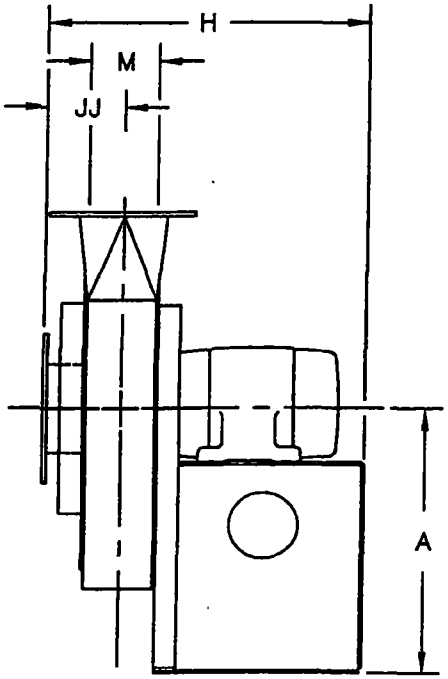

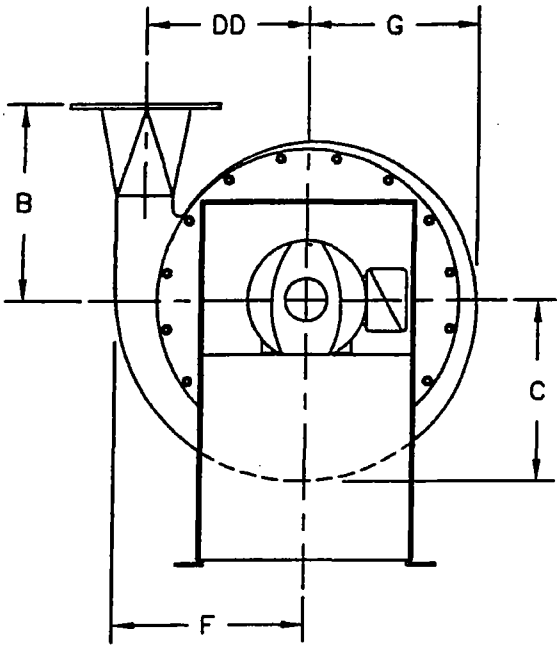

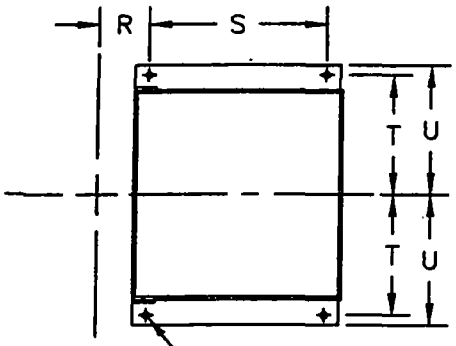

9/16" (14mm) DIA. HOLES

PRESSURE BLOWERS ARE ROTATABLE IN THE FIELD BY 22 1/2° INCREMENTS.

MAXIMUM TEMPERATURE: 180°F (82°C)

FURNISHED WITH FLANGED INLET AND OUTLET WHICH FITS ANSI 150 PIPE FLANGES.

ITEM	DIMENSIONS	
	in	mm
A	24	610
B	17 3/4	451
C	16 1/2	419
F	17 1/2	445
G	15 1/2	394
H	25	635
M	3 7/8	98
R	3 3/8	86
S	14 1/8	359
T	10 7/8	276
U	11 3/4	298
DD	14 7/8	378
JJ	6 1/8	156

FLANGED OUTLET	DIMENSIONS	
	in	mm
I.D.	6	152
B.C.	9 1/2	241
O.D.	11	279
NO. HOLES	8	–
DIA. HOLES	7/8	22

FLANGED INLET	DIMENSIONS	
	in	mm
I.D.	6	–
B.C.	9 1/2	241
O.D.	11	279
NO. HOLES	8	–
DIA. HOLES	7/8	22

TOLERANCE: ±1/8" (±3mm)

nyb The New York Blower Company

7660 Quincy Street, Willowbrook, IL 60521

PRESSURE BLOWER
SIZE 2106 CW UB

Date 06-28-99 Certified CAH

Drawing No. T08796-100-2 Rev. ___

B8T

CATALYTIC COMBUSTION

PURCHASE ORDER : 16321

TAG :

FAN INFORMATION

QUANTITY : 1
FAN TYPE : Pressure Blower - AL
FAN SIZE : 2106A
FAN CLASS : NONE
ROTATION : CW
DISCHARGE : UB
ARRANGEMENT : 4
INLET TYPE : FLANGED

MOTOR INFORMATION

ENCLOSURE : TEFC
HORSEPOWER : 5.0
RPM : 3500
ELECT. DATA : 3-60-230/460
FRAME SIZE : 184T
MOTOR BY : NYB
MOUNT BY : NYB

FAN PERFORMANCE DATA

MAX SAFE SPEED : 3900 RPM at 70 Deg.

CAP	TYPE	CFM	SP	RPM	BHP	TEMP	ALT	DENSITY
1	STD.	0.0	0.00	3500	0.00	70	0.0	0.0750

CERTIFIED DRAWING PACKET*

FAN CERTIFIED DRAWING..... Dwg# T08796-100-2

ADDITIONAL ACCESSORIES

TEFLON SHAFT HOLE CLOSURE

ADDITIONAL NOTES

MOTOR WITH THERMOSTAT

ADDITIONAL INFORMATION

NUMBER OF DRAWING SETS : 3
ESTIMATED SHIPPING WT. : 362 lbs.
(includes fan, motor, & pertinent accessory weights)

* DRAWINGS ARE FOR CONSTRUCTION PURPOSES

HDCOVER

nyb The New York Blower Company
7660 Quincy Street, Willowbrook, IL 60521

Pressure Blower - AL
SIZE 2106A

Date 06/28/99 Certified CAH
Drawing No. T08796-100-1 Rev. ___

nyb | The New York Blower Company®
7660 QUINCY STREET–WILLOWBROOK, ILLINOIS 60521-5596
TEL: (630) 794-5700 • FAX: (630) 794-5776 • WEB: http://www.nyb.com • E-MAIL: nyb@nyb.com

INSTALLATION MAINTENANCE, OPERATING INSTRUCTIONS

IM-140

PRESSURE BLOWERS
TYPE HP PRESSURE BLOWERS

⚠ WARNING

THIS FAN HAS MOVING PARTS THAT CAN CAUSE SERIOUS BODILY INJURY. BEFORE OPERATING OR STARTING MAINTENANCE READ THE INSTALLATION AND MAINTENANCE INSTRUCTIONS AND THE AMCA SAFETY PRACTICES MANUAL PROVIDED WITH THIS FAN.

DURING OPERATION

1. KEEP BODY, HANDS, AND FOREIGN OBJECTS AWAY FROM THE INLET, THE OUTLET, AND THE OTHER MOVING PARTS OF THE FAN SUCH AS SHAFTS, BELTS, AND PULLEYS.

2. DO NOT OPERATE AT EXCESSIVE SPEEDS OR TEMPERATURES.

BEFORE STARTING MAINTENANCE WORK:

LOCK POWER SUPPLY IN OFF POSITION AND IMMOBILIZE FAN WHEEL.

98-0250

A WORD ABOUT SAFETY

The above **WARNING** decal appears on all **nyb** fans. Air moving equipment involves electrical wiring, moving parts, sound, and air velocity or pressure which can create safety hazards if the equipment is not properly installed, operated and maintained. To minimize this danger, follow these instructions as well as the additional instructions and warnings on the equipment itself.

All installers, operators and maintenance personnel should study AMCA Publication 410, "Recommended Safety Practices for Air Moving Devices", which is included as part of every shipment. Additional copies can be obtained by writing to New York Blower Company, 7660 Quincy St., Willowbrook, IL 60521.

ELECTRICAL DISCONNECTS

Every motor driven fan should have an independent disconnect switch to isolate the unit from the electrical supply. It should be near the fan and must be capable of being locked by maintenance personnel while servicing the unit, in accordance with OSHA procedures.

MOVING PARTS

All moving parts must have guards to protect personnel. Safety requirements vary, so the number and type of guards needed to meet company, local and OSHA standards must be determined and specified by the user. Never start a fan without having all safety guards installed. Check regularly for damaged or missing guards and do not operate any fan with guards removed. Fans can also become dangerous because of potential "windmilling", even though all electrical power is disconnected. Always block the rotating assembly before working on any moving parts.

SOUND

Some fans can generate sound that could be hazardous to exposed personnel. It is the responsibility of the system designer and user to determine sound levels of the system, the degree of personnel exposure, and to comply with applicable safety requirements to protect personnel from excessive noise. Consult **nyb** for fan sound power level ratings.

AIR PRESSURE AND SUCTION

In addition to the normal dangers of rotating machinery, fans present another hazard from the suction created at the fan inlet. This suction can draw materials into the fan where they become high velocity projectiles at the outlet. It can also be extremely dangerous to persons in close proximity to the inlet, as the forces involved can overcome the strength of most individuals. Inlets and outlets that are not ducted should be screened to prevent entry and discharge of solid objects.

ACCESS DOORS

⚠ DANGER

DO NOT OPEN UNTIL THE POWER SUPPLY HAS BEEN LOCKED OFF AND THE SHAFT HAS STOPPED ROTATING.
FAILURE TO DO THIS CAN RESULT IN SERIOUS BODILY INJURY. 98-0249

The above DANGER decal is placed on all **nyb** cleanout doors. These doors, as well as access doors to the duct system, should never be opened while the fan is in operation. Serious injury could result from the effects of air pressure or suction.

Bolted doors must have the door nuts or fasteners securely tightened to prevent accidental or unauthorized opening.

RECEIVING AND INSPECTION

The fan and accessories should be inspected on receipt for any shipping damage. Turn the wheel by hand to see that it rotates freely and does not bind. If dampers or shutters are provided, check these accessories for free operation of all moving parts.

F.O.B. factory shipping terms require that the receiver be responsible for inspecting the equipment upon arrival. Note damage or shortages on the Bill of Lading and file any claims for damage or loss in transit. **nyb** will assist the customer as much as possible; however, claims must be originated at the point of delivery.

HANDLING AND STORAGE

Fans should be lifted by the base, mounting supports, or lifting eyes only. Never lift a fan by the wheel, shaft, motor, motor bracket, housing inlet, outlet, or any fan part not designed for lifting. A spreader should always be used to avoid damage.

On a direct drive Arrangement 8 fan, lifting holes are provided in the motor base to assist in handling the fan assembly. These lifting holes should be used in conjunction with the lifting eyes when lifting and positioning the fan onto its foundation. A heavy round steel bar or appropriate fixture can be passed through the lifting holes to simplify attachment of the lifting device. Be sure to follow all local safety codes when moving heavy equipment.

Whenever possible, fans and accessories should be stored in a clean, dry location to prevent rust and corrosion of steel components. If outdoor storage is necessary, protection should be provided. Cover the inlet and outlet to prevent the accumulation of dirt and moisture in the housing. Cover motors with waterproof material. Refer to the bearing section for further storage instructions.

Check shutters for free operation and lubricate moving parts prior to storage. Inspect the stored unit periodically. **Rotate the wheel by hand every two weeks to redistribute grease on internal bearing parts.**

FAN INSTALLATION

nyb wheels are dynamically balanced when fabricated. Complete assembled fans are test run at operating speeds to check the entire assembly for conformance to **nyb** vibration limits. Nevertheless, all units must be adequately supported for smooth operation. **Ductwork or stacks should be independently supported as excess weight may distort the fan housing and cause contact between moving parts.** Where vibration isolators are used, consult the **nyb** certified drawing for proper location and adjustment.

Slab-Mounted Units

A correctly designed and level concrete foundation provides the best means of installing floor-mounted fans. The mass of the base must maintain the fan/driver alignment, absorb normal vibration, and resist lateral loads. The overall dimensions of the concrete base should extend at least six inches beyond the base of the fan. The weight of the slab should be two to three times the weight of the rotating assembly, including the motor. The foundation requires firmly anchored fasteners such as the anchor bolts shown in Figure 1.

Move the fan to the mounting location and lower it over the anchor bolts, leveling the fan with shims around the bolts. Fasten the fan securely. When grout is used, shim the fan at least 3/4-inch from the concrete base. (See Figure 1.) When isolation is used, check the **nyb** certified drawing for installation instructions.

Elevated Units

When an elevated or suspended structural steel platform is used, it must have sufficient bracing to support the unit load and prevent side sway. The platform should be of welded construction to maintain permanent alignment of all members.

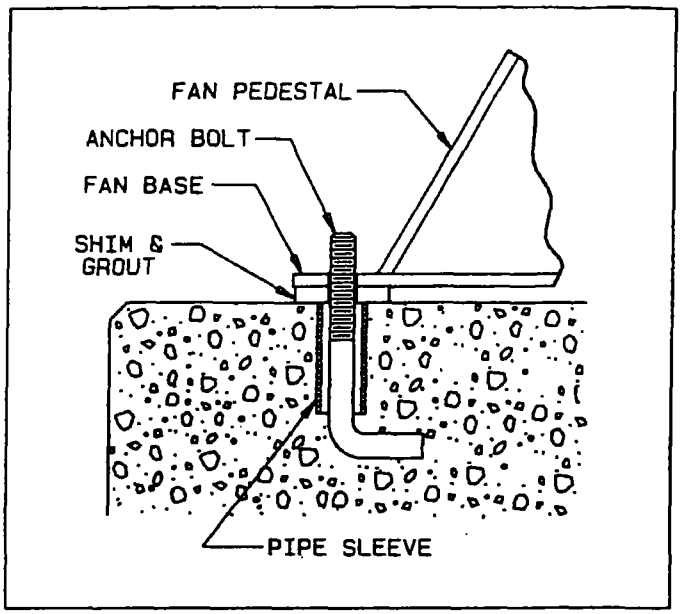

Figure 1

V-BELT DRIVE

Installation

1. Remove all foreign material from the fan and motor shafts. Coat shafts with machine oil for easier mounting. Mount the belt guard backplate at this time if partial installation is required prior to sheave mounting.
2. Mount sheaves on shafts after checking sheave bores and bushings for nicks or burrs. Avoid using force. If resistance is encountered, lightly polish the shaft with emery cloth until the sheave slides on freely. Tighten tapered bushing bolts sequentially so that equal torque is applied to each.
3. Adjust the motor on its base to a position closest to the fan shaft. Install belts by working each one over the sheave grooves until all are in position. Never pry the belts into place. On **nyb** packaged fans, sufficient motor adjustment is provided for easy installation of the proper size belts.
4. Adjust sheaves and the motor shaft angle so that the sheave faces are in the same plane. Check this by placing a straightedge across the face of the sheaves. Any gap between the edge and sheave faces indicates misalignment. Important: This method is only valid when the width of the surface between the belt edge and the sheave face is the same for both sheaves. When they are not equal, or when using adjustable-pitch sheaves, adjust so that all belts have approximately equal tension. Both shafts should be at the right angles to the center belt.

Belt Tensioning

1. Check belt tension with a tensioning gage and adjust using the motor slide base. Excess tension shortens bearing life while insufficient tension shortens belt life, can reduce fan performance and may cause vibration. The lowest allowable tension is that which prevents slippage under full load. Belts may slip during start-up, but slipping should stop as soon as the fan reaches full speed. For more precise tensioning methods, consult the drive manufacturer's literature.
2. Recheck setscrews, rotate the drive by hand and check for rubbing, then complete the installation of the belt guard.

3. Belts tend to stretch somewhat after installation. Recheck tension after several days of operation. Check sheave alignment as well as setscrew and/or bushing bolt tightness.

COUPLING

Coupling alignment should be checked after installation and prior to start up. Alignment is set at the factory, but shipping, handling, and installation can cause misalignment. Also check for proper coupling lubrication. For details on lubrication and for alignment tolerances on the particular coupling supplied, see the manufacturer's installation and maintenance supplement in the shipping envelope.

Installation

Most **nyb** fans are shipped with the coupling installed. In cases where the drive is assembled after shipping, install the coupling as follows:

1. Remove all foreign material from fan and motor shafts and coat with machine oil for easy mounting of coupling halves.
2. Mount the coupling halves on each shaft, setting the gap between the faces specified by the manufacturer. Avoid using force. If mounting difficulty is encountered, lightly polish the shaft with emery cloth until the halves slide on freely.

Alignment

1. Align the coupling to within the manufacturer's limits for parallel and angular misalignment (see Figure 2). A dial indicator or laser can also be used for alignment where greater precision is desired. Adjustments should be made by moving the motor to change shaft angle, and by the use of foot shims to change motor shaft height. Do not move the fan shaft or bearing.
2. When correctly aligned, install the flexible element and tighten all fasteners in the coupling and motor base. Lubricate the coupling if necessary.
3. Recheck alignment and gap after a short period of operation, and recheck the tightness of all fasteners in the coupling assembly.

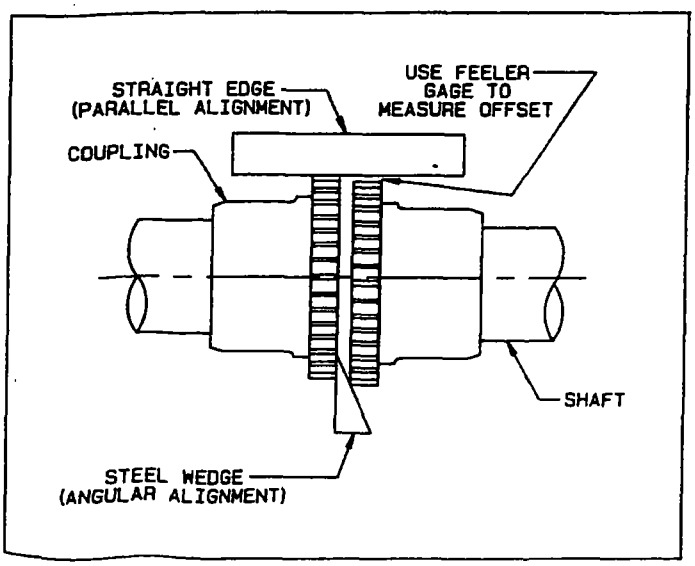

Figure 2

START-UP

Safe operation and maintenance includes the selection and use of appropriate safety accessories for the specific installation. This is the responsibility of the system designer and requires consideration of equipment location and accessibility as well as adjacent components. All safety accessories must be installed properly prior to start-up.

Safe operating speed is a function of system temperature and wheel design. Do not under any circumstances exceed the maximum safe fan speed published in the **nyb** engineering supplement, which is available from your **nyb** field sales representative.

⚠ CAUTION

BEFORE INITIAL OPERATION:

1. **TIGHTEN ALL SET SCREWS IN FAN WHEEL.**
2. **TIGHTEN ALL SET SCREWS IN BEARINGS.**
3. **REPEAT AFTER 8 HOURS OF OPERATION.**
4. **REPEAT AGAIN AFTER TWO WEEKS OPERATION.**

98-0271

Procedure

1. If the drive components are not supplied by **nyb**, verify with the manufacturer that the starting torque is adequate for the speed and inertia of the fan.
2. Inspect the installation prior to starting the fan. Check for any loose items or debris that could be drawn into the fan or dislodged by the fan discharge. Check the interior of the fan as well. Turn the wheel by hand to check for binding.
3. Check drive installation and belt tension.
4. Check the tightness of all setscrews, nuts and bolts. When furnished, tighten hub setscrews with the wheel oriented so that the setscrew is positioned underneath the shaft.
5. Install all remaining safety devices and guards. Verify that the supply voltage is correct and wire the motor. "Bump" the starter to check for proper wheel rotation.
6. Use extreme caution when testing the fan with ducting disconnected. Apply power and check for unusual sounds or excessive vibration. If either exists, see the section on Common Fan Problems. To avoid motor overload, do not run the fan for more than a few seconds if ductwork is not fully installed. On larger fans, normal operating speed may not be obtained without motor overload unless ductwork is attached. Check for correct fan speed and complete installation. Ductwork and guards must be fully installed for safety.
7. Setscrews should be rechecked after a few minutes, eight hours and two weeks of operation (see Tables 1 & 2 for correct tightening torques).

NOTE: Shut the fan down immediately if there is any sudden increase in fan vibration.

SPECIFY ROTATION AS VIEWED FROM DRIVE SIDE

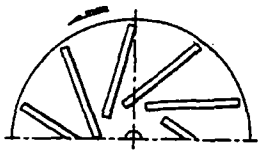

ARROW INDICATES COUNTER CLOCKWISE ROTATION

Arrangement 4
Pressure Blower

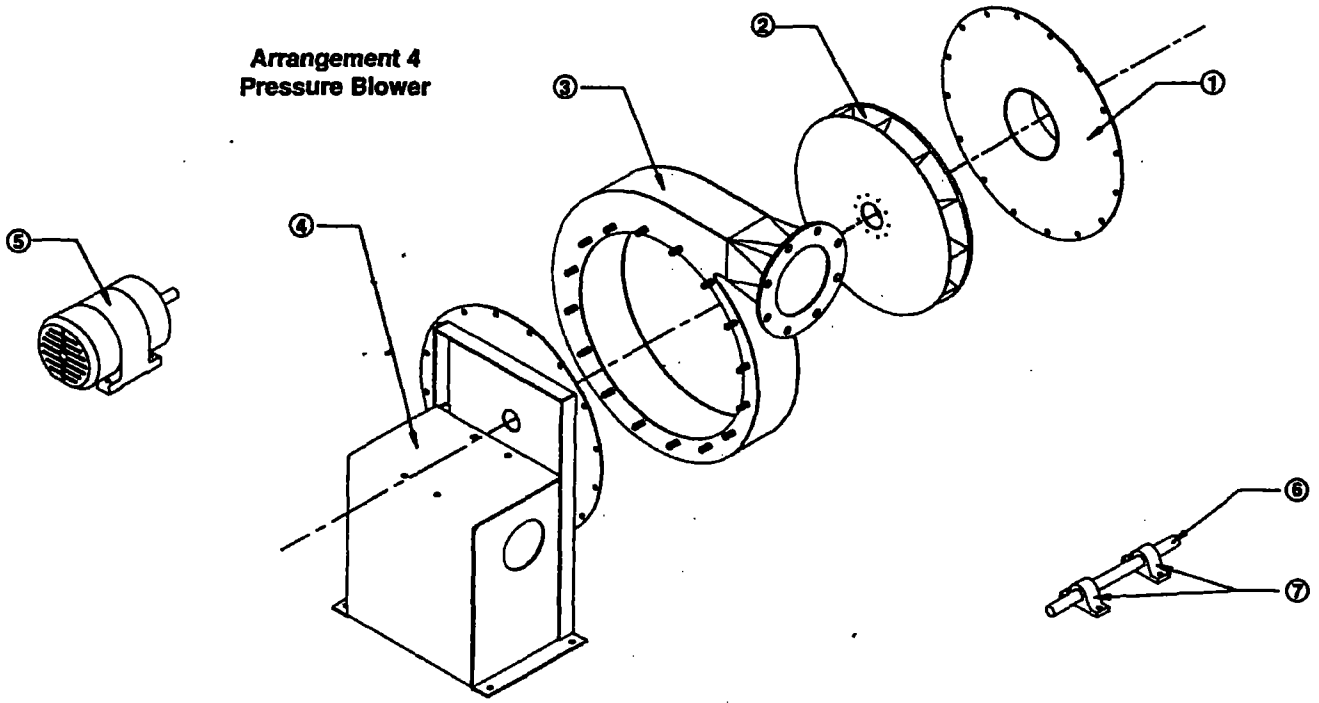

Arrangement 4
Type HP
Pressure Blower

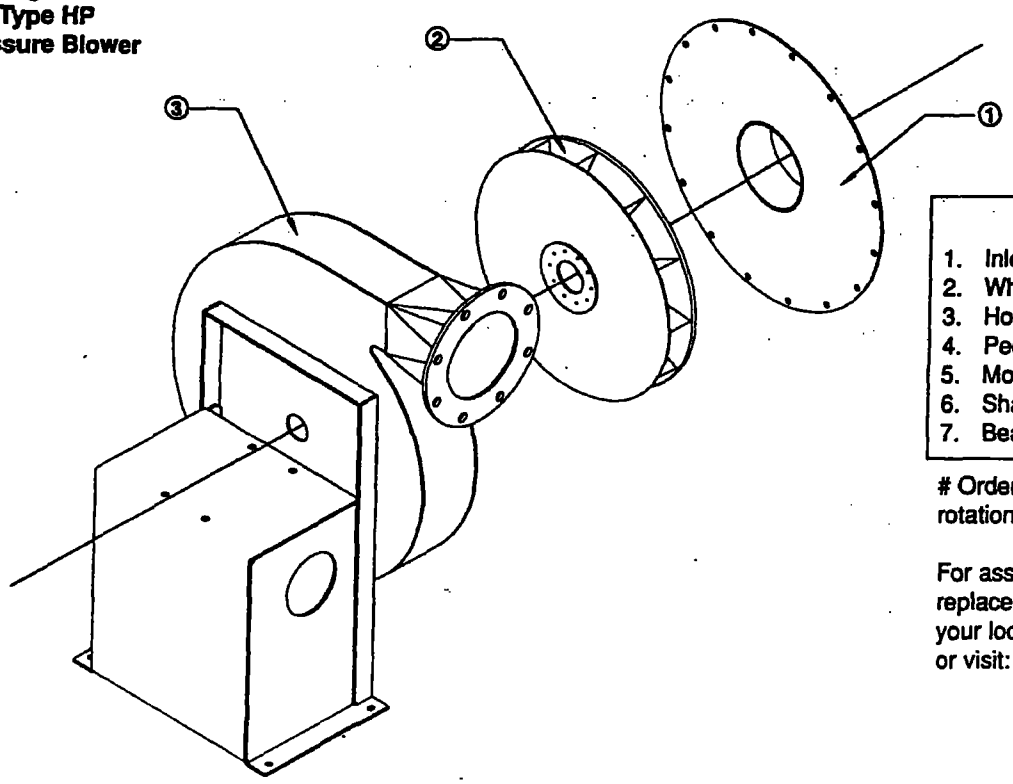

Parts List

1. Inlet Plate Assembly
2. Wheel #
3. Housing #
4. Pedestal Assembly
5. Motor
6. Shaft
7. Bearings

Order for parts must specify rotation.

For assistance in selecting replacement parts, contact your local **nyb** representative or visit: http://www.nyb.com.

Form 0398 GPB 3C Canon
Printed in U.S.A.

Table 1 - WHEEL SETSCREW TORQUES

Setscrew Size Diameter (in.)	Carbon Steel Setscrew Torque*	
	lb.-in.	lb.-ft.
1/2	600	50
5/8	--	97
3/4	--	168

*** Stainless Steel setscrews are not hardened and should not be tightened to more than 1/2 the values shown.**

Table 2 - BEARING SETSCREW TORQUE, lb.-in.

Setscrew Diameter	Manufacturer				
	Link-Belt	Sealmaster	SKF	McGill	Dodge
1/4	90	65	50	85	--
5/16	185	125	165	165	160

Note: Split pillow block bearings are fixed to the shaft with tapered sleeves and generally do not have setscrews.

FAN MAINTENANCE

nyb fans are manufactured to high standards with quality materials and components. Proper maintenance will ensure a long and trouble-free service life.

Do not attempt any maintenance on a fan unless the electrical supply has been completely disconnected and locked. In many cases, a fan can windmill despite removal of all electrical power. The rotating assembly should be blocked securely before attempting maintenance of any kind.

The key to good fan maintenance is regular and systematic inspection of all fan parts. Inspection frequency is determined by the severity of the application and local conditions. Strict adherence to an inspection schedule is essential.

Regular fan maintenance should include the following:

1. Check the fan wheel for any wear or corrosion, as either can cause catastrophic failures. Check also for the build-up of material which can cause unbalance resulting in vibration, bearing wear and serious safety hazards. Clean or replace the wheel as required.
2. Check the V-belt drive for proper alignment and tension (see section on V-belt drives). If belts are worn, replace them as a set, matched to within manufacturer's tolerances. Lubricate the coupling of direct-drive units and check for alignment (see section on couplings).
3. Lubricate the bearings, but do not over lubricate (see the bearing section for detailed specifications).
4. Ceramic-felt shaft seals require no maintenance, although worn seals should be replaced. When lip-type shaft seals are provided, lubricate them with "NEVER-SEEZ" or other anti-seize compound.
5. During any routine maintenance, all setscrews and bolts should be checked for tightness. See the table for correct torques.
6. When installing a new wheel, the proper wheel-to-inlet clearance must be maintained (see Figure 3).

WHEEL BALANCE

Airstreams containing particulate or chemicals can cause abrasion or corrosion of the fan parts. This wear is often uneven and can lead to significant wheel unbalance over time. When such wear is discovered, a decision must be made as to whether to rebalance or replace the wheel.

The soundness of all parts should be determined if the original thickness of components is reduced. Be sure there is no hidden structural damage. The airstream components should also be cleaned to remove any build-up of foreign material. Specialized equipment can be used to rebalance a cleaned wheel that is considered structurally sound.

Balance weights should be rigidly attached at a point that will not interfere with the housing nor disrupt airflow. Remember that centrifugal forces can be extremely high at the outer radius of a fan wheel. Welding is the preferred method of balance weight attachment. Be sure to ground the welder directly to the fan wheel. Otherwise, the welding current could pass through the fan bearings and damage them.

WHEEL-INLET CLEARANCE

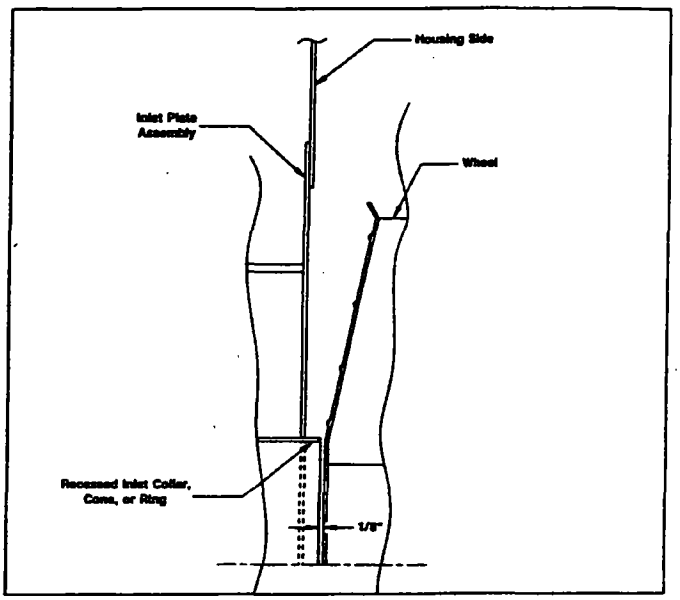

Figure 3

BEARINGS

Storage

Any stored bearing can be damaged by condensation caused by temperature variations. Therefore, **nyb** fan bearings are filled with grease at the factory to exclude air and moisture. Such protection is adequate for shipment and subsequent immediate installation.

For long term or outdoor storage, mounted bearings should be regreased and wrapped with plastic for protection. **Rotate the fan wheel by hand at least every two weeks to redistribute grease on internal bearing parts.** Each month the bearings should be purged with new grease to remove condensation, since even a filled bearing can accumulate moisture. Use caution when purging, as excessive pressure can damage the seals. Rotate the shaft while slowly adding grease.

Operation

Check the setscrew torque before start-up (see table for correct values). Since bearings are completely filled with grease at the factory, they may run at an elevated temperature during initial operation. Surface temperatures may reach 180°F. and grease may bleed from the bearing seals. This is normal and no attempt should be made to replace lost grease. Bearing surface temperatures will decrease when the internal grease quantity reaches a normal operating level. Relubrication should follow the recommended schedule.

06 OUTLET SIZE

Performance shown is for Pressure Blowers with outlet duct and with or without inlet duct.

Outlet area: .20 sq. ft.

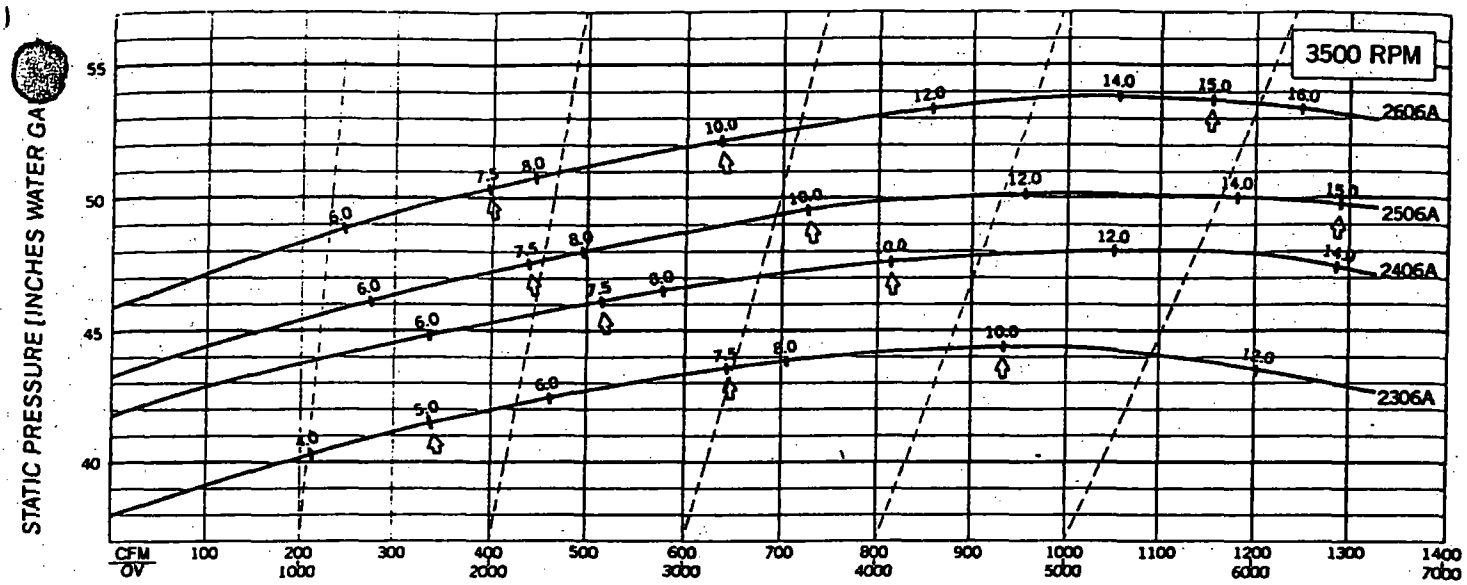

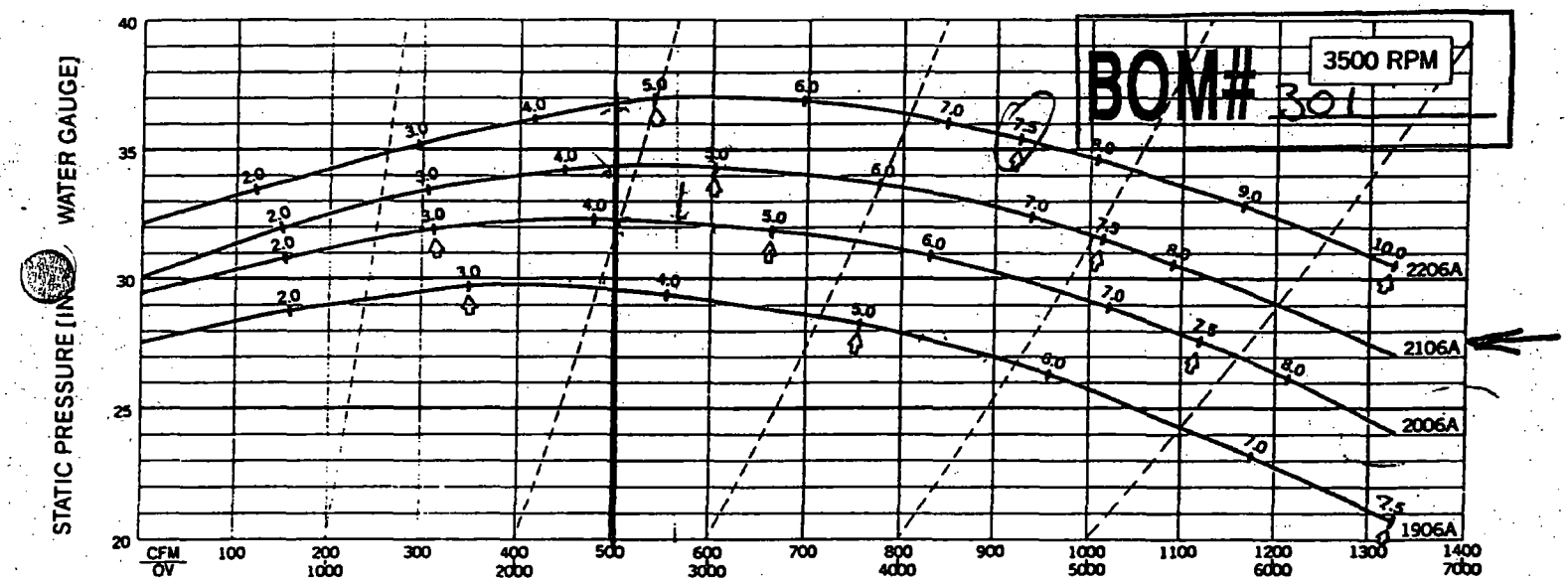

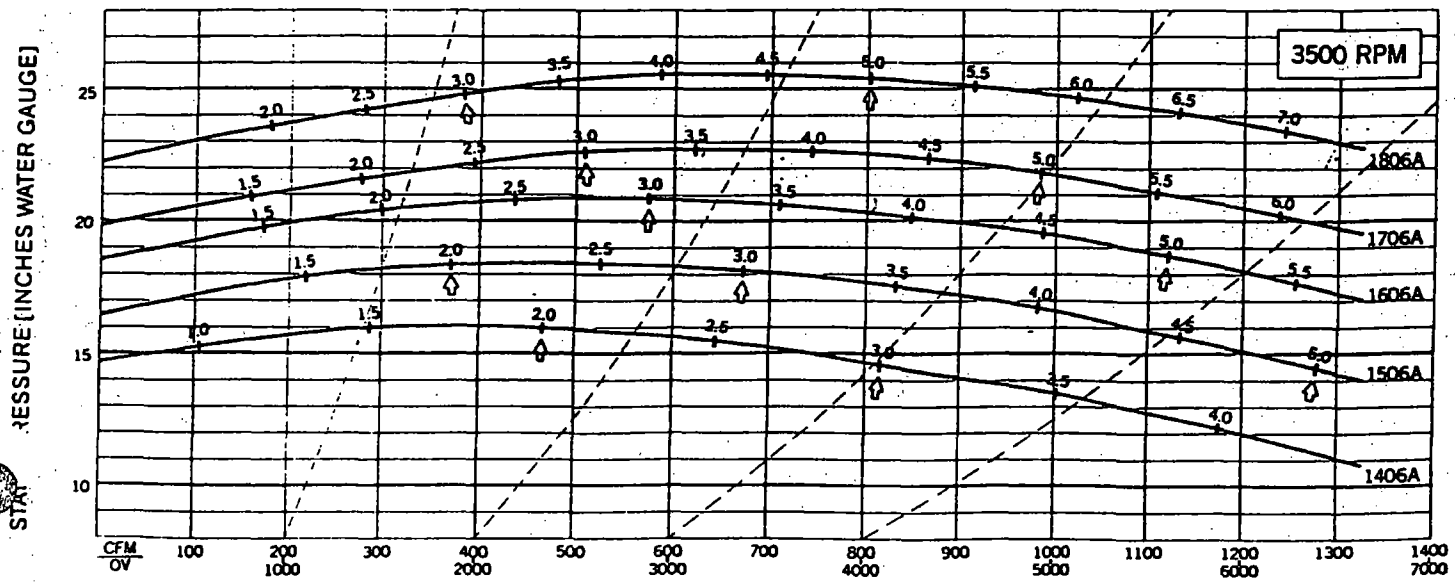

MET PRO CORPORATION **Systems Division**

Bulletin 4040

Oxycat

Oxidation catalysts for air pollution control

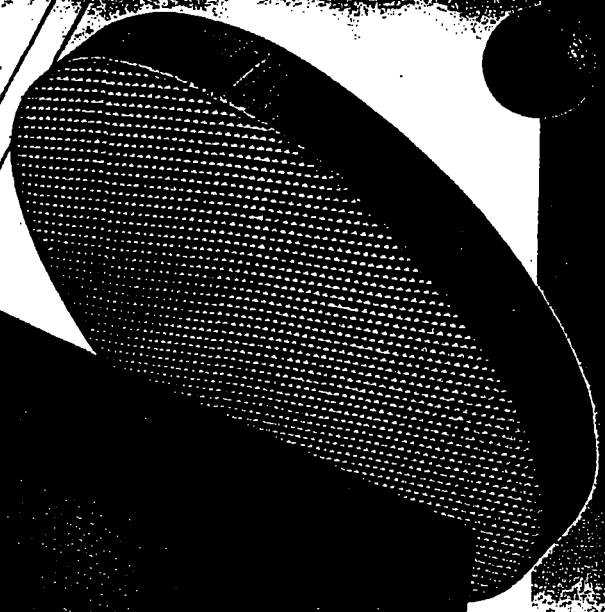

DM# 304

VOC, NOx, CO, hydrocarbon abatement, exhaust gases

High destruction efficiencies, low operating temperatures, and long life

[illegible]

Consider these Oxycat advantages for your requirements

- **HIGH DESTRUCTION EFFICIENCIES** [illegible] performance, help lower operating [illegible] thermal oxidation methods
- **LOW OPERATING TEMPERATURES** — [illegible] compared to traditional catalysts, — help reduce energy [illegible] up to two-thirds
- **UNIFORM BEAD AND PELLET SIZES** permit more even flow distribution through the catalyst bed, reducing pressure drop and enhancing efficiency
- **USEFUL LIFE IS INCREASED** as a result of operating temperatures typically 25% lower than traditional catalysts
- **CONFIGURATION FLEXIBILITY** — Oxycat catalysts — in beads, pellets, or monolithic structures — fit into your existing catalyst program without process or work flow disruption
- **IDEAL FOR MOST AIR POLLUTION CONTROL PROBLEMS** involving emissions of volatile organic compounds (VOCs), halogenated VOCs, and carbon monoxide (CO)

MET PRO CORPORATION **Systems Division**

160 CASSELL RD. • BOX 144 • HARLEYSVILLE, PA 19438 USA • (215) 723-6751 • FAX: (215) 723-6161

CHLORINATED VOC OXIDATION CATALYST WARRANTY

Met-Pro Corporation, Systems Division, with operations at 160 Cassell Road, Harleysville, Pennsylvania, and 891 South Matlack Street, West Chester, Pennsylvania has prepared the following warranty documentation:

1.0 Product Warranty

A. Vendor warrants the VOC Oxidation Catalyst will achieve a 99% Destruction Efficiency.

B. In the event the catalyst fails to perform while under warranty as described in paragraph 1.0 above, Vendor shall replace the non-performing catalyst. The Purchaser agrees to provide field installation.

C. The maximum liability of the Vendor under this warranty shall not exceed the VOC Catalyst purchase price. The Vendor in no event shall be liable for production losses or indirect or consequential damages resulting from failure of the VOC Oxidation Catalyst to meet warranty.

D. The performance warranty period for the catalyst is twenty-four (24) months after start-up.

E. Catalyst performance is specifically contingent upon zero percent (0%) by weight of the following being present in the process exhaust: Phosphorus & Silica. Catalyst performance is also specifically contingent upon none of the following being present in the process exhaust: Bismuth, Lead, Arsenic, Antimony, Mercury, Iron, Tin, and Zinc.

F. Exposure to excessive temperatures significantly reduces catalyst life. Hence, at no time shall the sustained catalyst outlet temperature be permitted to exceed 1100°F.

List Prices August, 1991

BOM# 305

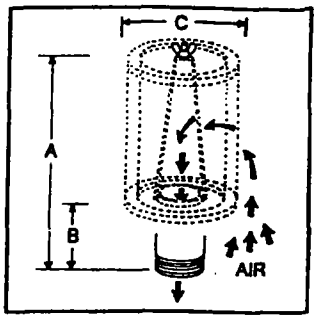

Exposed Element Filters

FT Series - Complete Assemblies
¼" - 6" MPT
4" - 14" Flange

SMI Model Numbers		Effective Surface area of element in square feet		Application CFM		Con-nection	Dimensions			Case Qty.	Unit Price	
Polyester	Paper	Polyester	Paper	Recipro-cating Compres-sors	Blowers Compres-sors Rotary Centrifugal Screw	MPT	A	B	C		With Polyester Element	With Paper Element
1/4" MPT - 6" MPT												
MIN 025	—	.25	—	7	7	¼"	3"	¾"	1¾"	36	$ 8.25	—
MIN 038	—	.25	—	7	7	⅜"	3"	¾"	1¾"	36	$ 8.25	—
FT-15-050	FT-14-050	.5	.9	10	10	½"	4"	1½"	4½"	12	$ 18.10	$ 14.40
FT-15-075	FT-14-075	.5	.9	10	15	¾"	4"	1½"	4½"	12	$ 19.10	$ 15.40
FT-15-100	FT-14-100	.5	.9	20	30	1"	4"	1½"	4½"	12	$ 20.20	$ 16.50
FT-19P-100	FT-18P-100	1.5	3.0	35	35	1"	6½"	1½"	4½"	12	$ 25.70	$ 19.60
FT-19P-125	FT-18P-125	1.5	3.0	60	60	1¼"	6½"	1½"	4½"	12	$ 26.30	$ 20.20
FT-19P-150	FT-18P-150	1.5	3.0	60	80	1½"	6½"	1½"	4½"	12	$ 27.20	$ 21.10
FT-31P-200	FT-30P-200	2.3	5.7	60	135	2"	7¼"	2¼"	6"	12	$ 33.50	$ 27.50
FT-231P-200	FT-230P-200	4.5	10.9	135	135	2"	12½"	2½"	6"	4	$ 75.10	$ 56.20
FT-31P-250	FT-30P-250	2.3	5.7	80	195	2½"	7¼"	2¼"	6"	12	$ 41.50	$ 35.50
FT-231P-250	FT-230P-250	4.5	10.9	195	195	2½"	12½"	2½"	6"	4	$ 83.10	$ 64.20
FT-231P-300	FT-230P-300	4.5	10.9	300	300	3"	13"	3"	6"	4	$ 92.60	$ 73.00
FT-235P-300	FT-234P-300	8.3	22.8	300	300	3"	13"	3"	8"	4	$ 107.70	$ 87.70
FT-245P-300	FT-244P-300	14.0	35.5	300	300	3"	13"	3"	10"	2	$ 179.50	$ 108.50
FT-275P-300	FT-274P-300	19.0	45.4	300	300	3"	13"	3"	12"	1	$ 228.00	$ 174.00
FT-235P-400	FT-234P-400	8.3	22.8	300	520	4"	14"	4"	8"	4	$ 147.20	$ 127.20
FT-245P-400	FT-244P-400	14.0	35.5	450	520	4"	14"	4"	10"	2	$ 179.50	$ 118.00
FT-275P-400	FT-274P-400	19.0	45.4	450	520	4"	14"	4"	12"	1	$ 247.50	$ 183.50
FT-245P-500	FT-244P-500	14.0	35.5	500	800	5"	14"	4"	10"	1	$ 220.80	$ 159.30
FT-275P-500	FT-274P-500	19.0	45.4	650	800	5"	14"	4"	12"	1	$ 247.00	$ 193.00
FT-375P-500	FT-374P-500	28.0	69.1	650	800	5"	20"	4"	12"	1	$ 323.00	$ 253.00
FT-275P-600	FT-274P-600	19.0	45.4	650	1100	6"	15"	5"	12"	1	$ 251.50	$ 197.50
FT-375P-600	FT-374P-600	28.0	69.1	800	1100	6"	21"	5"	12"	1	$ 333.00	$ 263.00
FT-377P-600	FT-376P-600	50.0	125.0	1100	1100	6"	21"	5"	14¾"	1	$ 437.00	$ 337.00
CLASS 150 FLANGED CONNECTIONS												
FT-235P-400F	FT-234P-400F	8.3	22.8	300	520	4"	14"	4"	8"	4	$ 162.20	$ 142.20
FT-245P-400F	FT-244P-400F	14.0	35.5	450	520	4"	14"	4"	10"	2	$ 224.50	$ 163.00
FT-275P-400F	FT-274P-400F	19.0	45.4	450	520	4"	14"	4"	12"	1	$ 282.50	$ 228.50
FT-245P-500F	FT-244P-500F	14.0	35.5	500	800	5"	14"	4"	10"	1	$ 276.80	$ 215.30
FT-275P-500F	FT-274P-500F	19.0	45.4	650	800	5"	14"	4"	12"	1	$ 303.00	$ 249.00
FT-375P-500F	FT-374P-500F	28.0	69.1	650	800	5"	20"	4"	12"	1	$ 379.00	$ 309.00
FT-275P-600F	FT-274P-600F	19.0	45.4	650	1100	6"	15"	5"	12"	1	$ 313.50	$ 259.50
FT-375P-600F	FT-374P-600F	28.0	69.1	800	1100	6"	20"	5"	12"	1	$ 395.00	$ 325.00
FT-377P-600F	FT-376P-600F	50.0	125.0	1100	1100	6"	22"	5"	14¾"	1	$ 499.00	$ 399.00
FT-377P-800F	FT-376P-800F	50.0	125.0	1440	1800	8"	23"	6"	14¾"	1	$ 567.50	$ 467.50
FT-385P-800F	FT-384P-800F	50.0	140.0	1440	1800	8"	23"	6"	19¾"	1	$ 635.00	$ 485.00
FT-485P-800F	FT-484P-800F	75.0	200.0	1800	1800	8"	31"	6"	19¾"	1	$ 710.00	$ 510.00
FT-385P-1000F	FT-384P-1000F	50.0	140.0	1800	3300	10"	23"	6"	19¾"	1	$ 710.00	$ 560.00
FT-485P-1000F	FT-484P-1000F	75.0	200.0	2600	3300	10"	31"	6"	19¾"	1	$ 785.00	$ 585.00
FT-685P-1000F	FT-384P(2)-1000F	100.0	280.0	2880	3300	10"	38"	6"	19¾"	1	$1040.00	$ 864.00
FT-385P-1200F	FT-384P-1200F	50.0	140.0	2600	4700	12"	23"	6"	19¾"	1	$ 785.00	$ 635.00
FT-485P-1200F	FT-484P-1200F	75.0	200.0	2600	4700	12"	31"	6"	19¾"	1	$1040.00	$ 810.00
FT-685P-1200F	FT-384P(2)-1200F*	100.0	280.0	3500	4700	12"	38"	6"	19¾"	1	$1140.00	$ 964.00
FT-485P(2)-1200F*	FT-484P(2)-1200F*	150.0	400.0	4320	4700	12"	53"	6"	19¾"	1	$1480.00	$1000.00
FT-485P(2)-1400F*	FT-484P(2)-1400F*	150.0	400.0	5400	6000	14"	53"	6"	19¾"	1	$1630.00	$1150.00

*Two elements per unit.

SOLBERG Manufacturing, Inc.

1151 West Ardmore Avenue • Itasca, Illinois 60143-1387

1-800-451-0642 • (Illinois 708-773-1363) • Fax 708-773-0727

ECLIPSE BUTTERFLY VALVES

FULL PORT & REDUCED PORT

BOM# 306, 307

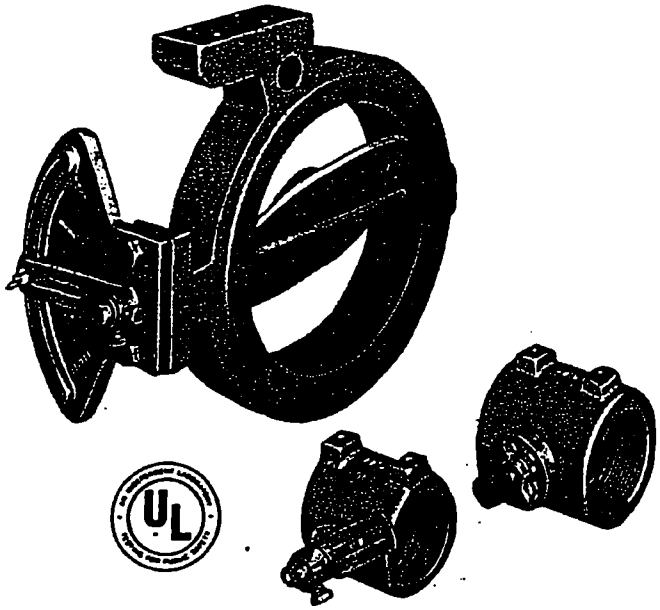

Eclipse Butterfly Valves are designed to control air and gas flow to all types of combustion systems. They should not be used as tight shut-off valves. Valves are available in 3/4" through 8" sizes for either manual or automatic control and in either full port or reduced port construction. All reduced port valves as well as full port manual valves are furnished with beveled discs and offer 75° rotation. Full port automatic valves are available with beveled discs for 75° rotation or with unbeveled discs which rotate 360°.

Bodies of 3/4" through 4" valves are tapped for standard pipe threads. The 6" and 8" valves are wafer type butterfly valves designed to be sandwiched between flanges on the connecting pipes. Valve bodies are constructed of cast iron. Maximum operating pressure of 3/4" through 4" valves is 5 psig. 6" and 8" valves can be used with pressures to 3 psig.

All butterfly valves feature an easy-to-read indicator plate and a slot on the end of the shaft to provide visual indications of the disc position. Manual butterfly valves 4" and smaller in size are adjusted by a control knob. A locking screw secures the shaft at the desired setting. Manual wafer butterfly valves are adjusted by a control arm which can be locked to the indicating plate by a wing nut.

Automatic butterfly valves are furnished with a control arm. Parts groups for attaching most types of electric or pneumatic operators to Eclipse butterfly valves can be ordered separately. Eclipse also stocks a selection of operators which can be ordered by part number. The shaft length of automatic butterfly valves allows the addition of either a second control arm for simultaneous automatic operation in dual valve applications, or a cam for a low fire microswitch arrangement (page 4).

For control of systems using preheated combustion air, see Bulletins M-160 and M-160-1.

CAPACITIES

FULL PORT

PIPE SIZE	FLOW COEFF. (CV) FULL OPEN	CAPACITY CFH - AIR/INCHES W.C. DROP*									
		0.5"	0.75"	1"	1.5"	2"	3"	4"	5"	6"	8"
3/4"	14	425	520	600	730	850	1,030	1,200	1,340	1,460	1,700
1"	48	1,500	1,845	2,130	2,610	3,000	3,690	4,245	4,740	5,190	6,000
1-1/4"	107	3,350	4,130	4,740	5,800	6,700	8,200	9,400	10,500	11,500	13,400
1-1/2"	129	4,000	4,920	5,680	6,960	8,000	9,840	11,320	12,640	13,840	16,000
2"	340	10,600	13,000	15,000	18,300	21,200	25,800	29,700	33,100	36,200	42,400
2-1/2"	438	13,550	16,600	19,200	23,400	27,100	33,000	38,200	42,600	46,600	54,200
3"	695	21,500	26,500	30,700	37,400	43,000	53,000	60,900	68,000	74,400	86,000
4"	1500	47,000	57,000	66,000	80,000	94,000	114,000	132,000	147,000	160,000	188,000
6"	2600	79,900	97,900	113,000	138,400	159,800	195,800	226,000	252,700	276,800	319,700
8"	4200	129,100	158,100	182,600	223,600	258,200	316,200	365,100	408,200	447,200	516,400

REDUCED PORT

PIPE SIZE	FLOW COEFF. (CV) FULL OPEN	CAPACITY CFH - AIR/INCHES W.C. DROP*									
		0.5"	0.75"	1"	1.5"	2"	3"	4"	5"	6"	8"
1"	17.0	410	520	600	725	840	1,025	1,175	1,325	1,450	1,675
1-1/4"	21.5	615	775	900	1,075	1,250	1,525	1,750	1,975	2,150	2,500
1-1/2"	36.0	900	1,100	1,250	1,550	1,800	2,200	2,550	2,850	3,100	3,600
2"	67.0	1,800	2,200	2,500	3,100	3,550	4,150	5,000	5,600	6,100	7,000
2-1/2"	87.0	2,600	3,200	3,700	4,500	5,100	6,400	7,400	8,200	9,000	10,500
3"	170.5	4,800	5,900	6,800	8,200	9,500	11,500	13,500	15,000	16,500	19,000
4"	274.5	8,800	10,750	12,000	15,000	17,000	21,000	24,000	27,000	29,500	34,000
6"	553.0	17,000	20,800	24,000	29,400	34,000	41,600	48,100	53,800	58,900	68,000
8"	721.5	22,200	27,200	31,400	38,400	44,400	54,300	62,700	70,100	76,800	88,700

*When using gases other than air — Apply multifactor to capacities given above.

Gas - Sp. Gr.	Natural - .6	Propane - 1.5	Butane - 2.0
Multifactor	1.29	.81	.70

DIMENSIONS

MANUAL
3/4"—4"

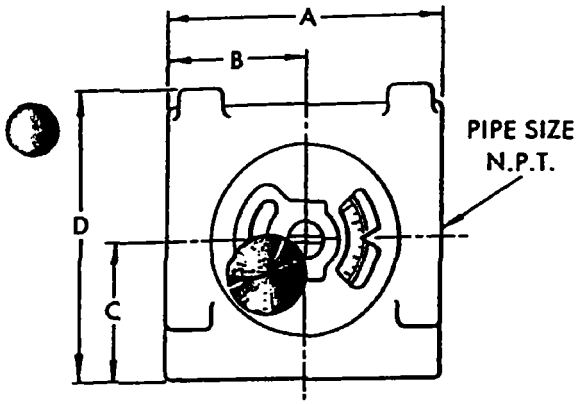

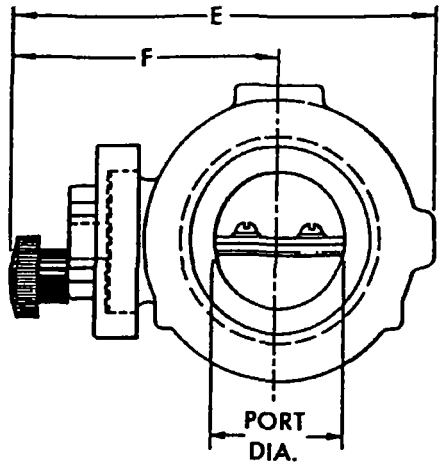

AUTOMATIC
3/4"—4"

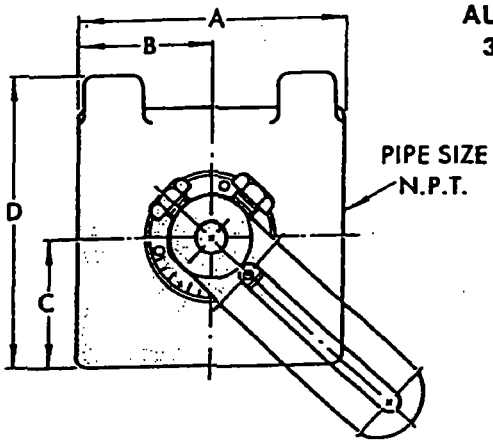

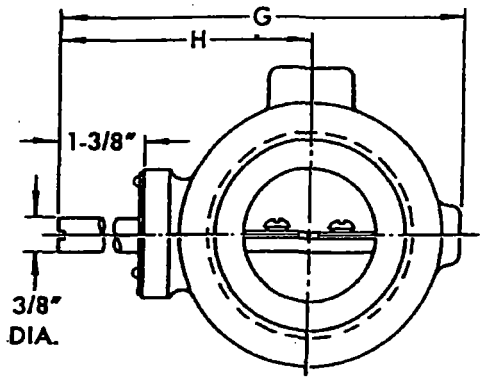

MANUAL & AUTOMATIC
6" & 8"

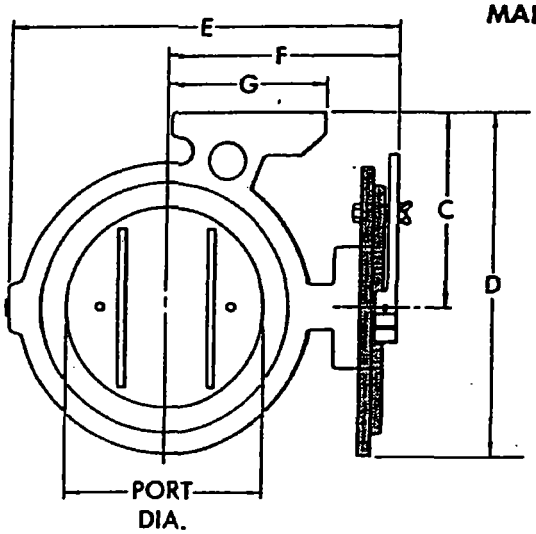

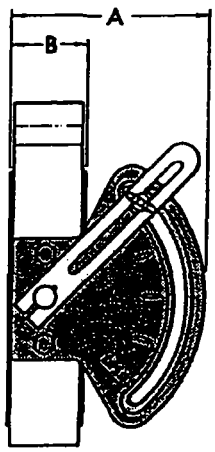

NOTE: Included on "Manual Valve" only.

PIPE SIZE N.P.T.	DIMENSIONS — IN INCHES								PORT DIA. IN INCHES		APPROX. SHIP. WT. IN LBS.
	A	B	C	D	E	F	G	H	FULL PORT	REDUCED PORT	
3/4"	2-7/8	1-7/16	13/16	2	3-5/16	2-5/16	3-19/32	2-19/32	.837	—	2
1"	2-7/8	1-7/16	15/16	2-1/4	3-5/8	2-1/2	3-29/32	2-25/32	1.140	.832	2
1-1/4"	3-1/8	1-9/16	1-3/32	2-19/32	3-15/16	2-5/8	4-7/32	2-29/32	1.484	.983	2-1/2
-1/2"	3-1/8	1-9/16	1-7/32	2-27/32	4-3/16	2-3/4	4-15/32	3-1/32	1.718	1.140	2-3/4
-"	3-1/8	1-9/16	1-17/32	3-15/32	4-13/16	3-1/16	5-3/32	3-11/32	2.208	1.489	3-3/4
2-1/2"	3-7/8	1-15/16	1-7/8	4-1/8	5-7/16	3-7/16	5-23/32	3-23/32	2.614	1.723	6-1/2
3"	3-7/8	1-15/16	2-1/8	4-5/8	5-15/16	3-11/16	5-7/32	3-31/32	3.239	2.208	7
4"	5	2-1/2	2-5/8	5-11/16	7	4-13/16	7-9/32	4-15/32	4.235	2.800	12
6"	6-3/8	2-1/4	5-13/16	10-1/8	11-3/8	3-13/16	4-5/8	—	6.000	4.250	27-1/2
8"	6-3/8	2-1/4	7	12-15/32	13-13/16	8-1/8	5-1/8	—	8.000	5.125	35-1/2

SWIVEL CONNECTORS

FOR 5/16" DIA. CONTROL RODS

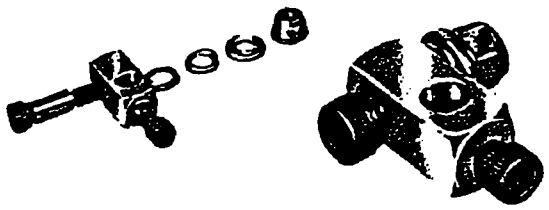

Assembly Number 500558 is a rotating swivel block connector for joining control rod to control arm. It allows 360° rotation.

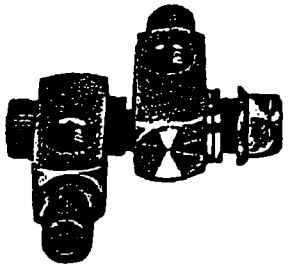

Assembly Number 500569 serves to connect two control rods to one control arm and also allows 360° rotation.

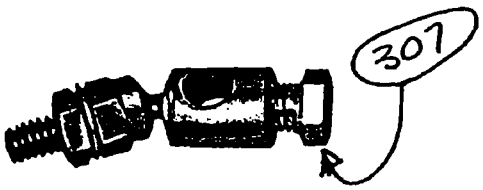

Part Number 14316 swivel connector allows 360° rotation. It provides a 20° flex from the swivel center line to accommodate an angular approach of a linkage control rod, but immediacy of response is less positive than Part Number 14264 (at right).

Part Number 14264 is a non-flexing swivel connector that allows 360° rotation around swivel center line. It provides a more positive positioning and immediacy of response than Part Number 14316 (at left).

FOR 1/2" DIA. CONTROL RODS

Swivel block, Assembly Number 500542, rotates 360°.

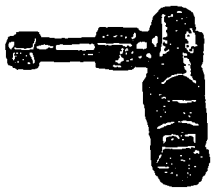

Single ball swivel, Assembly Number 500543, permits angular approach of rod toward control arm. Rotates 360°.

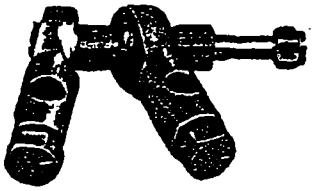

Double ball swivel, Assembly Number 500544, connects two rods to one control arm. Allows angular approach of rod to arm, rotates 360°.

CAM & MICRO SWITCH

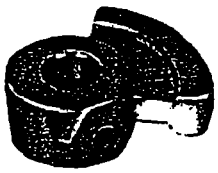

Brass cam for butterfly valve shafts. Part Number 01631-1 fits 3/8" shaft; part number 01632-1 fits 1/2" shaft.

This micro switch is a CON item for use with cam to prove low fire in combustion systems.

OPERATOR MOUNTING PLATES/BRACKETS

Part Number 13095 fits most Honeywell, Barber-Colman, Penn, and L&N 10211 through 10218 electric control motors.

Assembly Number 500228 is a mounting bracket for Barber-Colman pneumatic, thrust model operators.

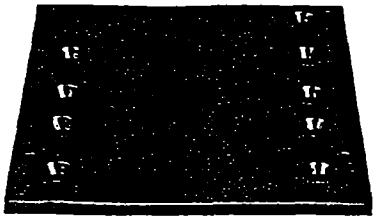

Part Number 12758 mounts on Part Number 13095 for installation of either a Honeywell model M630 or M930 "Actionator" control motor.

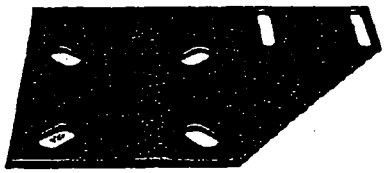

Part Number 10689 is for mounting the Honeywell lever type pneumatic operator. It also accommodates Fischer 658 operator.

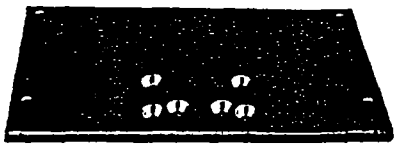

Part Number 10869-1 is for L&N control motor series 10260 through 10268 (electrically operated).

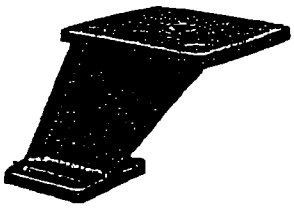

Part Number 03394 is for the Honeywell thrust model actuator.

BUTTERFLY VALVE CONTROL ARMS

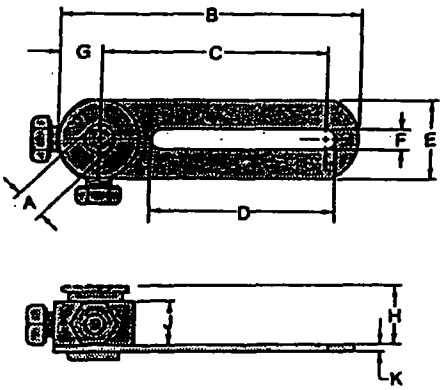

ASSY. NO.	A	B	C	D	E	F	G	H	J	K
500527*	3/8"	3-3/4"	2-7/8"	2-3/8"	1"	9/32"	9/16"	1 1/16"	9/16"	1/8"
500528†										
500534††	3/8"	4-13/16"	3-7/8"	2-3/4"	1-1/8"					
500535††	1/2"									
500536††	5/8"									
500538††	3/8"	5-9/16"	4-5/8"							
500539††	1/2"									
500537††	5/8"									
500541-1	1/2"	6"	4-7/8"	3"	1-1/2"	3/8"	3/4"	—	1"	1/4"
500541-2	5/8"									
500541-3	3/4"									

* Control Arm Assembly No. 500527 is furnished standard on all Basic Automatic Butterfly Valves. Other sizes are optional at extra cost.

† Control Arm Assembly No. 500528 is dimensionally the same as 500527, but has a pointer to indicate relative shutter position.

†† These sizes have extended hub (indicated by dotted lines on drawing) for use with pointer.

LINKAGE CONTROL RODS

Zinc-Plated Cold-Rolled Steel.

DIA.	PART NO.	LENGTH
5/16"	12730	8"
	12730-1	10"
	12730-2	15"
	12730-3	24"
	12730-5	6"

DIA.	PART NO.	LENGTH
1/2"	10175-1	12"
	10175-2	15"
	10175-3	18"
	10175-4	24"
	10175-5	30"
	10175-6	36"
	10175-7	48"
	10175-8	60"
	10175-9	72"

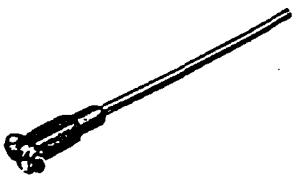

Assembly Number 500978 is for use on Lever Type Pneumatic Operators. The rod is zinc-plated cold-rolled steel. Shoulder screw is Part Number 14241; locknut is Part Number 13892.

309

OPERATORS FOR AUTOMATIC BUTTERFLY VALVES

CONTROL MOTORS

Model	Eclipse Part Number	Stroke, Degrees	Timing, Seconds	Torque, Lb.-in.	Volts	Crank Arm Part Number	Crank Arm Included w/Motor
Two Position							
Eclipse							
EMA-405	12616	180	20	16	120	12666	Yes
Honeywell							
M644A-1024	10826	90	30	150	24	18093	No
White Rodgers[1]							
3405-3	16058	90	40	20	24	3/8"[5]	No
Proportioning with Slidewire Feedback							
Eclipse							
EMP-423-1[2]	12618	90	12	60	120	12666	Yes
EMP-424-1[2]	12622	90	12[3]	60	120	12666	Yes
EMP-453-1[2]	12632	90	40	220	120	12666	Yes
EMP-454-1[2]	12634	90	40[3]	220	120	12666	Yes
Honeywell							
M941B-1007	17997	160[6]	60[6]	150	24	18093	No
Penn							
M80JAA-3	13154	90[4]	30	80	24	18270	No
Potentiometer Positioned Proportioning							
Eclipse							
EMP-423-2	12640	90	12	60	120	12666	Yes
EMP-424-2	12642	90	12[3]	60	120	12666	Yes
EMP-453-2	12646	90	40	220	120	12666	Yes
EMP-454-2	12651	90	40[3]	220	120	12666	Yes
Honeywell							
M941A-1024	16107	160[7]	120[7]	150	24	18093	No
M941A-1057	15433	90[8]	15[8]	75	24	18093	No
Current to Position Proportioning, 4-20 mA Input							
Eclipse							
EMP-423-3	12652	90	12	60	120	12666	Yes
EMP-424-3	12653	90	12[3]	60	120	12666	Yes
EMP-453-3	12656	90	40	220	120	12666	Yes
EMP-454-3	12655	90	40[3]	220	120	12666	Yes
Honeywell							
M744S-1005	12200	90	30	150	120	18093	No

[1]Double ended shaft. Must be mounted with shaft horizontal.
[2]Can be used as two position if internal slidewire is not connected.
[3]Adjustable timing. Maximum is approximately ten times the minimum shown.
[4]Adjustable stroke, built-in position indicator. Solid state drive.
[5]See 3/8" BV control arms, page 4.
[6]Field adjustable to 90° stroke, 30 seconds, 150 lb.-in.
[7]Field adjustable to 90° stroke, 60 seconds, 150 lb.-in.
[8]Field adjustable to 160° stroke, 30 seconds, 75 lb.-in.

MOTOR ACCESSORIES

ITEM	DESCRIPTION
16921	120 to 24V. transformer for Penn, Honeywell, or White Rodgers Motors. Plate mounted, fits 4 x 4 electrical junction box.
14892	120 to 24V. transformer, Honeywell motors only. Mounts in place of standard motor cover.
12674	Auxiliary slidewire kit, Eclipse motors only.
12670	Auxiliary switch kit, Eclipse motors only.
12676	Weather resistant cover, Eclipse motors only.
12677	Paralleling relay, Eclipse motors only.
12707	35 ohm slidewire, Eclipse motors only.

PNEUMATIC ACTUATORS

LEVER ACTUATED MODELS

12476—Honeywell 863T-1-G-0-1 Short Lever Model Air-O-Motor, Type 03. With positioner, direct acting. Supply air pressure 18 to 25 psig for 3 to 15 psig instrument air. Maximum stroke from 3-1/4" to 4-5/16", depending on lever pivot point used.

12851—Honeywell 8610314-108 Short Lever Model Air-O-Motor, Type 03. Less positioner. For 3 to 15 psig instrument air. Maximum stroke from 3-1/4" to 4-5/16", depending on lever pivot point used.

THRUST MODELS

11139—Honeywell 8610314-112 Thrust Model Air-O-Motor, Type 03. Less positioner, direct acting. For 3 to 15 psig instrument air. 1-1/2" stroke. This operator has limited application because of the short stroke. For greater stroke, use 13114.

13114—Barber-Colman Model MK3141. 3 to 15 psig range with 4" stroke; 3 to 13 psig range with 3-1/2" stroke. Minimum stroke 2". A positive action pneumatic relay can be supplied for this operator on special order.

DUAL BUTTERFLY VALVE & LOW FIRE CAM/MICRO SWITCH ASSEMBLIES

All Eclipse Butterfly Valves, with the exception of the manual models, are manufactured with extended shutter shafts as standard equipment in order to accommodate an additional control arm for dual valve or low fire cam/micro switch requirements in combustion systems. The photos on this page are representative of common arrangements available, furnished completely assembled, if so ordered, from the Eclipse factory.

The assembly brackets are special order items based on valve sizes selected and specific piping requirements.

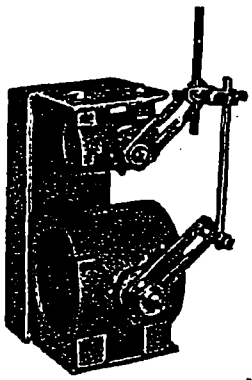

This dual valve arrangement can accommodate either pneumatic or electric operators. It may be ordered with or less operator, assembled or disassembled, and comes complete with butterfly valves (as specified by customer), mounting bracket and linkage assembly (except for operator control arm if ordered less operator).

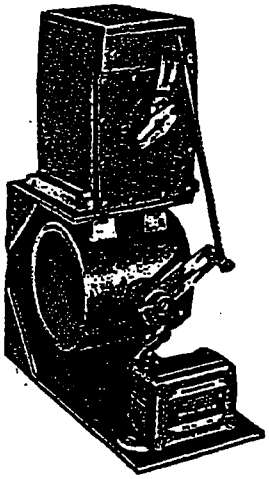

For electric operation, this arrangement is designed to prove low fire in combustion systems and may be ordered complete as shown here, less operator and operator control arm, or disassembled.

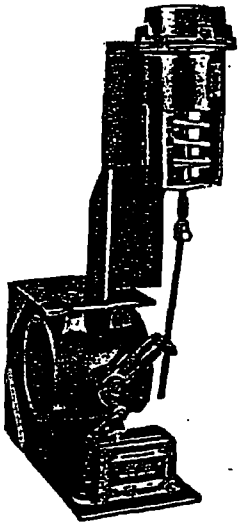

This cam/microswitch set-up is assembled for pneumatic (thrust type) operation and is also for proving low fire in combustion systems. It, too, may be ordered as shown here, less operator, or disassembled.

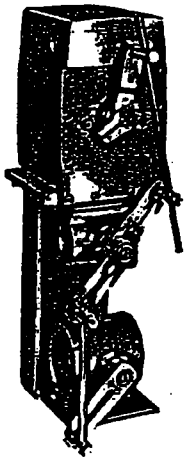

Valve control arm/linkage set-up differs from the dual valve arrangement in that it does not utilize the double block swivel connector, but instead, has an additional control arm on the top valve shaft. This arrangement, too, may be ordered as shown, less operator and operator control arm, or disassembled.

Series 1950 Explosion-Proof Differential Pressure Switches

Compact, low cost, explosion-proof and weatherproof, UL CSA FM

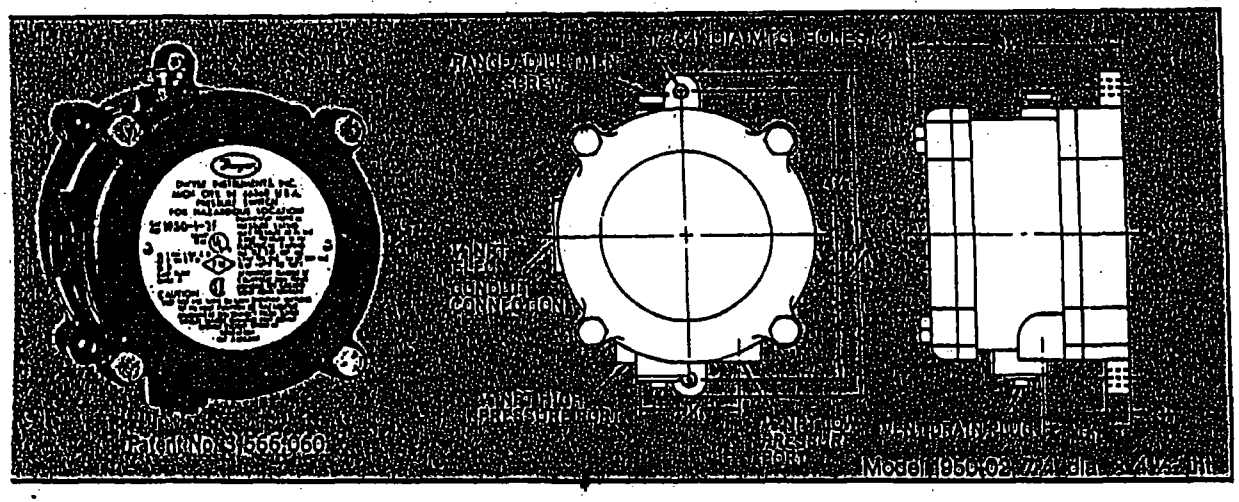

Model 1950 Explosion-Proof Differential Pressure Switch combines the best features of the popular Dwyer series 1900 with an integral explosion-proof and weather-proof housing, making it an exceptional value for either application. It is U.L. and C.S.A. listed, F.M. approved for use in Class I Groups C and D, Class II Groups E, F, and G and Class III hazardous atmospheres (NEMA 7 & 9). Weather-proof features include a drain plug and O-ring seal in cover. Electrical connections are easily made by removing front cover. For convenience the set point adjustment screw is located on the outside of the housing. Twelve models offer set points from .03 to 20 inches W.C. and from .5 to 50 PSI. The unit is very light and compact – about half the weight and bulk of other explosion-proof or weather-proof switches with separate enclosures.

PHYSICAL DATA

Temperature Limits: –40°F to 140°F.
0°F to 140°F for 1950P-8, 15, 25, and 50
–30°F to 130°F for 1950-02

Maximum Surge Pressure:
1950 – 10 PSI, 1950P – 50 PSI
1950P-50 only – 90 PSI

Rated Pressure:
1950 – 45 IN. W.C., 1950P – 35 PSI
1950P-50 only – 70 PSI

Pressure Connections: ⅛" NPT.

Electrical Rating: 15 amps, 125, 250, 480 volts, 60 Hz. A.C. Resistive ⅛ H.P. @ 125 volts, ¼ H.P. @ 250 volts, 60 Hz. A.C.

Wiring Connections: 3 screw type; common, norm. open and norm. closed.

Conduit Connection: ½" NPT.

Set Point Adjustment: Screw type on top of housing. Field adjustable.

Housing: Anodized cast aluminum.

Diaphragm: Molded fluorosilicone rubber. 02 model, silicone on nylon.

Calibration Spring: Stainless steel.

Installation: Mount with diaphragm in vertical position.

Weight: 3¼ lbs. 02 model, 4 lbs., 7 oz.

SERIES 1950 SWITCHES – OPERATING RANGES AND DEAD BANDS

Model Number	Range Inches W.C.	Approximate Dead Band at Min. Set Pt.	Approximate Dead Band at Max. Set Pt.	Price
1950-02	.03 to .10	.025	.05	$106.00
1950-00	.07 to .15	.04	.05	82.00
1950-0	.15 to .50	.10	.15	82.00
1950-1	.4 to 1.6	.15	.20	82.00
1950-5	1.4 to 5.5	.30	.40	82.00
[illegible]	[illegible]	[illegible]	[illegible]	[illegible]
1950-20	4 to 20	.40	.60	82.00

Model Number	Range PSID	Approximate Dead Band at Min. Set Pt.	Approximate Dead Band at Max. Set Pt.	Price
1950P-2	0.5 to 2	.3	.6	$94.00
1950P-8	1.5 to 8	1.0	1.0	94.00
1950P-15	8 to 15	.9	.9	94.00
1950P-25	4 to 25	.7	.7	94.00
1950P-50	15 to 50	1.0	1.5	94.00

CAUTION: For use only with air or compatible gases. Applications with hazardous atmospheres and a single positive pressure may require special venting.

Minitactor™* Differential Pressure Switches

For Air and Compatible Gases. Set Points from 2" w.c. to 7 psi.

BOM# 312

IMPORTANT INSTALLATION AND TEMPERATURE SETTING INSTRUCTIONS FOR THE VULCAN CAL-STAT

Heated System Controls

Controls are a primary component of a heated system. Proper selection of the controls and correct application into the system is the key to optimum economical operation combined with accuracy of process control

System design determines the accuracy of control to a much greater extent than the accuracy of the controls themselves. Temperature gradients (differences in temperature from one part of a system to another) must exist to allow heat transfer, but the presence of extreme or rapidly changing gradients makes close control extremely difficult. The following should be kept in mind designing both simple and complex systems:

1. All parts of the system should be insulated where feasible to reduce heat losses
2. Location of the thermal sensing element should be considered to balance the need of response to temperature changes in the material and the need to reduce over and undershoot at the heat source.
   - Best temperature control is attained with Cal-stat in direct contact with controlled medium
3. The possible use of more than one control to reduce temperature overshoot and undershoot
4. The use of more than one power level for the heaters (full and 1/4 power, three-heat switches, etc.) should be considered.

Vulcan Electric Company Catalog Model Reference Chart

Model	Contact Action on Temperature Rise	Shell Diameter
1*1B9	open	5/8
1*2B9	close	5/8
1*1C9	open	1/2
1*2C9	close	1/2

* Digit Legend

A - Cartridge Style (no mounting option)
B - Blockhead Mounting Option
C - Pipe Thread Mounting Option
D - Flange Mounting Option
E - Coupling Mounting Option

VULCAN ELECTRIC COMPANY

Cautions:

1. This unit is calibrated for ____ degrees fahrenheit
2. Do not expose this unit to more than 100 degrees Fahrenheit (55 degrees celsius) above its calibration point
3. Do not turn the adjusting screw more than 7 revolutions in either direction from room temp. Disassembly of adjusting screw may also render cal-stat inoperative
4. If necessary to reduce the temp. setting in heated system, do not turn adjusting screw more than one revolution or 100 degee fahrenheit temperature drop at a time
5. Do not exceed the rating shown on cal-stat shell
6. The maximum contact ratings for the 5/8" and 1/2" cal-stat are listed under the engineering specifications. Optimum performance is achieved when the contact load is half the maximum rating; improved performance will result when a contactor is used to control the load and the cal-stat is wired through the holding coil of the contactor
7. System vibration can cause contact bounce. Also, controlling systems where themal rise over time is slow can result in overshooting the setpoint. The addition of a capacitor will reduce the bouncing and overshooting. The typical recommended capacitor is 0.1 microfarad rated at a minimum of 600 VDC for 120 VAC circuits and a minimum of 1000 VDC for 240 VAC. The capacitor is wired in parallel across the leads of the cal-stat. Consult factory for application assistance, capacitor selection, and availability.
8. Proper hole sizing for the cal-stat is extremely important to avoid restricting shell expansion during operation and at the same time maintaining proper fit for the best temperature control. For best temperature control the reamed hole sizes required are: (1/2" models - .500 diameter; 5/8" models -.625 diameter)
9. Do not immerse lead end of cal-stat in liquids
10. Do not seal lead end of cal-stat with silicone sealant materials such as oils, caulking, or grease
11. Do not distort cal-stat shell

Vulcan Engineering Specifications

- Underwriters Labs recognized
  1/2" and 5/8" models
  U.L. File #E36322
- Canadian Standards Association certified
  5/8" models
  C.S.A. File #LR23541
- Temperature range: -100 to 600 deg F.
- Set Point Definition: temperature at which contacts open or close
- Standard Factory Set Point:
  75 ± 15 deg F. (24 ± 8 deg C.)
  (Optional factory setting available)
- Temperature Adjusting Rate
  1/2" models: approximately 120 deg F. per revolution
  5/8" models: approximately 90 deg F. per revolution
  (Turning adjusting screw counterclockwise increases set point. See additional setting instructions)
- Vulcan contact switching ratings:
  1/2" models
  5 amp @ 120 VAC; 3 amp @ 240 VAC; 1 amp @ 120 VDC
  5/8" models
  10 amp @ 120 VAC; 5 amp @ 240 VAC; 2 amp @ 120 VDC
- Contact action: slow make and break
- Material
  Sheath: 304 stainless steel
  Flange, pipe thread, and coupling head mounting options are 300 series stainless steel
  Blockhead mounting option is brass
- Lead wire termination
  High temperature MGT insulated stranded nickel clad copper wire 8" long
  1/2" models - #20 AWG; 5/8" models - #16 AWG
  Tolerances all models: +.000, -.004
  (Optional lead lengths available)
- Sheath Diameters
  1/2" models - .499" diameter
  5/8" models - .624" diame
  Toldrances all models: +

DUM# 515 THERMOSTATS

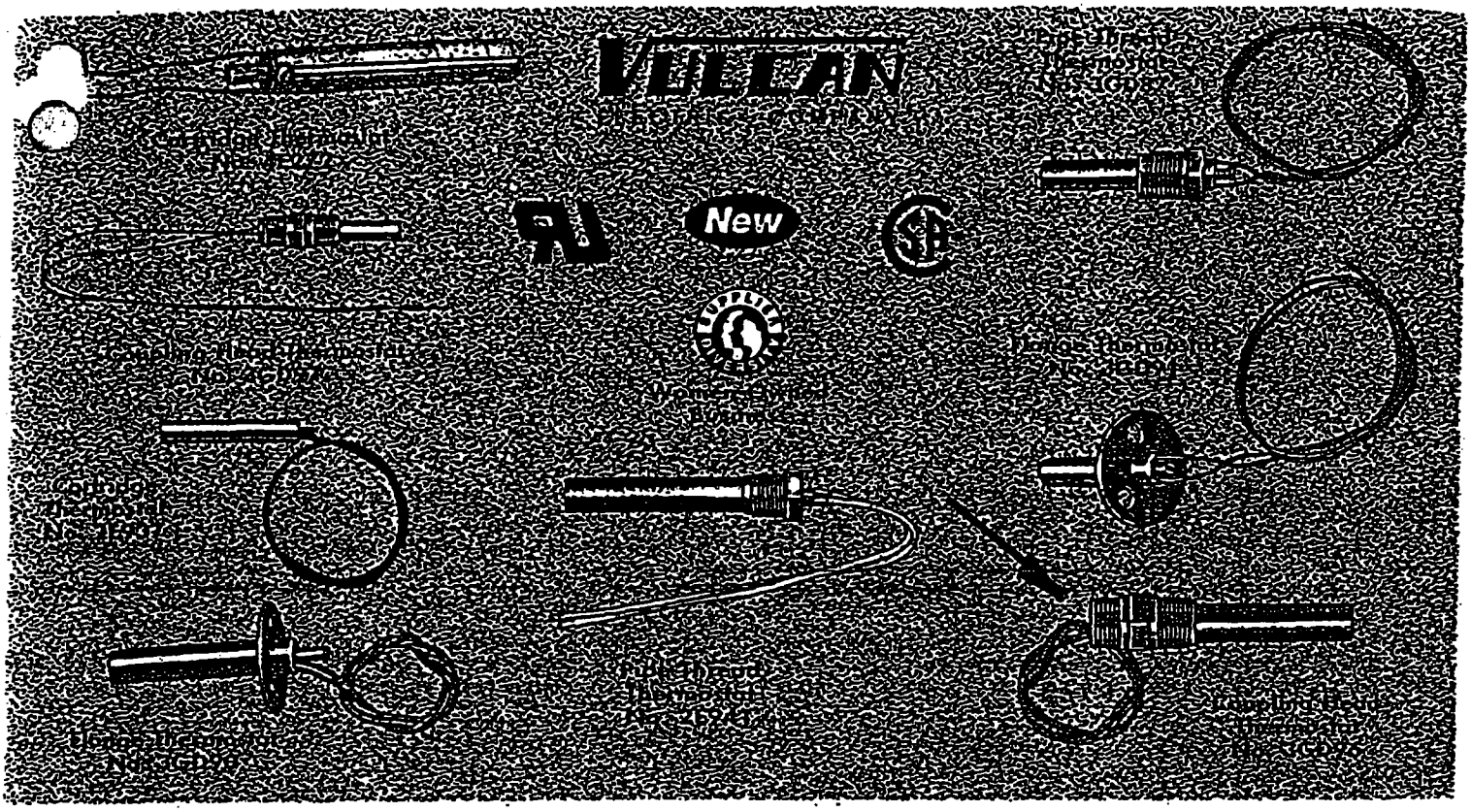

- ¼", ½", and ⅝" diameter sizes
- Corrosion resistant 304 stainless steel sheath
- Temperature adjustment range: -100°F to 500°F on ¼" diameter models and -100°F to 600°F on ½" and ⅝" diameter models
- Differential of 1°F in many applications
- Leads are hi-temp insulated nickel or nickel clad copper wire 8" long. ⅝" diameter models are UL Recognized and CSA Certified. ½" diameter models are UL Recognized
- Cartridge type units are ideal for temperature control of molds, dies, platens, and other solids. They are also suitable for air and gas mediums. Pipe thread, coupling, and flange types are designed for mounting in tanks for temperature control of liquids or gases. Mounting fittings are stainless steel for corrosion resistance

Type	Sheath Dia. (In.)	Contact Action On Temperature Rise	Switch Ratings in Amps @ 120 VAC	@ 240 VAC	@ 120 VDC	Overall Length (In.)	Insertion Depth (In.)	Vulcan Model		Stock No.	List	Each	Shpg. Wt.
Cartridge	1/4	Open	1			1 5/8	1 7/16	1A1D6		4E272	$107.12	$102.40	0.1
Cartridge	1/4	Close	1			1 5/8	1 7/16	1A2D6		4E273	107.12	102.40	0.1
Pipe Thread	1/4	Open	1			1 5/8	3/4	1C1D6	New	3GD87	162.48	126.40	0.2
Pipe Thread	1/4	Close	1			1 5/8	3/4	1C2D6	New	3GD88	158.28	123.15	0.2
Coupling Head	1/4	Open	1			1 3/4	3/4	1E1D6	New	3GD97	187.28	145.70	0.2
Coupling Head	1/4	Close	1			1 3/4	3/4	1E2D6	New	3HC01	183.17	142.50	0.2
Flange	1/4	Open	1			1 5/8	1 1/4	1D1D6	New	3GD91	132.91	103.40	0.2
Flange	1/4	Close	1			1 5/8	1 1/4	1D2D6	New	3GD94	128.54	100.00	0.2
Cartridge	1/2	Open	5	3	1	3 1/4	2 1/2	1A1C9		2E937	67.60	64.35	0.2
Cartridge	1/2	Close	5	3	1	3 1/4	2 1/2	1A2C9		2E938	67.60	64.35	0.2
Pipe Thread	1/2	Open	5	3	1	3 1/4	2	1C1C9		2E941	82.16	78.60	0.2
Pipe Thread	1/2	Close	5	3	1	3 1/4	2	1C2C9		2E942	82.16	78.60	0.2
Coupling Head	1/2	Open	5	3	1	3 1/4	2	1E1C9	New	3GD96	105.94	82.45	0.2
Coupling Head	1/2	Close	5	3	1	3 1/4	2	1E2C9	New	3GD99	105.94	82.45	0.2
Flange	1/2	Open	5	3	1	3 1/4	2 9/16	1D1C9	New	3GD90	89.48	69.65	0.2
Flange	1/2	Close	5	3	1	3 1/4	2 9/16	1D2C9	New	3GD93	89.48	69.65	0.2
Cartridge	5/8	Open	10	5	2	4 3/8	3 9/16	1A1B9		2E935	67.60	64.35	0.2
Cartridge	5/8	Close	10	5	2	4 3/8	3 9/16	1A2B9		2E936	67.60	64.35	0.2
Pipe Thread	5/8	Open	10	5	2	4 3/8	3	1C1B9		2E939	84.24	80.15	0.2
Pipe Thread	5/8	Close	10	5	2	4 3/8	3	1C2B9		2E940	82.16	78.60	0.2
Coupling Head	5/8	Open	10	5	2	4 1/2	3	1E1B9	New	3GD95	107.28	83.45	0.2
Coupling Head	5/8	Close	10	5	2	4 1/2	3	1E2B9	New	3GD98	107.28	83.45	0.2
Flange	5/8	Open	10	5	2	4 3/8	3 9/16	1D1B9	New	3GD89	91.28	71.05	0.2
Flange	5/8	Close	10	5	2	4 3/8	3 9/16	1D2B9	New	3GD92	91.28	71.05	0.2

Series 1950 Explosion-Proof Differential Pressure Switches

Compact, low cost, explosion-proof and weatherproof, UL CSA FM

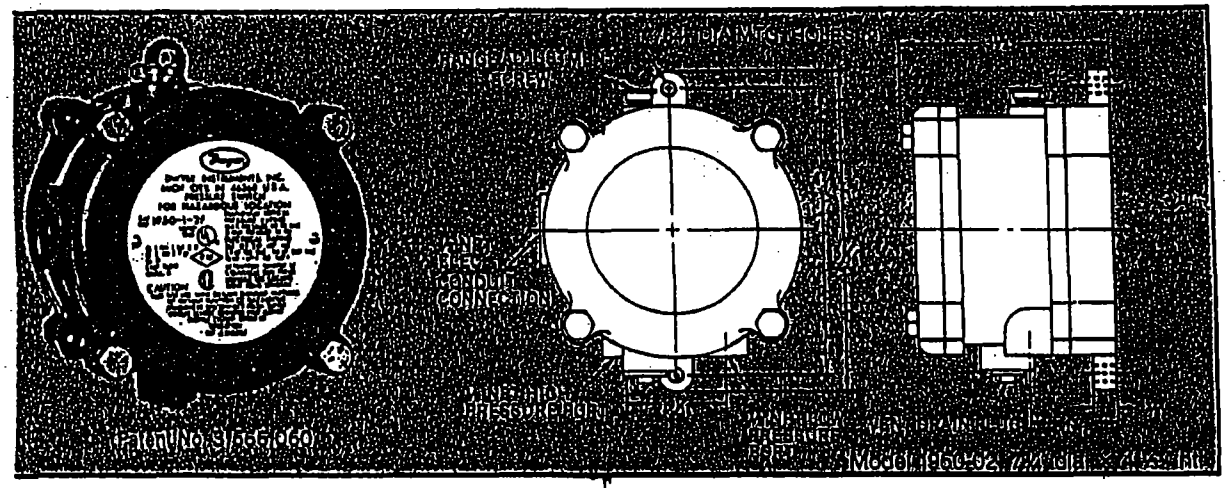

Model 1950 Explosion-Proof Differential Pressure Switch combines the best features of the popular Dwyer series 1900 with an integral explosion-proof and weather-proof housing, making it an exceptional value for either application. It is U.L. and C.S.A. listed, F.M. approved for use in Class I Groups C and D, Class II Groups E, F, and G and Class III hazardous atmospheres (NEMA 7 & 9). Weather-proof features include a drain plug and O-ring seal in cover. Electrical connections are easily made by removing front cover. For convenience the set point adjustment screw is located on the outside of the housing. Twelve models offer set points from .03 to 20 inches W.C. and from .5 to 50 PSI. The unit is very light and compact – about half the weight and bulk of other explosion-proof or weather-proof switches with separate enclosures.

PHYSICAL DATA

Temperature Limits: –40°F to 140°F.
0°F to 140°F for 1950P-8, 15, 25, and 50
–30°F to 130°F for 1950-02

Maximum Surge Pressure:
1950 – 10 PSI, 1950P – 50 PSI
1950P-50 only – 90 PSI

Rated Pressure:
1950 – 45 IN. W.C., 1950P – 35 PSI
1950P-50 only – 70 PSI

Pressure Connections: ⅛" NPT.

Electrical Rating: 15 amps, 125, 250, 480 volts, 60 Hz. A.C. Resistive ⅛ H.P. @ 125 volts, ¼ H.P. @ 250 volts, 60 Hz. A.C.

Wiring Connections: 3 screw type; common, norm. open and norm. closed.

Conduit Connection: ½" NPT.

Set Point Adjustment: Screw type on top of housing. Field adjustable.

Housing: Anodized cast aluminum.

Diaphragm: Molded fluorosilicone rubber. 02 model, silicone on nylon.

Calibration Spring: Stainless steel.

Installation: Mount with diaphragm in vertical position.

Weight: 3¼ lbs. 02 model, 4 lbs., 7 oz.

BOM# 314

SERIES 1950 SWITCHES – OPERATING RANGES AND DEAD BANDS

Model Number	Range Inches W.C.	Approximate Dead Band at Min. Set Pt.	Approximate Dead Band at Max. Set Pt.	Price
1950-02	.03 to .10	.025	.05	$106.00
1950-00	.07 to .15	.04	.05	82.00
1950-0	.15 to .50	.10	.15	82.00
1950-1	.4 to 1.6	.15	.20	82.00
1950-5	1.4 to 5.5	.30	.40	82.00
1950-10	3 to 11	.40	.50	82.00
1950-20	4 to 20	.40	.80	82.00

Model Number	Range PSID	Approximate Dead Band at Min. Set Pt.	Approximate Dead Band at Max. Set Pt.	Price
1950P-2	0.5 to 2	3	3	$94.00
[illegible]	[illegible]	[illegible]	[illegible]	[illegible]
1950P-15	3 to 15	9	9	94.00
1950P-25	4 to 25	7	7	94.00
1950P-50	15 to 50	1.0	1.5	94.00

CAUTION: For use only with air or compatible gases. Applications with hazardous atmospheres and a single positive pressure may require special venting.

Minitactor™* Differential Pressure Switches

For Air and Compatible Gases. Set Points from 2" w.c. to 7 psi.

BOM# 315

Series DS-200 and DS-300 Flow Sensors

For use with the Dwyer Capsuhelic® differential pressure gage to measure high flow rates of air or water in pipes.

The Dwyer flow sensor is an averaging pitot tube providing accurate-and convenient flow rate sensing. When purchased with a Dwyer Capsuhelic® differential pressure gage of appropriate range, the result is a flow indicating system delivered off the shelf at an economical price.

Pitot tubes have been used in flow measurement for years. Conventional pitot tubes sense velocity pressure at only one point in the flowing stream. Therefore, a series of measurements must be taken across the stream to obtain a meaningful average flow rate. The Dwyer flow sensor eliminates the need for "traversing" the flowing stream because of its multiple sensing points and built-in averaging capability.

Dwyer Series DS-300 flow sensors are designed to be inserted in the pipeline through a compression fitting. They are furnished with instrument shut-off valves on both pressure connections. Valves are fitted with ¼" NPT female connections. Accessories include adapters with ¼" SAE 45° flared ends compatible with hoses supplied with the Model A-471 Portable Capsuhelic kit. Standard valves are rated at 200 psig (13.7 bar) and 200°F (93.3°C). Where valves are not required, they can be omitted at reduced cost. Series DS-300 flow sensors are available for pipe sizes from 1" to 10". If replacing a DS-200 flow sensor or using an A-160 thredolet with a DS-300, an optional ¼" X ⅜" bushing, P/N A-161 is required.

DS-200 models are also available in ten insertion lengths from 1" - 10". Operation is similar to DS-300 units. Basic differences are the multi-turn shut-off valves, ⅜" NPT mounting and installed ¼" AE 45° flared pressure connections.

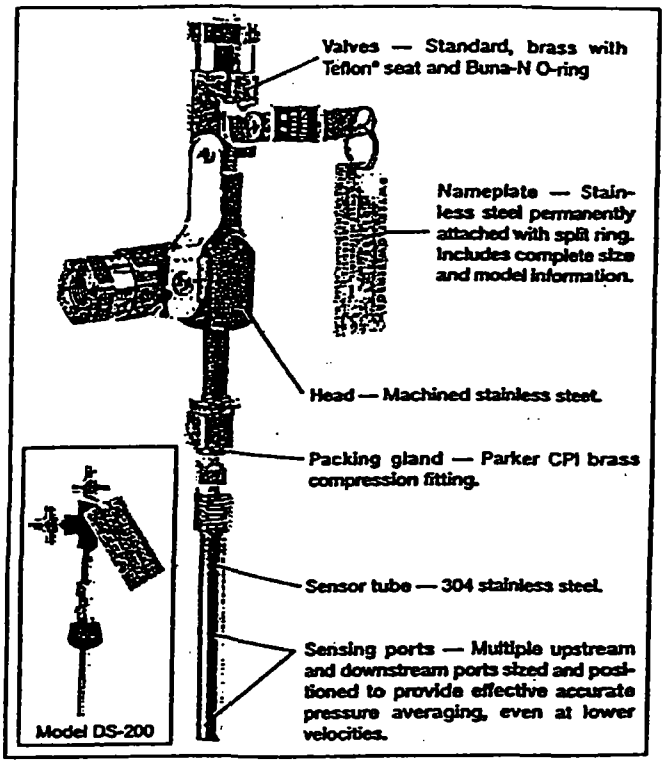

DS-300-6

GAGE RANGE (IN. W.C.)	MEDIA @ 70°F	FULL RANGE FLOWS BY PIPE SIZE (APPROXIMATE)									
		1"	1¼"	1½"	2"	2½"	3"	4"	6"	8"	10"
2	Water (GPM)	4.8	8.3	11.5	20.5	30	49	86	-205	350	560
	Air @ 14.7 PSIA (SCFM)	19.0	33.0	42.0	65.0	113	183	330	760	1340	2130
	Air @ 100 PSIG (SCFM)	50.0	90.5	120.0	210.0	325	510	920	2050	3600	6000
5	Water (GPM)	7.7	14.0	18.0	34.0	47	78	138	320	560	890
	Air @ 14.7 PSIA (SCFM)	30.0	51.0	66.0	118.0	178	289	510	1200	2150	3400
	Air @ 100 PSIG (SCFM)	83.0	142.0	190.0	340.0	610	820	1600	3300	5700	10000
10	Water (GPM)	11.0	19.0	25.5	45.5	67	110	195	450	800	1260
	Air @ 14.7 PSIA (SCFM)	41.0	72.0	93.0	163.0	250	410	725	1690	3040	4860
	Air @ 100 PSIG (SCFM)	120.0	205.0	275.0	470.0	740	1100	2000	4600	8100	15000
25	Water (GPM)	18.0	32.0	40.5	72.0	108	173	310	720	1250	2000
	Air @ 14.7 PSIA (SCFM)	63.0	112.0	155.0	255.0	390	640	1130	2630	4860	7700
	Air @ 100 PSIG (SCFM)	185.0	325.0	430.0	760.0	1200	1800	3300	7200	13000	22000
50	Water (GPM)	25.0	44.0	57.5	100.0	152	247	435	1000	1800	
	Air @ 14.7 PSIA (SCFM)	90.0	161.0	205.0	360.0	560	900	1600	3700	6400	
	Air @ 100 PSIG (SCFM)	260.0	460.0	620.0	1050.0	1700	2600	4600	10000	18500	
100	Water (GPM)	36.5	62.0	82.0	142.0	220	350	620	1500		
	Air @ 14.7 PSIA (SCFM)	135.0	230.0	300.0	505.0	800	1290	2290	5000		
	Air @ 100 PSIG (SCFM)	370.0	660.0	870.0	1500.0	2300	3600	6500	15000		

SERIES DS-300 FLOW SENSORS

Installation and Operating Instructions, Flow Calculations

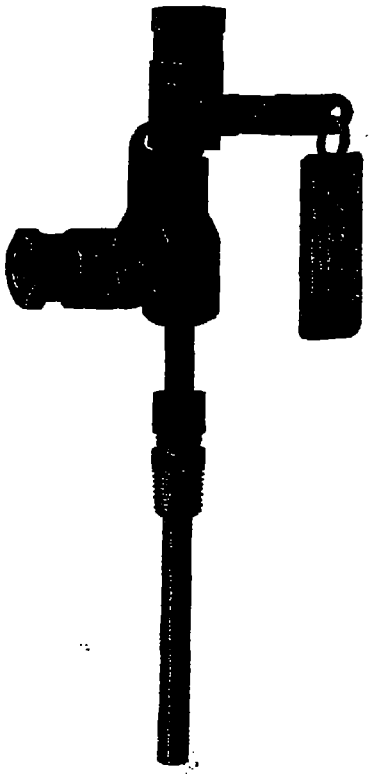

INSPECTION

Inspect the sensor upon receipt of shipment to be certain it is as ordered and not damaged. If damaged, contact carrier.

INSTALLATION

General – The sensing ports of the flow sensor must be correctly positioned for measurement accuracy. The instrument connections on the sensor indicate correct positioning. The side connection is for total or high pressure and should be pointed upstream. The top connection is for static or low pressure.

Location – The sensor should be installed in the flowing line with as much straight run of pipe upstream as possible. This will provide a flow profile as ideal as possible. A rule of thumb is to allow 10-15 pipe diameters upstream and 5 down. The table below lists recommended up and down piping:

PRESSURE AND TEMPERATURE

Maximum 200 psig at 200°F.

UPSTREAM AND DOWNSTREAM DIMENSIONS IN TERMS OF INTERNAL DIAMETER OF PIPE

*SEE NOTE #1

UPSTREAM CONDITION	MINIMUM DIAMETER OF STRAIGHT PIPE		
	UPSTREAM		DOWNSTREAM
	IN-PLANE	OUT OF PLANE	
One Elbow or Tee	7	9	5
Two 90° Bends in Same Plane	8	12	5
Two 90° Bends in Different Plane	18	24	5
Reducers or Expanders	8	8	5
All Valves *See Note 2	24	24	5

*Note #1: Values shown are recommended spacing, in terms of internal diameter for normal industrial metering requirements. For laboratory or high accuracy work, add 25% to values.

*Note #2: Includes gate, globe, plug and other throttling valves that are only partially opened. If valve is to be fully open, use values for pipe size change. CONTROL VALVES SHOULD BE LOCATED AFTER THE FLOW SENSOR.

POSITION

Be certain there is sufficient clearance between the mounting position and other pipes, walls, structures, etc, so that the sensor can be inserted through the mounting unit once the mounting unit has been installed onto the pipe.

Flow Sensors should be positioned to keep air out of the instrument connecting lines on liquid flows and condensate out of the lines on gas flows. The easiest way to assure this is to install the sensor into the pipe so that air will bleed into, or condensate will drain back to, the pipe.

For air or gas flow:
Install in upper quadrant of pipe

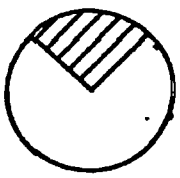

Condensate drains back to pipe

! or liquid or steam flow:
Install in lower quadrant of pipe

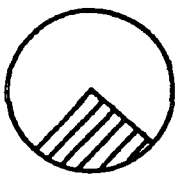

Air bleeds back to pipe.

INSTALLATION

1. When using an A-160 thred-o-let, weld it to the pipe wall. If replacing a DS-200 unit, an A-161 bushing (1/4"×3/8") will be needed.
2. Drill through the center of the thred-o-let into the pipe, with a drill that is slightly larger than the flow sensor diameter.
3. Install the packing gland using proper pipe sealant. If the packing gland is disassembled, note that the tapered end of the ferrule goes into the fitting body.
4. Insert the sensor until it bottoms against the opposite wall of the pipe, then withdraw 1/16" to allow for thermal expansion.
5. Tighten packing gland nut finger tight. Then tighten the nut with a wrench an additional 1 1/4 turns. Be sure to hold the sensor body with a second wrench to prevent the sensor from turning.

INSTRUMENT CONNECTION

Connect the side pressure tap to the high pressure port of the Magnehelic (air only) or Capsuhelic gage or transmitting instrument and the top connection to the low pressure port. See the connection schematics below.

Bleed air from instrument piping on liquid flows. Drain any condensate from the instrument piping on air and gas flows.

Open valves to instrument to place flow meter into service. For permanent installations, a 3-valve manifold is recommended to allow the gage to be zero checked without interrupting the flow. The Dwyer A-471 Portable Test Kit includes such a device.

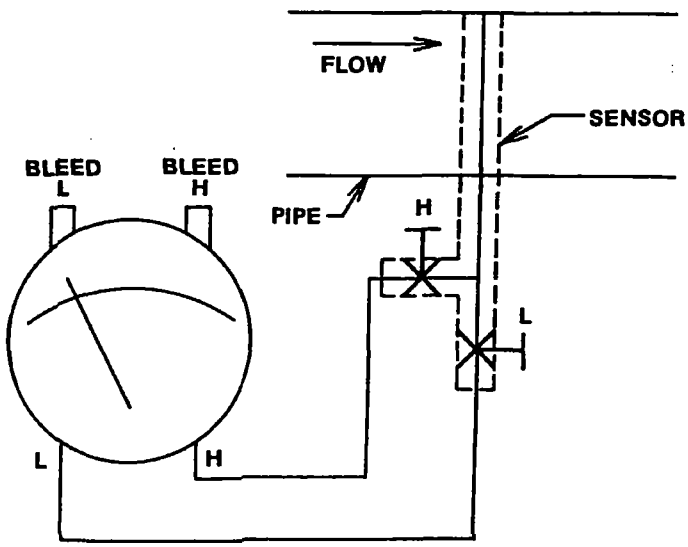

WATER FLOW

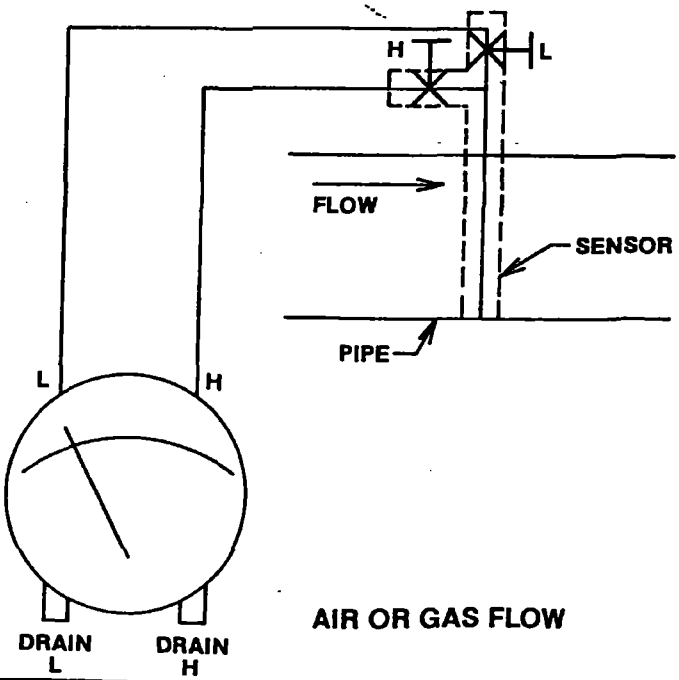

AIR OR GAS FLOW

SERIES DS-300 FLOW SENSORS

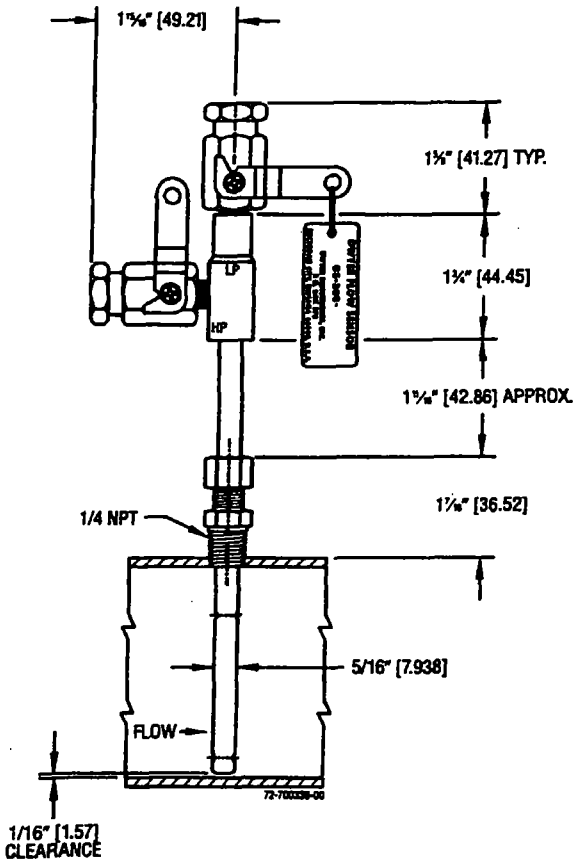

FLOW CALCULATIONS AND CHARTS

The following information contains tables and equations for determining the differential pressure developed by the DS-300 Flow Sensor for various flow rates of water, steam, air or other gases in different pipe sizes.

This information can be used to prepare conversion charts to translate the differential pressure readings being sensed into the equivalent flow rate. Where direct readout of flow is required, use this information to calculate the full flow differential pressure in order to specify the exact range of Dwyer Magnehelic or Capsuhelic gage required. Special ranges and calculations are available for these gages at minimal extra cost. See bulletins A-30 and F-41 for additional information on Magnehelic and Capsuhelic gages and DS-300 flow sensors.

For additional useful information on making flow calculations, the following reference is recommended: Crane Valve Co. Technical Paper No. 410 "Flow of Fluids Through Valves, Fittings and Pipe." It is available from Crane Valve Co., 104 N. Chicago St., Joliet, IL 60431. Phone 815/727-2600. Price including shipping is $20.00

Using the appropriate differential pressure equation from page 4, calculate the differential pressure generated by the sensor under **normal** operating conditions of the system. Check the chart below to determine if this value is within the recommended operating range for the sensor. Note that the data in this chart is limited to standard conditions of air at 60°F (15.6°C) and 14.7 psia static line pressure or water at 70°F (21.1°C). To determine recommended operating ranges for other gases, liquids and/or operating conditions, consult the factory.

Note the column on the right side of the chart which defines velocity ranges to avoid. Continuous operation within these can result in damage to the flow sensor caused by excess vibration.

Pipe Size (Schedule 40)	Flow Coefficient "K"	Operating Ranges Air @ 60°F & 14.7 psia (D/P Inches W.C.)	Operating Ranges Water @ 70°F (D/P Inches W.C.)	Velocity Ranges Not Recommended (Feet per Second)
1	0.52	1.10 to 186	4.00 to 675	146 to 220
1¼	0.58	1.15 to 157	4.18 to 568	113 to 170
1½	0.58	0.38 to 115	1.36 to 417	96 to 144
2	0.64	0.75 to 75	2.72 to 271	71 to 108
2½	0.62	1.72 to 53	6.22 to 193	56 to 85
3	0.67	0.39 to 35	1.43 to 127	42 to 64
4	0.67	0.28 to 34	1.02 to 123	28 to 43
6	0.71	0.64 to 11	2.31 to 40	15 to 23
8	0.67	0.10 to 10	0.37 to 37	9.5 to 15
10	0.70	0.17 to 22	0.60 to 79	6.4 to 10

FLOW EQUATIONS

1. Any Liquid

$$Q\ (GPM) = 5.668 \times K \times D^2 \times \sqrt{\Delta P / S_f}$$

2. Steam or Any Gas

$$Q\ (lb/Hr) = 359.1 \times K \times D^2 \times \sqrt{p \times \Delta P}$$

3. Any Gas

$$Q\ (SCFM) = 128.8 \times K \times D^2 \times \sqrt{\frac{P \times \Delta P}{(T+460) \times S_s}}$$

DIFFERENTIAL PRESSURE EQUATIONS

1. Any Liquid

$$\Delta P\ (in.\ WC) = \frac{Q^2 \times S_f}{K^2 \times D^4 \times 32.14}$$

2. Steam or Any Gas

$$\Delta P\ (in.\ WC) = \frac{Q^2}{K^2 \times D^4 \times p \times 128{,}900}$$

3. Any Gas

$$\Delta P\ (in.\ WC) = \frac{Q^2 \times S_s \times (T+460)}{K^2 \times D^4 \times P \times 16{,}590}$$

TECHNICAL NOTATIONS

The following notations apply:

ΔP = Differential pressure expressed in inches of water column.
Q = Flow expressed in GPM, SCFM or PPH as shown in equation.
K = Flow coefficient — See Values Tabulated on page 3.
D = Inside diameter of line size expressed in inches. For square & rectangular ducts use $D = \sqrt{\frac{4 \times \text{Height} \times \text{Width}}{\pi}}$

P = Static Line pressure (psia)
T = Temperature in degrees Fahrenheit (plus 460=°Rankin)
p = Density of medium in pounds per cubic foot
S_f = Sp Gr at flowing conditions
S_s = Sp Gr at 60°F

SCFM TO ACFM EQUATION

$$SCFM = ACFM \times \left(\frac{14.7 + PSIG}{14.7}\right) \left(\frac{520^*}{460 + °F}\right)$$

$$ACFM = SCFM \times \left(\frac{14.7}{14.7 + PSIG}\right) \left(\frac{460 + °F}{520}\right)$$

$$\text{POUNDS PER CUBIC FOOT STD.} = \text{POUNDS PER CUBIC FOOT ACT.} \times \left(\frac{14.7}{14.7 + PSIG}\right) \left(\frac{460 + °F}{520}\right)$$

$$\text{POUNDS PER CUBIC FOOT ACT.} = \text{POUNDS PER CUBIC FOOT STD.} \times \left(\frac{14.7 + PSIG}{14.7}\right) \left(\frac{520}{460 + °F}\right)$$

1 CUBIC FOOT OF AIR = 0.076 POUNDS PER CUBIC FOOT AT 60°F AND 14.7 PSIA

*(520 = 460 + 60°) Std. Temp. Rankine

©Copyright 1996 Dwyer Instruments, Inc.
Printed in U.S.A. 6/96

FR 72-440451-01

Dwyer® Series 2000 Magnehelic® Differential Pressure Gages

Indicate low air or gas pressures — positive, negative or differential.

Accurate within 2% of Ranges.

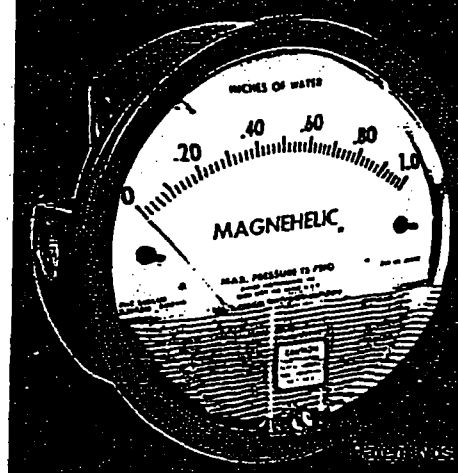

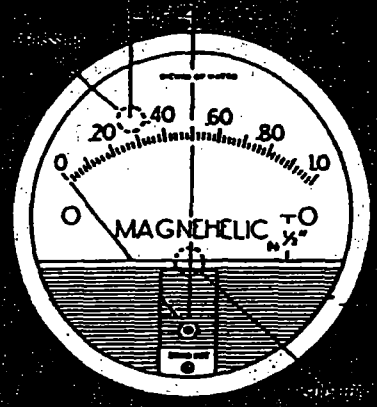

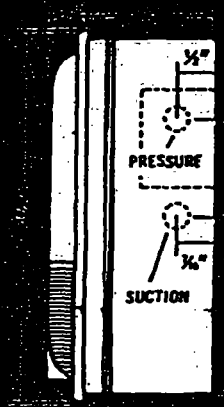

Select the Dwyer Magnehelic® gage for high accuracy — guaranteed within 2% of full scale — and for the wide choice of 81 ranges available to suit your needs precisely. Using Dwyer's simple, frictionless Magnehelic® movement, it quickly indicates low air or non-corrosive gas pressures — either positive, negative (vacuum) or differential. The design resists shock, vibration and over-pressures. No manometer fluid to evaporate, freeze or cause toxic or leveling problems. It's inexpensive, too.

Widely used to measure fan and blower pressures, filter resistance, air velocity, furnace draft, pressure drop across orifice plates, liquid levels with bubbler systems and pressures in fluid amplifier or fluidic systems. It also checks gas-air ratio controls and automatic valves, and monitors blood and respiratory pressures in medical care equipment.

BOM# 316

MOUNTING. A single case size is used for most ranges of Magnehelic® gages. They can be flush or surface mounted with standard hardware supplied. With the optional A-610 Pipe Mounting Kit they may be conveniently installed on horizontal or vertical 1¼" - 2" pipe. Although calibrated for vertical position, many ranges above 1" may be used at any angle by simply re-zeroing. However, for maximum accuracy, they must be calibrated in the same position in which they are used. These characteristics make Magnehelic® gages ideal for both stationary and portable applications. A 4⅜" hole is required for flush panel mounting. Complete mounting and connection fittings plus instructions are furnished with each instrument.

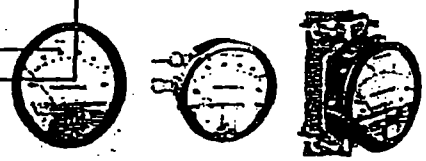

Flush ...Surface...or Pipe Mounted

VENT VALVES

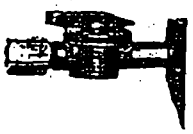

In applications where pressure is continuous and the Magnehelic® gage is connected by metal or plastic tubing which cannot be easily removed, we suggest using Dwyer A-310A vent valves to connect gage. Pressure can then be removed to check or re-zero the gage.

HIGH AND MEDIUM PRESSURE MODELS

Installation is similar to standard gages except that a 4⅜" hole is needed for flush mounting. The medium pressure construction is rated for internal pressures up to 35 psig and the high pressure up to 80 psig. Available in all ranges. Because of larger case, will not fit in portable case. Weight 1 lb., 10 oz (Installation of the A-321 safety relief valve on standard Magnehelic® gages often provides adequate protection against infrequent overpressure; see Bulletin S-101).

PHYSICAL DATA

Ambient temperature range: 20° to 140° F. *

Rated total pressure: -20" Hg. to 15 psig. †

Overpressure: Relief plug opens at approximately 25 psig.

Connections: ⅛" NPT female high and low pressure taps, duplicated — one pair side and one pair back.

Housing: Die cast aluminum. Case and aluminum parts iridite-dipped to withstand 168 hour salt spray test. Exterior finish is baked dark gray hammerloid.

Accuracy: Plus or minus 2% of full scale (3% on -0 and 4% on -00 ranges), throughout range at 70°F.

Standard accessories: Two ⅛" NPT plugs for duplicate pressure taps, two ⅛" pipe thread to rubber tubing adapters and three flush mounting adapters with screws. (Mounting ring and snap ring retainer substituted for 3 adapters in MP & HP gage accessories.)

Weight: 1 lb. 2 oz.

*Low temperature models available as special option.

†For applications with high cycle rate within gage total pressure rating, next higher rating is recommended. See Medium and High pressure options at lower left.

OPTIONS AND ACCESSORIES

Transparent overlays

Furnished in red and green to highlight and emphasize critical pressures.

Adjustable signal flag

Integral with plastic gage cover; has external reset screw. Available for most ranges except those with medium or high pressure construction. Can be ordered with gage or separate.

LED Setpoint Indicator

Bright red LED on right of scale shows when setpoint is reached. Field adjustable from gage face, unit operates on 12-24 VDC. Requires MP or HP style cover and bezel.

Portable units

Combine carrying case with any Magnehelic® gage of standard range (not high pressure). Includes 9 ft of ⅜" I.D. rubber tubing, standhang bracket and terminal tube with holder.

Air filter gage accessory package

Adapts any standard Magnehelic® for use as an air filter gage. Includes aluminum surface mounting bracket with screws, two 5 ft. lengths of ⅛" aluminum tubing two static pressure tips and two molded plastic vent valves, integral compression fittings on both tips and valves.

Dwyer Instruments, Inc. P.O. Box 373/Michigan City, Indiana 46361/Phone 219 879-8000/Fax 219 872-9057 • U.K. Phone (01494)-461707 • Australia Phone (02) 9756-5355

Quality design and construction features

BCM# 316

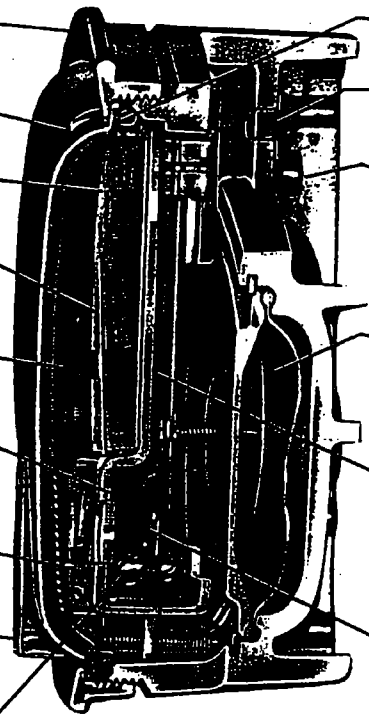

Bezel provides flange for flush mounting in panel.

Clear plastic face is highly resistant to breakage. Provides undistorted viewing of pointer and scale.

Precision litho-printed scale is accurate and easy to read.

Red tipped pointer of heat treated aluminum tubing is easy to see. It is rigidly mounted on helix shaft.

Pointer stops of molded rubber prevent pointer over-travel without damage.

"Wishbone" assembly provides mounting for helix, helix bearings and pointer shaft.

Sapphire bearings are shock-resistant mounted; provide virtually friction-free motion for helix. Motion damped with high viscosity silicone fluid.

Zero adjustment screw is conveniently located in plastic cover, accessible without removing cover. "O" ring seal provides pressure tightness.

"O" ring seal for cover assures pressure integrity of case.

Blowout plug of silicone rubber protects against overpressure on 15 PSIG rated models. Opens at approximately 25 PSIG.

Die cast aluminum case is precision made. Iridite-dipped to withstand 168 hour salt spray test. Exterior finished in baked dark gray hammerloid. One case size used for all standard pressure ranges, and for both surface and flush mounting.

Silicone rubber diaphragm with integrally molded "O" ring is supported by front and rear plates. It is locked and sealed in position with a sealing plate and retaining ring. Diaphragm motion is restricted to prevent damage due to overpressures.

Calibrated range spring is a flat leaf of Swedish spring steel in temperature compensated design. Small amplitude of motion assures consistency and long life. It reacts to pressure on diaphragm. Live length adjustable for calibration.

Alnico magnet mounted at one end of range spring rotates helix without mechanical linkages.

Helix is precision milled from an alloy of high magnetic permeability, deburred and annealed in a hydrogen atmosphere for best magnetic qualities. Mounted in jeweled bearings, it turns freely to align with magnetic field of magnet to transmit pressure indication to pointer.

Dual Scale English/Metric Models			
Model Number	Range In. W.C.	Range [illegible]	Price
2000-0D	0-0.5	[illegible]	[illegible]
2001D	0-1.0	[illegible]	[illegible]
2002D	0-2.0	[illegible]	[illegible]
2003D	0-3.0	[illegible]	[illegible]
2004D	0-0.4	[illegible]	[illegible]
2006D	0-6.0	[illegible]	[illegible]
2008D	0-8.0	[illegible]	[illegible]
2010D	0-10.0	[illegible]	[illegible]

SERIES 2000 MAGNEHELIC® — MODELS AND RANGES

The models below will fulfill most requirements. Page 5 also shows examples of special models built for OEM customers. For special scales furnished in ounces per square inch, inches of mercury, metric units, etc., contact the factory.

Model Number	Range Inches of Water	Price
2000-00	[illegible]	[illegible]
2000-0	[illegible]	[illegible]
2001	[illegible]	[illegible]
2002	[illegible]	[illegible]
2003	[illegible]	[illegible]
2004	[illegible]	[illegible]
2005	[illegible]	[illegible]
2006	[illegible]	[illegible]
2008	[illegible]	[illegible]
2010	[illegible]	[illegible]
2015	[illegible]	[illegible]
2020	[illegible]	[illegible]
2025	[illegible]	[illegible]
2030	[illegible]	[illegible]
2040	[illegible]	[illegible]
2050	[illegible]	[illegible]
2060	[illegible]	[illegible]
2080	[illegible]	[illegible]
2100	[illegible]	[illegible]
2150	[illegible]	[illegible]

Model Number	Range Zero Center Inches of Water	Price
2000-0.25	0-0.25	[illegible]
2001	[illegible]	[illegible]
2002	[illegible]	[illegible]
2003	[illegible]	[illegible]
2004	[illegible]	[illegible]
2005	[illegible]	[illegible]
2006	[illegible]	[illegible]
2008	[illegible]	[illegible]
2010	[illegible]	[illegible]
2015	[illegible]	[illegible]
2020	[illegible]	[illegible]
2025	[illegible]	[illegible]
2030	[illegible]	[illegible]
2040	[illegible]	[illegible]
2050	[illegible]	[illegible]
2060	[illegible]	[illegible]
2080	[illegible]	[illegible]
2100	[illegible]	[illegible]
2150	[illegible]	[illegible]

Dual Scale Velocity Units		
Model Number	Range in W.C. / Velocity - F.P.M.	Price
2000-10V	[illegible]	[illegible]
2000-20V	[illegible]	[illegible]
2000-30V	[illegible]	[illegible]
2002V	[illegible]	[illegible]
2004V	[illegible]	[illegible]

Dual Scale with Metric Units		
Model Number	Range MM of Water	Price
2000-5MM	[illegible]	[illegible]
2000-10MM	[illegible]	[illegible]
2000-25MM	[illegible]	[illegible]
2000-50MM	[illegible]	[illegible]
2000-75MM	[illegible]	[illegible]
2000-100MM	[illegible]	[illegible]

Zero Center Ranges		
2300-20MM	[illegible]	[illegible]

Model Number	Range CM of Water	Price
2000-15CM	0-15	$50.00
2000-20CM	0-20	$50.00
2000-25CM	0-25	$50.00
2000-50CM	0-50	$50.00
2000-80CM	0-80	$50.00
2000-100CM	0-100	$50.00
2000-150CM	0-150	$50.00
2000-200CM	0-200	$50.00
2000-250CM	0-250	$50.00
2000-300CM	0-300	$50.00

Zero Center Ranges		
2300-2CM	1.2-0-2	$55.00
2300-5CM	2.5-0-5	$55.00
2300-8CM	1.5-0-1.5	$55.00

(These Ranges calibrated for vertical scale position.)

Model Number	Range Inches	Price
2000-2"	0-2	$50.00
2000-3"	0-3	$50.00
2000-5"	0-5	$50.00
2000-10"	0-10	$50.00
2000-15"	0-15	$50.00
2000-20"	0-20	$50.00
2000-30"	0-30	$50.00
2300-2"	1-0-1	$55.00
2300-3"	1.5-0-1.5	$55.00

Model Number	Range Millimeters	Price
2000-50	0-50	$50.00
2000-75	0-75	$50.00
2000-100	0-100	$50.00
2000-150	0-150	$50.00
2000-200	0-200	$50.00
2000-250	0-250	$50.00
2000-300	0-300	$50.00
2300-50	25-0-25	$55.00
2300-100	50-0-50	$55.00

Zero Center Ranges		
2300-50MM	25-0-25	$55.00
2300-100MM	50-0-50	$55.00

Model Number	Range Millimeters	Price
2000-1 kPa	0-1	$50.00
2000-2 kPa	0-2	$50.00
2000-3 kPa	0-3	$50.00
2000-5 kPa	0-5	$50.00
2000-7 kPa	0-7	$50.00
2000-10 kPa	0-10	$50.00
2000-15 kPa	0-15	$50.00
2000-20 kPa	0-20	$50.00
2000-25 kPa	0-25	$50.00
2000-30 kPa	0-30	$50.00

Zero Center Ranges		
2300-1 kPa	0.5-0-0.5	$55.00
2300-3 kPa	1.5-0-1.5	$55.00

Accessories

- A-310 3-Way Vent Valve — $5.00
- A-321 Safety Relief Valve — $8.00
- A-432 Portable Kit — $19.00
- A-605 Air Filter Kit — $19.00
- A-610 Pipe Mount Kit — $10.00
- Scale Overlays — Red, Green, Mirrored or Combination

Options (Add suffix to 2000 - S)

- SF (Add Suffix Signal Flag) — Add $10.00
- HP (High Pressure Option) — Add $50.00
- LT (Low Temperatures to -20°F) — Add $3.00
- MP (Med. Pressure Option) — Add $31.00
- SP (Setpoint Indication) — Add $50.00
- Specify Locations Add $5.00 Net

Special Purpose Ranges

Scale No. 2401	Scale No. 2402
Square Bezel	Blank Scale
Specify Range	Specify Range

Model 2000-00N. range -.05 to +.20" W.C. For room pressure monitoring $55.00

ASHCROFT®

BOM# 317

Industrial IXLdp Ultra-Low Differential Pressure Transmitter

- *Certified 0.25 and 0.5% accuracy*
- *High overload protection*
- *NEMA 4X metal construction*
- *Six output signals*
- *Easy installation*

The new Ashcroft® Industrial IXLdp was designed for the measurement and control of very low pressure and flow in industrial and process plant environments. The Industrial IXLdp transmitter features a rugged NEMA 4X enclosure, built-in electrical terminal box isolated from the electronics and threaded process connections.

The Ashcroft IXLdp transmitter utilizes a state-of-the-art variable capacitance sensor with a glass-clad silicon chip. The Si-Glas™ technology combines the inherent high sensitivity of a variable capacitance transducer with the repeatability of a micro-machined, single-crystal silicon diaphragm.

The Si-Glas sensor is composed of sputtered metals and glass molecularly bonded to silicon. There are no epoxies or other organics in the sensor to contribute to drift or mechanical degradation over time.

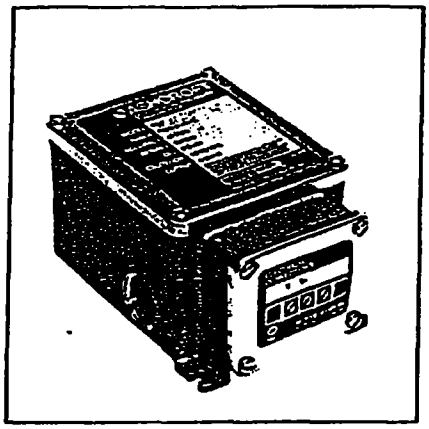

PERFORMANCE SPECIFICATIONS

Standard Ranges (Inches W.C.)
Unidirectional Ranges:
Differential Gage

0/0.1	0/2.0	0/10	0/50
0/0.25	0/2.5	0/15	0/100
0/0.50	0/3.0	0/20	0/150
0/1.0	0/5.0	0/25	0/200

Bidirectional Ranges:
Compound or Vacuum

±0.05	± 2.5	± 20.0
±0.25	± 5.0	± 25.0
±0.50	±10.0	± 50.0
±1.0	±15.0	±100.0

Scaling in other engineering units (eg. kPa, cmH₂O) and special range calibration available – consult factory.

Accuracy Class: (F.S.)	0.5%	0.25%
Nonlinearity		
Terminal point	±0.4	±0.2
Best straight line	±0.3	±0.15
Hysteresis	±0.02	±0.02
Nonrepeatability	±0.05	±0.03
Stability: F.S./year	±0.5%	

ENVIRONMENTAL CHARACTERISTICS

Temperature Limits:
Storage: -40 to 210°F
Operating: -20 to 185°F
Compensated: 0 to 160°F

Thermal Coefficients:

	0.5% Acc.	0.25% Acc.
ZERO	±0.02%F.S./°F	±0.01%F.S./°F
SPAN	±0.02%F.S./°F	±0.01%F.S./°F

Vibration Sweep:
Less than 0.2%F.S./g temporary effect 10-130 Hz

FUNCTIONAL CHARACTERISTICS

Overpressure Limits:
Proof pressure: 15 psid
Burst differential pressure: 50 psid
Maximum static (line) pressure: 100 psig
Static pressure effect: less than 0.5% F.S.

Mounting Position Effect:

1"W.C. and higher	≤0.1% F.S./g
0.25" up to 0.5" W.C.	≤0.5% F.S./g
0.1"W.C.	≤0.8% F.S./g

Warm-up Time:
Full specification: 1 second

Response Time:
Standard: 250ms
Optional: slow: 1 second Consult
fast: 15ms Factory

Resolution: Infinite

ELECTRICAL SPECIFICATIONS

Output Signal Options:
Current: 4-20mA two wire current loop
Voltage: All voltage outputs are 3 wire
0-5 Vdc
1-5 Vdc
1-6 Vdc
±2.5 Vdc
±5 Vdc

Power Supply Range:
12-36 Vdc range without effect on output signal

Reverse Polarity Protected

Internal Zero and Span ±10% F.S. Adjustment

Supply Current:
2.6mA typical for voltage output

PHYSICAL CHARACTERISTICS

Enclosure:
NEMA 4X
300 series stainless steel

Process Connections: Two ¼ NPT female

Electrical Connections: Two ½" female electrical conduit connections isolated from the electronics. Separate access cover for terminal connections

Media: Clean, dry and noncorrosive gas (*consult factory for use on other media*)
NOT FOR USE ON LIQUIDS
IXLdp Low Pressure Transmitter

HAZARDOUS LOCATION CERTIFICATIONS

FM approval is optional (see price sheet)
Factory Mutual approvals intrinsically safe for use in:
Class I, Div. 1, Groups A, B, C, D
Class II, Div. 1, Groups E, F, G
Class III, Div. 1, when wired in accordance with Dresser drawings 718241 (1-3)

- Consult factory on other pressure range, temperature compensation, packaging variations or response times available

TO ORDER THIS TYPE IXLdp TRANSMITTER:

Select: IX [ ] FB2 [ ] ST [ ] YFM — 5 42 2P0 1W

1. Type Configuration (XLdp) _____
2. Accuracy/TC _____
   (2) 0.25%, ±0.01%/°F (5) 0.50%, ±0.02%/°F
3. Pressure Connection _____
   (FB2) 1/4 F
4. Output (4-20mA) _____
   (05) 0/5 Vdc (15) 1/5 Vdc (16) 1/6 Vdc (25) ±5.0 Vdc (42) 4-20mA (50) ±2.5 Vdc
5. Electrical Term. (Terminal) _____
   (ST) Screw Termination
6. Pressure Range (±0.5" W.C. Compound) _____
   Diff. or Gauge: (P1IW) 0.1"W.C. (P5IW) 0.5"W.C. (2P5IW) 2.5"W.C.
   Compound: (P1WL) ±0.1"W.C. (P5WL) ±0.5"W.C. (1WL) ±1.0"W.C. (2P5WL) ±2.5"W.C. (10WL) 10.0"W.C.
7. FM Approval Option _____

Reference Bulletin CT-3

Consult factory for guidance in product selection

INSTRUMENT DIVISION DRESSER

WIKA

Bimetal Thermometers

Type A5300 3"
Type A5301 5"

- STAINLESS STEEL CASE

BOM# 318

- HERMETICALLY SEALED

- ADJUSTMENT SCREW STANDARD

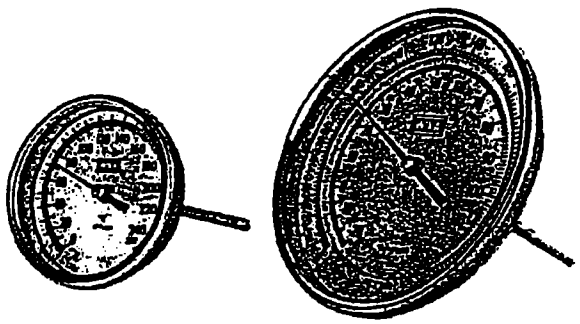

WIKA Bimetal Thermometers are ideal for most rugged industrial temperature measurement applications. The hermetically sealed case offers protection from weather and dust. The bimetal helix is coated with a viscous silicone to minimize pointer oscillation and improve temperature transmission.

Standard stem lengths up to 24" and custom lengths of up to 72" are available with a 3" or 5" dial size.

STANDARD RANGES AND PART NUMBERS

Standard Features

Sizes: 3" (A5300)
5" (A5301)
Case & Stem: 304 stainless steel
Window: Flat instrument glass
Dial: White aluminum
Pointer: Black aluminum
Accuracy: ± 1.0% of span
Scale: Dual scale °F/°C
Single scale °F

External zero adjustment

Type	A5300 3"				
	Single Scale				
Connection	CBM				
Process Conn.	1/2" NPT				
Stem Length	2 ½"	4"	6"	9"	12"
Temperature Ranges (Fahrenheit)					
~~40/120 °F~~	~~9791111~~	~~9791162~~	~~9791243~~	~~9791332~~	9791413
~~0/200 °F~~	[illegible]	~~9791170~~	[illegible]	[illegible]	[illegible]
~~0/250 °F~~	~~9791137~~	~~9791188~~	~~9791265~~	~~9791358~~	~~9791439~~
25/125 °F		9791196	9791277	9791366	
50/300 °F	9791145	9791200	9791285	9791375	
50/400 °F		9791218	9791294		
50/550 °F	9791154	9791226	9791307	9791383	9791447
150/750 °F		9791235	9791315	9791391	9791455
200/1000 °F			9791324	9791405	9791464

Optional Features

- Silicone liquid filling
- Acrylic or safety glass window
- 3/8" stem diameter

Type	A5300 3"				
	Dual Scale				
Connection	CBM				
Process Conn.	1/2" NPT				
Stem Length	2 ½"	4"	6"	9"	12"
Temperature Ranges (Fahrenheit & Celsius)					
40/120 °F & °C	8985023	8985024	9779796	9779809	9779817
0/200 °F & °C	9779850	9779868	9779876		
0/250 °F & °C	9779930	9779949	9779957	9779965	9779973
20/240 °F & °C		9779906	9779914	9779922	
25/125 °F & °C		9779825	9779833	9779841	
50/300 °F & °C		9779981	9779990	8985000	
50/500 °F & °C	8985001	8985002	8985003	8985004	8985005
150/750 °F & °C			8985006	8985007	8985008
200/1000 °F & °C			8985009	8985010	8985011

ABBREVIATIONS
CBM - Center Back Mount

- Items shown with part numbers are available from stock (subject to prior sale).
- Items shown without part numbers are available on special order.

WIKA

Low Pressure Gauges

Type 611.10 2½"

BOM# 319

- BLACK STEEL CASE
- COPPER ALLOY WETTED PARTS
- RECALIBRATION SCREW ON DIAL

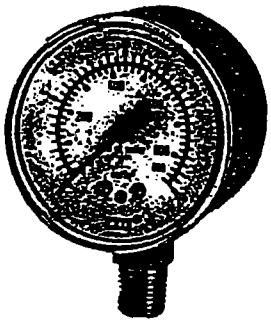

WIKA Type 611.10 low pressure gauges are extremely sensitive and highly accurate. The copper alloy capsule is designed to measure pressure and vacuum of gaseous media from as low as 15"H_2O to 200" H_2O (5 psi). An adjustment screw is located on the dial to re-zero the pointer if necessary. The finely polished nickel silver pinion gear and shaft of the movement ensure repeatable accuracy.

STANDARD FEATURES

Size: 2½" (63 mm)
Case: Black painted steel
Wetted Parts: Copper alloy
Window: Acrylic
Dial: White aluminum
Pointer: Black aluminum
Accuracy: ± 1.5% of span

Brass movement with highly polished bearing surfaces

Recalibration screw on dial

Options Available from Inventory
Chrome-plated or Black-painted steel front flange (FF)
Brass restrictor

ABBREVIATIONS
LM - Lower Mount
CBM - Center Back Mount

* Items shown with part numbers are available from stock (subject to prior sale).
* Items shown without part numbers are available on special order. Minimum order quantities may apply.

STANDARD RANGES AND PART NUMBERS

Type		611.10	
Size		2½"	
Connection		LM	CBM
Conn. Size		1/4" NPT	
Vacuum Range (dual scale)			
" H2O	mm H2O		
0-30	0-760	9852344	9851852
0-60	0-1500	9748321	9748339
0-100	0-2500	9747473	9747465
Pressure Ranges (dual scale)			
" H2O	mm H2O		
0-15	0-380	9851682	9851860
0-30	0-750	9851690	9855785
0-60	0-1500	9851701	9900102
0-100	0-2500	9851810	[illegible]
0-200	0-5000	9851828	9851837
oz./sq. in.	mm H2O		
0-10	0-440	9851771	
0-15	0-660	9851780	[illegible]
0-20	0-880	9851798	
0-30	0-1320	9851747	9851917
0-35	0-1540	9851801	9857273
0-60	0-2640	9851755	9803548
oz./sq. in.	" H2O		
0-20	0-34	9851720	9857281
0-32	0-55	9851739	9855793
Pressure Ranges (single scale)			
psi			
3		9851925	9851836
5		9851933	9851844

BARBER COLMAN COMPANY
a Siebe company

Product Information

BOM# 320

1111/DB 13-8

MAGNESIUM OXIDE INSULATED THERMOCOUPLE WIRE, ELEMENTS, AND BARCOPAC ASSEMBLIES

TYPICAL BARCOPAC® ASSEMBLIES

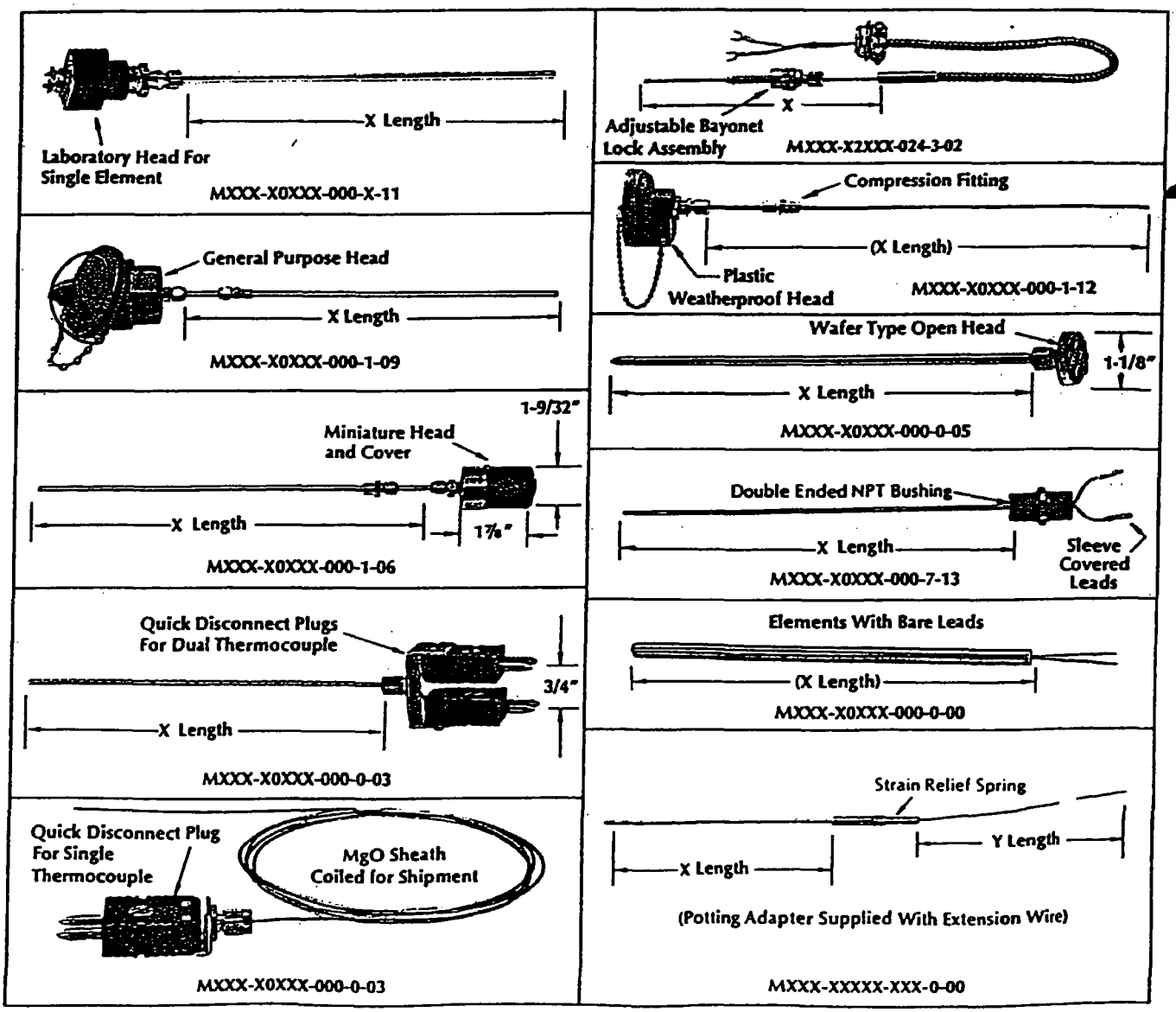

LITHO IN U.S.A.

M 2 2 5 - 6 0 0 1 4 - □ □ □ - 2 - 1 2

Thermocouple

Code Limit	Std. Limit	Type
J	1	J
K	2	K
E	3	E
T	4	T
N.A.	5	R
N.A.	6	S

Available only in Junction Codes 2,5,6

Sheath Material

Code	Material
1	304SS
2	Inconel 600
3	316SS
4	310SS

Sheath Diameter

Code	Diameter (inches)
2	0.040
3	0.063 (1/16)
4	0.125 (1/8)
5	0.188 (3/16)
6	0.250 (1/4)

Junction Construction

Code: 0

Description:

No junction, single element, ends sealed

Code: 1
Description:
Grounded, single element
(Not available with platinum element)

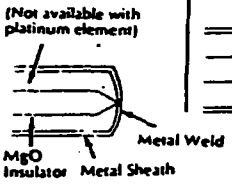

Code: 2
Description:
Ungrounded, single element

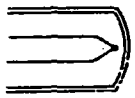

Code: 3
Description:
Exposed, single element
(Not available with platinum element)

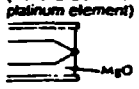

Code: 4
Description:
Grounded, dual
(Not available with platinum element)

Code: 5
Description:
Ungrounded, dual, common

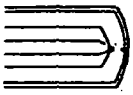

Code: 6*
Description:
Ungrounded, dual, isolated

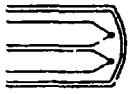

Code: 7
Description:
Exposed, dual, common
(Not available with platinum element)

Code: 8*
Description:
Exposed, dual, isolated
(Not available with platinum element)

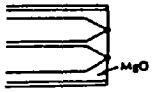

Code: 9
Description:
No junction, dual element, ends sealed

* Not available in .040 or .063 O.D. sheath.

X—Dimension

In whole inches. For maximum lengths see Table 6.

Y—Dimension

In whole inches. Length longer than 998", use 999 and specify length.

Transition Style

All extension wire is solid AWG20, except type "E" is 16 ga. polyvinyl plastic

(Note: Transition temperature rating is 500°F for codes 1, 2, 3, 4, 5; 1000°F for codes 6 and 7.)

Code	Description
0	No transition to flexible lead wire.
1	Fibre-glass covered
2	Fibre-glass with flexible armor cover
3	Fibre-glass with stainless steel overbraid (Type J and K only)

Molded Transition (Not available on .040 O.D.)

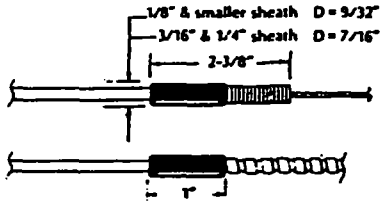

Codes 1, 2 and 3 above are standard.

4 — Polyvinyl plastic (Types J, K, E, T)

5 — Polyvinyl plastic each conductor—nylon overall (Types R and S)

6 — Synthetic Fiber/Fiberglass insulation, (Types J and K only.) Use only for high temperature potting. (1000°F).

7 — Synthetic Fiber/Fiberglass insulation, Types J and K only, with flexible armor cover. Use only for high temperature potting. (1000°F).

9—Stainless steel potting adapter for code 2 and nickel plated brass for codes 1 and 3. Specify either code 1, 2 or 3 in description.

Sixth Digit Codes 4, 5, 9-1 and 9-3

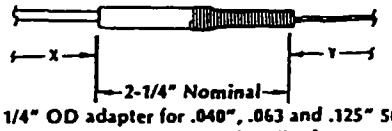

1/4" OD adapter for .040", .063 and .125" 500°F single element, 5/16" OD for all others

Sixth Digit Code 7 and 9-2

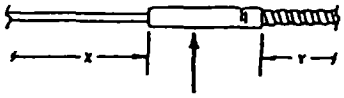

5/16" OD × 1-1/2" long adapter

Process Mounting Devices

Code	Description
0	None
1	Compression Fitting, nickel plated brass, 1/8 inch NPT
2	Compression Fitting, stainless steel, 1/8 inch NPT

Process Mounting Fitting Codes 1, 2, 4 and 5 approx. 1.25" long

3 — Adjustable Bayonet Lock Assembly. Only Sheath Diameters: .063, .125 "X" Dimension 3" minimum.

4 — Compression Fitting, brass nickel plated 1/4 inch NPT. Only Sheath Diameters: .125, .188, .250

5 — Compression Fitting, stainless steel 1/4 inch NPT. Only Sheath Diameters: .125, .188, .250

6 — Fixed SS bushing 1/8 inch NPT. Specify U Dimension from bottom of thread to measuring end of probe. Not available on .040 diameter.

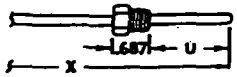

7 — Silver Soldered SS double-ended hex bushings either 1/4, 1/2, 3/4 or 1" NPT available with connector codes (14th and 15th digits) 00, 08, 09, 10, 13 and 27.

Either 1/2, 3/4 or 1" NPT available with connector code 22.

1/4 NPT available with connector codes (14th and 15th digits) 00, 12 and 17. 6th digit code must be 0 for all of these.

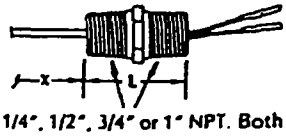

1/4", 1/2", 3/4" or 1" NPT. Both ends have the same thread. Specify thread in description.

NPT	1/4	1/2	3/4	1
L in Inches	1.500	1.750	1.837	2.219

Cold End Terminations

Code — Description

00 — None

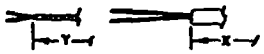

1¼" stripped leads with 6th digit code 0, ¼" stripped for 6th digit codes 1 through 9

01 — 2½" leads with spade lugs Δ

02 — 2½" leads with spade lugs and box connector and locknut Δ

03 — Quick Disconnect Plug(s)

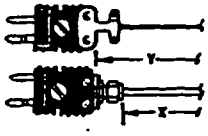

04 — Quick Disconnect Plug(s) and Jack(s)

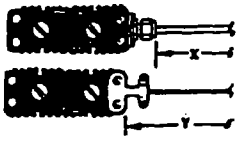

05 — Wafer type open head

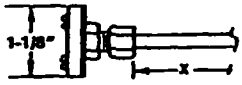

06 — Miniature Head & Cover ††

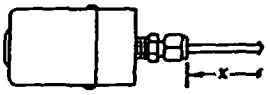

07 — Quick Disconnect Jack(s)

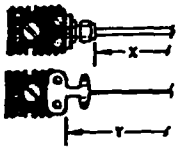

08 — General Purpose Head, cast iron ††

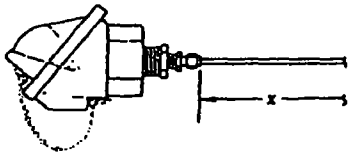

09 — General Purpose Head, aluminum ††

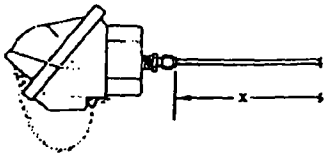

Code — Description

10 — Weatherproof Head, internal threads, cast iron †† **

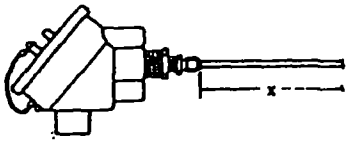

11 — Laboratory Head (Single Element Only) †† **

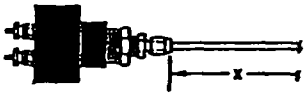

12 — Plastic Weatherproof Head (350°F) **

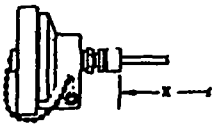

13 — 1½" long fiberglass sleeve covered leads and 34-774 butt connectors (available with code "0" transition only)

(NA with .040 diameter)

14 — High Temperature (800° F) Quick Disconnect Plug(s)

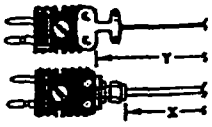

15 — High Temperature (800° F) Quick Disconnect Plug(s) and Jack(s)

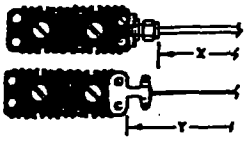

16 — High Temperature (800° F) Quick Disconnect Jack(s)

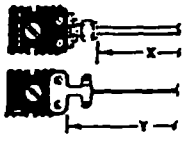

17 — High Temperature (800° F) ** Plastic Weatherproof Head

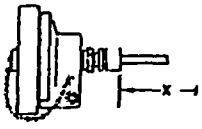

18 — Miniature Quick Disconnect Plug(s) Δ †

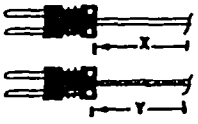

Code — Description

19 — Miniature Quick Disconnect Plug(s) and Jack(s) †

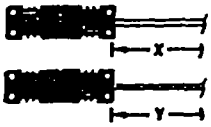

20 — Miniature Quick Disconnect Jack(s) †

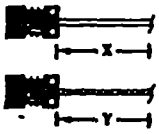

22 — Explosion Proof Head

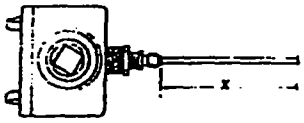

27 — Weatherproof, internal threads, aluminimum

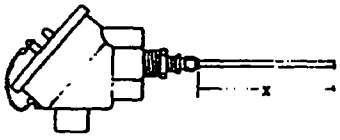

99 = Special Lead Length (Other than standard 2-1/2" leads) Specify code 01 or 02 cold end termination.

†† Limited to 1/8" mgo or larger

** Not available with assemblies using lead wire between MgO and connector.

Δ Available with transition style codes 1, 3, 4, 5 and 6.

† Maximum sheath OD for cold end termination codes 18, 19 and 20 is 1/8" for transition code 0. For these cold end terminations and transition code 0, only single element can be ordered.

BARCOPAK THERMOCOUPLE WIRE

BARCOPAC Thermocouple Wire — The individual thermocouple wires are uniformly insulated with compacted MgO and protected by a stainless steel or Inconel sheath. Bulk wire is provided without junction or terminal connections, its ends are sealed to prevent contamination.

Table 3 Single Element (2 wire)

Part Number SPL Limit	Part Number STD Limit	Calib. Type	Sheath Material	Sheath Outside Diameter in Inches	Max.** Suggested Temp. °F
MJ12	*M112	J	304 S.S.	.040	500
MJ22	M122	J	Inconel 600	.040	500
MJ13	*M113	J	304 S.S.	.063	825
MJ23	*M123	J	Inconel 600	.063	825
MJ33	M133	J	316 S.S.	.063	825
MJ43	M143	J	310 S.S.	.063	825
MJ14	*M114	J	304 S.S.	.125	970
*MJ24	*M124	J	Inconel 600	.125	970
MJ34	M134	J	316 S.S.	.125	970
MJ44	M144	J	310 S.S.	.125	970
*MJ15	*M115	J	304 S.S.	.188	1150
*MJ25	*M125	J	Inconel 600	.188	1150
MJ35	M135	J	316 S.S.	.188	1150
MJ45	M145	J	310 S.S.	.188	1150
MJ16	*M116	J	304 S.S.	.250	1330
*MJ26	*M126	J	Inconel 600	.250	1330
MJ36	M136	J	316 S.S.	.250	1330
MJ46	M146	J	310 S.S.	.250	1330
MK12	M212	K	304 S.S.	.040	1290
MK22	M222	K	Inconel 600	.040	1290
MK32	M232	K	316 S.S.	.040	1290
MK42	M242	K	310 S.S.	.040	1290
MK13	*M213	K	304 S.S.	.063	1600
MK23	*M223	K	Inconel 600	.063	1690
MK33	M233	K	316 S.S.	.063	1690
MK43	M243	K	310 S.S.	.063	1690
MK14	*M214	K	304 S.S.	.125	1600
*MK24	*M224	K	Inconel 600	.125	1960
MK34	M234	K	316 S.S.	.125	1700
MK44	M244	K	310 S.S.	.125	1960
*MK15	[illegible]	K	304 S.S.	.188	1600
*MK25	M225	K	Inconel 600	.188	2100
MK35	[illegible]	K	316 S.S.	.188	1700
MK45	M245	K	310 S.S.	.188	2100
MK16	*M216	K	304 S.S.	.250	1600
MK26	*M226	K	Inconel 600	.250	2100
MK36	M236	K	316 S.S.	.250	1700
MK46	M246	K	310 S.S.	.250	2100
ME12	M312	E	304 S.S.	.040	570
ME13	M313	E	304 S.S.	.063	950
ME14	*M314	E	304 S.S.	.125	1200
ME15	M315	E	304 S.S.	.188	1350
*ME16	M316	E	304 S.S.	.250	1510
ME34	M334	E	316 S.S.	.125	1200
MT12	M412	T	304 S.S.	.040	500
MT13	M413	T	304 S.S.	.063	500
MT14	*M414	T	304 S.S.	.125	600
MT15	*M415	T	304 S.S.	.188	700
*MT16	*M416	T	304 S.S.	.250	700
N.A.	*M523	R	Inconel 600	.063	1800
N.A.	*M524	R	Inconel 600	.125	1800
N.A.	M623	S	Inconel 600	.063	1800
N.A.	*M624	S	Inconel 600	.125	1800

* Designates BARCOPAK bulk stock combinations which are normally in stock.

** These are general suggestions based on consideration of calibration, wire gauge and sheath wall thickness, sheath material, and in no way are meant to indicate successful usage at this temperature, nor the inability for use above this temperature.

Table 4 Dual Element (4 wire)

Part Number SPL Limit	Part Number STD Limit	Calib. Type	Sheath Material	Sheath Outside Diameter in Inches	Max.** Suggested Temp. °F
MJ43-9000	*M143-90000	J	310 S.S.	.063	825
MJ14-9000	*M114-90000	J	304 S.S.	.125	970
MJ15-9000	*M115-90000	J	304 S.S.	.188	1150
*MJ16-9000	*M116-90000	J	310 S.S.	.250	1330
MK23-9000	M223-90000	K	Inconel	.063	1690
MK24-9000	*M224-90000	K	Inconel	.125	2100
MK25-9000	*M225-90000	K	Inconel	.188	2100
MK26-9000	*M226-90000	K	Inconel	.250	2100
ME14-9000	M314-90000	E	304 S.S.	.125	1200
*MT16-9000	M416-90000	T	304 S.S.	.250	700

WHEN ORDERING BARCOPAC WIRE STOCK WRITE

1. Total quantity.
2. Complete 4 or 9 digit part number.

We reserve the right to ship random lengths of our choice.

EXAMPLE

50 feet of 3/16 inch OD, 304SS sheathed, type J Barcopac. Quantity: 50 ft, Part Number: M115

Table 5 Sheath Thickness and Wire Size (AWG)

Sheath OD inches	Tolerance on OD	Wall Thickness	Nominal AWG wire size single	Nominal AWG wire size dual
.040	+.001/−.0005	.006	33	N/A
.063	±.001	.009	28*	29
.125	+.002/−.001	.017	22*	23
.188	+.002/−.001	.025	19	20
.250	+.003/−.001	.033	16	19

*AWG for types R&S is 30 for .063 OD and 26 for .125 OD.

Table 6 Weight per foot of BARCOPAK (approx.) and standard maximum continuous lengths

OD	#/100 feet	Std Max Lengths
.040	0.4	500 ft
‡.063	0.8	250 ft
‡.125	2.8	80 ft
.188	5.0	35 ft
.250	12.5	30 ft

‡Maximum length for types R or S is 20 ft. Consult factory for longer lengths.

Table 7 Fractional, Decimal and Millimeter Equivalents

Inches: Fractions	Inches: Decimals	Millimeters
1/25	.040	1.02
1/16	.063	1.59
1/8	.125	3.18
3/16	.188	4.76
1/4	.250	6.35

Table 2 — MOST ORDERED ASSEMBLIES — ALL WITH 12 INCH SHEATH LENGTH

Calibration Type	SHEATH Material	SHEATH Outside Dia. in Inches	Junction Construction	Extension Wire Insulation	Extension Wire Length in Inches	Attaching Device	Connector	Assembly Part Numbers
J	304 S.S.	0.063	Grounded, Single Element	—	—	—	—	*M113-10012-000-0-00
K	Inconel	0.188		—	—	—	—	*M225-10012-000-0-00
J	304 S.S.	0.188		—	—	Nickel Plated Brass Compression Fitting	General Purpose Head	**M115-10012-000-1-09
K	Inconel	0.250		—	—			**M226-10012-000-1-09
K	304 S.S.	0.125		—	—			**M214-10012-000-1-09
J	304 S.S.	0.125		—	—		Miniature Head and Cover	**M114-10012-000-1-06
J	Inconel	0.063		—	—			**M123-10012-000-1-06
J	304 S.S.	0.125		—	—		Quick Disconnect Plug	**M114-10012-000-1-03
J	Inconel	0.250		—	—		Weather-proof Head	**M126-10012-000-1-10
J	Inconel	0.125		Fiberglass with S.S. Overbraid	24	—	—	**M124-13012-024-0-00
K	304 S.S.	0.188		—	—	—	Quick Disconnect Plug	**M215-10012-000-0-03
K	Inconel	0.125		Fiberglass Covered	24	—	—	**M224-11012-024-0-00
K	Inconel	0.250			24	—	—	**M226-11012-024-0-00
K	Inconel	0.063	Ungrounded Single Element	—	—	—	Quick Disconnect Plug	**M223-20012-000-0-03
K	Inconel	0.125		—	—	—		**M224-20012-000-0-03
J	Inconel	0.125		Fiberglass Covered	24	—	—	**M124-21012-024-0-00

*These are the part numbers for Elements. Element part numbers include Calibration Type, Sheath Material, Sheath Outside Diameter in Inches, Junction Construction, and Length.

**These are the part numbers for complete assemblies. Such complete assemblies include Element, Extension Wire Insulation, Extension Wire Length in Inches, Attaching Device and Connector.

TO ORDER A BARCOPAC ASSEMBLY

Write the complete 15-digit Assembly Order Number

ORDERING EXAMPLE M 1 1 6 - 1 3 024 - 024 - 2 - 03

- **Calibration:** type J
- **Sheath Material:** 304 S.S.
- **Sheath Diameter:** 0.250 inch
- **Junction Construction:** grounded single element
- **Extension Wire:** fiber glass with stainless steel overbraid
- **Sheath Length:** (X Dim) 24 inches
- **Extension Wire Length:** (Y Dim.) 24 inches
- **Attaching Device:** 1/8 inch NPT stainless steel compression fitting
- **Connector:** Plug

TO ORDER A BARCOPAC THERMOCOUPLE ELEMENT

Write the order number which is the first 9 digits of the 15 digit Assembly Order Number. Elements with 14th and 15th digits 00 (MXXX-X0XXX-000-X-00) have 1¼" long bare leads.

ORDERING EXAMPLE M 1 1 6 - 1 0 036

- **Calibration:** type J
- **Sheath Material:** 304 S.S.
- **Sheath Diameter:** 0.250 inch
- **Junction Construction:** grounded single element
- **Extension Wire:** None
- ** **Sheath Length:** 36 inches long

**Approximately 1⅝" to 2" of the specified "X" dimension on these elements is covered by fittings used for attachment to various heads.

BARCOPAC MAGNESIUM OXIDE (MgO) INSULATED THERMOCOUPLES

Thermocouples with magnesium oxide insulation are recommended where the thermocouple is immersed in liquids, high moisture, corrosive gases, or high pressures. The thermocouple can be formed to reach otherwise inaccessible areas. The magnesium oxide has a high dielectric strength, responds quickly to temperature changes, and is very durable.

Magnesium oxide insulated thermocouple wire is manufactured from premium quality wire incased in pure magnesium oxide and processed into a chemically clean outer metal sheath. The wires are individually selected and matched and are of uniform cross section with smooth surfaces. Finished stock is warranted to meet ANSI Standard Limits of Error set forth in MC96.1. The unique preparation of magnesium oxide insulated thermocouple wire produces a uniform thickness of insulation with high density. The result is a product that is mechanically strong and resistant to penetration of corrosive gases and moisture. The diameters of 0.040 and 1/16 inch are useful for applications requiring fast response.

SPECIFICATIONS

Insulation Purity MgO (magnesium oxide) densely packed. High purity 99.4% MgO is used only with Types K, R and S, Inconel Sheathing. All others are Standard Purity 96% MgO.

Minimum Bend Diameter Two times the outside diameter of the sheath.

SUGGESTED CONTINUOUS MAXIMUM TEMPERATURE RATINGS OF SHEATH IN OXIDIZING ATMOSPHERES*

Temperarure ratings vary depending on sheath diameter, sheath material and type calibration. See Table 3 on page 6.

*Not necessarily a recommended temperature. Sheath wall thickness, contaminants, abrasion, and erosion must be considered.

JUNCTION CONSTRUCTION

Grounded Thermocouple welded to the sheath. Fast response with thermocouple protected. Not to be used with noble metal TC.

Ungrounded (Insulated) Thermocouple insulated from sheath with magnesium oxide. Stray EMF's are prevented from affecting the reading. Response from rapid or frequent temperature cycling is slower than for grounded style.

Exposed Thermocouple junction is not protected by welded cap. Used for quick response, but is susceptible to early corrosive failure.

Dual Element Common Two thermocouples with junctions welded.

Dual Element Isolated Two thermocouples electrically separate in the same sheath, provides isolation where instrumentation necessitates.

TIME CONSTANTS

The time constant is the time required for a thermocouple to indicate 63.2% of a step change in temperature in a surrounding media. Some of the factors influencing the measured time constant are sheath wall thickness, degree of insulation compaction, and distance of junction from the welded cap on the ungrounded style. In addition, the velocity of liquid or mass velocity of a gas past the thermocouple probe greatly influences the time constant measurement. In general, time constants for measurement in a gas can be estimated to be 10 times as long as those for measurement in a liquid. The time constant also varies inversely proportional to the square root of the velocity of the media.

Table 1

Approximate Time Constants in Seconds for Different Sheath Diameters in water for a step change from 0°C to 100°C

Sheath Diameter Inches	Grounded Junction	Ungrounded Junction	Exposed Junction
0.040	0.2	0.7	0.1
0.063	0.3	0.8	0.2
0.125	0.5	1.3	0.3
0.188	1.0	2.5	0.5
0.250	2.3	4.3	0.6

Dwyer

SERIES 1950

INTEGRAL EXPLOSION-PROOF PRESSURE SWITCHES

Specifications - Installation and Operating Instructions

BOM# 321

UL and CSA Listed, FM Approved For
CL. I GR. C,D – CL. II GR. E,F,G – CL. III

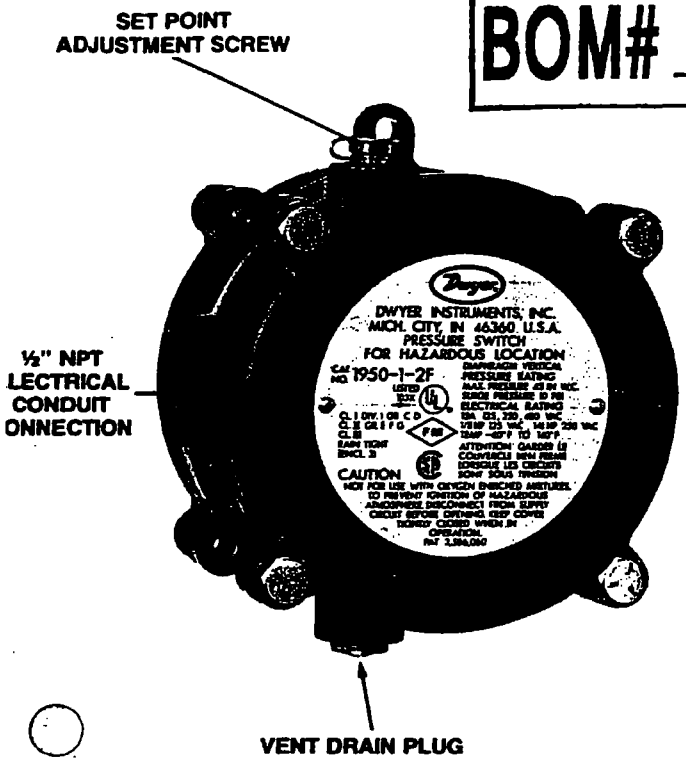

Model 1950 Switches: Operating ranges and dead bands.

To order specify Model Number	Operating Range Inches, W.C.	Approximate Dead Band At Min. Set Point	Approximate Dead Band At Max. Set Point
1950-02	0.03 to 0.10	0.025	0.05
1950-00	0.07 to 0.15	0.04	0.05
1950-0	0.15 to 0.5	0.10	0.15
1950-1	0.4 to 1.6	0.15	0.20
1950-5	1.4 to 5.5	0.3	0.4
1950-10	3.0 to 11.0	0.4	0.5
1950-20	4.0 to 20.0	0.4	0.6
Model Number	**Operating Range PSI**	**Approximate Dead Band Min. Set Point**	**Approximate Dead Band Max. Set Point**
1950P-2	.5 to 2.0	0.3 PSI	0.3 PSI
1950P-8	1.5 to 8.0	1.0 PSI	1.0 PSI
1950P-15	3.0 to 15.0	0.9 PSI	0.9 PSI
1950P-25	4.0 to 25.0	0.7 PSI	0.7 PSI
1950P-50	15.0 to 50	1.0 PSI	1.5 PSI

PHYSICAL DATA

Temperature Limits: –40° to 140°F (–40° to 60°C), 1950P-8, 15, 25 & 50: 0° to 140°F (–17.8° to 60°C), 1950-02: –30° to 130°F (–34.4° to 54.4°C).

Rated Pressure: 1950 — 45 IN. W.C., 1950P — 35 PSI, 1950P-50 only — 70 PSI.

Maximum surge pressure: 1950 — 10 PSI, 1950P — 50 PSI, 1950P-50 only — 90 PSI.

Pressure Connections: 1/8" NPT.

Electrical Rating: 15 amps, 125, 250,480 volts, 60 Hz. A.C. Resistive 1/8 H.P. @ 125 volts, 1/4 H.P. @ 250 volts, 60 Hz. A.C.

Wiring connections: 3 screw type; common, norm. open and norm. closed.

Conduit connections: 1/2" NPT.

Set point adjustment: Screw type on top of housing. Field adjustable.

Housing: Anodized cast aluminum.

Diaphragm: Molded fluorosilicone rubber. 02 model, silicone on nylon.

Calibration Spring: Stainless Steel.

Installation: Mount with diaphragm in vertical position.

Weight: 3 1/4 lbs. 02 model, 4 lbs., 7 oz.

The New Model 1950 Explosion-Proof Switch combines the best features of the popular Dwyer Series 1900 Pressure Switch with a compact explosion-proof housing.

The unit is U.L. and CSA listed, FM approved for use in Class I, Groups C & D, Class II, Groups E, F, & G and Class III atmospheres. It is also totally rain-tight for outdoor installations. Twelve models allow set-points from .03 to 20 inches W.C. and from .5 to 50 PSI.

Easy access to the SPDT switch for electrical hook-up is provided by removing the top plate of the three-part aluminum housing. Adjustment to the set point of the switch can be made without disassembly of the housing. The unit is very compact, about half the weight and bulk of equivalent conventional explosion-proof switches.

CAUTION: For use only with air or compatible gases. Use of the Model 1950 switch with explosive media connected to the **Low** pressure port (including differential pressure applications in such media) is not recommended. Switch contact arcing can cause an explosion inside the switch housing which, while contained, may render the switch inoperative. If switch is being used to sense a single positive pressure relative to atmosphere, run a line from the low pressure port to a non-hazardous area free of combustible gases. This may increase response time on -0 and -00 models.

Response Time: Because of restrictive effect of flame arrestors, switch response time may be as much as 10-15 seconds where applied pressures are near set point.

NOTE: The last number-letter combination in the 1950 model number identifies the switch electrical rating (number) and diaphragm material (letter). The 2F combination is standard as described in the physical data above. In the case of special models, a number 1 rating is the same as 2; a number 3 or 4 rating is 10A 125, 250, 480 VAC - ⅛ HP 125 VAC, ¼ HP 250 VAC; and a number 5 or 6 rating is 1A 125 VAC. A letter B indicates a Buna-N diaphragm, N; Neoprene, S; Silicone, and V; Viton.

DWYER INSTRUMENTS, INC.
P.O. BOX 373 • MICHIGAN CITY, INDIANA 46360 U.S.A.
Telephone 219/879-8000
Fax 219/872-9057

WIKA

Liquid-Filled Gauges

Type 113.13 1½" & 2½"

BOM# 701

- COPPER ALLOY WETTED PARTS
- BLACK ABS CASE
- GLYCERINE-FILLED

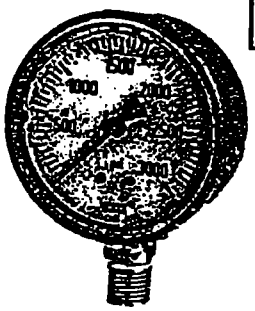

WIKA Type 113.13 is the ideal choice for O.E.M. and general industrial applications requiring an economical, liquid-filled pressure gauge. Where vibration and/or pulsation are encountered, the glycerine fill liquid dampens the Bourdon tube and reduces wear of the movement thereby extending the life of the gauge. Typical applications of the Type 113.13 include air compressors, hydraulic presses, pumps, industrial and marine engines and many other types of hydraulic and pneumatic equipment.

STANDARD FEATURES

Size:	1½" (40 mm)
	2½" (63 mm)
Case:	Black ABS
Wetted Parts:	Copper alloy
Window:	Acrylic, ultrasonically welded to case
Dial:	White plastic
Liquid Fill:	Glycerine
Accuracy:	± 3/2/3% of span (1½")
	ASME B40.1 Grade B
	± 1.5% of span (2½")

Options Available from Inventory
ABS front flange (FF)
U-clamp bracket for panel mounting (UC)
Brass restrictor

STANDARD RANGES AND PART NUMBERS

Type	113.13 Liquid Filled		
Size	1½"	2½"	
Connection	CBM	LM	CBM
Conn. Size	1/8" NPT	1/4" NPT	
Pressure Scale	PSI	PSI	PSI
30 "Hg		9677909	9693289
30"-0-15 psi			
30"-0-30 psi		9677925	
30"-0-60 psi		9677933	
30"-0-100 psi		9677941	
30"-0-160 psi		9677950	
30"-0-200 psi		9677968	
15 psi		9677976	9693351
30 psi	9738240	9677984	9693360
60 psi	9738258	9677992	9693378
100 psi	9738266	9678000	9693386
160 psi	9738274	9678018	9693394
200 psi		9693726	9693408
300 psi		9693734	9693416
400 psi		9693742	9693424
600 psi		9693750	9693432
800 psi			
1,000 psi		9693777	9693459
1,500 psi		9693785	9693467
2,000 psi		9693793	9693475
3,000 psi		9693807	9693483
5,000 psi		9693815	9693491

ABBREVIATIONS
LM - Lower Mount
CBM - Center Back Mount

- Items shown with part numbers are available from stock (subject to prior sale).
- Items shown without part numbers are available on special order. Minimum order quantities may apply.

WALWORTH CAST IRON PLUG VALVES

BOM# 702

CWP 200
SHORT PATTERN
WRENCH OPERATED
CAST IRON BODY AND PLUG

1796
Threaded Ends
~~1797F~~
Flanged Ends

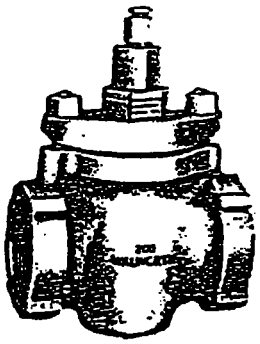

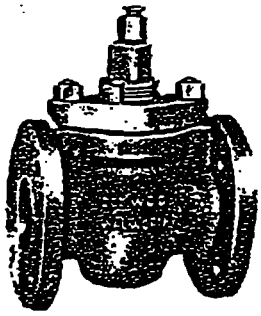

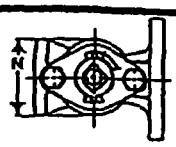

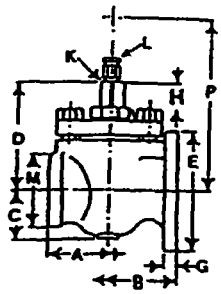

FIGURE	DIMENSIONS AND WEIGHTS		SIZE OF VALVE IN INCHES ½	¾	1	1¼	1½	2	2½	3	4	5
1796	END TO END	A	4.50	4.50	4.50	5	5	5.87	6.75	7.62	9	—
~~1797F~~	~~FACE TO FACE~~	B	—	—	5.50	6.50	6.50	7	7.50	8	9	10
	CENTER TO BOTTOM	C	1.62	1.62	1.62	2	2	2.37	2.37	3.25	4.06	4.50
	CENTER TO TOP	D	3.87	3.87	3.87	4.56	4.56	4.81	5.62	6.31	7.37	7.68
	FLANGE DIAMETER	E	4.25	4.25	4.25	4.62	5	6	7	7.50	9	10
	FLANGE THICKNESS	G	0.43	0.43	0.43	0.56	0.56	0.62	0.68	0.75	0.93	0.93
	SHANK HEIGHT	H	0.93	0.93	0.93	1	1	1.06	1.31	1.43	1.50	1.62
	SHANK SQUARE	K	0.81	0.81	0.81	0.90	0.90	1.06	1.25	1.37	1.50	1.50
	SEALANT FITTING	L	0.25	0.25	0.25	0.25	0.25	0.25	0.37	0.37	0.50	0.50
	HUB DIAMETER	M	2.12	2.12	2.12	2.50	2.81	3.37	3.93	4.62	5.81	—
	WIDTH	N	2.56	2.56	2.56	3.12	3.12	3.62	4.12	4.75	5.75	6.50
	TO REMOVE SEALANT FITTING	P	7.12	7.12	7.12	7.81	7.81	8.06	9.37	10.06	11.62	11.93
	SEALANT STICK SIZE		B	B	B	B	B	B	C	C	D	D
	WRENCH SIZE		D-4	D-4	D-4	E-4	E-4	G-7	K-1	M-1	P-1	P-3
1796	WEIGHT (APPROX.) Lb.		4.8	4.8	4.8	9.3	8.5	13.7	22.5	34.3	54.0	—
1797F	WEIGHT (APPROX.) Lb.		—	—	7.7	13.0	13.4	21.7	33.2	49.0	66.0	88.0

WIKA

Low Pressure Gauges

Type 611.10 2½"

BOM# 704

- BLACK STEEL CASE
- COPPER ALLOY WETTED PARTS
- RECALIBRATION SCREW ON DIAL

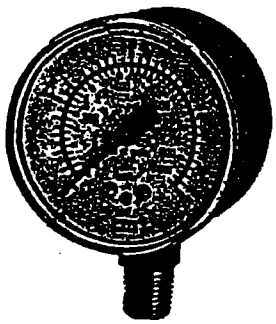

WIKA Type 611.10 low pressure gauges are extremely sensitive and highly accurate. The copper alloy capsule is designed to measure pressure and vacuum of gaseous media from as low as 15"H_2O to 200" H_2O (5 psi). An adjustment screw is located on the dial to re-zero the pointer if necessary. The finely polished nickel silver pinion gear and shaft of the movement ensure repeatable accuracy.

STANDARD FEATURES

Size: 2½" (63 mm)
Case: Black painted steel
Wetted Parts: Copper alloy
Window: Acrylic
Dial: White aluminum
Pointer: Black aluminum
Accuracy: ± 1.5% of span

Brass movement with highly polished bearing surfaces

Recalibration screw on dial

Options Available from Inventory
Chrome-plated or Black-painted steel front flange (FF)
Brass restrictor

ABBREVIATIONS
LM - Lower Mount
CBM - Center Back Mount

* Items shown with part numbers are available from stock (subject to prior sale).
* Items shown without part numbers are available on special order. Minimum order quantities may apply.

STANDARD RANGES AND PART NUMBERS

Type		611.10	
Size		2½"	
Connection		LM	CBM
Conn. Size		1/4" NPT	
Vacuum Range (dual scale)			
" H2O	mm H2O		
0-30	0-760	9852344	9851852
0-50	0-1500	9748321	9748339
0-100	0-2500	9747473	9747465
Pressure Ranges (dual scale)			
" H2O	mm H2O		
0-15	0-380	9851682	9851860
0-30	0-760	9851690	9855785
0-60	0-1500	9851704	9803432
0-100	0-2500	9851810	[illegible]
0-200	0-5000	9851828	9851887
oz./sq. in.	mm H2O		
0-10	0-440	9851771	
0-15	0-660	9851780	[illegible]
0-20	0-880	9851798	
0-30	0-1320	9851747	9851917
0-35	0-1540	9851801	9857273
0-60	0-2640	9851755	9803581
oz./sq. in.	" H2O		
0-20	0-34	9851720	9857281
0-32	0-55	9851739	9855783
Pressure Ranges (single scale)			
psi			
3		9851925	9851836
[illegible]	[illegible]	9851933	9851844

WIKA

Low Pressure Gauges

Type 611.10 2½"

BOM# 705

- BLACK STEEL CASE
- COPPER ALLOY WETTED PARTS
- RECALIBRATION SCREW ON DIAL

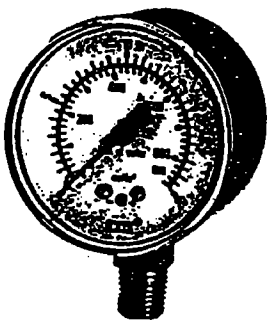

WIKA Type 611.10 low pressure gauges are extremely sensitive and highly accurate. The copper alloy capsule is designed to measure pressure and vacuum of gaseous media from as low as 15"H_2O to 200" H_2O (5 psi). An adjustment screw is located on the dial to re-zero the pointer if necessary. The finely polished nickel silver pinion gear and shaft of the movement ensure repeatable accuracy.

STANDARD FEATURES

Size: 2½" (63 mm)
Case: Black painted steel
Wetted Parts: Copper alloy
Window: Acrylic
Dial: White aluminum
Pointer: Black aluminum
Accuracy: ± 1.5% of span

Brass movement with highly polished bearing surfaces

Recalibration screw on dial

Options Available from Inventory
Chrome-plated or Black-painted steel front flange (FF)
Brass restrictor

ABBREVIATIONS
LM - Lower Mount
CBM - Center Back Mount

* Items shown with part numbers are available from stock (subject to prior sale).
* Items shown without part numbers are available on special order. Minimum order quantities may apply.

STANDARD RANGES AND PART NUMBERS

Type		611.10	
Size		2½"	
Connection		LM	CBM
Conn. Size		1/4" NPT	
Vacuum Range (dual scale)			
" H2O	mm H2O		
0-30	0-760	9852344	9851852
~~0-60~~	~~0-1500~~	~~9748321~~	~~9748339~~
0-100	0-2500	9747473	9747465
Pressure Ranges (dual scale)			
" H2O	mm H2O		
0-15	0-380	9851682	9851860
~~0-30~~	~~0-760~~	~~9851690~~	~~9851785~~
0-60	0-1500	9851704	~~9803432~~
~~0-100~~	~~0-2500~~	~~9851810~~	~~9851878~~
0-200	0-5000	9851828	9851887
oz./sq. in.	mm H2O		
0-10	0-440	9851771	
0-15	0-660	9851780	
0-20	0-880	9851798	
0-30	0-1320	9851747	9851917
0-35	0-1540	9851801	9857273
0-60	0-2640	9851755	9803548
oz./sq. in.	" H2O		
0-20	0-34	9851720	9857281
0-32	0-55	9851739	9855793
Pressure Ranges (single scale)			
psi			
3		9851925	9851836
5		9851933	9851844

BOM# 706

Honeywell

M9161, M9164, M9171, M9174 Modutrol IV Motors

M9161, M9164, M9171, M9174 Modutrol Motors are reversing, proportional motors used to operate valves or dampers in modulating electric (Series 90) control circuits.

*Refer to BOM#310

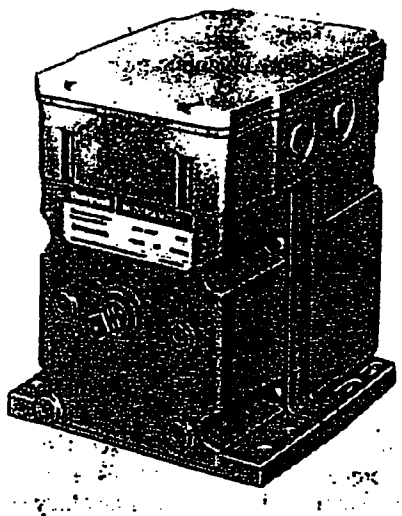

- M9161, M9164 replace M934A Motors. M9171, M9174 replace M934D Motors.
- M9161, M9164 are rated for 35 lb.-in. torque.
- M9171, M9174 are rated for 75 lb.-in. torque.
- Oil immersed motor and gear train for reliable performance and long life.
- Wiring box provides NEMA 3 weather protection.
- 24 Vac operated actuator motor and circuitry. Factory installed transformer models available; field added internal transformer available.
- Quick-connect terminals standard; terminal adapter available.
- Adapter bracket for matching shaft height of older motors standard with replacement motors.
- Field adjustable stroke (90° to 160°) models available.
- Nominal 30 second timing for 90° and 60 second timing for 160° strokes.
- Die-cast magnesium housing.
- Valve and damper linkages, explosion proof housing, and auxiliary switches available.
- Factory mounted internal auxiliary switches available; or field-addable to TRADELINE models.
- Field-addable interface modules, wiring box mounted, available to upgrade actuator to Series 70 (electronic) control.
- Non-spring return motors.

CONTENTS

Specifications	2
Ordering Information	2
Installation	4
Settings and Adjustments	9
Operation and Checkout	13

Q7130A, Q7230A, Q7330A, Q7630A Modutrol IV Interface Modules

The Q7130,Q7230,Q7330, and Q7630 Modutrol IV Interface Modules are used with Series 90 Modutrol IV Motors (M91XX) for conversion to electronic (Series 70) control.

Refer to BOM #311

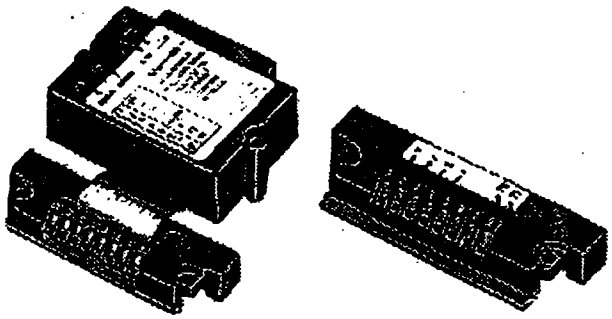

Q7230 Q7330

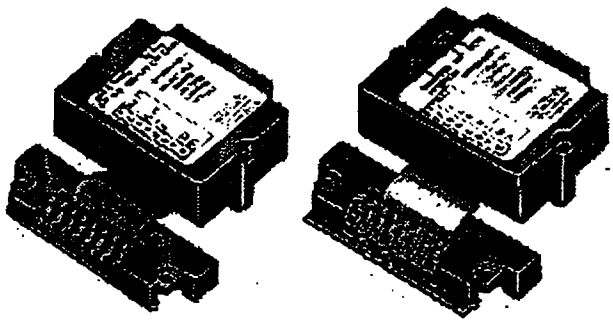

Q7130 Q7630

- Mounts inside the wiring box of any Series 90 Modutrol IV Motor (M91XX models). Module protected from weather by the Modutrol IV NEMA 3 wiring box.
- Mates to quick-connect terminals in motor wiring box and provides screw terminals for control wiring connections.
- Features solid state circuitry with surface mount components.
- Plastic enclosure provides easy handling and protection for circuitry.
- Q7130A provides selectable voltage range (4-7, 6-9, or 10.5-13.5 Vdc). Adapts M91XX Modtrol IV Motor to function as M71XX model for M734H,J, M744D, M745G,P replacements. Includes reversing switch to allow replacement of electrically normally open or electrically normally closed motors.
- Q7230A provides current or voltage control (4-20 mA and 2-10 Vdc) with adjustable zero and span. Adapts the M91XX Modutrol IV Motor to function as M72XX model for M744S,T,Y or M745S,T,Y replacements. Includes reversing switch to allow replacement of electrically normally open or electrically normally closed motors.
- Q7330A is an interface to W936 and W945 controls. Adapts the M91XX Modutrol IV Motor to function as M73XX model for M734D, M744A, M745A replacements.
- Q7630A provides 14-17 Vdc control with minimum position capability. Adapts M91XX Modutrol IV Motor to function as M76XX model for M745K,L or M765K,L replacements. Includes reversing switch to allow replacement of electrically normally open or electrically normally closed motors.

CONTENTS

Specifications 2
Ordering Information 2
Installation 4
Settings and Adjustments 4

HIGH PRESSURE DROP
BUTTERFLY VALVES

Eclipse high pressure drop butterfly valves offer close flow control throughout the range of shaft rotation. They can provide smooth, stable control of combustion systems designed for modulation of gas flow only, such as air heat systems, excess air systems, and many tube firing systems.

BOM# 707

CAPACITY

*Indicates "w.c. drop across valve.

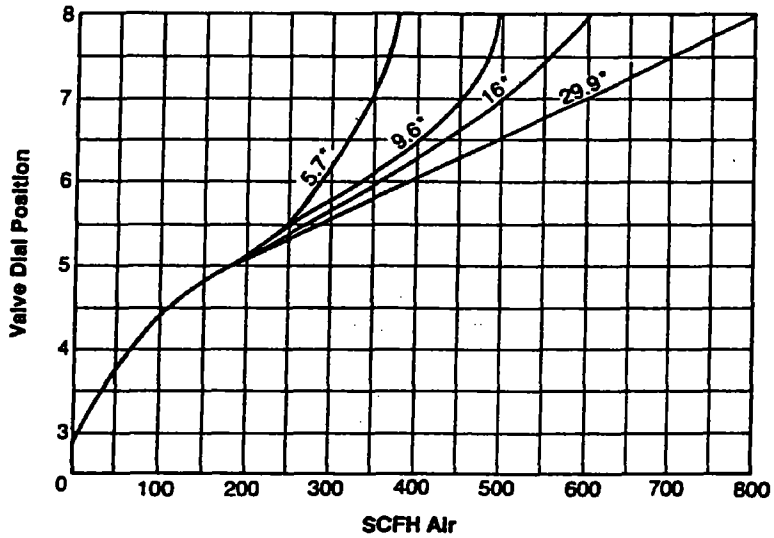

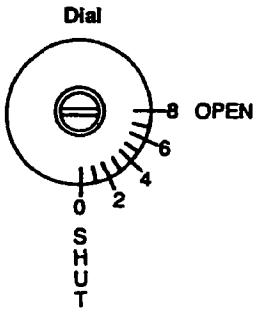

DIMENSIONS

MANUAL—404 BV
Assembly No. 500377

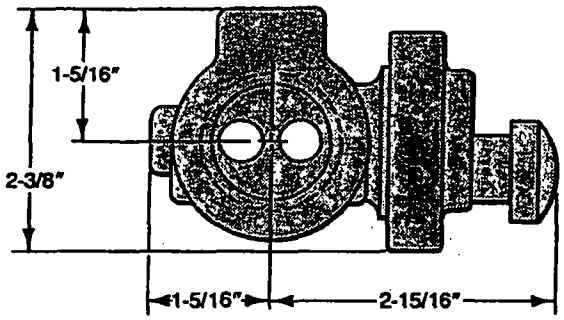

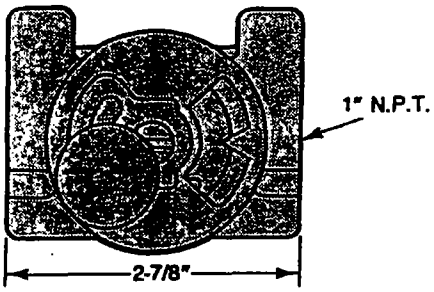

AUTOMATIC—404 BVA
Assembly No. 500378

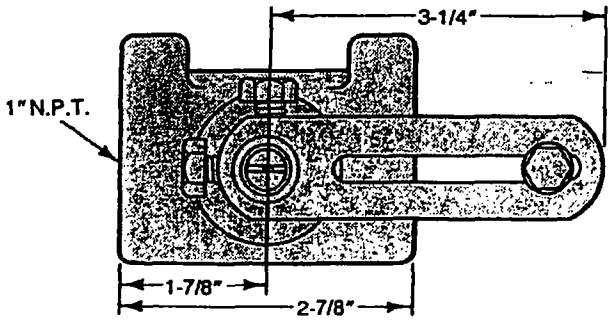

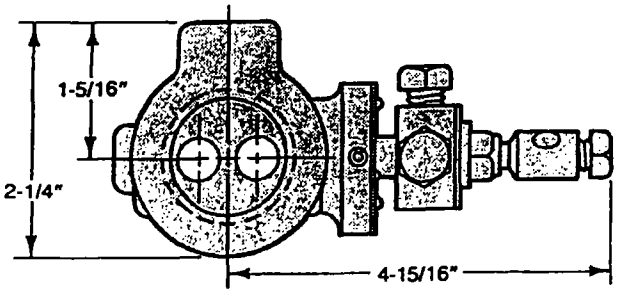

BLOWER PRESSURE/VACUUM RELIEF VALVE (AG258 or AG258F) OPERATING INSTRUCTIONS

BOM# 708

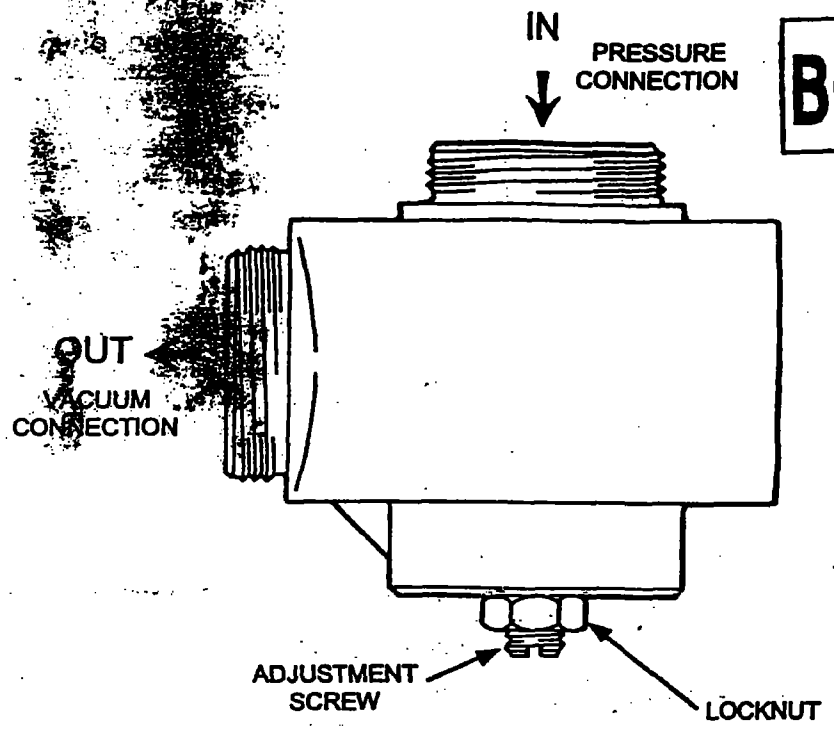

AUTHORIZED SERVICE FACILITIES

Gast Manufacturing Corp
2300 Highway M-139
Benton Harbor, MI 49023
TEL: 616-926-6171
FAX: 616-927-0808

Gast Manufacturing Corp
505 Washington Ave
Carlstadt, NJ 07072
TEL: 201-933-8484
FAX: 201-933-5545

Brenner Fiedler & Assoc.
13824 Bentley Place
Cerritos, CA 90701
TEL: 800-843-5558
TEL: 310-404-2721
FAX: 310-404-7975

Gast Manufacturing Co., Ltd
Beech House, Knaves Beech
Business Centre, Loudwater
High Wycombe, Bucks HP 10 9SD
England
TEL: 011 44 628 532600
FAX: 011 44 628 532470

Wainbee Limited
215 Brunswick Blvd.
Pointe Claire, Quebec
Canada H9R 4R7
TEL: 514-697-8810
FAX: 514-697-3070

Wainbee Limited
5789 Coopers Avenue
Mississauga, Ontario
Canada L4Z 3S6
TEL: 416-213-7202
FAX: 416-213-7207

Japan Machinery Co. Ltd.
Central PO Box 1451
Tokyo, 100-91 Japan
TEL: 81-3-3573-5421
FAX: 81-3-3571-7865
or: 81-3-3571-7896

NOTE: General Correspondence should be sent to–
Gast Manufacturing Corp.
P O Box 97
Benton Harbor, MI 49022-0097

ISO 9001 CERTIFIED

KEEP THIS DOCUMENT FOR FUTURE REFERENCE

This is the hazard alert symbol: ⚠ When you see this symbol, be aware that personal injury or property damage is possible. The hazard is explained in the text following the symbol. Read the information carefully before proceeding.

The following is an explanation of the three different types of hazards:

⚠ **DANGER** Severe personal injury or death will occur if hazard is ignored.
⚠ **WARNING** Severe personal injury or death can occur if hazard is ignored.
⚠ **CAUTION** Minor injury or property damage can occur if hazard is ignored.

GENERAL INFORMATION

By setting a relief valve at a given pressure or vacuum duty you can be assured that no harm will come to the blower or products in your application from excessive duties. The AG258 & AG258F blower relief valves can be adjusted to limit the pressure and/or vacuum level and maintain adequate air flow through the blower to prevent damage from excessive heat.

⚠ **WARNING** Operating Regenair Regenerative blowers with more than 1 HP motors, and insufficient air flow can result in damage to the blower by excessive heating of the air passing through the blower.

INSTALLATION

⚠ **WARNING** When installing the pressure or vacuum relief valve, all power sources to the electric motor and any accessory devices should be disconnected and all rotating parts should be at a standstill or bodily injury could result.

⚠ **CAUTION** For units with air flows exceeding 200 CFM the AG258F relief valve should be used to provide proper air flow through the blower.

⚠ **CAUTION** Relief valve is heavy, dropping valve could cause bodily injury.

The valve is position sensitive. The recommended installation position is with the adjusting screw positioned vertically down. Fine adjustments to the limiting vacuum can be made by rotating the valve body up to 20 degrees from the vertical position.

OPERATION/ADJUSTMENT

The vacuum relief valve will have to be adjusted to limit the vacuum to the blower. The course adjustment of the relief valve is accomplished by loosening the lock nut on the adjusting screw and turning the adjusting screw with the blade of a screwdriver. Turning the adjusting screw clockwise will increase the relief valve setting, and counter clockwise will decrease the setting. Hold the screwdriver in place when retightening the lock nut.

The use of the Gast pressure gauge (part# AE133, or AE133A) or vacuum gauge (part#AE134) will provide and accurate setting.

MAINTENANCE

⚠ **WARNING** All power to the motor must be de-energized and disconnected before servicing. Failure to do so could result in severe personal injury.

All components of the valve are made of corrosion resistant metal. In normal operation the only maintenance required is cleaning the valve with Gast Flushing Solvent (AH255A). Often the valve need not be disassembled to clean. Particular attention should be given to cleaning the small hole through the center of the piston. If this becomes clogged the valve will not function properly. A pin or small diameter wire may be used to clean the blocked hole.

TOP VIEW - VACUUM SETUP

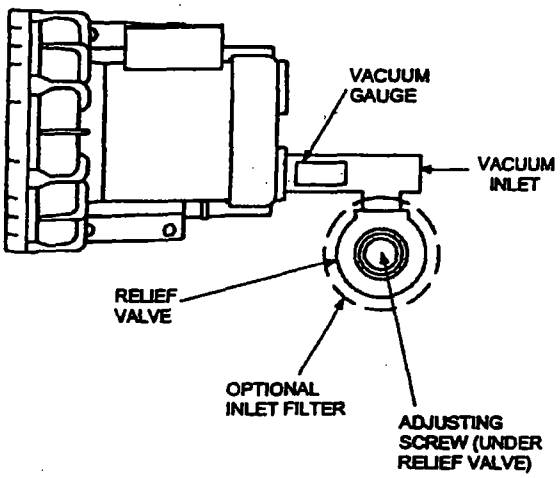

SIDE VIEW - PRESSURE SETUP

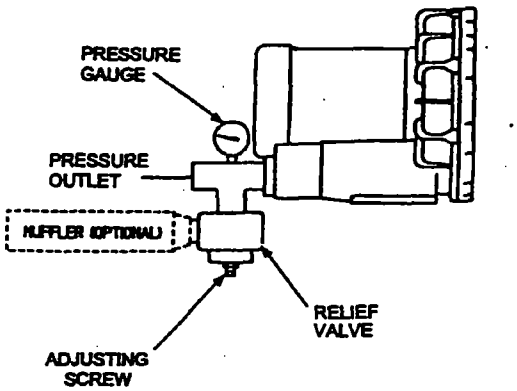

Accessories for GAST REGENAIR Blowers

Relief Valve

By setting a relief valve at a given pressure/vacuum you can be assured that no harm will come to the blower or products in your application from excessive duties.

AG258

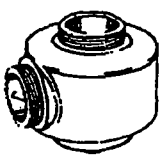

PV Series

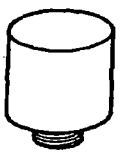

- Pressure/Vacuum Relief Valve, $1^1/_2$" NPT, Adjustable 30-170 in. H_2O, 200 cfm max. **Part #AG258**
- Silencer for AG258 Relief Valve **Part #AJ121D**
- Pressure/Vacuum Relief Valve, $2^1/_2$"NPT, Adjustable for higher flows. **Part #AG258F**
- Silencer for AG258F Relief Valve, **Part #AJ121G**
- Pressure Relief Valve, $1^1/_4$" NPT, preset for 6.5 psi for 50 Hz, **Part #PV065**
- Pressure Relief Valve, $1^1/_4$" NPT, preset for 7.2 psi, for 60 Hz, **Part #PV072**
- Pressure Relief Valve, $1^1/_4$" NPT, preset for 8.4 psi, for 50 Hz, **Part #PV084**
- Pressure Relief Valve, $1^1/_4$" NPT, preset for 9.1 psi, for 60 Hz, **Part #PV091**
- Pressure Relief Valve, $1^1/_4$" NPT, preset for 9.8 psi, for 50 Hz, **Part #PV098**
- Pressure Relief Valve, $1^1/_4$" NPT, preset for 10.2 psi, for 60 Hz, **Part #PV102**

Pressure-Vacuum Gauge

To monitor the system performance so as not to exceed maximum duties. Using two (one on each side of the filter) is a great way to know when the filter needs servicing.

- Pressure Gauge, **Part# AJ496**, $2\ ^5/_8$" Dia., $^1/_4$" NPT, 0-60in. H_2O and 0-150 mbar
- Pressure Gauge, **Part# AE133**, $2\ ^5/_8$" Dia., $^1/_4$" NPT, 0-160in. H_2O and 0-400 mbar
- Pressure Gauge, **Part# AE133A**, $2\ ^5/_8$" Dia., $^1/_4$" NPT, 0-200in. H_2O

- Vacuum Gauge, **Part# AJ497**, $2\ ^5/_8$" Dia., $^1/_4$" NPT, 0-60in. H_2O and 0-150 mbar
- Vacuum Gauge, **Part# AE134**, $2\ ^5/_8$" Dia., $^1/_4$" NPT, 0-160 in. H_2O and 0-400 mbar

Moisture Separators (for vacuum)

The purpose of the moisture separator is to remove liquids from the gas stream in a vacuum process. This helps protect the blower from corrosion and a build up of mineral deposits.

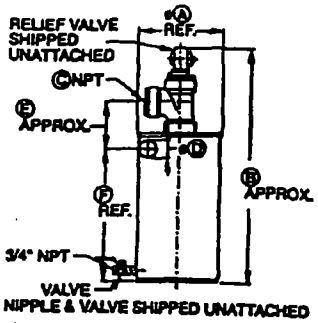

Model No.	R4, R4P, R5 R2M, R3M	R4, R4P, R5, R6, R6M	R5, R6, R6P, R6PS	R6P, R6PP, R7, R7S
Part No.	RMS160	RMS200	RMS300	RMS400
Liquid Cap (gal.)	10	19	19	40
A (dia.)	14.8"	19.7"	19.7"	24"
Dim. B	41.5"	39"	39"	48"
C (NPT)	2"	2"	2.5"	3"
D (dia.)	2"	2"	2.5"	3"
Dim. E	7.5"	7.5"	7.5"	9.7"
Dim. F	26.6"	26.6"	26.6"	29"

Inline Filters (for vacuum)

The impeller of a blower passes very close to the housing. It is recommended to have an inlet or in-line filter to ensure troublefree life.

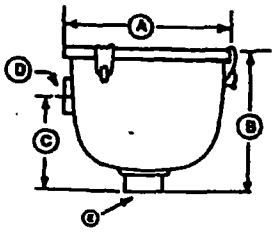

Model No.	R1	R2	R3, R1H	R4, R2H, R2M, R3M, R3H	SDR4, R4P, R5, R7H, R5H, R4H	SDR5, SDR6, R6, R6P, R5H, R5M, R6M, R7M	SDR6P, R6PP, R6PS, R7, R7S	R6M	R5M
Part No.	AJ151A	AJ151B	AJ151C	AJ151D	AJ151E	AJ151G	AJ151H	AJ151L	AJ151M
Dim. A	5.93"	7.38"	7.38"	7.38"	8.75"	8.00"	14.00"	14.00"	18.50"
Dim. B	4.50"	6.81"	6.81"	6.81"	10.25"	10.25"	26.50"	27.13"	28.13"
Dim. C	2.75"	4.62"	4.62"	4.62"	5.00"	5.50"	18.13"	18.5"	19.50"
Dim. D	1" FPT	1" FPT	1 1/4" FPT	1 1/2" FPT	2" FPT	2 1/2" FPT	3" MPT	4" MPT	5" MPT
Dim. E	1" FPT	1" FPT	1 1/4" FPT	1 1/2" FPT	2" FPT	2 1/2" FPT	3" MPT	4" MPT	5" MPT
Replacement Element	AJ135D	AJ135E	AJ135E	AJ135E	AJ135F	AJ135G	AJ135C	AJ135C	AJ135H
Micron	10	10	10	10	10	10	10	10	10

MPT = Male Pipe Thread FPT = Female Pipe Thread

Inlet Filters (for pressure)

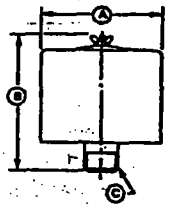

Model No.	R1 & R2	R3	R4, R5, SDR4 & R4P	SDR5, R6, SDR6, R6P, R6PP, R6PS	SDR6P, R7, R7P, R7S
Part No.	AJ126B	AJ126C	AJ126D	AJ126F	AJ126G
Dim. A	6.00"	6.00"	7.70"	10.63"	10.00"
Dim. B	4.62"	7.12"	7.25"	4.81"	13.12"
Dim. C	1" MPT	1 1/4" MPT	1 1/2" MPT	2" FPT	2 1/2" MPT
Replacement Element	AJ134B	AJ134C	AJ134E	AG340	AJ135A
Micron	10	10	10	10	10

MPT = Male Pipe Thread FPT = Female Pipe Thread
All are heavy-duty for high amount of paticulates.
Inlet filters for REGENAIR blowers are drip-proof when mounted as shown.

Horizontal Swing Type Check Valve

Designed to prevent backwash of fluids that would enter the blower. Also prevents air back-streaming if needed. They can be mounted with their discharge either vertical or horizontal. Valve will open with 3" of water pressure.

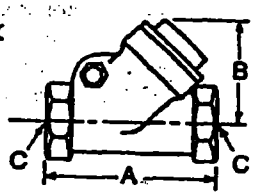

Model No.	R1 & R2	R3	R4, R5, SDR4, SDR5, R4P	R6, R6P, R6PS, SDR6,SDR6P	R7, R7S
Part No.	AH326B	AH326C	AH326D	AH326F	AH326G
Dim. A	3.57"	4.19"	4.50"	5.25"	8"
Dim. B	2.32"	2.69"	2.94"	3.82"	5.07"
Dim. C	1" NPT	1 1/4" NPT	1 1/2" NPT	2" NPT	2 1/2" NPT

Mufflers

Designed to reduce noise by up to 5 dbA and remove high frequency sound associated with all blowers.

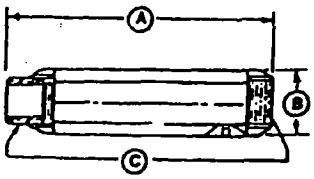

Model No.	R1 & R2	R3	R4, R5, SDR4, R4P	R6, SDR6P, SDR6, R6P, R6PP, R6PS	R7, R7P	R7S
Part No.	AJ121B	AJ121C	AJ121D	AJ121F	AJ121G	AJ121GE
Dim. A	7.46"	7.94"	12.75"	17.05"	17.44"	17.44"
Dim. B	2.38"	2.62"	3.25"	3.63"	4.25"	4.25"
Dim. C	1" NPT	1 1/4" NPT	1 1/2" NPT	2" NPT	2 1/2" NPT	2 1/2" NPT

BOM# 709

Equimeter INCORPORATED

A member of the BTR Group

Regulator Installation and Maintenance Instructions

043 Service Regulator

The 043 Service Regulator is designed to handle a variety of small loads. Use the 043 for industrial or commercial applications. This regulator can also be used for standard residential services; boilers, burners, furnaces/ovens, unit heaters, gas engines, and other applications.

Although most 043 installations are for natural gas, it can be used for air, dry CO_2, nitrogen, propane or butane.

Simple design and rugged construction provide an ideal combination of economy, dependability and excellent performance.

The 043 Service Regulator is available in many sizes and is capable of managing various inlet and outlet pressures.

PIPE SIZES		
Angle Body Models: 043-90, 043-91, 043-92	**Straight Through Body** Models: 043-180, 043-181, 043-182	
¾" x ¾"	⅜" x ⅜"	¾" x ¾"
¾" x 1"	⅜" x ½"	¾" x 1"
1" x 1"	½" x ½"	1" x 1"

Installation and Start-Up

1. Remove the shipping plugs from both the regulator inlet and outlet connections and from ¼" vent on -90 and -180 models.

2. Make certain that the inside of the piping and the regulator inlet and outlet connections are clean—they must be free of dirt, pipe dope and other debris.

3. Use pipe joint material only on the male threads of the pipe being connected to the regulator. *Do not* use pipe joint material on the female threads of the regulator.

4. Install the regulator in the line. Make certain that the gas flow through the regulator is in the direction as indicated by the arrow on the regulator body.

   The regulator may be installed in any position: upright, upside down, vertical piping, diagonal piping, etc. The diaphragm case assembly may be rotated by removing four screws (2) to various positions in relation to the body.

   The diaphragm case vent must be positioned to protect against flooding, drain water, ice formation, traffic, tampering, etc. The vent must be protected against nest building animals, bees, insects, etc. to prevent vent blockage and minimize the chances for foreign material from collecting in the vent side of the regulator diaphragm. If required, the upper diaphragm case may be rotated by removing the upper to lower case flange screws and rotating the upper diaphragm case to the desired position. Reinstall the diaphragm flange screws and tighten to hold the upper diaphragm case in position and reseal.

CAUTION

Turn gas on very slowly. If an outlet stop valve is used, it should be opened first. Do not overload the diaphragm with a sudden surge of inlet pressure. Monitor the outlet pressure during start-up to prevent an outlet pressure overload.

5. Turn the gas on very slowly.

6. Make certain that there are no leaks and that all connections are tight.

7. Adjust outlet pressure (set-point) by removing cap (4) and turning adjustment spring button (5). Turn clockwise to increase and counter-clockwise to decrease outlet pressure. Only adjust when gas is flowing through regulator.

CAUTION

It is the user's responsibility to assure that all regulator vents and/or vent lines exhaust to a non-hazardous location away from any potential sources of ignition. Where vent lines are used, it is the user's responsibility to assure that each regulator is individually vented and that common vent lines are not used.

8. The vent connection is an escape path for flammable gas and it must be located and/or piped so that potential discharge occurs in a safe area away from buildings, open flames, collection areas, arcing devices, etc.

   Regulators that are installed indoors or in a non-vented area must be vented to the outside. Simply run vent piping from the regulator vent connection to a non-hazardous location on the outside away from *any potential* sources of ignition. The vent piping must be connection size or larger and piped to a safe area. The vent discharge must be protected against the potentials outlined in instructions #4, #8 and #9.

   For regulators equipped with internal relief valves (IRV), models 043-92 and 043-180, vent piping must be vent connection size or larger. This will assure that the vent piping will be large enough to be able to vent all of the internal relief valve discharge to atmosphere without excessive back pressure that would result in excessive pressure increase in the regulator.

   The outlet of the vent piping must allow for the free and unobstructed passage of air and gas and must be protected against the potentials listed in instructions #4, #8 and #9.

© Copyright 1997, Equimeter, Inc.

Equimeter INCORPORATED

A member of the BTR Group

Regulator General Assembly

Model 043-92

PIPE SIZES
¾" x ¾"
¾" x 1"
1" x 1"

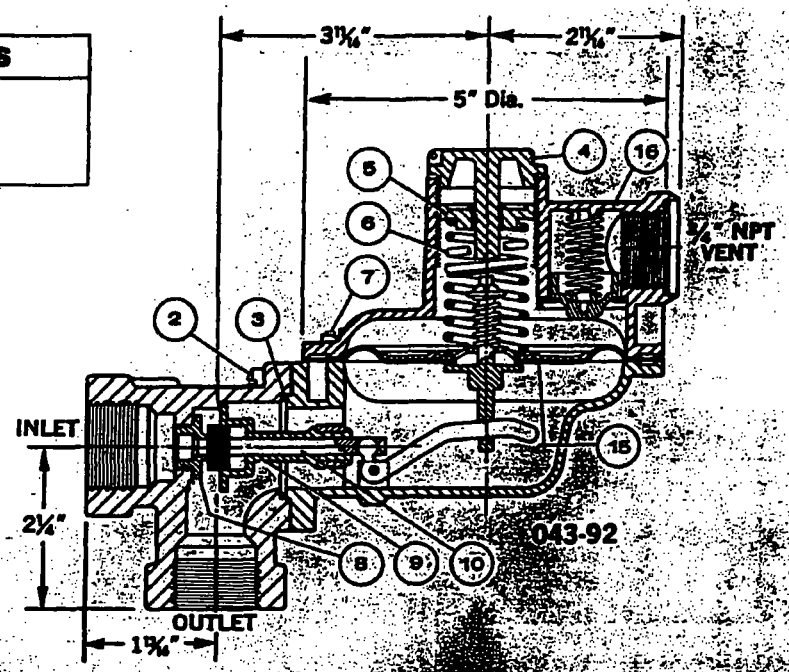

Regulator General Assembly

Model 043-182

PIPE SIZES
¾" x ¾"
¾" x 1"
1" x 1"

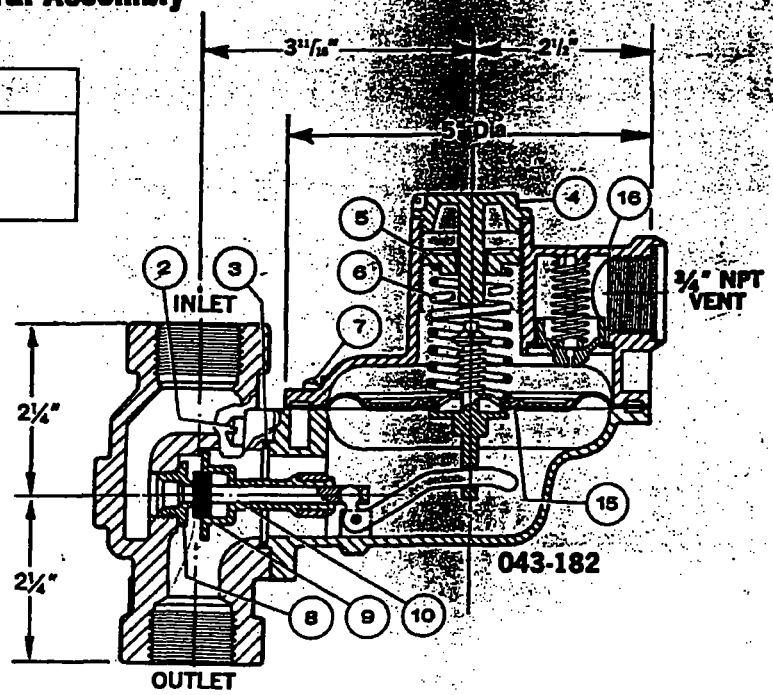

Equimeter INCORPORATED

A member of the BTR Group

043 Service Regulator Capacity Table

CAPACITY* in SCFH Natural Gas (0.6 specific gravity—14.65 psia—60°F)

Pipe Size (Inlet & Outlet) NPT	Inlet† Pressure (psi)	Outlet Pressure Range* 3½" w.c. to 28" w.c.					Outlet Pressure Range* 1 psi to 2 psi (Black Spring)				
		Orifice Size					Orifice Size				
		3/8"	5/16"	1/4"	3/16"	1/8"	3/8"	5/16"	1/4"	3/16"	1/8"
3/8" x 3/8"	½	—	—	60	—	—	—	—	—	—	—
	1	—	—	100	—	—	—	—	—	—	—
	2	—	—	200	75	—	—	—	—	—	—
	3	—	—	240	100	50	—	125	100	60	50
	5	—	—	260	220	70	—	250	200	125	80
	10	—	—	300	270	100	—	400	250	200	125
	20	—	—	350	300	200	—	450	450	400	225
	40	—	—	350	350	230	—	—	450	450	375
	60	—	—	—	350	270	—	—	500	500	450
	80	—	—	—	—	300	—	—	—	550	500
	100	—	—	—	—	300	—	—	—	—	550
	125	—	—	—	—	300	—	—	—	—	550
3/8" x ½" ½" x ½" ←	½	—	140	130	—	—	—	—	—	—	—
	1	—	180	160	130	—	—	—	—	—	—
	2	—	250	210	160	120	—	—	—	—	—
	3	—	310	270	200	140	—	120	100	60	50
	5	—	380	370	250	160	—	250	200	125	80
	10	—	450	450	420	250	—	400	250	200	125
	20	—	500	500	450	450	—	500	450	400	250
	40	—	—	500	500	500	—	650	650	600	400
	60	—	—	—	500	500	—	—	650	650	500
	80	—	—	—	—	500	—	—	—	650	650
	100	—	—	—	—	500	—	—	—	—	650
	125	—	—	—	—	500	—	—	—	—	650
½" x ¾" ¾" x ¾"	½	100	—	—	—	—	—	—	—	—	—
	1	200	180	—	—	—	—	—	—	—	—
	2	300	250	200	—	—	—	—	—	—	—
	3	500	400	250	—	—	125	125	100	60	50
	5	800	750	500	300	—	250	250	200	125	80
	10	800	800	600	450	200	400	400	250	200	125
	20	—	800	700	650	400	500	500	450	400	250
	40	—	—	800	700	650	—	700	650	650	400
	60	—	—	—	800	700	—	—	900	900	650
	80	—	—	—	—	700	—	—	—	900	750
	100	—	—	—	—	800	—	—	—	—	900
	125	—	—	—	—	800	—	—	—	—	900
½" x 1" ¾" x 1" 1" x 1"	½	150	150	100	90	70	—	—	—	—	—
	1	200	190	125	100	90	—	—	—	—	—
	2	300	250	200	125	110	—	—	—	—	—
	3	500	400	350	230	125	125	125	100	60	50
	5	900	850	600	300	150	250	250	200	125	80
	10	900	900	700	450	200	400	400	250	200	125
	20	—	900	800	650	400	750	750	500	400	250
	40	—	—	900	800	700	—	1000	900	900	400
	60	—	—	—	900	800	—	—	1000	900	650
	80	—	—	—	—	800	—	—	—	1000	900
	100	—	—	—	—	900	—	—	—	—	1000
	125	—	—	—	—	900	—	—	—	—	1000

*Capacities are based on maximum outlet pressure variations as follows:
RED and BLUE Springs—1" w.c. droop or 2" w.c. boost (−1" w.c. or +2" w.c.)
GREEN Spring—2" w.c. droop (−2" w.c.) ORANGE Spring—3" w.c. droop (−3" w.c.) BLACK Spring—10% droop

†½ psi, 1 psi and 2 psi Inlet Pressures apply only to RED and BLUE Springs.

Last capacity figure in each column indicates maximum allowable inlet pressure (except for emergency conditions).

Note: The above performance data is based on normal testing at 70°F flowing temperature. Changes in performance can occur at extreme low flowing temperatures.

Equimeter INCORPORATED

A member of the BTR Group

Maximum Emergency Pressure

The maximum pressure the regulator inlet may be subjected to under abnormal conditions without causing damage to the regulator is the maximum inlet pressure + 50 psi.

The maximum pressure the diaphragm may be subjected to without causing damage to the internal parts of the regulator is the set-point + 3 psi (set-point is defined as the outlet pressure a regulator is adjusted to deliver).

If either of the above pressure limits are exceeded, the regulator must be taken out of service and inspected. Damaged or otherwise unsatisfactory parts must be repaired or replaced.

The maximum pressure that can be safely contained by the diaphragm case is 10 psi (safely contained means no leakage as well as no bursting).

Before using any of the above data, make sure this entire section is clearly understood.

Orifice Size	Maximum Inlet Pressure For Full Capacity Relief	
	A	B
1/8"	26 psig	73 psig
3/16"	9 psig	24 psig
1/4"	5 psig	14 psig
5/16"	4 psig	11 psig
3/8"	3 psig	8 psig

A—Outlet pressure will not exceed 1 psi.

B—Outlet pressure will not exceed 2 psi.

Note: Above data based on 5"-8½" w.c. (blue) spring.

Typical Internal Relief Valve (IRV) Performance Curves

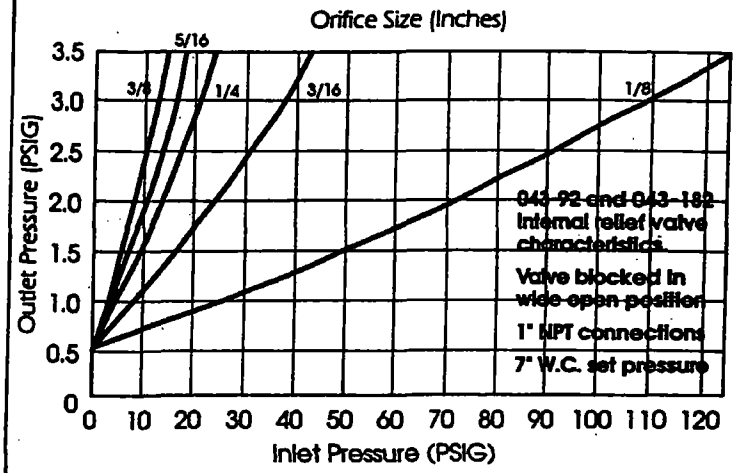

Other Gases

The 043 Service Regulator is mainly used on natural gas services; however, this regulator will perform equally as well on other gases. When using the 043 Regulator on other gases, the regulator capacities must be adjusted using the following correction factors.

Type of Gas	Correction Factor
Air (specific gravity 1.0)	0.77
Propane (specific gravity 1.53)	0.63
1350 BTU Propane-Air Mixture (specific gravity 1.20)	0.71
Nitrogen (specific gravity 0.97)	0.79
Dry CO_2 (specific gravity 1.52)	0.63

For other non corrosive gases use the following formula:

$$\text{Correction Factor} = \sqrt{\frac{0.60}{\text{Specific gravity of the gas}}}$$

For use with gases not listed above, please contact your Equimeter representative or Industrial Distributor for recommendations.

Equimeter INCORPORATED

A member of the BTR Group

9 For outdoor installations, it is recommended that the regulator be installed so that the regulator vent faces downward to avoid the potential for water or other foreign matter entering the regulator and interfering with the proper operation of the regulator.

CAUTION

Regulators are pressure control devices with numerous moving parts subject to wear that is dependent upon particular operating conditions. To assure continuous satisfactory operation, a periodic inspection schedule must be adhered to with the frequency of inspection determined by the severity of service and applicable laws and regulations.

Servicing

1 For access to valve (10) and orifice (8), remove screws (2) and remove diaphragm case assembly from body. Orifice (8) unscrews from body.

When removing and replacing the orifice be careful to use a ¾" hex socket wrench that is in good condition. This socket must be sharp, free of wear and not rounded. When replacing orifice (8), tighten to 20 to 25 ft.-lbs. of torque. Use a moderate amount of sealant, such as Best-O-Life or Rector Seal #5.

2 To replace diaphragm assembly, remove spring, remove flange screws (7), and remove top diaphragm case (16) or (16a). Make certain all parts are reassembled in their correct order and all screws and joints are tightened evenly and firmly, to 3 to 6 ft.-lbs. of torque. Make certain Tetraseal (3) is in position.

3 Upon completing reassembly, make certain that the regulator is free of leaks.

Over Pressurization Protection

Protection must be provided for the downstream piping system and the regulator's low pressure chambers to assure against the potential over pressurization due to a regulator malfunction or a failure of the regulator to lock-up. The allowable over pressurization is the lowest of the maximum pressures permitted by federal codes, state codes, Equimeter Bulletin RDS-1498 or other applicable standards. The method of providing over pressure protection could be a relief valve, a monitor regulator, a shut off device or any similar device.

Temperature Limits

The 043 Service Regulator can be used for flowing temperatures from −20°F. to 150°F.

Buried Service

The 043 Service Regulator *is not* recommended for buried service.

Condensed Parts List

Ill. No.	Description	Part Number
2	Hex Washer Hd., Indented, Screw, ¼"-20 x ⅝"	950139
3	Tetraseal (or O-Ring) 1¼" x 1 7/16"	904076
4	Seal Cap	143-08-005-03
5	Adjustment Spring Button	143-08-009-00
6	Spring—See Table	—
7	Fil. Hd. Stl. Mach. Screw, #10-24 x ½"	919755
8	Orifice, ⅜" aluminum	143-08-023-18
	Orifice, 5/16" aluminum	143-08-023-17
	Orifice, ¼" aluminum	143-08-023-16
	Orifice, 3/16" aluminum	143-08-023-15
	Orifice, ⅛" aluminum	143-08-023-14
9	Deflector	143-08-078-00
10	Valve & Stem Assembly	143-08-511-00
15	Diaphragm Assembly with Internal Relief Valve (IRV)—use with Ill. No. 16 Top Diaphragm Case only	143-08-550-01
15a	Standard Diaphragm Assembly—use with either 16 or 16a Top Diaphragm Case	143-08-550-00
16	Top Diaphragm Case with ¾" vent and vent flapper valve	143-08-503-00
16a	Top Diaphragm Case with ¾" vent	143-08-003-01

Spring Ranges

Outlet Pressure Ranges	Spring Color	Spring Part Number
3½" to 6½" w.c.	Red	143-08-021-00
5" to 8½" w.c.	Blue	143-08-021-01
6" to 14" w.c.	Green	143-08-021-02
12" to 28" w.c.	Orange	143-08-021-03
1 psi to 2 psi	Black	143-08-021-06

Regulator General Assembly

Model No.	Type	Vent Size	Pipe Sizes	Body
043-90	Standard Regulator	¼"	¾" & 1"	Angle
043-91	Standard Regulator	¾"		
043-92	Regulator with Internal Relief (IRV)	¾"		
043-180	Standard Regulator	¼"	⅜", ½", ¾" & 1"	Straight Through
043-181	Standard Regulator	¾"		
043-182	Regulator with Internal Relief (IRV)	¾"		

Equimeter INCORPORATED

A member of the BTR Group

General Safety Instructions for Gas Regulators

Keep this sheet for future reference.

AVOID OVERPRESSURIZATION

WARNING: Do not exceed the regulator's pressure ratings. Over-pressuring the regulator could damage it internally, cause leaks, or even result in personal injury by bursting a pressure containing part.

1. Refer to the appropriate REGULATOR INSTALLATION AND MAINTENANCE INSTRUCTIONS bulletin for pressure ratings. The regulator outlet has a lower pressure rating than the inlet. Do not expose the regulator outlet or control line to inlet pressure.

2. Regulators manufactured for use with a control line and having a diaphragm chamber sealed from the body outlet chamber may be used as the upstream regulator in a monitor set. The sealed body outlet chamber can be exposed to pressure higher than the normal outlet pressures. Do not use a regulator manufactured for internal control nor a regulator having a control line with an open throat as the upstream regulator in a monitor set. Doing so could result in a system failure where damage could occur along with personal injury.

3. Overpressure protection such as relief valves, automatic shutoff valves, monitors, etc. are recommended to protect both the inlet and outlet side of the regulator. If the inlet pressure is or could be greater than the emergency pressure rating for the regulator, outlet, or diaphragm chamber, install suitable over-pressure protection to prevent regulator damage and possible personal injury (see "Maximum Emergency Pressures" in the REGULATOR INSTALLATION AND MAINTENANCE INSTRUCTIONS bulletin). The use of an internal or external relief valve is recommended for installations subjected to no flow for extended periods of time, such as pilotless ignition systems.

PRIOR TO INSTALLATION

1. Examine the regulator for shipping damage.
2. Check the name plate data. Make sure the regulator conforms with what was ordered.
3. Provide suitable shut-off valves, conveniently located.
4. Protect the regulator from damage by vehicles or other outside sources.
5. The inside of the regulator and piping must be clean. Remove all dirt and debris before installing the regulator. Failure to do this could result in regulator damage and improper operation. Where there are dirt problems in the gas, it may be necessary to install a suitable filter or strainer upstream from the regulator.
6. Remove all shipping plugs and covers from the regulator before installing. Do not let dirt get inside.

TYPICAL INSTALLATION

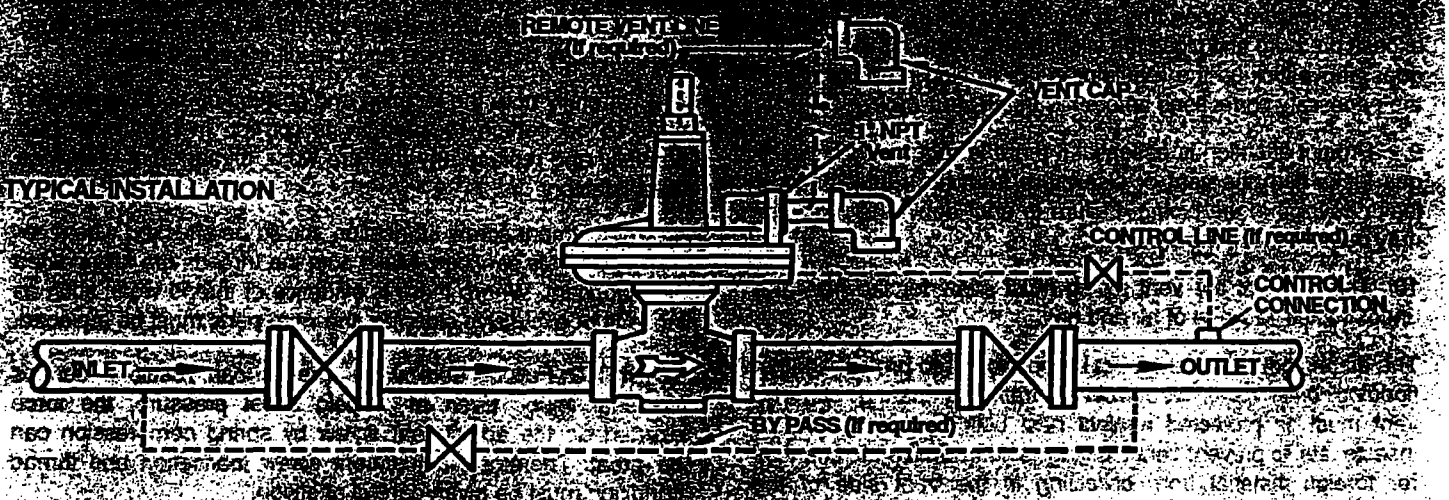

INSTALLATION AND START-UP

1. Follow the appropriate REGULATOR INSTALLATION AND MAINTENANCE INSTRUCTIONS bulletin for the regulator when installing, operating, maintaining and servicing it. KEEP THE BULLETIN FOR FUTURE REFERENCE. If any of these instructions are not understood or there are any questions, phone your Equimeter sales office.

2. Installation, operation, maintenance, and service must be done only by qualified persons.

3. Comply with all pertinent rules, regulations and codes (federal, state, local and insurance).

4. Make sure the inlet and outlet connections are correct. High pressure connects to the regulator inlet. The flow arrow on the body must point downstream.

5. Screwed connections must conform with good piping practice and be free of excess thread engagement (per ANSI B1.20.1). Apply pipe joint sealant to male threads only.

6. Tighten flanged joints evenly.

7. Before start-up, make sure the regulator is correctly connected, adequately supported and pipe joints are tight.

2 WAY
Aluminum Body Solenoid Valves

Direct Acting and Pilot Operated • 3/8" to 3" N.P.T.

BOM# 710

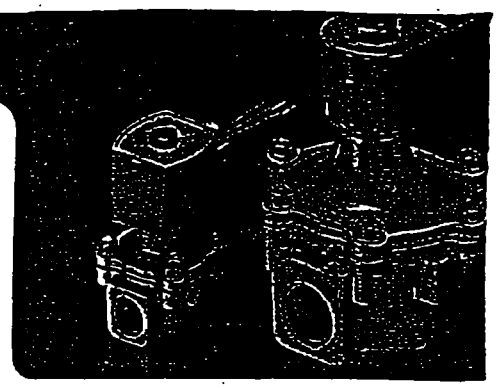

Specifications

Solenoid Enclosures: Valves listed in this series have either Red-Hat metal solenoid enclosures or Red-Hat II molded epoxy solenoids. Red-Hat II valves are identified by the change letter "G" in their catalog numbers, e.g., 8040G10, and are shown in red.

Standard Enclosures:
Red-Hat — Type 1 General Purpose
Red-Hat II — Types 1, 2, 3, 3S, 4 and 4X Combination General Purpose and Watertight.

Optional Enclosures:
Red-Hat — Types 3, 7 and 9 Combination Explosionproof and Raintight. To order, add prefix "EF" to catalog number. (Except Catalog Numbers EF8215A40, EF8215A90 and EF8215B93)'
Red-Hat II — Types 3, 3S, 4, 4X, 6, 6P, 7 and 9 Combination Explosionproof and Watertight. To order, add prefix "EF" to catalog number.

Additional constructions are available. The Optional Electrical Features Section, page 11, contains descriptions and ordering information for: Open Frame Solenoids • Junction Box Enclosures • Panel Mount Constructions.

Electrical: Standard Voltages:
24, 120, 240, 480 volts, AC, 60 Hz (or 110, 220 volts, AC, 50 Hz)
6, 12, 24, 120, 240 volts, DC
Other voltages are available when required.

Coil: Continuous duty molded Class B or F as listed.

Nominal Ambient Temperature Ranges: Red-Hat and Red-Hat II Valves/AC Construction: 32°F to 125°F
Red-Hat Valves/DC Construction: 32°F to 77°F (104°F occasionally).
Red-Hat II Valves/DC Construction: 32°F to 104°F
Refer to Engineering Section for details.

Valve Parts in Contact with Fluids:
Body — Aluminum
Seals, Diaphragms and Discs — Buna "N"
Disc Holder — Nylon (10.1 and 11.6 watt Normally Open only)
Core Guide — Acetal
Rider Rings — Filled Teflon*
Core and Plugnut — 430F s.s., Silicone Steel (8215A40 and 8215A90)
Springs — 302 s.s.
Shading Coil — Copper

Approvals: CSA certified. UL listed as indicated. FM approved (Normally Closed valves only, except Catalog Numbers 8215A90 and 8215A40). Refer to Engineering Section for details.

Ordering Information:
Important: We must have catalog number, voltage and Hertz, operating pressure and fluid handled. Use strainers with solenoid valves.

*DuPont Co. trademark

SPECIFICATIONS

Pipe Size (ins.)	Orifice Size (ins.)	Cv Flow Factor	Operating Pressure Differential (psi) Min.	Max. AC Air-Fuel Gas	Max. DC Air-Fuel Gas	Max. Fluid Temp. °F. AC	Max. Fluid Temp. °F. DC	Standard Solenoid Enclosures Red-Hat–Type 1 Red-Hat II–Types 1, 2, 3, 3S, 4 and 4X Aluminum Body: Catalog Number	Constr. Ref. No.	UL Listing	Watt Rating/ Class of Coil Insulation ⓐ AC	DC
NORMALLY CLOSED (Closed when de-energized)												
1/8	3/8	1.0	0	15	—	125	—	8040G6	11	o	6.1/F	—
1/4	3/8	1.1	0	15	—	125	—	8040G7	11	o	6.1/F	—
3/8	3/8	1.2	0	15	—	125	—	8040G8	11	o	6.1/F	—
3/8	3/4	3.4	0	50	25	125	104	8215G10	2	o	10.1/F	11.6/F
3/8	3/4	3.5	5	125	125	125	104	8215G1ⓑ	1	o	6.1/F	11.6/F
~~1/2~~	~~3/4~~	~~5.4~~	~~0~~	~~2~~		~~125~~		~~8040G22~~	~~13A~~	~~o~~	~~10.1/F~~	
1/2	3/4	4.4	0	50	25	125	104	8215G20	2	o	10.1/F	11.6/F
~~1/2~~	~~3/4~~	~~4.8~~	~~5~~	~~125~~	~~125~~	~~125~~	~~104~~	~~8215G2ⓑ~~	~~1~~	~~o~~	~~6.1/F~~	~~11.6/F~~
3/4	3/4	9.5	0	2	—	125	—	8040G23	13B	o	10.1/F	—
3/4	3/4	5.1	0	50	25	125	104	8215G30	4	o	10.1/F	11.6/F
3/4	3/4	5.1	5	125	125	125	104	8215G3ⓑ	3	o	6.1/F	11.6/F
1	1 5/8	21	0	25	25	125	77	8215B50 ⓒ	6	o	15.4/F	14.9/B
1 1/4	1 5/8	32	0	25	25	125	77	8215B60 ⓒ	6	o	15.4/F	14.9/B
1 1/2	1 5/8	35	0	25	25	125	77	8215B70 ⓒ	6	o	15.4/F	14.9/B
2	2 3/32	60	0	25	15	125	77	8215B80 ⓒ	7	o	15.4/F	14.9/B
2 1/2	3	117	0	5	—	125	—	8215A90	8	o	28.2/F	—

F64

Air Intake Filters and Filter Silencers

BOM# 711

Air Intake Filter and Filter Silencer

The Series F64 Air Intake Filter and Filter Silencer is designed to mount directly on the inlet of an engine, blower or compressor. It will provide 16dB to 20dB noise reduction and the paper filter media has an efficiency of 99% on 1 micron particles.

SERVICE LIFE & CLEANING: The service life of the element is dependent upon the surrounding environment and cannot be predicted.

To prevent COLLAPSING of the filter element, STODDARD SILENCERS recommends the differential pressure across the filter element NOT exceed 15 inches of water column. Positive indication that the element requires cleaning or replacement can be provided with STODDARD SILENCERS model A40-108 Pressure Drop Indicator, at an extra charge.

To extend service life, rap element gently to dislodge accumulated dirt. An alternate method is to direct compressed air (75 PSIG max) through the element opposite to the direction of air flow. THE FILTER ELEMENT MUST EVENTUALLY BE REPLACED.

ALTERNATE FILTRATION MEDIA
AVAILABLE FOR F64

Cleanable Polyester Felt - 99% on 3 micron particles
Galvanized Wire Mesh - 90% on 10 micron particles
(when oil wetted)

Typical Attenuation Curve

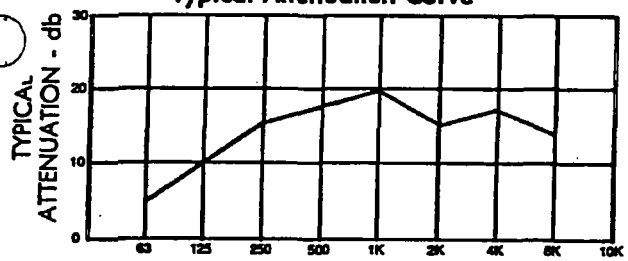

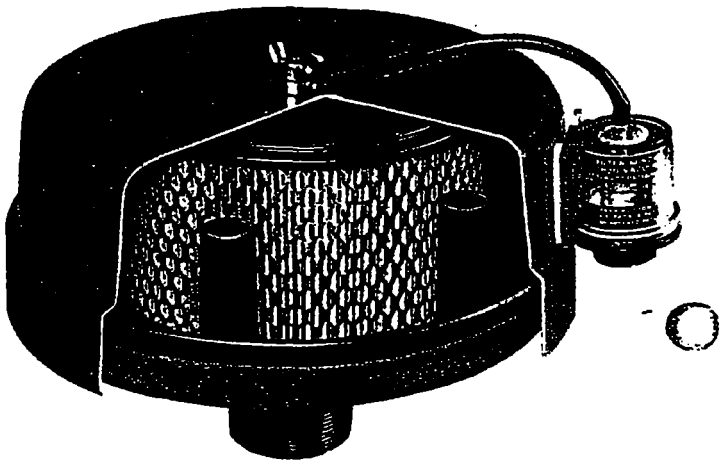

F64 shown with optional A40-108 Pressure Drop Indicator.

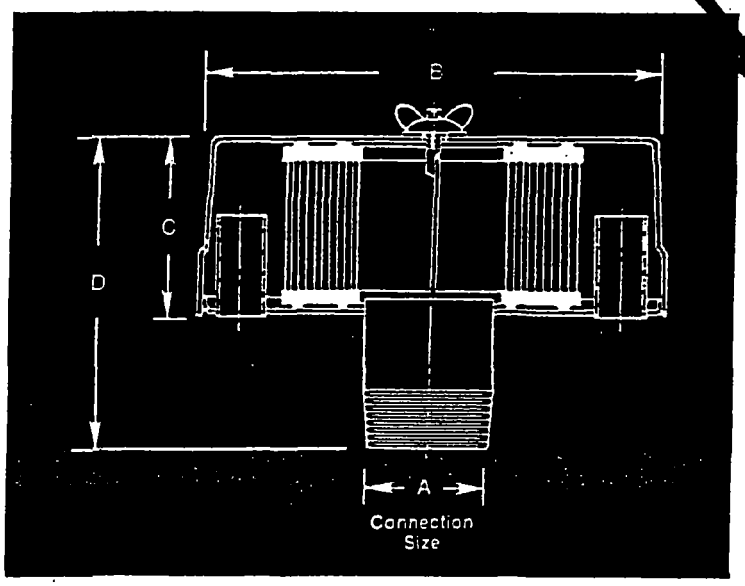

F64 Series

Model	A Connection Size	B	C	D	Weight	Price	Replacement Element
F64-0	1" NPT	10	3	7	35	9	F8-103
F64-1/2	1-1/2" NPT	10	4	7	80	9	F8-103
F64-2	2" NPT	10	4	7	135	10	F8-103
F64-2½	2-1/2" NPT	10	4	7	180	10	F8-103
F64-3	3" NPT	16	5	8	285	20	F8-109
F64-4	4" NPT	16	5	8	520	20	F8-109
F64-5	5" NPT Flg	16	5	8	750	28	F8-109
F64-6	6" Flange	20	5	8	1075	40	F8-110
F64-8	8" Flange	20	10	18	1800	50	F8-111
F64-10	10" Flange	26	15½	20	3335	85	F8-137
F64-12	12" Flange	26	15½	20	3575	100	F8-137
F64-14	14" Flange	26	15½	20	3555	115	F8-137

Sizes 10", 12" and 14" are FILTERS only

DR 404
Regenerative Blower

BOM# 712

FEATURES

- Manufactured in the USA
- Maximum flow 98 SCFM
- Maximum pressure 56" WG
- Maximum vacuum 3.6" Hg
- 1.0 HP standard
- Blower construction—cast aluminum housing, impeller and cover
- Inlet and outlet internal muffling
- Noise level within OSHA standards
- Weight: 61 lbs. (27.5 Kg)

ACCESSORIES

- External mufflers
- Slip-on flanges
- Intake filters
- For details see Accessories Section

OPTIONS

- Smaller horsepower motors
- 575-volt and explosion-proof motors
- Surface treatment or plating
- Single or three phase motors
- Sealed blower assembly
- Belt drive (motorless) model; for details see Remote Drive Section

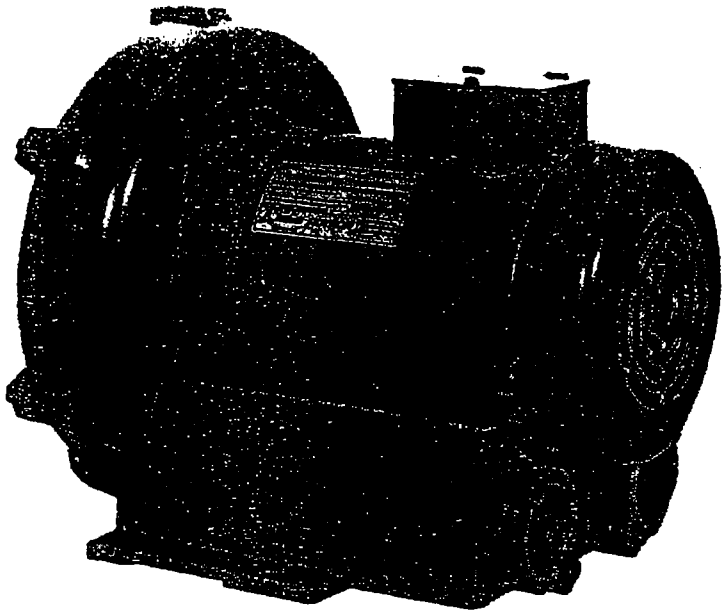

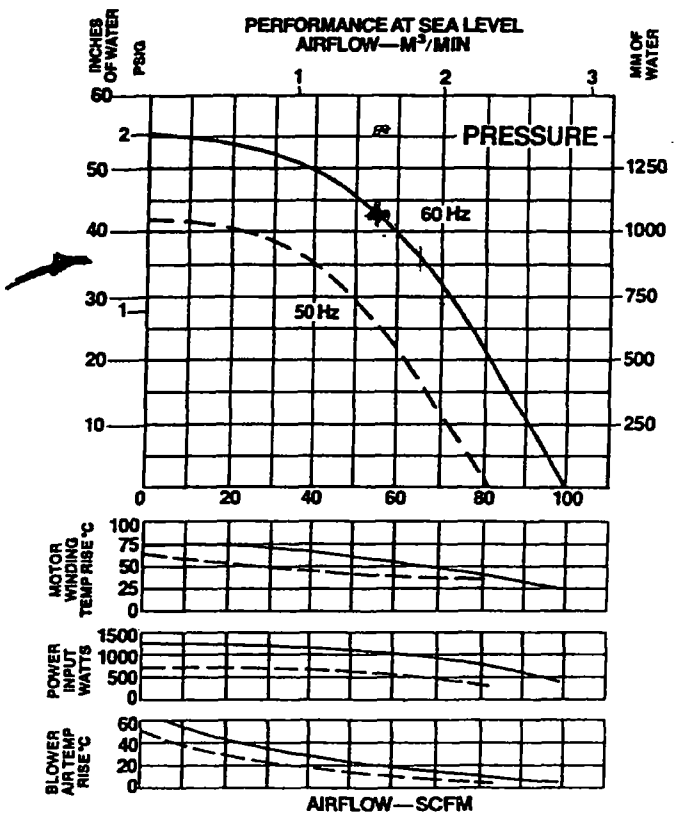

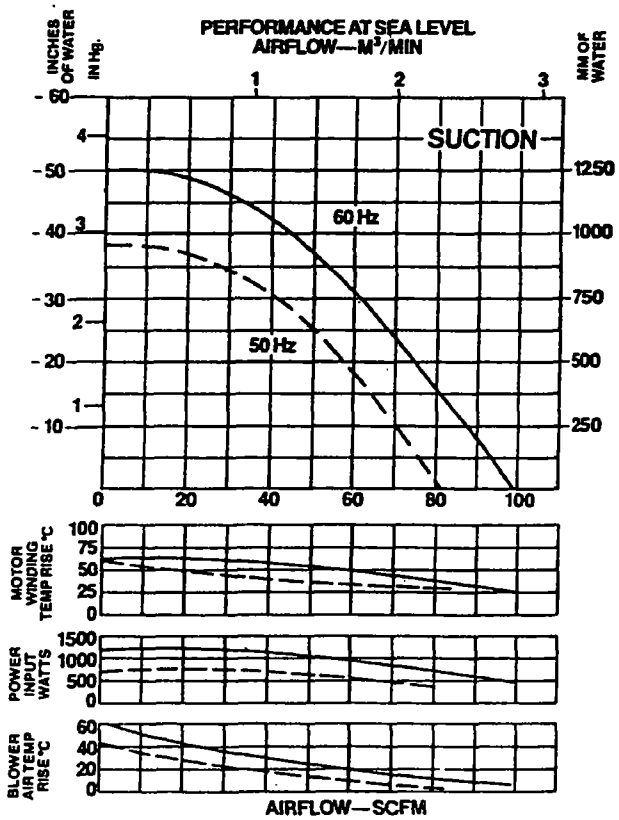

EG&G ROTRON, SAUGERTIES, N.Y. 12477 • 914/246-3401

BOM# 712

DR 404
Regenerative Blower

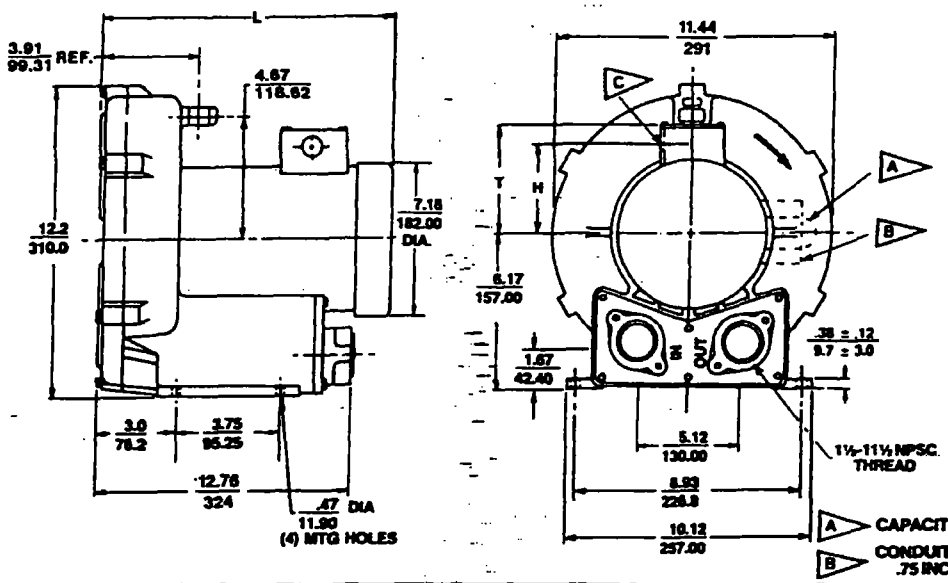

DIMENSIONS: IN. / MM
TOLERANCES: .XX ± .08 / 2.0
.XXX ± .030 / .800
(UNLESS NOTED)

A CAPACITOR LOCATION TEFC, 1 PHASE MOTORS

B CONDUIT BOX LOCATION XP MOTOR. CONTAINS .75 INCH PIPE TAP CONNECTOR HOLE

C TERMINAL BOX TEFC MTR. .87 INCH CONN. HOLE

Model	L (in.)±.30	L (mm)±8	T (in.)±.06	T (mm)±2	H (in.)±.06	H (mm)±2
DR404AL72M	13.50	343	5.25	133	4.25	108
DR404AR72M	15.55	395	6.75	171	5.25	133
DR404AL86M	13.50	343	5.25	133	4.25	108
DR404AL58M	14.50	343	5.25	133	4.25	108
DR404AR58M	16.43	417	6.75	171	5.25	133

NOTES:
Diecast dimensions may differ.
Consult factory for diecast dimensions.
Specifications subject to change without notice.

SPECIFICATIONS

MODEL	DR404AL72M	DR404AR72M	DR404AL86M	DR404AL58M	DR404AR58M
Part No.	037406	037409	037408	037407	037410
Motor Enclosure Type	TEFC	XP	TEFC	TEFC	XP
Motor Horsepower	1.0	1.0	1.0	1.0	1.0
Voltage[1]	200-230/460	230/460	575	115/230	115/230
Phase	3	3	3	1	1
Frequency[1] (Hz)	60	60	60	60	60
Insulation Class[2]	F	B	F	F	B
NEMA Rated Motor Amps	3.75-3.4/1.7	3.4/1.7	1.4	12/6	12/6
Service Factor	1.15	1.0	1.15	1.25	1.0
Locked Rotor Amps	19/9.5	19/9.5	7.6	70/35	70/35
Max. Blower Amps	3.42/1.71	3.42/1.71	1.4	14.5/7.25	14.5/7.25
Recommended NEMA Starter Size	00/00	00/00	00	0/00	0/00
Weight (lbs/Kg)	61/28	76/35	61/28	75/34	89/40
Blower Limitations for Continuous Duty (60 Hz/50 Hz)					
Max. Pressure-In. of water	56/42	56/42	56 (60 Hz)	56/42	56/42
Max. Suction-In. of water	49/38	49/38	49 (60 Hz)	49/38	49/38
Min. Flow-Pressure-SCFM	0/0	0/0	0 (60 Hz)	0/0	0/0
Min. Flow-Suction-SCFM	0/0	0/0	0 (60 Hz)	0/0	0/0

[1]All 3 phase motors are factory tested and certified to operate on 200-230/460 VAC-3 ph-60 Hz and 220-240/380-415 VAC-3 ph-50 Hz. All 1 phase motors are factory tested and certified to operate on 115/230 VAC-1 ph-60 Hz and 220-240 VAC-1 ph-50 Hz.

[2]Maximum operating temperatures: Motor winding temperature (winding rise plus ambient) should not exceed 140°C for Class F insulation or 110°C for Class B insulation. Blower outlet air temperature should not exceed 140°C (air temperature rise plus ambient).

AMETEK®
ROTRON TECHNICAL MOTOR DIVISION
REGENERATIVE BLOWER GROUP

75 North Street
Saugerties, New York 12477
Phone: (914) 246-3401
Fax: (914) 246-3802

GENERAL INSTALLATION INSTRUCTIONS

Rotron Regenerative Blowers

Installation Instructions for SL, DR, EN, CP, and HiE Series Blowers

1. **Bolt It Down** - Any blower must be secured against movement prior to starting or testing to prevent injury or damage. The blower does not vibrate much more than a standard electric motor.

2. **Filtration** - All blowers should be filtered prior to starting. Care must be taken so that no foreign material enters the blower. If foreign material does enter the blower, it could cause internal damage or may exit at extremely high velocity.

   Should excessive amounts of material pass through the blower, it is suggested that the cover(s) and impeller(s) be removed periodically and cleaned to avoid impeller imbalance. Impeller imbalance greatly speeds bearing wear, thus reducing blower life. Disassembling the blower will void warranty, so contact the factory for cleaning authorization.

3. **Support the Piping** - The blower flanges and nozzles are designed as connection points only and are not designed to be support members.

   Caution: Plastic piping should not be used on blowers larger than 1 HP that are operating near their maximum pressure or suction point. Blower housing and nearby piping temperatures can exceed 200°F. Access by personnel to the housing or nearby piping should be limited, guarded, or marked, to prevent danger of burns.

4. **Wiring** - Blowers must be wired and protected/fused in accordance with local and national electrical codes. All blowers must be grounded to prevent electrical shock. Slo-Blo or time delay fuses should be used to bypass the first second of start-up amperage.

5. **Pressure/Suction Maximums** - The maximum pressure and/or suction listed on the model label should <u>not be exceeded</u>. This can be monitored by means of a pressure or suction gage (available from Rotron), installed in the piping at the blower outlet or inlet. Also, if problems do arise, the Rotron Application Engineering staff will need to know the operating pressure/suction to properly diagnose the problem.

6. **Excess Air** - Bleed excess air off. DO NOT throttle to reduce flow. When bleeding off excess air, the blower draws <u>less</u> power and runs cooler.

   Note: Remote Drive (Motorless) Blowers - Properly designed and installed guards should be used on all belts, pulleys, couplings, etc. Observe maximum remote drive speed allowable. Due to the range of uses, drive guards are the responsibility of the customer or user. Belts should be tensioned using belt gauge.

KINEMAX® Gas or Oil Burners

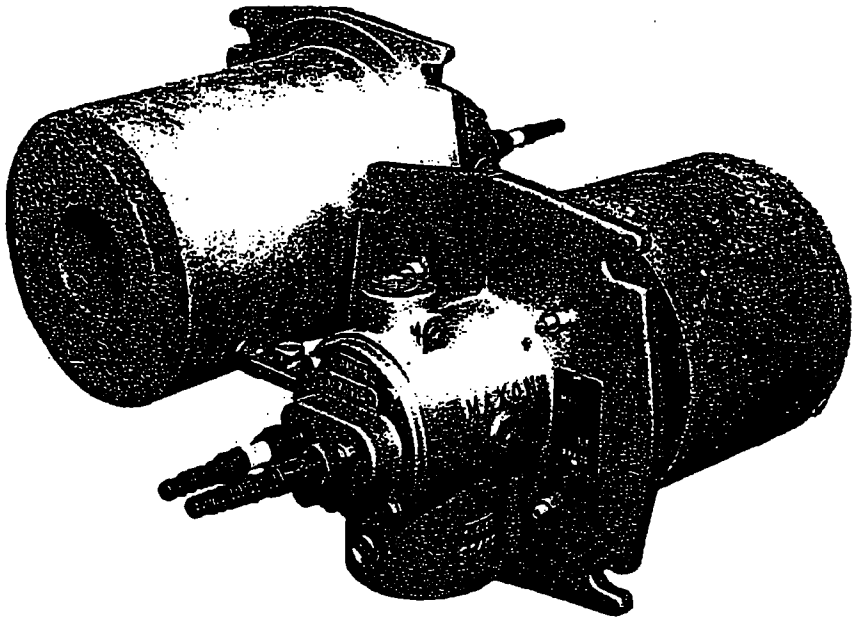

1-1/2" Series "G" KINEMAX® Burners with spark ignitor, optional pilot gas adjustable orifice, and arranged for UV scanner mounting. Standard refractory block is shown in background and burner equipped with seal and support assembly in foreground.

- **Stir up the heat in your furnace** with exit velocities up to 275 ft/sec (185 MPH) to promote workload heat penetration and better temperature uniformity
- **Operate on-ratio, with excess fuel, or with excess air** to meet the specific demands of your combustion process needs
- **Burn most clean, low pressure gaseous fuels or #2 light oil** with only 8-16 ounce combustion air pressures
- **48:1 turndown capability** promotes faster bring-up times without temperature override
- **Maximum application flexibility provided** with six different sizes and capabilities up to 8,400,000 Btu/hr per burner
- **Lower fuel consumption** by using preheated combustion air up to 800°F (427°C)
- **Lightweight refractory-less burner with stainless steel combustion sleeve** for air heating applications
- **Alternate refractory block materials** for chamber temperatures up to 3000°F (1649°C)

BOM# 713/714

MAXON®

CORPORATION 201 East 18th Street, P.O. Box 2068, Muncie, Indiana, 47307-0068. Phone: (317) 284-3304

KINEMAX® Burners

BOM# 713

Principle of Operation

With Series "G" KINEMAX® Burners, combustion air enters the burner body and is swirled out into the burner block (or sleeve) through the internal air orifice plate.

Low pressure gas enters the burner body and exits to the block through machined ports in the gas nozzle.

The gas and air are intimately mixed in the cast burner block tunnel. The spark ignitor is positioned to intersect the fuel/air mixture directly in front of the nozzle face.

Pilot gas is introduced directly behind the gas ports in the gas nozzle and essentially flows through to the burner block through the same ports as does the main gas. The "pilot" capacity is the minimum firing rate of the KINEMAX® Burner.

With Series "C" KINEMAX® Burners, combustion air enters the burner body and is swirled out into the burner block (or sleeve) through the air orifice plate. **Low pressure gas** enters the body and exits to the block/sleeve through the gas tube and nozzle.

For light oil firing, the #2 oil enters through the strainer and oil tube going to the oil spinner nozzle where the stream of liquid oil is atomized by the atomizing air directly in front of the spark ignitor.

Gas for the pilot comes in through a separate inlet in the gas body and flows down the gas tube where it spins out the face of the gas nozzle in front of the spark ignitor.

Series "G" KINEMAX® Burners

for gas only firing

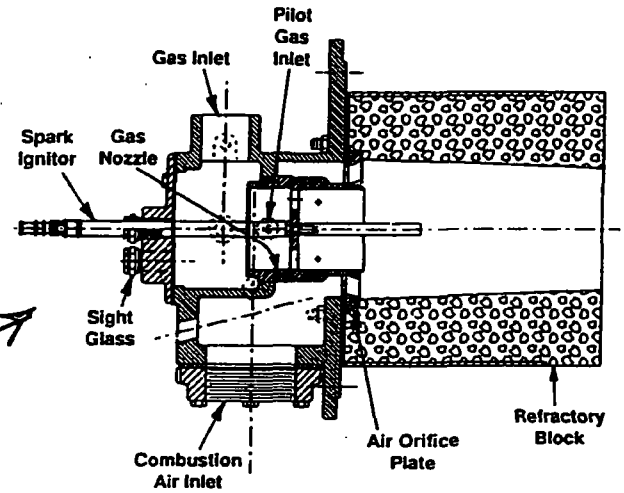

Series "C" KINEMAX® Burners

for gas/oil firing

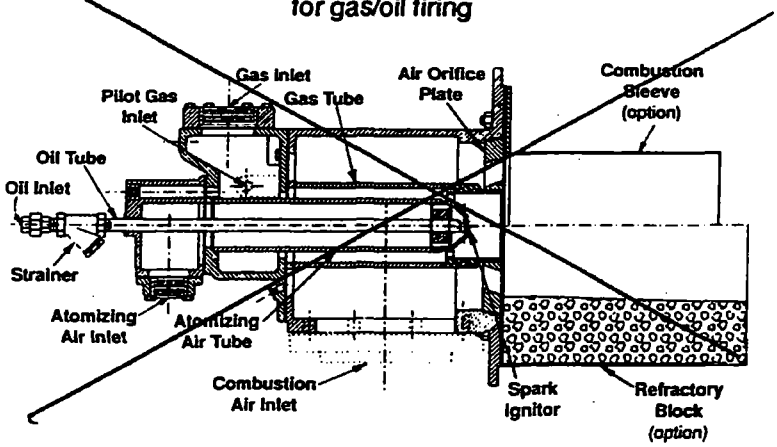

KINEMAX® Burners provide a higher velocity stream of hot combustion gases that promote circulation within your furnace or lehr, improving both temperature uniformity and workload penetration.

When used in conjunction with Maxon's MICRO-RATIO® Control Valves, a KINEMAX® Burner may be adjusted to fire on-ratio throughout the firing range or set to give a choice between "on-ratio" and "excess air", or "excess fuel" firing. As high as 4700% excess air is possible at minimum capacity.

Maxon catalog bulletin 7000 describes MICRO-RATIO® Control Valves which throttle air and fuel volumes to the KINEMAX® Burner.

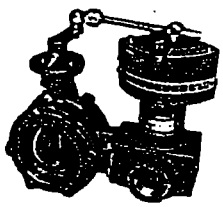

Capacity/Selection Data

All KINEMAX® Burners can be fired on-ratio, excess fuel, or with excess air. They include built-in test port connections for simplified start-up and adjustments, spark ignitor and a raw gas nozzle-mixing pilot.

Performance data is provided in the table below.

Raw gas nozzle-mixing pilot requires natural gas be regulated separately and supplied to the pilot gas inlet connection at 3-4" wc differential gas pressure. **Pilot capacity** is that which gives reliable light-off with 3" wc natural gas pressure and a combustion air differential pressure of 0.1" wc. To light off with full excess air requires considerably higher gas pressures.

Minimums are based on an air differential of 0.1" wc and include excess air. Minimums increase if on-ratio adjustment is required, or if the burner is to be ignited with full excess air.

Performance limits show the maximum excess air ratio possible at minimum firing rate.

Maximum capacity is a function of differential air pressure supplied to the burner air inlet as read between air test connection and combustion chamber. Combustion air blower rating must be sized to allow for manifolding pressure losses.

Fuel supply differential pressures (read between gas test connection and combustion chamber) are shown for both natural gas and propane.

Flame geometry is also shown in tables. Flame remains within the KINEMAX® Burner's refractory block at lower firing rates. The flame geometry shown is measured from the end of burner block at maximum rated capacity.

BOM# 113

Capacities/Specifications for 1-1/2" – 4" Series "G" KINEMAX® (Gas only) Burners

Performance Factors	Burner Size		1-1/2" Series "G"			2" Series "G"			3" Series "G"			4" Series "G"		
	Combustion air differential pressure	osi	15	11	7	15	11	7	15	11	7	15	11	7
		inch wc	26	19	12	26	19	12	26	19	12	26	19	12
Capacities (1000's Btu/hr)	Maximum		550	470	375	1000	880	700	2400	2000	1600	4000	3400	2700
	Maximum with 800°F preheated combustion air		355	305	245	650	570	455	1560	1300	1040	2600	2205	1750
	On-ratio pilot/minimum		30						40			50		
	Pilot/minimum with approximately 75% excess air		20						25			30		
	Turndown ratio with 75% excess air		27.5 :1			50 :1			96 :1			133 :1		
Performance Limits with full excess air	Minimum capacity to light burner (1000's Btu/hr)		35						50			100		
	Percent excess air		2600	2200	1800	3900	3400	2700	4700	3900	3100	3900	3300	2600
	Turndown ratio with full excess air		16 :1	13 :1	11 :1	29 :1	25 :1	20 :1	48 :1	40 :1	32 :1	40 :1	34 :1	27 :1
Combustion air volume required (SCFM) for maximum capacity (no excess air)			92	79	63	167	147	117	400	334	267	667	567	450
Differential gas pressure required for maximum capacity	Natural gas (inches w.c.)		4.2	3.1	2	4.2	3.2	2.1	3.8	2.8	1.8	3.2	2.3	1.5
	Propane gas (inches w.c.)		1.7	1.3	0.8	1.7	1.3	0.8	1.5	1.1	0.7	1.3	0.9	0.6
Flame geometry	Length (inches)		8	6	4	14	10	8	24	18	12	40	30	24
	Diameter (inches)		6	5	4	6	5	4	12	10	8	15	12	10

DR404

Maxon practices a policy of continuous product improvement. It reserves the right to alter specifications without prior notice.

Honeywell

BOM# 715

SOLID STATE SPARK GENERATOR

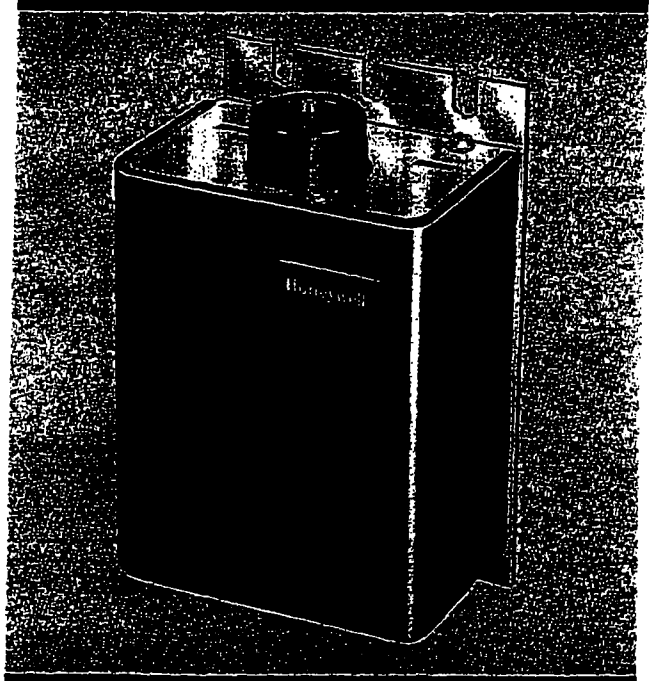

Q624A

THE Q624A IS A SOLID STATE SPARK GENERATOR (TRANSFORMER) FOR USE ON COMMERCIAL OR INDUSTRIAL GAS BURNERS.

- ☐ Ignites gas pilots with spark gaps up to 1/4 inch [6.5 millimeter].
- ☐ 15,000 peak voltage for reliable lightoff.
- ☐ Prevents detection of the ignition spark when properly applied in a flame detection system with the C7027, C7035, or C7044 Minipeeper Ultraviolet Flame Detector.
- ☐ Ignition spark and ultraviolet detector are synchronized by the alternating current supply voltage; spark occurs on one half of the ac cycle and detector operates on the opposite half cycle.
- ☐ Recommended for interrupted ignition applications only.
- ☐ Mounts in the same space used by conventional ignition transformer.
- ☐ Q624 mounting holes are the same as standard transformers (no adapter plate required).
- ☐ Impervious to humidity up to 95 percent relative humidity.
- ☐ Weighs 3 pounds [1.4 kilograms] versus 8-1/2 pounds [3.9 kilograms] for standard transformers.

P.G.
2-89

Form Number 60-2049-6
© Honeywell Inc. 1989

SPECIFICATIONS

IMPORTANT

THE SPECIFICATIONS GIVEN IN THIS PUBLICATION DO NOT INCLUDE NORMAL MANUFACTURING TOLERANCES. THEREFORE, THIS UNIT MAY NOT MATCH THE LISTED SPECIFICATIONS EXACTLY, ALSO, THIS PRODUCT IS TESTED AND CALIBRATED UNDER CLOSELY CONTROLLED CONDITIONS, AND SOME MINOR DIFFERENCES IN PERFORMANCE CAN BE EXPECTED IF THOSE CONDITIONS ARE CHANGED.

MODELS:
- Q624A Solid State Spark Generator.
  - Q624A1006 with quick-connect high voltage electrode.
- Q624A1014 with threaded terminal nut high voltage electrode.

ELECTRICAL RATINGS:
- Voltage and Frequency—120 volts, 60 Hz.
- Output Voltage—10,000 volts.
- Primary VA Rating—66 VA at 120 volts.

SPARK CHARACTERISTICS:
- Firing Rate—60 sparks per second.
- Voltage peak-to-peak—22,000 volts nonsinusoidal.
- Firing cycle peak voltage—15,000 volts ± 500 volts, open circuit.
- Energy Discharge—200 millijoules per spark.
- Discharge Time—0.3 milliseconds per spark.
- Power Dissipation—approximately 12 watts per second.

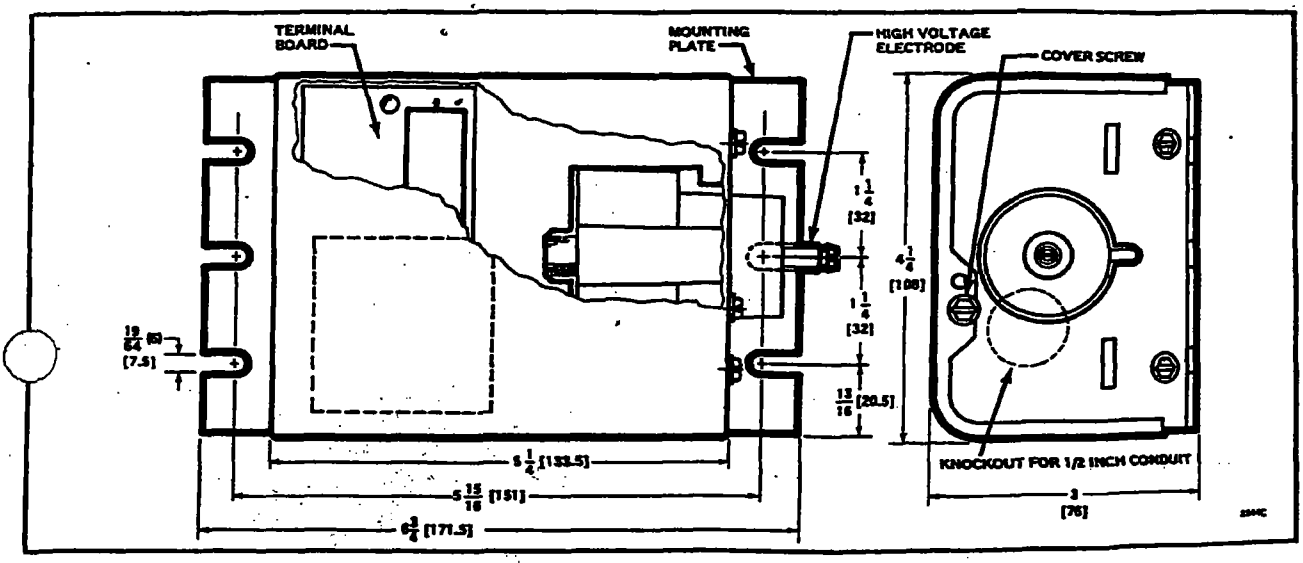

FIG 1—Q624A DIMENSIONS, IN INCHES [mm IN BRACKETS].

ORDERING INFORMATION

WHEN PURCHASING REPLACEMENT AND MODERNIZATION PRODUCTS FROM YOUR TRADELINE WHOLESALER OR YOUR DISTRIBUTOR, REFER TO THE TRADELINE CATALOG OR PRICE SHEETS FOR COMPLETE ORDERING NUMBER, OR SPECIFY—

1. **SUPER TRADELINE order number.**
2. **Accessories, if desired.**

IF YOU HAVE ADDITIONAL QUESTIONS, NEED FURTHER INFORMATION INFORMATION, OR WOULD LIKE TO COMMENT ON OUR PRODUCTS OR SERVICES, PLEASE WRITE OR PHONE:

1. **YOUR LOCAL HONEYWELL BUILDING CONTROLS OFFICE (CHECK WHITE PAGES OF PHONE DIRECTORY).**
2. **BUILDING CONTROLS DIVISION CUSTOMER SERVICE**
   HONEYWELL INC., 1885 DOUGLAS DRIVE NORTH
   MINNEAPOLIS, MINNESOTA 55422-4386 (612)542-7500

   (IN CANADA—HONEYWELL LIMITED/HONEYWELL LIMITEE, 740 ELLESMERE ROAD, SCARBOROUGH, ONTARIO M1P 2V9). INTERNATIONAL SALES AND SERVICE OFFICES IN ALL PRICIPAL CITIES OF THE WORLD.

MAXIMUM HIGH VOLTAGE LEAD LENGTH: 15 FEET [4.6 meters].
MAXIMUM SPARK GAP: 1/4 inch [6.5 millimeter].
AMBIENT TEMPERATURE RATING: -40° to +125°F [-40° to +52°C].
MAXIMUM AMBIENT HUMIDITY: 95 percent RH.
TYPE OF SERVICE: All types of gas ignition; not recommended for use when igniting oil.
MOUNTING: Surface; see Fig.1.
WEIGHT: 3 pounds [1.4 kilograms].
APPROVALS:
UNDERWRITERS LABORATORIES INC. COMPONENT RECOGNIZED: File No. MH7453, Guide No. JHYR2; tested and accepted for use in ambient temperatures ranging from -40° to +125°F [-40° to + 52°C].
CANADIAN STANDARDS ASSOCIATION CERTIFIED: File No. LR1620.
AMERICAN GAS ASSOCIATION DESIGN CERTIFIED: Certificate No. G-140.401.

ACCESSORIES:
1. C7005 Gas Pilot—with ignition electrode (see Flame Safeguard Catalog, form 70-8908).
2. Q179 Gas Pilot—with ignition electrode (see Flame Safeguard Catalog).
3. R1061012 Ignition Cable (specify length)—rated at 350°F [177°C].
4. 134666 Insulator—may be used to cover terminal, to prevent contamination, and to give added terminal protection.

INSTALLATION

WHEN INSTALLING THIS PRODUCT...

1. Read these instructions carefully. Failure to follow them could damage the product or cause a hazardous condition.
2. Check the ratings given in the instructions and on the product to make sure the product is suitable for your application.
3. Installer must be a trained, experienced, flame safeguard control technician.
4. After installation is complete, check out product operation as provided in these instructions.

CAUTION

1. Disconnect power supply before beginning installation to prevent electrical shock and equipment damage.
2. All wiring must comply with applicable local electrical codes, ordinances, and regulations.
3. Voltage and frequency of the power supply connected to this device must be 120 volts, 60 Hz.
4. Be sure the mounting chassis of the Q624A is properly grounded.

WARNING

Ground chassis at all times, even for bench testing. Otherwise device may burn out.

MOUNTING

The Q624A mounts in the same space required by a standard ignition transformer, using the same mounting holes. It may be mounted in any position.

WIRING

CAUTION

Disconnect power supply before making wiring connections to prevent electrical shock and equipment damage.

IMPORTANT

WHEN CONNECTING WIRES TO THE SCREW TERMINALS OF THIS DEVICE, WRAP THE WIRE 2/3 TO 3/4 OF THE DISTANCE AROUND THE SCREW WITHOUT OVERLAPPING. USE AN APPROPRIATELY SIZED SCREWDRIVER TO SECURELY TIGHTEN THE SCREW (AT LEAST 12 INCH-POUNDS OF TORQUE). DO NOT USE A PUSH-TYPE RATCHET SCREWDRIVER.

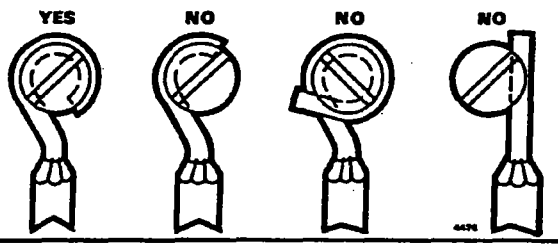

Loosen the cover screw (Fig. 1) and remove the cover. Insert 2 leads (NEC Class 1) through the knockout (Fig. 1) and connect them to the screw terminals on the terminal board, and to the terminal strip or wiring subbase of the flame safeguard control (see Table I and Fig. 2 or 3). Replace the cover and tighten the cover screw. Connect the high voltage electrode (Fig. 1) to the ignition electrode on the pilot burner using R1061012 Ignition Cable rated for continuous duty at 350°F [177°C]. THE IGNITION CABLE SHOULD NOT EXCEED 15 FEET [4.6 meters] IN LENGTH.

CAUTION

Terminals T1 and T2 on the Q624A must be connected to the proper terminals of the flame safeguard control, as given in Table 1.

If flame detector and ignition transformer are not properly connected, detector may sense ignition spark which could cause hazardous condition.

TABLE I—WIRING CONNECTIONS

FLAME SAFEGUARD CONTROL MODEL	Q624A TER-MINAL	FLAME SAFEGUARD CONTROL TERMINAL
RA890G and R4795	T1 T2	4 L2
R4126, R4127, R4140, and BC7000	T1 T2	Appropriate ignition terminal as specified on programmer instruction sheet. L2
R4150	T1 T2	L2 Appropriate ignition terminal as specified on programmer instruction sheet.

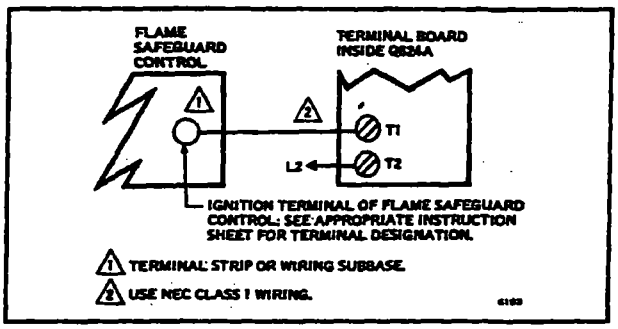

FIG 2— Q624A CONNECTIONS FOR RA890G, R4795, R4126, R4127 AND R4140.

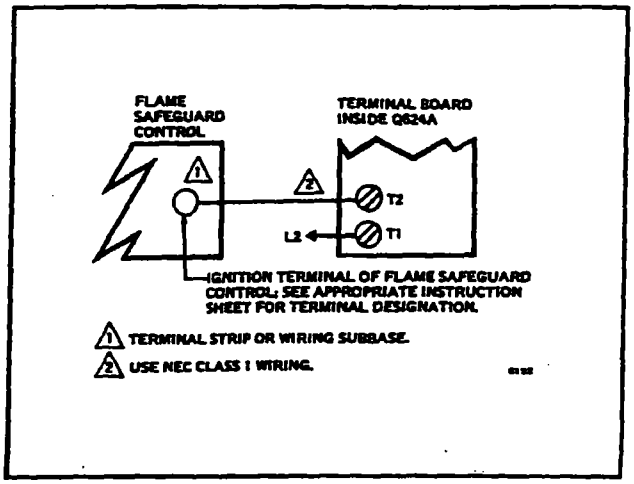

FIG 3—Q624A CONNECTIONS FOR R4150.

WARNING

A fire or explosion hazard may exist unless this device is connected as directed above. Connect 120V, 60 Hz power from the proper flame safeguard control terminals to terminals T1 and T2 of the Q624A spark generator as specified in Table 1.

CHECKOUT

After the Q624A installation has been completed, the following checks should be made to ensure that the system is working properly.

IGNITION SPARK RESPONSE TEST

The flame relay should not respond (pull in) to ignition spark. To determine flame detector sensitivity to ignition spark, perform the following steps:

1. Shut off the fuel supply to both pilot and main fuel valve manually.

2. Start system by raising controller set point or pressing start button.

3. Energize the Q624A Solid State Spark Generator so ignition spark is produced between electrode and ground.

4. Check to be sure that ignition has not occurred (there should be no flame). Repeat steps 1 through 3 until there is not flame.

5. Check the flame relay on the flame safeguard control. If the relay has not pulled in, the system is operating properly. Continue checkout with the pilot turndown test.

6. If the flame relay pulls in, stop the system, replace the Q624A, and repeat steps 2 through 5.

7. If the flame relay pulls in after replacing the Q624A, stop the system, replace the flame safeguard control, and repeat steps 2 through 5.

8. If flame relay pulls in after replacing the flame safeguard control, contact the local Honeywell branch office.

PILOT TURNDOWN TEST

Refer to the flame safeguard control instructions for the exact procedure to be used in performing the pilot turndown test.

FINAL CHECKOUT

After other checks have been completed, restore the system to normal operation and observe at least one complete cycle to be sure of satisfactory burner operation.

Honeywell Inc.
1885 Douglas Drive N.
Golden Valley, MN 55422-4386

International Sales Offices in all principal cities of the world. Manufacturing in Australia, Canada, Finland, France, Germany, Japan, Mexico, Netherlands, Spain, Taiwan, United Kingdom, U.S.A.
PRINTED IN U.S.A.

BOM# 717

BULLETIN NO. E-57

SERIES 1950

INTEGRAL EXPLOSION-PROOF PRESSURE SWITCHES

Specifications - Installation and Operating Instructions

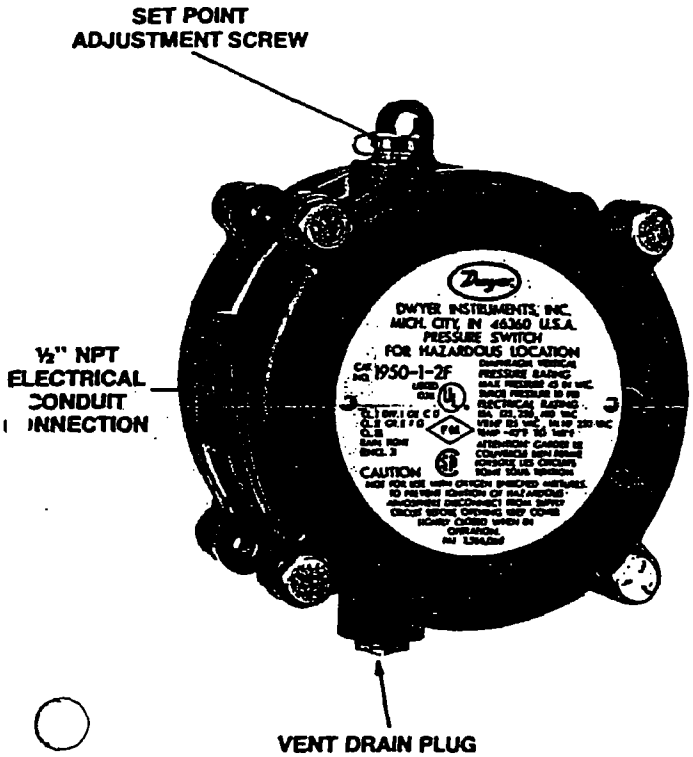

UL and CSA Listed, FM Approved For
CL. I GR. C,D – CL. II GR. E,F,G – CL. III

Model 1950 Switches: Operating ranges and dead bands.

To order specify Model Number	Operating Range Inches, W.C.	Approximate Dead Band	
		At Min. Set Point	At Max. Set Point
1950-02	0.03 to 0.10	0.025	0.05
1950-00	0.07 to 0.15	0.04	0.05
1950-0	0.15 to 0.5	0.10	0.15
1950-1	0.4 to 1.6	0.15	0.20
1950-5	1.4 to 5.5	0.3	0.4
~~1950-10~~	~~0.0 to 11.0~~	~~0.4~~	~~0.5~~
1950-20	4.0 to 20.0	0.4	0.6
Model Number	**Operating Range PSI**	**Approximate Dead Band**	
		Min. Set Point	**Max. Set Point**
1950P-2	.5 to 2.0	0.3 PSI	0.3 PSI
1950P-8	1.5 to 8.0	1.0 PSI	1.0 PSI
1950P-15	3.0 to 15.0	0.9 PSI	0.9 PSI
1950P-25	4.0 to 25.0	0.7 PSI	0.7 PSI
1950P-50	15.0 to 50	1.0 PSI	1.5 PSI

The New Model 1950 Explosion-Proof Switch combines the best features of the popular Dwyer Series 1900 Pressure Switch with a compact explosion-proof housing.

The unit is U.L. and CSA listed, FM approved for use in Class I, Groups C & D, Class II, Groups E, F, & G and Class III atmospheres. It is also totally rain-tight for outdoor installations. Twelve models allow set-points from .03 to 20 inches W.C. and from .5 to 50 PSI.

Easy access to the SPDT switch for electrical hook-up is provided by removing the top plate of the three-part aluminum housing. Adjustment to the set point of the switch can be made without disassembly of the housing. The unit is very compact, about half the weight and bulk of equivalent conventional explosion-proof switches.

CAUTION: For use only with air or compatible gases. Use of the Model 1950 switch with explosive media connected to the Low pressure port (including differential pressure applications in such media) is not recommended. Switch contact arcing can cause an explosion inside the switch housing which, while contained, may render the switch inoperative. If switch is being used to sense a single positive pressure relative to atmosphere, run a line from the low pressure port to a non-hazardous area free of combustible gases. This may increase response time on -0 and -00 models.

PHYSICAL DATA

Temperature Limits: –40° to 140°F (–40° to 60°C), 1950P-8, 15, 25 & 50: 0° to 140°F (–17.8° to 60°C), 1950-02: –30° to 130°F (–34.4° to 54.4°C).

Rated Pressure: 1950 — 45 IN. W.C., 1950P — 35 PSI, 1950P-50 only — 70 PSI.

Maximum surge pressure: 1950 — 10 PSI, 1950P — 50 PSI, 1950P-50 only — 90 PSI.

Pressure Connections: 1/8" NPT.

Electrical Rating: 15 amps, 125, 250,480 volts, 60 Hz. A.C. Resistive 1/8 H.P. @ 125 volts, 1/4 H.P. @ 250 volts, 60 Hz. A.C.

Wiring connections: 3 screw type; common, norm. open and norm. closed.

Conduit connections: 1/2" NPT.

Set point adjustment: Screw type on top of housing. Field adjustable.

Housing: Anodized cast aluminum.

Diaphragm: Molded fluorosilicone rubber. 02 model, silicone on nylon.

Calibration Spring: Stainless Steel.

Installation: Mount with diaphragm in vertical position.

Weight: 3 1/4 lbs. 02 model, 4 lbs., 7 oz.

Response Time: Because of restrictive effect of flame arrestors, switch response time may be as much as 10-15 seconds where applied pressures are near set point.

NOTE: The last number-letter combination in the 1950 model number identifies the switch electrical rating (number) and diaphragm material (letter). The 2F combination is standard as described in the physical data above. In the case of special models, a number 1 rating is the same as 2; a number 3 or 4 rating is 10A 125, 250, 480 VAC - ⅛ HP 125 VAC, ¼ HP 250 VAC; and a number 5 or 6 rating is 1A 125 VAC. A letter B indicates a Buna-N diaphragm, N; Neoprene, S; Silicone, and V; Viton.

DWYER INSTRUMENTS, INC.
P.O. BOX 373 • MICHIGAN CITY, INDIANA 46360 U.S.A.
Telephone 219/879-8000
Fax 219/872-9057

BOM# 719

Dimensions (in inches)

1-1/2" – 2" Series "G" KINEMAX® Burners

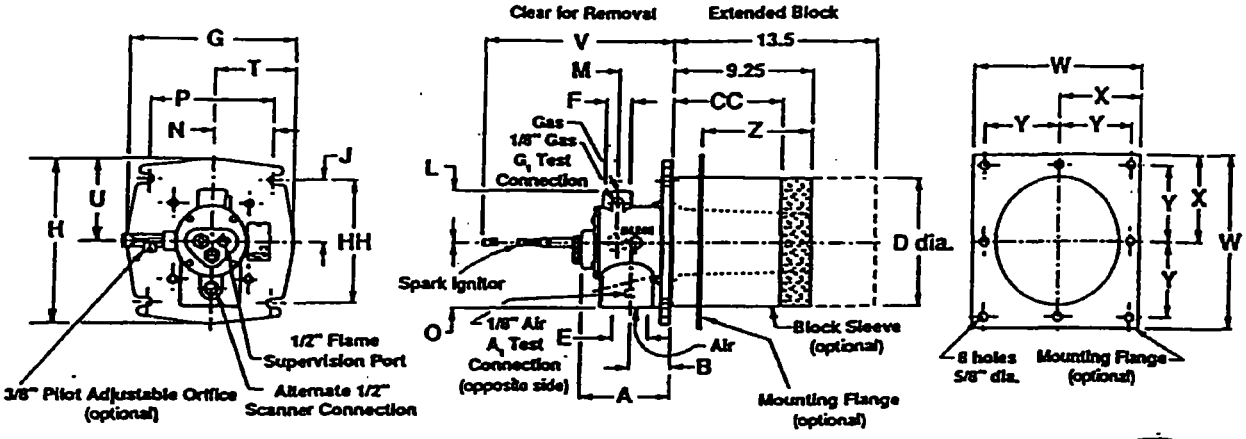

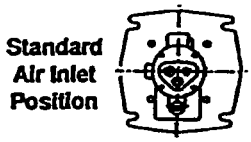

#719

Adjustable Orifice for all burner sizes

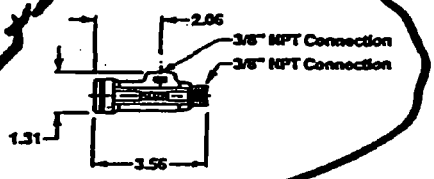

Test Connection Kit for all burner sizes

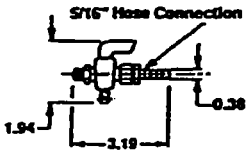

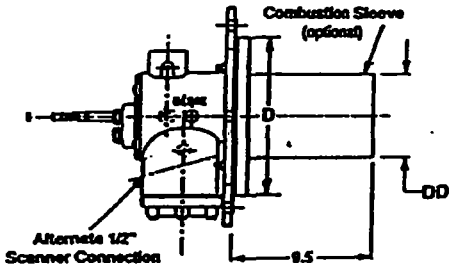

Flame Rod

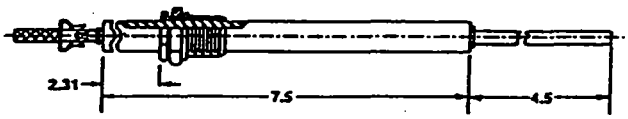

Spark Ignitor

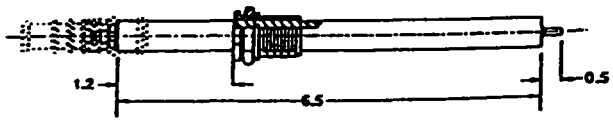

Burner Size	A	B	Dia. D	DD	NPT E	NPT F	G	H	HH	J	L	M	N	O	P	T	U
~~1-1/2"~~	6.06	2.75	8.62	4	1-1/2"	3/4"	11	11	8.19	4.12	3.38	3.69	4.12	4.31	8.19	5.5	5.5
2"				4.25	2"	1"											

Burner Size	V	W	X	Y	C.S. Std. Blk.	S.S. Std. Blk.	S.S. Ext. Blk.	Carbon Steel Sleeve		Stainless Steel			
										Standard Block		Extended Block	
					CC	CC	CC	Z (min.)	Z (max.)	Z (min.)	Z (max.)	Z (min.)	Z (max.)
~~1-1/2"~~ 2"	11	11.75	5.88	5.12	2.25	7.25	10	2	7.25	2	7.25	3.5	11.5

Pipe threads on this page conform to NPT (ANSI Standard B2.1)

ORDERING INFORMATION

BOM# 721 722

PIPE SIZE N.P.T.	FULL PORT VALVES						REDUCED PORT VALVES			
	MANUAL 75° ROTATION		AUTOMATIC* 75° ROTATION		AUTOMATIC* 360° ROTATION		MANUAL 75° ROTATION		AUTOMATIC* 75° ROTATION	
	CATALOG NUMBER	ASSEMBLY NUMBER	CATALOG NUMBER	ASSEMBLY NUMBER	CATALOG NUMBER	ASSEMBLY NUMBER	CATALOG NUMBER	ASSEMBLY NUMBER	CATALOG NUMBER	ASSEMBLY NUMBER
3/4"	103 BV	500987	3 BV-ABD	500561	3 BV-A	500917	—	—	—	—
1"	104 BV	500988	4 BV-ABD	500562	4 BV-A	500749	104 BVR	500980	4 BV-AR	500920
1-1/4"	105 BV	500989	5 BV-ABD	500563	5 BV-A	500750	105 BVR	500981	5 BV-AR	500921
1-1/2"	106 BV	500990	6 BV-ABD	500564	6 BV-A	500751	106 BVR	500982	6 BV-AR	500922
2"	108 BV	500991	8 BV-ABD	500565	8 BV-A	500752	108 BVR	500983	8 BV-AR	500923
2-1/2"	110 BV	500992	10 BV-ABD	500566	10 BV-A	500753	110 BVR	500984	10 BV-AR	500924
3"	112 BV	500993	12 BV-ABD	500567	12 BV-A	500754	112 BVR	500985	12 BV-AR	500925
4"	116 BV	500994	16 BV-ABD	500568	16 BV-A	500837	116 BVR	500986	16 BV-AR	500926
6"	24 BV	500915	24 BV-ABD	500998	—	—	24 BVR	500690	24 BV-AR	500975
8"	32 BV	500913	32 BV-ABD	500999	—	—	32 BVR	500691	32 BV-AR	500976

*Automatic Butterfly Valves are furnished standard with Control Arm Assembly No. 500527. Optional control arm assemblies for 3/8" dia. shafts are listed on page 4 of this bulletin and are available from Eclipse at extra cost. Control arm dimensions are also listed on page 4.

OPERATOR PARTS MOUNTING GROUPS

Parts groups include mounting plates and linkages. They do not include valve, operator, or operator control arm. Parts groups will fit any size valve.

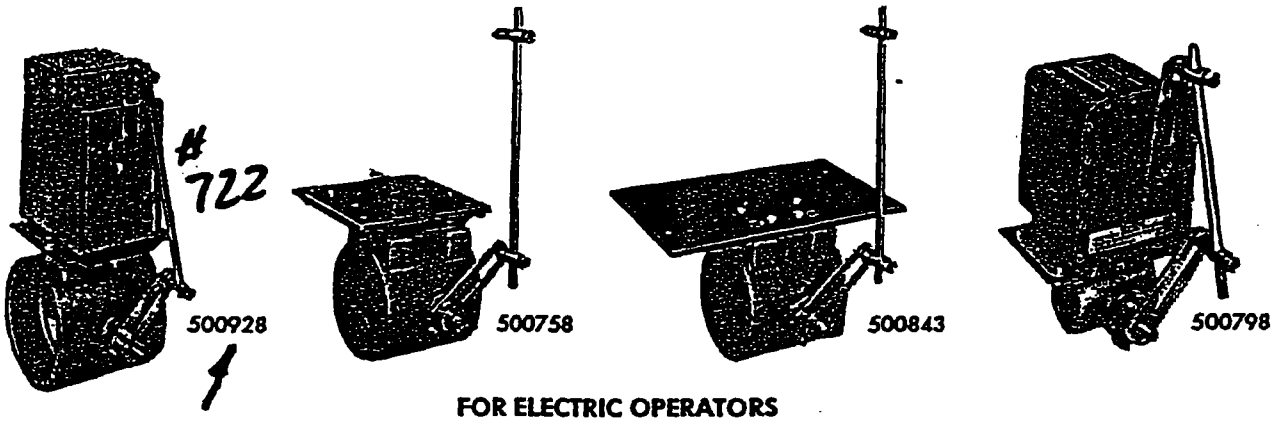

FOR ELECTRIC OPERATORS

PARTS GROUP ASSY. NO.	OPERATOR TO BE MOUNTED
500928	Eclipse; Penn; Barber-Colman; L & N 10210 Series; Honeywell M455, M644, M944, M904, M931A, M945, M954, M941, M934, M204, M405, M905, M7044, M7045, and all other "Modutrol" motors.
500758	Honeywell M640 & M940.
500843	L & N 10260 Series.
500798	White-Rodgers Type 3405-3.

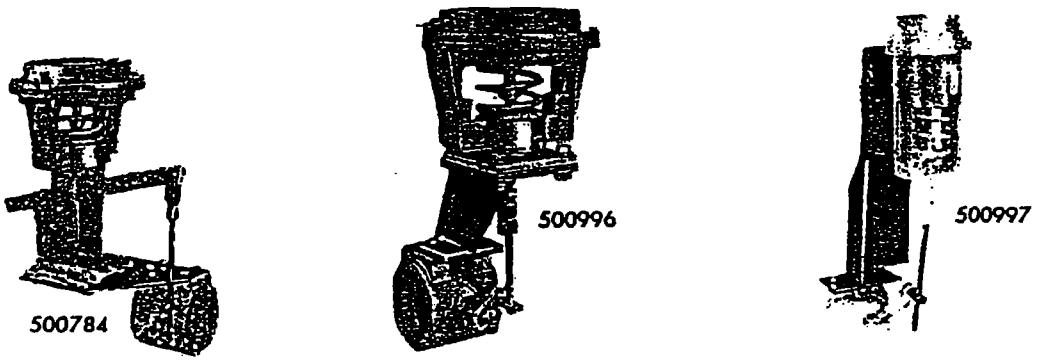

FOR PNEUMATIC OPERATORS

PARTS GROUP ASSY. NO.	OPERATOR TO BE MOUNTED
500784	Lever models, Honeywell 03-8 SLO, 05, 01-9, 01-11, 01-13; Conoflow with 3-1/2" sq. hole pattern.
500996	Thrust model, Honeywell 8610314-112-00-001-01.
500997	Thrust models, Barber-Colman [illegible]

SERIES 3000

BOM# 723

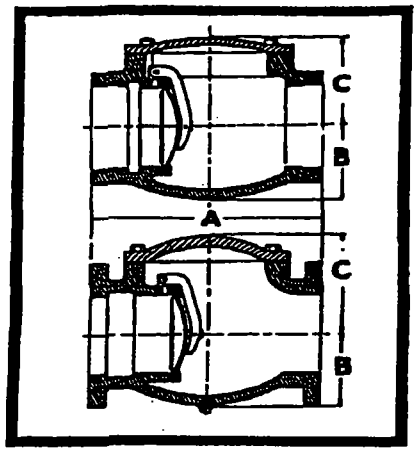

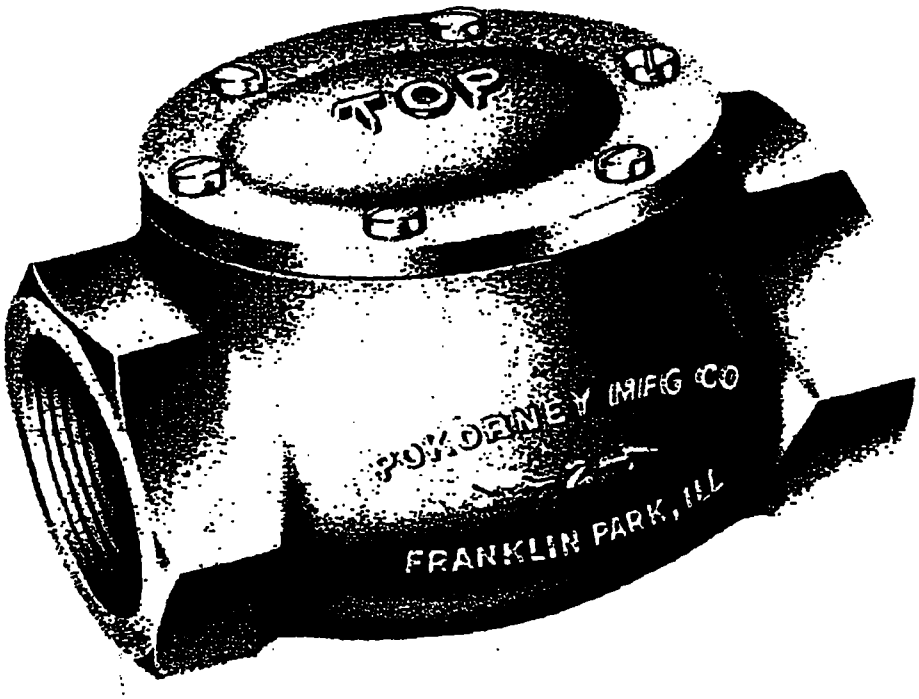

Vacuum Check Valves

minimum pressure drop • full flow • stainless steel trim

Pokorney Vacuum check valves are designed and engineered for the unique problems of the vacuum field. Featuring extremely low pressure drop, they open on less than 1/10" W.C. Special design permits light-weight stamped stainless steel disc to open fully, providing full flow with minimum resistance. Non-scuffing disc mechanism has free action at all times. Positive shut-off even at minimum flow is assured by unique elastomeric permanently molded facing (Viton or Ethylene Propylene—EPDM, or Teflon) on specially designed stainless steel disc. Noiseless, ruggedly constructed Pokorney Vacuum valves have a high safety factor. Each valve is individually tested before shipment over a range from 0 to 50 p.s.i. back pressure and must show *zero* leakage at *all* pressures. Precision manufactured throughout. All internal trim stainless steel. Guaranteed pipe concentricity.

CAT. NO.	I.P.S. SIZES	STANDARD MATERIAL	DIMENSIONS IN INCHES A	B	C	TYPE
3034	¾	Aluminum, Bronze, CI	2¾	1	1⅜	Screwed
3100	1	Aluminum, Bronze, CI	3 5/16	1⅛	1½	Screwed
3114	1¼	Alum., Bronze, CI, SS	3⅞	1⅜	1⅞	Screwed
3112	1½	Alum., Bronze, CI, SS	4½	1⅜	2¼	Screwed
3200	2	Alum., Bronze, CI, SS	5¾	2	2½	Screwed
3300	3	Ductile	8½-8 5/16	3 1/16	3¾	Screwed or Flanged
3400	4	Ductile	11-11½	4	5	Screwed or Flanged
3600	6	Ductile	14⅞	6	7⅛	Flanged
3800	8	Ductile	19¾	6¾	8	Flanged

ORDERING INFORMATION

Option Selection Guide

SIZE

¾"	3034
1"	3100
1¼"	3114
1½"	3112
2"	3200
3"	3300
4"	3400
6"	3600
8"	3800

BODY MATERIAL

A—Aluminum ¾" through 2"
B—Bronze ¾" through 2"
C—Cast Iron ¾" through 2"
S—Stainless Steel 1¼" through 2"
D—Ductile Iron 3" through 8"

TYPE OF ENDS

S—Screwed ¾" through 4"
F—Flanged 3" through 8"

DISC SEATING MATERIAL

V—Viton
E—Ethylene Propylene (EPDM)
T—Teflon

Example—3300 DFV = 3" Ductile Iron flanged body with Viton seating material.
Note: Interior trim on all valves is stainless steel.

FRI 505
FRI 507
FRI 510
RI 512

Installation Manual

BOM# 729

DUNGS®

SPECIFICATIONS

Gas pressure regulator with integrated gas filter in one housing. The FRI 500 series regulator mounts directly onto the DMV 700 series valves. It is also suitable for mounting in a gas train using two NPT threaded flanges.

Body Size / **Flange Size**

FRI 505 & 507	1/2" to 1" NPT
FRI 510 & 512	1" to 2" NPT

Gases
natural gas, propane, noncorrosive gases, and air

Ambient/Fluid Temperature
5° F to 150° F

Materials in Contact w/ Gas

housing:	cast aluminum
internal components:	plastic, aluminum, steel
rubber components:	NBR-based rubber

Filter
mesh < 0.05 mm

Mounting Position
spring dome upright to spring dome horizontal

Maximum Operating Pressure
7 psi

Approvals
UL Unlisted Component: File No. MH16727 (SP)
FM Approved: Report J.I. 1Z6A0.AF (7411)
AGA: ANSI Z21.18-1995 (pending)
CGA: 6.3-M95 (pending)

Outlet Pressure Range

spring # 1:	brown:	1" to 3.6" W.C.
spring # 2:	white:	2" to 5" W.C.
spring # 3:	orange:	2.8" to 8" W.C.
spring # 4:	blue (standard):	4" to 12" W.C.
spring # 5:	red:	10" to 22" W.C.
spring # 6:	yellow:	12" to 28" W.C.
spring # 7:	black:	24" to 40" W.C.
spring # 8:	pink:	40" to 60" W.C.

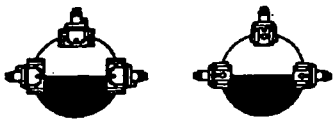

CAPACITY

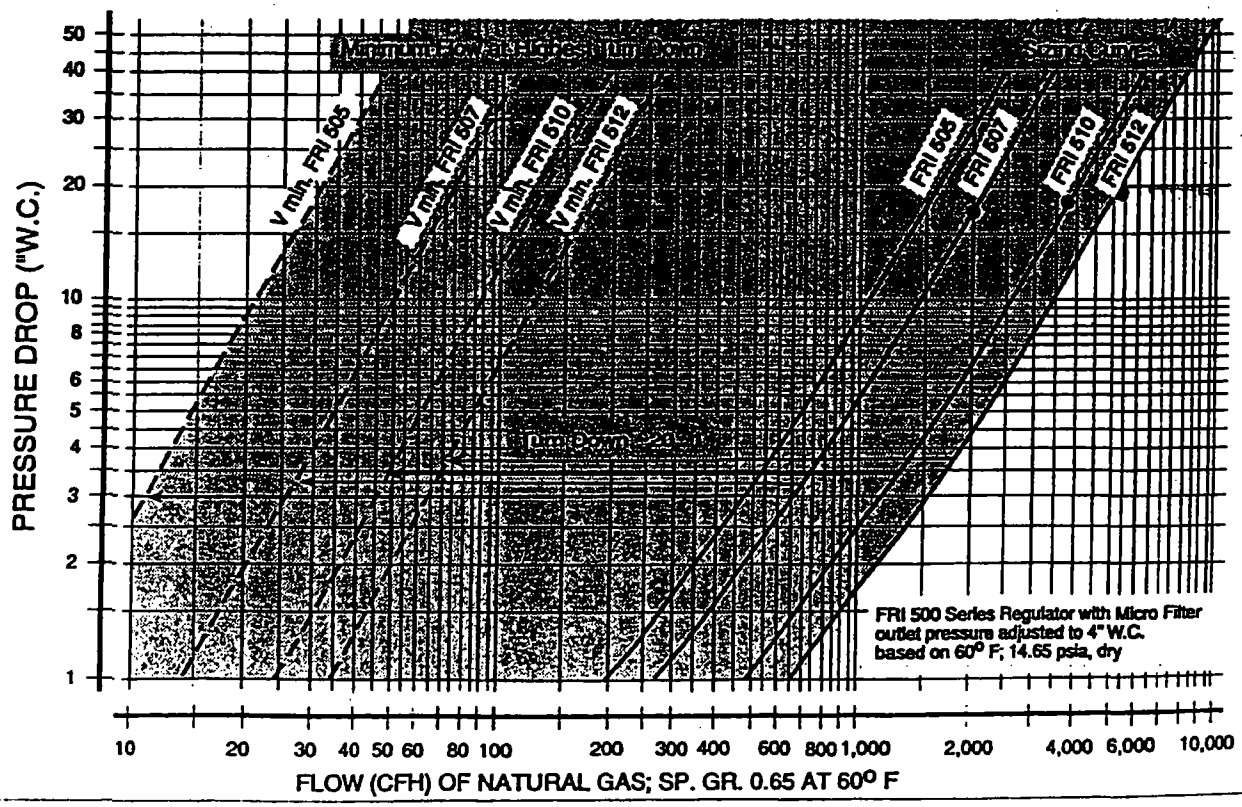

FRI 500 IG

Editor

Karl Dungs Inc.
2740 Patton Road - Roseville - MN 55113 - USA - Phone: 612-635-0410 - Fax: 612-635-0813

Filter

- Inspect the filter at least once a year.
- Replace the filter if the pressure drop between ports A and B is more than 4" W.C.
- Replace the filter if the pressure drop between ports A and B is more than twice as high as to the first installation inspection.

Filter Change

- Remove the FRI.
- Follow the mounting instructions in reverse order.
- Remove the support ring.
- Remove the filter insert.
- Insert a new filter insert.
- Press in the support ring.
- Install FRI in the gas line.
- Follow the mounting instructions.
- Perform a function and leak test.

When the FRI is mounted downstream of the DMV, the filter should be removed from the FRI and mounted in the upstream side of the DMV. Follow the same installation instructions as for the filter change.

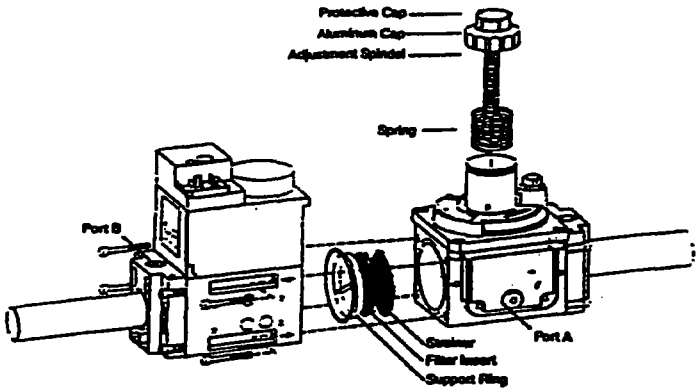

		Order #
Filter	FRI 505 - 507	# D 214 276
	FRI 510 - 512	# D 214 525
Strainer	FRI 505 - 507	# D 214 275
	FRI 510 - 512	# D 214 521

OUTLET PRESSURE RANGES

Springs		FRI 505 FRI 507	FRI 510 FRI 512
# 1 brown:	1" to 3.6" W.C.	D 069 112	D 069 278
# 2 white:	2" to 5" W.C.	D 069 120	D 069 286
# 3 orange:	2.8" to 8" W.C.	D 069 138	D 069 294
# 4 blue:	4" to 12" W.C.	D 069 146	D 069 302
# 5 red:	10" to 22" W.C.	D 069 153	D 069 310
# 6 yellow:	12" to 28" W.C.	D 069 161	D 069 328
→ # 7 black:	24" to 40" W.C.	D 069 179	D 069 336
# 8 pink:	40" to 60" W.C.	D 069 187	D 069 344

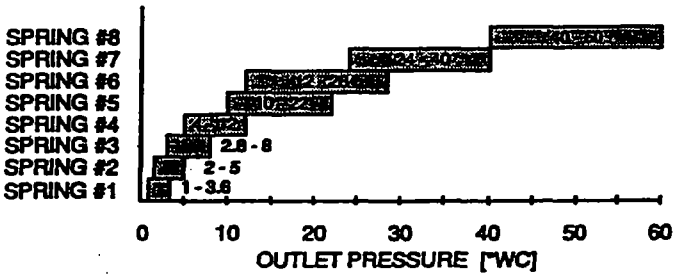

DIMENSIONS & FLANGES

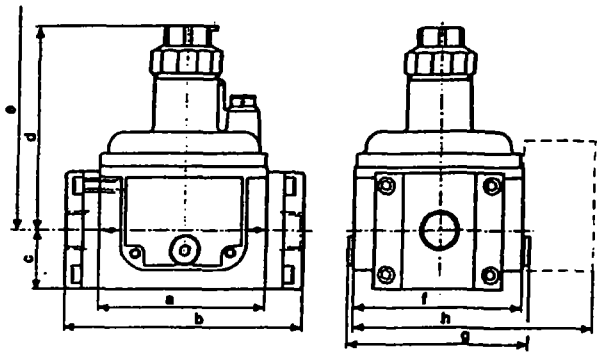

NPT Threaded Flanges	Order # FRI 505 FRI 507	FRI 510 FRI 512
1/2"	D 223 371	
3/4"	D 222 368	
1"	D 221 999	D 222 369
1-1/4"		D 222 370
1-1/2"		D 222 003
2"		D 221 997

	a	b	c	d	e	f	g	h	Weight	Order #
				[inches]					[lb]	
FRI 505	3-5/8	5-9/16	1-5/16	6	7-11/16	3-11/16	4-1/8	5-1/2	2.0	D 216 204
FRI 507	3-5/8	5-9/16	1-5/16	6	7-11/16	3-11/16	4-1/8	5-1/2	2.0	D 216 205
FRI 510	4-7/8	7	1-3/4	6-7/8	9-1/4	4-15/16	5-5/16	6-5/8	3.5	D 214 407
FRI 512	4-7/8	7	1-3/4	6-7/8	9-1/4	4-15/16	5-5/16	6-5/8	3.5	D 214 452

Karl Dungs Inc.
2740 Patton Road - Roseville - MN 55113 - USA - Phone: 612-635-0410 - Fax: 612-635-0813

- Do not thread pipe too far. Regulator distortion and/or malfunction may result from excess pipe in the regulator.
- Apply counter pressure when screwing the pipe into the flanges.
- Apply a parallel jaw wrench only to the flats on the flange.
- Do not overtighten the pipe. Follow the maximum torque values listed below.

1/2"	3/4"	1"	1-1/4"	1-1/2"	2"	NPT pipe
375	560	750	875	940	1190	[lb-in]

- Clean the mounting surface of the flange. Make sure it is in good condition.
- Make sure the O-ring and the groove are clean and in good condition.
- Insert the 57 x 3 mm (76 x 3.5 mm) O-ring(s) supplied with the FRI 505 - 507 (FRI 510 - 512) mounting kit into the grooves on the side of the FRI body.
- Install the regulator with the gas flow matching the direction indicated by the arrows on the casting.
- **CAUTION:** If the flow is not in the same direction of the arrows, the regulator may not operate properly.
- Attach the regulator to the flange using the socket cap screws supplied in the mounting kit.
- Use the screws as indicated on the label on the mounting kit.
- Use a 5 mm (6 mm) hex key wrench for the FRI 505 - 507 (FRI 510 - 512) mounting screws.
- Do not overtighten the screws. Follow the maximum torque values listed on page 2.
- Perform a leak test to verify that no leakage occurs.

Vent Line

- On indoor installations requiring venting outdoors, run the piping as short and as direct as possible.
- With natural gas or other hazardous gases, vent to a safe place outdoors in case gas should accidentally be discharged.
- Screen and protect the opening outdoors to guard against any blocking of the vent line.
- **CAUTION:** Where vent lines are used it is the users responsibility to assure that each regulator is individually vented.

OPERATION

Start-Up

- The inlet and outlet shut off valves should both be closed.
- Slowly and carefully open the inlet shut off valve just enough to allow inlet pressure to build up slowly in the regulator until it is fully pressurized.

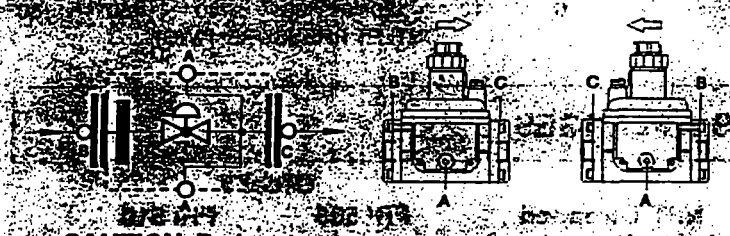

- **CAUTION:** During start-up a pressure gauge must be used on the regulator outlet pressure and carefully watched. While inlet pressure builds up, outlet pressure must not exceed set point by more than 30%. If outlet pressure exceeds set point by more than 30% close the inlet shut off valve. The regulator is not closing properly. Check and make necessary corrections before proceeding with start-up.
- Slowly open the outlet shut off valve(s) to allow a small flow.
- **CAUTION:** Make sure the flow of gas does not create a hazard.
- With gas flowing, check for correct inlet and outlet pressures.
- Complete start-up by making sure that there are no leaks.

Set-Point Adjustment

- Remove the black protective cap.
- To increase the outlet pressure set point turn the adjustment spindle counterclockwise with a screw driver.
- To decrease the outlet pressure set point turn the adjustment spindle clockwise with a screw driver.
- Always use an accurate pressure gauge connected downstream from the regulator to measure the actual outlet pressure.
- Screw on protective cap.
- After adjusting the set point for normal operation check to see that the gas pressure regulator operates as intended.

Outlet Pressure Range Change

- Remove the black protective cap.

Release spring by turning the adjustment spindle counterclockwise with a screw driver. Turn the spindle to stop.

- Remove the aluminum cap.
- Remove spring.
- Insert new spring.
- Assemble complete adjustment device and adjust desired outlet pressure. Follow the Adjustment of Outlet Pressure instructions.
- Screw on protective cap.
- Apply new label provided with new outlet pressure range onto the name plate.

Edition 8/13x ...il 600 IG

Dual Multi-Valve
DMV-D .../6
DMV-DLE .../6
Dimensions

BOM# 730

DUNGS®

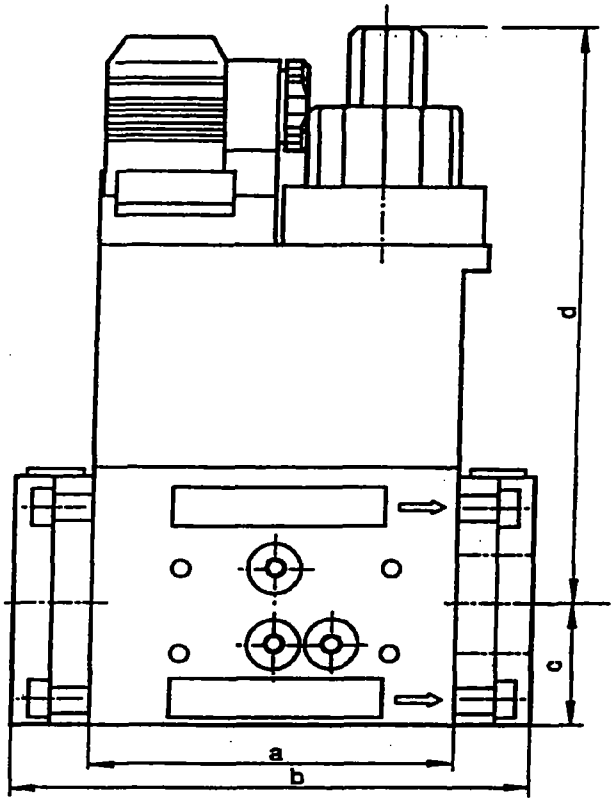

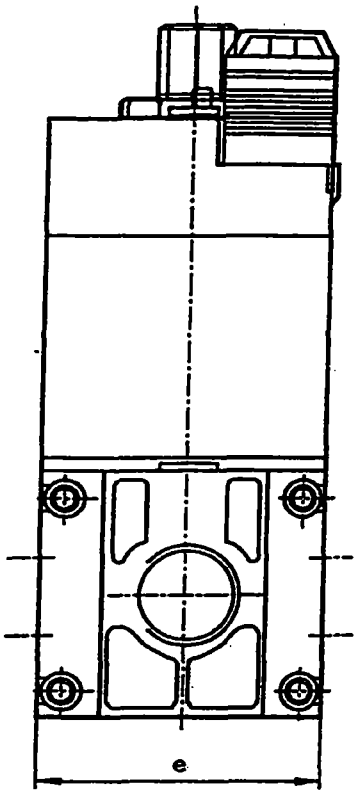

Item	Order # 110-120 Vac 50-60 Hz	Power [VA]	Dimensions in [mm] a	b	c	d	e	Weight [Lbs]
DMV-D 701/6	D 224 842	45	3-11/16	5-9/16	1-3/8	5-5/16	2-7/8	4.6
DMV-D 702/6	D 224 843	65	4-7/8	6-7/8	1-13/16	5-15/16	3-15/16	10.1
DMV-D 703/6	D 224 844	90	4-7/8	7-15/16	1-13/16	7-1/2	3-15/16	12.1
DMV-DLE 701/6	D 224 845	45	3-11/16	5-9/16	1-3/8	5-15/16	2-7/8	4.8
DMV-DLE 702/6	D 224 846	65	4-7/8	6-7/8	1-13/16	6-11/16	3-15/16	10.3
DMV-DLE 703/6	D 224 847	90	4-7/8	7-15/16	1-13/16	8-5/8	3-15/16	12.3

Flange	NPT	Rp	for DMV .../6
1/2	D 222 371	D 222 341	DMV 701/6
3/4	D 222 368	D 222 342	DMV 701/6
1	D 221 999	D 222 001	DMV 701/6
1	D 222 369	D 222 343	DMV 702/6 & 703/6
1 1/4	D 222 370	D 222 344	DMV 702/6 & 703/6
1 1/2	D 222 003	D 221 884	DMV 702/6 & 703/6
2	D 221 997	D 221 926	DMV 702/6 & 703/6

Please order flanges and DIN-Connector separately

DIN-Connector	D 210 319
CPI 400	D 224 253

pd ion 12/18/98

Dual Multi-Valve
DMV-D .../6
DMV-DLE .../6
Capacity

DUNGS®

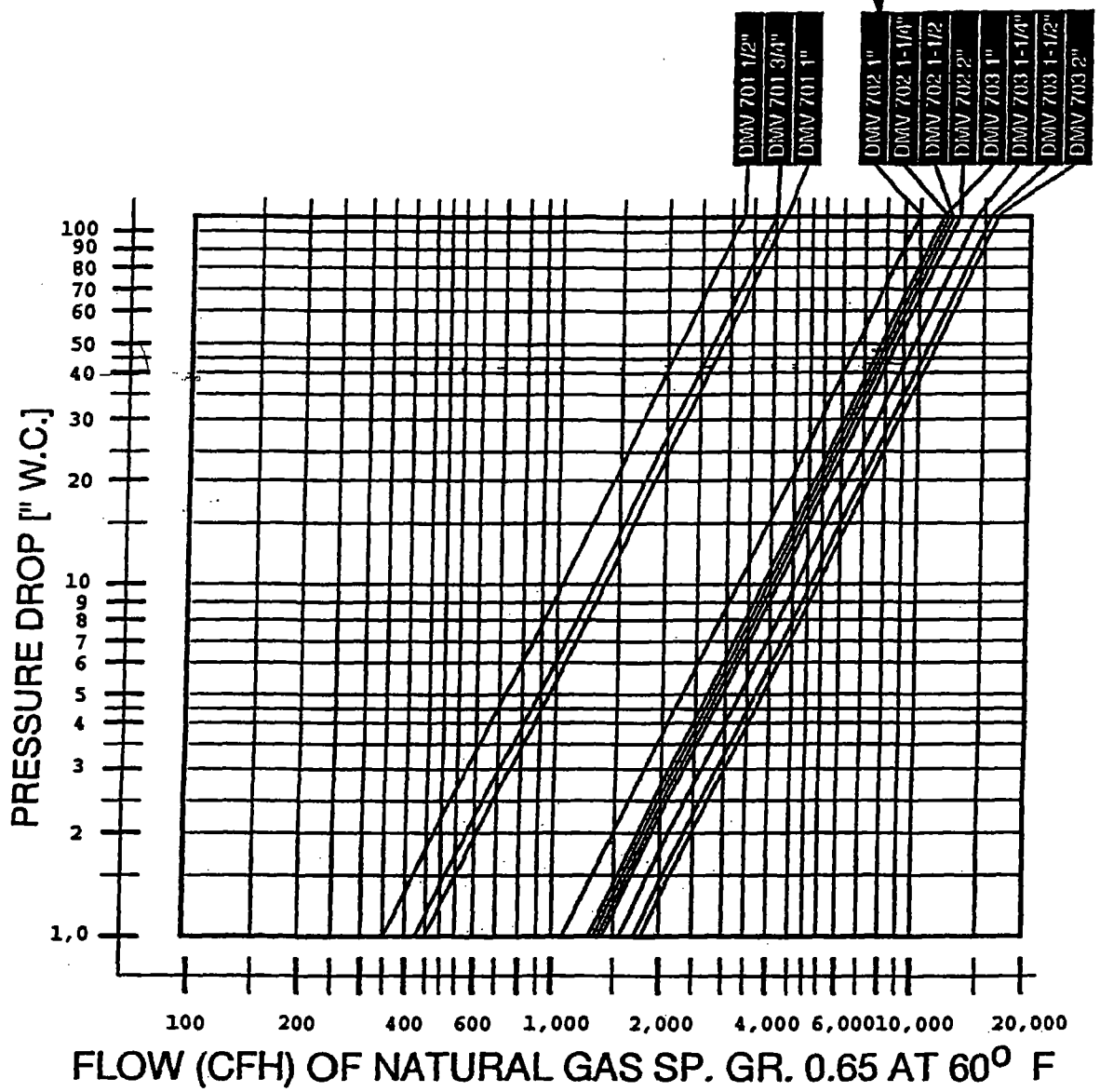

Capacity in cfh at pressure drop of 1 inch water column, natural gas, sp. gr. = 0.64						
	1/2"	3/4"	1"	1-1/4"	1-1/2"	2"
DMV 701	345	429	457	-	-	-
→ DMV 702	-	-	1065	1277	1368	1430
DMV 703	-	-	1230	1532	1698	1795

Dual Multi-Valve
DMV 700 Series
1/2" - 2" NPT
1/2" - 2" Rp

DUNGS®

DMV-D .../6
DMV-DLE .../6

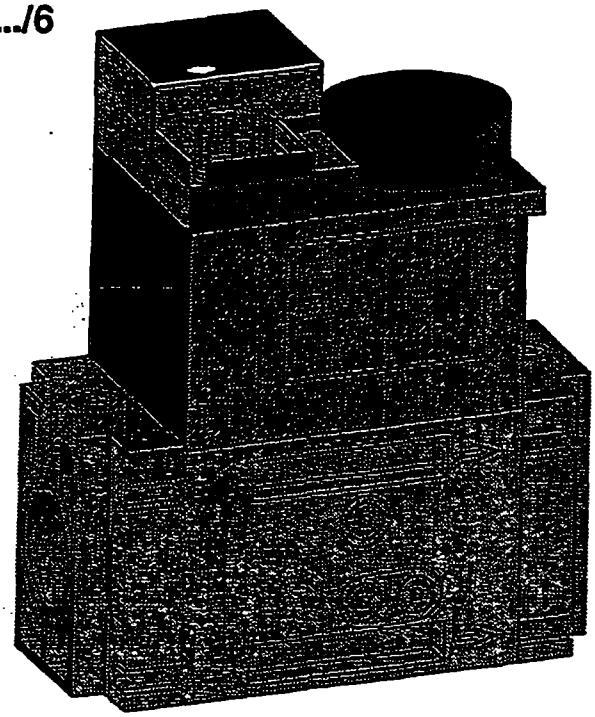

Description
The Dual Multi-Valve (DMV) combines two safety shutoff valves in one compact housing. The DMV reduces piping costs and space requirements and allows the direct addition of the following DUNGS® devices:

- High and low gas pressure switches
- Valve Proving System
- Closed position indicator switch
- Pressure regulator

Application
The DMV is recommended for industrial and commercial process heating and boiler applications that require two safety shutoff valves in series. The DMV can be used with natural gas, propane, and other noncorrosive gases and air.

Compact gas safety systems are easily created without additional piping by adding DUNGS® surface mounted devices to the DMV.

Benefits
- Compact design saves installation space.
- Dual solenoids, integral flanges, and side taps reduce piping time and costs.
- Three body styles reduce inventories.
- When used with DUNGS® surface-mount devices, connecting pipes are eliminated.
- Slow-opening option provides smoother light-off.
- Optimized internal contours provide a low pressure drop.
- Flow adjustment allows performance specific throttling.

Approvals
UL Recognized Component,
UL 429: "Safety Shutoff Valves"
FM Class 7400: "Gas Safety Shutoff Valves"

Features
All DUNGS® valve components are built to ISO 9001 manufacturing and test standards to ensure safe, reliable operation.

- Two normally closed safety shutoff valves in one housing
- Less than 1 second closing time
- Fast-opening or slow-opening configurations with adjustable initial flow
- Adjustable main flow
- Two actuators with independent valve operation
- Maximum operating pressure 7 psi
- Standard 1/2" to 2" NPT threaded flanges
- Optional Rp (ISO-7.1) threaded flanges
- Standard visual position indicator
- Optional closed position indicator switch
- Direct mounting of pressure regulator, pressure switches, and valve proving system
- Optional European-approved versions

MARSHALL W. NELSON & ASSOC.
SALES & SERVICE
4155 Sibley Memorial Highway
Eagan, MN 55122-1904
PHONE: 612-890-0720 FAX: 612-890-7009

edition 12/19/98

Dual Multi-Valve
DMV-D .../6
DMV-DLE .../6
Specifications

DUNGS®

DMV-D .../6 Two normally closed safety shutoff valves in one housing. Fast opening, fast closing. Main flow adjustable with valve 2.

DMV-DLE .../6 Two normally closed safety shutoff valves in one housing. Valve 1 fast opening, fast closing. Valve 2 slow opening, fast closing. Main flow and initial lift adjustable.

Body sizes **Flanges with NPT thread**	DMV 701 1/2" - 1" NPT	DMV 702 1" - 2" NPT	DMV 703 1" - 2" NPT
Gases	natural gas, propane, other noncorrosive gases and air		
Max. Operating Pressure	7 psi		
Electrical Ratings	110 to 120 Vac / 50 to 60 Hz	220 to 240 Vac / 50 to 60 Hz	24 Vdc
Power Consumption	DMV 701: 45 VA	DMV 702: 65 VA	DMV 703: 90 VA
Electrical Connection	DIN-Connector		
Operating Time	100 % duty cycle		
Ambient / Fluid Temperature	-40 °F to +150 °F		
Classification Valve V1	Safety Shutoff Valve: UL 429, FM 7400		
Classification Valve V2	Safety Shutoff Valve: UL 429, FM 7400		
Closing Time	< 1 second		
Opening Time	DMV-D.../6: DMV-DLE.../6:	V1 & V2 < 1 second V1 < 1 second; V2 about 20 seconds at 70 °F	
Initial Lift Adjustment	adjustable on V2: 0 to 70 % of total flow (DMV-DLE Series)		
Main Flow Setting	adjustable on V2: 10 to 100% of total flow		
Materials in contact with Gas	Housing: Sealings on valve seats:	Aluminium, Steel NBR-based rubber	
Mounting Position	solenoid upright vertical to solenoid horizontal		
Strainer	installed in the housing upstream V1		
Test Port	G 1/8 ISO 228 taps available on both sides upstream V1, between V1 and V2, downstream V2, and on both flanges	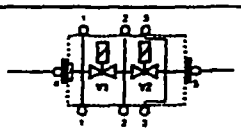	
Position Indication	Visual Indicator standard; Closed Position Indicator CPI 400 w/ visual indication and electrical switch (SPDT) optional		

Karl Dungs Inc.
2740 Patton Road - Roseville, MN 55113 - USA, Phone: 612-635-0410 Fax: 612-635-0813

Dual Multi-Valve
DMV-D .../6
DMV-DLE .../6
Operation & Assembly Instructions

DUNGS®

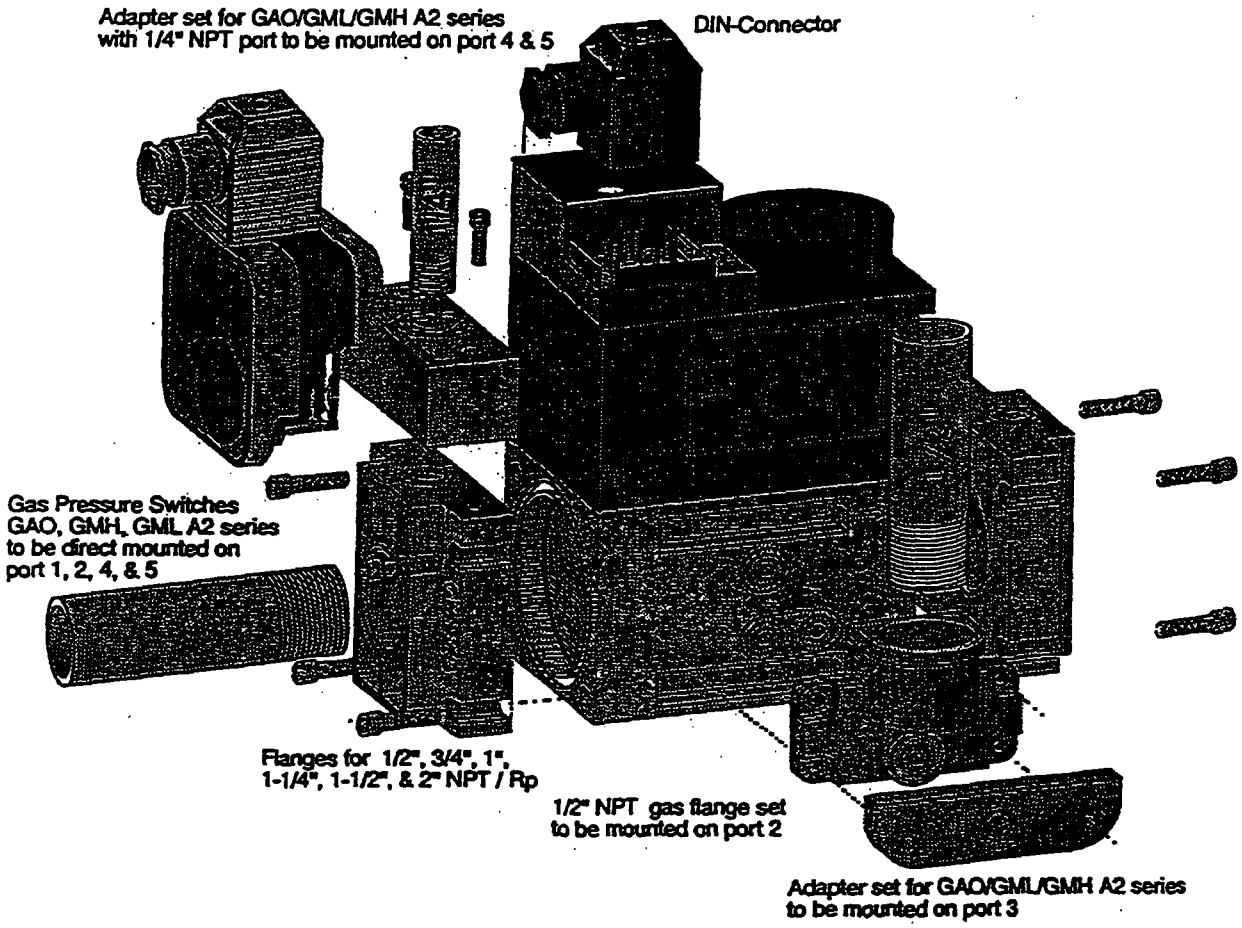

Electrical Connection

Make the electrical connection by connecting COM to the live wire L1, Ground to ground, NO to the appropriate terminal of your Flame Safeguard, and N to the neutral wire. The light should be on when the valve is closed.

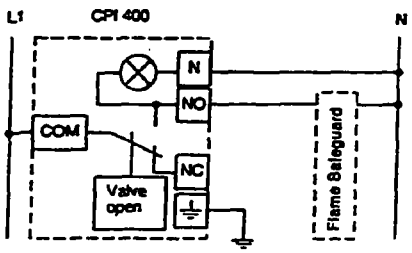

Adjustment (the valves must be closed):

Shut off the gas supply before installing the CPI 400. Remove clear cover. Turn the white knob counter clock wise until it comes to the stop. The circuit between the terminal COM and NO shall be open. Then turn the knob slowly clockwise until the switch makes. The switch is now adjusted. With all new installations this procedure should be adopted. Always begin adjustment with the valve closed and the circuit between the terminal COM and NO open.

Operation testing

Before putting the valve into service, test the indicator by opening and closing the valve with the gas supply shut off to visually insure that the indicator is working properly.

DUNGS®

Accessories:
Please use proper tools for mounting the system accessories. Do not overtighten the screws. Follow the maximum torque values listed below.

M4	M5	M6	M8
22	44	62	134 [lb-in]

G 1/8	G 1/4	G 1/2	G 3/4
44	62	88	134 [lb-in]

1/2" NPT Gas Flange Kit
The 1/2" NPT gas flange kit can be mounted directly on either side of the DMV series valves (port 2). It allows connecting of a 1/2" NPT pipe nipple downstream of the first valve V1 and upstream of the second valve V2.
Order Number: D 225 043

Test Nipple
The G 1/8 test nipple can be screwed in any pressure tap port (port 1,2,3,4, or 5).
Ordering Number: D 219 008

Adapter Kit for Pressure Switches
Adapter set for the GAO-A2, GML-A2, and GMH-A2 pressure switch series when mounted on either side of the DMV series valves downstream the second valve (port 3).
Ordering Number: D 214 975

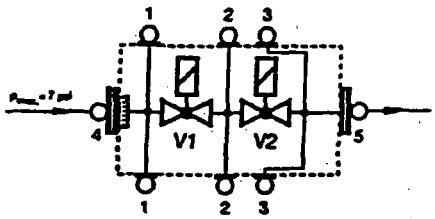

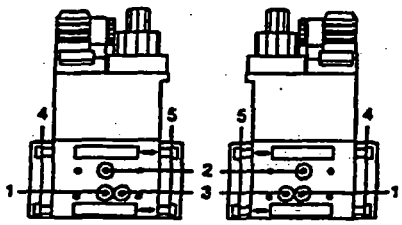

Adapter Kit for Pressure Switches with 1/4" NPT pipe connection
Adapter kit for the GAO-A2, GML-A2, and GMH-A2 pressure switch series to be mounted on upstream and downstream flange (port 4 & 5). It has a 1/4" NPT pipe nipple connection.
Ordering Number: D 225 047

Gas Pressure Switches
The GAO-A2, GML-A2, and GMH-A2 series pressure switches can be mounted directly on the ports 1, 2, 4, & 5 on the DMV series valves.
For installation please refer to the pressure switch installation guide.

Valve Proving System VPS 504
The valve proving system VPS 504 checks the closed position of the two safety shutoff valves. The VPS 504 is accepted by FM as an alternative for the "Proof of Closure". In an IRI gas train it can replace the vent valve and vent line. It meets the IRI requirement for Proof of Closure.
When using the VPS 504 in combination with the DMV please make sure that the ambient temperature is in the ambient temperature range of the VPS 504 (5° F to 150° F).
For installation please refer to the VPS 504 installation guide.

Pressure Regulator FRI .../10
The pressure regulator FRI .../10 mounts directly upstream or downstream on the DMV series valves. No additional piping is needed.
When using the FRI .../10 series regulator in combination with the DMV make sure that the ambient temperature is in the ambient temperature range of the FRI .../10 (5° F to 150° F).
For installation refer to the FRI .../10 installation guide.

Mounting Kit FRI + DMV
FRI 505 - 507 + DMV 701, Ordering Number: D 219 967
FRI 510 - 512 + DMV 702/703, Ordering Number: D 219 968

Dimensions (in inches)

1-1/2" - 2" Series "G" KINEMAX® Burners

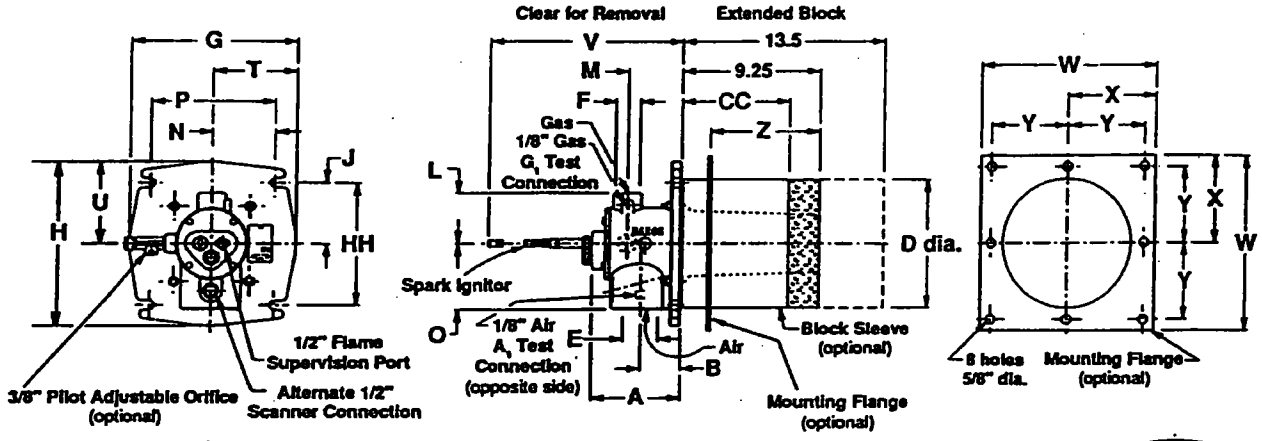

BOM# 713/714

Standard Air Inlet Position

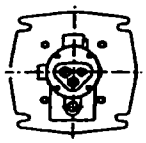

Adjustable Orifice
for all burner sizes

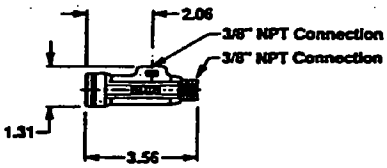

Test Connection Kit
for all burner sizes

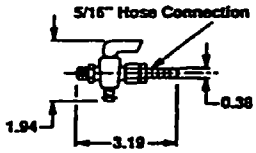

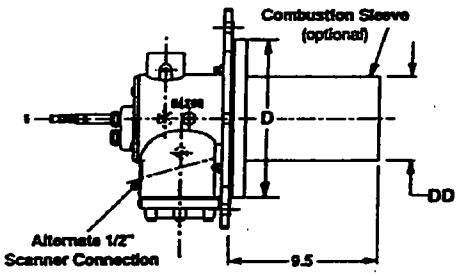

Flame Rod

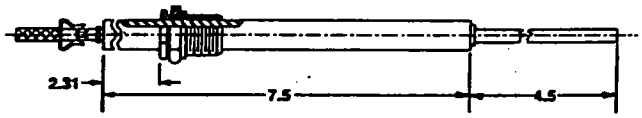

Spark Ignitor

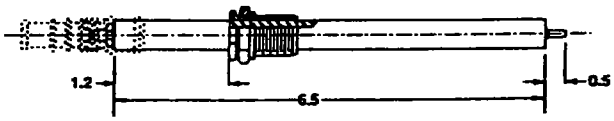

Burner Size	A	B	Dia. D	DD	NPT E	NPT F	G	H	HH	J	L	M	N	O	P	T	U
1-1/2"	6.06	2.75	8.62	4	1-1/2"	3/4"	11	11	8.19	4.12	3.38	3.69	4.12	4.31	8.19	5.5	5.5
2"				4.25	2"	1"											

Burner Size	V	W	X	Y	C.S. Std. Blk.	S.S. Std. Blk.	S.S. Ext. Blk.	Carbon Steel Sleeve		Stainless Steel			
										Standard Block		Extended Block	
					CC	CC	CC	Z (min.)	Z (max.)	Z (min.)	Z (max.)	Z (min.)	Z (max.)
1-1/2"	11	11.75	5.88	5.12	2.25	7.25	10	2	7.25	2	7.25	3.5	11.5
2"													

Pipe threads on this page conform to NPT (ANSI Standard B2.1)

Maxon practices a policy of continuous product improvement. It reserves the right to alter specifications without prior notice.

MAXON

BOM# 731 732

L-362 IG
Info
3/97

Gas Pressure Switches

Model GMH: Manual Reset High Limit (46015)
Model GML: Manual Reset Low Limit (46016)

MH 16628 APPROVED LR 53 222

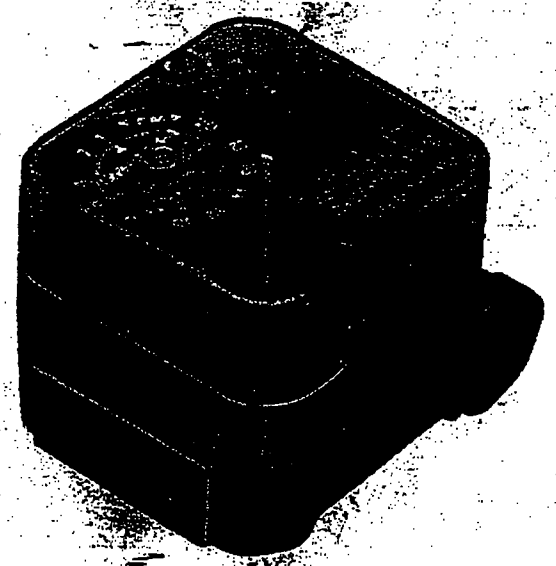

Warning

- **Do not drop or jar the switch.** Rough handling may damage the switch's internal components and cause unsafe operation.
- **Do not disassemble the switch.** If you do, you will void all approvals, listing and warranties. You may also damage the switch and cause unsafe operation, possibly resulting in a fire or explosion. If you experience any problems with the switch, return it to Karl Dungs, Inc. for replacement.

1.0 Specifications

Temperature Limits	Ambient & Gas: -40° to +140°F
Applications	Gas sensing ONLY
Materials	Base: Die-cast aluminum Switch: Glass filled polycarbonate Cover: Polycarbonate
Contact Electrical Rating	120/240 VAC, 5A resistive, 2.5A inductive (3A resistive, 1.5A inductive for CSA approval only)

Model Summary

P/N	Range Code–	Air Pressure Setpoint Range	Max. Pressure "w.c.	Max. Pressure PSI
-4	4	1.00–20.00"w.c.	200	7
-6	6	12.00–60.00"w.c.	200	7
-8	8	40.00–120.00"w.c.	400	14

2.0 Selection Guide

GM X - A4 - 4 - Y

Refer to the tables below to determine the sequence of numbers for the switch that you ordered. For example, a GMH-A4-4-4 is an manual reset high limit switch with a clear cover and a pressure range of 1 to 20" w.c.

GM - Adjustable Setpoint Gas Switch with Manual Reset and Clear Cover

X - Limit Type
- H - High (trips on rising pressure)
- L - Low (trips on falling pressure)

Y - Pressure Range
- 4 - 1.00-20.00" w.c.
- 6 - 2.00-60.00" w.c.
- 8 - 10.00-200.00" w.c.

3.0 Dimensions

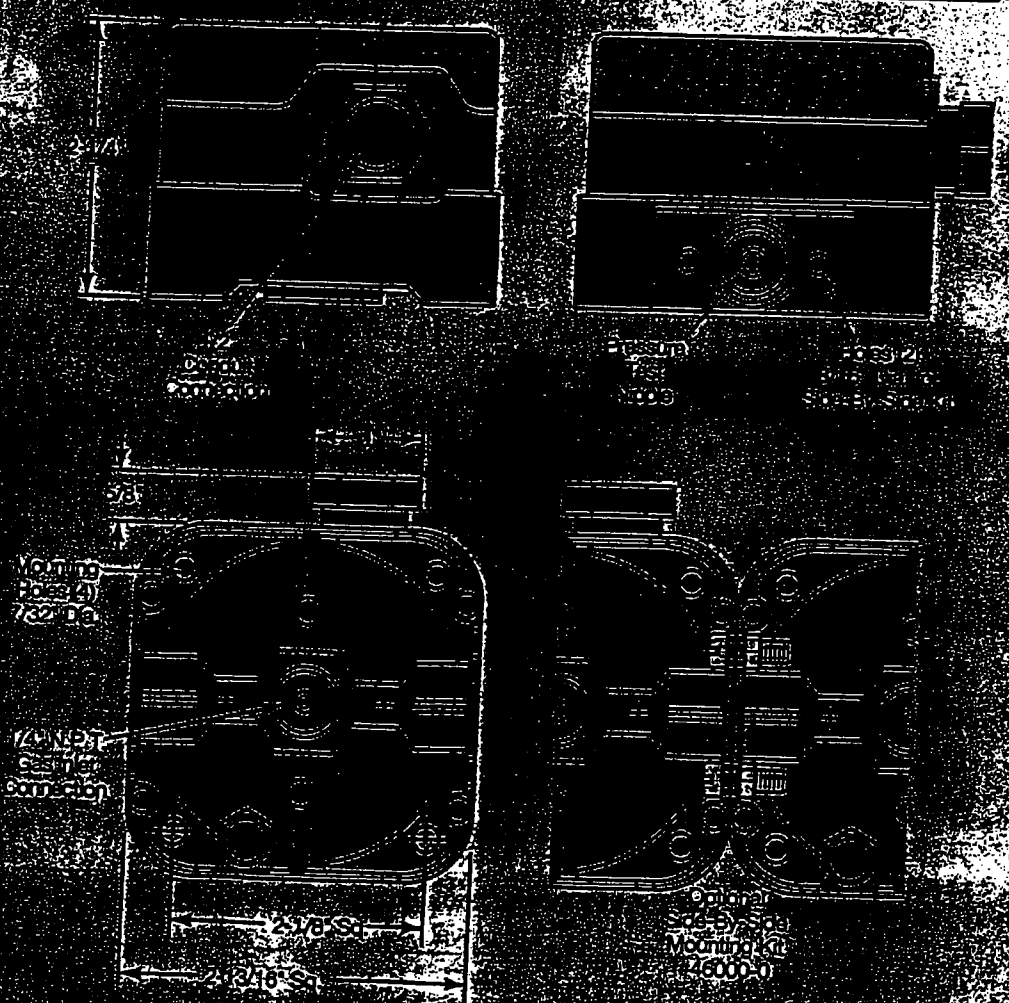

4.0 Installation

⚠ Caution

- Installation must be done with the supervision of a licensed burner technician. The system must meet all applicable codes. Improper installation may cause explosions, property damage and injuries.

Mounting Positions

All manual reset gas switches are calibrated for vertical mounting. The switching point may change by ±0.2" w.c. when not mounted vertically.

Mounting Suggestions

There are two possible ways to mount these switches, as shown in Figure 1. The most common is piping into the bottom gas inlet.

It is also possible to surface mount them. This is accomplished by removing the clear cover and using four #6 self tapping screws in each corner of the switch; do not over-tighten the screws. After mounting the switch, replace the clear cover.

⚠ Warning

- Use the appropriate tools to secure the switch and apply counterpressure when threading pipe into the conduit connection piece.
- The torque used when threading pipe into the conduit connection piece must not exceed 65 in./lbs. (5 ft./lbs.).

Figure 1-Mounting Suggestions

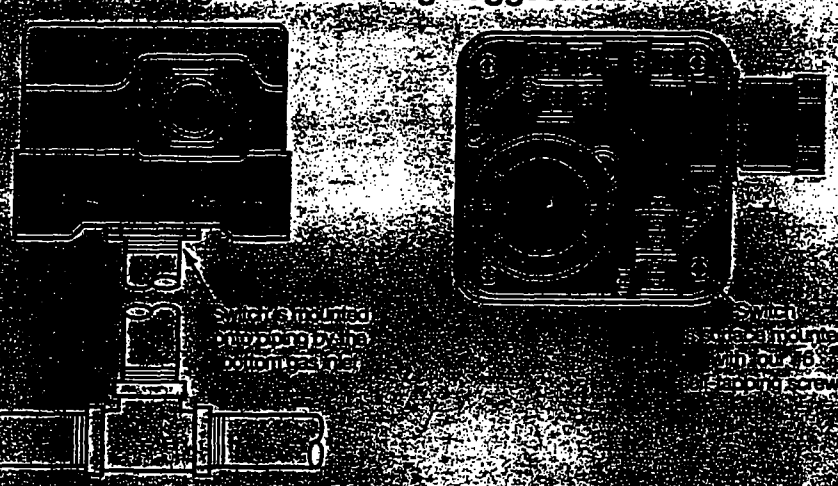

5.0 Wiring

Wiring Diagram — Figure 2 details wiring schemes and switching functions.

Electrical Service — Be sure to check that the contact electrical ratings (listed in Section 1.0) correspond with the electrical service being used.

Electrical Code — Make all wiring connections to the switch in accordance with local or regional electrical codes.

Wire Ratings — Use 14 or 16 AWG wire rated for at least 75°C.

Figure 2

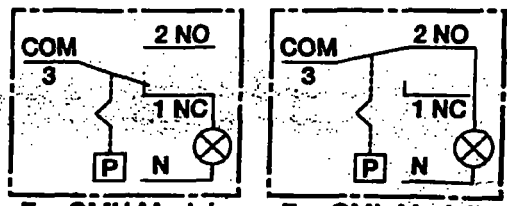

For GMH Models — For GML Models

(Switch Positions Shown With Pressure Applied)

Switching Functions				
	Manual Reset, High Limit		Manual Reset, Low Limit	
When Pressure...	3-1	3-2	3-1	3-2
Reaches setpoint	Opens	Closes	Opens after manual reset	Closes after manual reset
Drops below setpoint	Opens after manual reset	Closes after manual reset	Closes	Opens
Then reaches setpoint again	Opens	Closes	Opens after manual reset	Closes after manual reset

3 & 1 terminals are used for high limit.
3 & 2 terminals are used for low limit.

BOM# 736

DUNGS®

VPS 504
Installation Manual

SPECIFICATIONS

The Valve Proving System VPS 504 checks that both safety shutoff valves in a DMV 700 combustion gas train are fully closed before either a system start-up or after shutdown when wired and interlocked with a suitable flame monitoring relay as shown in the wiring diagrams on page 2. The VPS 504 will halt the start-up sequence to a burner if it detects an open safety shutoff valve, thus preventing ignition under dangerous conditions.

Gas
natural gas, propane, noncorrosive gases, and air

Maximum Operating Pressure
7 psi

Electrical Rating
120 Vac / 60 Hz

Power Consumption
during pump period 60 VA
during standby 17 VA

Contact Rating
Run T5: 4 A res, 2 FLA @ 120 Vac / 60 Hz
Alarm T3: 1 A res, 0.5 FLA @ 120 Vac / 60 Hz

Enclosure
NEMA 12

Ambient/Fluid Temperature
5° F to 140° F

Materials in Contact with Gas
housing: cast aluminum
rubber components: NBR-based rubber

Controller Duty Factor
100% duty cycle
maximum 20 test cycles / hour

Test Volume
less then 0.14 cft

Test Period
~10 sec. for test volume < 0.5 cft
> 10 sec. for test volume > 0.5 cft
maximum test period = 26 seconds

Maximum Allowable Leakage Under Worst Case Conditions
1 cft / hour

Mounting Position
upright vertical to horizontal

Approvals
UL Recognized Component: File No. MH 17004, Guide No. MJAT2

INSTALLATION

- **Read these instructions carefully.**
- **Failure to follow them and/or improper installation may cause explosion, property damage and injuries.**
- **Installation must be done with the supervision of a licensed burner technician.**
- **The system must meet all applicable national and local code requirements.**
- **Check the ratings given in the specifications and on the Valve Proving System to make sure that it is suitable for your application.**
- **Never perform work if gas pressure or power is applied, or in the presence of an open flame.**
- **Protect surfaces. Make sure that seals and O-rings are clean and in good condition.**
- **Once installed, perform a complete checkout including a gas leak test.**
- **Label all wires prior to disconnection when servicing VPS 504. Wiring errors can cause improper and dangerous operation.**
- **Verify proper operation after servicing.**

Location

The VPS 504 can be mounted directly to the DMV 700 ports 1 & 2.

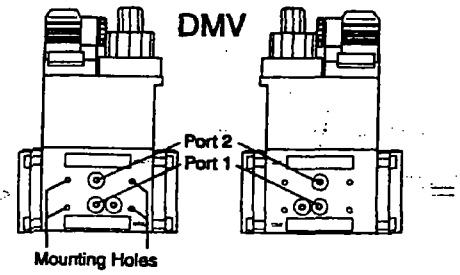

Mounting

The gas supply must be shut off and the DMV 700 series valve must be de-energized before mounting the VPS 504. Disconnect all power to the valves and the valve proving system before beginning to prevent electrical shock and equipment damage.

Recommended Mounting Procedure

- Use the M 4 x 15 mm self tapping socket head screws supplied with the VPS 504 to cut the threads in the 4 predrilled holes in the side of the DMV valve body at the desired mounting position.

OPERATION

Operating Sequence on Burner Start-up

The VPS 504 becomes energized when all limits and the burner operating switch are closed. At that point, the internal motor pumps gas from the up stream side of the main safety shut off valve into the manifold between the two safety shut off valves.

During the test period the integrated differential pressure senor monitors the manifold pressure. It will trip when the gas pressure between the shut off valves is increased by approximately 8" W.C. compared to the pressure upstream of the main valve. When the test pressure is attained the motor pump switches off.

The amber light on the VPS 504 flashes all the time to indicate that a test is in progress.

If the manifold between the two safety shut off valves has no detectable leak, the "RUN" T5 contact is energized within less than 26 seconds. The release time is dependent on the test volume (max. 0.14 cf). The amber light glows steadily after the test period.

If the VPS 504 is wired as shown in diagram 1 the contact 1CR1 (5) closes and the flame safeguard is activated.

If the test pressure of 8" W.C. can not be attained during the test period of 26 seconds the manifold between the two safety shut off valves has a detectable leak. The amber light turns off, the red light turns on, and the "ALARM" T3 contact (3) is energized.

A manual reset can be performed by pressing the red button. The VPS 504 will start a new test run.

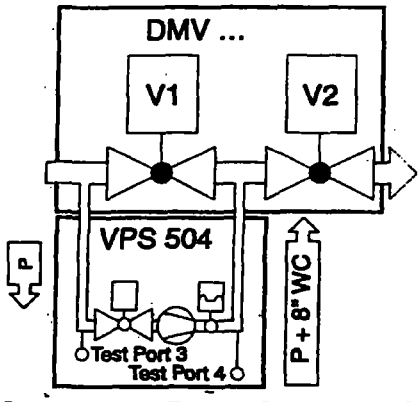

Operating Sequence on Burner Start-up and Shutdown

To operate the VPS 504 on burner start-up and shutdown additional interface equipment has to be provided. A typical wiring is shown in diagram 2.

Two additional time delayed relays are necessary to toggle the supply power to the VPS 504 either through the limit switches (9) on start-up or through the contacts 1TD1 and 2TD2 (2) on shut down. The time delay should be between 2 and 5 seconds.

The contact 2CR1 (13) provides a means to operate a blower in case the VPS 504 energizes the "ALARM" contact (3).

The relay 1CR (9) initializes a VPS 504 test run in case the flame safeguard energizes the alarm terminal.

The VPS 504 will start a test cycle when the main power switch (1) is closed. The contact 1TD3 (4) prevents a burner start-up without testing after the initial test.

MAINTENANCE

Functional Test

- The VPS 504 is a protective device. Check it at least once a month for proper operation.

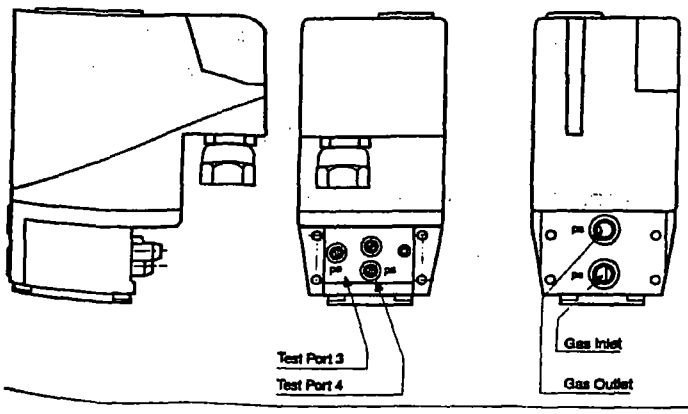

A recommended test procedure is:

- Shut off all gas supply to the system.
- Start the VPS 504.
- Open the screw plug in the test port 4 during the pumping time to simulate a gas leak in the manifold between the two safety shut off valves.
- If the VPS 504 does not detect the leak, immediately shut down the system, remove the VPS 504, and return it to the factory for replacement.
- **CAUTION:** All gas piping and test ports must be properly tightened before any gas is reapplied to the system.
- **CAUTION:** Return the VPS 504 to the factory for repair or replacement. Do not try to repair the unit by yourself. You may interfere with its normal operation and cause a fire or explosion. If you disassemble the VPS 504, you will void the approvals, the factory warranty and exchange policies.

- Use a 3 mm hex key wrench to turn the screws. After cutting the threads remove the M 4 x 15 mm socket head screws.
- Make sure the 10.5 x 2.25 mm O-rings are fitted into the grooves on the back of the VPS 504.
- Make sure the O-rings are clean and in good condition.
- Remove the G 1/8 plugs from the port 1 and port 1 of the valve with a 3 mm hex key wrench.
- Make sure that the surface is clean and in good condition. If necessary clean the surfaces.
- Mount the VPS 504 onto the ports using the M 4 x 15 mm socket head screws.
- Make sure that the O-rings are located in the grooves.
- Tighten the screws snugly, not exceeding 22 lb-in. Do not overtighten.
- Perform a leak test to verify that no leakage occurs around the O-rings.

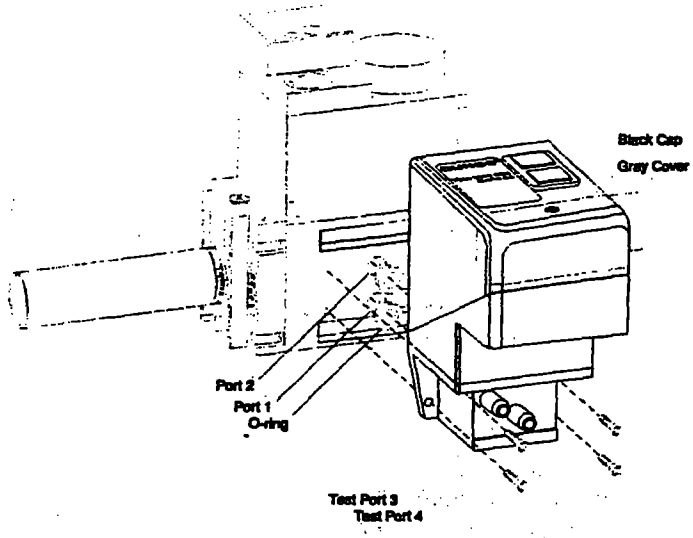

WIRING

- Disconnect all power to the VPS 504 before beginning the wiring to prevent electrical shock and equipment damage.
- All wiring must comply with local electrical codes, ordinances, and regulations.
- Do not exceed the terminal ratings given in the specifications and on the VPS 504.
- Remove the black cap on top of the VPS 504.
- Loosen the screw which secures the gray cover.
- Remove the cover.
- Route the wires through the conduit connector.
- Connect the wiring to the appropriate screw terminals on the terminal strip.
- Replace the gray cover, the screw, and the black cap.

A typical wiring diagram for operating the VPS 504 on burner start-up only is shown in diagram 1. A typical wiring diagram for operating the VPS 504 on burner start-up and shut down is shown in diagram 2.

The interface equipment (1CR, 2CR, 3CR, 1TD, 2TD), the flame safeguard and auxiliary equipment shown in the wiring diagrams are customer supplied.

- **CAUTION:** Frequency converters with insufficient shielding can cause faults in the VPS 504 as the result of transients. Make sure that the equipment is provided with sufficient shielding.

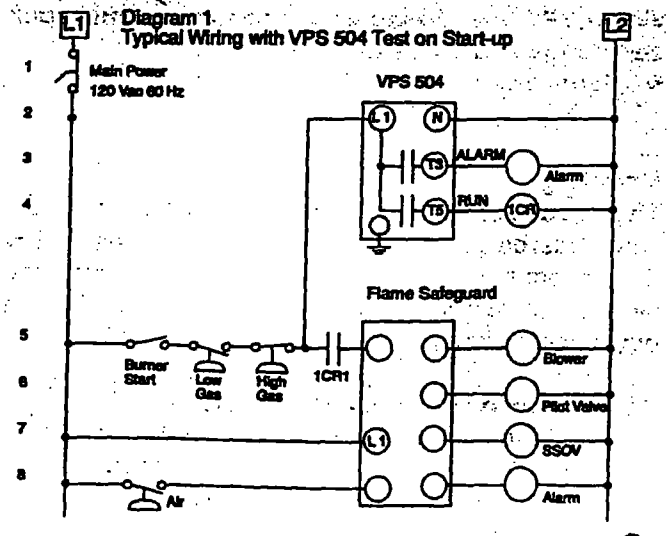

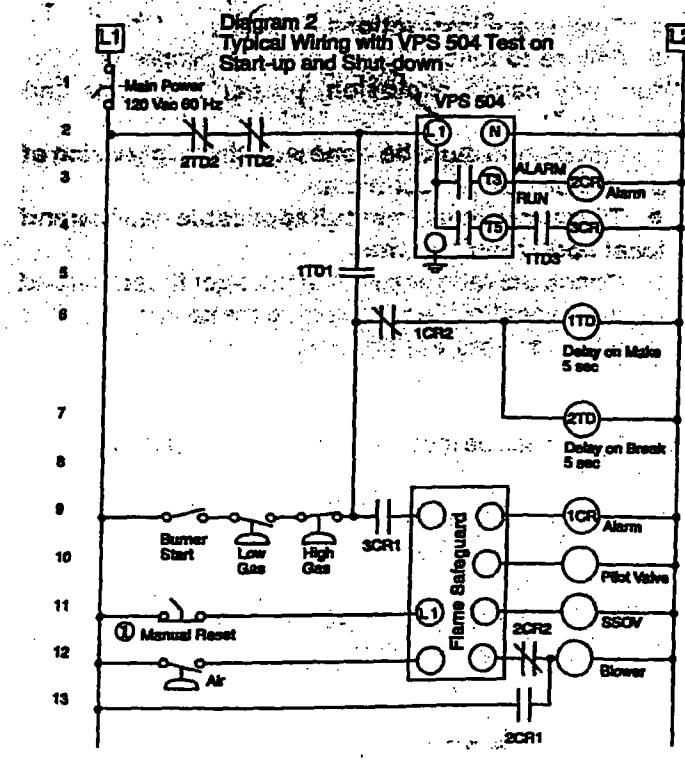

① required if resetting the flame safeguard in an alarm does not de-energize 1CR

Karl Dungs, Inc.
2740 Patton Road - Roseville - MN 55113 - USA - Phone: 651-635-0410 - Fax: 651-635-0813

DIMENSIONS

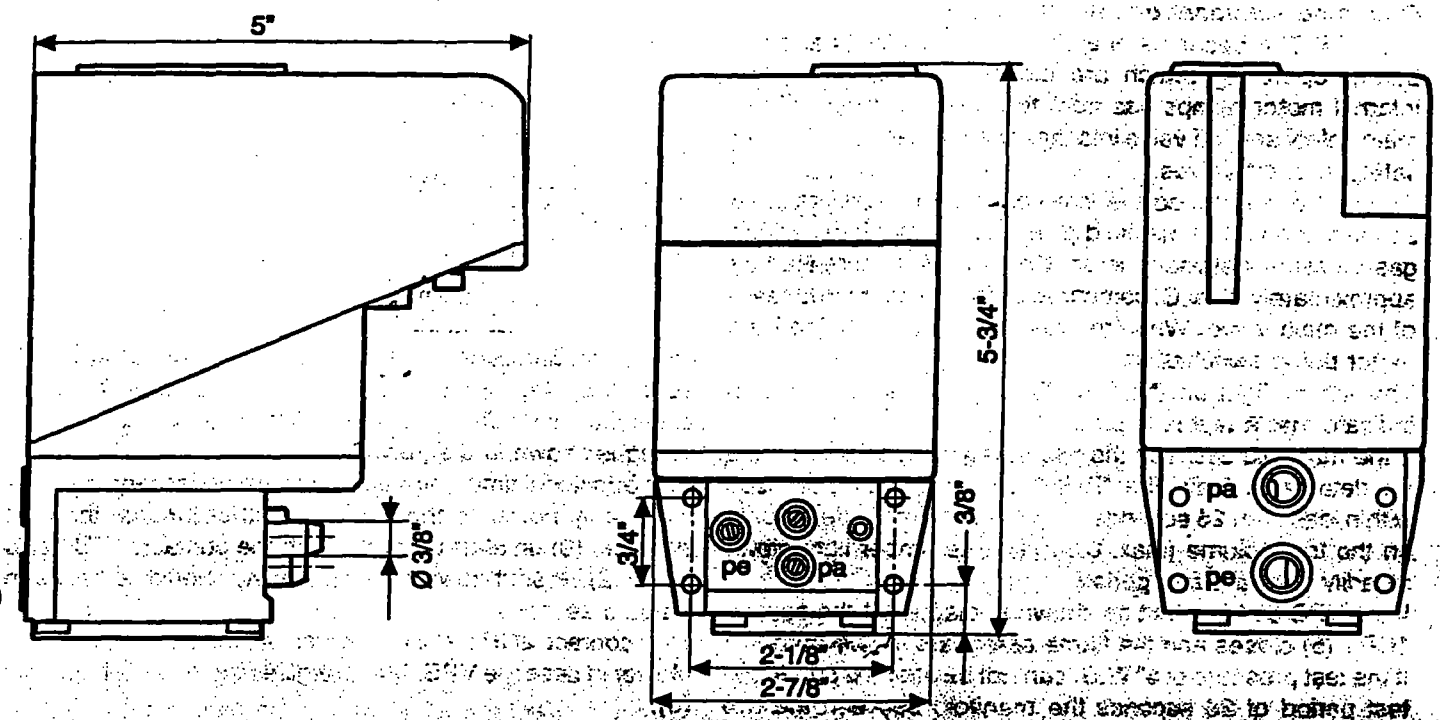

ACCESSORIES

The VPS 504 can be used with a Dungs 1/2" NPT to 2" NPT MVD 500 and MVDLE 200 series safety shut off valves.* When mounting the VPS 504 on a DUNGS single solenoid valve the adapter set # D 205 360 is required.

- **CAUTION:** the maximum test volume of 0.14 cft between the two valves cannot be exceeded. The maximum allowable leakage under worst condition will be 2 cft/hour.

Determination of the test volume:

test volume = volume of valve 1 + volume of intermediate pipe part + volume of valve 2

The maximum applicable pipe lengths of schedule 30 pipe between the valves for the different pipe sizes is give in the table below.

NPT	1/2"	3/4"	1"	1-1/4"	1-1/2"	2"
length	60'	40'	20'	15'	8'	5'

VPS 504/6 Order Number: D 221 073

Adapter Order Number: D 205 360

Karl Dungs, Inc.
2740 Patton Road - Roseville - MN 55113 - USA - Phone: 651-635-0410 - Fax: 651-635-0310

CM 100

BOM# 737

DUNGS®

Operating Sequence on Burner Start-up and after Shut-down

The Control Box provides the relays and logic to operate the DUNGS® valve proving systems (VPS 504 and VDK 200A) on burner start-up and after shutdown. The test cycle starts when all limits and the burner operating switch are closing/opening or when the alarm terminal of the flame safeguard [7] becomes energized due to a system alarm.

At that point, the internal motor of the VPS 504/VDK 200A pumps gas from the upstream side of the main safety shut off valve into the manifold between the two safety shutoff valves.

During the test period the integrated differential pressure sensor monitors the manifold pressure. It will trip when the gas pressure between the shut off valves is increased by approximately 8" (VPS 504)/16" (VDK 200A) W.C. compared to the pressure upstream of the main valve. When the test pressure is attained the motor pump switches off.

The amber light on the VPS 504/VDK 200A flashes all the time to indicate that a test is in progress.

If the manifold between the two safety shut off valves has no detectable leak, the "RUN" contact [2] is energized within less than 26 (VPS 504) / 30 (VDK 200A) seconds. The release time is dependent on the test volume. The amber light glows steadily after the test period.

If the VPS 504/VDK 200A is wired to the Control Box as shown in the diagram the contact J5 [9] closes and the flame safeguard is activated.

- **Note:** When the main power switch [1] will be closed the VPS 504/VDK 200A will start one initial test. If the manifold between the two safety shutoff valves has no detectable leak, the contact J5 [9] will stay open and will prevent a system start-up without an additional test run.

If the test pressure can not be attained during the test period the manifold between the two safety shut off valves has a detectable leak. The amber light turns off, the red light turns on, and the "ALARM" contact [3] is energized.

If the blower is wired to the Control Box as shown in the wiring diagram the contact J1 [6] closes and the blower is activated.

The contact J5 [9] will stay open and will prevent a system start-up.

A manual reset can be performed by pressing the red reset button on either the VPS 504 or the VDK 200A. The VPS 504/VDK 200A will start a new test run.

Refer to the VPS 504 or VDK 200A spezification sheets for more operation details.

CM 100 CONTROL MODULE ORDER NO. 46022

Typical Wiring with VPS 504/VDK 200A and Flame Safeguard

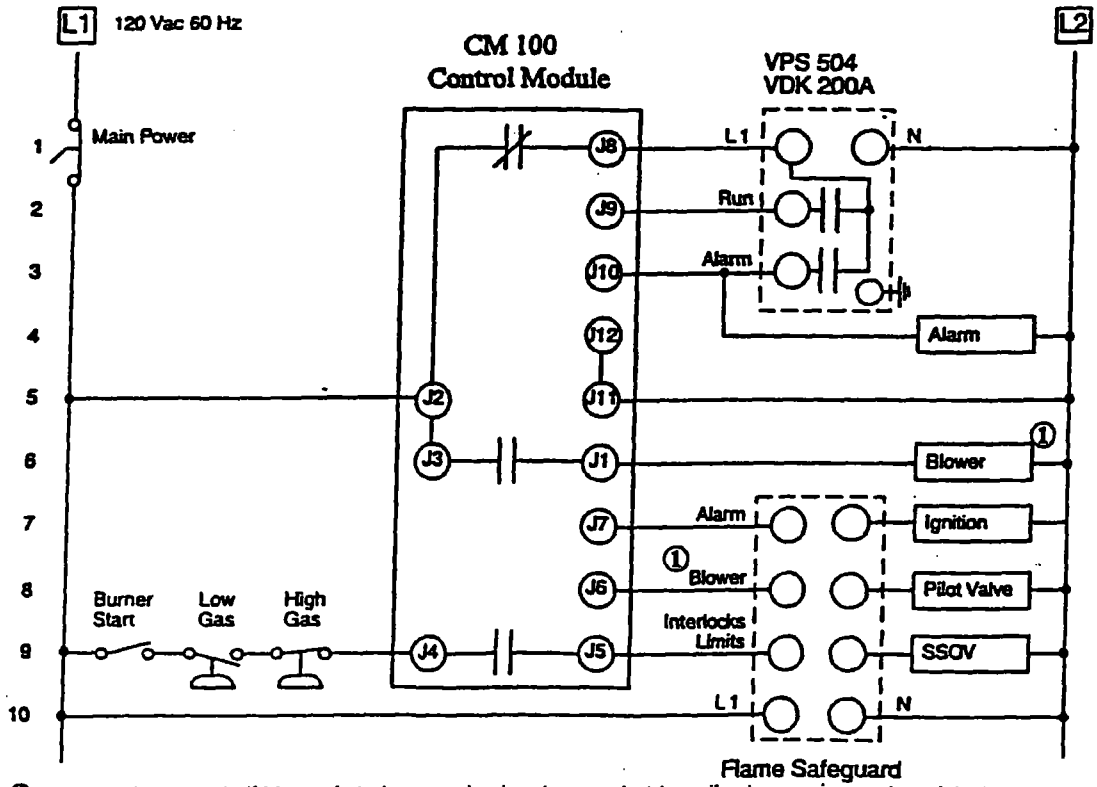

① connect blower to J1 if blower is to be energized on burner shutdown if valve proving system detects an open valve. Otherwise connect blower directly to flame safeguard.

Karl Dungs Inc.
2740 Patton Road - Roseville - MN 55113 - USA - Phone: 612-635-0410 - Fax: 612-635-0813

CM100
Control Module
Installation Manual

DUNGS®

SPECIFICATIONS

The Control Box incorporates the relays and logic nessessary to operate the DUNGS® valve proving systems VPS 504 and VDK 200A on a system start-up and after shutdown when wired and interlocked with a suitable flame monitoring relay as shown in the wiring diagram on page 2. The valve proving system will halt the start-up sequence to a burner if it detects an open safety shutoff valve, thus preventing ignition under dangerous conditions. On shutdown, an open valve detection will cause a manual lock out requireing reset, an alarm contact is energized, and an optional blower terminal is energized.

Electrical Rating
120 Vac / 60 Hz

Ambient Temperature
5° F to 140° F

Contact Rating

Input

J2, J3:	13 A res @ 120 Vac / 60 Hz
J4:	12 A res @ 120 Vac / 60 Hz
J6, J7:	1 A res @ 120 Vac / 60 Hz
J9, J10:	1 A res @ 120 Vac / 60 Hz

Output

J1:	13 A res @ 120 Vac / 60 Hz
J5:	12 A res @ 120 Vac / 60 Hz
J8:	6 A res @ 120 Vac / 60 Hz

Enclosure
NEMA /EEMAC Type 1
CSA Enclosure Type 1
IEC 529, IP 30

Approvals:
UL Recognized Component: File MH17004; Guide No. MJAT2

INSTALLATION

- **Read these instructions carefully.**
- **Failure to follow them and/or improper installation may cause explosion, property damage and injuries.**
- **Installation must be done with the supervision of a licensed burner technician.**
- **The system must meet all applicable national and local code requirements.**
- **Check the ratings given in the specifications to make sure that it is suitable for your application.**
- **Never perform work if gas pressure or power is applied, or in the presence of an open flame.**
- **Once installed, perform a complete checkout.**
- **Label all wires prior to disconnection when servicing the Control Box. Wiring errors can cause improper and dangerous operation.**
- **Verify proper operation after servicing.**

- Disconnect all power to the VPS 504/VDK 200A and the flame safeguard before beginning wiring to prevent electrical shock and equipment damage.
- All wiring must comply with local electrical codes, ordinances, and regulations.
- Do not exceed the terminal ratings given in the specifications.
- Loosen the screw which secures the cover.
- Remove the cover.
- Route the wires through the conduit connectors.
- Provide adequate strain relief.
- Connect the wiring to the appropriate screw terminals on the terminal strip.
- Replace the cover and tighten it.

A typical wiring diagram for operating the VPS 504/VDK 200A on burner start-up and after shutdown is shown in the wiring diagram.

- Connect the blower to J1 [6] and the blower terminal of the flame safeguard to J6 [8] if the blower is to be operated when the valve proving system detects an open valve. The connection from the flame safeguard blower terminal to J6 [8] is required to provide proper operation of the blower during a normal start-up procedure.
- **Note:** If this safety feature is not required, connect the blower directly to the flame safeguard. Do not make the connection from the flame safeguard blower terminal to J6 [8]. Terminal J1 [6] can be used to energize an alarm horn. The interface equipment, the VPS 504/VDK 200A, the flame safeguard and auxiliary equipment shown in the wiring diagrams are customer supplied.

- **CAUTION:** Frequency converters with insufficient shielding can cause faults in the VPS 504/VDK 200A as the result of transients. Make sure that the equipment is provided with sufficient shielding.

Operating Sequence on Burner Start-up and after Shut-down

The Control Box provides the relays and logic to operate the DUNGS® valve proving systems (VPS 504 and VDK 200A) on burner start-up and after shutdown. The test cycle starts when all limits and the burner operating switch are closing/opening or when the alarm terminal of the flame safeguard [7] becomes energized due to a system alarm.

At that point, the internal motor of the VPS 504/VDK 200A pumps gas from the upstream side of the main safety shut off valve into the manifold between the two safety shutoff valves.

During the test period the integrated differential pressure sensor monitors the manifold pressure. It will trip when the gas pressure between the shut off valves is increased by approximately 8" (VPS 504)/16" (VDK 200A) W.C. compared to the pressure upstream of the main valve. When the test pressure is attained the motor pump switches off. The amber light on the VPS 504/VDK 200A flashes all the time to indicate that a test is in progress.

If the manifold between the two safety shut off valves has no detectable leak, the "RUN" contact [2] is energized within less than 26 (VPS 504) / 30 (VDK 200A) seconds. The release time is dependent on the test volume. The amber light glows steadily after the test period.

If the VPS 504/VDK 200A is wired to the Control Box as shown in the diagram the contact J5 [9] closes and the flame safeguard is activated.

- **Note:** When the main power switch [1] will be closed the VPS 504/VDK 200A will start one initial test. If the manifold between the two safety shutoff valves has no detectable leak, the contact J5 [9] will stay open and will prevent a system start-up without an additional test run.

If the test pressure can not be attained during the test period the manifold between the two safety shut off valves has a detectable leak. The amber light turns off, the red light turns on, and the "ALARM" contact [3] is energized.

If the blower is wired to the Control Box as shown in the wiring diagram the contact J1 [6] closes and the blower is activated.

The contact J5 [9] will stay open and will prevent a system start-up.

A manual reset can be performed by pressing the red reset button on either the VPS 504 or the VDK 200A. The VPS 504/VDK 200A will start a new test run.

Refer to the VPS 504 or VDK 200A spezification sheets for more operation details.

CM 100 CONTROL MODULE ORDER NO. 46022

Typical Wiring with VPS 504/VDK 200A and Flame Safeguard

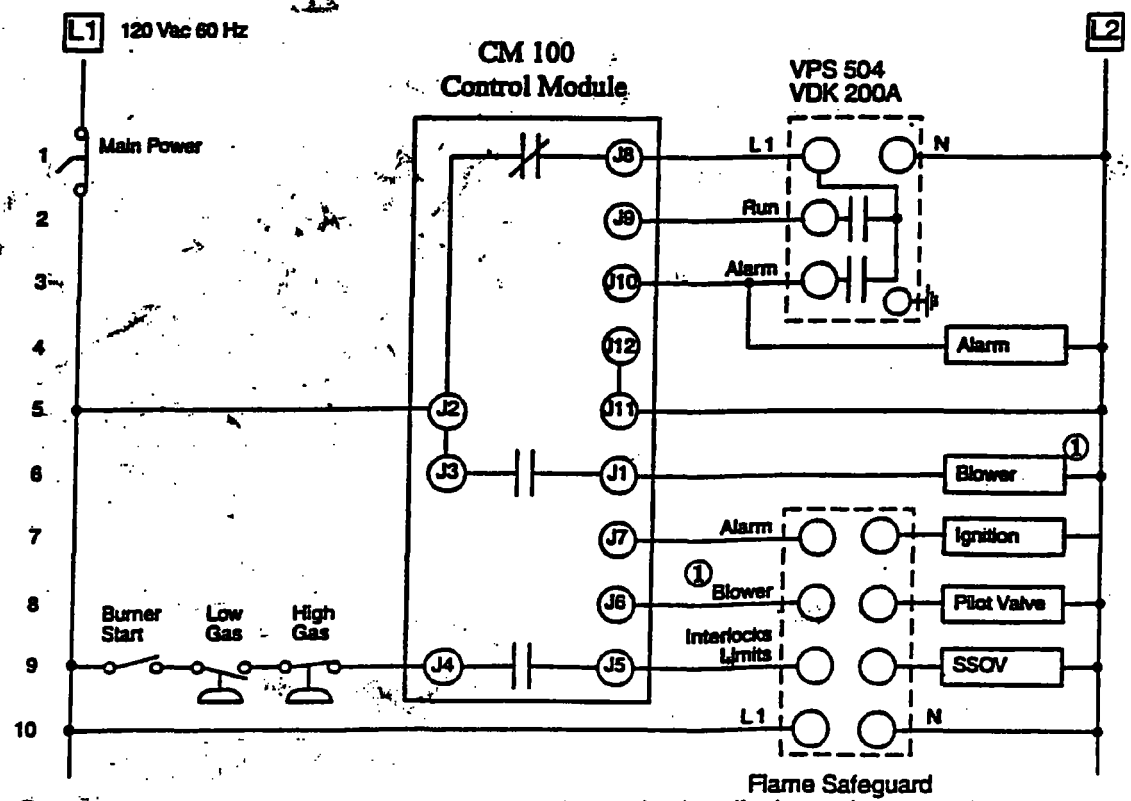

① connect blower to J1 if blower is to be energized on burner shutdown if valve proving system detects an open valve. Otherwise connect blower directly to flame safeguard.

Karl Dungs Inc.
2740 Patton Road - Roseville - MN 55113 - USA - Phone: 612-635-0410 - Fax: 612-635-0813

BOM# 738

DUNGS®

Closed Position Indicator
CPI 400

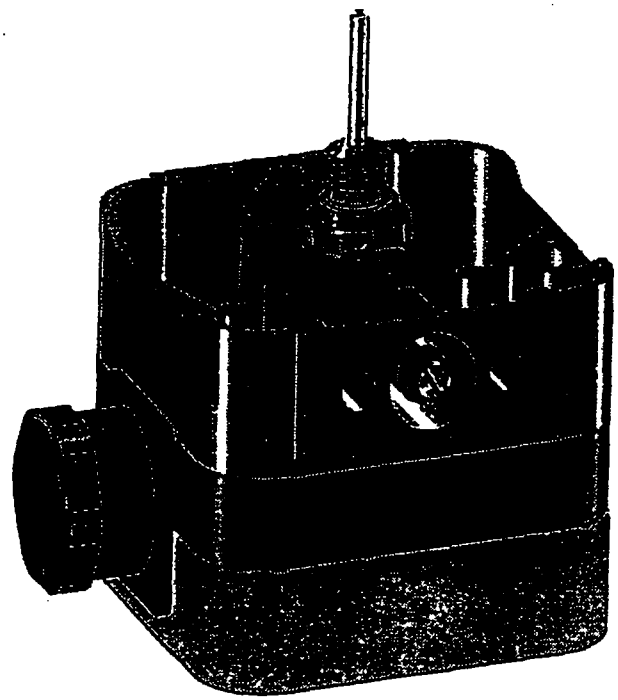

Description
The DUNGS® Closed Position Indicator CPI 400 combines visual and electrical valve position indication for the DUNGS® MV series and DMV series safety shut-off valves. The CPI 400 attaches to the bottom of the valve and visually and electrically displays when the valve is in either the closed or open position. When the valve is closed, the valve operator can observe the red light of the indicator through the clear plastic and the switch is in the NO position. When the valve opens the visual indicator is showing no light and the switch is in the NC position.

Application
The DUNGS® CPI 400 is a necessary part in order to use the DUNGS® MV series and DMV series safety shut-off valves on NFPA gas trains (> 400,000 Btuh). The CPI 400 can be used with natural gas, propane, other non corrosive gases, and air.

Benefits
- Electrical indication of the valve closed position complies with NFPA 86 requirements
- Compact design saves installation space
- One switch for all DUNGS® safety shutoff valves reduces order efforts and inventory requirements

Features
All DUNGS® components are built to ISO 9001 manufacturing and test standards to ensure safe, reliable operation.
- Visual and electrical indication of valve position in one housing
- Field Adjustable setpoint
- Maximum operating pressure 15 psi
- Screw terminals for wiring
- 1/4" NPT conduit connector
- DIN connector optional
- UL and FM approved accessory for all DUNGS® safety shutoff valves

MARSHALL W. NELSON & ASSOC.
SALES & SERVICE
4155 Sibley Memorial Highway
Eagan, MN 55122-1904
PHONE: 612-890-0720 FAX: 612-890-7009

Edition 97

BOM# 738

DUNGS®

CPI 400
Installation Manual

SPECIFICATIONS

Closed position indicator that visually and electrically displays when the valve is either in closed or open position. Mounts directly to the DMV 700 series valves, MVD 500 series valves, and/or MVDLE 200 series valves.

Gases
natural gas, propane, noncorrosive gases, and air

Switch
SPDT

Switch Action
valve open: switch in NC position, light off
valve closed: switch in NO position, light on

Contact Rating
10 A res., 8 FLA, 48 LRA @ 120 Vac

Enclosure
NEMA 12

Ambient/Fluid Temperature
40° F to 150° F

Maximum Operating Pressure
15 psi

Materials in Contact w/ Gas
housing: brass, steel
rubber components: NBR-based rubber

Electrical Connection
screw terminals and 1/2" NPT conduit connector

Approvals:
UL Unlisted Component: File No. MH16727 (SP)
FM Approved: Report J.I. 1Z6A0.AF (7411)

INSTALLATION

- Read these instructions carefully.
- Failure to follow them and/or improper installation may cause explosion, property damage and injuries.
- Installation must be done with the supervision of a licensed burner technician.
- The system must meet all applicable national and local code requirements.
- Check the ratings given in the specifications and on the switch to make sure that it is suitable for your application.
- Never perform work if gas pressure or power is applied, or in the presence of an open flame.
- Protect surfaces. Make sure that seals and O-rings are clean and in good condition.
- Once installed, perform a complete checkout including a gas leak test.
- Label all wires prior to disconnection when servicing switches. Wiring errors can cause improper and dangerous operation.
- Verify proper operation after servicing.

Location
The CPI 400 attaches to the bottom of the DMV, FSAV, MVD, and MVDLE series valves and visually and electrically displays when the valve is either in closed or open position. When the valve is closed the valve operator will observe the red light of the indicator through the clear plastic and the switch is in the NO position. When the valve opens the visual indicator's light is off and the switch is in the NC position.

Mounting
- The valve must be de-energized and its gas supply shut off before mounting the CPI 400.
- Disconnect all power to the switch before beginning to prevent electrical shock and equipment damage.

Recommended Mounting Procedure
- Remove the plug and the O-ring in the bottom of the valve with a 3/16" (5mm) hex key wrench. This is the tap where the Closed Position Indicator goes. On the DMV series valves only one CPI 400 can be mounted due to space limitations.
- Clean the mounting surface around the port.
- Make sure the O-ring and the groove are clean and in good condition.
- Insert the brass adaptor and its O-ring.
- Turn the CPI brass adaptor by hand clockwise until it is sufficiently tightened.
- Use a 9/16" (14 mm) open end wrench and turn 1/4 to 1/2 additional turns (after finger tight). DO NOT overtighten.
- Perform a leak test to verify that no leakage occurs around the O-ring.
- When the installation is tight mount the CPI housing onto the brass adaptor.
- Push the housing towards the valve. There should be no visible gap between the adaptor and the housing.
- Turn the housing in the desired direction for the electrical connection. Tighten the set screw in the side tap so that the CPI can still be rotated clockwise.

Karl Dungs Inc.
2740 Patton Road • Saint Paul • MN 55113 • USA • Phone: 651-635-0410 • Fax: 651-635-0813

Wiring

- Disconnect all power to the CPI 400 before beginning the wiring to prevent electrical shock and equipment damage.
- All wiring must comply with local electrical codes, ordinances, and regulations.
- Do not exceed the switch ratings given in the specifications and on the switch.
- Remove the clear cover from the switch.

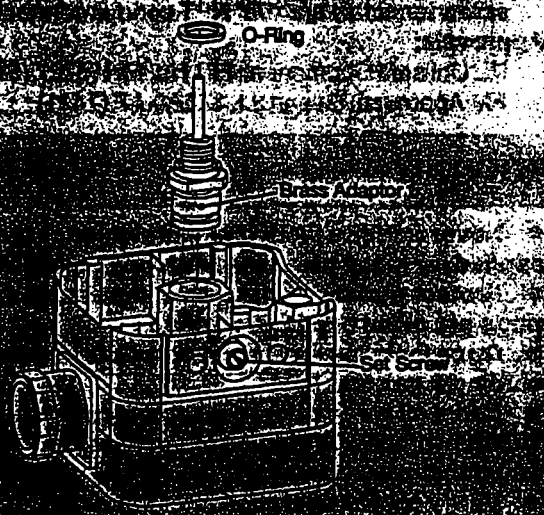

- Route the wires through the conduit connector.
- Connect the wiring to the appropriate screw terminals on the terminal strip.
- Recommended wiring:
- COM to the L1, Ground to ground, NO to the Proof of Closure terminal of your Flame Safeguard, and N to L2. The light shall be on when the valve is closed (FM requirement).
- After all connections have been made rotate the CPI to a position so that no torque is applied.
- Now tighten the screw in the side tap so that the CPI is locked.
- Do not turn the CPI 400 after tightening. The brass adaptor could be unscrewed and the assembly could leak.
- Perform a leak test to verify that no leakage occurs around the O-ring.

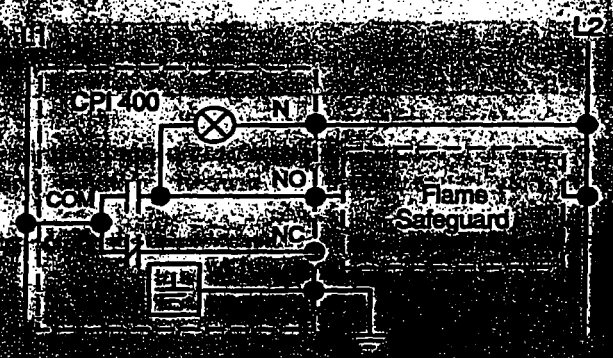

While valve is closed switch is in NO position, light is on.

OPERATION

Adjustment

- Disconnect all power to the CPI 400 before beginning the adjustment to prevent electrical shock and equipment damage.
- Remove clear cover.
- The valve must be closed.
- Turn the black knob counterclockwise until it comes to the stop.
- The circuit between the terminal COM and NO should be open.
- Then turn the knob slowly clockwise until the switch makes.
- Turn the knob about an additional 1/4" turn clockwise. The switch is now adjusted.
- Replace clear cover.

With all new installations this procedure should be adopted. Always begin adjustment with the circuit between the terminal COM and NO open.

Operation Testing

- Perform an additional leakage test to verify that no leakage occurs around the O-ring before putting the valve into service.
- Adjusting the CPI 400 and making the electrical connections may loosen the brass adaptor in the valve body causing gas leakage.
- Make sure no tension or torque is applied to the CPI 400 causing a counterclockwise rotation. Retighten if necessary.
- Test the indicator by opening and closing the valve with the gas supply shut off to visually and electrically insure that the indicator is working properly.

Order Number: D 224 253

Karl Dungs Inc.
2740 Patton Road • Saint Paul • MN 55113 • USA • Phone: 651-635-0410 • Fax: 651-635-0813

PROJ. NAME:	LBG Oxidizer		
CCC PROJ. N0:	99-216-1	TARGET SHIP DATE:	
PROJ. MANAGER:	Karl Witman	BOM ISSUE DATE:	

Revision No. 1 of 1

Item No.	Qty	CCC Part #	Description	MFG Part #	Vend. Code	P.O. #	Del. Date	Date Rec'd	Unit Cost	Ext. Cost	Actual Cost
403.1	1		Deadfront GFCI, 120VAC, 20A, Switch/Motor Rated	2081-W							
C620.1	1		Relay, DPDT	RH2BUL-120AC							
	1		Relay Socket, DPDT	SH2B-05							
C621.1	1		Relay, DPDT	RH2BUL-120AC							
	1		Relay Socket, DPDT	SH2B-05							
C623.1	1		Relay, 4PDT	RH4BUL-12OAC							
	1		Relay Socket, 4PDT	SH4B-05							
C624.1	1		Relay, DPDT	RH2BUL-120AC							
	1		Relay Socket, DPDT	SH2B-05							
C626.1	1		Relay, DPDT, Bifurcated Contacts	RY22SU-120AC							
	1		Relay Socket, DPDT, RY Style	SY2S-05							
C627.1	1		Relay, DPDT	RH2BUL-120AC							
	1		Relay Socket, DPDT	SH2B-05							
C629.1	1		Relay, 4PDT	RH4BUL-120AC							
	1		Relay Socket, 4PDT	SH4B-05							
C630.1	1		Relay, DPDT	RH2BUL-120AC							
	1		Relay Socket, DPDT	SH2B-05							

Item No.	Qty	CCC Part #	Description	MFG Part #	Vend. Code	P.O. #	Del. Date	Date Rec'd	Unit Cost	Ext. Cost	Actual Cost
C249.1	1		Relay, DPDT	RH2BUL-120AC							
	1		Relay Socket, DPDT	SH2B-05							
C273.1	1		Relay, DPDT	RH2BUL-120AC							
	1		Relay Socket, DPDT	SH2B-05							
C146.1	1		Auxillary Contact For LCI Series Contactor	LA8DN11							
	1		Contactor, IEC, 3P, 600V, 120V Coil, 1 N.O Contact	LC1D0910G6							
C160.1	1		Contactor, IEC, 3P, 600V, 120V Coil, 1 N.O Contact	LC1D0910G6							
CB121.1	1		Circuit Breaker, 1P, 480V, 4 Amp, Equipment Protection	S271-K4							
CH412.1	1		Chart Recorder DR45AT-1111-00-000-0-000P00-0	DR4500A							
DSC101.1	1		Disconnect, Non Fusable, 80 Amp, 600V, 3P, DIN	OT100E3							
DSC108.2	1		Heavy Duty Disconnect Switch, 3 Blade, Single Throw, 30A, Non fusible	HU361							
F106.1	3		Fuse, Class J, Time Delay, 30 Amp, 600V, 300K AIR	LPJ-30SP							
F108.1	3		Fuse, Class J, Time Delay, 12 Amp, 600V, 300K AIR	LPJ-12SP							
F115.1	3		Fuse, Class CC, Time Delay, 5 Amp, 600V, 20K AIR	LP-CC-5							
F125.1	1		Fuse, Class FNQR, Rejection, 4 Amp, 600V, 200K AIR	FNQR-4							
F127.1	1		Fuse, Class FNQR, Rejection, 4 Amp, 600V, 200K AIR	FNQR-4							
F131.1	1		Fuse, Class FNQR, Rejection, 8 Amp, 600V, 20K AIR	FNQR-8							
FU433.1	1		Fuse, Class CC, Fast Acting,1/2 Amp, 600V, 200K AIR	KTKR-1							
FU454.1	1		Fuse, Class CC, Fast Acting,1/2 Amp, 600V, 200K AIR	KTKR-1/2							

Item No.	Qty	CCC Part #	Description	MFG Part #	Vend. Code	P.O. #	Del. Date	Date Rec'd	Unit Cost	Ext. Cost	Actual Cost
	2		Touchsafe Fuseholder, Class CC, 1P, 600V, 1/10-30A, DIN	CHCC1							
H121.1	1		Panel Heater, 120V, 300W, 40 Degree Remote Tstat	040150C1EW11K							
I463.1	1		Operator Panel, Optimate, 4x20 Char, 5 F Keys, 3 Ind Lights	OP-640-P							
L133.1	1		Transformer Light Module, 1 NC	ZB2-BW032							
L153.1	1		Transformer Light Module, 2 NO	ZB2-BW033							
L168.1	1		Transformer Light Module, 2 NO	ZB2-BW033							
MECH175.1	1		Disconnect Selector Handle, Defeatable, Lock, NEMA 3R	OHB2AJ							
MECH176.1	1		Touchsafe Fuseholder, Class CC, 3P, 600V, 1/10-30A, DIN,	CHCC3							
	1		Power Distribution Block, 3P, 2/0-#14, 195 Amp	63133							
	6		Touchsafe Fuseholder, Class J, 1P, 600V, 1-30A, DIN	JT60030							
	1		Touchsafe Fuseholder, Class CC, 1P, 600V, 1/10-30A, DIN	CHCC1							
MECH176.2	8		1' Wire Duct Cover	C1WH6							
	8		1' Wire Duct	E1X3WH6							
	3		DIN Rail, 35mm (1 meter sections)	9999NT13							
	1		Enclosure Data Packet, 12'x12	A-DP2							
	1		Enclosure Mounting Feet, Steel	C-MFK							
	1		Enclosure Padlock Handle	C-WHPTO							
	1		3 Hub Ground Strip	PK3GTA1							
	1		NEMA Hinge Kit	A-NADFK							

Item No.	Qty	CCC Part #	Description	MFG Part #	Vend. Code	P.O. #	Del. Date	Date Rec'd	Unit Cost	Ext. Cost	Actual Cost
	1		Interface Cable, Optimate to 405 Top Port (15 Pin)	OP-4CBL							
	1		Enclosure, Concept Series, 36'x36'x12', NEMA 4	C-SD363612							
	1		Enclosure Mounting Panel	C-P3636							
	1		Panel (used for inner door), 33'x33'	A-36P36							
OL108.1	1		Overload Relay, IEC, 5.5-8 Amps, Class 20 , 1P Sens.	LR2D1512							
OL115.1	1		Overload Relay, IEC, 2.5-4 Amps, Class 20 , 1P Sens.	LR2D1508							
PS430.1	1		Power Supply, 24VDC, 320ma	8440PS24							
PS453.1	1		Power Supply, 24VDC, 320ma	8440PS24							
S148.1	1		Selector Switch, 3 Pos, Spring LT to CTR, Green	ZB2-BK173							
S162.1	1		Selector Switch, 3 Pos, Spring LT to CTR, Green	ZB2-BK173							
SW131.1	1		Pushbutton, Mushroom, Momentary, Red	ZB2-BW64							
T129.1	1		Transformer, 1000VA, 240/480x120, Fuse Block Incl.	9070-TF1000D1							
U527.1	1		AB MicroLogix 1500 Base Unit, 12 VAC IN, 12 Relay Out	1764-24AWA							
	1		AB MicroLogix 1500 End Cap - I/O Termination	1764-ECR							
	1		AB MicroLogix 1500 Processor Unit	1764-LSP							
J570.1	1		AB MicroLogix 1500 16 Point In, 120VAC	1769-IA16							
J304.1	1		Temp Controller, 3300 series	DC330B-KE-203-23-0A0000-000							
J345.1	1		Temp Controller, 3300 series	DC330B-KE-203-23-0A0000-000							
J246.1	1		Flame Safety Programmer,	7256BT-6010NRH							
J373.1	1		High Limit; 120V; Type K ; 32-1112F; DIN; FM; Auto Reset	146D-1K3F-3100							

Item No.	Qty	CCC Part #	Description	MFG Part #	Vend. Code	P.O. #	Del. Date	Date Rec'd	Unit Cost	Ext. Cost	Actual Cost
	1		Flame Strenght Indicator; microamp meter	50200							
	1		Cable for Flame Strength indicator	CA50							
	1		Miscellaneous (Wire, Terminal Blocks, Etc.)								

Series 146

User's Manual

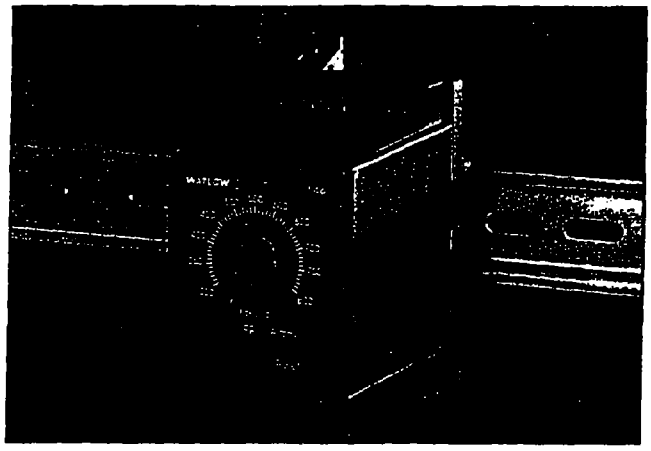

Safety Limit

BOM# U373.1

WATLOW

Watlow System Integrators
Freeport Industrial Park, PO Box 169
Decorah, IA 52101
Internet: http://www.watlow.com

W146-DA40-9820
May, 1998
Supersedes:
W146-DA30-9808

$5.00
Made in the U.S.A.

Printed on Recycled Paper
10% Postconsumer waste

General Description

The Watlow Series 146 is a DIN rail mount, safety limit with a thermocouple or RTD sensor input. The DIN rail mounting offers quick and easy installation with the use of simple hand tools. The limit may also be flush mounted.

The Series 146 is designed to meet the needs of a wide range of safety applications. Factory selectable options include high or low control mode with either manual or automatic reset on power loss.

The Series 146 has a LED for output status indication and can be ordered with an integral setpot, remote setpot or a fixed set point.

UL® is a registered trademark of Underwriter's Laboratories, Inc.

Specifications

Control Mode
- High or low limit, factory selectable
- Manual or automatic reset on power loss, factory selectable
- Latching alarm with manual reset on over temperature
- Internal and/or customer supplied external reset switch

Operator Interface
- LED indication of output status
- Dial scale calibrated to compensate for sensor non-linearities
- Integral set point
  - Factory selectable °F or °C temperature scale
- Fixed set point
  - Manufactured to specified value
- Remote set point
  - Factory selectable °F or °C temperature scale

Input
- *Thermocouple or RTD available*
- Thermocouple with automatic cold junction compensation
- Thermocouple may be isolated or grounded
- Thermocouple and RTD break protection de-energizes output
- 2 or 3 wire RTD input, platinum 100Ω @ 0°C calibrated for DIN 0.003850Ω/Ω °C curve or JIS 0.003916Ω/Ω °C curve

Output
- Electromechanical relay with contact suppression, 3A, Form C, SPDT: 3A @ 230V~(ac), 3A @ 30V=(dc), resistive
- Electromechanical relay with contact suppression, 10A, Form C, SPDT: 10A @ 230V~(ac) resistive, 5A @ 28V=(dc) resistive

Accuracy
- Calibration accuracy and sensor conformity: ±1% of span, at 77°F ±5°F (25°C ± 3°C) ambient and rated line voltage ± 1%
- Set point accuracy: ±3% of dial scale
- Accuracy span: 1000°F (540°C) minimum
- Temperature stability: 5μV/°F (9μV/°C) ambient, maximum referred to the input
- Voltage stability:±0.01% of span per % of rated line voltage

Agency Approvals
- UL® 873, 508, 991, File # E190020
- C-UL #24-93, File #E190020
- CE approved
  89/336/EEC Electromagnetic Compatibility Directive
  EN 50081-2: 1994 Emissions
  EN 50082-2: 1995 Immunity
  73/23/EEC Low-Voltage Directive
  EN 61010-1: 1993 Safety
  EN 60730-1, 60730-2-9
- FM 3545

Terminals
- Captive screw, cage clamp connection, 0.155" (4mm) max. width screwdriver blade. 22-12 wire gauge

Mounting
- DIN rail, DIN EN50022, 35mm x 7.5mm
- Sub-panel flush mounting

Power
- 120V~(ac), ±10%, 50/60 Hz
- 230V~(ac), ±10%, 50/60 Hz
- 24V~(ac), ±10%, 50/60 Hz
- 4VA power consumption

Operating Environment
- 32 to 131°F (0 to 55°C)
- 0 to 90% RH, non-condensing

Dimensions
- See Page 2

Weight
- 0.7 lb. (0.3kg)

BOM# CH412.1

Honeywell

DR 4500A Classic Series Circular Chart Recorder

Specification

Function

Honeywell's Classic Series recorder combines the simplicity of pen drawn analog traces with the sophistication of micro-processor controlled functions. This combination results in a user configurable recorder that is easily adapted to meet a variety of application requirements—from blast furnace to laboratory.

In addition to recording analog traces, the Classic Series recorder continuously displays process variable values in the selected engineering units.

Both one-pen and two-pen models accept inputs from any one of a variety of sensors or transmitters within the config-urable range limits. Also, models are available with one or two digital controllers to generate controlled output signals to operate valves, dampers, heating elements, etc. for process control.

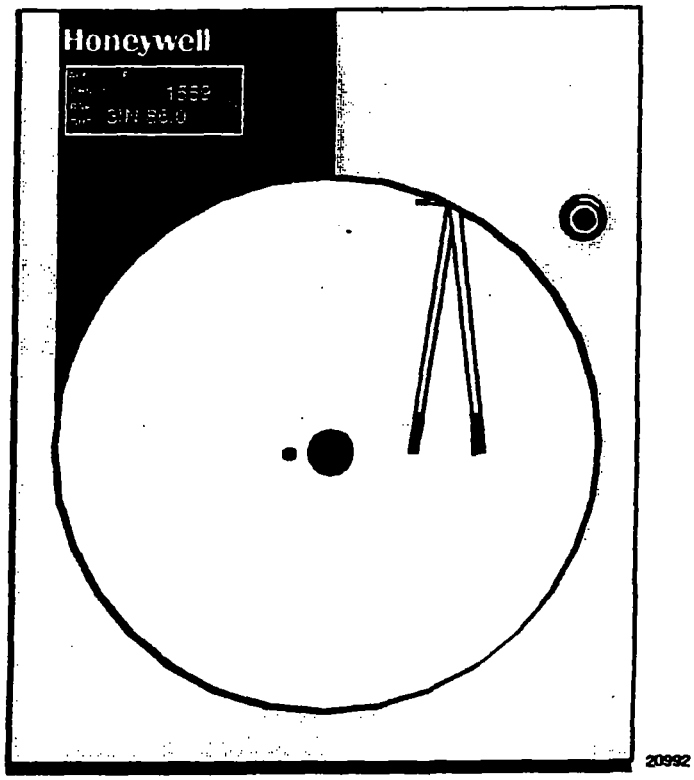

Figure 1—Classic Series recorder provides analog trace and continuous digital indication of process variable value.

Features

- ***Charts*** - Over 5000 preprinted charts are available to meet specific recording needs.
- ***User configurable*** - means that users can set and/or alter operating parameters to fit their requirements, including type of input, without recalibration.
  English language prompts, coupled with simple keystroke sequences, make configuring the recorder easy and straightforward.
- ***Operator Interface*** - includes clear, brilliant alphanumeric displays; indicators; deviation bargraph; and keypad for visual and tactile interaction.
- ***Ink cartridge*** - Disposable, fiber-tip ink cartridge for reliable recording with minimal maintenance.
- ***Control Output*** - up to two versatile PID digital controllers lets users configure the exact control action needed for their process.
- ***Alarms*** - Integral "soft" alarms are easily set by users to announce selected out-of-limit conditions.
- ***Setpoint Ramp*** - A single setpoint ramp is user programmable and is easily repeated and activated through the Run/Hold key.

User Configurable

In the Classic Series recorder, microprocessor control replaces conventional electro-mechanical recording techniques. This means that the recorder's capabilities are now primarily determined by its software.

Since Honeywell has preprogrammed a variety of functional capabilities into the recorder, a user only has to configure those functions that are specific for the given application.

The user configures the recorder by following English language

Printed in U.S.A. © Copyright 1998 — Honeywell Inc.

prompts that appear in the digital displays.

The configuration data (type of input, chart speed, chart range, alarm settings, tuning constants, etc.) are stored in non-volatile memory for safe keeping in the event of a power failure.

Operator Interface

Two digital displays present the process variable (PV) value and by key selection, the controller set point; controller output; deviation from reference input; dry bulb temperature; totalization value; or engineering units as desired. The lower display can also be set scroll or hold.

In configuration mode, digital displays are pre-empted by English language prompts and values that you use to enter configuration data. Indicators light to show alarm condition, which channel PV is on display, use of remote set point, which output relay is on, selected temperature unit, and controller's mode of operation.

A deviation bargraph lets operators tell at a glance if the process variable is at, above, or below the controller's setpoint.

The keypad through which configuration data is entered also serves as an integral automatic/manual station that provides bumpless transfer for controllers.

On two-pen models, the Hold key allows continuous display of one channel process variable while the recording action proceeds automatically.

Microprocessor Controlled Recording and Printing

Both the chart and the pen are driven by stepper motors which are controlled by the microprocessor for precise maintenance free operation.

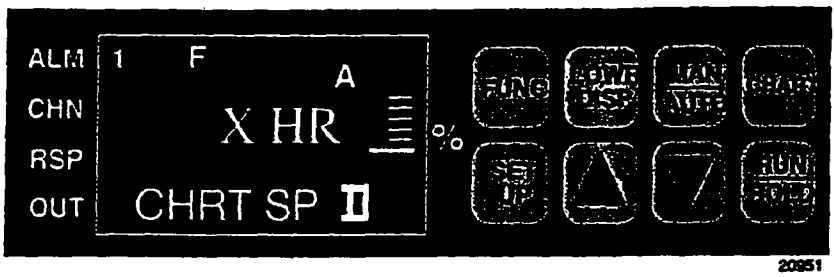

Figure 2—Operator interface includes displays and keypad for comprehensive interaction with the recorder and the process.

Since chart speed is configurable, users can easily alter the chart speed through the keypad. Gear changing or additional motors are no longer required.

The microprocessor uses the configured chart range data as well as the input data to determine the proper pen position.

The stepper motor accurately positions the pen drive without damping, thus eliminating the need for slidewire feedback gearing and drive cables.

A configurable deviation recording function lets users show graphically the difference between a reference input and a process variable input.

Users can designate the channel 1 input or enter a deviation setpoint value as the reference input. This is an example of the versatility derived from microprocessor controlled recording.

Input Processing

The input can be one of many standard low-level electrical signals. And, for models with 2 pens, a relative humidity (wet/dry bulb) actuation is available using 100 ohm platinum bulbs (α = 0.00385). The input type and range are user configurable for hassle-free actuation changes in the field.

Ranges are easily expanded and compressed within their span limitations to meet specific measurement needs. Users can select upscale or downscale sensor break protection for many of the actuations.

Each input is sampled at a rate of 3 times per second. Each sample is amplified and then converted to a digital signal which is isolated and passed to the microprocessor.

A digital filter with configurable time constants lets users apply input signal smoothing as desired.

All non-linear inputs are linearized by the microprocessor, using look-up tables that reside in the software. This allows mixed input actuations for 2-pen models to be recorded on a linear chart. Users can bypass linearization for recording on a non-linear chart.

An integral 24 Vdc power supply, along with 4-20 mA input configuration, allows direct operation with up to two transmitters without the need for any additional/external transmitter power supply.

To totalize a variable, such as a flow signal, users select the applicable input and set the digital display scaling factor through configuration. This eliminates the need for additional integration hardware including a mechanical counter. The totalizer has an eight digit display.

Also has capability to reset the totalizer remotely with digital inputs, and a low flow cutoff can be set in percent of range below which the applicable totalizer does not increment.

Digital Controller

The DR 4500A Series recorder controller (1 or 2 loops) includes an integral microprocessor-based PID controller.

A variety of output types, including a duplex variation for heat-cool applications, lets users select the output that is right for their final control element.

Depending on the output type users can configure the control action as On-Off, PID-A, PID-B or PD with Manual Reset.

As with the record functions, English language prompts quickly guide users through the entry of all the controller's configurable parameters.

Diagnostics

All DR 4500A Series recorders include self-diagnostic systems that check critical operations and provide error messages to alert users about detected faults.

Power-up self-diagnostics is a microprocessor controlled diagnostic program that runs tests on selected circuitry when the recorder is powered up.

A "key" test allows a user to initiate, on demand, a self-diagnostic routine that checks the keypad and front panel displays.

Construction

The DR 4500A Series recorder is housed in a molded case which can be panel or surface mounted.

A gasketed door with a glass or optional acrylic window, protects internal components from harsh industrial environments while allowing easy access to the chart and operator interface.

Circuitry is partitioned on printed circuit boards for ease of service.

A Heavy Duty Stainless Steel door is available as an option.

Process Interface

Power, input, and output wiring connect to terminations inside the case.

Knockouts in the sides and bottom of the case accept conduit connections for convenient wire entry.

Options*

- **Chart Illumination** — Lights the chart area to improve readability in lower light areas.
- **Alarm Output** — Ties "soft" alarms to up to two integral SPST relays to activate users external equipment.
- **Digital Input** — Allows users to initiate, from a remote location through two dry contact closures, selected recorder functions, such as switching from automatic to manual control mode, from direct to reverse controller action, or reset totalizer.
- **Control** — One or two PID controllers available
- **Optional FM Approved Control Output (4-20mA Current only)**
- **Acrylic Window**
- **Door Lock**
- **Heavy Duty Stainless Steel Door**
- **Blue or Gray Color Door**
- **UL Listing, FM Approval**
- **Customer ID Tag**
- **Auxiliary 4-20mA Output**
- **Flow Totalization**
- **CE Mark** - Conformity with 73/23/EEC, Low Voltage Directive and 89/336/EEC EMC Directive
- **RS485 Modbus RTU Communications** - Available April, 1998

*Restrictions apply – Not all of the options an be supplied together.

PLC Direct by Koyo

OP600 Series Operator Panels

OP–620
OP–640

Operator Interface
OptiMate Panels

BOM# I463.1

See Page 7–17 for specifications and power supply information.

See Page 7–37 for cable specification and ordering details.

See Page 7–34 for dimensions and installation information.

Both OP600 series operator panels have a broad range of operator input and display capabilities. The OP–WINEDIT software allows you to predefine up to 160 status or variable messages. Text messages, BCD, BCD Double, Binary, and Floating Point Math numbers can be displayed. Fixed point numbers can also be displayed. Both panels have five user-defined pushbuttons. Each pushbutton can be configured as momentary or alternating action. LED indicators in the upper left corner of each pushbutton illuminate when the pushbutton is turned ON. You can label the LEDs by inserting label sheets under the lens cover. Simply remove the plastic bezel to gain access to the label-cover. Labels can be created using the OP–WINEDIT software.

In addition to these common features, the two panels have their own unique features which are described below.

See Page 7–28 for an example of how user defined messages are entered in an OP–1510 panel. The procedure for this panel is similar.

See Page 7–22 for an example of how the pushbuttons are used in an OP–1224 panel. The procedure for these panels is similar.

OP–620

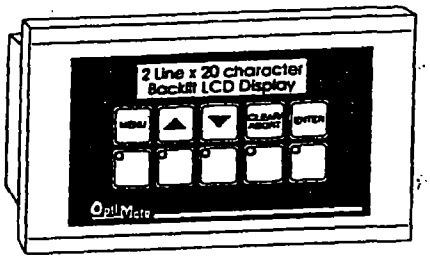

- **Menu Tree:** The OP–WINEDIT software allows you to create a menu tree. This can be used to select the functions for which you are entering data, i.e. setpoints, alarms, high and low limits, etc.
- **Interactive Messages:** Messages can be interactive to prompt the operator to enter data using the up/down arrow keys.
- **Data Adjustment:** Variables can be incremented or decremented using the up/down arrow keys, which is useful for setting setpoint limits.
- **2 Line Message Display:** Has a 2 line by 20 character LCD display.

See the examples starting on Page 7–28 for examples of how a menu tree, interactive messages and data adjustments are entered in an OP–1510 panel. The procedures for this panel are similar.

OP–640

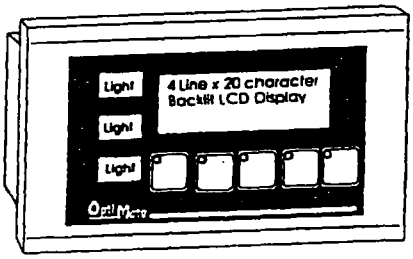

- **4 Line Message Display:** Has a 4 line by 20 character LCD display.
- **Three LED Annunciator Lamps:** Three LEDs illuminate user-defined labels. Within the internal memory are two control bits for each light. One bit controls the on/off status and the other bit controls whether or not the light flashes.

See page 7–30 for examples of how pushbutton functions keys and annunciator lamps are used in an OP–1510 panel. The procedures for this panel are similar.

SINGLE BURNER
SOLID STATE

BOM# 11246.1

FORM 7256

Protectofier

COMBUSTION SAFEGUARD

Operates with FLAME ROD and/or P-C II (Ultra-Violet) SCANNER

- Compact Design.
- Time Proven Plug-In Solid State FLAME-PAK Amplifier.
- Plug-In, Interchangeable Relays.
- Plug-In Power Transformer.
- Flame Rod and/or Ultra-Violet Sensing. Independent or simultaneously using same FLAME-PAK Amplifier.

Dimensions
[illegible]
[illegible] high
5" deep

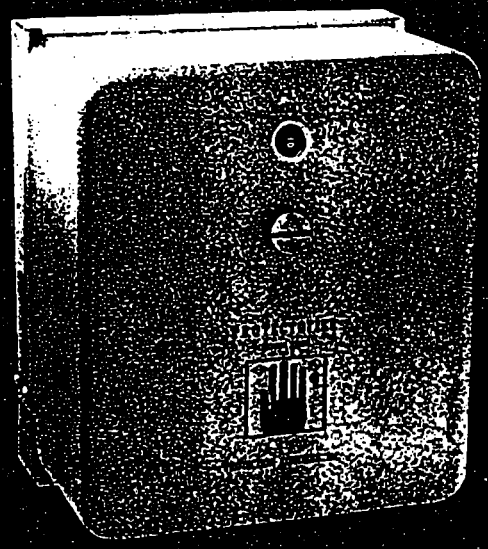

FORM 7256 TOP

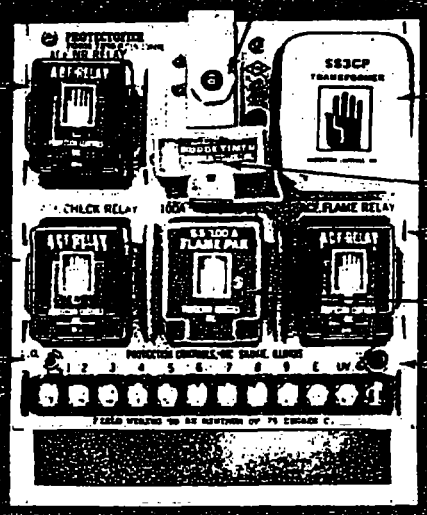

SPECIFICATIONS

Ambient temperature range [illegible] to [illegible] F

Flame response [illegible] to [illegible] seconds

Voltage/Frequency:
[illegible] VAC [illegible] 50 Hz

Voltage on [illegible] terminal to ground
[illegible] VAC

Voltage on [illegible] terminal to ground
[illegible] VAC

Power consumption [illegible] Va

Rating [illegible] (pilot duty)

COMPONENTS

CHECK RELAY (ACR): The [illegible] relay makes certain that the [illegible] is functioning properly. It is energized by the presence of the Flame Power Signal at the check relay to [illegible] safeguard circuit [illegible] and [illegible] of the fuel valve.

FLAME-PAK (SS100A): The [illegible] amplifier provides immediate response to the flame maintenance electronic sensing [illegible] when a flame [illegible] signal to the FLAME-PAK [illegible] the P-C II Flame Scanner which a DC signal is developed by an ultra-violet sensing tube. In either system the signal from the flame to the FLAME-PAK is interrupted, the fuel valves are de-energized and an alarm circuit can be energized if required.

FLAME RELAY (ACF): The [illegible] relay responds to FLAME-PAK output, energizing the circuit to the fuel valves.

TEST JACK: Provides convenient checking of flame signal by placing a DC microammeter in series with the flame rod or P-C II Ultra-Violet Scanner.

FLAME ROD OR ULTRA-VIOLET SCANNER (P-C II): Either or both can operate in the same PROTECTOFIER system. The P-C II Ultra-Violet Scanner can be used with gas or oil flame. It is compact, containing only an ultra-violet sensing tube to direct 2-wire connection to the PROTECTOFIER.

TRANSFORMER (SS3CP): Provides low voltage to FLAME-PAK circuit and power source for "F" and "UV" terminals.

FLAME RESPONSE LIGHT: Visual indicator [illegible] energized with flame present.

PROTECTION CONTROLS, INC.

PROTECTOFIER

AUTOMATIC OPERATION

SS100 A FLAME-PAK

ACF { C-CHECK RELAY
F-FLAME RELAY
NR-NON RECYCLE RELAY

SINGLE BURNER PROTECTOFIER
(FORM 7256 BT-✱NRH)

✱ — TIMING RANGE
(SEE TIMING SCHEDULE)

✱✱ - SAFETY INTLK. SERIES CIRCUIT. FUEL AND AIR PRESS., SWS., VENT, FANS. ETC. AS REQ'D.

——— INTERNAL WIRING.

- - - - EXTERNAL WIRING.

✱✱✱ - IMPORTANT
DO NOT CONNECT ANY LOAD CIRCUITS. TO TERM. 6 OR TERM. 7.

WIRING DIAGRAM

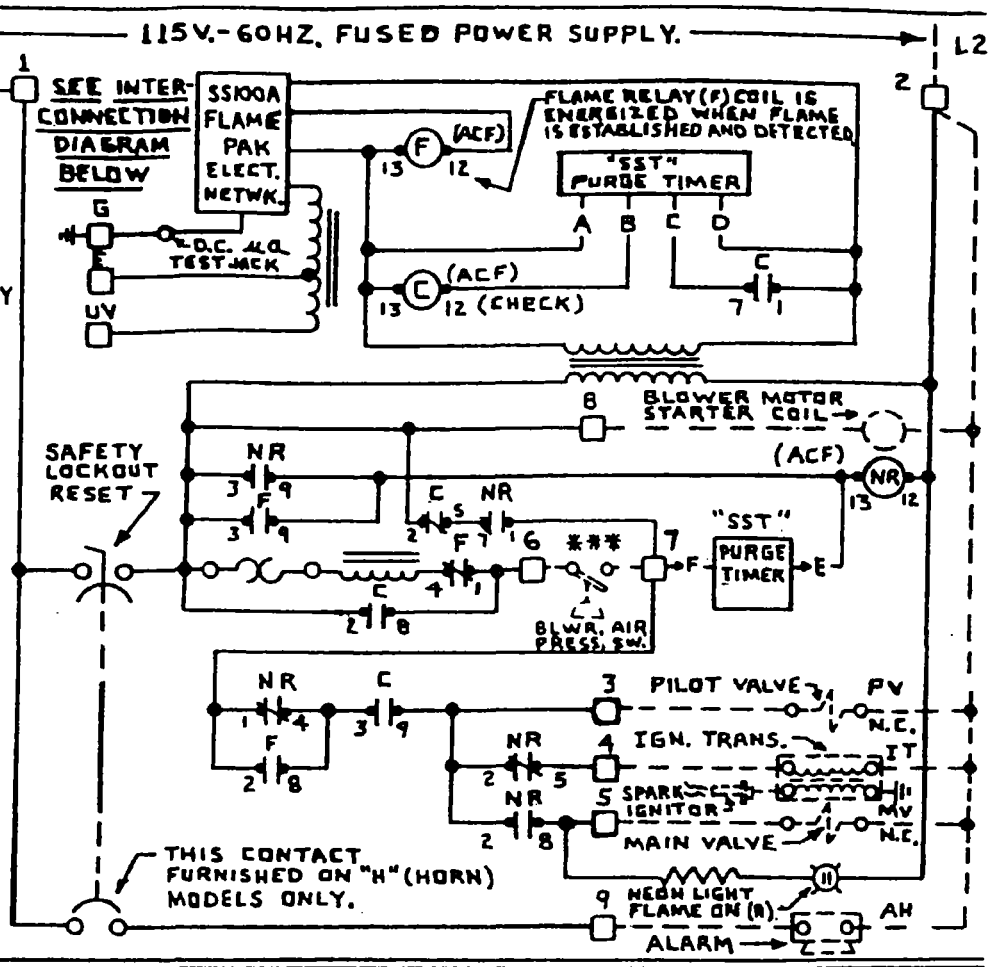

NOTES:
FLAME WIRE TO BE NO. 14 TYPE TW, 600V. INSULATED WIRE OR EQUAL. FLAME WIRE MUST NOT BE IN SAME CONDUITS WITH POWER WIRING.

IGNITION CABLE MUST BE RUN IN SEPARATE CONDUIT TO SPARK ELECTRODE. (DO NOT MIX WITH 115V. WIRING).

INSTALLATION, OPERATION AND MAINTENANCE SHALL CONFORM WITH NATIONAL FIRE PROTECTION ASSOCIATION STANDARDS, NATIONAL AND LOCAL CODES AND AUTHORITIES HAVING JURISDICTION. ANY MODIFCATION VOIDS APPROVAL.

SINGLE BURNER PROTECTOFIER
(FORM 7256 BT-✱NRH)

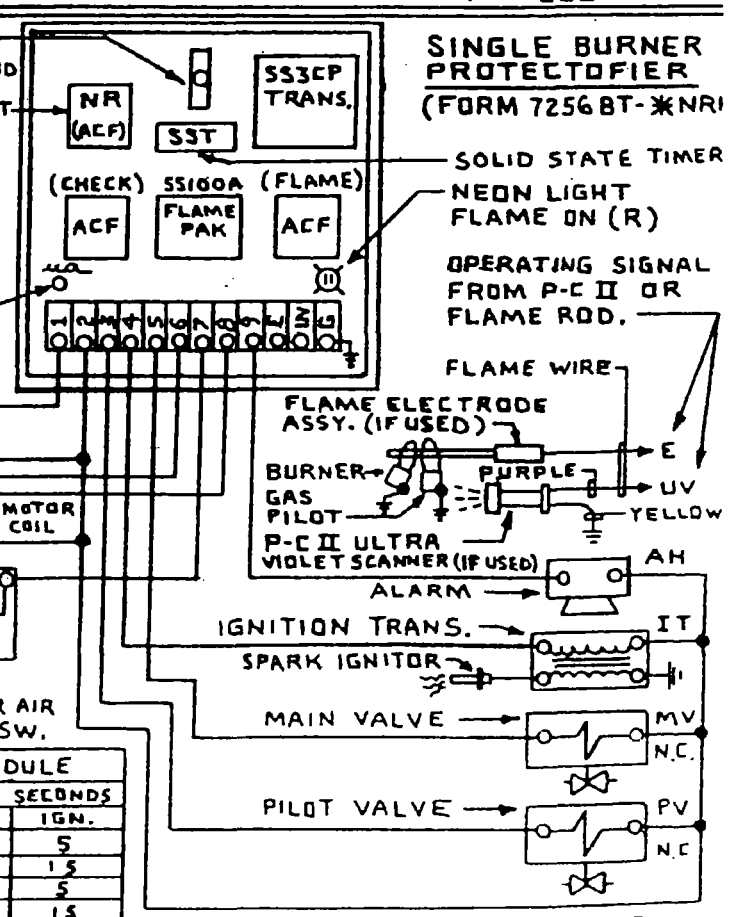

NOTES:
OPEN TYPE CONTROL SHOWN.
LETTER SUFFIX "E" AFTER FORM NUMBER INDICATES ENCLOSED MODEL.
LETTER SUFFIX "H" AFTER FORM NUMBER INDICATES PROTECTOFIER PROVIDED WITH CONTACT FOR FLAME FAILURE ALARM (SHOWN).
STANDARD TRIAL FOR IGNITION PERIOD IS 15 SEC. SUFFIX "5" FOLLOWING LETTER "B" INDICATES 5 SEC. TRIAL FOR IGNITION PERIOD.

TIMING SCHEDULE

✱ RANGE	TIME IN SECONDS PURGE	IGN.
15 — 5	15	5
15 — 15	15	15
30 — 5	30	5
30 — 15	30	15
60 — 5	60	5
60 — 15	60	15
90 — 5	90	5

INTERCONNECTION DIAGRAM

PROTECTION CONTROLS, INC.
SKOKIE, ILLINOIS

WIRING DIAGRAM FOR:
PROTECTOFIER FORM 7256 BT-✱NRH

JOB NO.	DRAWN BY	DATE	DRWNG NO.
TR	[illegible]	3-17-88	X-343

BOM# 4304.1/4345.1

Honeywell

UDC 3300
Universal Digital Controller

Specification

Overview

New Power and Flexibility
The UDC 3300 Universal Digital Controller packs new powerful features in the popular 1/4 DIN size while retaining all the simplicity, flexibility, accuracy, and industry-leading MMI of the UDC 3000.

Unmatched new application power includes: two universal analog inputs, two loops of control, two Math equations, two characterizers, and a totalizer. When these are combined with the new Accutune II™ tuning with fuzzy logic overshoot suppression, the result is price/performance leadership.

Application flexibility is assured by the universal analog inputs, universal AC power supply, two digital inputs, RS422/485 ASCII or Modbus RTU communication protocols, simple configuration plus total field upgrade capability for any optional feature.

The bright, dual displays with multi-language prompts (in English, French, German, Spanish, or Italian) make the operator interface easy to read, understand, and operate. Simple keystrokes let you set operating parameters that meet your process control needs.The optional RS422/485 ASCII communications allows the UDC 3300 to be configured and monitored using Honeywell's Windows™-based LeaderLine PC Software (LPCS) personal computer program.

The UDC 3300 is totally compatible with existing UDC 3000 applications and installations. It even uses the same case.

™Windows is a trademark of Microsoft

™MODBUS is a trademark of AEG Modicon

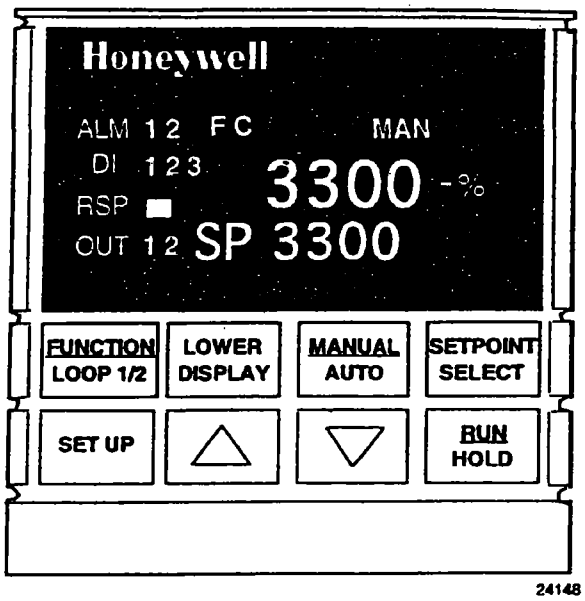

Figure 1—UDC3300 Controller has a sealed faceplate suitable for hosedown applications

Features/Options

High Accuracy—Typically ±0.20% of full scale input with a typical resolution of 15 bits. Can be field calibrated to ±0.05%.

Universal Inputs—Up to two isolated universal inputs accept all thermocouple, RTD, mA, mV, and voltage types. All input types are configurable without switches—no need to calibrate. Alternatively, the second input can be converted into two separate 1-5 volt/4-20 mA high level inputs to provide a total of three analog inputs. All inputs are sampled six times per second (every 166 ms). Inputs can be combined for use with Relative Humidity, % Oxygen, Carbon Potential, Dewpoint sensors, or optional Math Equation. (See Table 1.)

Features/Options, continued

Two Loops of Control (Optional)—Two independent loops or internally cascaded loops in one device.

Math Functions (Optional)

- **Algorithms**—Two pre-configured algorithms for easy implementation into either control loop. They can be linked or used individually and include the capability of using a Ratio and Bias with any input. You can select two from the following menu:

  Feedforward Summer—Uses any input, following a Ratio/Bias calculation, summed directly with the computed PID output value to provide a resultant output to the final control element (standard feature).

  Summer/Subtractor—Will add or subtract inputs with the result used as the derived PV.

Honeywell

BOM# 4304.1/4345.1

UDC 3300 Universal Digital Controller

Model Selection Guide

Instructions

- Select the desired Key Number. The arrow to the right marks the selection available.
- Make one selection each from Tables I, II, III and V using the column below the proper arrow. A dot (•) denotes unrestricted availability. A letter denotes restricted availability. Select as many Table IV options as desired. (If no options are desired, specify 00.)

Key Number		I		II		III		IV		V		VI
_ _ _ _ _ _	-	_ _	-	_ _ _	-	_ _	-	_ _ _ _ _ _ _	-	_ _	-	0

KEY NUMBER

Description		Selection Availability			
Basic Controller Model	DC330B	↓			
Expanded Controller Model	DC330E		↓		
Limit Controller Model	DC330L			↓	
Basic Model with UDC 3000 DMCS Functionality	DC330D				↓

TABLE I

Output #1	Current without Alarms or Output 2	C0	•			•
	Current with Alarm 1	K _	•	•		•
	Relay, E-M with Alarm 1	E _	•	•	•	•
	Relay, SS 1 amp with Alarm 1	A _	•	•		•
	Relay, SS 10 amp with Alarm 1	S _	•	•		•
	Open Collector Ouput	T _	•	•		•
Output #2 or Alarm #2	None	_ 0	•	•	•	•
	Relay, E-M	_ E	•	•	•	•
	Relay, SS 1 amp	_ A	•	•		•
	Relay, SS 10 amp	_ S	•	•		•
	Open Collector Ouput	_ T	•	•		•

TABLE II

External Interface	None	0 _ _	•	•	•	•
	RS-422/485 ASCII/MODBUS RTU	1 _ _	•	•	c	
	Auxiliary Output (Current Output #2)	2 _ _	•	•		
	DMCS Communications	4 _ _			c	•
Software Options	Standard Functions (includes Accutune II)	_ 0 _	•	•	c	•
	SPP	_ A _				•
	SPP	_ B _	•			
	Math Option + SPP	_ C _		•		
	2 Loops/Internal Cascade + SPP	_ D _		•		
	Math Option + 2 Loops/Internal Cascade + SPP	_ E _		•		
Digital Inputs	None	_ _ 0	•	•	•	•
	Two Digital Inputs	_ _ 3	•	•	•	•

DC330 _

Availability

TABLE III

		Selection	B	E	L	D
PV Input	T/C, RTD, Radiamatic, mV, 0-5V, 1-5V	1 _	•	•	•	•
	T/C, RTD, Radiamatic, mV, 0-5V, 1-5V, 0-20mA, 4-20mA	2 _	•	•	•	•
	T/C, RTD, Radiamatic, mV, 0-5V, 1-5V, 0-20mA, 4-20mA, 0-10V	3 _	•	•	•	•
	Relative Humidity (includes optional input)	15		•		
	Carbon, Oxygen or DewPoint (includes optional inpu	16	•	•		
Optional Input	None	_ 0	•	•	•	•
	Radiamatic, mV, 0-5V, 1-5V, 0-20mA, 4-20mA	_ 1	•	•		g
	Slidewire Input	_ 2	e	e		e
	T/C, RTD, Radiamatic, mV, 0-5V, 1-5V, 0-20mA, 4-20mA, 0-10V	_ 3	•	•		

TABLE IV

Options	90-264 Vac Power	0 _ _ _ _ _	•	•	•	•
	24 Vac/dc Power	1 _ _ _ _ _	•	•	•	•
	None	_ 0 _ _ _ _	•	•	•	•
	CSA, FM & UL (Approval Pending)	_ A _ _ _ _				
	FM & UL	_ F _ _ _ _	•	•	f	•
	Gray Elastomer Bezel	_ _ 0 _ _ _	•	•	•	•
	Blue Elastomer Bezel	_ _ B _ _ _	•	•	•	•
	Tan Elastomer Bezel	_ _ T _ _ _	•	•	•	•
	None	_ _ _ 0 _ _	•	•	•	•
	Customer ID Tag	_ _ _ T _ _	•	•	•	•
	None	_ _ _ _ 0 _	•	•	•	•
	DIN Cutout Adapter	_ _ _ _ D _	•	•	•	•
	None	_ _ _ _ _ 0	•	•	•	•

TABLE V

Manuals	English	0 _	•	•	•	•
	French	F _				
	German	G _				
	Italian	T _				
	Spanish	S _				
Certificate	None	_ 0	•	•	•	•
	Certificate of Conformance (F3391)	_ C	•	•	•	•

TABLE VI

No Selection	0	•	•	•	•

RESTRICTIONS

Restriction Letter	Table	Available Only With Selection	Table	Not Available With Selection
c	FM approved Limit Controllers with Communications are limited to Read Only. MODBUS and Accutune are not available on Limit Controller Models.			
e			I	_ 0
f	FM approved Limit Controllers are restricted to TC and RTD PV inputs. Limit Controllers are UL Recognized for Regulatory use only.			
g	The Optional Input on DMCS instruments is restricted to 1-5V or 4-20 mA Input Types.			

BOM# U527-1

Rockwell Automation

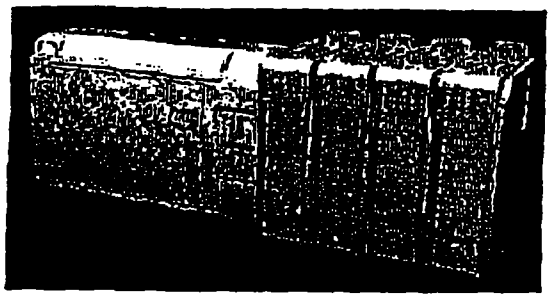

New Product Announcement

MicroLogix™ 1500 and Compact™ I/O

New Packaged Controller and I/O Platform Offer Flexibility and High Performance

MicroLogix 1500 Programmable Controller

The MicroLogix 1500 is a completely new packaged controller with world class features and performance. Many of these new features allow this packaged controller to be used in applications where much larger controllers were required in the past.

- High performance I/O expansion through Compact I/O
- Greater than 7K user memory (configurable)
- 32-bit signed integer math
- Embedded I/O provide enhanced high speed inputs and outputs
- Optional Data Access Tool (removable & insertable under power, RIUP)
- Trim Potentiometers
- Memory Modules and Real Time Clock

Compact I/O Modular Input/Output System

Compact I/O is a new 'PLC style' I/O platform offering industry leading price and performance. It utilizes the latest design technology for superior performance, excellent functionality and ease of use including:

- Innovative rackless design, which reduces system cost and inventory
- Modular, high density I/O termination to reduce panel space requirements
- Integrated high performance serial I/O bus
- Feature rich I/O functionality to address a wide range of applications
- Front removal/insertion, which reduces time for initial system assembly and product replacement
- Broad application coverage through 24V dc sink/source & 120/240V ac I/O; relay, and analog I/O.

New High Performance System Features

- Approximate scan time for a typical 1K user program (includes timers, counters, etc.): 1 millisecond
- Simple bit instruction execution : 0.7 microseconds
- 2 millisecond selectable timed interrupt
- 1 millisecond timers
- Two 20k Hz high speed counters each with eight modes of operation (up, down, up/down, quadrature, etc.)
- Two 20k Hz high speed outputs (PTO & PWM with accel/decel profiles)
- High speed 16Mbps serial I/O bus with CRC protected data integrity
- Rugged tongue and groove package design, to provide strength and system reliability
- Up to eight expansion Compact I/O modules per MicroLogix 1500 PLC.

Industry Standard Compatibility

The MicroLogix 1500 and Compact I/O products incorporate world class technology and features while maintaining compatibility with MicroLogix and SLC architectures.

- Standard RSLogix 500 programming environment with SLC and MicroLogix 1000 instruction set
- Removable, NEMA style "finger safe" terminal blocks on controller and I/O, to satisfy worldwide market requirements
- DIN rail or panel mount controller and I/O capability without additional hardware
- DH485 Networking using the 1761-NET-AIC
- DeviceNet compatibility using the 1761-NET-DNI
- DF1 Full Duplex, Half Duplex slave for SCADA based applications
- Ethernet and ControlNet connectivity through a wide range of bridge products
- Designed and tested to meet UL, CUL, and CE compliance

OCTOBER 1998

r Sales office for Product Availability

Post-it® Fax Note 7671	Date 11-25-98	# of pages ▶ 1
To BOB GREENER	From JIM KROEHN	
Co./Dept. CATALYTIC	Co. NORTHLAND	
Phone #	Phone #	
Fax #	Fax #	

Base Unit

BOM# _____

1764-24AWA Wiring Diagram[1]

Input Terminals

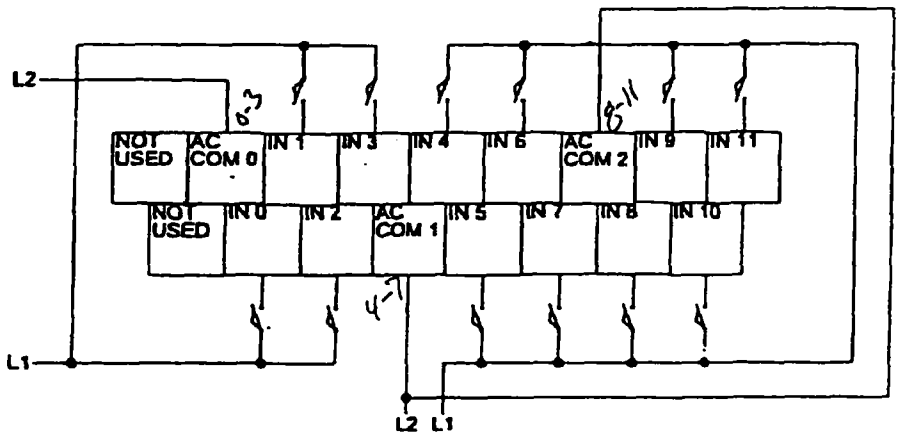

Output Terminals

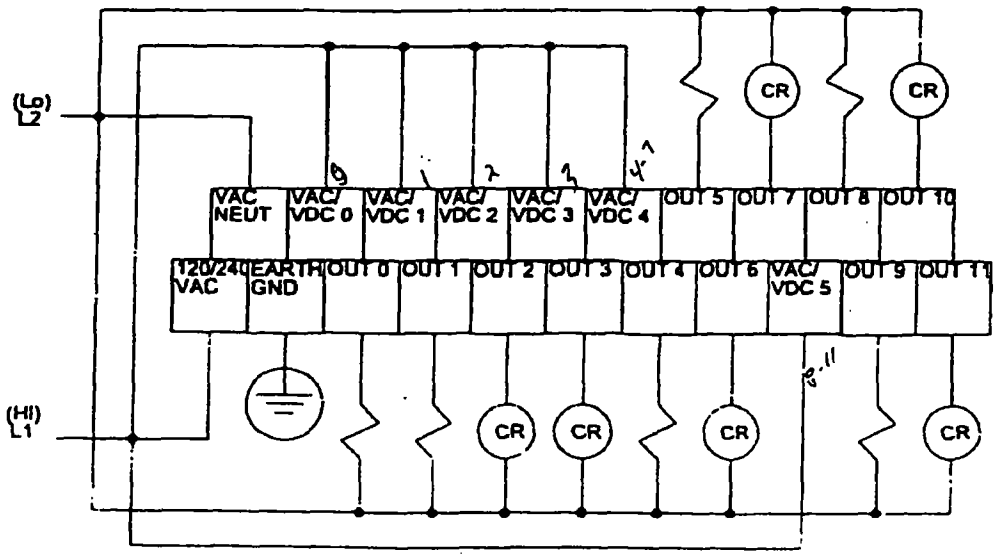

"NOT USED" terminals are not intended for use as connection points.

Post-It® Fax Note 7671	Date 5/19/99	# of pages ▸ 2
To Bob Greener	From Jim Kaucher	
Co./Dept. Catalytic	Co. Northland	
Phone #	Phone #	
Fax #	Fax #	

BOM# 4527.1

Post-it® Fax Note 7671 | Date 5-24-99 | # of pages ▶ 1
To Bob Greener | From Jim Kerkum
Co./Dept. Catalytic | Co. Northland
Phone # | Phone #
Fax # | Fax #

Input Wiring

Basic wiring[1] of input devices to the 1769-IA16 is shown below.

ATTENTION: Be careful when stripping wires. Wire fragments that fall into a module could cause damage at power up. Once wiring is complete, ensure the module is free of all metal fragments.

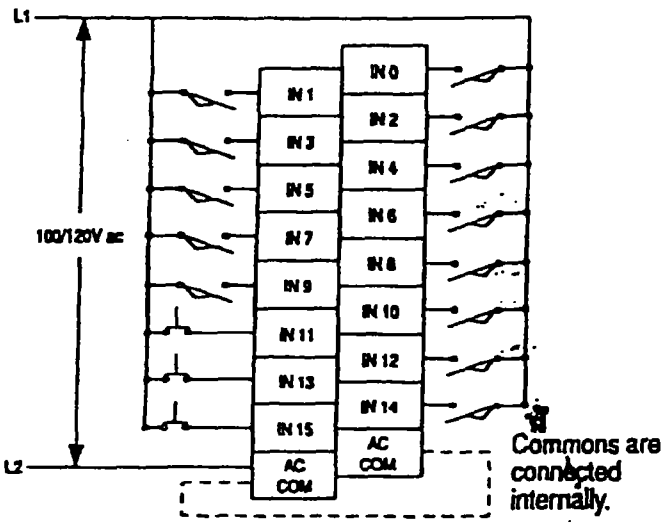

A removable, write-on label is provided with the module. Remove the label from the door, mark the identification of each terminal with permanent ink, and slide the label back into the door. Your markings (ID tag) will be visible when the module door is closed.

1. A current limiting resistor can be used to limit inrush current; however, the operating characteristics of the ac input circuit will be affected. If a 6.8K Ω resistor is placed in series with the input, the inrush current is reduced to 35 mA. In this configuration the minimum on-state voltage increases to 92V ac.
Before adding the resistor in a hazardous environment, be sure to consider the operating temperature of the resistor and the temperature limits of the environment. The operating temperature of the resistor must remain below the temperature limit of the environment.

BOM# 4527.1

Field Wiring Connections

Grounding the Module

This product is intended to be mounted to a well-grounded mounting surface such as a metal panel. Additional grounding connections from the module's mounting tabs or DIN rail (if used), are not required unless the mounting surface cannot be grounded. Refer to *Industrial Automation Wiring and Grounding Guidelines*, Allen-Bradley publication 1770-4.1, for additional information.

Output Wiring

Basic wiring[1] of output devices to the 1769-OW8 is shown below.

ATTENTION: Be careful when stripping wires. Wire fragments that fall into a module could cause damage at power up. Once wiring is complete, ensure the module is free of all metal fragments.

1769-OW8

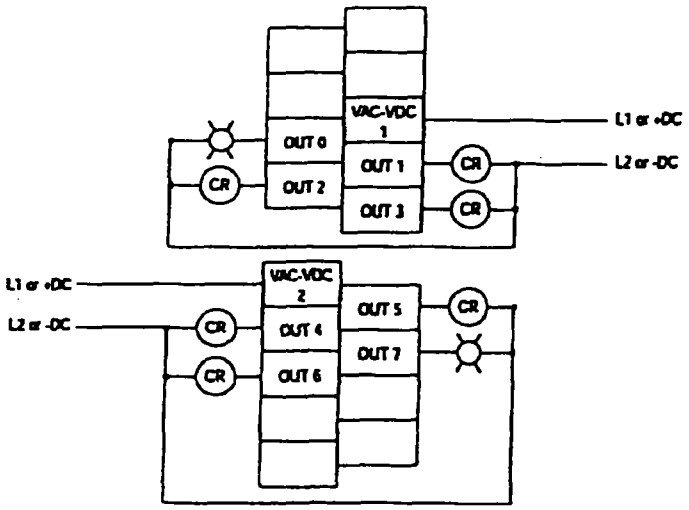

A removable, write-on label is provided with the module. Remove the label from the door, mark the identification of each terminal with permanent ink, and slide the label back into the door. Your markings (ID tag) will be visible when the module door is closed.

1. **Surge Suppression** - Connecting surge suppressors across your external inductive load will extend the life of the relay contacts. For additional details, refer to Industrial Automation Wiring and Grounding Guidelines, Allen-Bradley publication 1770-4.1.

Specifications

Design	
Digital Indication Accuracy	1 digit
Minimum Input Span	Range is fully configurable with span limitation of the operating range selected.
Input Impedance	*4-20 mAdc:* 250 ohms *0-10 Vdc:* 200K ohms *All others:* 10 Megohms
Source Impedance	*RTD:* 100 ohms per lead maximum
Span Step Response Time	6-seconds maximum with no filtering
Sampling Rate	Each input sampled 3 times a second.
Input Filter	*Software:* Single pole low pass section with selectable time constants (off to 120 seconds).
Digital Displays	Vacuum fluorescent, alphanumeric. A six digit display dedicated to the process variable. Alternate information displayed during configuration mode. An eight digit display shows key selected operating parameters. Also provides guidance during configuration.
Indicators	Channel PV display (CHN 1 or 2) Alarm status (ALM 1, 2) Controller Output (OUT 1, 2) Remote Set Point (RSP) for Control 1 Temperature unit (F or C) or Engineering units Controller's mode (A or MAN)
Deviation Bargraph	21 segment, color coded deviation bargraph: Green (large) = On Control Green (Small) = Deviation to ± 10% of PV
Controller Modes of Operation	Manual Operation Automatic with local set point Automatic with remote set point
Transmitter Supply Voltage	22 to 26 Vdc at input terminals (50 mAdc at 24 Vdc)

Specifications, continued

Performance					
Number of Inputs	*One Pen model:* One input *Two Pen model:* Two inputs				
	Range		Reference Accuracy		Temp. Stability ±
Types of Input Actuation[1]	_F	_C	± _F	± _C	Degrees Error Per 1 Degree ÆT
Thermocouples[2] B	105 to 3300 105 to 150 150 to 500 500 to 1000 1000 to 3300	41 to 1816 41 to 66 66 to 260 260 to 538 538 to 1816	 42.00 14.00 3.00 1.50	 23.00 7.70 1.70 0.80	 2.00 2.00 0.50 0.20
E	-454 to 1832 -454 to -202 -202 to 1832	-270 to 1000 -270 to -130 -130 to 1000	 18.00 1.00	 10.00 0.55	 0.70 0.35
E (low)	-200 to 1100	-129 to 593	0.50	0.30	0.20
J	0 to 1600	-18 to 871	0.40	0.22	0.06
J (low)	20 to 770	-7 to 410	0.20	0.11	0.04
K	-320 to 2500 -320 to 0 0 to 2500	-196 to 1371 -196 to -18 18 to 1371	 1.25 0.60	 0.70 0.35	 0.18 0.09
K (low)	-20 to 1000	-29 to 538	0.30	0.16	0.05
NNM (Ni Ni Moly)	32 to 2500 32 to 500 500 to 2500	0 to 1371 0 to 260 260 to 1371	 0.75 0.50	 0.40 0.30	 0.09 0.07
NIC (Nicrosil Nisil)	0 to 2372	-18 to 1300	1.0	0.55	0.01
R	0 to 3100 0 to 500 500 to 3100	-18 to 1704 -18 to 260 260 to 1704	 2.00 1.00	 1.10 0.55	 0.25 0.13
S	0 to 3100 0 to 500 500 to 3100	-18 to 1704 -18 to 260 260 to 1704	 2.00 1.00	 1.10 0.55	 0.23 0.13
T	-300 to 700	-184 to 371	0.60	0.35	0.07
T (low)	-200 to 600	-129 to 316	0.40	0.22	0.07
W5W26	0 to 4200 0 to 600 600 to 3600 3600 to 4200	-18 to 2315 -18 to 316 316 to 1982 1982 to 2315	 1.40 1.30 1.60	 0.77 0.70 0.90	 0.17 0.17 0.29
W5W26 (low)	0 to 2240 0 to 600 600 to 2240	-18 to 1227 -18 to 316 316 to 1227	 1.10 1.00	 0.60 0.55	 0.14 0.10
Radiamatic	1400 to 3400	760 to 1871	1.00	0.55	0.10

Specifications, continued

Types of Input Actuation[1]	Range		Reference Accuracy		Temp. Stability ± Degrees Error Per 1 Degree ÆT
	_F	_C	± _F	± _C	
RTDs					
Platinum					
100 ohms	–300 to 900	–184 to 482	0.40	0.22	0.05
500 ohms	–300 to 900	–184 to 482	0.20	0.11	0.05
Linear					
Milliamperes dc	4 to 20	–	0.10%	–	0.004% /_F
Millivolts dc	0 to 10	–	0.05%	–	0.004% /_F
	10 to 50	–	0.05%	–	0.004% /_F
Volts dc	1 to 5 (can be calibrated 0 to 5)	–	0.05%	–	0.004% /_F
	0 to 10	–	0.10%	–	0.004% /_F
Relative Humidity					
Platinum 100 ohm Wet/Dry Wet/Dry Bulb* %RH[3]	–130 to 392	–90 to 200	0.30	0.03	0.03
	Measured %RH	Dry Bulb Range °F	Dry Bulb Range °C	Reference Accuracy ± _F ± _C	Temp. Stability 53 to 104_F/ 12 to 40_C
	0 to <20	-103 to 212	-75 to 100	2% RH	0.11% RH/_F
	20 to 100	35 to 40	2 to 4	2% RH	0.11% RH/_F
		>40 to 100	>4 to 38	1% RH	0.06% RH/_F
		100 to 212	38 to 100	1% RH	0.03% RH/_F

[1]Not all Input Actuations are available on all models of the Classic Series Recorder. Consult Model Selection Guide 44-45-16-07 for information.

[2]*Includes reference junction calibration of ± 0.01degrees using standard "ice bath" method of calibration. Factory calibration at reference* ± 1.2_F. Note that factory calibration may vary by as much as ± 10 microvolts or ± 0.3 ohms for RTDs which means recalibration may be required to achieve stated accuracy.

[3]The RH calculation is inoperative when temperature goes below 32_F (0_C) or above 212_F (100_C). However, the dry bulb temperature will be monitored to -103_F (-75_C). Accuracy stated is for Classic Series Recorder only, and does not include remaining system accuracies.

*IEC Alpha (α) = 0.00385 Ω/Ω/_C

Specifications, continued

Configurable Parameters: These parameters can be set through the keypad.			
Group	**Parameters**	**Setting Range or Selection**	**Resolution**
TUNING 1(2)	Gain (or Prop Band) Rate Min (or RPM) Reset Min Man Rset Cyc Sec	0.1 to 1000 0.00 to 10.00 0.02 to 50.00 -100 to 100% output 1 to 120 sec.	0.1 0.01 0.01 1 1
SPRAMP 1(2)	SP Ramp (1 or 2) Time Min Final SP	Disable or Enable 0 to 255 0 to 100% of Span	
CHART	Chart speed Hours per revolution Linearize	8 hrs, 12 hrs, 24 hrs, 7 days, or selected hours per revolution 1 to 744 hrs Linear or Non-linear Chart	
PEN 1	Pen 1 Pen 1 input Chart 1 high range value Chart 1 low range value Pen 1 On Pen 1 Off	Disable or Enable Input 1, Output, SP, Dev, Dgtl1, Dgtl2, Input 2, Out2, SP2, Dev2 -999.0 to 9999 -999.0 to 9999 0 to 100% of chart 0 to 100% of chart	 0.1 0.1 1 1
PEN 2	Same as PEN 1		
INPUT 1	Decimal point location Units Actuation type Transmitter characterization High range value Low range value Low Flow Cutoff Input compensation Filter 1 Sensor break protection (burnout)	None, 1 (XXX.X), 2 (XX.XX), or 3 (X.XXX)— one decimal place only for non-linear inputs _F, _C, or engineering units See Input types All non-linear input types, linear, square root -999.0 to 9999 -999.0 to 9999 0 to 100% of input range -999.0 to 9999 0 to 120 None, Up or Down	 0.1 0.1 0.1 1
INPUT 2	SAME AS INPUT 1		
TOTAL 1	Total Reset total Total 1 Total engineering units Rate Scaling factor Resettable	Read only Yes or No Disable or Enable Desired alphanumeric title Second, Minute, Hour, Day or Million/Day 1, 10, 100, 1000, 10,000, 100,000 or 1E6 No, Local, Ext Sw1, Ext Sw2	
TOTAL 2	SAME AS TOTAL 1 - except for INPUT 2		

Specifications, continued

Controller			
Group	**Parameters**	**Setting Range or Selection**	**Resolution**
Control 1 (2)	PID tuning sets	1 or 2	
	Setpoint source	Local, Remote (Control 1 only), or 2 Local	
	Ratio (Input 2)	-20.00 to 20.00	0.01
	Bias	-999 to 9999	1
	SP tracking	None or RSP (Control 1 only)	
	Power-up mode recall	Manual, Auto LSP, or Auto RSP, AM, SP, AMLSP	
	High and low SP limits	0 to 100% of span in engineering units	
	Action	Direct or reverse	
	High and low output limits	-5 to 105% of output	1
	Dropoff value	-5 to 105% of output	1
	Deadband	-5.0 to 25% of PV Span	
	Output Hyst	0.0 to 5.0% of PV Span	
	Failsafe output value	Within the output limits	1
	Remote Switching	None, ToMan, ToLSP, To2SP, ToDir, RN/HLD	
	Man Key	Disable or Enable	
	PB or Gain	Proportional band (%) or gain	1
	Reset units	Repeats/minute or minutes/repeat	
	Control 1 Algorithm	PIDA, PIDB, PD + MR, ON-OFF	
	Output 1 Algorithm	Current, Position Prop, TimeD, Cur TI, TI Cur, Time	
Options	Input 1 (2)	Disable or Enable	
	Control 1 (2)	Disable or Enable	
	Reject Frequency	60 or 50 Hz	
	Aux Output	Disable, IN1, IN2, PV1, PV2, Dev1, Dev2, Out1 (2),SP1 (2)	
	4mA Val	Low scaling factor	
	20mA Val	High scaling factor	
	Relative Humidity	Yes or No	
	Atm. Pressure	590 to 800	
	Deviation	None, SetPnt, Chan 1	
	Scroll (Lower Display)	None, 1 sec, 2 sec, 3 sec	
ALARMS (soft, indication only)	SP Value	0.0 to 9999	
	SP Type	None, Input 1 (2), RH, Dev, Output, Total 1, Total 2	
	Alarm Type	Dev2, Out2	
	Alarm Scaling Multiplier for Totalizer Alarm	High or Low	
	Alarm Hysteresis	1, 10, 100, 1000, 10000, 100000, 1E6 0.0 to 100% of span	0.1
LOCKOUT	Lockout (Software and/or Hardware)	None, Calib, +Conf, Max Hardware Configuration Lockout (Optional)	
STATUS	Version	Latest Software Version	
	Failsafe	Yes or No	
	RAM Test	Pass or Fail	
	Configuration Test	Pass or Fail	
	Calibration Test	Pass or Fail	
	Fact CRC (Factory Set Input Constants)	Pass or Fail	
	Battery Test	Pass or Fail	

Specifications, continued

Controller (continued)	
Controller Output[1] (Optional)	• *On-Off or Time Proportional* One SPST electromechanical relay. Control action can be set for direct or reverse; N.O. or N.C. contact selectable. • *On-Off Duplex, 3 position Step, or Time Proportional Duplex* Two SPST electromechanical relays. Control action can be set for direct or reverse; N.O. or N.C. contact selectable. • *Current Proportional* 21 mAdc maximum into a negative or positive grounded or non-grounded load of 0 to 1000 ohms. Output range can be set between 4 and 20 mA, and as direct or reverse action. *Resolution:* 10 bits *Accuracy:* 0.5% full scale FM Approved Output (Optional) • *Position Proportional* Two SPST electromechanical relays operate motor having a 100 ohm to 1000 ohm slidewire. • *Current/Time Duplex and Time /Current Duplex* Variation of time proportional duplex for Heat/Cool applications. Time proportional output (heat or cool) is a SPST electromechanical relay. Current proportional output (heat or cool) is a 4-20 mA signal that can be fed into a negative or positive grounded load of 0 to 1000 ohms and is operational over 50 % of range or the entire range. Time Proportional Relay Resolution: 4.4 mSec. *Relay Contact Ratings:* Resistive Load: 5A @ 120 Vac, 2.5A @ 240 Vac Inductive Load: 50 VA @ 120 Vac or 240 Vac *Cycle Time:* 1 to 120 seconds Current Proportional: *Resolution:* 10 bits *Accuracy:* 0.5% full scale
CE Conformity (Europe) (Optional)	This product is in conformity with the protection requirements of the following European Council Directives: **73/23/EEC**, the Low Voltage Directive, and **89/336/EEC**, the EMC Directive. Conformity of this product with any other "CE Mark" Directive(s) shall not be assumed.
Product Classification:	Class I: Permanently Connected, Panel Mounted Industrial Control Equipment with protective earthing (grounding). (EN 61010-1)
Enclosure Rating:	Panel Mounted Equipment, IP 00, this recorder must be panel mounted. Terminals must be enclosed within the panel. Front panel IP 65 (IEC 529)
Installation Category (Over-voltage Category)	Category II: Energy-consuming equipment supplied from the fixed installation. Local level appliances, and Industrial Control Equipment. (EN 61010-1)
Pollution Degree:	Pollution Degree 2: Normally non-conductive pollution with occasional conductivity caused by condensation. (Ref. IEC 664-1)
EMC Classification	Group 1, Class A, ISM Equipment (EN 55011, emissions), Industrial Equipment (EN 50082-2, immunity)
Method of EMC Assessment	Technical File (TF)
Declaration of Conformity	51197635-000

Specifications, continued

Controller, continued	
Auxiliary Linear Output (Optional)	21mA dc maximum into a negative or positive grounded load or non-grounded load of 0 to 1000 ohms. Output range can be set between 0 to 21 mA, and as direct or reverse action. It can be configured to represent any one of ten parameters. The range of the auxiliary output, as a function of the selected variable, can be scaled. This output can be used as a second current output for current duplex outputs. *Resolution:* 12 bits over 0 to 21 mA *Accuracy:* 0.2% of full scale *Temperature Stability:* 0.03% F.S./ °C
Case	Molded, foamed-Noryl** with gasketed door to meet NEMA 3 enclosure requirements. Stainless Steel Heavy Duty door available as an option.
Pen	Disposable fiber-tip ink cartridge. Line length per cartridge more than 1000 ft (305m). *One Pen:* Purple *Two Pens:* Purple and Red
Chart	12-inch (304.8mm) diameter chart with standard preprinted markings and a calibrated width of 4.62-inches (117.5mm).
Wiring Connections	Terminals inside the case
Color	*Case:* Black *Door (standard):* Caribbean blue or Gray
Approval Bodies	U.L. approval depending on model. Consult Model Selection Guide for information. FM approved for Class I, Div 2, Groups A, B, C, D areas depending on model.
Dimensions	See Figure 3.
Weight	13.2 lbs (6 kg)
Mounting	Panel or surface mounted. Some adapter kits available for existing panel cutouts.
Options	
Alarm Output	Two SPST electromechanical relays *Relay Contact Ratings:* Resistive Load: 1A @ 120 Vac, 1/2A @ 240 Vac.
Digital Input	+20 Vdc source for external dry contact or isolated solid state contacts. Selects one configured input.
Totalizers	One or two totalizers depending on model. Eight digit "totals" with multiplier on digital display.
Miscellaneous	• FM Approved 4-20 mA Control Output • Heavy Duty, Stainless Steel door with acrylic window • Door Lock • Chart Illumination • U.L. Listing, FM Approval, CE Conformity • Control • Glass or Acrylic Window • Customer ID Tag • 4-20 mA Auxiliary Output

** Registered Trademark – General Electric Co.

1. Not all controller outputs are available on all models of the Classic Recorder. Consult Model Selection Guide 44-45-16-07 for information.

Specifications, continued

Environmental and Operating Conditions				
Parameter	**Reference**	**Rated**	**Extreme**	**Transport and storage**
Ambient Temperature	67 to 77_F 19 to 25_C	58 to 131_F 15 to 55_C	32 to 131_F 0 to 55_C	–40 to 151_F –40 to 66_C
Relative Humidity (%RH)	0 to 55*	10 to 90*	5 to 90*	5 to 95*
Vibration Frequency (Hz) Acceleration (g)	 0 0	 0 to 70 0.1	 0 to 200 0.2	 0 to 200 0.5
Mechanical Shock Acceleration (g) Duration (ms))	 0 0	 1 30	 5 30	 20 30
Mounting Position from Vertical Tilted Forward Tilted Backward Tiilted to Side (±)	 5_ 5_ 5_	 5_ 30_ 10_	 5_ 90_ 20_	 Any Any Any
Power Requirements Voltage (VRMS) Frequency (Hz)	 119 to 121 238 to 242 49.8 to 50.2 59.8 to 60.2	 102 to 132 204 to 264 49 to 51 59 to 61	 102 to 132 204 to 264 48 to 52 58 to 62	 N/A N/A N/A N/A
Power Consumption	20 watts maximum			
General Reference Data				
Stray Rejection	*Common Mode Rejection Ratio:* 120dB or 1 LSB (whichever is greater) at 60 Hz with maximum source impedance of 100 ohms. *Normal Mode Rejection Ratio:* 60dB with a 100% span peak-to-peak maximum at 60 Hz.			
Static Charge Effects	Exposed panel surfaces capable of withstanding a discharge from a 250pf capacitor charged to 10KV through 100 ohms.			
Line Noise Effects	Field terminals for connecting power line to recorder can withstand the IEEE Surge Withstanding Capability Test to a level of 2.5KV.			
Warranty and Technical Assistance	DR 4500A carries a 2-year warranty, and toll-free 800 number puts technical assistance only a phone call away.			

* The maximum rating only applies up to 104_F (40_C). For higher temperatures, the RH specification is derated to maintain constant moisture content.

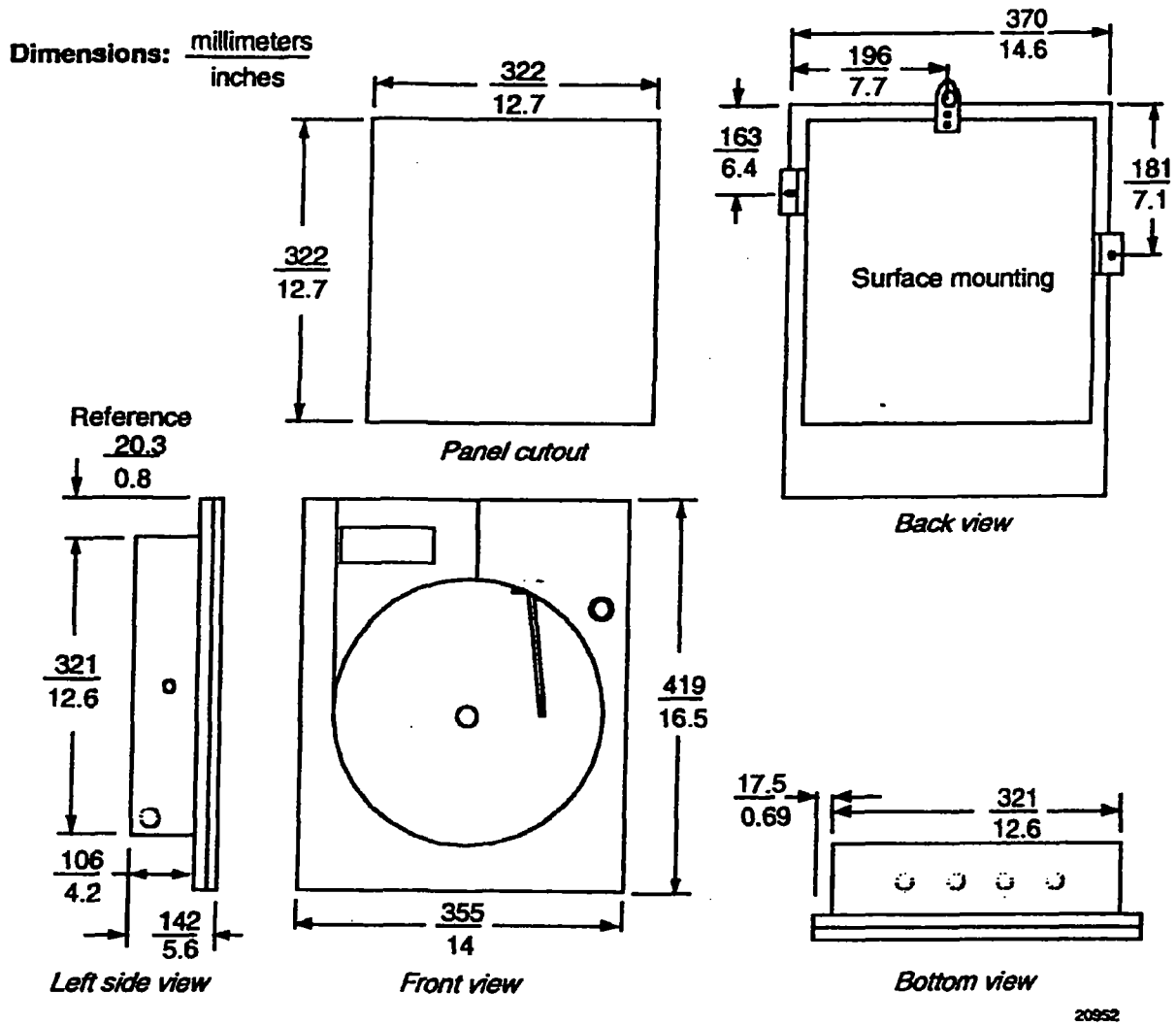

Figure 3—DR 4500A series recorder dimensions - for reference only

Ordering Information

For complete ordering information, request Model Selection Guide 44-45-16-07 for DR 4500A Series Circular Chart Recorder.
Honeywell offers a full line of sensors and transmitters that produce a compatible range of dc voltage or current signals which can be used as inputs to the DR 4500A Series Recorder.
These devices measure:

Temperature: (Thermocouple or RTD)
Pressure
Flow {4 to 20 mA dc or 1 to 5 Vdc process transmitter
Liquid Level
Relative Humidity

Specifications are subject to change without notice.

For more information, contact your nearest Honeywell Branch Office or

Honeywell Inc.
1100 Virginia Dr.
Fort Washington, PA 19034

In Canada:
Honeywell Limited
155 Gordon Baker Rd.
Willowdale, Ontario M2H 3N7

Control System Design Package

CCC Project Number

99216_1

Main Power Source (supplied by others)

460VAC/3PH/60Hz

General System Information

CCC Contact person:	Mike Ebner
Project Consultant:	LBG
Primary Contact:	Kristen Yahnke
Primary Phone #:	612-490-1405
Site Location:	Dayton, Ohio
System Type:	Oxidizer (w/ Scrubber)
Classifications:	-
Agency Approval:	-
Control Voltage:	120VAC/1PH/60Hz
Main Supply Power:	460VAC/3PH/60Hz
Panel Location:	In Onboard Cabinet

Customer Approval: _____ Date: _____

INFORMATION HEREIN IS THE PROPERTY OF CATALYTIC COMBUSTION CORP. ANY COPYING, TRANSMITTAL TO OTHERS, OR USE EXCEPT THAT FOR WHICH IT IS LOANED IS PROHIBITED.

Bill of Materials

Dev. Code	Description	QTY	Part Number	MFG
403.1	Deadfront GFCI, 120VAC, 20A, Switch/Motor Rated	1.00	2081-W	TDM
C146.1	Auxillary Contact For LCI Series Contactor	1.00	LA8DN11	SQD
	Contactor, IEC, 3P, 600V, 120V Coil, 1 N.O Contact	1.00	LC1D0910G6	Square D
C160.1	Contactor, IEC, 3P, 600V, 120V Coil, 1 N.O Contact	1.00	LC1D0910G6	SQD
C249.1	Relay, DPDT	1.00	RH2B-UL-AC120V	IDEC
	Relay Socket, DPDT	1.00	SH2B-06	IDEC
C273.1	Relay, DPDT	1.00	RH2B-UL-AC120V	IDEC
	Relay Socket, DPDT	1.00	SH2B-06	IDEC
C620.1	Relay, DPDT	1.00	RH2B-UL-AC120V	IDE
	Relay Socket, DPDT	1.00	SH2B-06	IDE
C621.1	Relay, DPDT	1.00	RH2B-UL-AC120V	IDEC
	Relay Socket, DPDT	1.00	SH2B-06	IDEC
C623.1	Relay, 4PDT	1.00	R42B-UL-AC120V	IDE
	Relay Socket, 4PDT	1.00	SH4B-06	IDE
C624.1	Relay, DPDT	1.00	RH2B-UL-AC120V	IDEC
	Relay Socket, DPDT	1.00	SH2B-06	IDEC
C626.1	Relay, DPDT, Bifurcated Contacts	1.00	RY22S-U-AC120V	IDE
	Relay Socket, DPDT, RY Style	1.00	SY2S-05	IDE
C627.1	Relay, DPDT	1.00	RH2B-UL-AC120V	IDE
	Relay Socket, DPDT	1.00	SH2B-06	IDE
C629.1	Relay, 4PDT	1.00	R42B-UL-AC120V	IDEC
	Relay Socket, 4PDT	1.00	SH4B-06	IDEC
C630.1	Relay, DPDT	1.00	RH2B-UL-AC120V	IDE
	Relay Socket, DPDT	1.00	SH2B-06	IDE
CB137	Circuit Breaker; 1P; 480V; 6 Amp; Equipment Protection	1.00	S272-K1	ABB
CH412.1	Circ. Chart Recorder	1.00	DR45AT- xxxx	Honeywell
DSC101.1	Disconnect, Non Fusable, 80 Amp, 600V, 3P, DIN	1	OT100E3	ABB
DSC108.2	Disconnect, Non Fusable, 30 Amp, 600V, 3P, DIN	1.00	OT32E3	ABB
F106.1	Fuse, Class J, Time Delay, 30 Amp, 600V, 300K AIR	3	LPJ-30SP	Bussman
F108.1	Fuse, Class J, Time Delay, 12 Amp, 600V, 300K AIR	3	LPJ-12SP	Bussman
F115.1	Fuse, Class CC, Time Delay, 5 Amp, 600V, 20K AIR	3	LP-CC-5	Bussman
F125.1	Fuse; Class FNQR; Rejection; 4 Amp; 600V; 200K AIR	1.00	FNQR-4	Bus
F127.1	Fuse; Class FNQR; Rejection; 4 Amp; 600V; 200K AIR	1.00	FNQR-4	Bus
F131.1	Fuse; Class FNQR; Rejection; 8 Amp; 600V; 200K Air	1.00	FNQR-8	Bus
FU433.1	Fuse, Class CC, Fast Acting,1/2 Amp, 600V, 200K AIR	1.00	KTKR-1	Bussman
FU454.1	Fuse, Class CC, Fast Acting,1/2 Amp, 600V, 200K AIR	1.00	KTKR-1/2	Bussman
	Touchsafe Fuseholder, Class CC, 1P, 600V, 1/10-30A, DIN	2	CHCC1	Bussman
H137	Panel Heater; 120V; 300W; 40 Degree Remote Tstat	1.00	040150C1EW11K	Watlow
I463.1	Operator Panel, Optimate, 4x20 Char, 5 F Keys, 3 Ind Lights	1.00	OP-640-M	KOY
L133.1	Transformer Light Module, 1 NC	1.00	ZB2-BW032	SQD
L153.1	Transformer Light Module, 2 NO	1.00	ZB2-BW033	SQD
L168.1	Transformer Light Module, 2 NO	1.00	ZB2-BW033	SQD
MECH175.1	Disconnect Selector Handle, Defeatable, Lock, NEMA 3R	1.00	OHB2AJ	ABB

CATALYTIC COMBUSTION
709 - 21st Avenue Bloomer, Wisconsin 54724
Telephone 715-568-2882 FAX 715-568-2884

CUSTOMER:
LBG

DESCRIPTION:
Oxidizer (w/ Scrubber

PROJECT NO: 99216_1

DRAWING NO: 99216300 1

REVISION HISTORY

REV	DATE	ACTION TAKEN	APPR.
0	12/28/98	Submittal	
A	10/15/99	As Built (ship date)	
B		Field Modified #1	
C		Field Modified #2	

INFORMATION HEREIN IS THE PROPERTY OF CATALYTIC COMBUSTION CORP. ANY COPYING, TRANSMITTAL TO OTHERS, OR USE EXCEPT THAT FOR WHICH IT IS LOANED IS PROHIBITED.

Bill of Materials

Dev. Code	Description	QTY	Part Number	MFG
MECH176.1	Touchsafe Fuseholder, Class CC, 3P, 600V, 1/10-30A, DIN	1.00	CHCC3	BUS
	Power Distribution Block, 3P, 2/0-#14, 195 Amp,	1.00	63133	GOU
	Touchsafe Fuseholder, Class J, 1P, 600V, 1-30A, DIN	6	JT60030	Bussman
	Touchsafe Fuseholder, Class CC, 1P, 600V, 1/10-30A, DIN	1.00	CHCC1	Bussman
MECH176.2	1" Wire Duct Cover	8	C1WH6	PAN
	1" Wire Duct	8	E1x3WH6	PAN
	DIN Rail, 35mm (1 meter sections)	3	9999NT13	SQD
	Enclosure Data Packet, 12"x12"	1.00	A-DP2	HOF
	Enclosure Mounting Feet, Steel	1.00	C-MFK	HOF
	Enclosure Padlock Handle	1.00	C-WHPTO	HOF
	3 Hub Ground Strip	1.00	PK3GTA1	SQD
	NEMA Hinge Kit.	1.00	A-NADFK	HOF
	Interface Cable, Optimate to 405 Top Port (15 Pin)	1.00	OP-4CBL	KOY
	Enclosure, Concept Series, 36"x36"x12", NEMA 4	1.00	C-SD363612	Hoffman
	Enclosure Mounting Panel	1.00	C-P3636	Hoffman
	Panel (used for inner door), 33"x33"	1.00	A-36P36	Hoffman
OL108.1	Overload Relay, IEC, 5.5-8 Amps, Class 20 , 1P Sens.	1.00	LR2D1512	Square D
OL115.1	Overload Relay, IEC, 2.5-4 Amps, Class 20 , 1P Sens.	1.00	LR2D1508	Square D
PS430.1	Power Supply, 24VDC, 320ma	1.00	8440PS24	SQD
PS453.1	Power Supply, 24VDC, 320ma	1.00	8440PS24	SQD
S148.1	Selector Switch, 3 Pos, Spring LT to CTR, Green	1.00	ZB2-BK173	SQD
S162.1	Selector Switch, 3 Pos, Spring LT to CTR, Green	1.00	ZB2-BK173	SQD
SW131.1	Pushbutton, Mushroom, Momentary, Red	1.00	ZB2-BW64	SQD
T129.1	Transformer; 1000VA; 240/480x120; Fuse Block Incl.	1.00	9070-TF1000D1	SQD
U246.1	Flame Safety Programmer,	1	7256	PC
U345.1	Temp Controller, 3300 series	1.00	DC330B-KE-203-23-0A0000-000	Honeywell
U527.1	AB MicroLogix 1500 Base Unit, 12 VAC IN, 12 Relay Out	1.00	1764-24AWA	Allen Bradley
	AB MicroLogix 1500 End Cap - I/O Termination	1.00	1764-ECR	Allen Bradley
	AB MicroLogix 1500 Processor Unit	1.00	1764-LSP	Allen Bradley
U570.1	AB MicroLogix 1500 16 Point In, 120VAC	1.00	1769-IA16	Allen Bradley

CATALYTIC COMBUSTION
700 - 21st Avenue, Bloomer, Wisconsin 54724
Telephone 715-568-2882 FAX 715-568-2884

CUSTOMER:
LBG

DESCRIPTION:
Oxidizer (w/ Scrubber

PROJECT NO: 99216_1

DRAWING NO: 99216300_1

REVISION HISTORY

REV	DATE	ACTION TAKEN	APPR.
0	12/28/98	Submittal	
A	10/15/99	As Built (ship date)	
B		Field Modified #1	
C		Field Modified #2	

INFORMATION HEREIN IS THE PROPERTY OF CATALYTIC COMBUSTION CORP. ANY COPYING, TRANSMITTAL TO OTHERS, OR USE EXCEPT THAT FOR WHICH IT IS LOANED IS PROHIBITED.

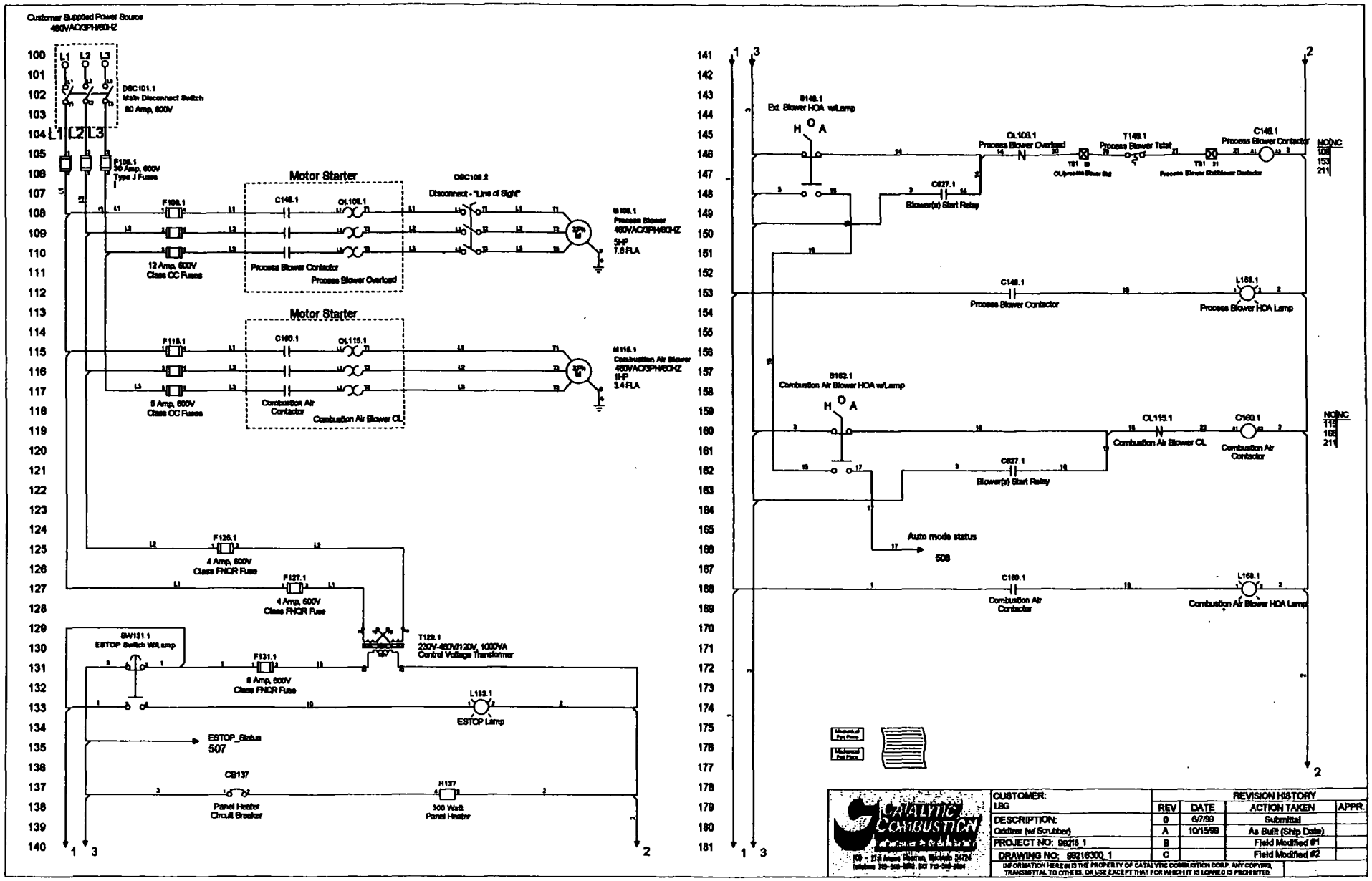
Customer Supplied Power Source
480V/AC/3PH/60HZ
L1 L2 L3
DSC101.1
Main Disconnect Switch
80 Amp, 600V
F108.1
30 Amp, 600V
Type J Fuse
Motor Starter
C148.1
OL109.1
DSC109.2
Disconnect - "Line of Sight"
F109.1
M109.1
Process Blower
480V/AC/3PH/60HZ
5HP
7.6 FLA
12 Amp, 600V
Class CC Fuses
Process Blower Contactor
Process Blower Overload
Motor Starter
C160.1
OL115.1
F116.1
M116.1
Combustion Air Blower
480V/AC/3PH/60HZ
1HP
3.4 FLA
5 Amp, 600V
Class CC Fuses
Combustion Air Contactor
Combustion Air Blower OL
F126.1
4 Amp, 600V
Class FNQR Fuse
F127.1
4 Amp, 600V
Class FNQR Fuse
T129.1
230V-480V/120V, 1000VA
Control Voltage Transformer
SW131.1
ESTOP Switch W/Lamp
F131.1
6 Amp, 600V
Class FNQR Fuse
L133.1
ESTOP Lamp
ESTOP_Status
507
CB137
Panel Heater
Circuit Breaker
H137
300 Watt
Panel Heater
S148.1
Ext. Blower HOA w/Lamp
H O A
OL109.1
Process Blower Overload
T148.1
Process Blower Total
C148.1
Process Blower Contactor
NO/NC
109
153
211
C827.1
Blower(s) Start Relay
C148.1
Process Blower Contactor
L153.1
Process Blower HOA Lamp
S162.1
Combustion Air Blower HOA w/Lamp
H O A
OL115.1
Combustion Air Blower OL
C160.1
Combustion Air Contactor
NO/NC
115
160
211
C827.1
Blower(s) Start Relay
Auto mode status
508
C160.1
Combustion Air Contactor
L160.1
Combustion Air Blower HOA Lamp
CATALYTIC COMBUSTION
CUSTOMER:
LBG
DESCRIPTION:
Oxidizer (w/ Scrubber)
PROJECT NO: 99216.1
DRAWING NO: 99216300_1
REVISION HISTORY
REV DATE ACTION TAKEN APPR.
0 6/7/99 Submittal
A 10/15/99 As Built (Ship Date)
B Field Modified #1
C Field Modified #2
INFORMATION HEREIN IS THE PROPERTY OF CATALYTIC COMBUSTION CORP. ANY COPYING, TRANSMITTAL TO OTHERS, OR USE EXCEPT THAT FOR WHICH IT IS LOANED IS PROHIBITED.

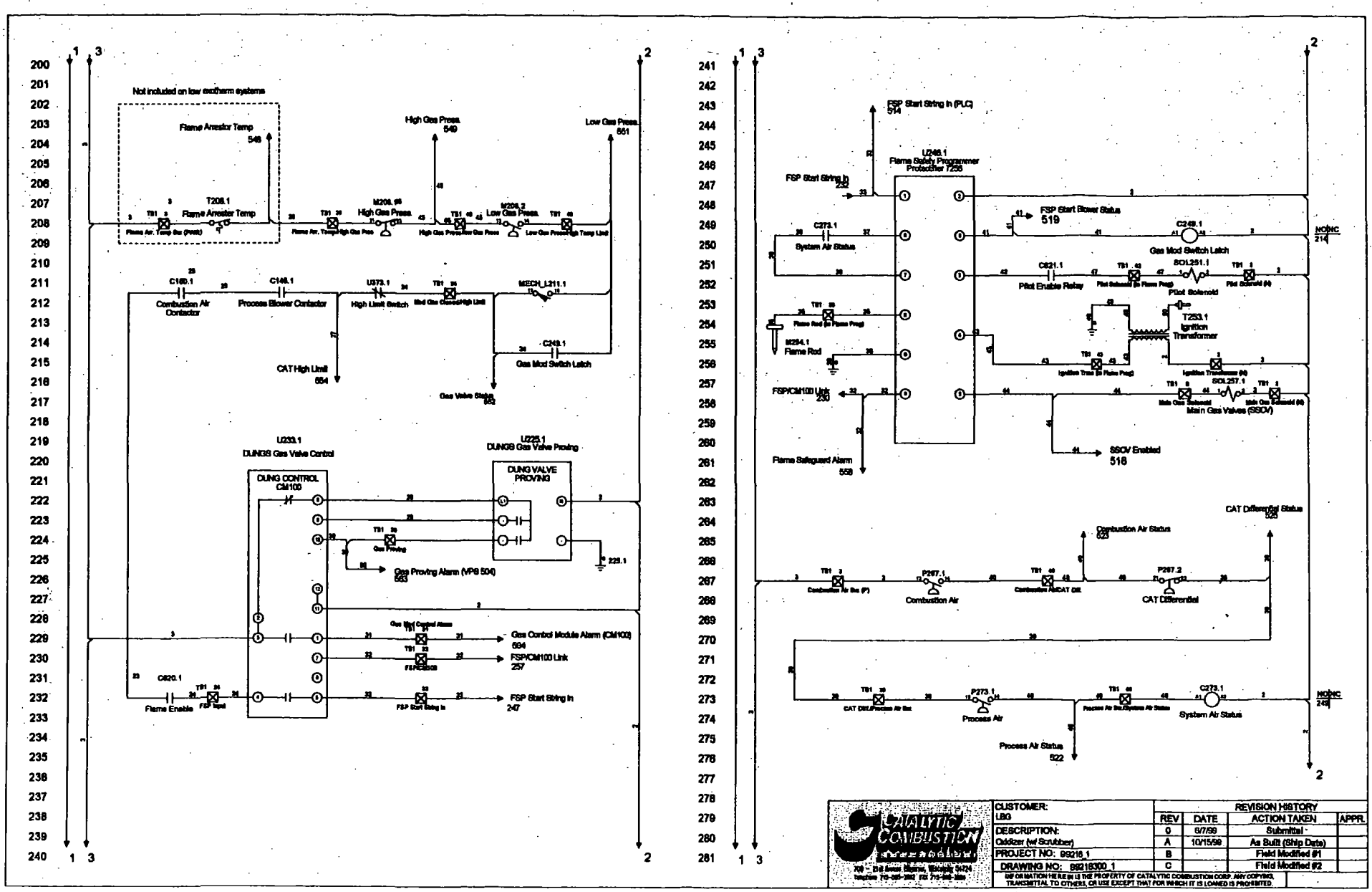

CUSTOMER: LBG	REVISION HISTORY			
	REV	DATE	ACTION TAKEN	APPR.
DESCRIPTION: Oxidizer (w/ Scrubber)	0	6/7/99	Submittal	
	A	10/15/99	As Built (Ship Date)	
PROJECT NO: 99216_1	B		Field Modified #1	
DRAWING NO: 99216300_1	C		Field Modified #2	

CATALYTIC COMBUSTION CORPORATION

INFORMATION HERE IN IS THE PROPERTY OF CATALYTIC COMBUSTION CORP. ANY COPYING, TRANSMITTAL TO OTHERS, OR USE EXCEPT THAT FOR WHICH IT IS LOANED IS PROHIBITED.

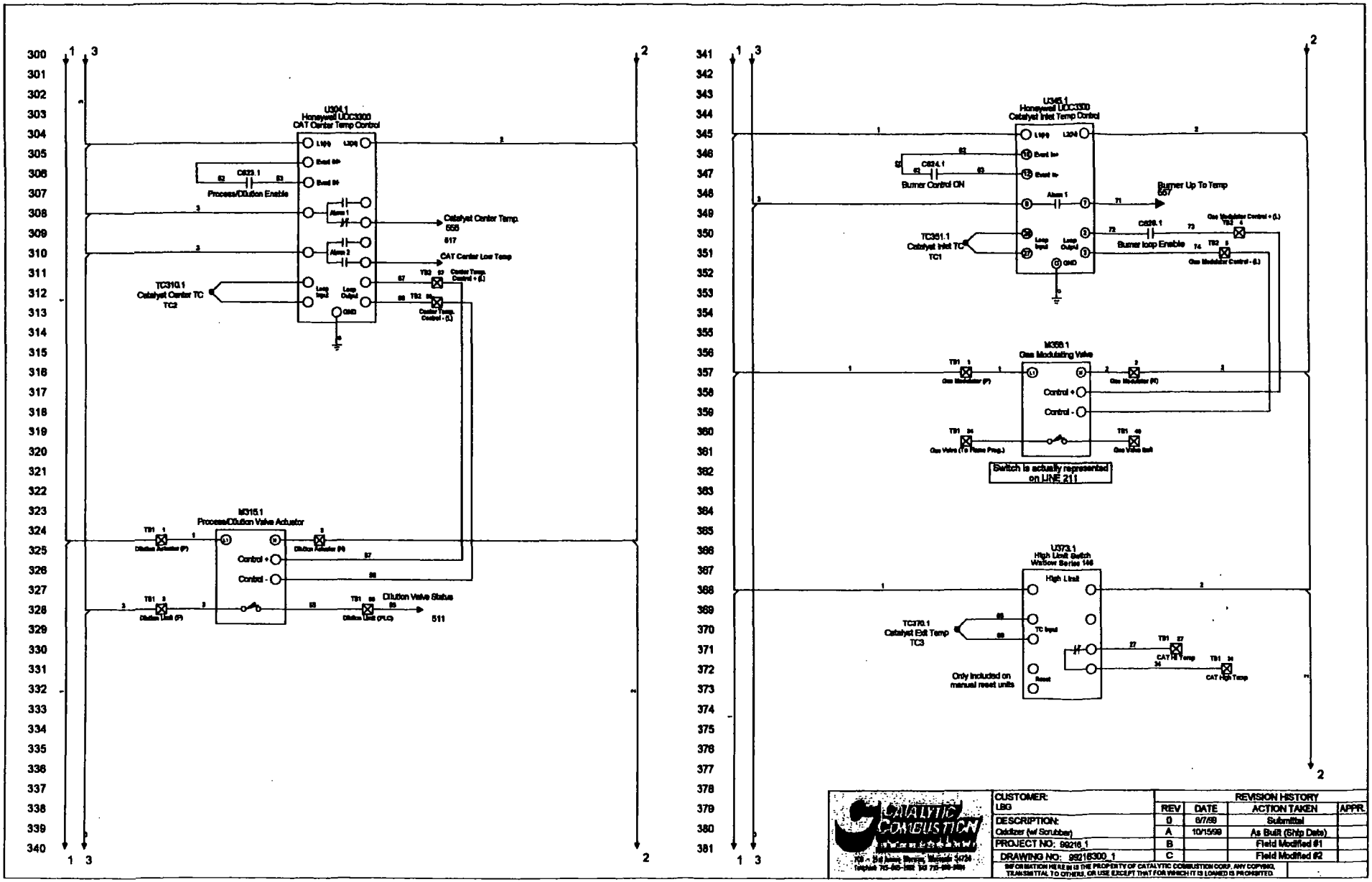
U304.1
Honeywell UDC3300
CAT Center Temp Control
Process/Dilution Enable
Catalyst Center Temp.
555
517
CAT Center Low Temp
TC310.1
Catalyst Center TC
TC2
M315.1
Process/Dilution Valve Actuator
Control +
Control -
Dilution Valve Status
511
U345.1
Honeywell UDC3300
Catalyst Inlet Temp Control
Burner Control ON
Burner Up To Temp
557
TC351.1
Catalyst Inlet TC
TC1
Burner loop Enable
M358.1
Gas Modulating Valve
Control +
Control -
Switch is actually represented on LINE 211
U373.1
High Limit Switch
Watlow Series 148
High Limit
TC370.1
Catalyst Exit Temp
TC3
Only included on manual reset units
CATALYTIC COMBUSTION
CUSTOMER:
LBG
DESCRIPTION:
Oxidizer (w/ Scrubber)
PROJECT NO: 99216_1
DRAWING NO: 99216300_1
REVISION HISTORY
REV | DATE | ACTION TAKEN | APPR.
0 | 6/7/99 | Submittal
A | 10/15/99 | As Built (Ship Date)
B | Field Modified #1
C | Field Modified #2
INFORMATION HERE IN IS THE PROPERTY OF CATALYTIC COMBUSTION CORP. ANY COPYING, TRANSMITTAL TO OTHERS, OR USE EXCEPT THAT FOR WHICH IT IS LOANED IS PROHIBITED.

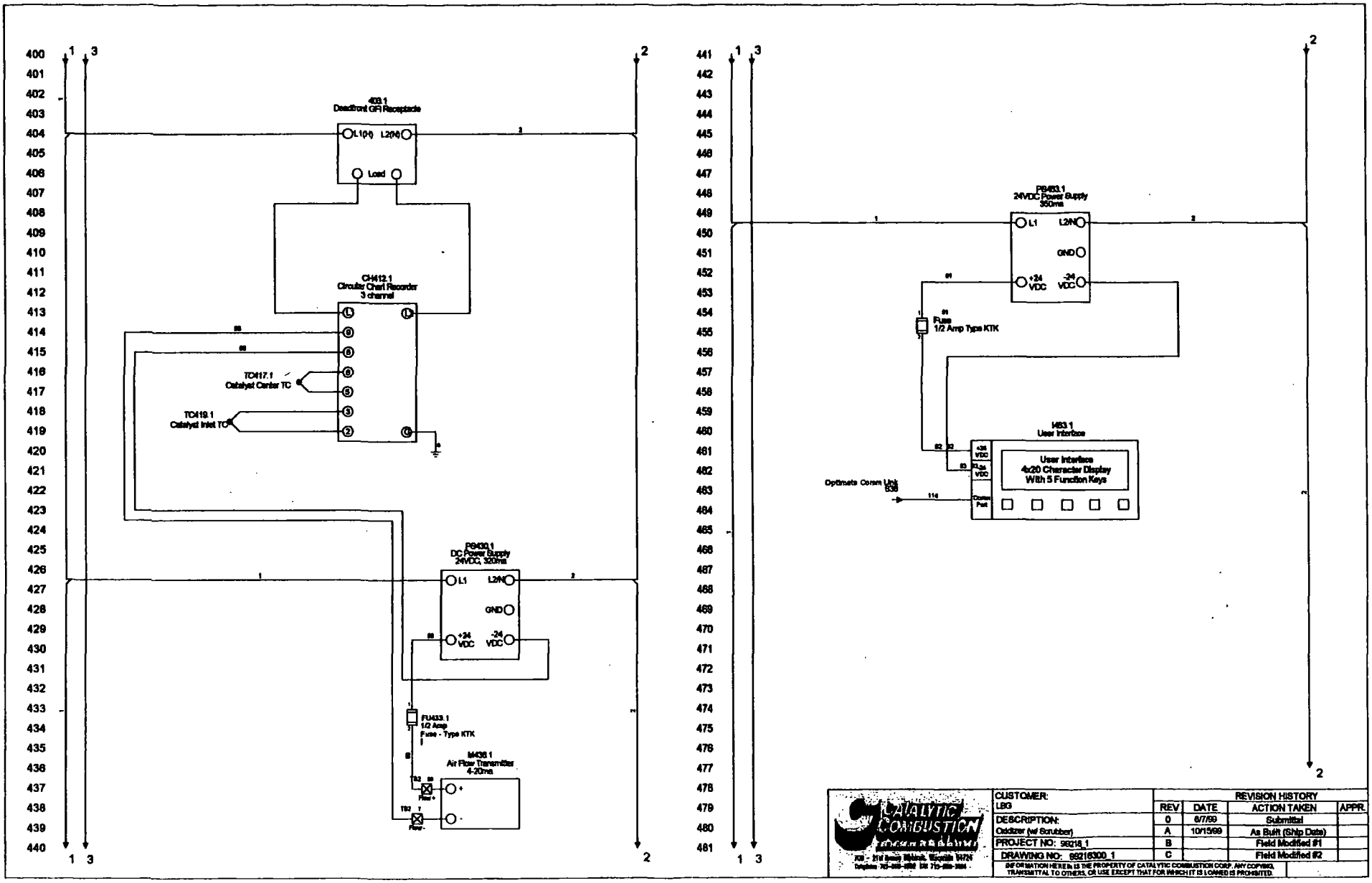
403.1
Deadfront GFI Receptacle
L1(+) L2(N)
Load
CH412.1
Circular Chart Recorder
3 channel
TC417.1
Catalyst Center TC
TC419.1
Catalyst Inlet TC
PS430.1
DC Power Supply
24VDC, 320ma
L1
L2/N
GND
+24 VDC
-24 VDC
FU433.1
1/2 Amp
Fuse - Type KTK
M436.1
Air Flow Transmitter
4-20ma
PS453.1
24VDC Power Supply
350ma
L1
L2/N
GND
+24 VDC
-24 VDC
Fuse
1/2 Amp Type KTK
H63.1
User Interface
User Interface
4x20 Character Display
With 5 Function Keys
Optimate Comm Unit
636
CATALYTIC COMBUSTION
CUSTOMER:
LBG
DESCRIPTION:
Oxidizer (w/ Scrubber)
PROJECT NO: 98218_1
DRAWING NO: 98216300_1
REVISION HISTORY
REV DATE ACTION TAKEN APPR.
0 6/7/99 Submittal
A 10/15/99 As Built (Ship Date)
B Field Modified #1
C Field Modified #2
INFORMATION HEREIN IS THE PROPERTY OF CATALYTIC COMBUSTION CORP. ANY COPYING, TRANSMITTAL TO OTHERS, OR USE EXCEPT THAT FOR WHICH IT IS LOANED IS PROHIBITED.

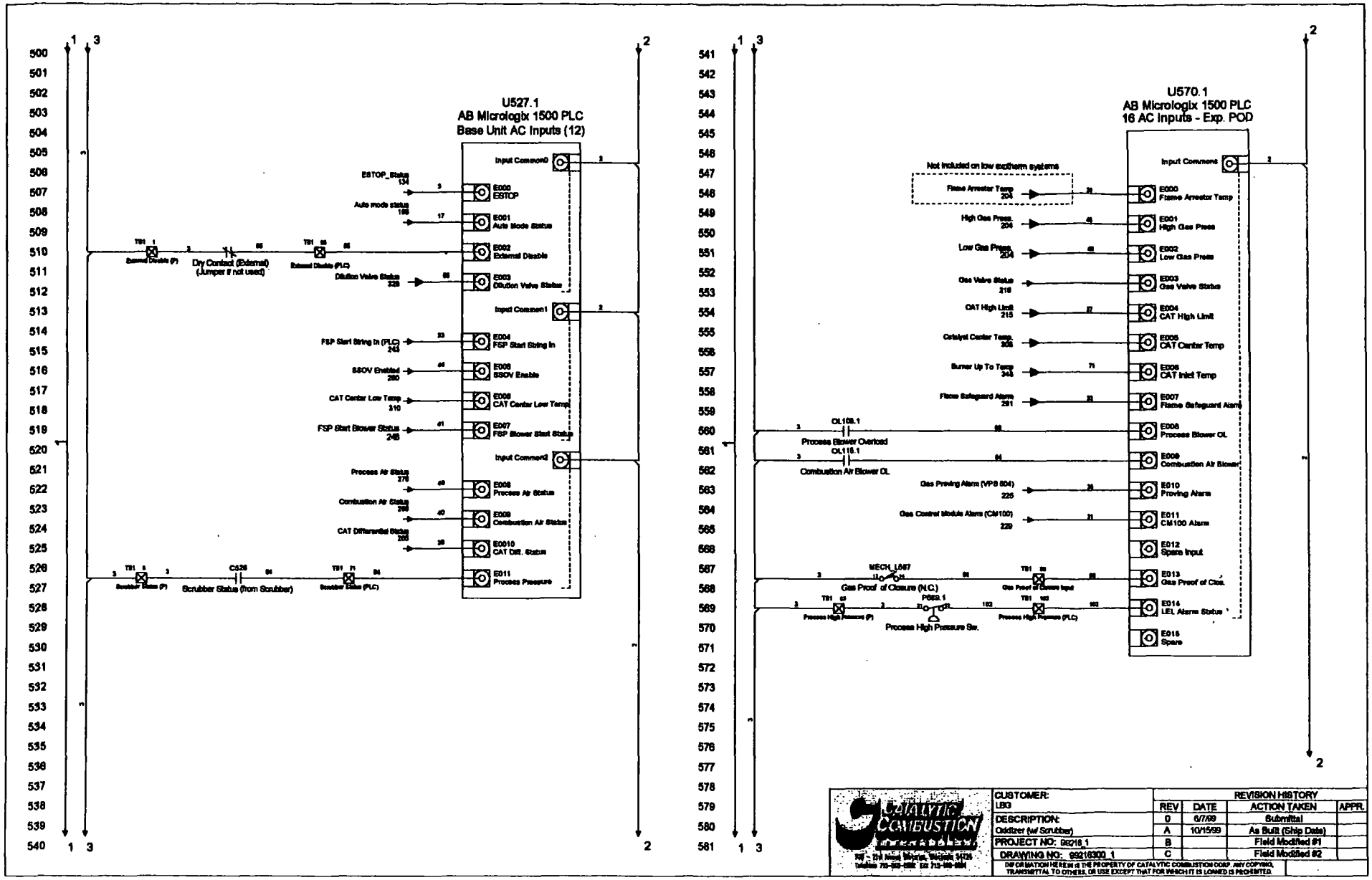
U527.1
AB Micrologix 1500 PLC
Base Unit AC Inputs (12)
Input Common0
E000 ESTOP
E001 Auto Mode Status
E002 External Disable
E003 Dilution Valve Status
Input Common1
E004 FSP Start String In
E005 SSOV Enable
E006 CAT Center Low Temp
E007 FSP Blower Start Status
Input Common2
E008 Process Air Status
E009 Combustion Air Status
E010 CAT Diff. Status
E011 Process Pressure
Dry Contact (External)
(Jumper if not used)
Scrubber Status (from Scrubber)
U570.1
AB Micrologix 1500 PLC
16 AC Inputs - Exp. POD
Input Commons
Not included on low exotherm systems
E000 Flame Arrestor Temp
E001 High Gas Press
E002 Low Gas Press
E003 Gas Valve Status
E004 CAT High Limit
E005 CAT Center Temp
E006 CAT Inlet Temp
E007 Flame Safeguard Alarm
E008 Process Blower OL
E009 Combustion Air Blower
E010 Proving Alarm
E011 CM100 Alarm
E012 Spare Input
E013 Gas Proof of Clos.
E014 LEL Alarm Status
E015 Spare
Process Blower Overload
Combustion Air Blower OL
Gas Proving Alarm (VPS 504)
Gas Control Module Alarm (CM100)
Gas Proof of Closure (N.C.)
Process High Pressure Sw.
CATALYTIC COMBUSTION
CUSTOMER:
LBG
DESCRIPTION:
Oxidizer (w/ Scrubber)
PROJECT NO: 99218_1
DRAWING NO: 99218300_1
REVISION HISTORY
REV DATE ACTION TAKEN APPR.
0 6/7/99 Submittal
A 10/15/99 As Built (Ship Date)
B Field Modified #1
C Field Modified #2
INFORMATION HEREIN IS THE PROPERTY OF CATALYTIC COMBUSTION CORP. ANY COPYING, TRANSMITTAL TO OTHERS, OR USE EXCEPT THAT FOR WHICH IT IS LOANED IS PROHIBITED.

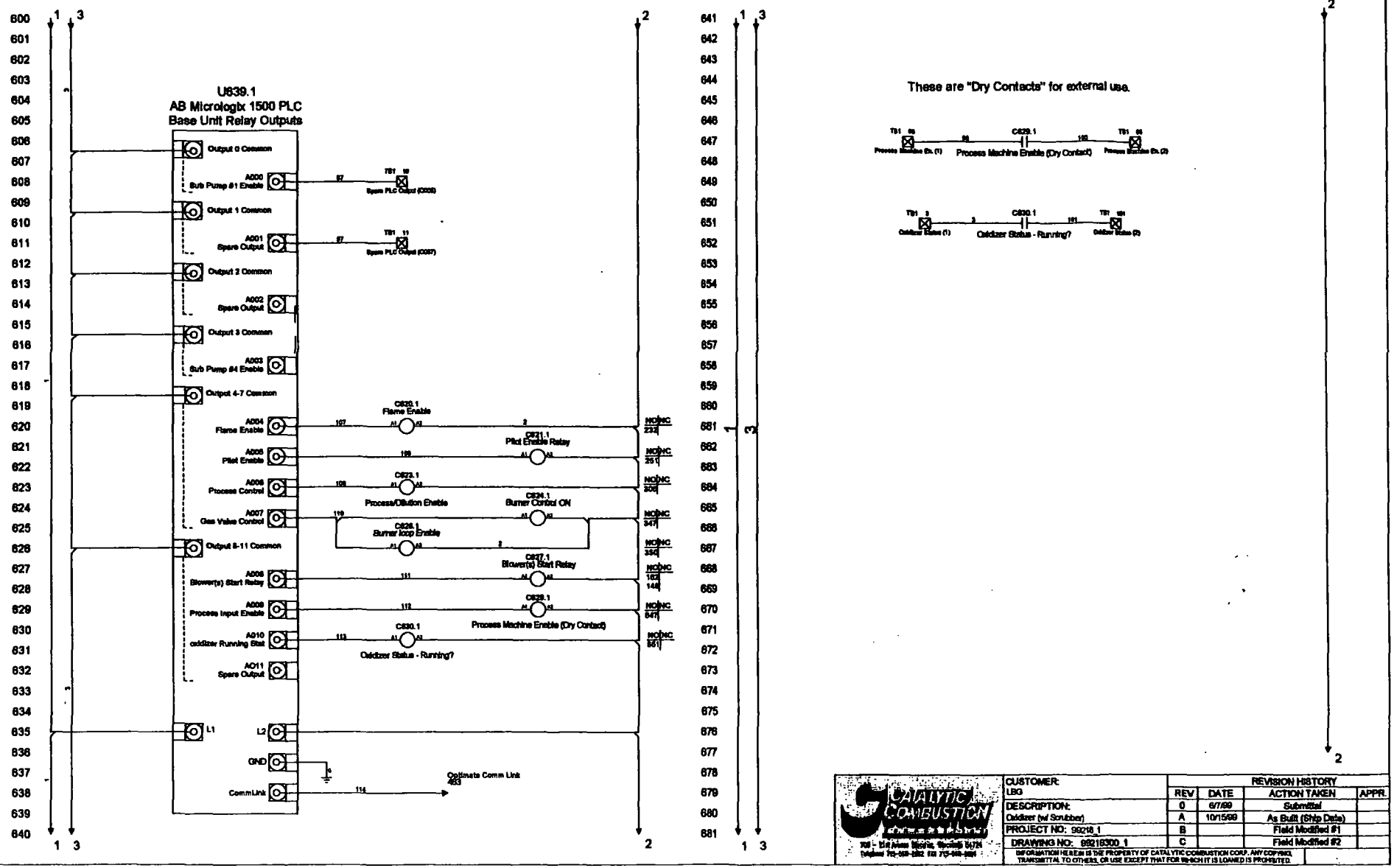

CATALYTIC COMBUSTION

CUSTOMER: LBG	REVISION HISTORY			
	REV	DATE	ACTION TAKEN	APPR.
DESCRIPTION: Oxidizer (w/ Scrubber)	0	6/7/99	Submittal	
	A	10/15/99	As Built (Ship Date)	
PROJECT NO: 99218_1	B		Field Modified #1	
DRAWING NO: 99218300_1	C		Field Modified #2	

INFORMATION HEREIN IS THE PROPERTY OF CATALYTIC COMBUSTION CORP. ANY COPYING, TRANSMITTAL TO OTHERS, OR USE EXCEPT THAT FOR WHICH IT IS LOANED IS PROHIBITED.

Wiring Instructions/Information

Terminal Block TB1 (120V)

Terminal block "TB1" represents all 120V terminal connections. The "Field Conn." column is marked with an "X" to identify required field connections.

All wiring shall be red 14 guage type THHN and must be isolated from low voltage wiring.

Warning: Follow appropriate guidlines when wiring to classified environment.

Field Conn.	Wire	Dest.	Function Text
		: TB1	120 Volt Terminal Strip
	1	TB1: 1	Gas Modulator (P)
X	3	TB1: 1	External Disable (P)
	1	TB1: 1	Dilution Actuator (P)
	2	TB1: 2	Ignition Transformer (N)
		TB1: 2	Pilot Solenoid (N)
	2	TB1: 2	Main Gas Solenoid (N)
	2	TB1: 2	Gas Modulator (N)
		TB1: 2	Dilution Actuator (N)
	3	TB1: 3	Flame Arr. Temp Sw. (PWR)
	3	TB1: 3	Combustion Air Sw. (P)
X	3	TB1: 3	Scrubber Status (P)
	3	TB1: 3	Dilution Limit (P)
X	3	TB1: 3	Oxidizer Status (1)
	44	TB1: 9	Main Gas Solenoid
	67	TB1: 10	Spare PLC Output (O006)
	67	TB1: 11	Spare PLC Output (O007)
	20	TB1: 20	OL/process Blower Stat
	21	TB1: 21	Process Blower Strt/blower Contactor
	24	TB1: 24	F&P Input
	26	TB1: 26	Flame Arr. Temp/High Gas Pres
	27	TB1: 27	CAT Hi Temp
	30	TB1: 30	Gas Proving
	31	TB1: 31	Gas Mod Control Alarm
	32	TB1: 32	F&P/CM/100
	33	TB1: 33	F&P Start String In
		TB1: 34	Gas Valve (To Flame Prog.)
	34	TB1: 34	Mod Gas Closed/High Limit
	34	TB1: 34	CAT High Temp
	35	TB1: 35	Flame Rod (to Flame Prog)
	39	TB1: 39	CAT Diff./Process Air Sw.
	40	TB1: 40	Combustion Air/CAT Diff.
	47	TB1: 42	Pilot Solenoid (to Flame Prog)
	43	TB1: 43	Ignition Trans (to Flame Prog)
	45	TB1: 45	High Gas Press/low Gas Press
	46	TB1: 46	Process Air Sw./System Air Status
		TB1: 48	Gas Valve limit
		TB1: 48	Low Gas Press/High Temp Limit
	55	TB1: 55	Dilution Limit (PLC)
	3	TB1: 63	Process High Pressure (P)
X	99	TB1: 65	Process Machine En. (1)
X	100	TB1: 66	Process Machine En. (2)
X	84	TB1: 71	Scrubber Status (PLC)
	88	TB1: 88	Gas Proof of Closure Input
X	95	TB1: 95	External Disable (PLC)
X	101	TB1: 101	Oxidizer Status (2)
	102	TB1: 102	Process High Pressure (PLC)
		: TB2	Low Voltage Terminal
		:	
		:	

Terminal Block TB2 & TB3 (Low Voltage)

Terminal block "TB2" & "TB3" represent all Low Voltage terminal connections. The "Field Conn." column is marked with an "X" to identify required field connections.

All wiring shall be blue 14 guage type THHN and must be isolated from all other wiring.

Warning: Follow appropriate guidlines when wiring to classified environment.

Field Conn.	Wire	Dest.	Function Text
		: TB1	120 Volt Terminal Strip
		: TB2	Low Voltage Terminal
	73	TB2 : 4	Gas Modulator Control + (L)
	74	TB2 : 5	Gas Modulator Control - (L)
	85	TB2 : 7	Flow -
	57	TB2 : 57	Center Temp.Control + (L)
	58	TB2 : 58	Center Temp.Control - (L)
	60	TB2 : 60	Flow +
		:	
		:	
		:	
		:	
		:	
		:	
		:	
		:	
		:	
		:	
		:	
		:	
		:	
		:	
		:	

KEY - See Function Text Column

P = connection to internal power rail (hot).
N = connection to internal nuetral.
PLC = connection to PLC I/O.
R = connection to internal reference point.
L - connection to internal low voltage signal.

INCOMING POWER - 460VAC/3PH/60HZ

Incoming power shall be wired to the disconnect provided, see schematic line #101. Wire must be sized to meet NEC & Local code requirements.

MOTOR CONNECTIONS

All field wiring for motors shall be black in color and sized to meet local and NEC requirements.

Connections are to be made directly from motor to overload block as shown on page 1 of the schematic.

All motor ground connections are to be connected to ground bar on panel.

Always isolate from any low voltage wiring.

The motors to be wired are shown below.

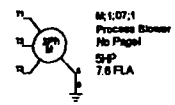

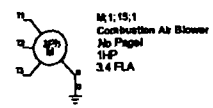

CATALYTIC COMBUSTION CORPORATION
Tel. 616 Kent Street, Whitby Ont.
Telephone 705-668-4800 Fax 705-668-3084

CUSTOMER: LBG Inc.	REVISION HISTORY			
	REV	DATE	ACTION TAKEN	APPR.
DESCRIPTION: Oxidizer (with Scrubber)	0	6/7/99	Submittal	
	A	6/10/99	As Built (Ship Date)	
PROJECT NO: 99-216_1	B		Field Modified #1	
DRAWING NO: 99216300_1	C		Field Modified #2	

INFORMATION HEREIN IS THE PROPERTY OF CATALYTIC COMBUSTION CORP. ANY COPYING, TRANSMITTAL TO OTHERS, OR USE EXCEPT THAT FOR WHICH IT IS LOANED IS PROHIBITED.

Field Wiring Diagram

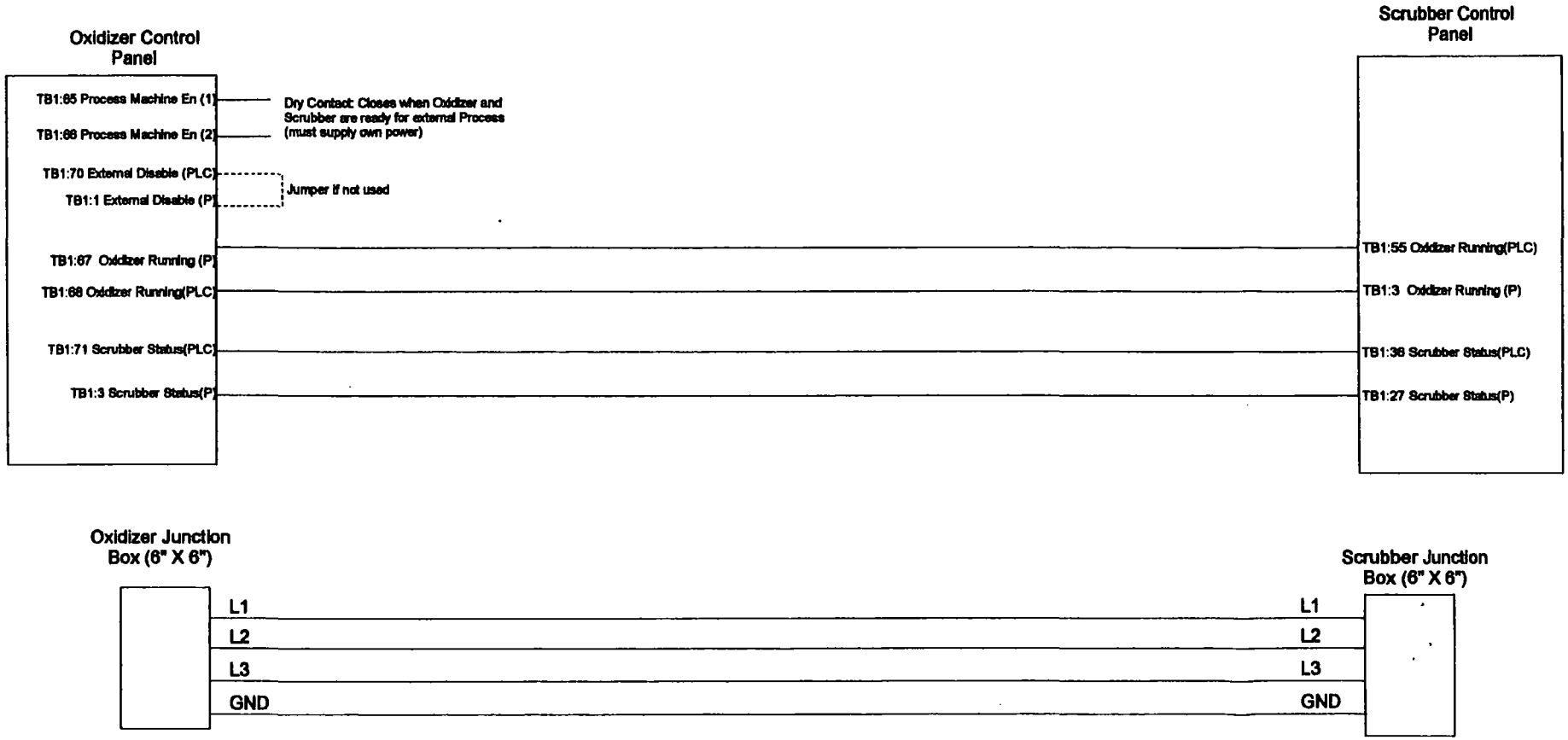

CATALYTIC COMBUSTION	CUSTOMER: LBQ	REVISION HISTORY		
	DESCRIPTION: Oxidizer (w/ Scrubber	REV	DATE	ACTION TAKEN	APPR.
			12/2000	Submittal	
			10/2000	As Built	
	PROJECT NO: 99218_1			Field Mod #1	
	DRAWING NO: 99218300_1			Field Mod #2	
	INFORMATION HEREIN IS THE PROPERTY OF CATALYTIC COMBUSTION CORP. ANY COPYING, TRANSMITTAL TO OTHERS, OR USE EXCEPT THAT FOR WHICH IT IS LOANED IS PROHIBITED.	PAGE:	OF: 13	

CCC Project 99-216 - Oxidizer Control Panel

Jump to input mapping subroutine file.

JSR
Jump To Subroutine
SBR File Number U:3

Jump to Optimate 640 communication subroutine file.

0001 JSR
Jump To Subroutine
SBR File Number U:4

Jump to control subroutine file.

0002 JSR
Jump To Subroutine
SBR File Number U:5

Jump to alarm subroutine file.

0003 JSR
Jump To Subroutine
SBR File Number U:6

Jump to meter subroutine file.

0004 JSR
Jump To Subroutine
SBR File Number U:7

Jump to output mapping subroutine file.

JSR
Jump To Subroutine
SBR File Number U:8

0006 (END)

Turn off input test bits on first scan.

First Pass
S:1
15

TEST_1
MOV
Move
Source 0
0<
Dest B3:20
0000000000000000<

TEST_2
MOV
Move
Source 0
0<
Dest B3:21
0000000000000000<

The program is built using internal bits for input conditions and connected to the real world inputs in this section. This allows for a change in the PLC inputs from job to job without changing the basic control logic.
All inputs are copied to a memory bit. Input inversions are handled here and carry through the rest of the program.
Inputs are wired failsafe where required. This means that the safe condition is indicated by an "on" signal so that a broken wire or failed signal will be seen as an alarm.

Flame Arrest Temp is a N.C. contact (open = alarm)

0001
On when flame arrestor temp is OK.
FLAME_ARRESTOR_TEMP I:1 0 1769-IA16
FLAME_ARREST_TEST B3:20 0
FLAME_ARREST_TEMP B3:2 0

High Gss Pressure is a N.C. contact (open = alarm).

0002
On when high gas pressure switch is OK.
HIGH_GAS_PRESS I:1 1 1769-IA16
On when flame arrestor temp is OK.
FLAME_ARRESTOR_TEMP I:1 0 1769-IA16
HI_GAS_PRESS_TEST B3:20 1
HIGH_GAS_PRESSURE B3:2 1

Low Gas Pressure is a N.O. contact (closed = OK).

0003
On when low gas pressure switch is OK.
LOW_GAS_PRESS I:1 2 1769-IA16
On when high gas pressure switch is OK.
HIGH_GAS_PRESS I:1 1 1769-IA16
LO_GAS_PRESS_TEST B3:20 2
LOW_GAS_PRESSURE B3:2 2

Gas Modulating Valve Limit Switch is a N.C. it indicates the gas valve is closed (open = alarm).

0004
On when gas modulating valve is closed.
GAS_VALVE_STATUS I:1 3 1769-IA16
On when gas valve is proved closed.
GAS_VLV_CLSD I:1 13 1769-IA16
GAS_MOD_CLOSED B3:2 3

GAS_VLV_CLSD_TEST
B3:20
3

High Temp Limit Switch - this is the Catalyst final temperature safety switch. N.C. (open = alarm).
On when CAT high
limit switch is OK.

0005 CAT_HIGH_LIM_STATUS I:1 4 (1769-IA16) — HI_TEMP_LIMIT_TEST B3:20 4 — HIGH_TEMP_LIMIT B3:2 4

Catalyst Center (TC2) temperature too high, N.C. contact (open = alarm) .
On when catalyst
center temperature
is OK.

0006 CAT_CENT_TEMP_STATUS I:1 5 (1769-IA16) — CENTER_HI_TEMP_TEST B3:20 5 — CAT_CENT_TEMP_HIGH B3:2 5

Flame Safeguard device alarm signal, N.O. contact (closed = alarm).
On when flame
safeguard alarm.

0007 FS_ALARM_STATUS I:1 7 (1769-IA16) — FLAME_SAFE_FAIL_TEST B3:20 6 — FLAME_SAFE_FAIL B3:2 6

Burner controller has reached setpoint, N.O. contact (closed = at temp).
On when burner is up
to temperature.

0008 BURNER_TEMP_OK I:1 6 (1769-IA16) — BURNER_UP_TO_TEMP B3:2 7
BURNER_TEMP_OK_TEST B3:20 7

Burner ON signal comes from the Flame safeguard main gas valve enable signal, (ON voltage activates input).
On when main gas
valve is enabled.

0009 SSOV_ENBL I:0 5 (Bul.1764) — SSOV_ENABLE B3:2 8
SSOV_ENABLE_TEST B3:20 8

Dilution valve full open, (Limit switch closed when valve open). When the dilution valve is indicating not open (closed or moving to closed position) the catalyst center temperature controller has energized the dilution valve to close and the process valve to open.

0010

On when dilution valve is closed.
DIL_VLV_STATUS I:0 3 Bul.1764
DIL_VLV_OPEN_TEST B3:20 9
DILUTION_OPEN B3:2 9

Indicates ESTOP status (ON = OK).

0011

On when e-stop OK.
E_STOP I:0 0 Bul.1764
ESTOP_TEST B3:20 10
ESTOP_STATUS B3:2 10

Flame safeguard - start blower signal (ON - OK to start blowers).

0012

On to start blower.
FSP_START_BLWR I:0 7 Bul.1764
FSP_START_BLWR_TEST B3:20 11
FSP_START_BLOWER B3:2 11

This is a point at the end of the flame safety string. If this is OK we can set FLAME ENABLE contacts and START. (ON=OK).

0013

On for flame safety start.
FSP_START I:0 4 Bul.1764
FSP_START_STR_TEST B3:20 12
FSP_START_STRING B3:2 12

Auto mode status - all HOA switches in auto mode??? (ON = OK).

0014

On when all switches in "auto".
AUTO_MODE I:0 1 Bul.1764
AUTO_MODE_TEST B3:20 13
AUTO_MODE_STATUS B3:2 13

The External disable is from a Dry Contact(s), series wired if multiple are required. The contact closes to enable the Oxidizer to run (Open = Alarm).

0015

On when externally enabled. Jumper if not used.

EXT_ENABLE I:0 2 Bul.1764 — EXT_ENABLE_TEST B3:20 14 — EXTERNAL_DISABLE B3:2 14

Scrubber status enables the oxidizer to start - the source is a set of dry contacts controlled by the Scrubber. (Closed = RUN).

0016

On when scrubber running.

SCRUB_STATUS I:0 11 Bul.1764 — SCRUBBER_STATUS B3:2 15

SCRUB_STATUS_TEST B3:20 15

0017

Used for holding place on I/O mapping.

ALWAYS_OFF B3:4 0 — SPARE_INPUT1 B3:3 0

Low catalyst temperature not used on this project.

0018

CAT_CENT_TEMP_LOW I:0 6 Bul.1764 — CAT_LO_TEMP_TEST B3:21 1 — CAT_LOW_TEMP B3:3 1

Combustion Air blower Overload condition, N.O. contacts (closed = OL).

0019

On when combustion air blower overload.

COMB_BLWR_OL I:1 9 1769-IA16 — COMB_AIR_OL_TEST B3:21 2 — COMBUSTION_AIR_OL B3:3 2

Combustion Air run status - not used on this project.

0020

Used for holding place on I/O mapping.

ALWAYS_OFF B3:4 0 — COMBUST_AIR_STATUS B3:3 3

COMBAIR_RUN_TEST_ B3:21 3

Process Blower overload condition, N.O. contacts (closed = OL).
On when process
blower overload.

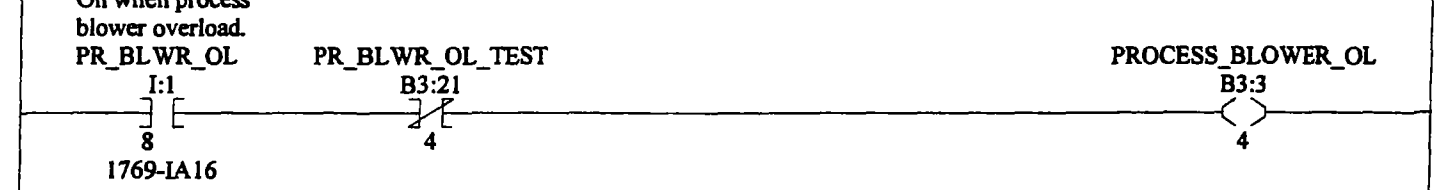

Process blower run status - Not used on this project
Used for holding
place on I/O
mapping.

0022

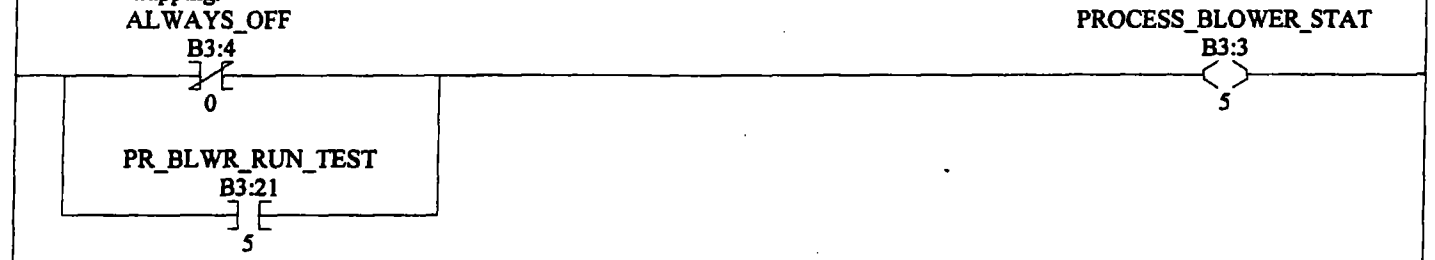

Process airflow switch, N.O. contacts (closed = OK). This is a power tap to the PLC from a string of the airflow detectors (low, differental and high pressure indicators).
On when process air
is flowing.

0023

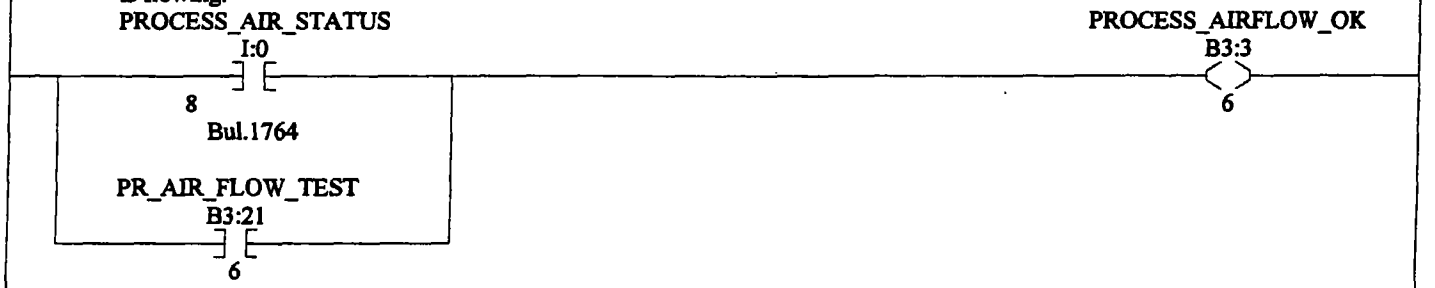

Air flow (process/dilution) high pressure indication, N.C contacts, (open = Fault).
This is a power tap to the PLC from a string of the airflow detectors (low, differental and high pressure indicators).
On when process high
pressure switch
is OK.

0024

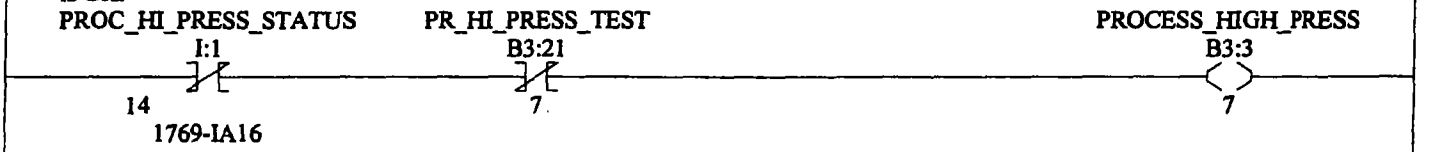

Dilution valve full closed limit switch, N.O. contacts (closed = valve closed).
On when dilution
valve is closed.

0025

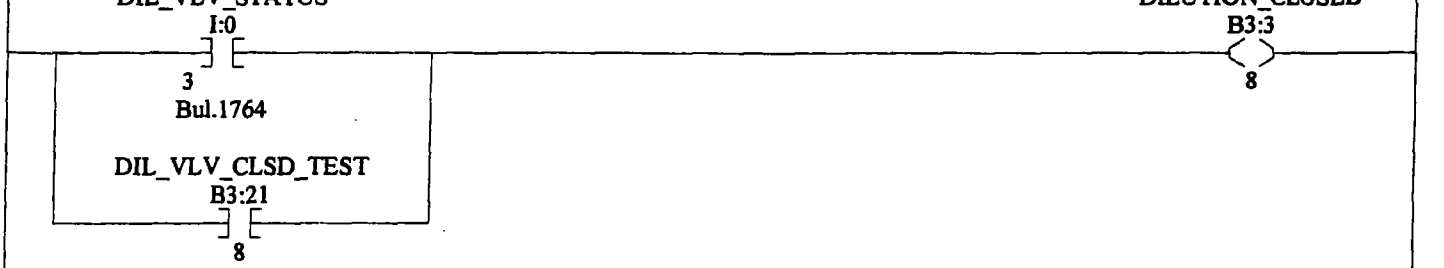

Gas control module (Dungs CM100 device) alarm signal, N.O. contacts, (closed = alarm).

0026

On when there is a gas control module alarm condition.
GAS_CNTR_MOD_ALARM I:1 11 1769-IA16 — GAS_CNTR_STATUS_TEST B3:21 9 — GAS_CONTROL_STAT B3:3 9

Gas Valve proving system fault indicator. This signal comes from the VPS504 device, it is a voltage tap to the PLC (high = Fault).

0027

On when a gas proving alarm condition.
GAS_PROVING_ALARM I:1 10 1769-IA16 — GAS_PROOF_TEST B3:21 10 — GAS_PROVING_STATUS B3:3 10

Combustion Airflow indication. N.O. contacts (closed = OK).
This is a power tap to the PLC from a string of the airflow detectors (low, differental and high pressure indicators).

0028

On when combustion air is flowing.
COMB_AIR_STATUS I:0 9 Bul.1764 — COMB_AIRFLOW_OK B3:3 11
COMB_AIR_FLOW_TEST B3:21 11

Catalyst differential pressure indication, N.C. contacts, (open = alarm).

0029

On when CAT differential press is OK.
CAT_DIFF_STATUS I:0 10 Bul.1764 — On when combustion air is flowing. COMB_AIR_STATUS I:0 9 Bul.1764 — CAT_DIFF_PRESS_TEST B3:21 12 — CAT_DIFF_PRESS_STAT B3:3 12

This is the safety string status at the Flame Safeguard Input - (On = OK to start).

0030

On for flame safety start.
FSP_START I:0 4 Bul.1764 — FSP_STRING_IN_STATUS B3:3 13
FSP_STRING_IN_TEST B3:21 13

END

The Optimate 640 user interface STATUS word is located at N7:12. Move this to a BIT status word:

F1 Start	B3:0/0
F2 Stop	B3:0/1
F3 Alrm Reset	B3:0/2
F4 Burner Log	B3:0/3
F5 Help	B3:0/4

0000

OP640_STATUS
MOV
Move
Source N7:12
0<
Dest B3:0
0000000000000000<

Display at this point in the scan. During the rest of the scan the proper settings will be made for current conditions. The PLC communicates data to the Optimate only at the end of the scan.

0001

OP640_CONTROL
MOV
Move
Source 0
0<
Dest B3:1
0000000000000010<

1ST_LINE_MESSAGE
MOV
Move
Source 1
1<
Dest N7:0
8<

2ND_LINE_MESSAGE
MOV
Move
Source 1
1<
Dest N7:1
17<

3RD_LINE_MESSAGE
MOV
Move
Source 1
1<
Dest N7:2
15<

4TH_LINE_MESSAGE
MOV
Move
Source 1
1<
Dest N7:3
14<

ALARM DISPLAY
If an alarm exists, then show the alarm condition on lines 3 and 4.
Move alarm condition message to 3rd line.
Move alarm condition to 4th line.

0002

EXISTING_ALARM
B3:30
0

OP640_CONTROL
MOV
Move
Source 9
9<
Dest B3:1
0000000000000010<

3RD_LINE_MESSAGE
MOV
Move
Source 10
10<
Dest N7:2
15<

FLAME_ARR_TEMP_ALARM/DN
T4:0
DN

4TH_LINE_MESSAGE
MOV
Move
Source 30
30<
Dest N7:3
14<

HIGH_GAS_PRESS_ALARM/DN
T4:1
DN

4TH_LINE_MESSAGE
MOV
Move
Source 31
31<
Dest N7:3
14<

LOW_GAS_PRESS_ALARM/DN
T4:2
DN

4TH_LINE_MESSAGE
MOV
Move
Source 32
32<
Dest N7:3
14<

GAS_MOD_CLOSED_ALARM/DN
T4:3
DN

4TH_LINE_MESSAGE
MOV
Move
Source 46
46<
Dest N7:3
14<

HIGH_TEMP_ALARM/DN
T4:4
DN

4TH_LINE_MESSAGE
MOV
Move
Source 33
33<
Dest N7:3
14<

CENT_TEMP_HI_ALARM/DN
T4:5
DN

4TH_LINE_MESSAGE
MOV
Move
Source 34
34<
Dest N7:3
14<

FLAME_SAFEGUARD_ALRM/DN
T4:6
DN

4TH_LINE_MESSAGE
MOV
Move
Source 36
36<
Dest N7:3
14<

AUTO_MODE_ALARM/DN
T4:13
DN

4TH_LINE_MESSAGE
MOV
Move
Source 76
76<
Dest N7:3
14<

EXT_ENABLE_ALARM/DN
T4:14
DN

4TH_LINE_MESSAGE
MOV
Move
Source 40
40<
Dest N7:3
14<

SCRUBBER_STAT_ALARM/DN
T4:15
DN

4TH_LINE_MESSAGE
MOV
Move
Source 77
77<
Dest N7:3
14<

LOW_TEMP_ALARM/DN
C5:10
DN

4TH_LINE_MESSAGE
MOV
Move
Source 37
37<
Dest N7:3
14<

COMBUST_AIR_OL_ALARM/DN
T4:18
DN

4TH_LINE_MESSAGE
MOV
Move
Source 43
43<
Dest N7:3
14<

PROC_BLOWER_OL_ALARM/DN
T4:20
DN

4TH_LINE_MESSAGE
MOV
Move
Source 41
41<
Dest N7:3
14<

PROC_AIRFLW_LOW_ALRM/DN
T4:22
DN

4TH_LINE_MESSAGE
MOV
Move
Source 35
35<
Dest N7:3
14<

PROC_HIGH_PRESS_ALRM/DN
T4:23
DN

4TH_LINE_MESSAGE
MOV
Move
Source 73
73<
Dest N7:3
14<

GAS_CNTRL_CM100_ALRM/DN
T4:25
DN

4TH_LINE_MESSAGE
MOV
Move
Source 51
51<
Dest N7:3
14<

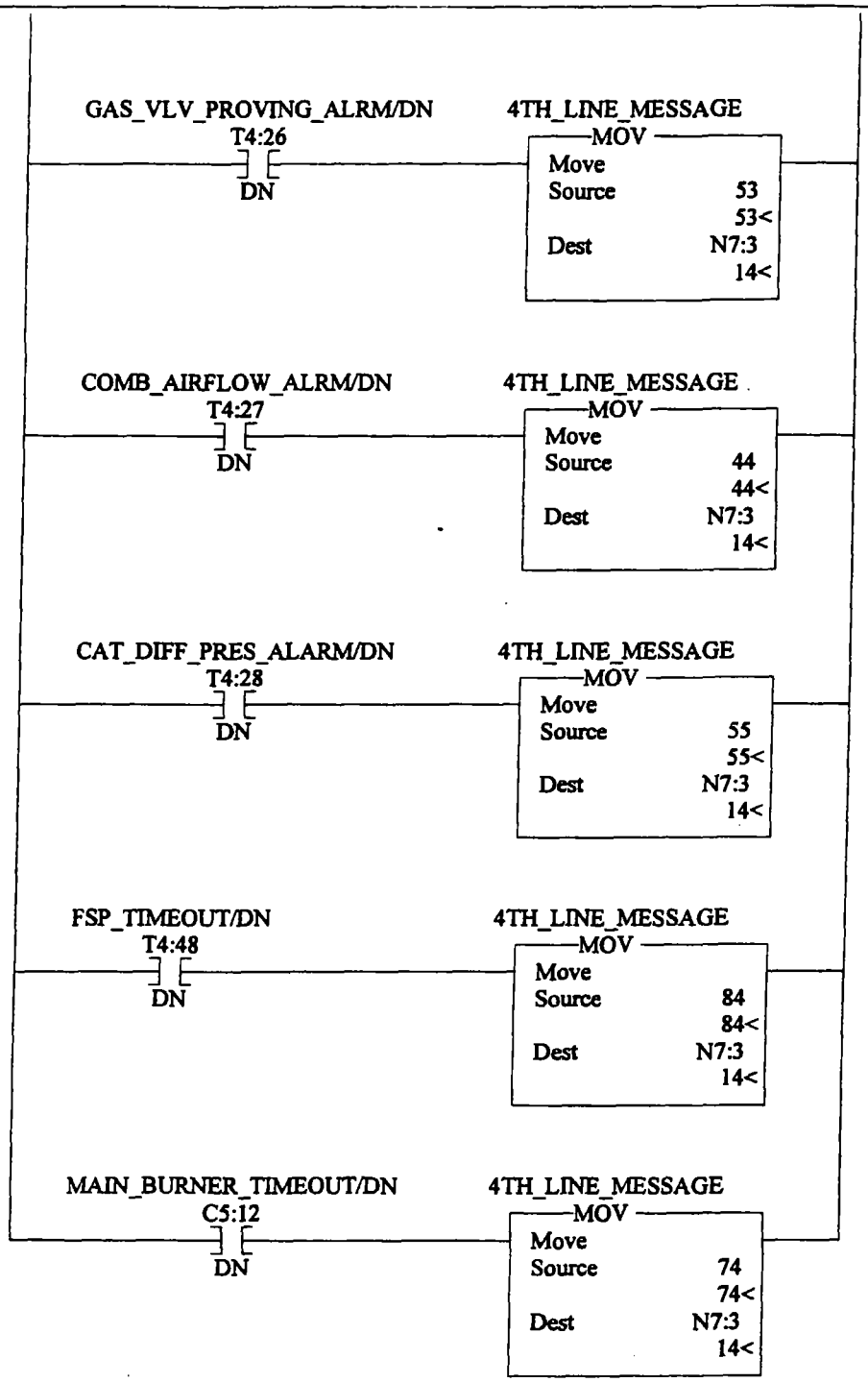

SETUP DISPLAY
Move "Setup Mode" message to 1st line.
If a setup fault condition exists, show condition message on 2nd line and turn on yellow lamp.
If a no setup faults exist, show setup complete message on lines 2 and 3 and turn yellow lamp on.
If a latched alarm condition exists, show on lines 3 and 4 and turn on red lamp instead.

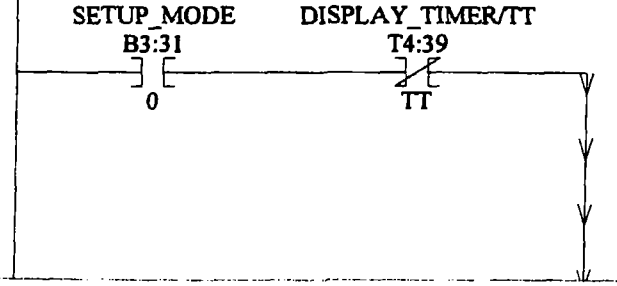

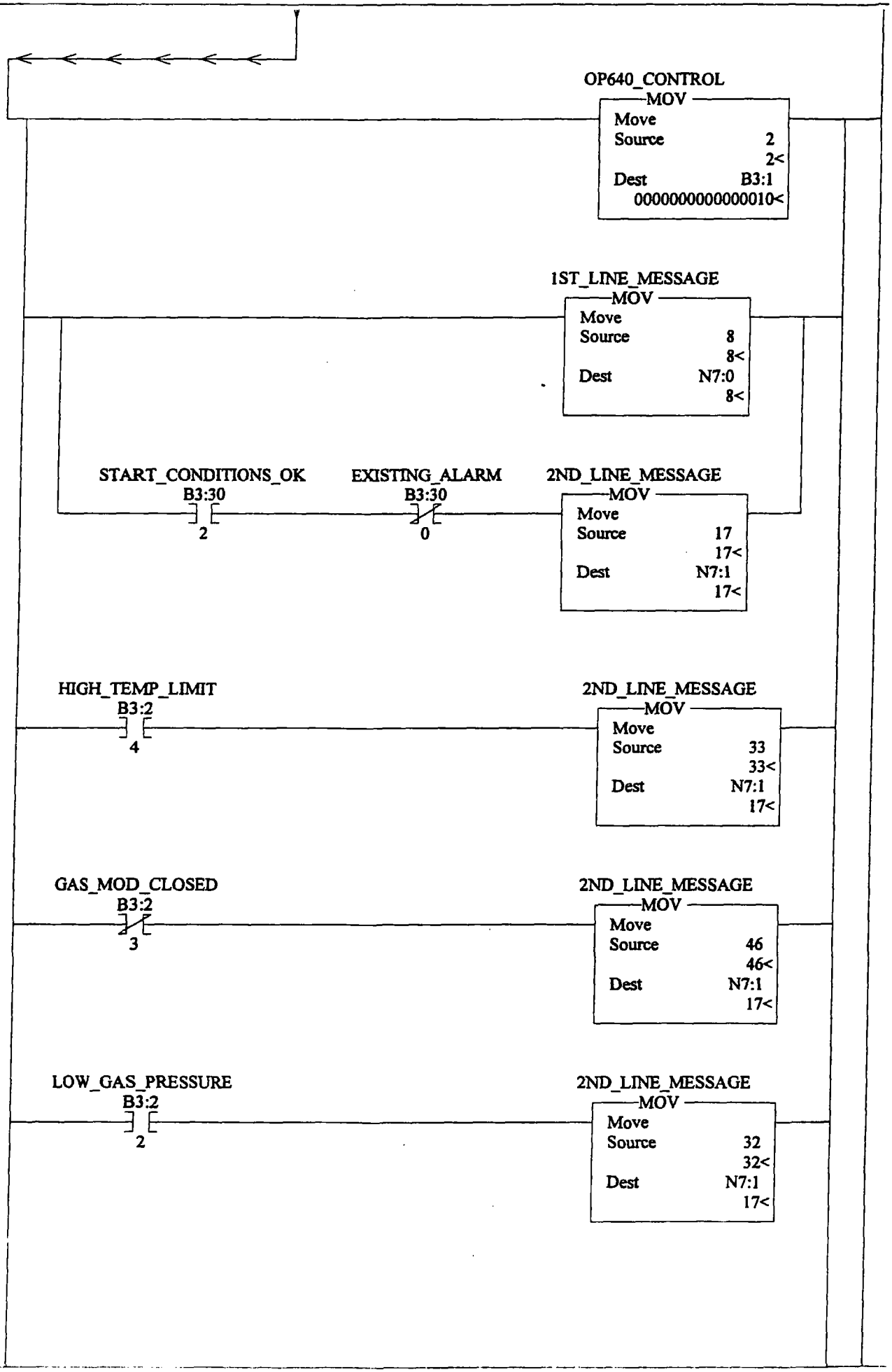
OP640_CONTROL
MOV
Move
Source 2
2<
Dest B3:1
0000000000000010<
1ST_LINE_MESSAGE
MOV
Move
Source 8
8<
Dest N7:0
8<
START_CONDITIONS_OK
B3:30
2
EXISTING_ALARM
B3:30
0
2ND_LINE_MESSAGE
MOV
Move
Source 17
17<
Dest N7:1
17<
HIGH_TEMP_LIMIT
B3:2
4
2ND_LINE_MESSAGE
MOV
Move
Source 33
33<
Dest N7:1
17<
GAS_MOD_CLOSED
B3:2
3
2ND_LINE_MESSAGE
MOV
Move
Source 46
46<
Dest N7:1
17<
LOW_GAS_PRESSURE
B3:2
2
2ND_LINE_MESSAGE
MOV
Move
Source 32
32<
Dest N7:1
17<

HIGH_GAS_PRESSURE
B3:2
1

2ND_LINE_MESSAGE
MOV
Move
Source 31
31<
Dest N7:1
17<

FLAME_ARREST_TEMP
B3:2
0

2ND_LINE_MESSAGE
MOV
Move
Source 30
30<
Dest N7:1
17<

DILUTION_OPEN
B3:2
9

2ND_LINE_MESSAGE
MOV
Move
Source 71
71<
Dest N7:1
17<

AUTO_MODE_STATUS
B3:2
13

2ND_LINE_MESSAGE
MOV
Move
Source 76
76<
Dest N7:1
17<

SCRUBBER_STATUS
B3:2
15

2ND_LINE_MESSAGE
MOV
Move
Source 77
77<
Dest N7:1
17<

EXTERNAL_DISABLE
B3:2
14

2ND_LINE_MESSAGE
MOV
Move
Source 78
78<
Dest N7:1
17<

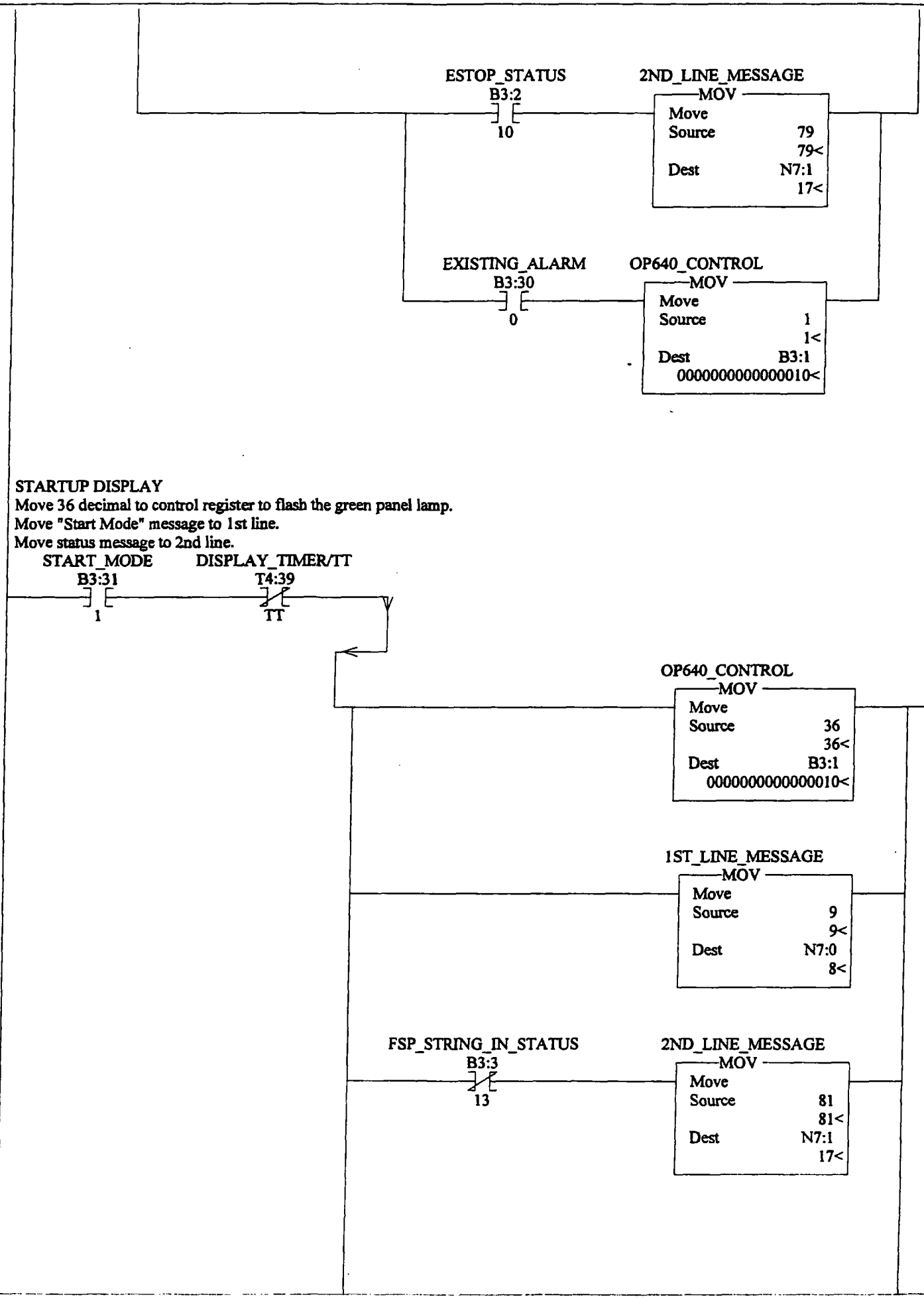
ESTOP_STATUS
B3:2
10
2ND_LINE_MESSAGE
MOV
Move
Source 79
79<
Dest N7:1
17<
EXISTING_ALARM
B3:30
0
OP640_CONTROL
MOV
Move
Source 1
1<
Dest B3:1
0000000000000010<
STARTUP DISPLAY
Move 36 decimal to control register to flash the green panel lamp.
Move "Start Mode" message to 1st line.
Move status message to 2nd line.
START_MODE
B3:31
1
DISPLAY_TIMER/TT
T4:39
TT
0004
OP640_CONTROL
MOV
Move
Source 36
36<
Dest B3:1
0000000000000010<
1ST_LINE_MESSAGE
MOV
Move
Source 9
9<
Dest N7:0
8<
FSP_STRING_IN_STATUS
B3:3
13
2ND_LINE_MESSAGE
MOV
Move
Source 81
81<
Dest N7:1
17<

PURGE_PILOT_ON_TIMER/TT
T4:49
TT

2ND_LINE_MESSAGE
MOV
Move
Source 82
82<
Dest N7:1
17<

PURGE_PILOT_ON_TIMER/DN
T4:49
DN

2ND_LINE_MESSAGE
MOV
Move
Source 85
85<
Dest N7:1
17<

RUN DISPLAY
Move 4 decimal to control register to turn on green panel lamp.
Move "Run Mode" message to 1st line.
Move status message to 2nd line.

0005

RUN_MODE
B3:31
2

DISPLAY_TIMER/TT
T4:39
TT

OP640_CONTROL
MOV
Move
Source 4
4<
Dest B3:1
0000000000000010<

1ST_LINE_MESSAGE
MOV
Move
Source 7
7<
Dest N7:0
8<

BURNER_UP_TO_TEMP
B3:2
7

2ND_LINE_MESSAGE
MOV
Move
Source 13
13<
Dest N7:1
17<

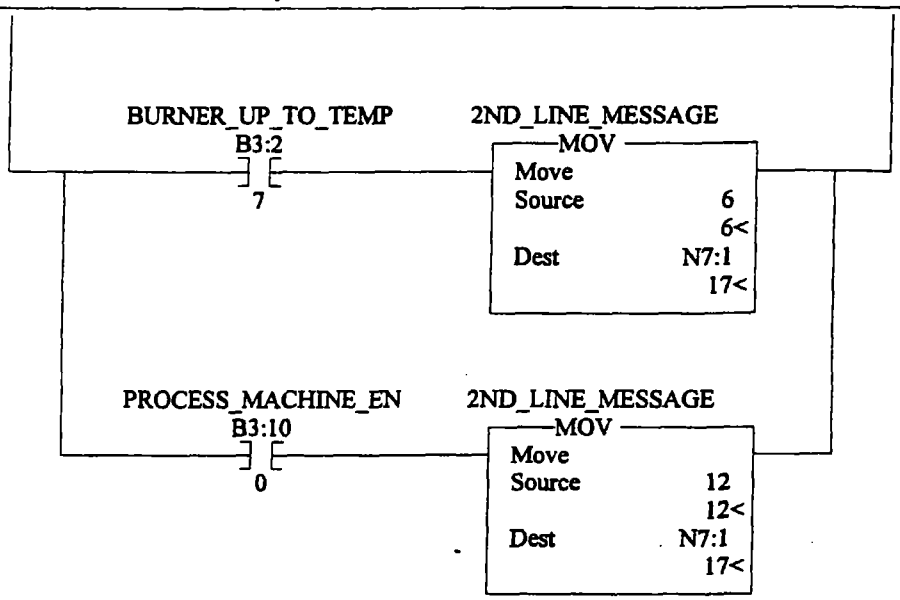

SHUTDOWN DISPLAY
Move "Shutdown Mode" message to 1st line.
If there is not an existing alarm condition, move decimal 18 to control word toturn on the yellow panel lamp and move the "Normal Shutdown" message to the 2nd line.
If there ist an existing alarm condition, move decimal 2 to control word to flash the yellow panel lamp and move the "System Shutting Down" message to the 2nd line.

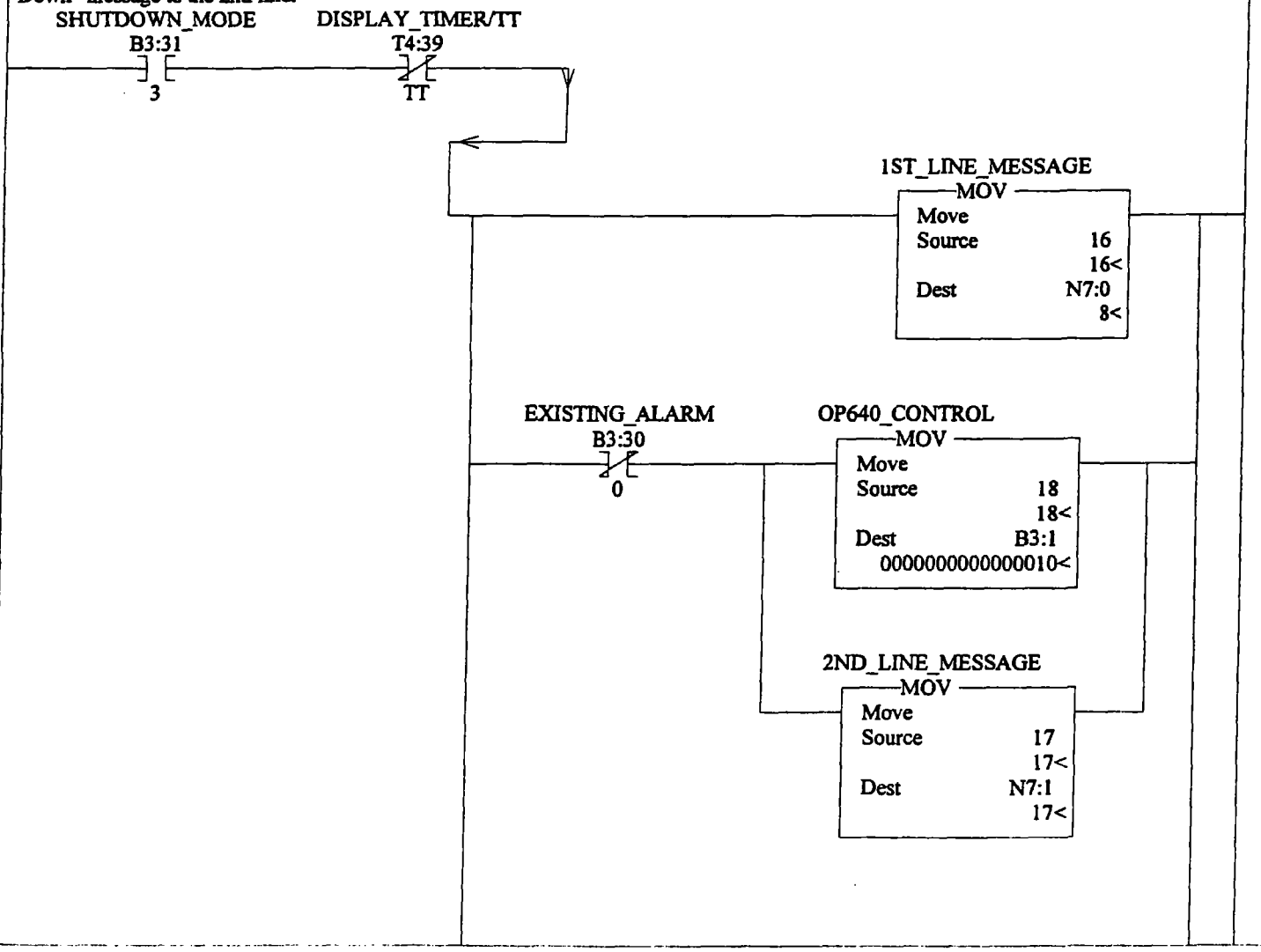

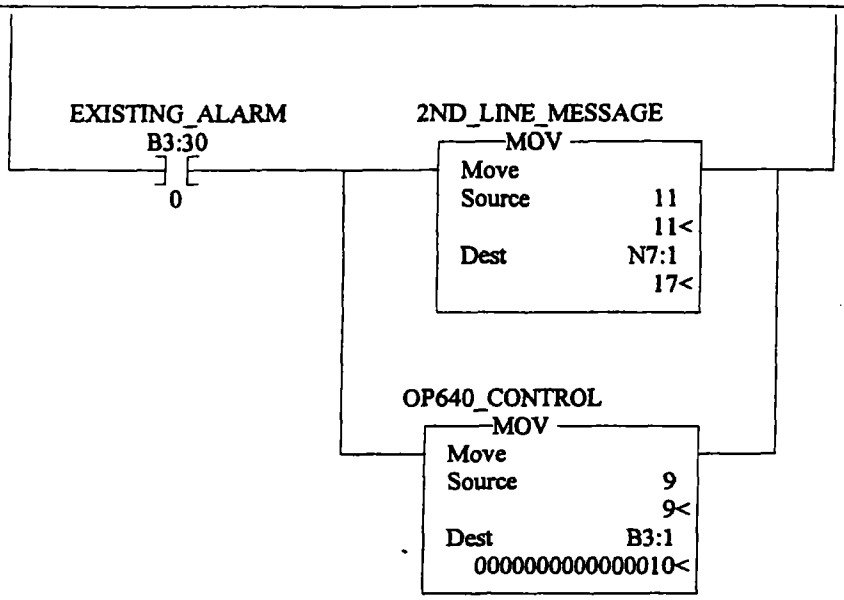

This is a alternating ON/OFF circuit - used to rotate messages. Not used in this version with Optimate 640.

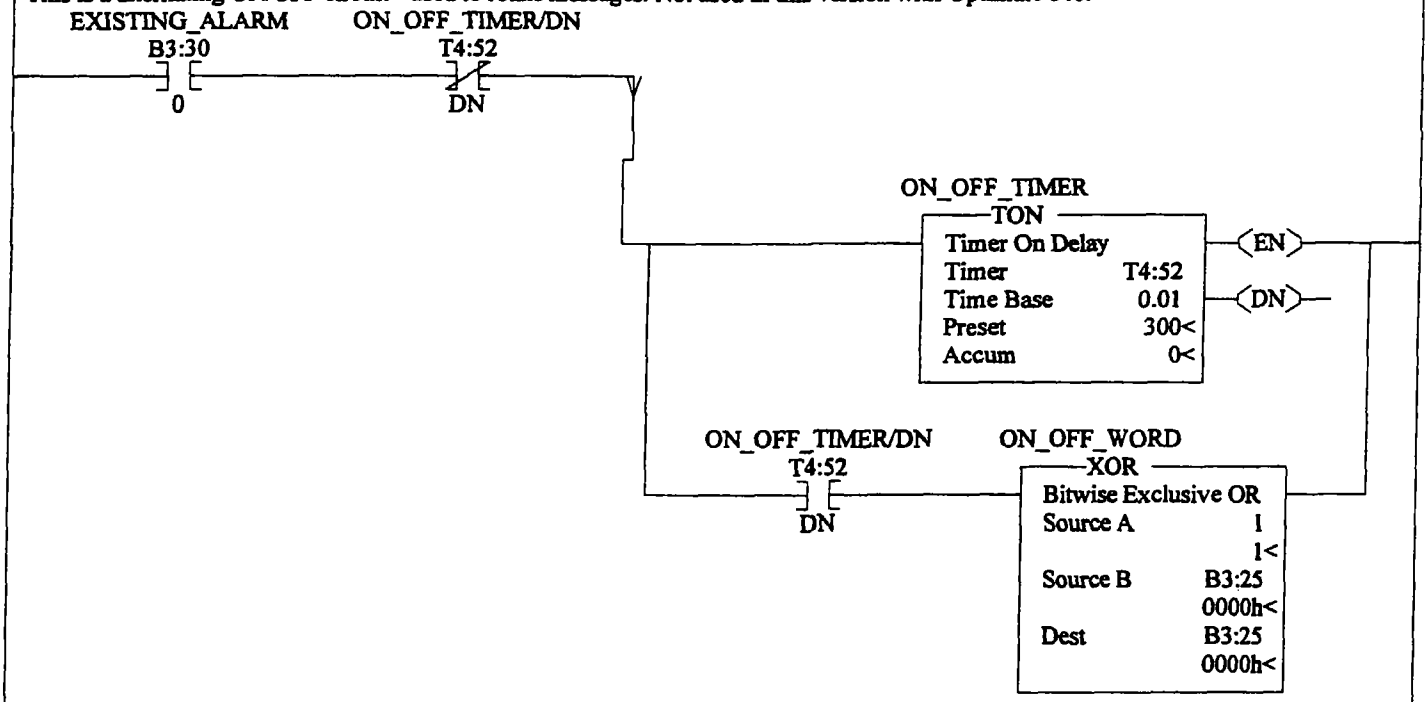

METER AND HELP DISPLAY TIMER

When the F4 or F5 keys are pushed a latch is set for a timed period to allow display of the requested information.

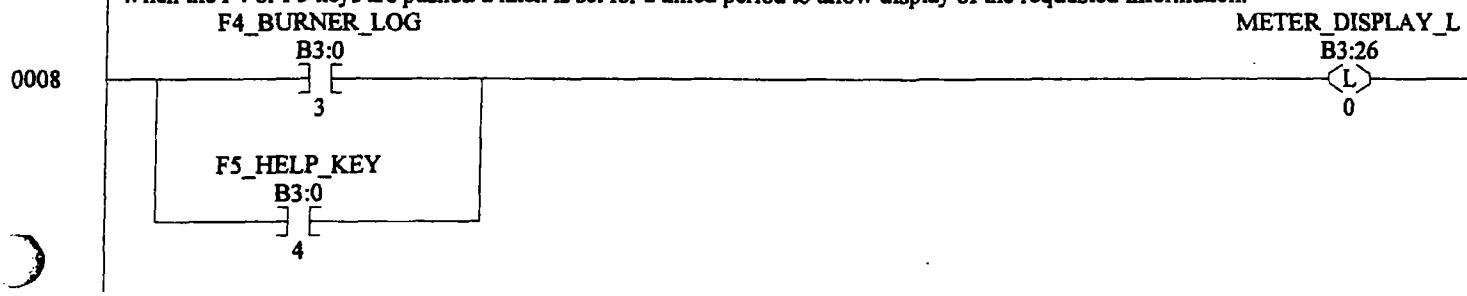

0009

METER_DISPLAY_L
B3:26
0

DISPLAY_TIMER
TON
Timer On Delay
Timer T4:39
Time Base 0.01
Preset 30<
Accum 0<
EN
DN

0010

DISPLAY_TIMER/DN
T4:39
DN

METER_DISPLAY_L
B3:26
U
0

0011

DISPLAY BURNER LOG
F4_BURNER_LOG
B3:0
3

1ST_LINE_MESSAGE
MOV
Move
Source 96
96<
Dest N7:0
8<

2ND_LINE_MESSAGE
MOV
Move
Source 97
97<
Dest N7:1
17<

1ST_LINE_DATA
MOV
Move
Source C5:1.ACC
0<
Dest N7:4
4<

2ND_LINE_DATA
MOV
Move
Source C5:2.ACC
4<
Dest N7:6
0<

0012

F5_HELP_KEY
B3:0
4

1ST_LINE_MESSAGE
MOV
Move
Source 20
20<
Dest N7:0
8<

2ND_LINE_MESSAGE
MOV
Move
Source 21
21<
Dest N7:1
17<

CONTROL
MOV
Move
Source B3:1
0000000000000010<
Dest N7:13
18<

0013

0014 (END)

Mode setting is stored in bits in word B3:31 :

Setup mode	B3:31/0 on	B3:31 = 1
Start mode	B3:31/1 on	B3:31 = 2
Run mode	B3:31/2 on	B3:31 = 4
Shutdown mode	B3:31/3 on	B3:31 = 8

Only one mode is allowed at any time.

The rung active only on FIRST PASS. It set the unit in SETUP MODE.
ESTOP will also put the system in SETUP MODE

The CLR command clear bit registers used to control internal system status and outputs.

0000

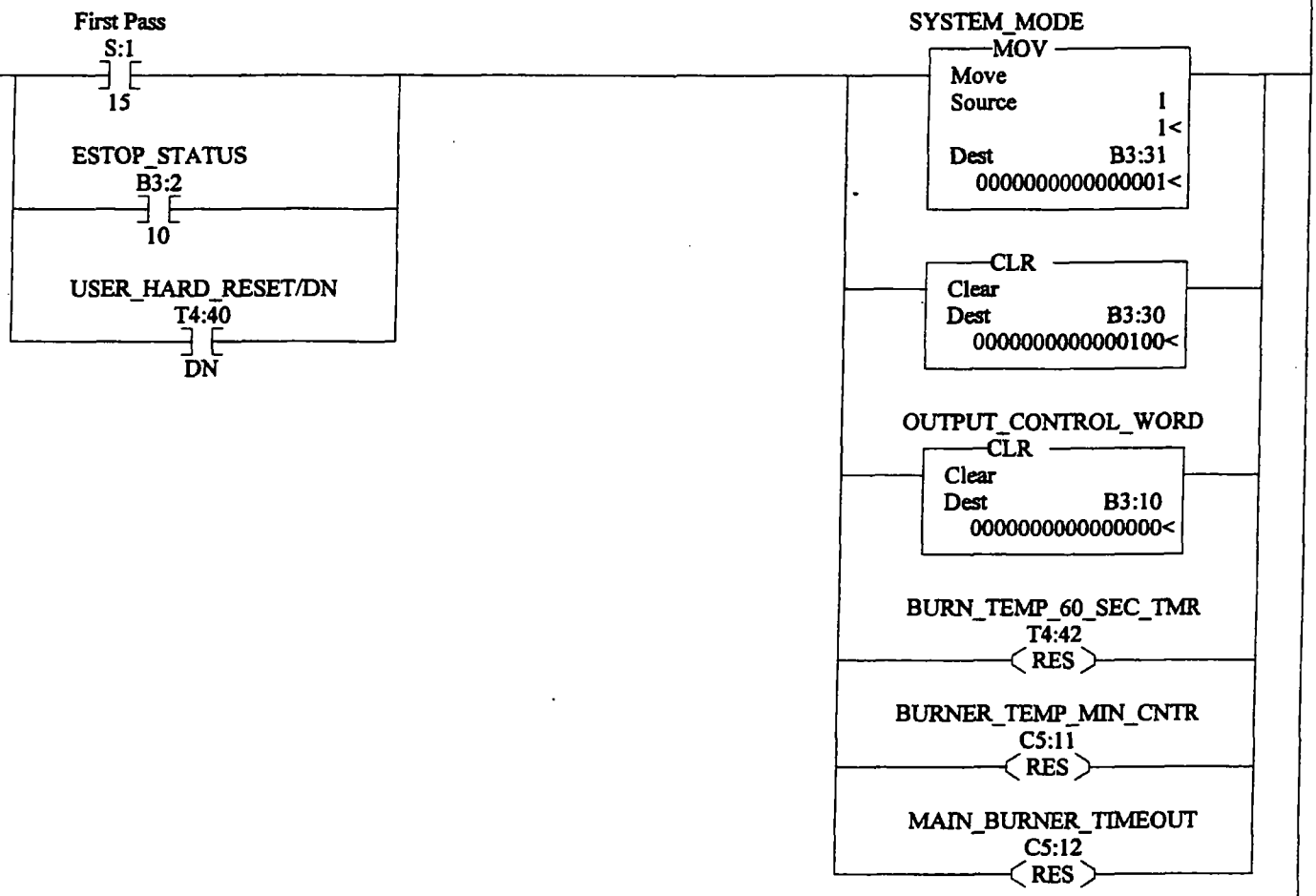

START AND STOP KEY FUNCTIONS:

Pushing the START key when setup conditions are satisfied enters the start mode.

0001

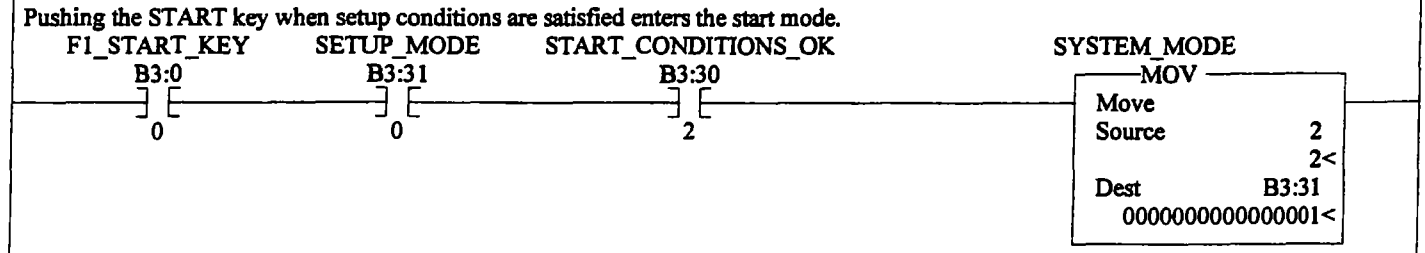

Press the STOP key anytime during run mode to enter shutdown mode.

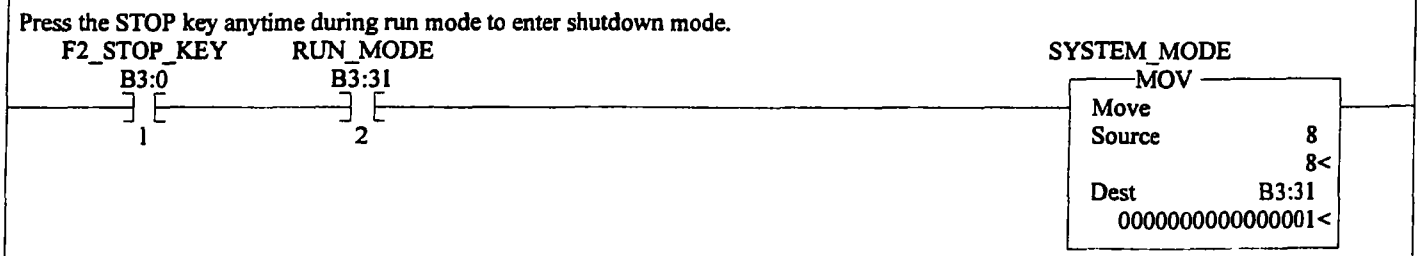

Push and hold the STOP key for 3 seconds to do a hard reset to setup mode.

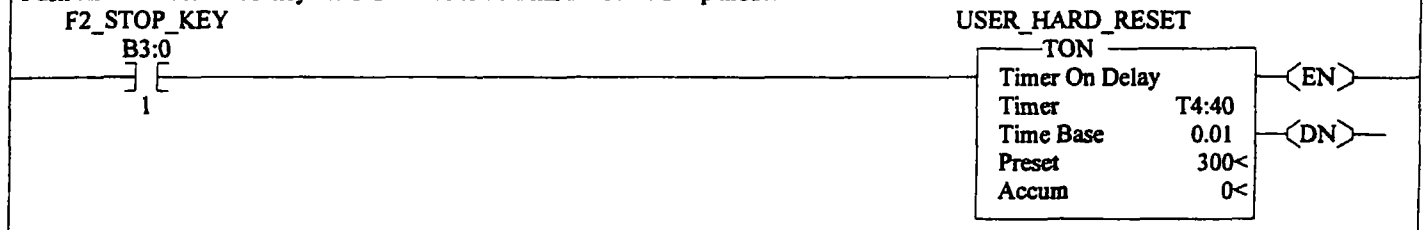

Pushing the STOP key during start mode will clear all outputs and boot the system back to setup mode.

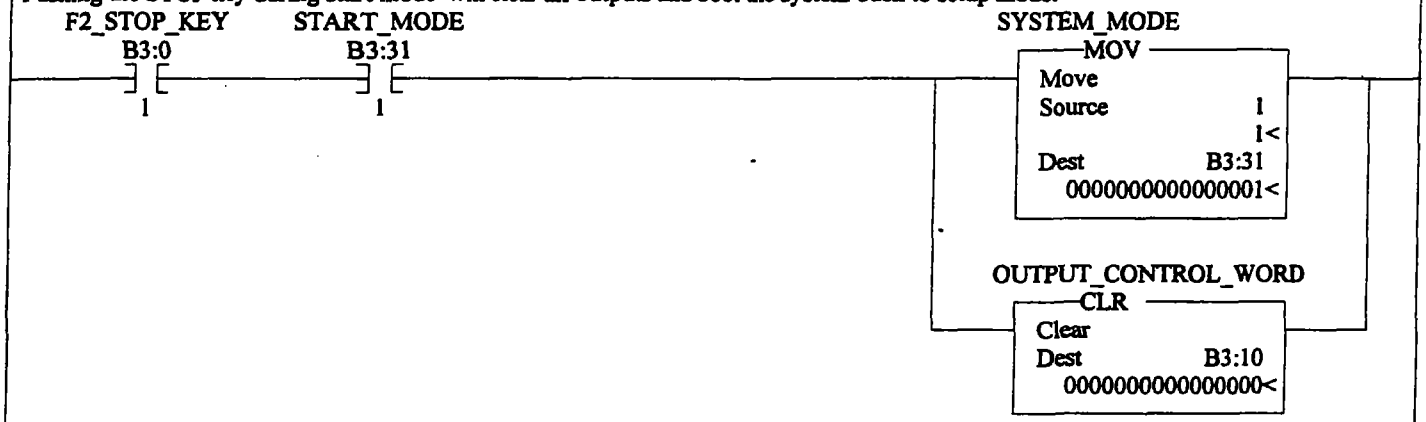

SETUP MODE:

All outputs are disabled in setup.

START STRING

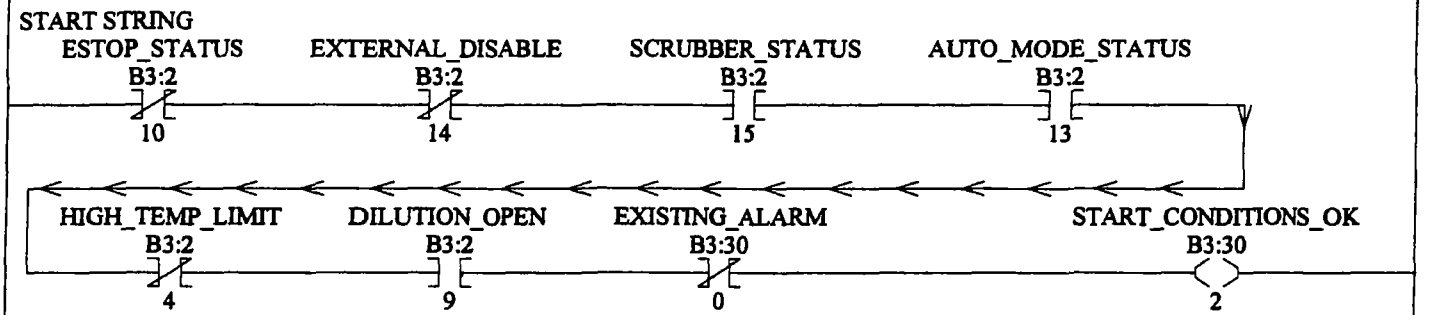

START MODE

Turn on the blowers and the flame enable relay and run the alarm enable relay.

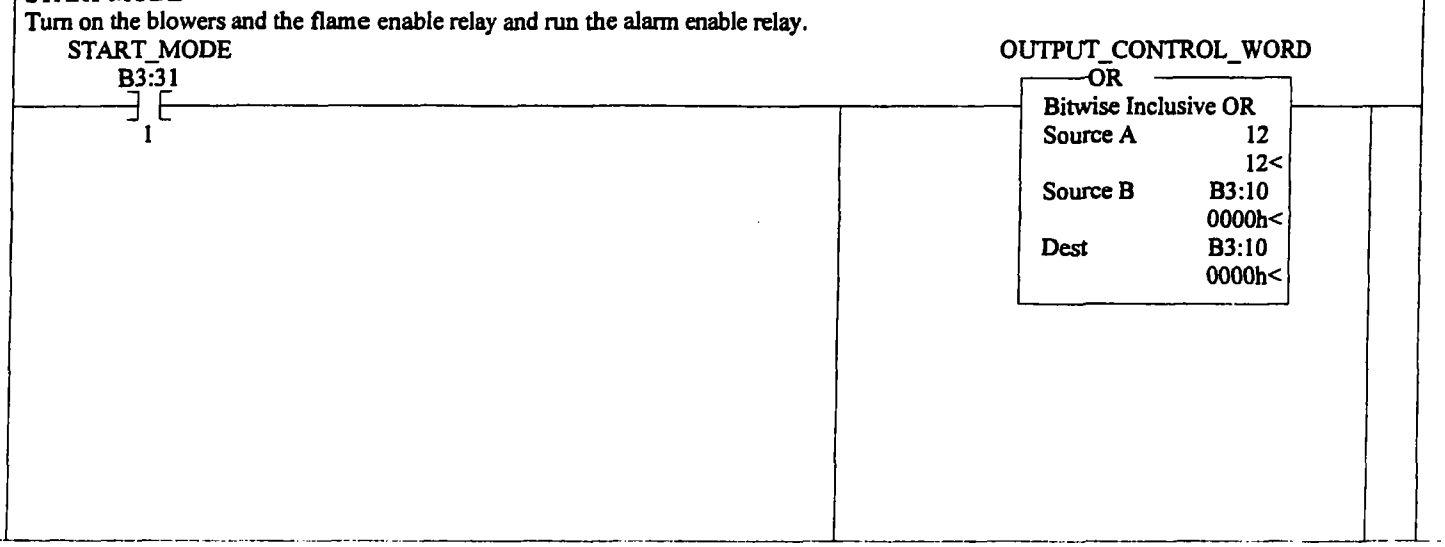

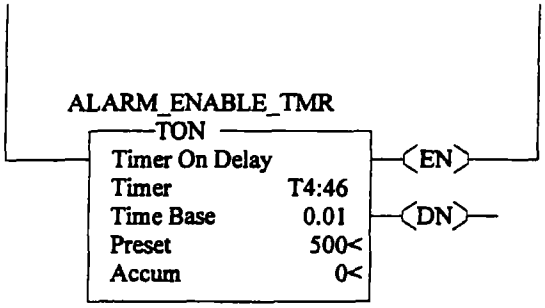

When the FSP String staus is OK at the output of the DUNGS - Start the pilot timer - set the pilot relay after 60 seconds.

0008

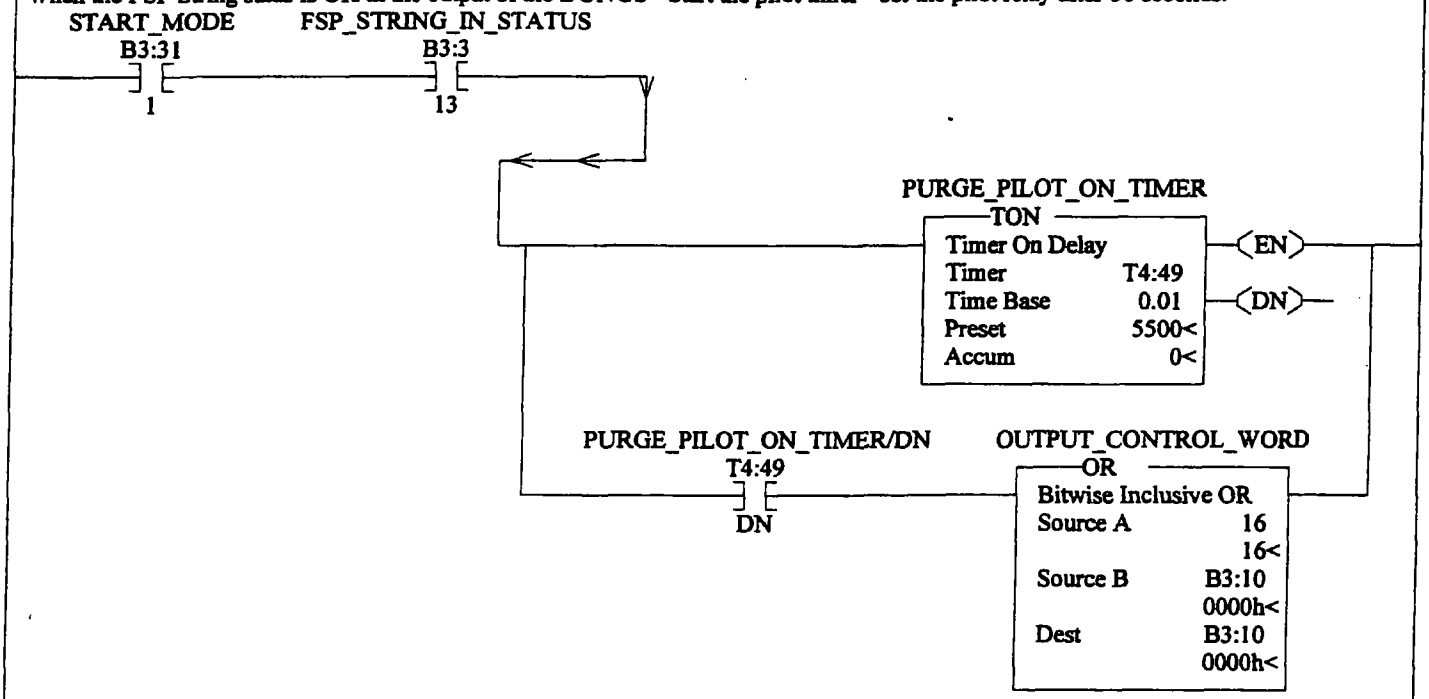

This is a timeout on the Flame start process - if not completed in 2 minutes something is wrong.

0009

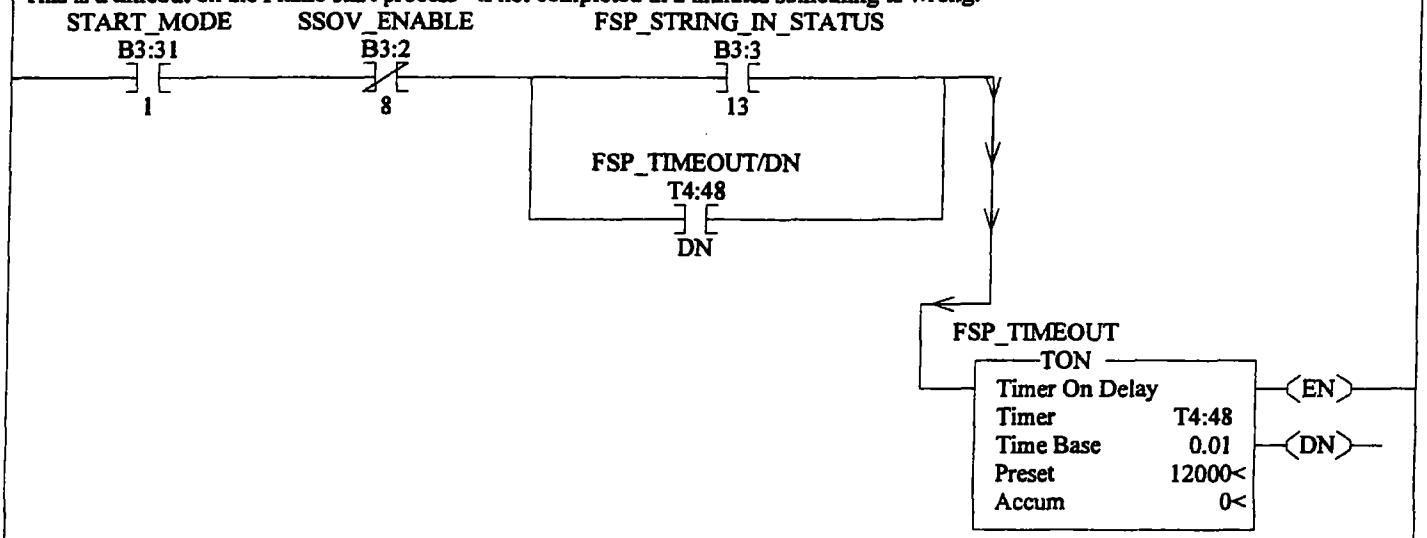

A START Fault has been detected - Switch to setup, clear the outputs and set the start error bit

FSP_TIMEOUT/DN
T4:48
DN

OUTPUT_CONTROL_WORD
CLR
Clear
Dest B3:10
0000000000000000<

SYSTEM_MODE
MOV
Move
Source 1
1<
Dest B3:31
0000000000000001<

START_ERROR
B3:30
7

RUN MODE RUNGS
Run mode is activated when the flame safety enables the SSOV (gas selenoid safety valves).
The CAT temp must stabilize.
The Dilutin/Process is enabled.
External equipment is enabled after the Dilution/Process valves have had time to open.
The system is now running under normal conditions.

This rung enables the burner and set Oxidizer running status to the scrubber, Run mode is also set

START_MODE
B3:31
1

SSOV_ENABLE
B3:2
8

SYSTEM_MODE
MOV
Move
Source 4
4<
Dest B3:31
0000000000000001<

OUTPUT_CONTROL_WORD
OR
Bitwise Inclusive OR
Source A 130
130<
Source B B3:10
0000h<
Dest B3:10
0000h<

This rung uses a minute counter to let temp stabilize.

0012

RUN_MODE
B3:31
2

BURNER_LOOP_ENABLE
B3:10
1

BURNER_UP_TO_TEMP
B3:2
7

BURN_TEMP_60_SEC_TMR/DN
T4:42
DN

BURN_TEMP_60_SEC_TMR
RTO
Retentive Timer On
Timer T4:42
Time Base 0.01
Preset 6000<
Accum 0<
EN
DN

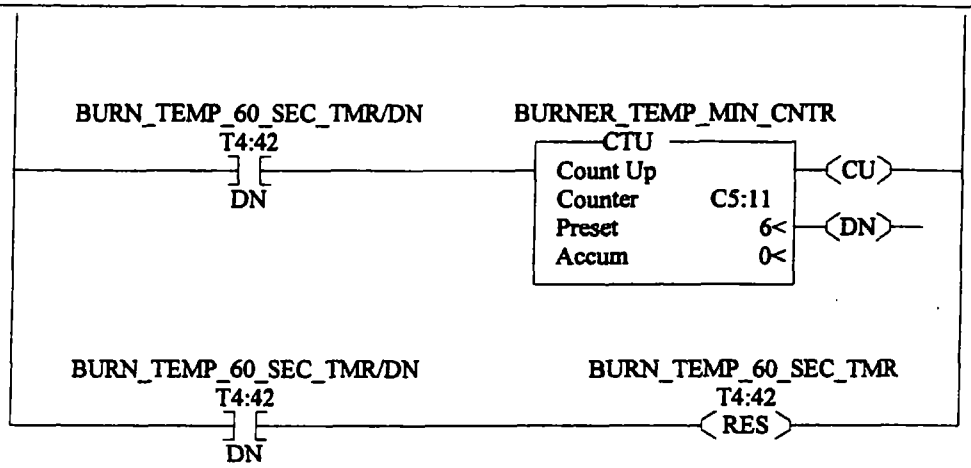

When the temp has stabilized turn on the process/dilution enable. This will start the closing of the dilution valve and opening of the process valve. After a time delay after the closing of the dilution valve has been detected, enable the process machine.

0013

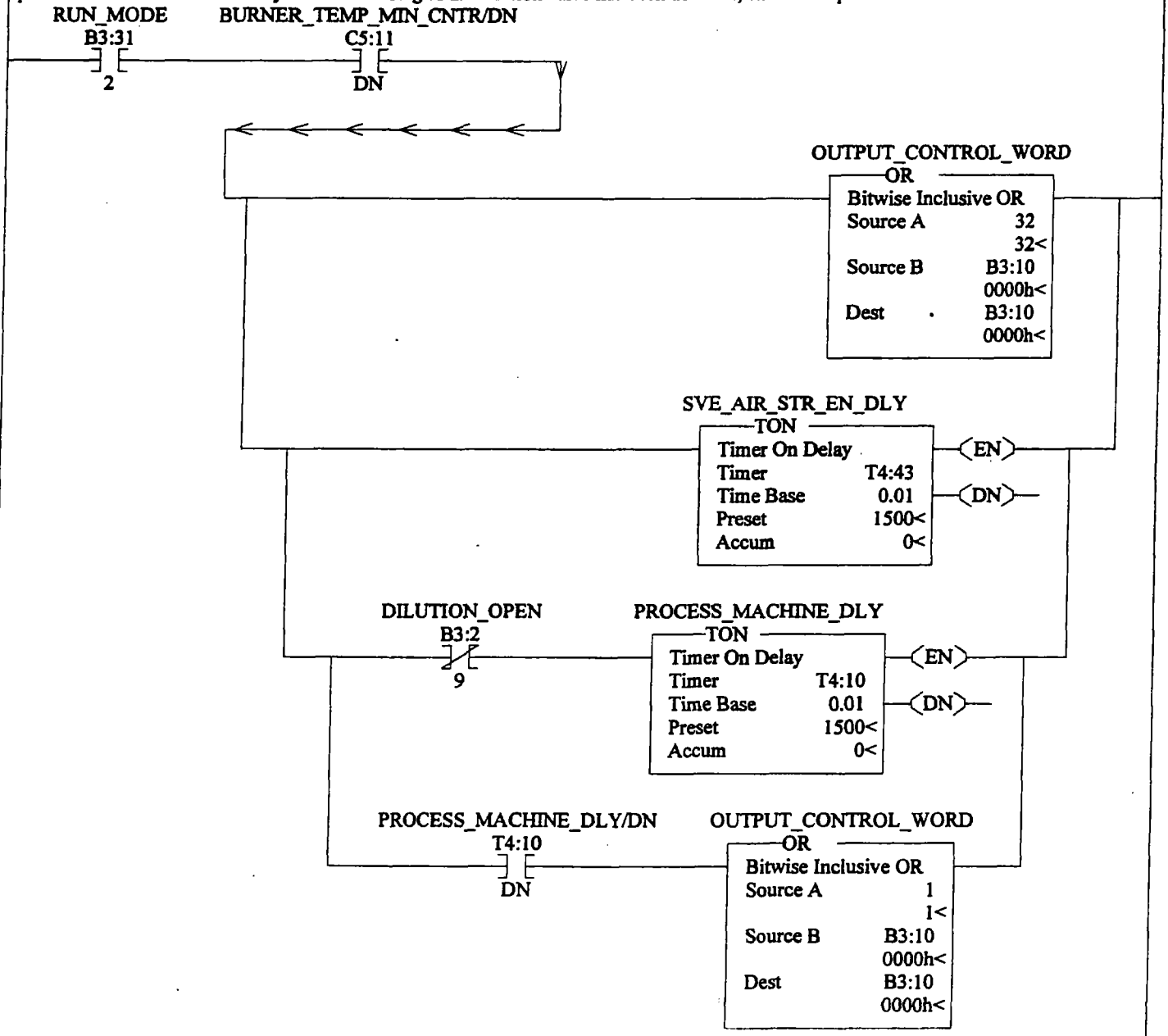

With the SVE/Air Stripper Delay satisfied - set the "SVE" and "Air Stripper" enables

RUN_MODE B3:31 2 — SVE_AIR_STR_EN_DLY/DN T4:43 DN — OUTPUT_CONTROL_WORD OR

Bitwise Inclusive OR
Source A 576 576<
Source B B3:10 0000h<
Dest B3:10 0000h<

This is a main timeout alarm - if the burner does not reach temp within time specified then - ALARM.

0015 RUN_MODE B3:31 2 — BURNER_LOOP_ENABLE B3:10 1 — BURNER_UP_TO_TEMP B3:2 7

BURNER_TIMEOUT/DN T4:51 DN — BURNER_TIMEOUT RTO

Retentive Timer On
Timer T4:51
Time Base 0.01
Preset 6000<
Accum 5149<
(EN) (DN)

BURNER_TIMEOUT/DN T4:51 DN — MAIN_BURNER_TIMEOUT CTU

Count Up
Counter C5:12
Preset 30<
Accum 0<
(CU) (DN)

BURNER_TIMEOUT/DN T4:51 DN — BURNER_TIMEOUT T4:51 (RES)

0016 RUN_MODE B3:31 2 — BURNER_LOOP_ENABLE B3:10 1 — BURNER_UP_TO_TEMP B3:2 7 — MAIN_BURNER_TIMEOUT C5:12 (RES)

SHUTDOWN MODE

Sequence: A) open dilution, B) kill flame, C) purge/cool, D) kill blowers.
The external system input enables are opened immediately and the scrubber will see a timed shutdown after the blowers are off.

Disable all outputs except: burner enable, flame enable, start blowers, and pilot enable. This leaves flame on and blowers running until dilution is opened.

When the dilution timer is done - kill all except the blowers.

0017 SHUTDOWN_MODE B3:31 3 — OUTPUT_CONTROL_WORD AND

Bitwise AND
Source A 62 62<
Source B B3:10 0000h<
Dest B3:10 0000h<

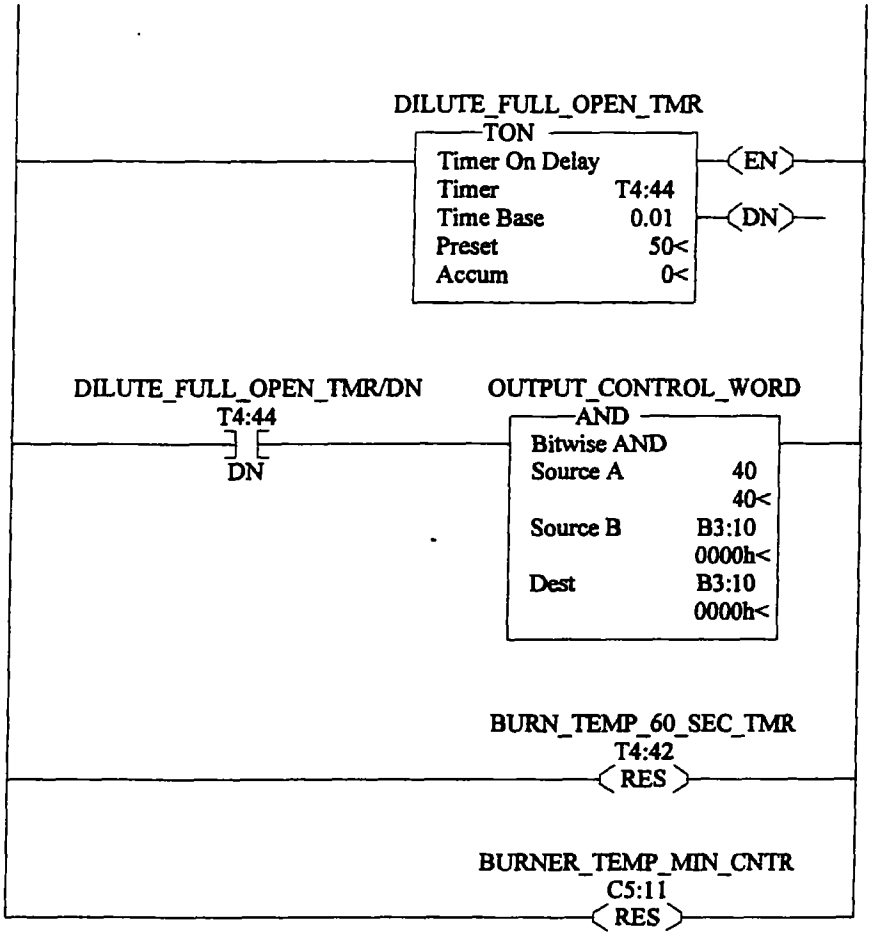

Cool down oxidizer by keeping the blowers on with flame off.
Adjust the counter value to get number of minutes required.
After "cool down" shut off blowers and disable scrubber.

0018

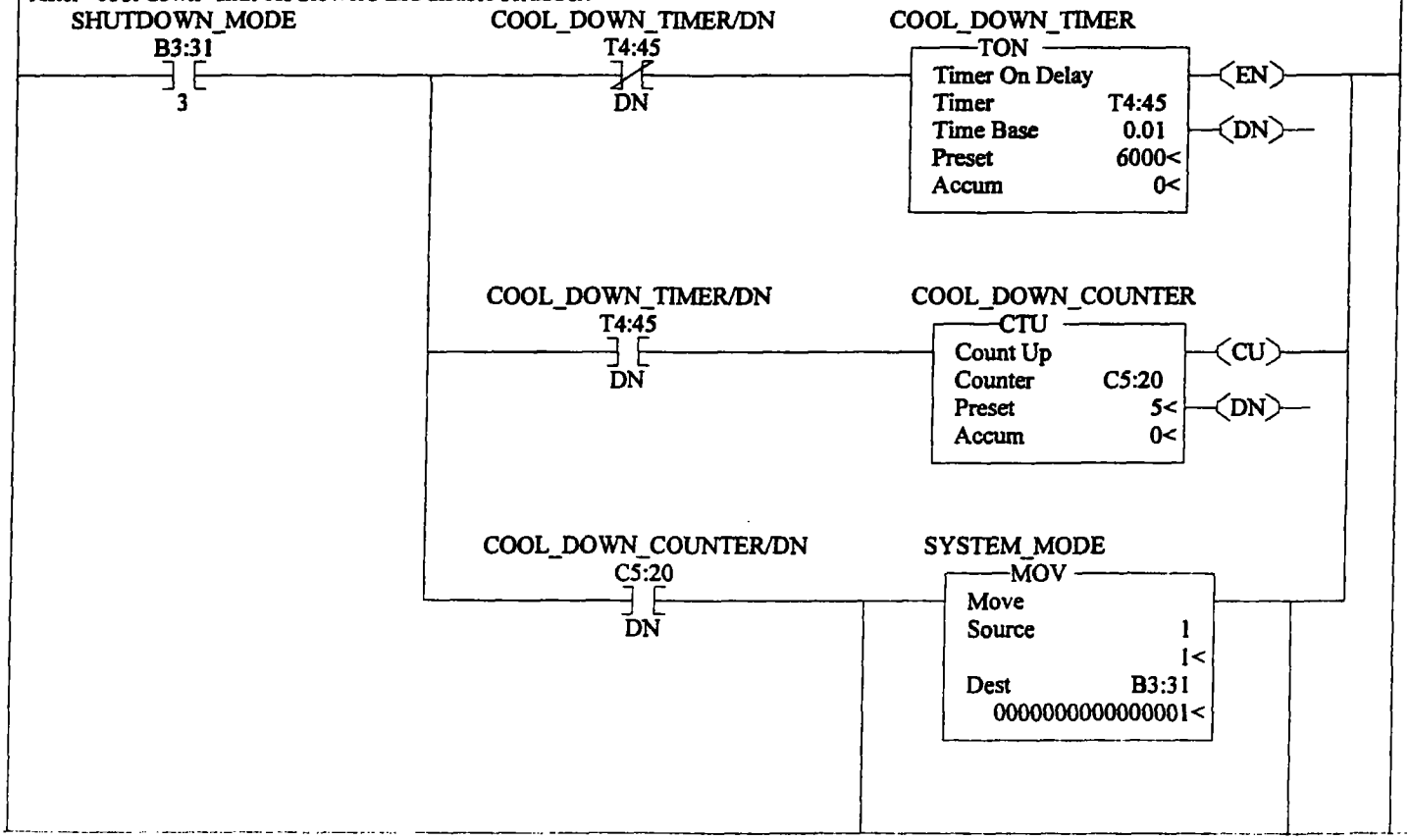

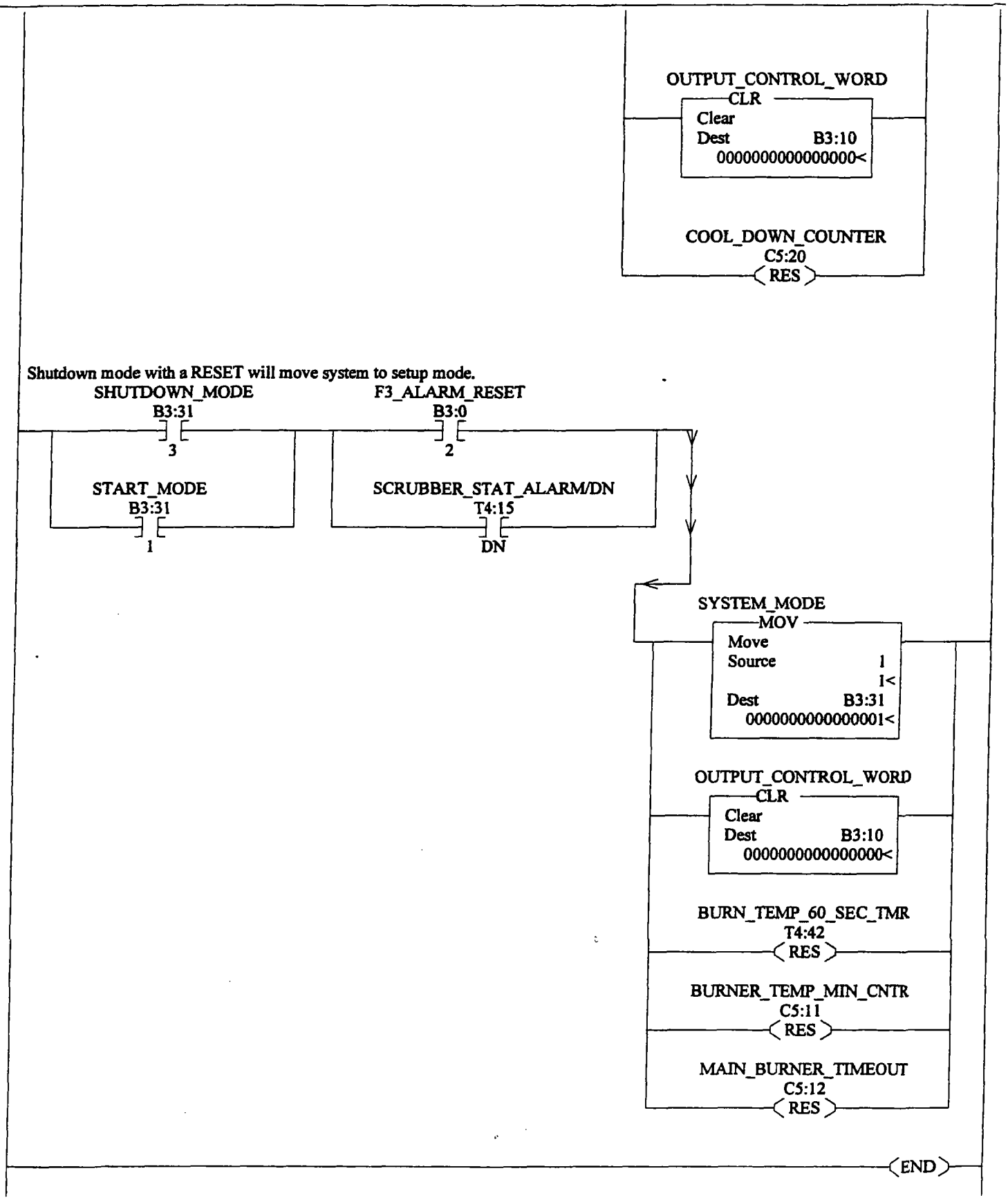
OUTPUT_CONTROL_WORD
CLR
Clear
Dest B3:10
0000000000000000<
COOL_DOWN_COUNTER
C5:20
RES
Shutdown mode with a RESET will move system to setup mode.
SHUTDOWN_MODE
B3:31
3
F3_ALARM_RESET
B3:0
2
0019
START_MODE
B3:31
1
SCRUBBER_STAT_ALARM/DN
T4:15
DN
SYSTEM_MODE
MOV
Move
Source 1
1<
Dest B3:31
0000000000000001<
OUTPUT_CONTROL_WORD
CLR
Clear
Dest B3:10
0000000000000000<
BURN_TEMP_60_SEC_TMR
T4:42
RES
BURNER_TEMP_MIN_CNTR
C5:11
RES
MAIN_BURNER_TIMEOUT
C5:12
RES
0020
END

ALARM ENABLE

This rung determines if the system status is such that an alarm can occur. No alarms are possible unless these conditions are met - must be started or running.

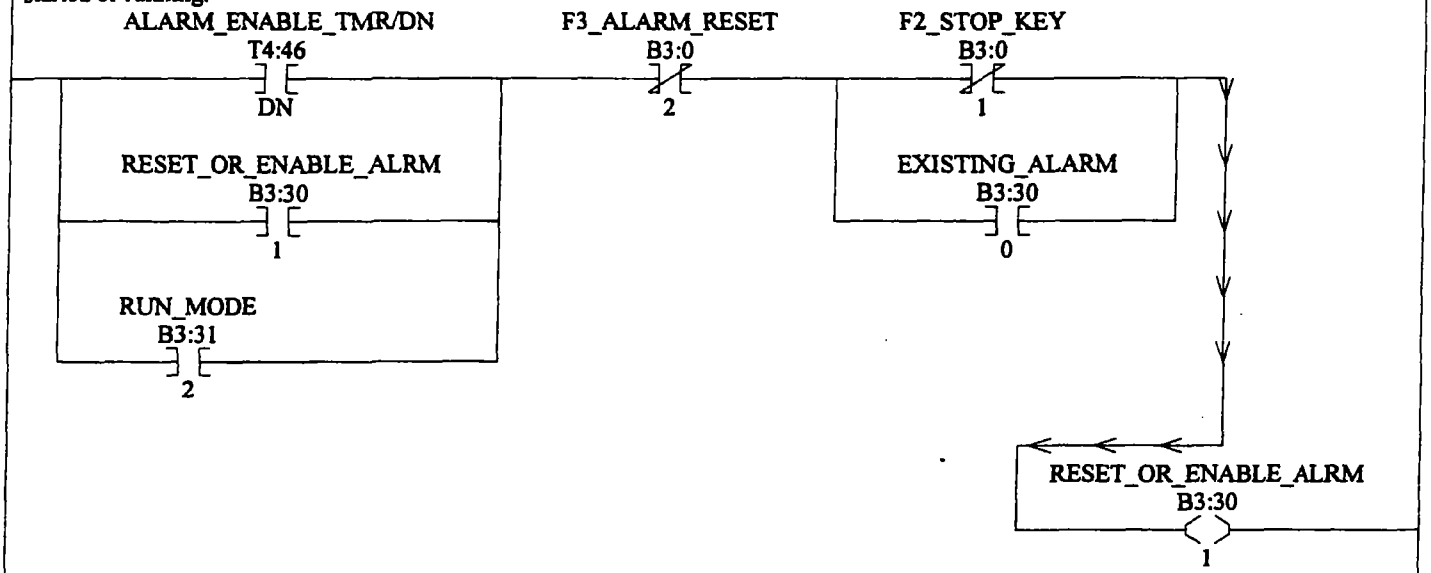

The following are input/alarm delay timers. each input has a timer associated with it. We do this even if it is not used (set to zero). this is done to keep track of and hold a place for timer additions/modifications. There are exceptions, Auto mode, ESTOP.

Any alarm timer associated with a STRING is set to a time slightly greater than the previous string alarm, This will at least give the correct larm on a reset or power up.

Flame arrest is part of the flame safety string.

0001

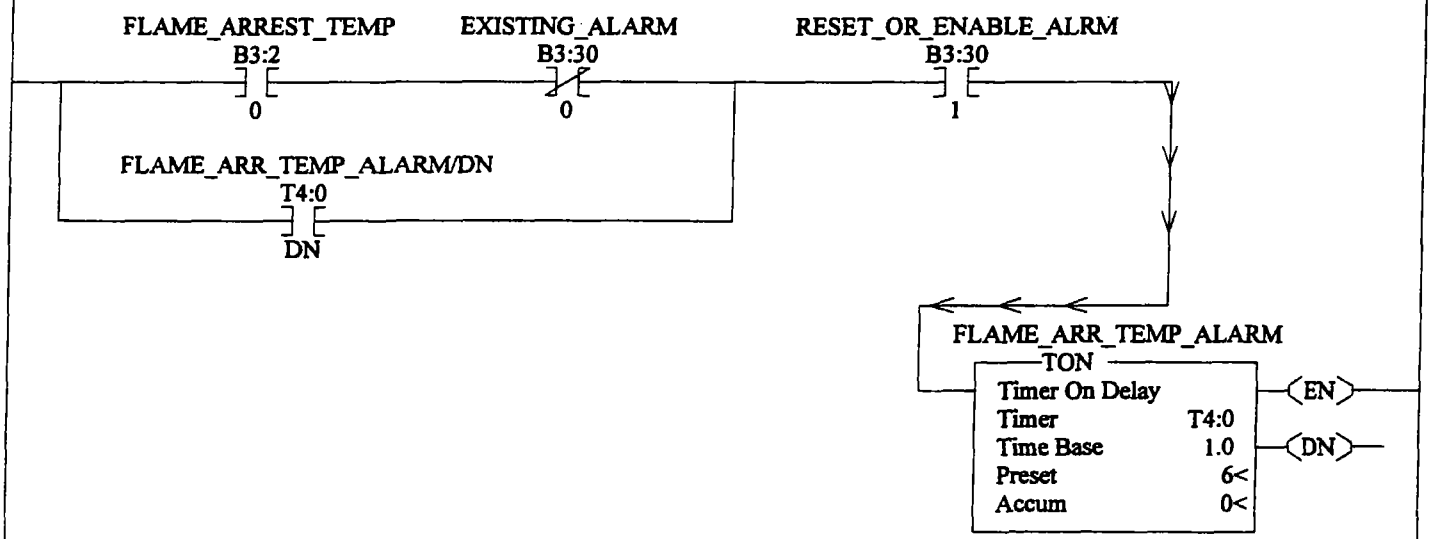

High Gas Pressure is part of the flame safety string.

0002

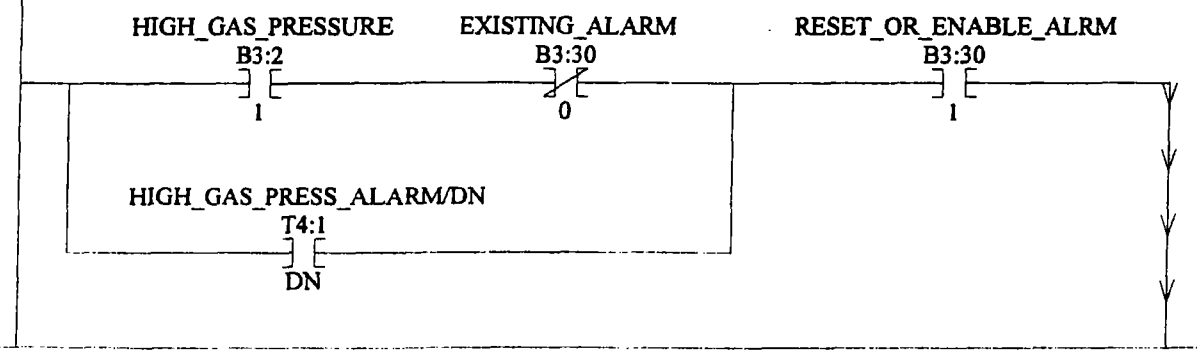

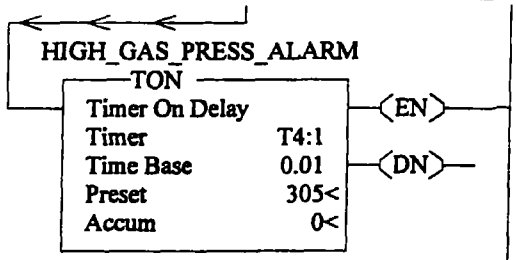

Low Gas Pressure is part of the flame safety string.

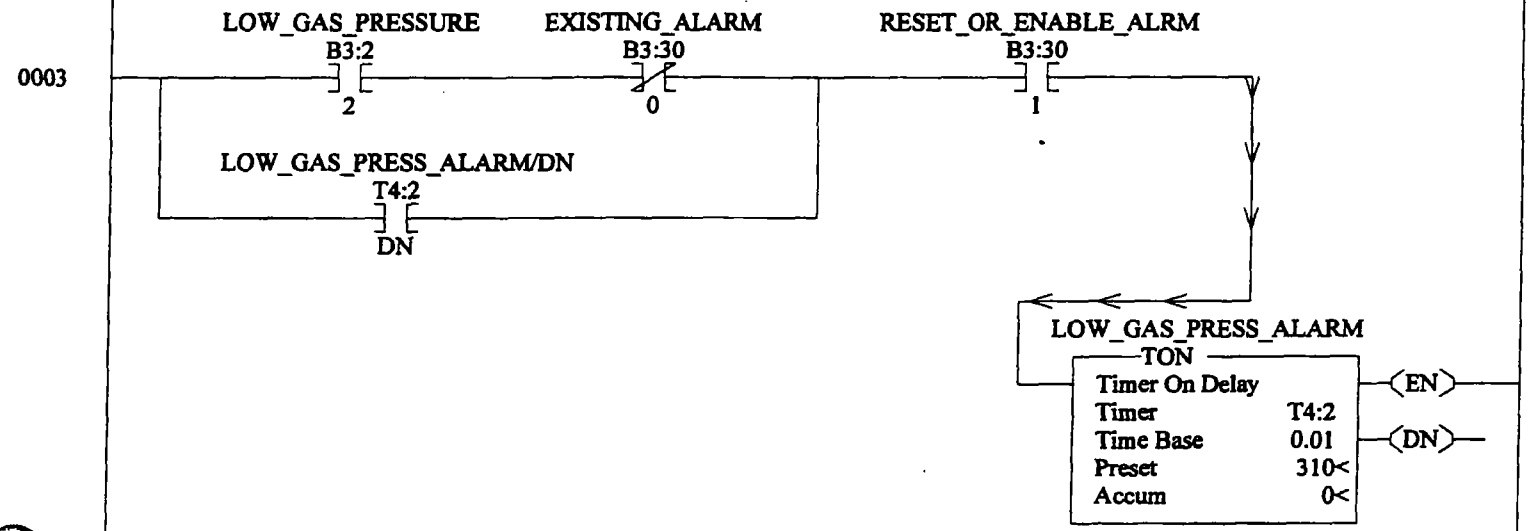

Modulating gas valve proved closed is part of the flame safety string.

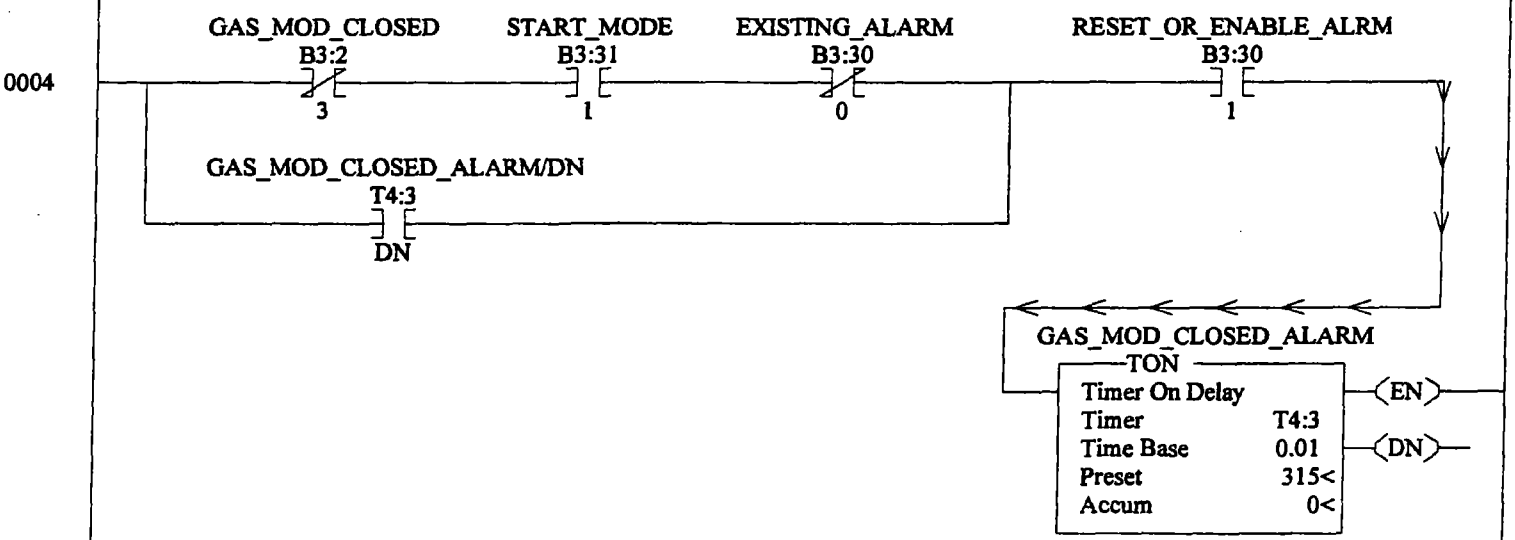

High Temp limit (catalyst exit) is part of the flame safety string.

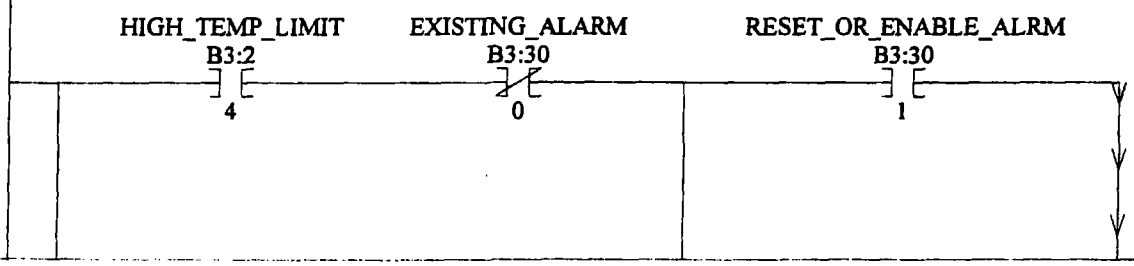

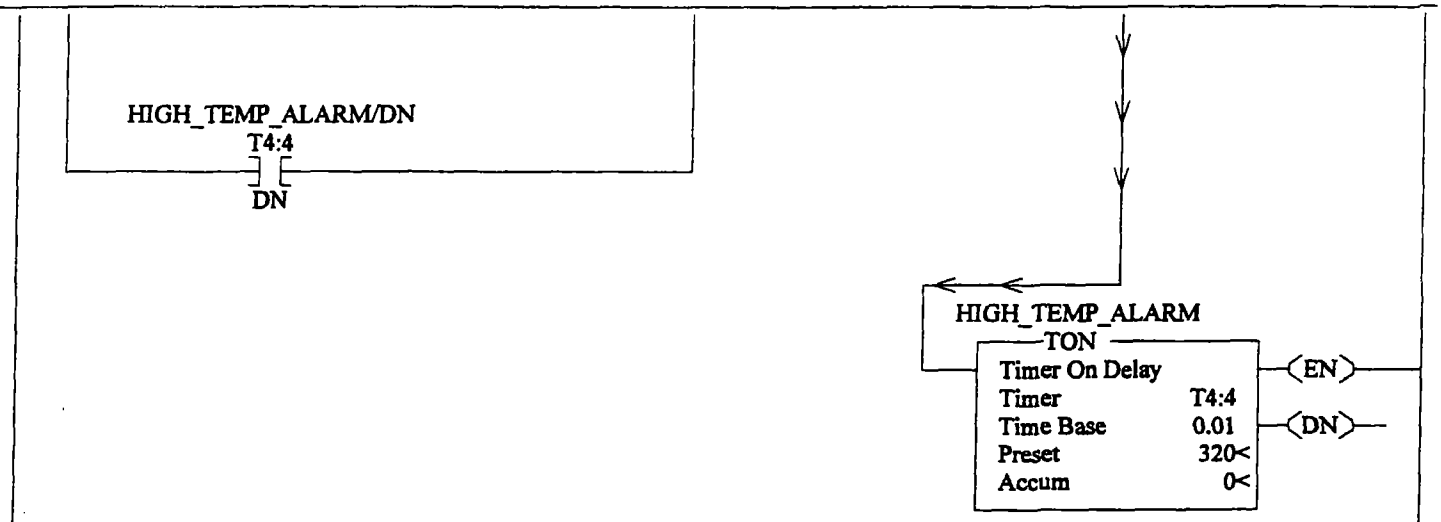

Catalyst center temperature high

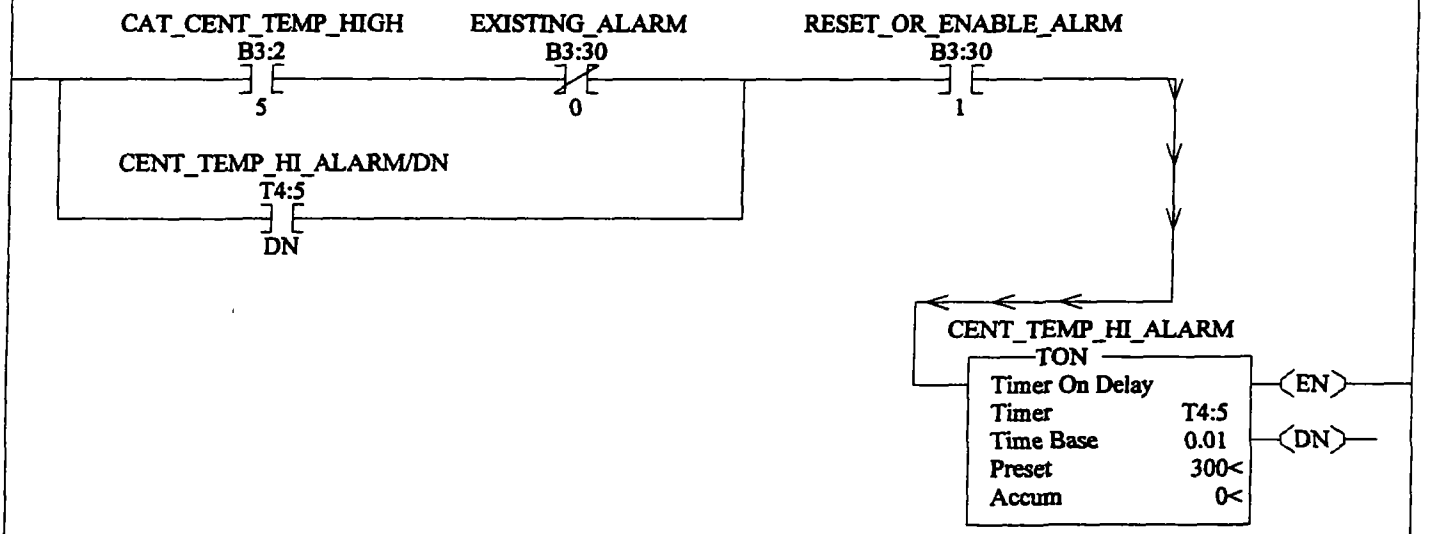

Flame safeguard alarm - actualy requires no time delay, set to 1 second - if this goes high the flame will shutdown.

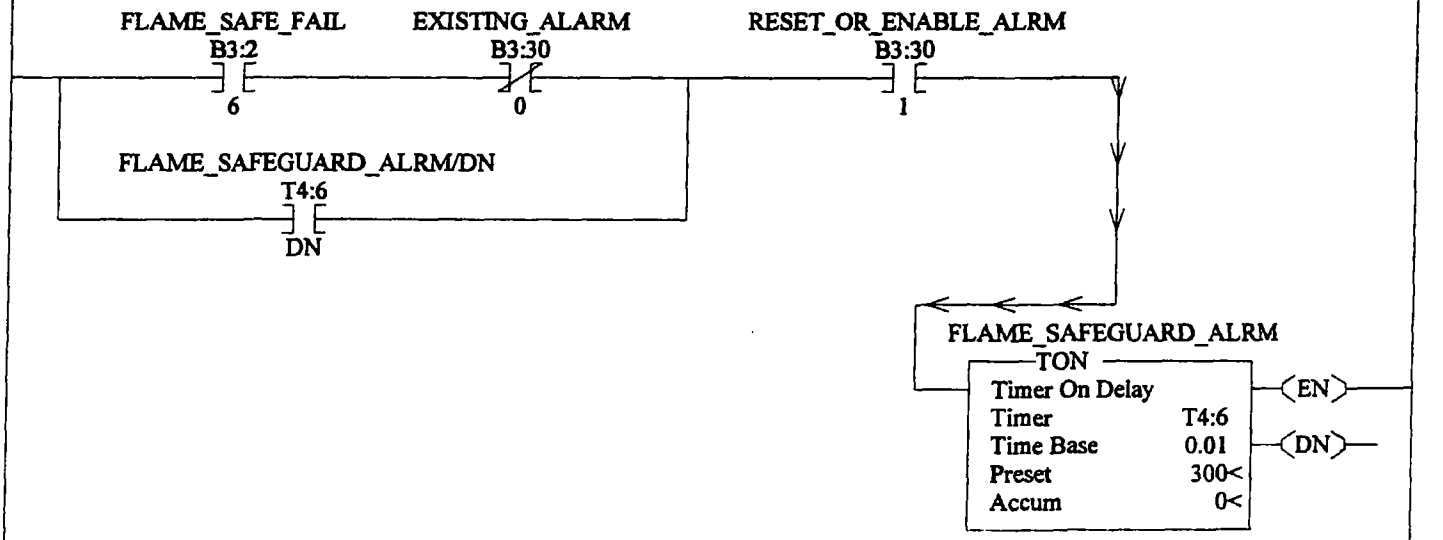

Burner up to temp signal - event from honeywell controller

BURNER_UP_TO_TEMP B3:2 / 7 — RESET_OR_ENABLE_ALRM B3:30 / 1 — BURNER_TO_TEMP_TMR TON

Timer On Delay	
Timer	T4:7
Time Base	0.01
Preset	6000<
Accum	0<

EN / DN

Burner on signal is not an alarm and does not require delay on this system - it is set to 1 second.....

0009 SSOV_ENABLE B3:2 / 8 — RESET_OR_ENABLE_ALRM B3:30 / 1 — SSOV_ON_DLY TON

Timer On Delay	
Timer	T4:8
Time Base	0.01
Preset	300<
Accum	0<

EN / DN

Dilution valve fully open signal uses delay to ensure contact state - due to its form of use it is ussually not a problem.

0010 DILUTION_OPEN B3:2 / 9 — RESET_OR_ENABLE_ALRM B3:30 / 1 — DILUT_VALVE_OPEN_DLY TON

Timer On Delay	
Timer	T4:9
Time Base	0.01
Preset	300<
Accum	0<

EN / DN

Flames safety blower enable signal - no delay required for this system - so it is set to 1 sec

0011 FSP_START_BLOWER B3:2 / 11 — RESET_OR_ENABLE_ALRM B3:30 / 1 — FSP_BLOWER_DELAY TON

Timer On Delay	
Timer	T4:11
Time Base	0.01
Preset	300<
Accum	0<

EN / DN

Flame safety start string is OK? this also requires no delay for this system - set to 1 sec.

0012 FSP_START_STRING B3:2 / 12 — RESET_OR_ENABLE_ALRM B3:30 / 1 — START_STRING_DLY TON

Timer On Delay	
Timer	T4:12
Time Base	0.01
Preset	300<
Accum	0<

EN / DN

AUTO_MODE_STATUS B3:2 / 13 — EXISTING_ALARM B3:30 / 0 — RESET_OR_ENABLE_ALRM B3:30 / 1

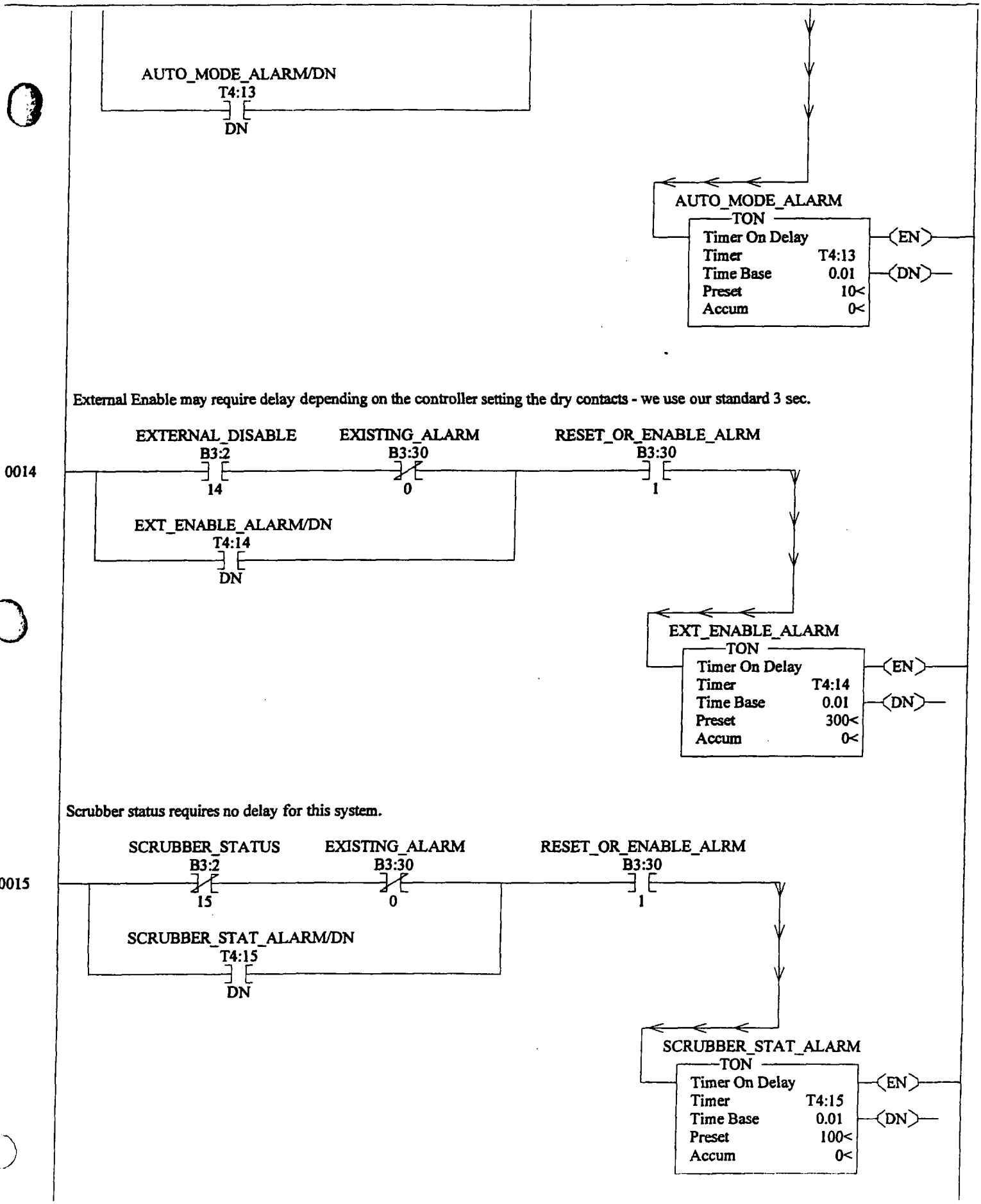
AUTO_MODE_ALARM/DN
T4:13
DN
AUTO_MODE_ALARM
TON
Timer On Delay
Timer T4:13
Time Base 0.01
Preset 10<
Accum 0<
EN
DN
External Enable may require delay depending on the controller setting the dry contacts - we use our standard 3 sec.
0014
EXTERNAL_DISABLE
B3:2
14
EXISTING_ALARM
B3:30
0
RESET_OR_ENABLE_ALRM
B3:30
1
EXT_ENABLE_ALARM/DN
T4:14
DN
EXT_ENABLE_ALARM
TON
Timer On Delay
Timer T4:14
Time Base 0.01
Preset 300<
Accum 0<
EN
DN
Scrubber status requires no delay for this system.
0015
SCRUBBER_STATUS
B3:2
15
EXISTING_ALARM
B3:30
0
RESET_OR_ENABLE_ALRM
B3:30
1
SCRUBBER_STAT_ALARM/DN
T4:15
DN
SCRUBBER_STAT_ALARM
TON
Timer On Delay
Timer T4:15
Time Base 0.01
Preset 100<
Accum 0<
EN
DN

Scrubber failure is a solid signal from a CAT system - delay not required for this system.

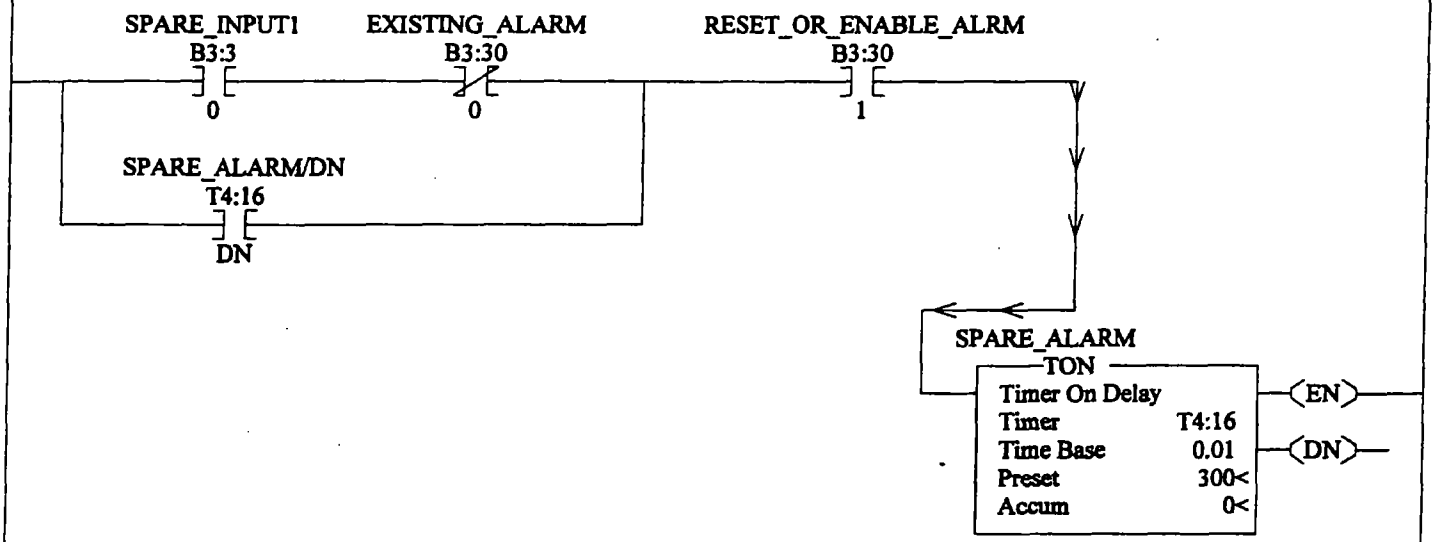

Catalyst Inlet low temperature indication, this is an alrm function. if the inlet temp is lower than set point for time specified the alarm condition is satisfied.

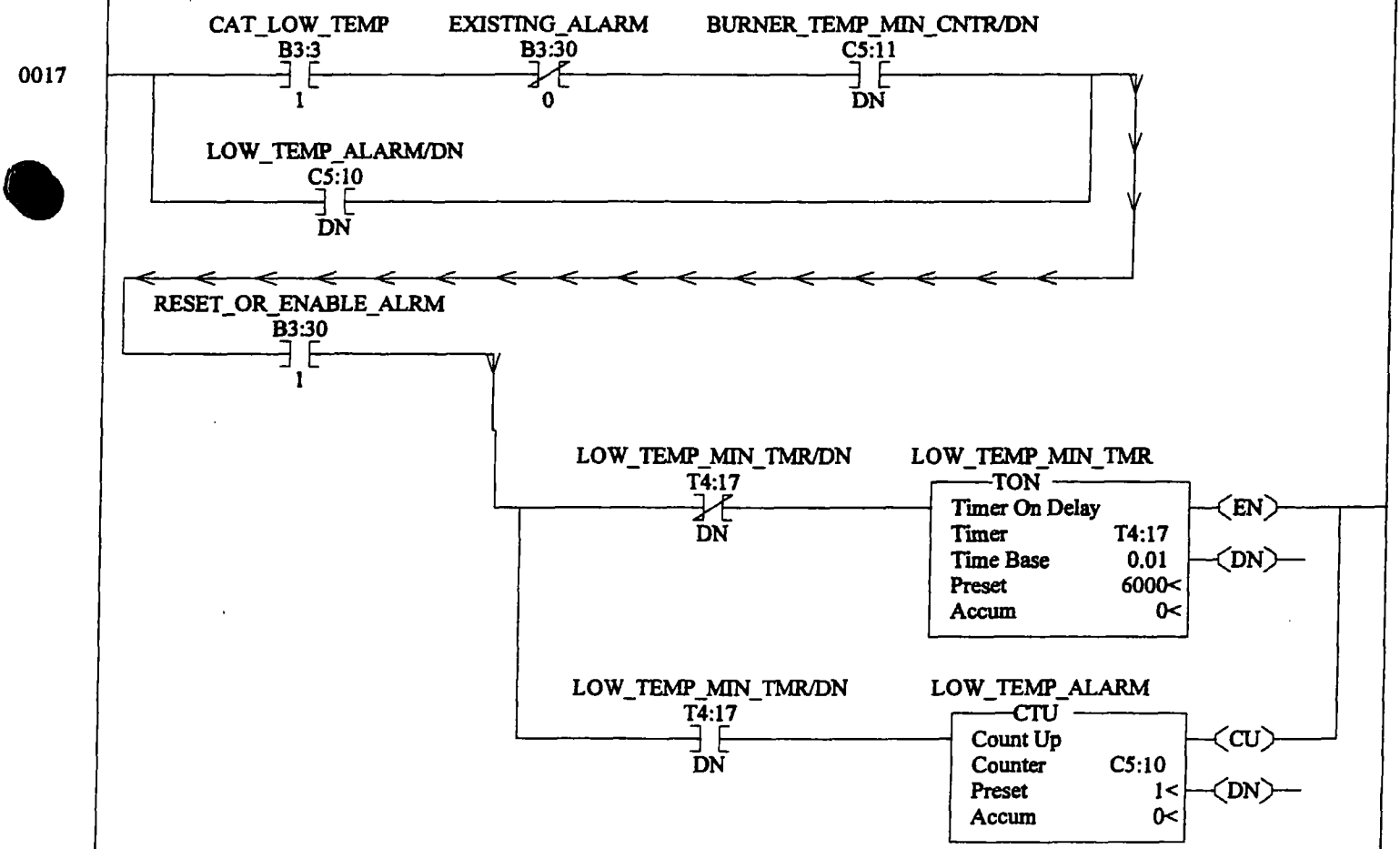

RES (reset) is required for this alarm counter

Combustion Air Blower Overload - no delay required.

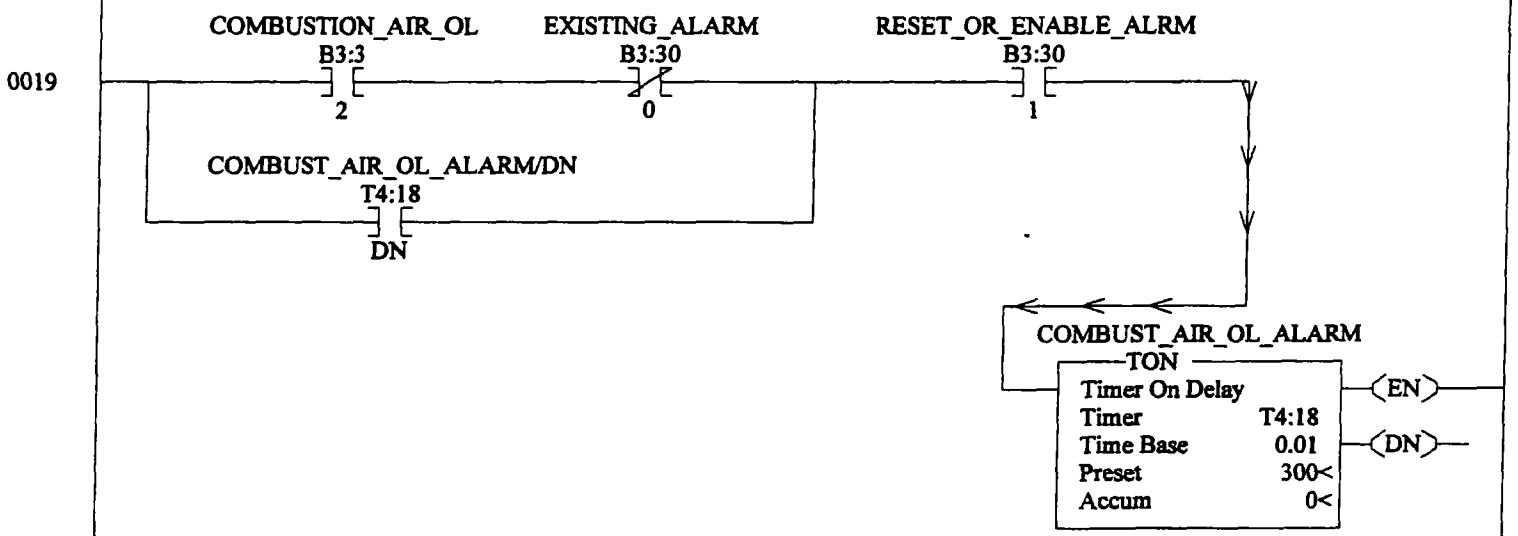

Process Blower Overload - no delay required.

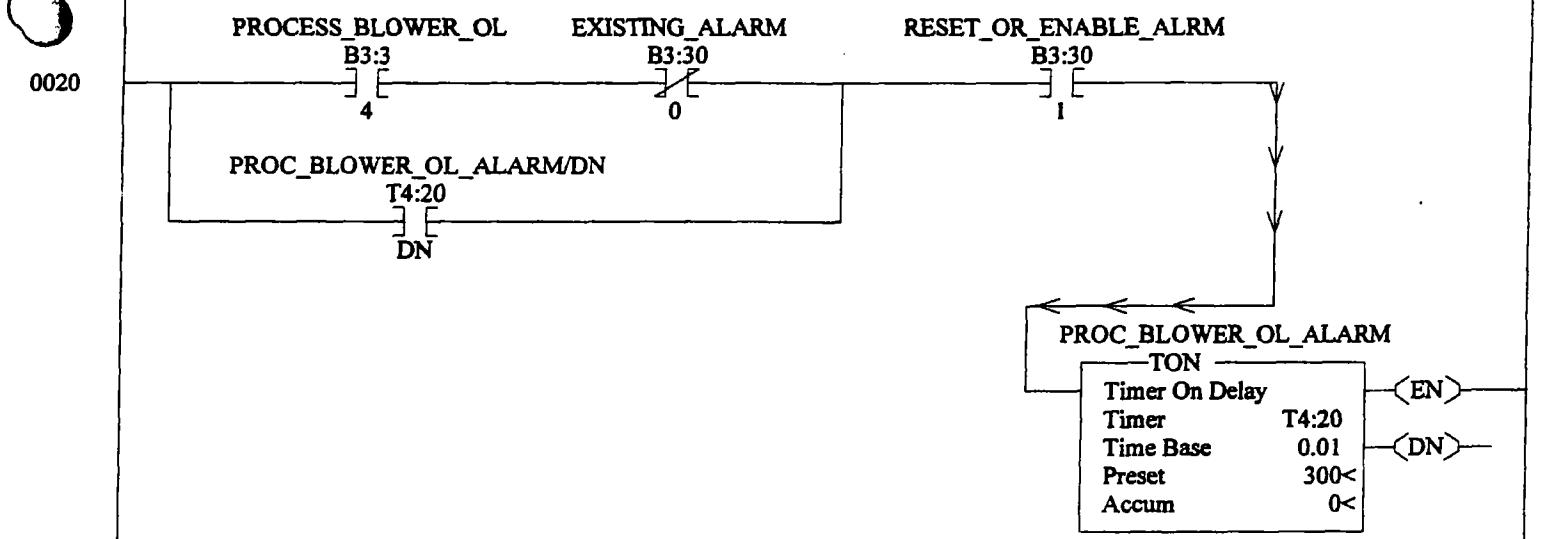

Process airflow low alarm is part a string - timer values offset to catch first alarm.
(string includes combustion airflow , differential pressure and low flow).

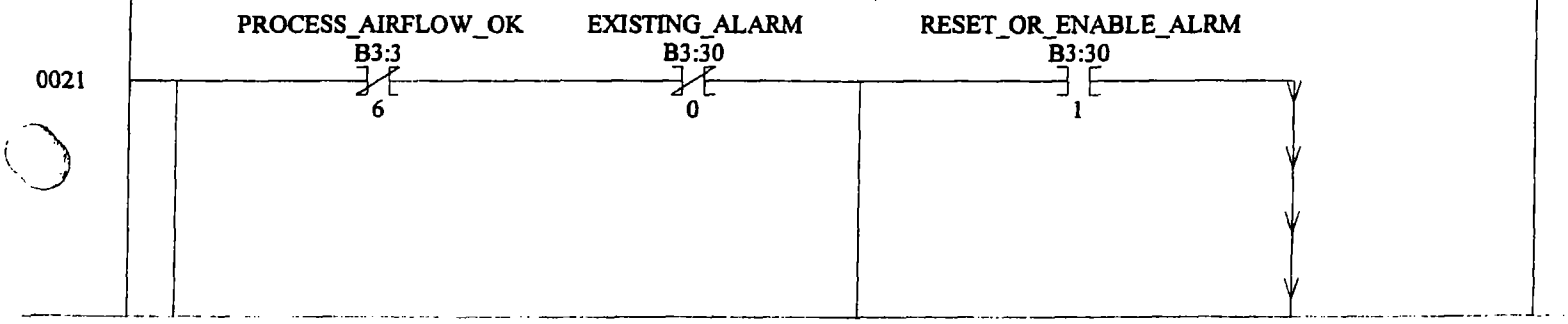

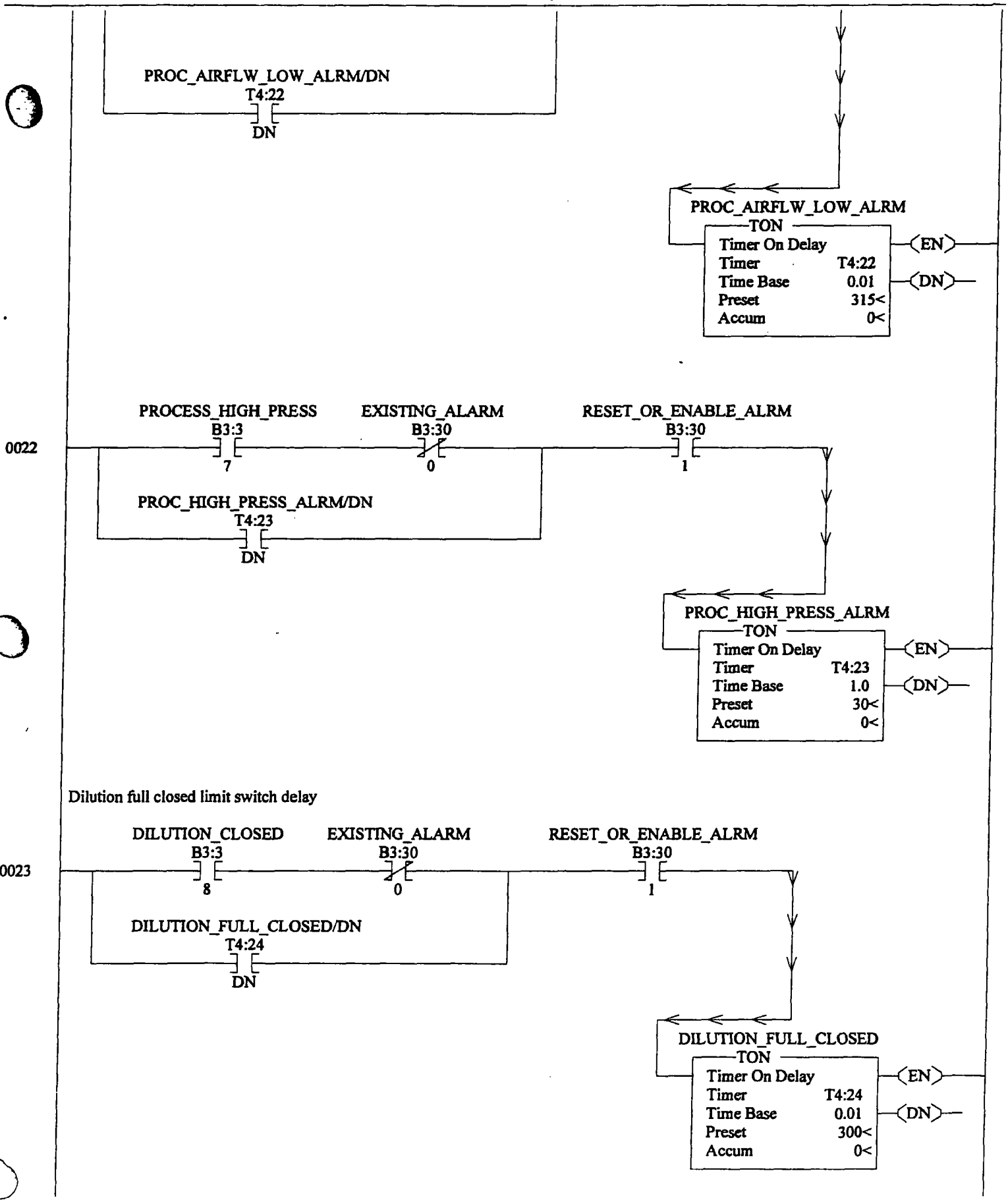
PROC_AIRFLW_LOW_ALRM/DN
T4:22
DN
PROC_AIRFLW_LOW_ALRM
TON
Timer On Delay
Timer T4:22
Time Base 0.01
Preset 315<
Accum 0<
EN
DN
0022
PROCESS_HIGH_PRESS
B3:3
7
EXISTING_ALARM
B3:30
0
RESET_OR_ENABLE_ALRM
B3:30
1
PROC_HIGH_PRESS_ALRM/DN
T4:23
DN
PROC_HIGH_PRESS_ALRM
TON
Timer On Delay
Timer T4:23
Time Base 1.0
Preset 30<
Accum 0<
EN
DN
Dilution full closed limit switch delay
0023
DILUTION_CLOSED
B3:3
8
EXISTING_ALARM
B3:30
0
RESET_OR_ENABLE_ALRM
B3:30
1
DILUTION_FULL_CLOSED/DN
T4:24
DN
DILUTION_FULL_CLOSED
TON
Timer On Delay
Timer T4:24
Time Base 0.01
Preset 300<
Accum 0<
EN
DN

Gas control module alarm - from CM100 (DUNG control device on gas train). No delay needed for this system, set to 1 sec..

0024

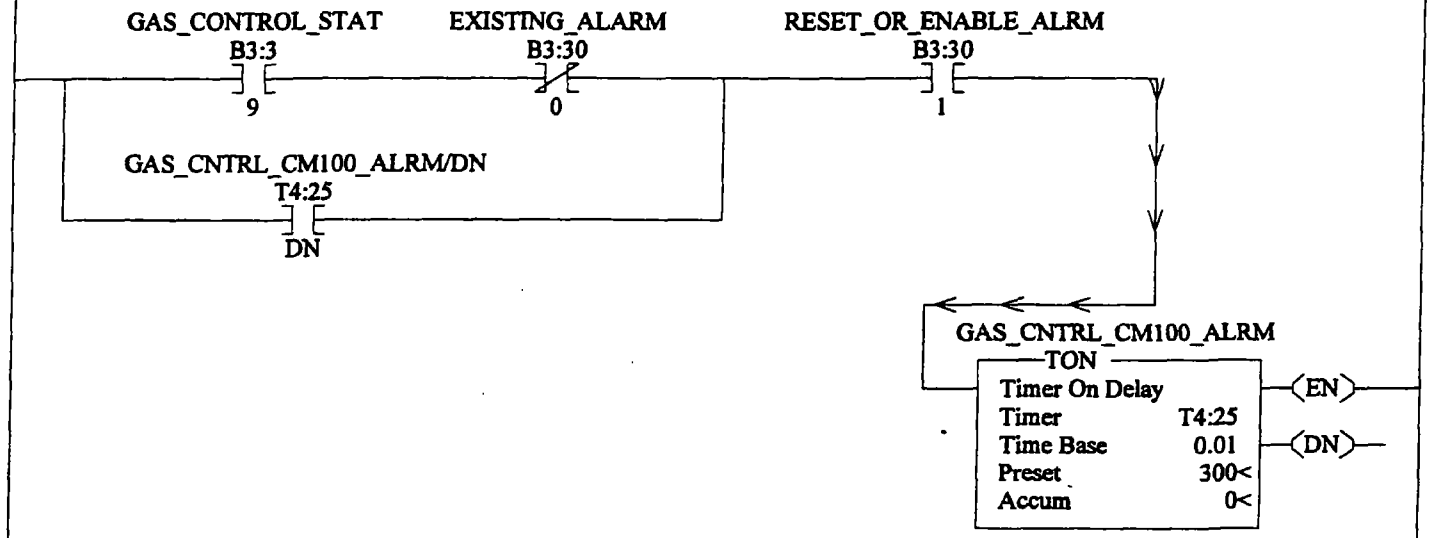

Gas valve proving system alarm - set the same as other flame protection alarms.

0025

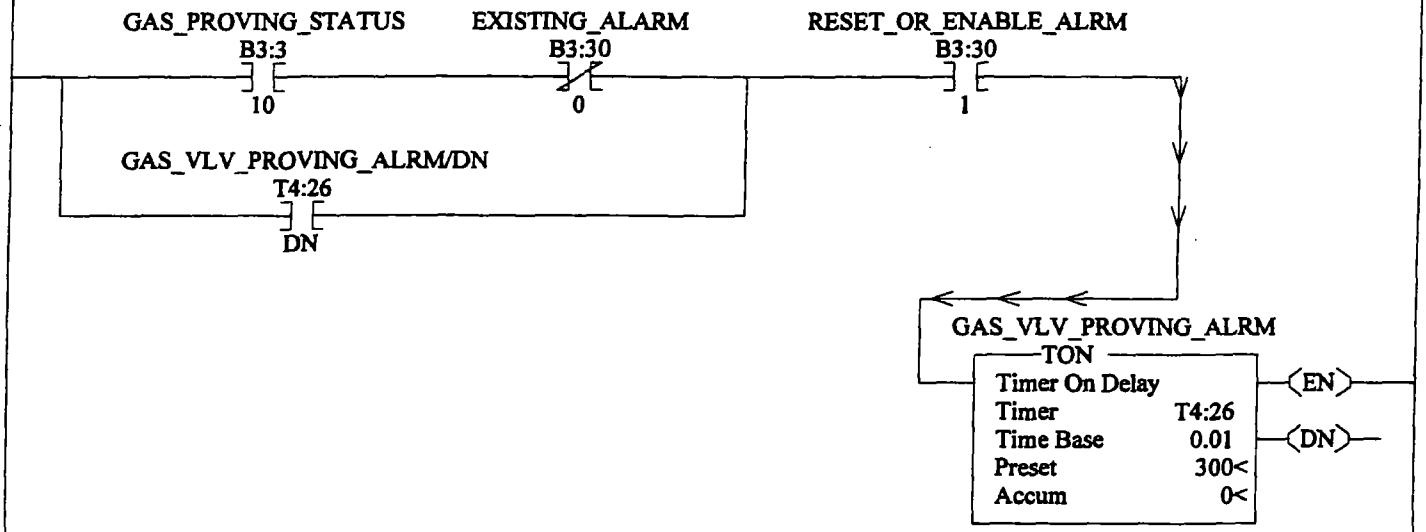

Combustion airflow status - alarm - this is part of a string so the time delay is offset (string includes combustion airflow , differential pressure and low flow).

0026

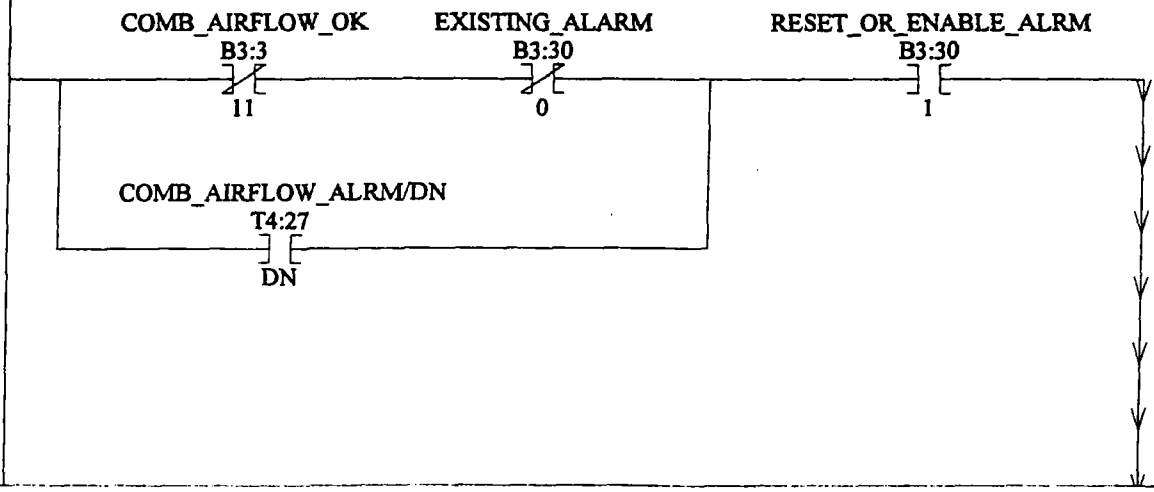

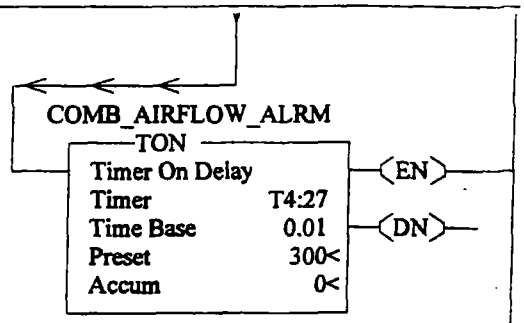

Catalyst differential pressure - this is part of a string so the delay is offset
(string includes combustion airflow , differential pressure and low flow).

0027

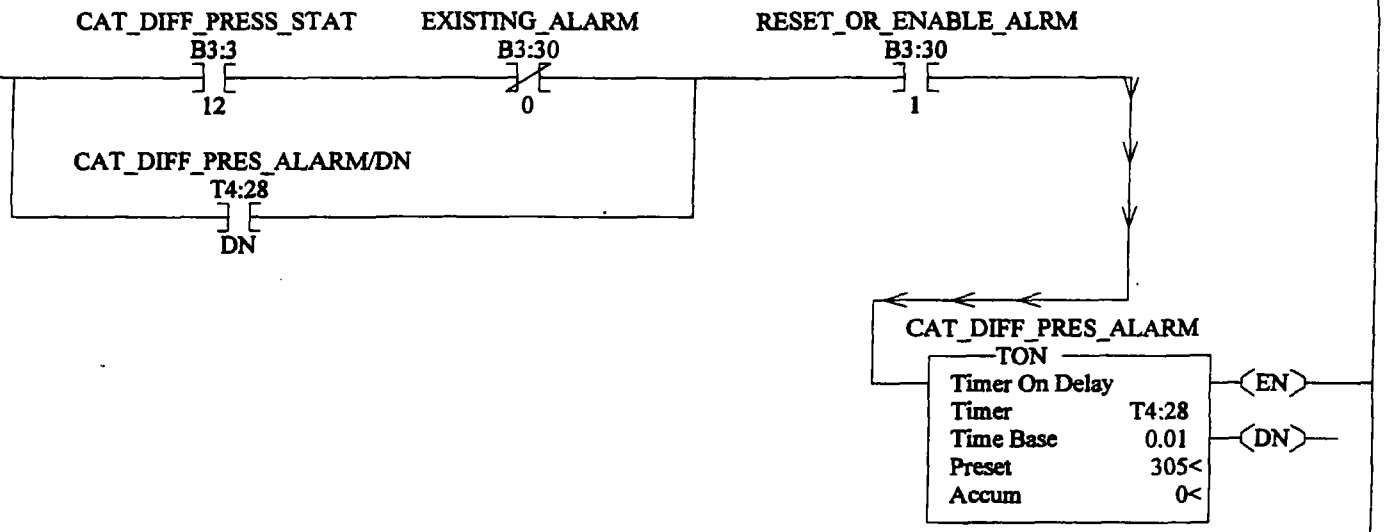

Catalyst differential pressure - this is part of a string so the delay is offset
(string includes combustion airflow , differential pressure and low flow).

0028

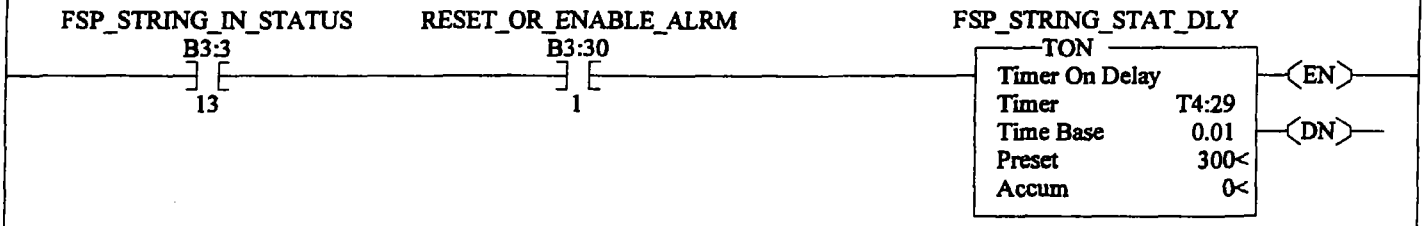

Determine if there is a alarm contion - if so ,set bit The system is put in shutdown mode (MOV 8 to b3:31) and the "Oxidizer Fault" output is set.

0029

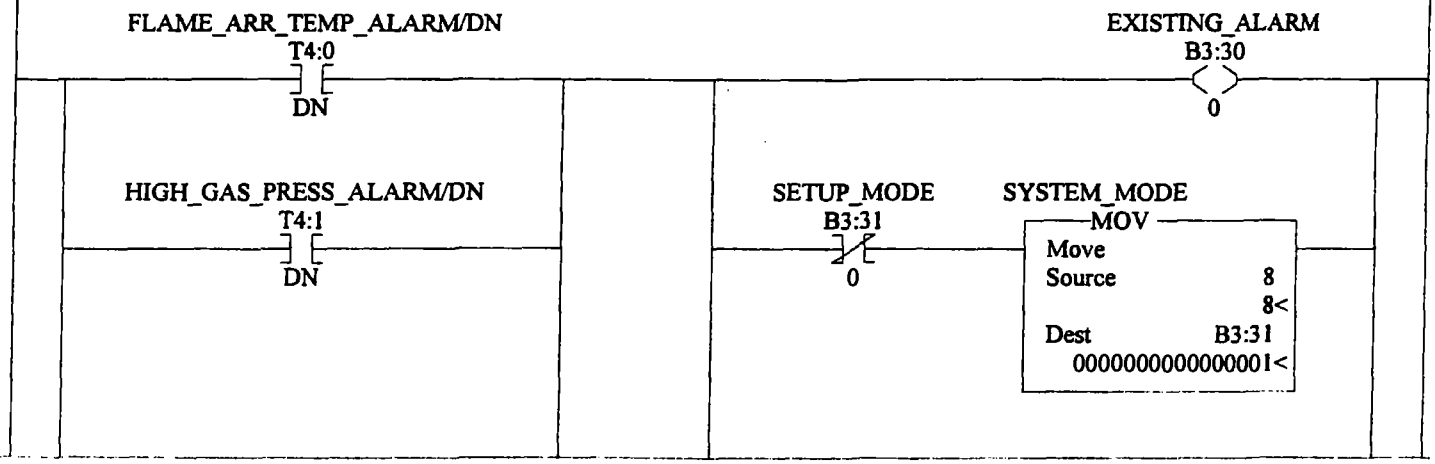

LOW_GAS_PRESS_ALARM/DN
T4:2
DN

GAS_MOD_CLOSED_ALARM/DN
T4:3
DN

HIGH_TEMP_ALARM/DN
T4:4
DN

CENT_TEMP_HI_ALARM/DN
T4:5
DN

FLAME_SAFEGUARD_ALRM/DN
T4:6
DN

AUTO_MODE_ALARM/DN
T4:13
DN

EXT_ENABLE_ALARM/DN
T4:14
DN

SCRUBBER_STAT_ALARM/DN
T4:15
DN

LOW_TEMP_ALARM/DN
C5:10
DN

COMBUST_AIR_OL_ALARM/DN
T4:18
DN

PROC_BLOWER_OL_ALARM/DN
T4:20
DN

SETUP_MODE
B3:31
0

OUTPUT_CONTROL_WORD
OR
Bitwise Inclusive OR
Source A 256
256<
Source B B3:10
0000h<
Dest B3:10
0000h<

PROC_AIRFLW_LOW_ALRM/DN
T4:22
DN

PROC_HIGH_PRESS_ALRM/DN
T4:23
DN

GAS_CNTRL_CM100_ALRM/DN
T4:25
DN

GAS_VLV_PROVING_ALRM/DN
T4:26
DN

COMB_AIRFLOW_ALRM/DN
T4:27
DN

CAT_DIFF_PRES_ALARM/DN
T4:28
DN

MAIN_BURNER_TIMEOUT/DN
C5:12
DN

0030 (END)

The following rung is a BURNER ON meter (hours)

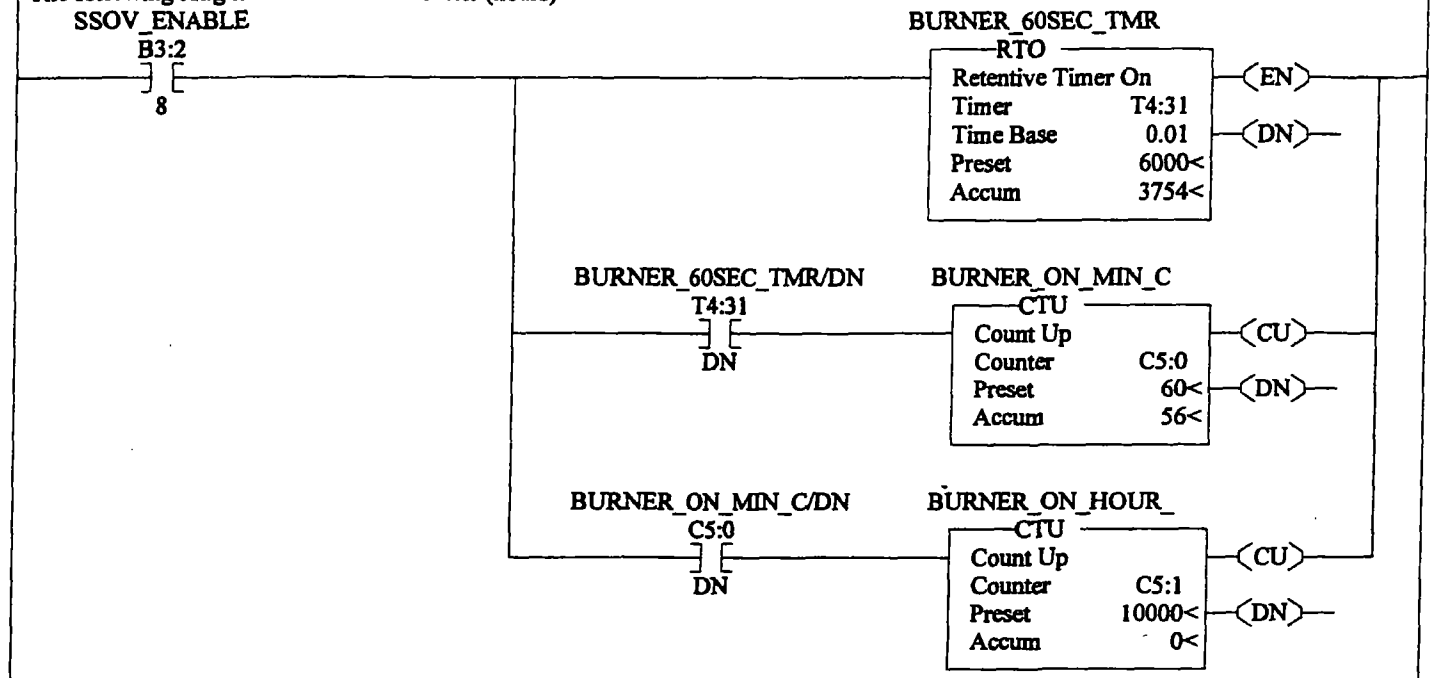

The next 3 rungs reset components of the burner hour meter - (on the rung above this one).

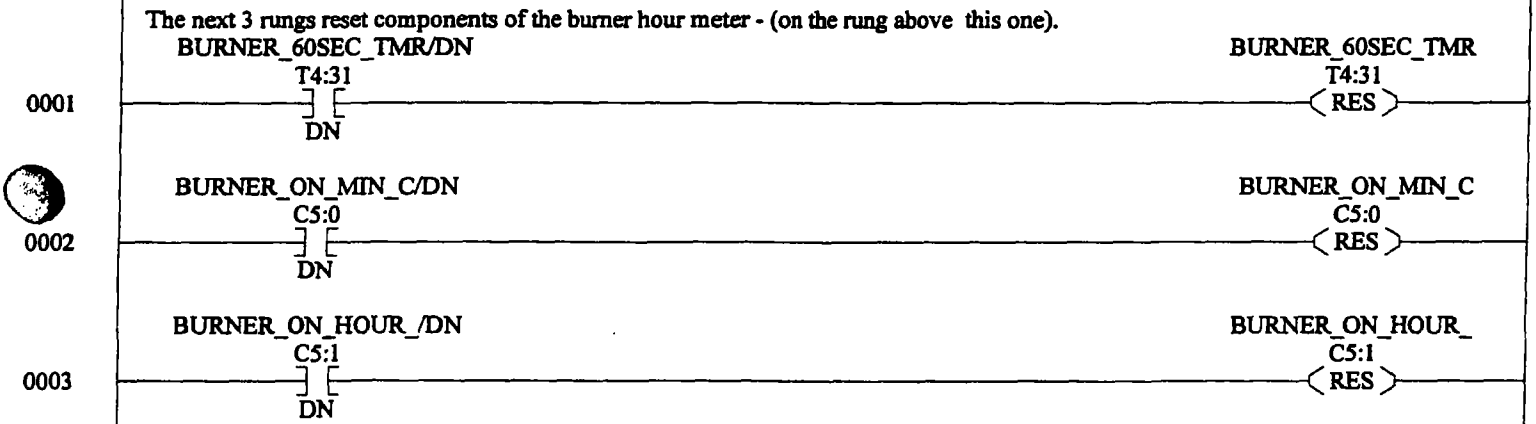

This rung is the counter for OFF/ON cycles of the burner - it auto clears at 9,999 counts

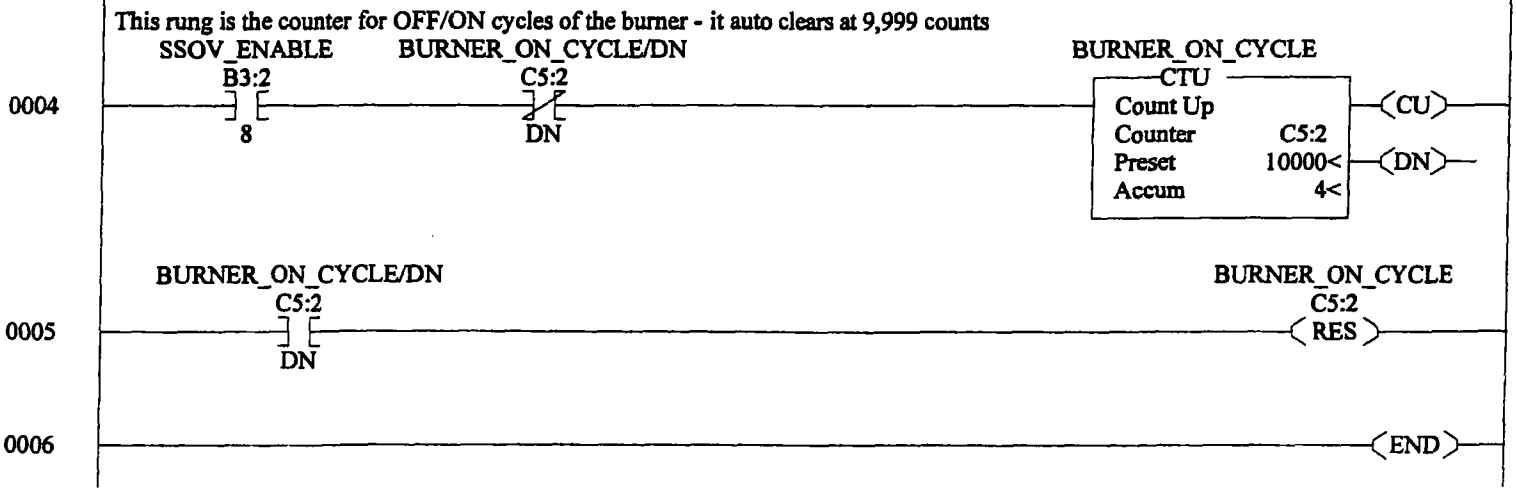

OUTPUT MAP

The following rungs map internal bits to outputs on the PLC. This is the only place outputs are found within the program.

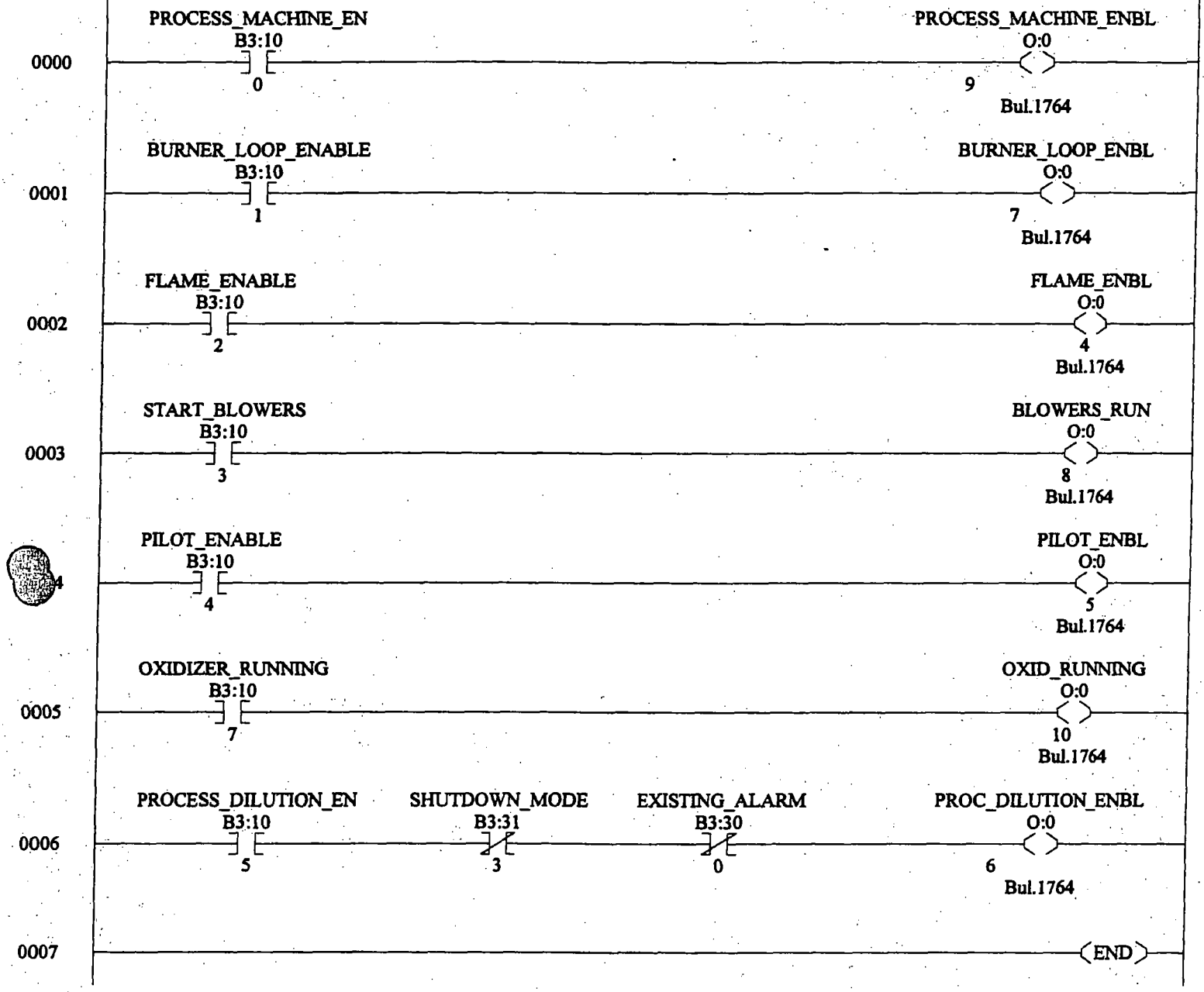

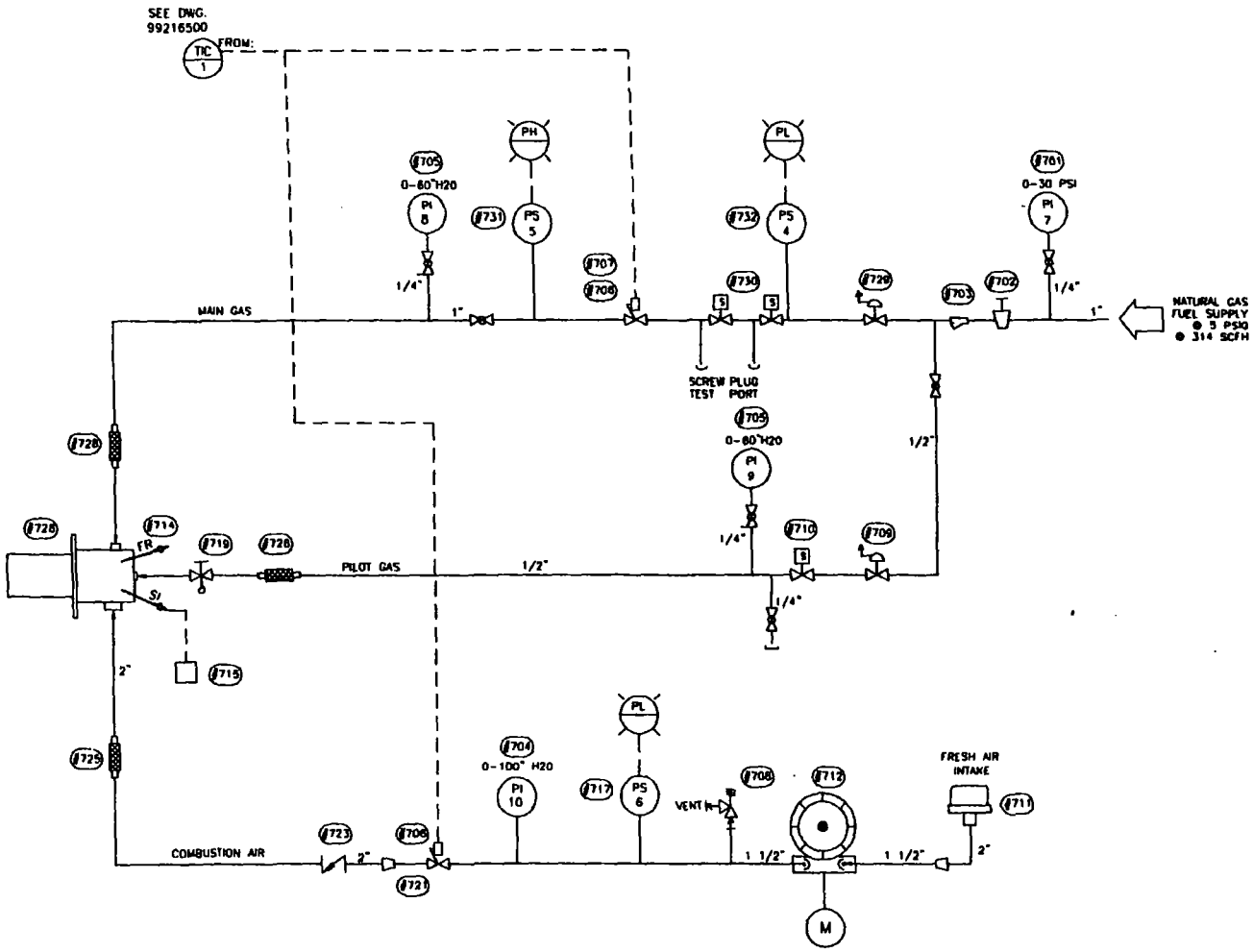

NOTES:

SEE DWG. SD232 FOR LEGEND SYSBOLS.

(#XXX) = B.O.M. REFERENCE NUMBERS ARE SHOWN ON BILLS OF MATERIAL AND COMPONENT CUT SHEETS.

CATALYTIC COMBUSTION

CUSTOMER:
LBG
DAYTON THERMAL PRODUCTS PLANT
DAYTON, OH

TITLE:
P&ID GAS TRAIN
HD SRCD 5000

Electrical Data
Project #99-216 LBG 2nd trip

Electrical/Control System Verification

Date: 1/14/00
Project #: 99-216
Project Name: LBG- Dayton
Performed By: R. Corcoran

Test (In House): _____
Startup (Site): _____
Service Call: X

Voltage and Current Data

Main Service (voltage/phase/frequency): 480/3/60

Main Service Voltage (measured

L1-L2:	482	G-L1:	280
L1-L3:	482	G-L2:	280
L2-L3:	477	G-L3:	274

Main Service Current (measured

L1:	17
L2:	17.15
L3:	15.9

Motor Data				
Motor ID	Combustion Air Blower	Process Air Blower		
HP	1	5		
Frame	143TCZ	184T		
RPM	3450	3450		
Hz	60	60		
Service Factor	1.25	1.15		
Power Factor	79	92		
Voltage				
N-Plate	208/480	208/480		
Actual	480	480		
Current (FLA)				
N-Plate	1.8	7.6		
Actual	1.2	7.2		
Fuse/CB	Fuse	Fuse		
Type	LP-CC	LPJ		
Size	5	12SP		
OL Setting	2.5	6		

System Alarms

Alarm Name	Shutdown Y/N	Setup/Note
Inlet High Temp	Y	
Low Gas Pressure	Y	
High Gas Pressure	Y	
Gas Mod Valve Closed	Y	
CAT High Temp Limit	Y	
CAT Center Temp High	Y	
Flame Safeguard Trip	Y	
Switch not in Auto Mode	Y	
External Disable Contact	Y	
Scubber Not Running	Y	
CAT Low Temp	Y	
Combustion Air OL	Y	
Process Blower OL	Y	
Process Airflow Low	Y	
Process High Press	Y	
Gas Valve Proving Fail	Y	
No Combustion Airflow	Y	
CAT Diff. Pressure	Y	
Burner Time Out	Y	

HOA Switch Check

Function	Light?	Hand Mode	Auto Mode Response
Combustion Air	Y	Functional	Functional
Process Air	Y	Functional	Functional

Configuration Record Sheet Model DC3 S/N				Process Controller		LBG- DAYTON 99-216	
Group Prompt	**Function Prompt**	**Value or Selection**	**Factory Setting**	**Group Prompt**	**Function Prompt**	**Value or Selection**	**Factory Setting**
TUNING	PROP BD	1.00	–	ALGORTHM	CONT ALG		PID A
	or				TIMER		DISABL
	GAIN		1.0000		PERIOD		0.01
	or		-328 /2498		START		KEY
	GAINVALn		–		L DISP		TI REM
	RATE MIN		-328 /2498		INP ALG1		NONE
	RSET MIN		1.00		MATH K		–
	or		-328 /2498		CALC HI		–
	RSET RPM		–		CALC LO		–
	MAN RSET		0		ALG1 INA		–
	PROPBD2		–		ALG1 INB		–
	or				ALG1 INC		–
	GAIN 2		1.000		PCO SEL		DISABL
	RATE2MIN		0.00		PCT CO		0.200
	RSET2MIN		1.00		ATM PRES		760.0
	or						
	RSET2RPM		–	OUT ALG	OUT ALG		CURRNT
	CYC SEC		20		4-20 RNG		100PCT
	or				OUT2 ALG		CURRNT
	CYC SX3		20		RLYSTATE		10F2ON
	CYC2 SEC		20		RLY TYPE		MECHAN
	or						
	CYC2 SX3		20	INPUT 1	IN1 TYPE	K TC H	0-10mV
	SECURITY		0		XMITTER1		LINEAR
	LOCKOUT		CALIB		IN1 HI	2400	1000
	AUTOMAN		ENABLE		IN1 LO	-325	0
	SP SEL		ENABLE		RATIO 1		1.00
	RUN HOLD		ENABLE		BIAS IN1		0
					FILTER 1	5	0
SP RAMP	SP RAMP		DISABL		BURNOUT1	UP	NONE
	TIME MIN		3		EMMISIV1		0.00
	FINAL SP		1000				
	SP RATE		DISABL	INPUT 2	IN2 TYPE	Disable	0-10mV
	EU/HR UP		0		XMITTER2		LINEAR
	EU/HR DN		0		IN2 HI		1000
	SP PROG		DISABL		IN2 LO		0
	FUZZY		DISABL		RATIO 2		1.00
	ACCUTUNE		DISABL		BIAS IN2		0
					FILTER 2		0
ACCUTUNE	AT ERROR		NONE		BURNOUT2		NONE
					EMMISIV2		0.00
CONTROL	PV SOURC		INP 1				
	PID SETS		1 ONLY	COM	ComSTATE		DISABL
	SW VALUE		0.00		ComADDR		0
	LSP'S	2	1 ONLY		SHEDTIME		0
	RSP SRC		NONE		PARITY		ODD
	AUTOBIAS		DISABL		BAUD		300
	SP TRACK		NONE		DUPLEX		HALF
	PWR MODE	A LSP	MANUAL		TX DELAY		1
	PWR OUT		LAST		SHEDMODE		LAST
	SP HiLIM	1400	1000		SHEDSP		TO LSP
	SP LoLIM		0		UNITS		PERCNT
	ACTION		REVRSE		CSP RATIO		1.0
	PCT/M UP		0		CSP BIAS		0
	PCT/M/ DN		0		LOOPBACK		DISABL
	OUTHiLIM		100				
	OUTLoLIM		0.0	ALARMS	A1S1 VAL	1100	90
	I Hi LIM		100.0		A1S2 VAL		10
	1 Lo LIM		0.0		A2S1 VAL		95
	DROPOFF		0		A2S2 VAL		5
	DEADBAND		1.0		A1S1 TYPE	Inp 1	NONE
	OUT HYST		0.5		A1S2 TYPE		NONE
	FAILMODE		NO LAT		A2S1 TYPE		NONE
	FAILSAFE		0.0		A2S2 TYPE		NONE
	MAN OUT		–		A1S1 HL		HIGH
	AUTO OUT		–		A1S1 EV		–
	PBorGAIN	PB PCT	GAIN		A1S2 HL		LOW
	MINorRPM	RPM	MIN		A1S2 EV		–
					A2S1 HL		HIGH
OPTIONS	AUXOUT		DISABL		A2S1 EV		–
	4mA VAL		0.0		A2S2 HL		LOW
	20mA VAL		0		A2S2 EV		–
	DIG IN 1	To 2 SP	NONE		AL HYST	0.1	0.1
	DIG 1 COM		DISABL		ALM OUT1		NO LAT
	DIG IN 2		NONE		BLOCK		DISABL
	DIG2 COM		DISABL				
SP 1 - 0 SP 2 - 1050				DISPLAY	DECIMAL		XXXX
					TEMPUNIT	°F	NONE
					PWR FREQ		60 Hz
					RATIO 2		DISABL
					LANGUAGE		ENGUS

Configuration Record Sheet Model DC3 S/N				Burner Controller		LBG- DAYTON 99-216	
Group Prompt	**Function Prompt**	**Value or Selection**	**Factory Setting**	**Group Prompt**	**Function Prompt**	**Value or Selection**	**Factory Setting**
TUNING	PROP BD		–	ALGORTHM	CONT ALG		PID A
	or				TIMER		DISABL
	GAIN	2.086	1.0000		PERIOD		0.01
	or		-328 /2498		START		KEY
	GAINVALn		–		L DISP		TI REM
	RATE MIN		-328 /2498		INP ALG1		NONE
	RSET MIN		1.00		MATH K		–
	or		-328 /2498		CALC HI		–
	RSET RPM		–		CALC LO		–
	MAN RSET		0		ALG1 INA		–
	PROPBD2		–		ALG1 INB		–
	or				ALG1 INC		–
	GAIN 2		1.000		PCO SEL		DISABL
	RATE2MIN		0.00		PCT CO		0.200
	RSET2MIN		1.00		ATM PRES		760.0
	or						
	RSET2RPM		–	OUT ALG	OUT ALG		CURRNT
	CYC SEC		20		4-20 RNG		100PCT
	or				OUT2 ALG		CURRNT
	CYC SX3		20		RLYSTATE		10F2ON
	CYC2 SEC		20		RLY TYPE		MECHAN
	or						
	CYC2 SX3		20	INPUT 1	IN1 TYPE	K TC H	0-10mV
	SECURITY		0		XMITTER1		LINEAR
	LOCKOUT		CALIB		IN1 HI	2400	1000
	AUTOMAN		ENABLE		IN1 LO	-325	0
	SP SEL		ENABLE		RATIO 1		1.00
	RUN HOLD		ENABLE		BIAS IN1		0
					FILTER 1	5	0
SP RAMP	SP RAMP		DISABL		BURNOUT1	UP	NONE
	TIME MIN		3		EMMISIV1		0.00
	FINAL SP		1000				
	SP RATE		DISABL	INPUT 2	IN2 TYPE	K TC H	0-10mV
	EU/HR UP		0		XMITTER2		LINEAR
	EU/HR DN		0		IN2 HI	2400	1000
	SP PROG		DISABL		IN2 LO		0
	FUZZY		DISABL		RATIO 2		1.00
	ACCUTUNE		DISABL		BIAS IN2		0
					FILTER 2		0
ACCUTUNE	AT ERROR		NONE		BURNOUT2	UP	NONE
					EMMISIV2		0.00
CONTROL	PV SOURC		INP 1				
	PID SETS		1 ONLY	COM	ComSTATE		DISABL
	SW VALUE		0.00		ComADDR		0
	LSP'S	2	1 ONLY		SHEDTIME		0
	RSP SRC		NONE		PARITY		ODD
	AUTOBIAS		DISABL		BAUD		300
	SP TRACK		NONE		DUPLEX		HALF
	PWR MODE	A LSP	MANUAL		TX DELAY		1
	PWR OUT		LAST		SHEDMODE		LAST
	SP HILIM		1000		SHEDSP		TO LSP
	SP LoLIM		0		UNITS		PERCNT
	ACTION		REVRSE		CSP RATIO		1.0
	PCT/M UP	7	0		CSP BIAS		0
	PCT/M/ DN	30	0		LOOPBACK		DISABL
	OUTHILIM		100				
	OUTLoLIM		0.0	ALARMS	A1S1 VAL	1000	90
	I HI LIM		100.0		A1S2 VAL		10
	1 Lo LIM		0.0		A2S1 VAL	700	95
	DROPOFF		0		A2S2 VAL		5
	DEADBAND		1.0		A1S1 TYPE	PV	NONE
	OUT HYST		0.5		A1S2 TYPE		NONE
	FAILMODE		NO LAT		A2S1 TYPE	PV	NONE
	FAILSAFE		0.0		A2S2 TYPE		NONE
	MAN OUT		–		A1S1 HL		HIGH
	AUTO OUT		–		A1S1 EV		–
	PBorGAIN		GAIN		A1S2 HL		LOW
	MINorRPM		MIN		A1S2 EV		–
					A2S1 HL		HIGH
OPTIONS	AUXOUT		DISABL		A2S1 EV		–
	4mA VAL		0.0		A2S2 HL		LOW
	20mA VAL		0		A2S2 EV		–
	DIG IN 1	to SP 2	NONE		AL HYST	0.1	0.1
	DIG 1 COM		DISABL		ALM OUT1		NO LAT
	DIG IN 2		NONE		BLOCK		DISABL
	DIG2 COM		DISABL				
SP 1 - 0° F				DISPLAY	DECIMAL		XXXX
					TEMPUNIT	°F	NONE
SP 2 - 950° F					PWR FREQ		60 Hz
					RATIO 2		DISABL
					LANGUAGE		ENGLIS

Electrical Checklist

- ☑ Verify user Interface function keys.
- ☑ User interface indicator lights correct.
- ☑ ESTOP tested.
- ☑ All alarms tripped and response verified.
- ☑ Create multiple faults - verify first out response.
- ☑ Controller record sheets completed.
- ☑ Pictures Logged.
- ☑ "As Built" or "Field Modified" schematics completed.
- ☑ Schematics included in enclosure pocket.
- ☑ Labels applied (UL, High Voltage, PLC Warning, CCC Standard)
- ☑ Meters verified (hour meters and cycle counters).

Indicator Devices

LBG 99-216

Designation	Location	BOM Ref.#	Make	Range	Reading Test	Reading Start-up	Reading Field	Notes
PI1	Oxidizer Inlet Pressure	319	WIKA	0-100" w.c.	23.5		18	
PI2	Quench Inlet Pressure	416	Dwyer	0-10" w.c.	7			
PI3	Scrubber Inlet Pressure	416	Dwyer	0-10" w.c.	1.2			
PI4	Demister Inlet Pressure	416	Dwyer	0-10" w.c.	0.3			
PI5	Recycle Supply Pressure	418	WIKA	0-60 PSI	40			
PI6	Wash Water Pressure	417	WIKA	0-100 PSI	60			
PI7	Pressure to Gas Train	701	WIKA	0-30 PSI	5			
PI8	Gas Pressure to Train	705	WIKA	0-60" w.c.	5			
PI9	Pilot Gas Pressure	705	WIKA	0-60" w.c.	38			
PI10	Combustion Air Pressure	704	WIKA	0-100" w.c.	42			
TI1	Oxidizer Inlet Temp.	318	WIKA	0-200 F	83			
TI2	Scrubber Inlet Temp.	419	WIKA	0-250 F	120			
FI1	Air Flow to Oxidizer	316	Dwyer	0-2" w.c.	0.45		.45	
FI2	Liquid Flow to Quench	426	B/W	2-20 GPM	9			
FI3	Liquid Flow to Scrubber	425	B/W	3-30 GPM	18			
FI4	Water Flow to Wash	427	B/W	0.5-5 GPM	0.5			
TE3	Cat. Inlet	320	B. Coleman	0-2400 F	-			
TE2	Cat. Center	320	B. Coleman	0-2400 F	-			
TE1	Cat. Outlet	320	B. Coleman	0-2400 F	-			

Switch Devices

LBG 99-216

Designation	Location	BOM Ref.#	Make	Range	Set Point Test	Set Point Start-up	Set Point Revised	Notes
PS1	Oxidizer Inlet	314	Dwyer	.5-2 PSI	1.25			
TS1	Oxidizer Inlet	313	Vulcun	-100-600 F	350			
PS2	Oxidizer Inlet	312	Dwyer	4-20" w.c.	10			
PDS1	Cat. Differential	321	Dwyer	4-20" w.c.	9			
PDT1	Oxidizer Inlet	317	Ashcroft	0-2" w.c.	-			
TS2	Scrubber Sump	420	Ashcroft	75-250 F	150			
PS3	Pump Discharge	411	Mercoid	10-150 PSI	15			
FS1	Wash Water	424	Flo Tect	.04-.6 GPM	0.25			
PS4	Gas Train	732	Dungs	1-20" w.c.	14			
PS5	Gas Train	731	Dungs	12-60" w.c.	56			
PS6	Combustion Air	717	Dwyer	4-20" w.c.	10			
TE3	Cat. Inlet	320	B. Coleman	0-2400 F	-			
TE2	Cat. Center	320	B. Coleman	0-2400 F	-			
TE1	Cat. Outlet	320	B. Coleman	0-2400 F	-			

Scrubber Panel Logic Sequence

CCC Project 99-216, LBG Inc.
Revised 11-2-01

Control Panel Type
This section describes the control and indication for a Scrubber. The unit is integrated with a gas fired catalytic oxidizer.

Main Power
Main power is provided (by others) to the panel-mounted disconnect. This also serves as a means of disconnecting the power to the control panel prior to opening the enclosure.

Selector Switches
When the system is running in "AUTO" mode, any selector switch turned to the "OFF" position will shut the system down.

Alarm Signals
The system will be disabled when any of the following conditions are met. Correction of the condition and manual reset of the alarm will be required to enable the system to operate.

Table 1 – Alarm Conditions and System Reaction.

Alarm Condition	System Response
Recirculation Pump Motor Overload	Total System Shutdown
High Scrubber Inlet Temperature	Total System Shutdown
High pH in Liquid Recirculant	Total System Shutdown
Low pH in Liquid Recirculant	Total System Shutdown
High Conductivity in Liquid Recirculant	Total System Shutdown
High Liquid Level in Scrubber Sump.	Total System Shutdown
Low/Low Liquid Level in Scrubber Sump.	Total System Shutdown
Low Pressure in Liquid Recirculant Line.	Total System Shutdown
Oxidizer Status (not running)	Time Delay – Total System Shutdown

Recirculation Pump
If the Hand-Off-Auto selector switch is in the "OFF" position, the pump is disabled.

In the "HAND" position, the pump will run as long as there is not a motor overload condition.

In the "AUTO" position, the pump will be allowed to run if the following conditions are met.

- The disable circuit from the oxidizer is not active and timed out.
- There is not a motor overload condition.
- All primary alarms are "ok"

Make Up Water Solenoid
The make up water solenoid (normally closed) allows fresh water into the system to compensate for losses of evaporation and blow-down. Panel HOA indication lamp is lit when the solenoid is activated (valve open).

The make up solenoid operates from the high and low level sensors in the scrubber sump.

If the Hand-Off-Auto selector switch is in the "OFF" position, the solenoid valve is closed.

In the "HAND" position, the solenoid valve will by-pass all logic and open.

In the "AUTO" position, the solenoid will be controlled by the PLC with make up dictated by the status of the level control.

Metering Pump
The metering pump output is regulated by a 4-20ma signal from the PH analyzer. The analyzer also provides high and low PH alarm contacts to the PLC. The metering pump does not utilize a HOA switch. Manual operation is achieved by entering "manual" mode on the pH controller – see Great Lakes pH controller manual for details.

pH Controller
The pH probe and controller continuously monitor the pH level of the recirculant. As the pH falls past a set point, the metering pump is activated, with the output flow regulated by a 4-20ma signal from the pH controller.

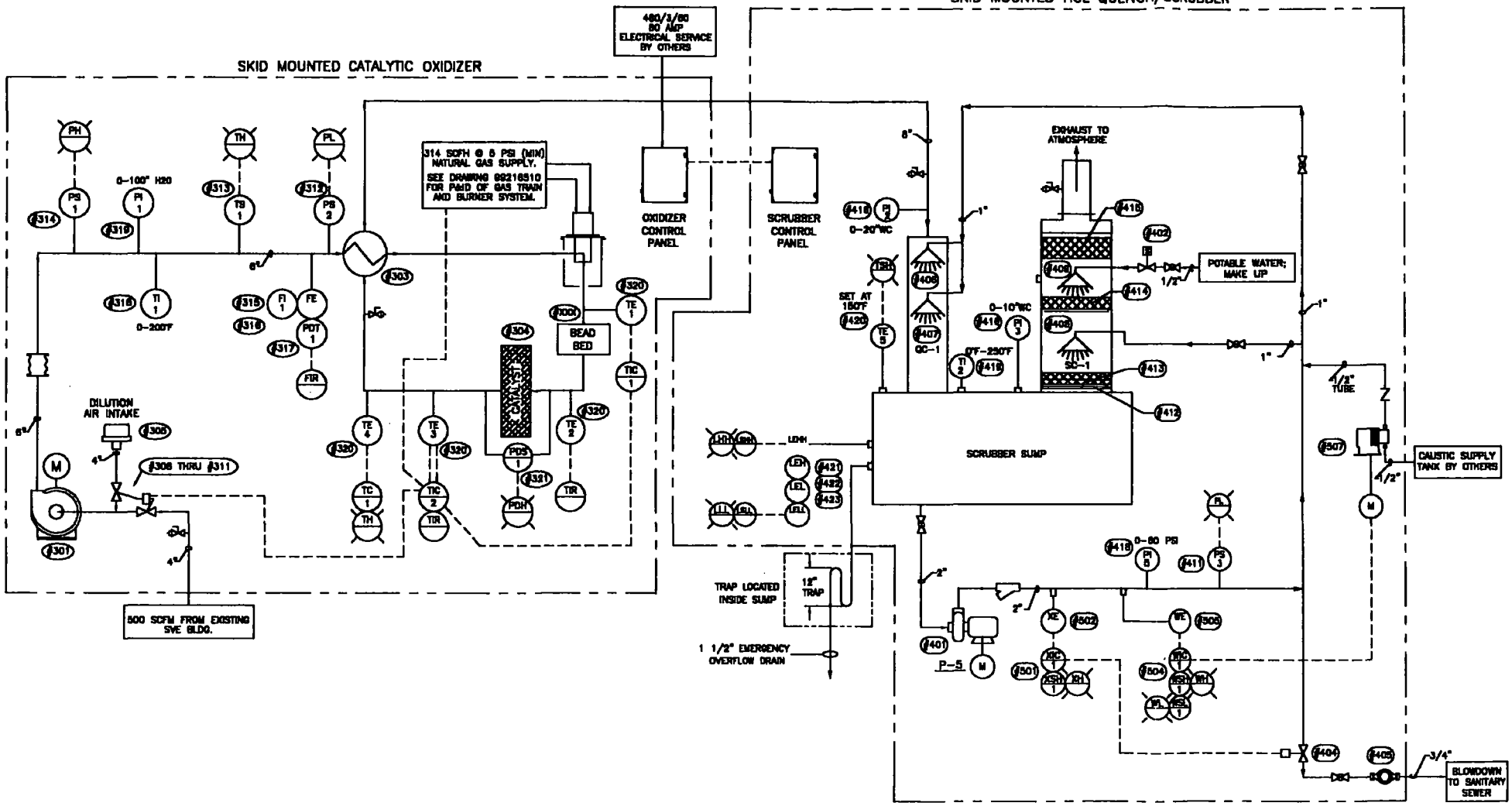

NOTES:

1. SEE DWG. SD232 FOR LEGEND SYMBOLS.
2. (#XXX) = B.O.M. REFERENCE NUMBERS ARE SHOWN ON BILLS OF MATERIAL AND COMPONENT CUT SHEETS.

REV	DATE	DESCRIPTION
B	11-2-01	UP DATED
A	1-7-00	ADD INDICATOR NUMBERS

CUSTOMER: LBG
DAYTON THERMAL PROD. PLANT
DAYTON, OH

TITLE: P&ID; HD SRCO 500G CATALYTIC OXIDIZER & HCL SCRUBBER

SCALE NONE | DATE 05/21/99 | DRAWN BY HR | CHKD BY EJ | PROJECT NO. 99-216 | REV B

DO NOT SCALE THIS DRAWING | DWG. NO. 99216500

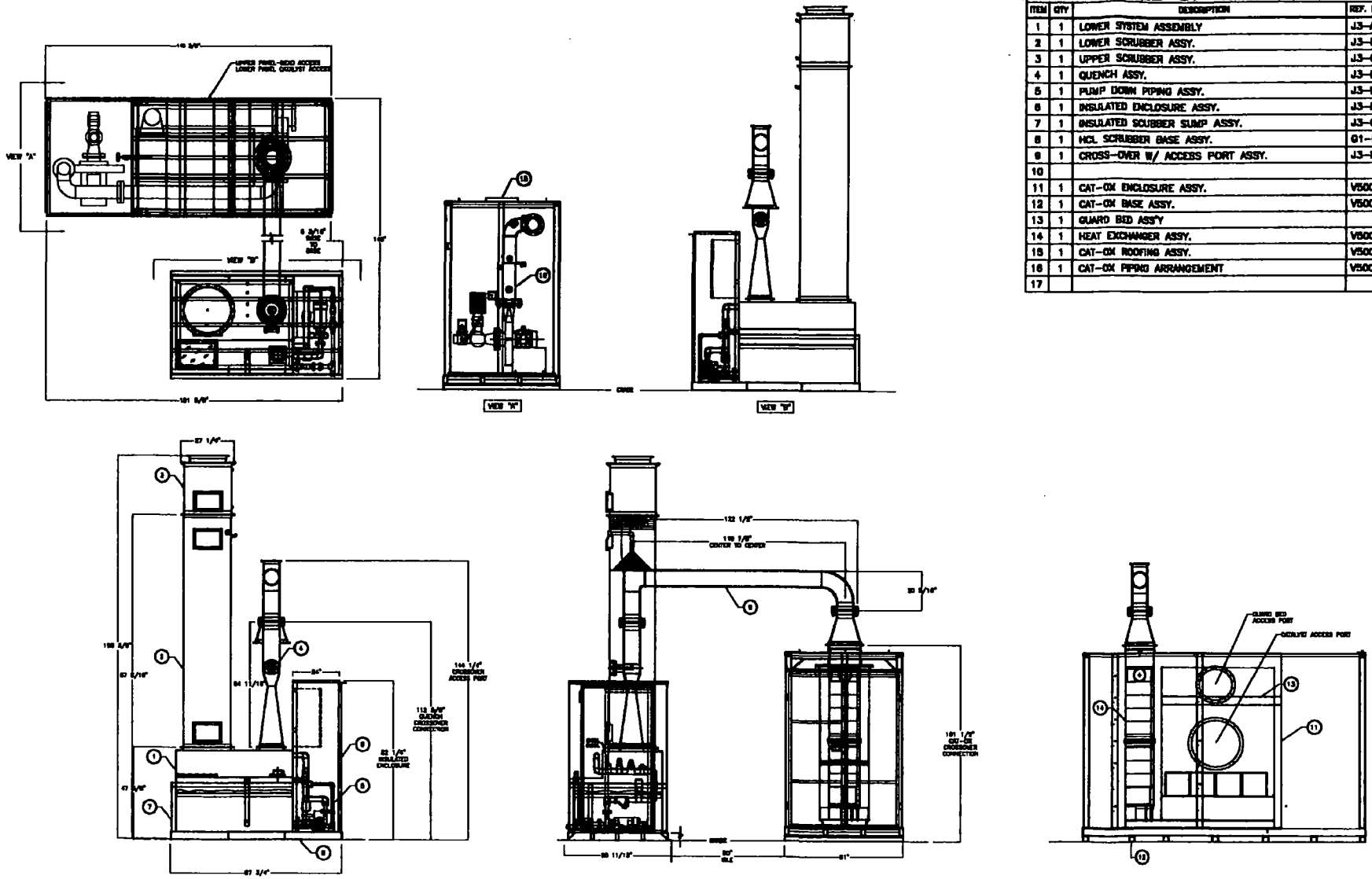

BILL OF MATERIAL

ITEM	QTY	DESCRIPTION	REF. DWG. #
1	1	LOWER SYSTEM ASSEMBLY	J3-A
2	1	LOWER SCRUBBER ASSY.	J3-B
3	1	UPPER SCRUBBER ASSY.	J3-C
4	1	QUENCH ASSY.	J3-D
5	1	PUMP DOWN PIPING ASSY.	J3-E
6	1	INSULATED ENCLOSURE ASSY.	J3-F
7	1	INSULATED SCUBBER SUMP ASSY.	J3-G
8	1	HCL SCRUBBER BASE ASSY.	G1-B2000
9	1	CROSS-OVER W/ ACCESS PORT ASSY.	J3-H
10			
11	1	CAT-OX ENCLOSURE ASSY.	V5000-430
12	1	CAT-OX BASE ASSY.	V5000-110
13	1	GUARD BED ASS'Y	
14	1	HEAT EXCHANGER ASSY.	V5000-415
15	1	CAT-OX ROOFING ASSY.	V5000-431
16	1	CAT-OX PIPING ARRANGEMENT	V5000-420
17			

UNLESS OTHERWISE NOTED
A/R PER ASSEMBLY

WEIGHT = N/A
TOLERANCES
DECIMAL: ± .03125"
FRACTIONAL: ± 1/32"
ANGULAR: ± .25°

PROJECT STATUS	DATE	CHECKED BY
PRELIMINARY ONLY (PROPERTY TO CHANGE)	07/19/99	
APPROVED FOR FABRICATION		
X AS-BUILT	11-26-01	
AS FIELD MODIFIED		

REV	DATE	DESCRIPTION
1	SYSTEM CHANGES FOR NEW CAT	11-26-01 UPDATE DWG FOR RETROFIT CATS

NOTES

CUSTOMER: LBG DAYTON OH SYSTEM RETRO-FIT

TITLE: COMPLETE SYSTEM ASSEMBLY SRCO-V500G & HS-10 SCRUBBER

SCALE: 48 | DATE: 11-26-01 | DRAWN BY: KW | CHK'D BY: G.U. | PROJECT NO.: J00-0222 | REV: 0

INCH DIM.→ALSO [XX.X]←MM DIM. | DO NOT SCALE THIS DRAWING | DWG. NO. 99216110

Conductivity Controller
The conductivity controller continuously monitors the total dissolved solids build up in the recirculant. When the conductivity reaches set point, the blow-down solenoid is enabled and recirculant liquid is discharged. The solenoid remains enabled until the low conductivity set point is reached.

Blow Down Valve
If the Hand-Off-Auto selector switch is in the "OFF" position, the solenoid is disabled.

In the "HAND" position, the solenoid will by-pass all logic and enable.

In the "AUTO" position, the conductivity controller will control the solenoid.

When the liquid level in the sump reaches the High/High level probe, the solenoid blow down valve will be enabled and discharge liquid from the sump. If the liquid level does not clear the High Limit probe after a predetermined time, the system will shut down.

Scrubber Status Output (dry contact)
A Dry contact is provided for control of external equipment. Scrubber Status is a N.O. contact that closes when the scrubber system is running.

Oxidizer "Running" Input (dry contact)
A terminal is provided for external status input (from Oxidizer). This is used to signal the scrubber to perform a timed shutdown due to an oxidizer fault.

\\CAT\SHARED FILES\Projects\1999\99216\Elec\ScrubberLogic.doc

PROJECT NAME:	LBG		PROJ. ORDER DAT
CCC PROJ. N0:	99-216		TARGET SHIP DATE
PROJ. MANAGER:	Gary Unke		BOM ISSUE DATE:

Revised 11-2-01

400 Series: Quench/Scrubber System

Item No.	Qty	CCC Part #	Description	MFG Part #	Vend. Code
401	1		Pump; Recycle, Price CD100SS-494-6A212R-200-36-3T6 480/3/60 2 HP TEFC Motor		PFC
402	1		Solenoid valve ASCO #L8210G94, NC, 1/2" NPT 120V with 6 ft. of lead wire		Lakeland
403					
404	1		Solenoid valve; Scrubber blowdown, 3/4" NPT ASCO #L8210G88, stainless steel, 120V with 6 ft. lead wire		Lakeland
405	1		Meter; Disc, Model M25, 3/4 mpt, with corrosion resistant internals, body and high temp RCDL register		Swanson-Flo
406	1		Nozzle; Quench, Bete model TF16 XW, 180 degree spray angle, 3/8" MPT, Hastelloy construction		Bete
407					
408	1		Nozzle; Scrubber, Bete model MP437M, 90 degree spray angle, 1" MPT, 316 stainless steel		Bete
409	1		Nozzle; Wash, Bete model 3/8 MPT, TFXP-14, 120 degree spray angle, 316 stainless steel		Bete
410	1		Nozzle; Emergency Quench, Bete model MP250M, 90 degree spray angle, 1/2" MPT, 316 stainless steel		Bete
411	1		Pressure Switch: Mercoid #SA1111E S5 K2		Dwyer
412	1		FRP Grate: 1" x 4" x 1" thick, 24" x 24" CCC to cut to 23 3/8" dia., then cut in half and resin coat cut ends		IPC
413	20 cu ft		Packing: Lantec #2 NUPAC, polypropylene		Hydrochem
414	1		Wash Pad tied to FRP support grid, cut to fit 23 3/4" I.D. tower.		Hydrochem
415	1		Mist Eliminator: KlmRe TI-29 Kynar tied to FRP support grid, designed for 785 ACFM at 135 degrees F, cut to fit 23 3/4" I.D. tower.		Hydrochem

Item No.	Qty	CCC Part #	Description	MFG. Part #	Vend. Code
416	2		Pressure Gauge: 0-10" wc #2-5010-NPT, 1/8" MPT		Dwyer
417	1		Thermacouple, 6" , K type, Inconnel	Pyro	
418	1		Gauge: Pressure, 0-60 PSI, Type 233.54 WIKA #9744916-829, stainless steel, liquid filled, 2 1/2" dial		WBC
419	1		Gauge: Temperature, 0-250 degrees F. WIKA #9791188		WBC
420	1		Switch: Temp., Watlow, manual reset	146E-1K2F-3100	Watlow
421	3		Probe; 3R 2CO, stainless steel, Warrick, CCC cut to length		Electric Scientific
422	2		Probe; 3R 1CO, stainless steel, Warrick, CCC cut to length		Electric Scientific
423	1		Flanged Electrode Fitting: 3F5E 3" PVC flange, Warrick		Electric Scientific

PROJECT NAME:	LBG		PROJ. ORDER DAT
CCC PROJ. N0:	99-216		TARGET SHIP DATE
PROJ. MANAGER:	Gary Unke		BOM ISSUE DATE:

Revision No. **500 Series: pH and Conductivity System**

Item No.	Qty	CCC Part #	Description		Vend. Code
	1		Analyzer; Conductivity, Great Lakes Model E33A1NN		J&W
502	1	X	Sensor; conductivity, Great Lakes Model 3725E 2T, polypropylene construction, convertible sytle for union mount		J&W
503	1		Union mount hardware; Great Lakes Model MH538N3N, 2" npt tee, constructed of CPVC with union and aluminum J-box		J&W
504	1		Analyzer; pH, Great Lakes Model P33A 1NN		J&W
505	1	X	Sensor; pH, Great Lakes Model LC P 6058PO polypropylene construction, convertible sytle for union mount, 10 ft. cable		J&W
506	1		Union mount hardware; Great Lakes Model MH538N9A, 2" npt tee, constructed of CPVC with union and alum. J-box		J&W
507	1		Chemical metering pump; Pulsatron #LP G5 MAPTC3 055		PFC
508	0		Buffer; pH 7 #99X3A0421		J&W
509	0		Buffer; pH 4 #99X3A0422		J&W
510	0		Buffer; pH 10 #99X3A0942		J&W

Flow to 160 GPM
Head to 100 ft.

BOM# 401

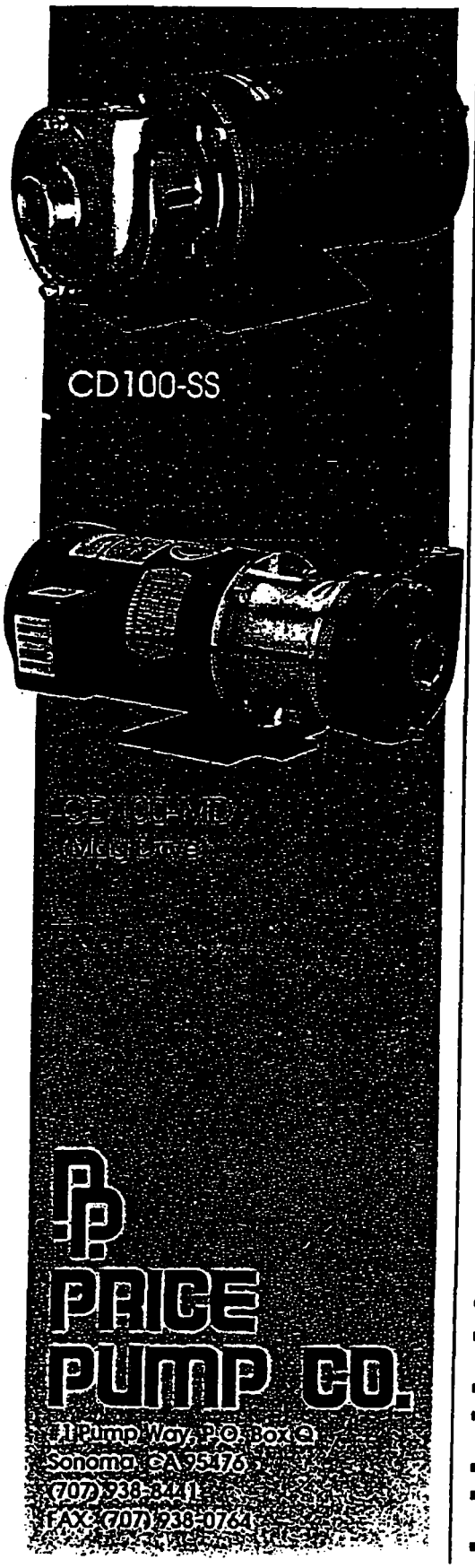

Type CD & CD-MD

(Mag Drive)

CENTRIFUGAL MOTOR PUMPS

Flows to 160 GPM
Heads to 100 ft.

SIZES

CD100 - 1" x 1¼" x 5"
CD150 - 1½" x 2" x 5"

MATERIALS

CD-SS	316 SS
CD-AI	Grey Cast Iron
CD-AB	All Bronze

FEATURES

Mechanical Sealed Pumps

- Sealed shaft
- Compact close coupled design using standard NEMA 56C motors
- Back pull-out design for easy maintenance
- 316SS - John Crane Type 21 Viton, Carbon vs. Ceramic, standard seal
- Iron or Bronze - John Crane Type 6A, Buna, Carbon vs. Ceramic, standard seal
- Double Type 21 Seal option
- John Crane Type 9 Teflon seal available on both models
- Optional seal face materials and elastomers include silicon carbide, tungsten carbide, F31 carbon, EPR, Neoprene. (additional materials available)
- Seal flush and seal quench optional

CD-MAG DRIVE

- Optional temperature and vibration monitoring
- Optional Hard coated shaft
- Number of magnets can be varied to match HP requirements
- Optional external flush
- Wide range of bearing materials available
- 56C motors standard

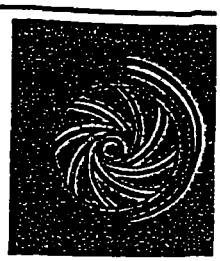

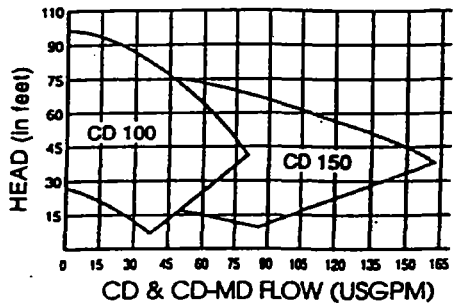

Curve for 60 Hz operation reference or
See engineering curves for final selecti

Type CD

(For Mag Drive dimensions see reverse

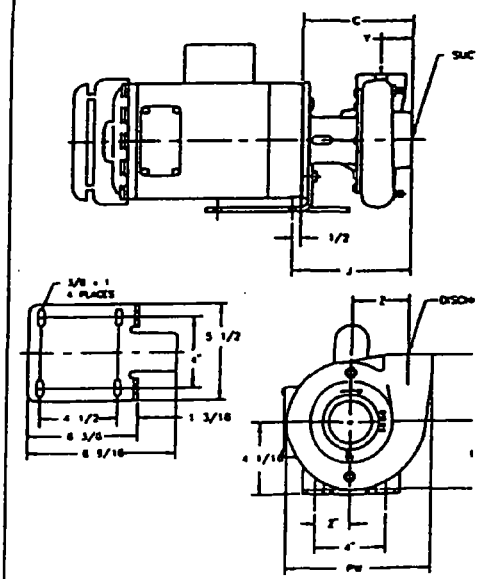

SEE REVERSE FOR MAG DRIVE DIMENSIONS

	PUMP END DIMENSIONS							PIPE THREADS IN INCH	
	C	DD	PW	X	Y	Z	J	SUCTION	DISCHARG
CD100 SS	3 3/4 146mm	3 1/8 79mm	7" 178mm	3 1/2 89mm	1 3/8 35mm	2 3/4 70mm	6 1/4 210mm	1 1/4" NPT	1" NPT
CD150 SS	6 1/4 158mm	3 7/8 98mm	8 1/4 210mm	3 13/16 97mm	1 11/16 43mm	3 1/8 79mm	6 3/4 171mm	2" NPT	1 1/2" NP

60 Hz

PRICE PUMP CO.
SONOMA, CALIFORNIA
Ph. (707) 938-8441 Fax (707) 938-0764

CURVE NUMBER: 6130005 -A MODEL: CD100SS SIZE: 1x1-1/4x5 RPM: 3450
IMPELLER DIA: Various MIN. IMPELLER DIA: 3.5" MAX. IMPELLER DIA: 4.94" MAX. SOLIDS: .125"
CUSTOMER: PPCO CUSTOMER'S P.O.
REMARKS: 99/99/99

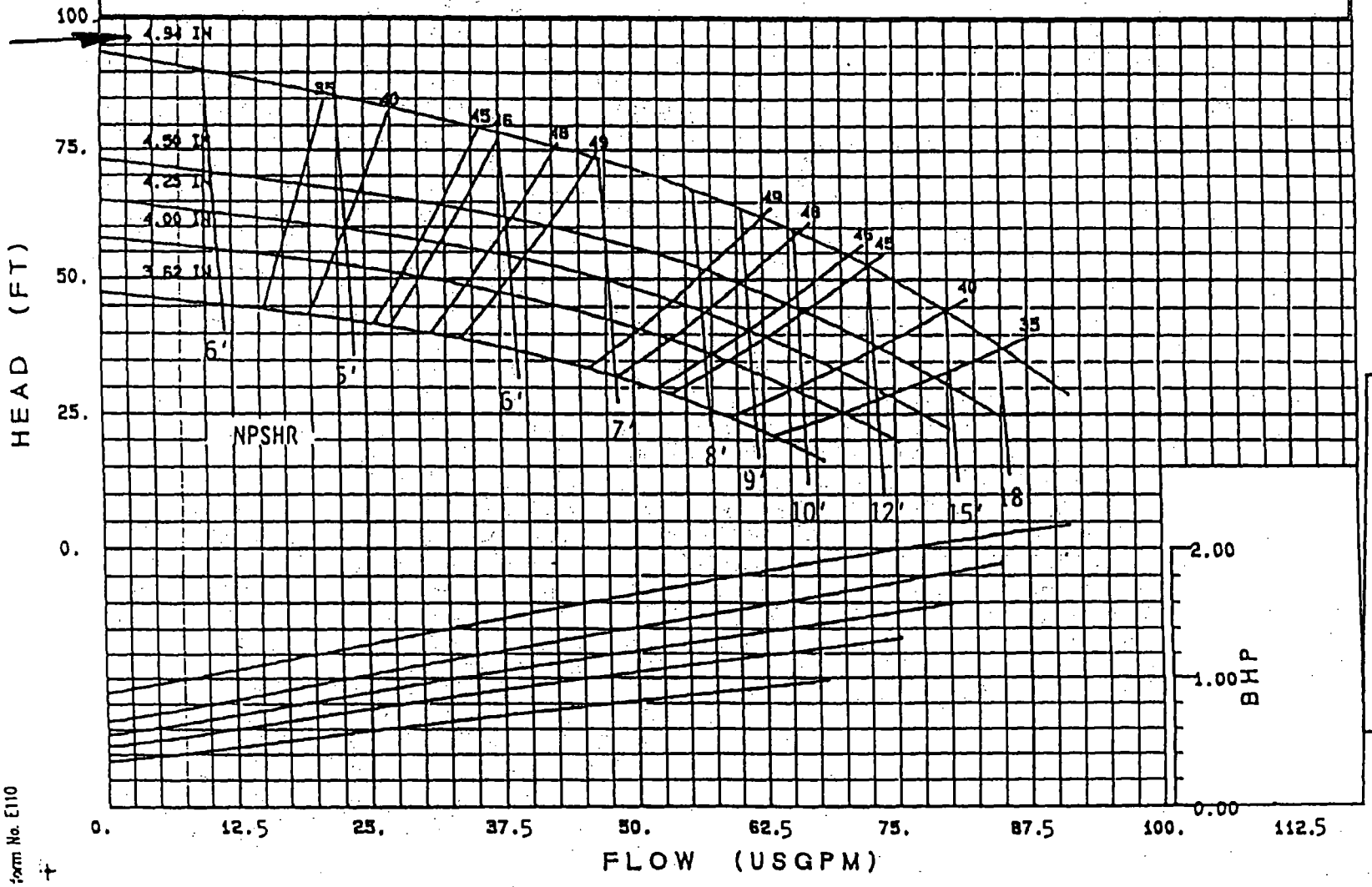

BOM# 401

Form No. E110

Price Pump Company

Type CD/RC
Installation, Operating and Maintance Manual

Caution:
Before installing, repairing or performing maintenance on this pump, read these instructions completely.

If pump has been used to pump hazardous materials be certain that all materials have been removed prior to working on the pump.

Warning!!
Ground motor before connection to electrical power supply!! Failure to ground motor can cause severe or fatal electrical shock hazard!!

Do not ground to gas supply line!!

Match voltage to nameplate voltage on motor. Incorrect voltage can cause fire or seriously damage motor, voiding warranty.

Before disassembling be certain all liquid is removed from the pump.

TYPE RC

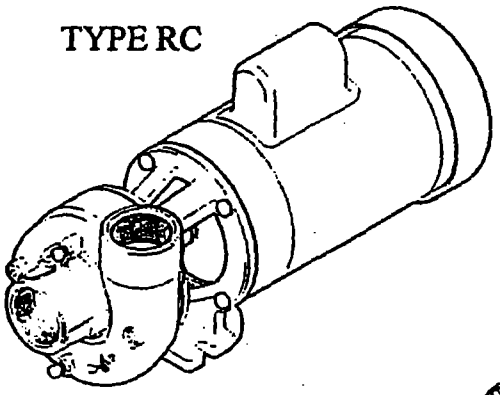

TYPE CD

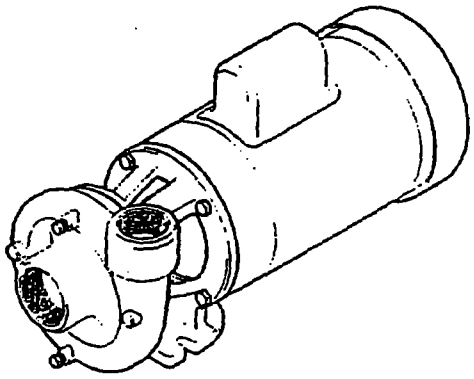

2 WAY PILOT OPERATED
General Service Solenoid Valves

Brass or Stainless Steel Bodies • 3/8" to 2½" N.P.T.

ASCO
Red-Hat • Red-Hat II
8210
SERIES

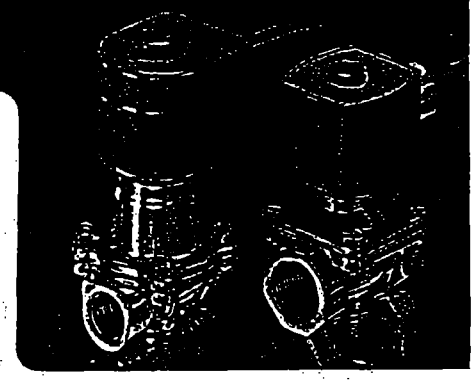

Specifications

Solenoid Enclosures: Valves listed in this series have either Red-Hat metal solenoid enclosures or Red-Hat II molded epoxy solenoids. Red-Hat II valves are identified by the change letter "G" in their catalog numbers, e.g., 8210G4, and are shown in red.

Standard Enclosures:
Red-Hat — Type 1 General Purpose
Red-Hat II — Types 1, 2, 3, 3S, 4 and 4X Combination General Purpose and Watertight.

Optional Enclosures:
Red-Hat — Types 3, 7 and 9 Combination Explosionproof and Raintight. To order, add prefix "EF" to catalog number. (Except Catalog Numbers 8210B57, 8210B58 and 8210B59)⑥
Red-Hat II — Types 3, 3S, 4, 4X, 6, 6P, 7 and 9 Combination Explosionproof and Watertight. To order, add prefix "EF" to catalog number.
Additional constructions are available. The Optional Electrical Features Section, page 11, contains descriptions and ordering information for: Open Frame Solenoids • Junction Box Enclosures • Panel Mount Constructions.

Electrical: Standard Voltages:
24, 120, 240, 480 volts, AC, 60 Hz (or 110, 220 volts, AC, 50 Hz)
6, 12, 24, 120, 240 volts, DC
Other voltages are available when required.

Coil: Continuous duty molded Class F or H, as listed.

Nominal Ambient Temperature Ranges: Red-Hat and Red-Hat II Valves/AC Construction: 32°F to 125°F.
Red-Hat Valves/DC Construction: 32°F to 77°F (104°F occasionally).
Red-Hat II Valves/DC Construction: 32°F to 104°F.
Refer to Engineering Section for details.

Valve Parts in Contact with Fluids:
Body — Brass or Stainless Steel, as listed
Seals and Discs — Buna "N" or Teflon*, as listed
Disc Holder — Nylon, as listed
Core Tube — 305 s.s.
Core and Plugnut — 430F s.s.
Springs — 302 s.s.
Shading Coil — Copper (brass body); Silver (stainless steel body)

Approvals: CSA certified.
UL listed as indicated. Refer to Engineering Section for details.

Ordering Information:
Important: We must have catalog number, voltage and Hertz, operating pressure and fluid handled. Use strainers with solenoid valves.

*Du[illegible]

BOM# 402

SPECIFICATIONS

Pipe Size (Ins.)	Orifice Size (Ins.)	Cv Flow Factor	Operating Pressure Differential (psi) Min.	Max. AC Air-Inert Gas	Max. AC Water	Max. AC Light Oil @ 300 SSU	Max. DC Air-Inert Gas	Max. DC Water	Max. DC Light Oil @ 300 SSU	Max. Fluid Temp. °F. AC	Max. Fluid Temp. °F. DC	Standard Solenoid Enclosures Red-Hat–Type 1 Red-Hat II–Types 1,2,3,3S,4 and 4X: Brass Body Catalog Number	Brass Body Constr. Ref. No. ⑤	Brass Body UL Listing	S.S. Body Catalog Number	S.S. Body Constr. Ref. No. ④	S.S. Body UL Listing	Watt Rating/ Class of Coil Insulation ⑦ AC	Watt Rating/ Class of Coil Insulation ⑦ DC
NORMALLY CLOSED (Closed when de-energized), Buna "N" or Teflon② Seating																			
3/8	3/8	1.5	①	150	125	—	40	40	—	180	150	8210G73③	1P	•	8210G36③	1P	•	6.1/F	11.6/F
3/8	5/8	3	0	150	150	—	40	40	—	180	150	8210G93	5D	o	—	—	—	10.1/F	11.6/F
3/8	5/8	3	5	200	150	135	125	100	100	180	150	8210G1	6D	o	—	—	—	6.1/F	11.6/F
3/8	5/8	3	5	300	300	300	—	—	—	175	—	8210G6	5D	o	—	—	—	17.1/F	—
~~1/2~~	~~7/16~~	~~2.2~~	~~③~~	~~150~~	~~125~~	~~—~~	~~40~~	~~40~~	~~—~~	~~180~~	~~150~~	~~8210G15③~~	~~8P~~	~~•~~	~~8210G37③~~	~~8P~~	~~•~~	~~6.1/F~~	~~11.6/F~~
1/2	5/8	4	0	150	150	—	40	40	—	180	150	8210G94	5D	o	—	—	—	10.1/F	11.6/F
~~1/2~~	~~5/8~~	~~4~~	~~0~~	~~150~~	~~150~~	~~125~~	~~40~~	~~40~~	~~—~~	~~175~~	~~150~~	~~—~~	~~—~~	~~—~~	~~8210G87~~	~~7D~~	~~•~~	~~17.1/F~~	~~11.6/F~~
1/2	5/8	4	5	200	150	135	125	100	100	180	150	8210G2	6D	o	—	—	—	6.1/F	11.6/F
1/2	5/8	4	5	300	300	300	—	—	—	175	—	8210G7	5D	o	—	—	—	17.1/F	—
3/4	5/8	5	0	150	150	125	40	40	—	175	150	—	—	—	8210G88	7D	•	17.1/F	11.6/F
3/4	3/4	5	5	125	125	125	100	90	75	180	150	8210G9	9D	o	—	—	—	6.1/F	11.6/F
3/4	3/4	5	0	150	150	—	40	40	—	180	150	8210G95	8D	o	—	—	—	10.1/F	11.6/F
3/4	3/4	6.5	5	250	150	100	125	125	125	180	150	8210G3	11D	o	—	—	—	6.1/F	11.6/F
3/4	3/4	6	0	350	300	200	200	180	180	200	77	8210B26②⑪	10P	⑤	—	—	—	15.4/F	30.6/H
1	1	13	0	150	125	125	100	100	80	180	77	8210B54⑪	31D	⑤	8210D89	15D	⑤	15.4/F	30.6/H
1	1	13	5	150	150	100	125	125	125	180	150	8210G4	12D	o	—	—	—	6.1/F	11.6/F
1	1	13.5	0	300	225	115	—	—	—	200	—	8210B27	14P	•	—	—	—	20/F	—
1 1/4	1 1/8	15	0	150	125	125	100	100	80	180	77	8210B55⑪	32D	⑤	—	—	—	15.4/F	30.6/H
1 1/4	1 1/8	15	5	150	150	100	125	125	125	180	150	8210G8	16D	o	—	—	—	6.1/F	11.6/F
1 1/2	1 1/4	22.5	0	150	125	125	100	100	80	180	77	8210B56⑪	33D	⑤	—	—	—	15.4/F	30.6/H
1 1/2	1 1/4	22.5	5	150	150	100	125	125	125	180	150	8210G22	18D	•	—	—	—	6.1/F	11.6/F
2	1 3/4	43	5	150	125	90	50	50	50	180	150	8210G100	20P	•	—	—	—	6.1/F	11.6/F
2 1/2	1 3/4	45	5	150	125	90	50	50	50	180	150	8210G101	21P	•	—	—	—	6.1/F	11.6/F

2 WAY PILOT OPERATED
General Service Solenoid Valves

Brass or Stainless Steel Bodies • 3/8" to 2½" N.P.T.

ASCO
Red-Hat • Red-Hat II
8210
SERIES

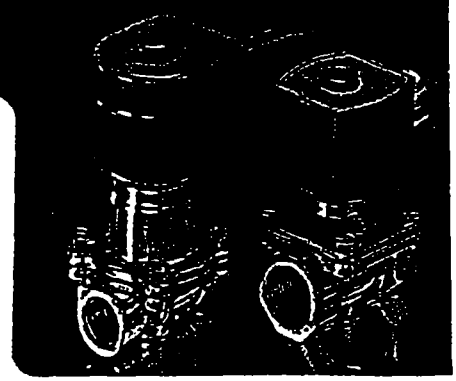

Specifications

Solenoid Enclosures: Valves listed in this series have either Red-Hat metal solenoid enclosures or Red-Hat II molded epoxy solenoids. Red-Hat II valves are identified by the change letter "G" in their catalog numbers, e.g., 8210G4, and are shown in red.

Standard Enclosures:
Red-Hat — Type 1 General Purpose
Red-Hat II — Types 1, 2, 3, 3S, 4 and 4X Combination General Purpose and Watertight.

Optional Enclosures:
Red-Hat — Types 3, 7 and 9 Combination Explosionproof and Raintight. To order, add prefix "EF" to catalog number. (Except Catalog Numbers 8210B57, 8210B58 and 8210B59)⑥
Red-Hat II — Types 3, 3S, 4, 4X, 6, 6P, 7 and 9 Combination Explosionproof and Watertight. To order, add prefix "EF" to catalog number.
Additional constructions are available. The Optional Electrical Features Section, page 11, contains descriptions and ordering information for: Open Frame Solenoids • Junction Box Enclosures • Panel Mount Constructions.

Electrical: Standard Voltages:
24, 120, 240, 480 volts, AC, 60 Hz (or 110, 220 volts, AC, 50 Hz)
6, 12, 24, 120, 240 volts, DC
Other voltages are available when required.

Coil: Continuous duty molded Class F or H, as listed.

Nominal Ambient Temperature Ranges: Red-Hat and Red-Hat II Valves/AC Construction: 32°F. to 125°F.
Red-Hat Valves/DC Construction: 32°F. to 77°F. (104°F. occasionally).
Red-Hat II Valves/DC Construction: 32°F. to 104°F.
Refer to Engineering Section for details.

Valve Parts in Contact with Fluids:
Body — Brass or Stainless Steel, as listed
Seals and Discs — Buna "N" or Teflon*, as listed
Disc Holder — Nylon, as listed
Core Tube — 305 s.s.
Core and Plugnut — 430F s.s.
Springs — 302 s.s.
Shading Coil — Copper (brass body); Silver (stainless steel body)

Approvals: CSA certified. UL listed as indicated. Refer to Engineering Section for details.

Ordering Information:
Important: We must have catalog number, voltage and Hertz, operating pressure and fluid handled. Use strainers with solenoid valves.

*DuPont Co. trademark

BOM# 404

SPECIFICATIONS

Pipe Size (ins.)	Orifice Size (ins.)	Cv Flow Factor	Operating Pressure Differential (psi) Min.	Max. AC Air-Inert Gas	Max. AC Water	Max. AC Light Oil @ 300 SSU	Max. DC Air-Inert Gas	Max. DC Water	Max. DC Light Oil @ 300 SSU	Max. Fluid Temp. °F. AC	Max. Fluid Temp. °F. DC	Standard Solenoid Enclosures Red-Hat-Type 1 Red-Hat II-Types 1,2,3,3S,4 and 4X — Brass Body Catalog Number	Brass Body Constr. Ref. No. ④	Brass Body UL Listing	S.S. Body Catalog Number	S.S. Body Constr. Ref. No. ④	S.S. Body UL Listing	Watt Rating/ Class of Coil Insulation ⑦ AC	Watt Rating/ Class of Coil Insulation ⑦ DC
NORMALLY CLOSED (Closed when de-energized), Buna "N" or Teflon② Seating																			
3/8	3/8	1.5	①	150	125	—	40	40	—	180	150	8210G73③	1P	•	8210G36③	1P	•	6.1/F	11.6/F
3/8	5/8	3	0	150	150	—	40	40	—	180	150	8210G93	5D	o	—	—	—	10.1/F	11.6/F
3/8	5/8	3	5	200	150	135	125	100	100	180	150	8210G1	6D	o	—	—	—	6.1/F	11.6/F
3/8	5/8	3	5	300	300	300	—	—	—	175	—	8210G6	5D	o	—	—	—	17.1/F	—
1/2	7/16	2.2	①	150	125	—	40	40	—	180	150	8210G15③	2P	•	8210G37③	2P	•	6.1/F	11.6/F
1/2	5/8	4	0	150	150	—	40	40	—	180	150	8210G94	5D	o	—	—	—	10.1/F	11.6/F
1/2	5/8	4	0	150	150	125	40	40	—	175	150	—	—	—	8210G87	7D	•	17.1/F	11.6/F
1/2	5/8	4	5	200	150	135	125	100	100	180	150	8210G2	6D	o	—	—	—	6.1/F	11.6/F
1/2	5/8	4	5	300	300	300	—	—	—	175	—	8210G7	5D	o	—	—	—	17.1/F	—
3/4	5/8	5	0	150	150	125	40	40	—	175	150	—	—	—	8210G88	7D	•	17.1/F	11.6/F
~~3/4~~	~~3/4~~	~~5~~	~~5~~	~~125~~	~~125~~	~~125~~	~~100~~	~~90~~	~~75~~	~~180~~	~~150~~	~~8210G9~~	~~9D~~	~~o~~	—	—	—	~~6.1/F~~	~~11.6/F~~
3/4	3/4	5	0	150	150	—	40	40	—	180	150	8210G95	8D	o	—	—	—	10.1/F	11.6/F
3/4	3/4	6.5	5	250	150	100	125	125	125	180	150	8210G3	11D	o	—	—	—	6.1/F	11.6/F
3/4	3/4	6	0	350	300	200	200	180	180	200	77	8210B26②⑩	10P	⑤	—	—	—	15.4/F	30.6/H
1	1	13	0	150	125	125	100	100	80	180	77	8210B54⑪	31D	⑤	8210D89	15D	⑤	15.4/F	30.6/H
1	1	13	5	150	150	100	125	125	125	180	150	8210G4	12D	o	—	—	—	6.1/F	11.6/F
1	1	13.5	0	300	225	115	—	—	—	200	—	8210B27	14P	•	—	—	—	20/F	—
1 1/4	1 1/8	15	0	150	125	125	100	100	80	180	77	8210B55⑪	32D	⑤	—	—	—	15.4/F	30.6/H
1 1/4	1 1/8	15	5	150	150	100	125	125	125	180	150	8210G8	16D	o	—	—	—	6.1/F	11.6/F
1 1/2	1 1/4	22.5	0	150	125	125	100	100	80	180	77	8210B56⑪	33D	⑤	—	—	—	15.4/F	30.6/H
1 1/2	1 1/4	22.5	5	150	150	100	125	125	125	180	150	8210G22	18D	•	—	—	—	6.1/F	11.6/F
2	1 3/4	43	5	150	125	90	50	50	50	180	150	8210G100	20P	•	—	—	—	6.1/F	11.6/F
2 1/2	1 3/4	45	5	150	125	90	50	50	50	180	150	8210G101	21P	•	—	—	—	6.1/F	11.6/F

Model Industrial RCDL

BOM# 405

Nutating Disc Meter (Bronze and Thermoplastic)

Technical Brief

GENERAL

Badger's RCDL positive displacement meters are one of the most cost effective methods in metering industrial fluids. The RCDL meter's simple but efficient design assures high accuracy and repeatability over the entire meter flow range.

Available in sizes, 1/2" through 2" for flows up to 170 GPM, these meters are extremely rugged and reliable. Maintenance is seldom required, but if necessary, takes but a few minutes. All parts are designed and built of materials to meet your application, providing you with long life and a trouble-free, precision flow meter.

To complement the RCDL meter line, Badger offers a complete line of accessories that includes totalizers, electromechanical and electronic transmitters, rate of flow indicators and batch/process controllers.

OPERATION

The metering principle, known as positive displacement, is based on the continuous filling and discharging of the measuring chamber. Controlled clearances between the disc and the chamber insure minimum leakage for precise measurement of each volume cycle. As the disc nutates, the center spindle rotates a magnet, whose movement is sensed through the meter wall by a follower magnet or by electronic sensors. Each revolution of the magnet is equivalent to a fixed volume of fluid, which is converted to any engineering unit of measure for totalization, indication or process control.

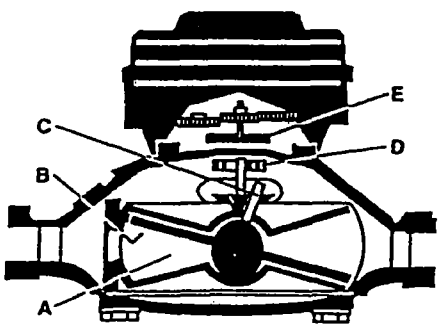

Liquid flowing through the meter chamber (A) causes a disc (B) to nutate or wobble. This motion, in turn, results in the rotation of a spindle (C) and drive magnet (D). Rotation is transmitted through the wall of the meter to a second magnet (E) which operates the transmitter.

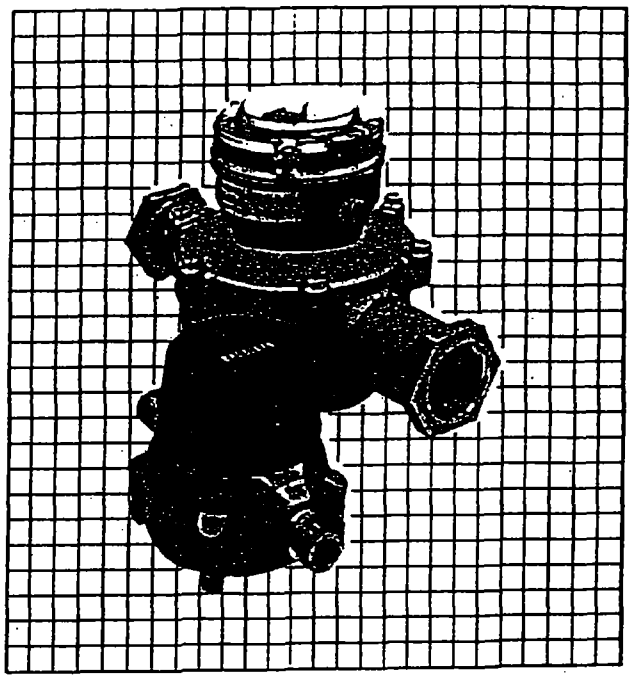

FEATURES

- **Accuracy: ±1.5% over full range**
- **Repeatability: ±0.5%**
- **Wide flow range**
- **Rugged bronze or thermoplastic housing**
- **Maximum Operating Temperature**
  Plastic Housing: 100° F
  Bronze Housing: 120° F
  Model 25 and Model 70 Bronze: 250° F Option
- **Maximum Operating Pressure: 150 PSI**
- **Easily maintained without removing from line**
- **Durable components for minimal maintenance**
- **Wide range of compatible accessories**
- **Direct replacement for SC-ER**

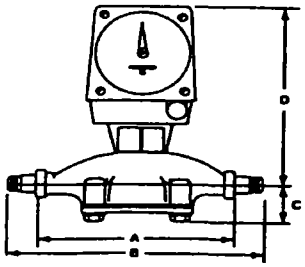

Model 25, 35 & 70

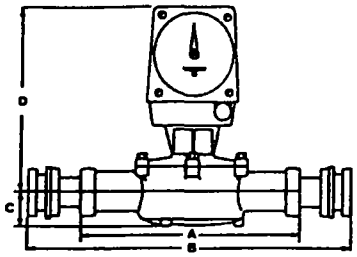

Model 120 & 170

BOM# 405

SPECIFICATIONS

Dimensions in Inches (Without Register)

Meter Model	Meter Size Inches	Housing Material	A Meter Length	B Meter Length w/ Conn.	C Center Line To Base	Flow Rates - Gallons: Cold Liquids 32° F to 120° F	Flow Rates - Gallons: Hot Water Chemicals & Oils 32° F to 250° F (BZ) 32° F to 100° F (PL)	Approx. Weight Pounds
~~M25~~	~~5/8~~	~~BZ or PL~~	~~7-1/2~~	~~12-7/16~~	~~1-3/8~~	~~1/2 - 25~~	~~1 - 25~~	~~5~~
M25	3/4	BZ or ~~PL~~	7-1/2	12-5/8	1-3/8	1/2 - 30	1 - 30	5
~~M35~~	~~3/4~~	~~BZ~~	~~9~~	~~14-1/8~~	~~1-3/4~~	~~3/4 - 35~~	~~N/A~~	~~6~~
M40	1	PL	10-3/4	16-3/16	2-1/4	3/4 - 50	N/A	5
M70	1	BZ	10-3/4	16-5/8	2-1/4	1 - 70	5 - 70	12
M120	1-1/2	BZ	12-5/8	19-3/4	2-5/8	2 - 120	N/A	20
M170	2	BZ	15-1/4	22-7/8	3-3/8	2 - 170	N/A	30

BZ = Bronze; PL = Plastic
Connection set assemblies available, all having NPT threads.

N/A = Not available in High Temperature / Chemical option.

HEIGHT DIMENSIONS (INCHES) (D) WITH REGISTER AND ACCESSORIES

Meter Size	With Non Resetable Register	With Transmitter	With MS-ER1 Transmitter	With ECA Transmitter	With 258 Register	With Series 76 Registers
~~5/8 & 5/8 x 3/4~~	~~5-3/4~~	~~7-3/8~~	~~11-1/4~~	~~9-3/8~~	~~8~~	~~15-1/4~~
3/4	6-1/8	7-3/4	11-5/8	9-3/8	8-3/8	15-5/8
~~1 & 1 x 1-1/4~~	~~7-1/2~~	~~9-1/8~~	~~13~~	~~11-3/16~~	~~9-3/4~~	~~17~~
1-1/2	9-1/8	10-3/8	14-1/4	12-3/4	11	18-1/4
2	10-3/4	12-1/4	16-1/8	14-3/8	12-7/8	20-1/8

MATERIALS OF CONSTRUCTION

	Cold Liquid Units	High Temp. and/or Chemical Units Model 25 & 70
Housing:	BZ ~~or PL~~	BZ - 250° F ~~PL - 100° F~~
Chamber:	Noryl	LCP
Disc:	SAN	LCP
Crossbar:	Nylon	Ultem
Magnetic Assembly:	Nylon	Ultem
Chamber Retainer:	Polyethylene	Metal Clip
Screen:	Polypropylene	None

PRESSURE LOSS CHART

Industrial Disc Meters

Rate of Flow in Gallons Per Minute

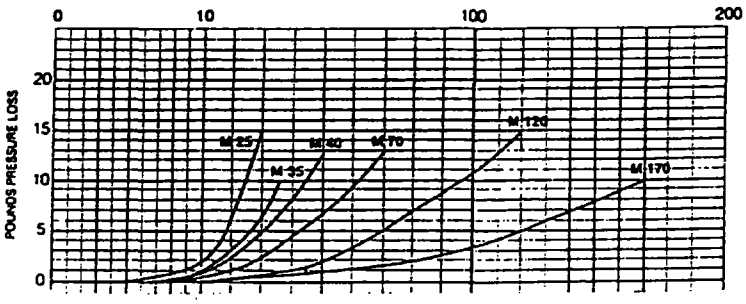

PERFORMANCE

Accuracy: ± 1.5%
Repeatability: ± 0.5%
Max. Operating Pressure: *150 PSI*

BadgerMeter,Inc. Industrial Division
4545 W. Brown Deer Road, P. O. Box 23099 Milwaukee, WI 53223-0099
Telephone: (414) 355-0400
Fax: (414) 355-7499

All rights reserved.
All data subject to change without notice.

Model Industrial RCDL Nutating Disc Meters	Installation & Operation Manual

BOM# 405

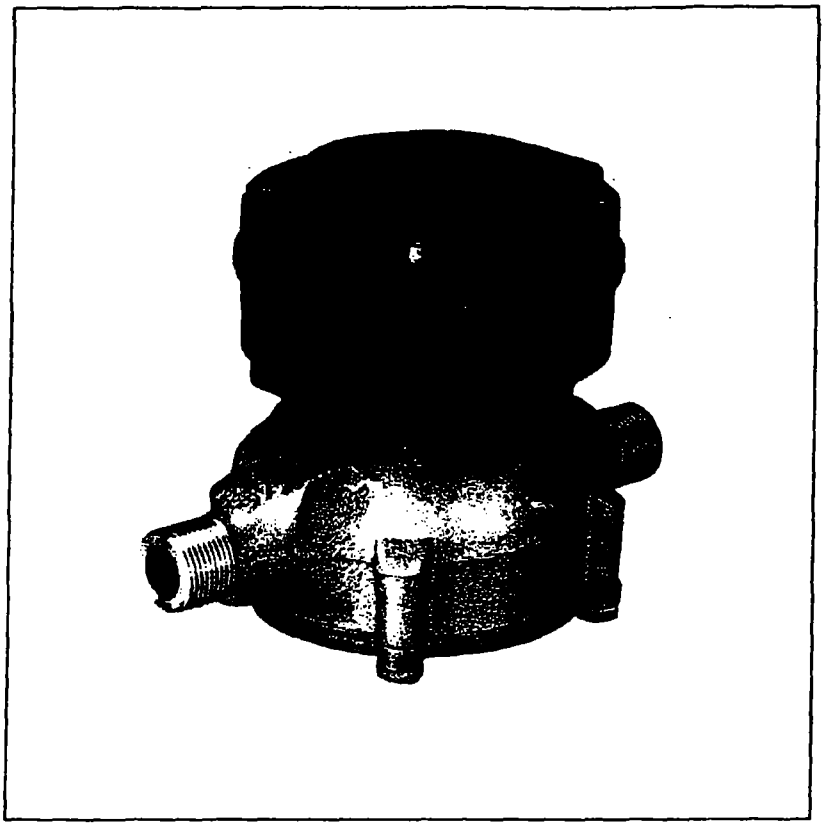

BadgerMeter, Inc.

Bulletin No. IOM-067-03
Part No. 53400-067
March 1999

BOM# 406

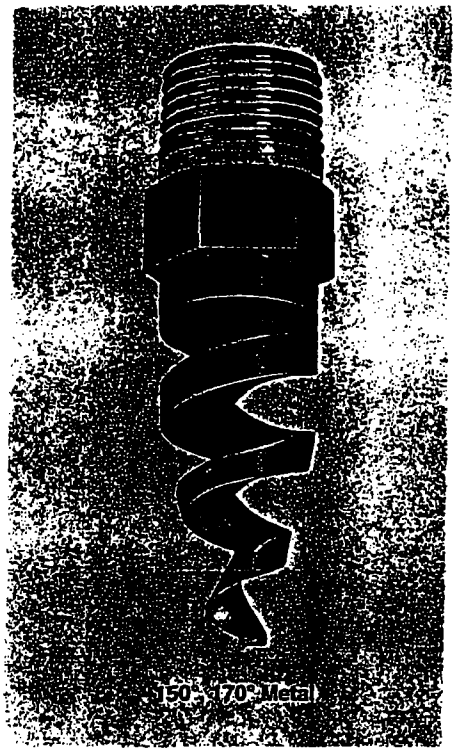

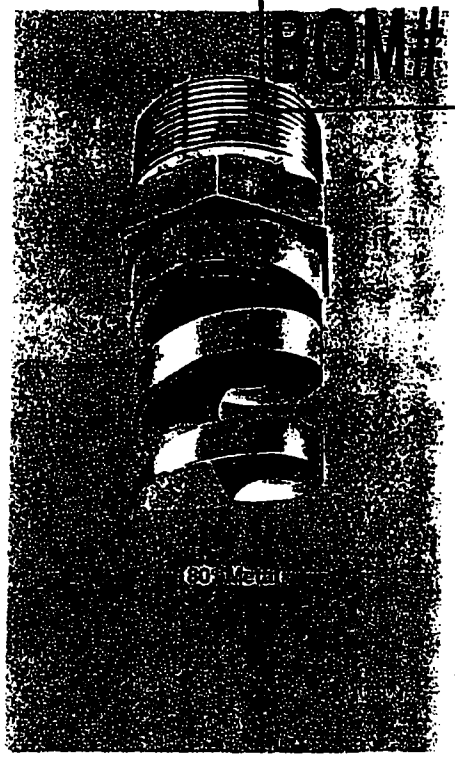

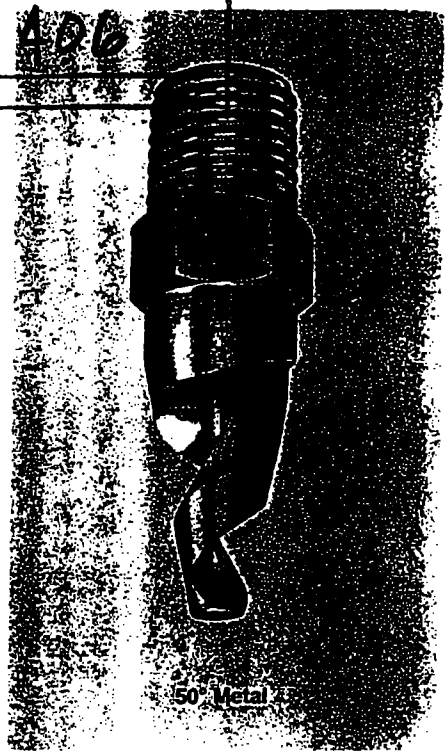

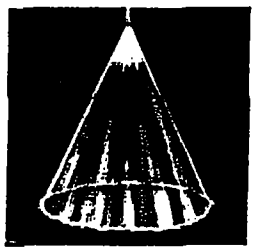

Hollow Cone 50° (N)

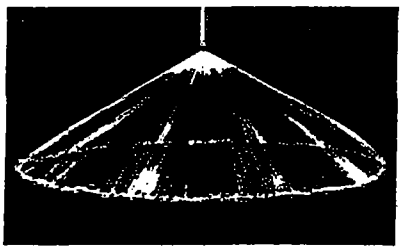

Hollow Cone 120° (W)

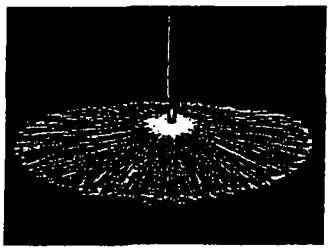

Hollow Cone 180° (XW)

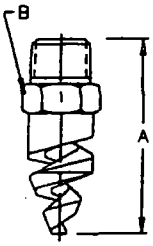

50°, 120°

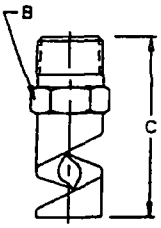

180°

TF Hollow Cone Flow Rates and Dimensions

Hollow Cone 50° (N), 120° (W) and 180° (XW) Spray Angles, 1/4" to 1 1/2" Pipe Sizes

Male Pipe Size	Nozzle Number	Available Spray Angles 50° 120° 180°	K Factor	GALLONS PER MINUTE @ PSI 5 PSI	10 PSI	20 PSI	30 PSI	40 PSI	50 PSI	60 PSI	80 PSI	100 PSI	High PSI operation recom. for Metal Only 200 PSI	400 PSI	Approx. (in.) Free Pass. Orif. Dia	Dia.	Dim. (in.) for Metal Only* A	B	C	Wt. (oz.) 180° Metal Plas.	
1/4	TF6	50° 120° 180°	0.221	[illegible]	[illegible]	[illegible]	[illegible]	[illegible]	[illegible]	[illegible]	[illegible]	[illegible]	[illegible]	[illegible]	0.09	0.09	[illegible]	[illegible]	[illegible]	[illegible]	[illegible]
	TF8	50° 120° 180°	0.411	[illegible]	[illegible]	[illegible]	[illegible]	[illegible]	[illegible]	[illegible]	[illegible]	[illegible]	[illegible]	[illegible]	0.13	0.13	[illegible]	[illegible]	[illegible]	[illegible]	[illegible]
	TF10	50° 120° 180°	0.632	[illegible]	[illegible]	[illegible]	[illegible]	[illegible]	[illegible]	[illegible]	[illegible]	[illegible]	[illegible]	[illegible]	0.16	0.13	[illegible]	[illegible]	[illegible]	[illegible]	[illegible]
3/8	TF12	50° 120° 180°	0.949		3.00	4.24	5.20	6.00	6.71	7.35	8.49	9.49	13.4	19.0	0.19	0.13	1.88	0.69	1.88	1.75	0.25
	TF14	50° 120° 180°	1.28		4.05	5.73	7.01	8.10	9.06	9.92	11.5	12.8	18.1	25.6	0.22	0.13					
	TF16	50° 120° 180°	1.68		5.30	7.50	9.18	10.6	11.9	13.0	15.0	16.8	23.7	33.5	0.25	0.13					
	TF20	50° 120° 180°	2.61		8.25	11.7	14.3	16.5	18.4	20.2	23.3	26.1	36.9	52.2	0.31	0.13					
1/2	TF24	50° 120° 180°	3.81	[illegible]	12.1	[illegible]	20.9	24.1	[illegible]	[illegible]	[illegible]	[illegible]	[illegible]	[illegible]	0.38	0.19	2.50	[illegible]	[illegible]	[illegible]	[illegible]
	TF28	50° 120° 180°	5.22	[illegible]	16.5	23.3	28.6	33.0	[illegible]	[illegible]	[illegible]	[illegible]	[illegible]	[illegible]	0.44	0.19					
3/4	TF32	50° 120° 180°	6.64	14.8	21.0	29.7	36.4	42.0	47.0	51.4	59.4	66.4	93.9	133	0.50	0.19	2.75	1.13	3.00	3.00	1.00
1	TF40	50° 120° 180°	10.6	21.7	33.5	47.4	58.0	67.0	74.9	[illegible]	[illegible]	[illegible]	[illegible]	[illegible]	0.63	0.25	[illegible]	1.38	[illegible]	[illegible]	[illegible]
	TF48	50° 120° 180°	15.0	33.6	47.5	67.2	82.3	95.0	106	[illegible]	[illegible]	[illegible]	[illegible]	[illegible]	0.75	0.25					
1 1/2	TF56	180°	20.4	45.6	64.5	91.2	112	129	144	158	182	204	288	408	0.88	0.31					
	TF64	180°	26.7	59.7	84.5	120	146	169	189	207	239	267	378	534	1.00	0.31		2.00	4.38	30.0	6.00
	TF72	180°	30.4	67.9	96.0	136	166	192	215	235	272	304	429	607	1.13	0.31					

Flow Rate (GPM) $= K\sqrt{PSI}$ *Dimensions are for bar stock, cast sizes may vary. ¹ 1.00 for 180° ² 1.63 for 180°

Standard Materials: Brass, 316 Stainless Steel, PVC, Polypropylene and Teflon® (Poly. not available for TF6 &TF8). See chart on page 17 for complete list.

CALL 1-800-235-0049
Call for the name of your nearest BETE representative.

MP

BOM# 408

Wide Angle Metal

Maximum Free Passage

DESIGN FEATURES

- Ultimate clog-resistant design with largest free passage available in a full cone nozzle
- Two unique S-shaped internal vanes allow free passage of particles
- High energy efficiency
- Easily handles dirty, lumpy liquids
- Male and female connections
- Flanged connection available
- U.S. Patent 4,014,470

SPRAY CHARACTERISTICS

- High reliability spray performance under the most difficult conditions

Spray pattern: Full Cone
(Square patterns to special order)
Spray angles: 30°, 60°, 90°, and 120°
Flow rates: 0.7 to 938 gpm
(Flow rates up to 4500 gpm available; call our Engineering Department for details)

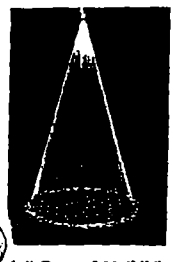

Full Cone 30° (NN)

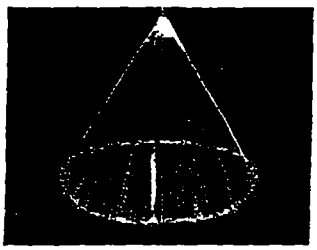

Full Cone 60° (N)

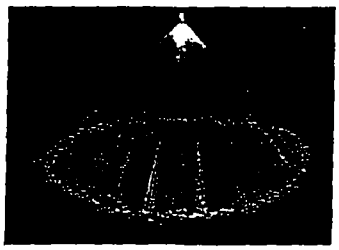

Full Cone 90° (M)

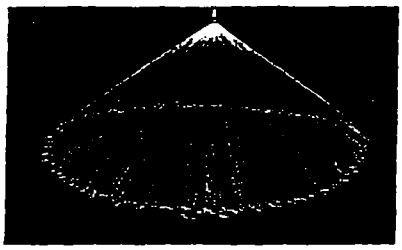

Full Cone 120° (W)

MP Flow Rates and Dimensions

Full Cone, Extra Narrow 30° (NN), Narrow 60° (N), Medium 90° (M) and Wide 120° (W) Spray Angles, 3/8" to 4 Pipe Sizes

Male or Female Pipe Size	Nozzle Number	K Factor	GALLONS PER MINUTE @ PSI 3 PSI	5 PSI	7 PSI	10 PSI	15 PSI	20 PSI	30 PSI	40 PSI	60 PSI	80 PSI	Approx. Free Passage Dia. (in.)	Approx. Dimensions (in.) Overall length 30° A	60° A	90° A	120° A	B	Wt.* (lbs.) Metal
3/8	MP125	0.455	0.74	0.92	1.07	1.25	1.50	1.70	2.03	2.31	2.76	3.13	0.125	3.00	1.50	1.50	1.50	0.88	0.19
	MP156	0.723	1.17	1.47	1.70	1.99	2.38	2.70	3.23	3.66	4.38	4.97	0.156						0.19
	MP187	1.04	1.69	2.12	2.46	2.87	3.44	3.90	4.66	5.29	6.32	7.18	0.188						0.16
1/2	MP187	1.04	1.69	2.12	2.46	2.87	3.44	3.90	4.66	5.29	6.32	7.18	0.188	4.00	1.88	1.88	1.88	1.00	0.28
	MP218	1.66	2.69	3.37	3.91	4.57	5.46	6.20	7.41	8.41	10.1	11.4	0.219						0.25
	MP250	1.87	3.04	3.80	4.41	5.16	6.17	7.00	8.37	9.50	11.4	12.9	0.250						0.25
3/4	MP281	2.30	3.73	4.67	5.42	6.34	7.58	8.60	10.3	11.7	13.9	15.8	0.281	4.00	2.50	2.38	2.50	1.25	0.50
	MP312	2.78	4.51	5.65	6.55	7.67	9.16	10.4	12.4	14.1	16.9	19.1	0.313						0.50
	MP343	3.40	5.51	6.90	8.00	9.36	11.2	12.7	15.2	17.2	20.6	23.4	0.344						0.44
	MP375	4.02	6.51	8.15	9.45	11.1	13.2	15.0	17.9	20.3	24.3	27.6	0.375						0.44
1	MP375	4.02	6.51	8.15	9.45	11.1	13.2	15.0	17.9	20.3	24.3	27.6	0.375	4.38	2.94	2.94	2.94	1.50	0.78
	MP406	4.82	7.81	9.78	11.3	13.3	15.9	18.0	21.5	24.4	29.2	33.1	0.406						0.72
	MP437	5.62	9.11	11.4	13.2	15.5	18.5	21.0	25.1	28.5	34.1	38.6	0.438						0.72
1 1/4	MP437	5.62	9.11	11.4	13.2	15.5	18.5	21.0	25.1	28.5	34.1	38.6	0.438	6.44	2.94	2.94	2.94	1.50	1.34
	MP500	7.23	11.7	14.7	17.0	19.9	23.8	27.0	32.3	36.6	43.8	49.7	0.500	6.44	3.38	3.38	3.38	2.00	
	MP531	8.03	13.0	16.3	18.9	22.1	26.4	30.0	35.9	40.7	48.6	55.2	0.531	6.44	3.38	3.38	3.38	2.00	
	MP562	8.83	14.3	17.9	20.8	24.3	29.1	33.0	39.4	44.8	53.5	60.7	0.562	6.44	3.38	3.38	3.38	2.00	
1 1/2	MP562	8.83	14.3	17.9	20.8	24.3	29.1	33.0	39.4	44.8	53.5	60.7	0.563	6.44	3.38	3.38	3.38	2.00	2.00
	MP593	10.0	16.3	20.4	23.6	27.6	33.0	37.5	44.8	50.9	6.0.8	69.0	0.594	7.25	4.38	4.38	4.38	2.25	
	MP625	10.7	17.4	21.7	25.2	29.5	35.2	40.0	47.8	54.3	64.9	73.6	0.625	7.25	4.38	4.38	4.38	2.25	
	MP656	13.0	21.0	26.4	30.6	35.8	42.7	48.5	58.0	65.8	78.6	89.3	0.656	7.25	4.38	4.38	4.38	2.25	
	MP687	13.7	22.1	27.7	32.1	37.6	44.9	51.0	61.0	69.2	82.7	93.9	0.688	7.25	4.38	4.38	4.38	2.25	

Flow Rate (GPM) = K (PSI) $^{.44}$

* Weights given are for 60°, 90° and 120°

andard Materials: Brass, 316 Stainless Steel, PVC, Polypropylene, and Teflon®. (Teflon® not available in 3/8" and 1/2" sizes). See chart on page 17 for complete list.

TFXP

Largest Free Passage

BOM# 409

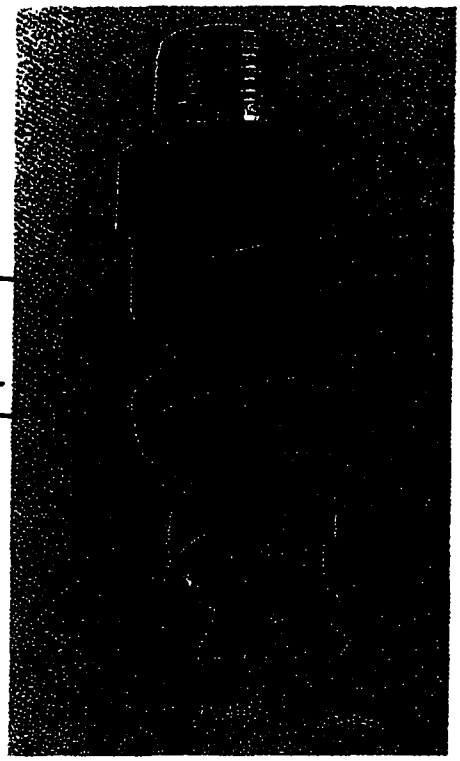

DESIGN FEATURES

- Largest free passage in original spiral design
- Passes particles equal to orifice size
- Clog-resistant
- One-piece, extra-heavy construction
- High energy efficiency
- Male connection

SPRAY CHARACTERISTICS

- Wide range of flow rates
- Fine atomization

Spray pattern: Full Cone
(Hollow Cone available by special order)
Spray angles: 90° and 120°
Flow rates: 3.0 to 3320 gpm

Full Cone 90° (XPN)

Full Cone 120° (XP)

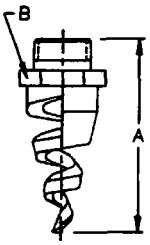

Metal

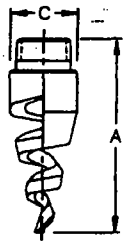

Plastic

Male Pipe Size	Nozzle Number	K Factor	GALLONS PER MINUTE @ PSI 10 PSI	20 PSI	30 PSI	40 PSI	50 PSI	60 PSI	80 PSI	100 PSI	400 PSI	Approx. Free Pass. & Orifice Dia. (in.)	Approximate Dimensions (in.) A	B	C	Wt. (lbs.) Metal	Plas.
1/2	TF24	3.81	12.1	17.0	20.9	24.1	26.9	29.5	34.1	38.1		0.38	3.50	1.13	1.06	0.41	0.06
	TF28	5.22	16.5	23.3	28.6	33.0	36.9	40.4	46.7	52.2		0.44					
1	TF40	10.6	33.5	47.4	58.0	67.0	74.9	82.1				0.63	5.25	2.00	2.00	1.56	0.25
	TF48	15.0	47.5	67.2	82.3	95.0	106	116				0.75	6.63	2.00	2.25	2.06	0.47
2	TF88	44.3	140	198								1.38	10.5	2.63	3.00	5.12	1.25
	TF96	55.9	177	250								1.50				6.31	1.25
4	TF160	166	525	[illegible]	[illegible]	[illegible]	[illegible]	[illegible]	[illegible]	[illegible]	3320	2.50**	11.5	4.50	4.50	15.6	1.87

Flow Rate (GPM) = $K\sqrt{PSI}$ **Free passage is 1.5"

Standard Materials: Brass, 316 Stainless Steel, PVC, Polypropylene and Teflon®. See chart on page 17 for complete list.

ORDER: specify pipe size, connection type, nozzle number, spray angle, and material.

Model # SA1111E-SS-K2

BULLETIN IN-110

BOM# 411

Mercoid®

SA1100 PRESSURE SWITCHES WEATHERPROOF, EXPLOSION-PROOF

Specifications – Installation and Operating Instructions

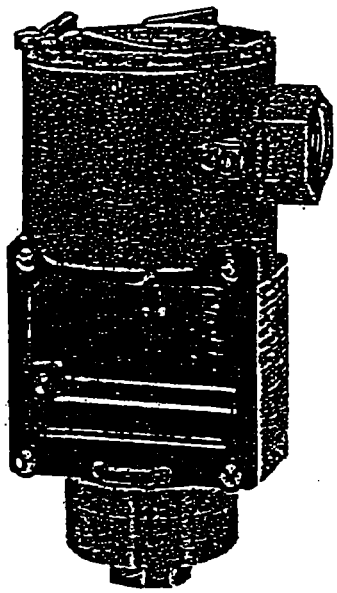

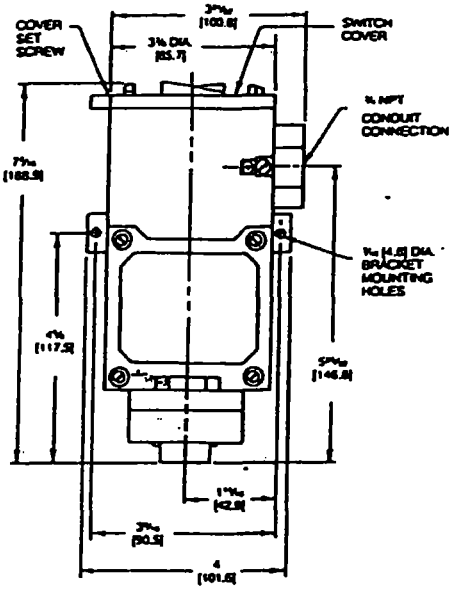

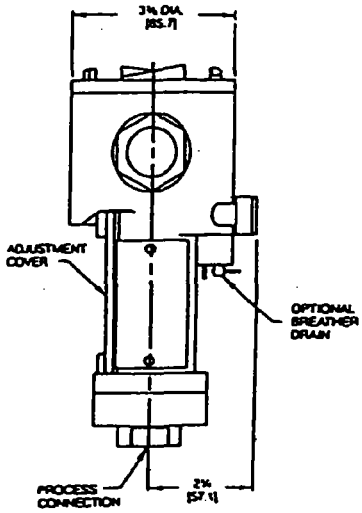

SA1100 Pressure Switches actuate one or two single pole, double throw (SPDT) snap switches in response to increasing or decreasing pressure of compatible gases or liquids. Three field adjustable operating ranges are available allowing setpoints up to 500 PSIG (35 kg/cm²). All models are weather-proof and suitable for hazardous locations as detailed in the chart at lower right. Read and understand these instructions completely before proceeding with installation or operation.

MODEL NUMBER DEFINITIONS

SA11 _①_ E②①–④⑤–_⑥_

① Operating Range	Deadband Range
11) 10-150 PSIG (0.7-10 kg/cm²)	3-75 PSIG (0.21-5.2 kg/cm²)
12) 20-250 PSIG (1.4-17.5 kg/cm²)	4-150 PSIG (0.28-10 kg/cm²)
13) 30-500 PSIG (2-35 kg/cm²)	6-300 PSIG (0.42-21 kg/cm²)

② Process Connection Material
- A – Aluminum
- B – Brass
- S – 316 Stainless Steel

③ Diaphragm and O-Ring Materials
- 4 – Buna-N
- 5 – Fluorocarbon

④ Circuit
- K – SPDT
- L – DPDT

⑤ Process Connection Size
- 1 – 1/4" NPT, female
- 2 – 1/2" NPT, female

⑥ Options
- DR – Explosion-proof Drain

PHYSICAL DATA

Temperature Limits:	–30 to 180°F (–35° to 82°C)
Maximum Pressure Without Bursting:	3000 PSIG (210 kg/cm²)
Process Connection:	1/4" or 1/2" NPT female
Electrical Ratings:	SPDT or DPDT contacts rated 15A @ 125/250/480 VAC, 1/8 HP @ 125 VAC, 1/4 HP @ 250 VAC, 1/2A @ 125 VDC resistive, 1/4A @ 250 VDC resistive.
Wiring Connections:	3 screw type
Conduit Connection:	3/4" NPT
Setpoint Adjustment:	7/16" hex nut, field adjustable
Housing Material:	Die cast aluminum
Finish:	Textured gray polyurethane
Connection Material:	Aluminum, brass or 316SS
Diaphragm:	Buna-N or fluorocarbon
Weight:	3½ lbs. (1.59 kg)

HAZARDOUS LOCATION/WEATHERPROOF RATINGS

MODEL	UL		
SA11_ E–_–_	Cl.I, Gr.B, C & D Cl.II, Gr.E, F & G NEMA-4X		
SA11_ E–_–_ DR	Cl.I, Gr.B, C & D Cl.II, Gr.E, F & G NEMA-3		

INSTALLATION

1. **Location:** Select a location where the temperature limits of −30° to 180°F (−35° to 82°C) will not be exceeded. Locate the switch as close as possible to the pressure source for best response. Long lengths of piping will not affect the accuracy of the actuation point but will increase response time.
2. **Mounting:** Avoid mounting surfaces with excess vibration which could cause false actuation when pressure is near setpoint. Attach switch with two 3/16" screws or bolts (not included) through mounting bracket. The switch must be mounted within 20° of vertical for proper operation.
3. **Pressure Connection:** The pressure connection is standard 1/4" or 1/2" NPT female. Pipe joint sealing material should be used to insure a pressure tight joint.
4. **Electrical Connections:** One or two SPDT snap switches are provided, each with normally open contacts closing and normally closed contacts opening when pressure increases beyond the high setpoint. The contacts reverse, returning to their "normal" condition when pressure decreases below the low setpoint. Wire in accordance with local electrical codes.

   For convenience, two ground screws are provided. One is located inside the housing and the other on the exterior, adjacent to the 3/4" NPT conduit connection. Replace cover after wiring connections are complete.

ADJUSTMENT

1. Determine the low and high setpoint pressures.
2. Connect tubing or piping from the pressure port on bottom to one leg of tee. Connect the second leg to a pressure gage of known accuracy and in an appropriate range. The third leg should be connected to a controllable source of pressure.
3. Connect a volt/ohm meter or other circuit tester to the snap switch terminals to indicate when switching occurs.
4. Slowly apply pressure to the system and note the pressure at which switch actuates. If adjustment is necessary, remove the clear plastic cover over the lower half of the switch. It is held in place by four machine screws.

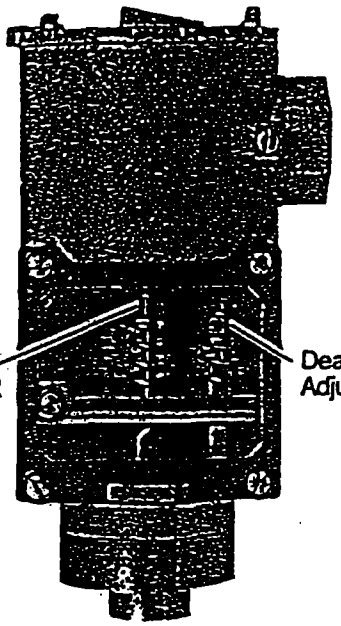

5. Adjust the low setpoint first by using a 7/16" open end wrench on the left, range spring adjustment nut. As viewed from above, turn nut clockwise to increase, counter-clockwise to decrease the low setpoint (deactuation point).
6. Adjust the high setpoint by turning the deadband spring adjustment nut, on right, clockwise to increase, counter-clockwise to decrease, the high setpoint (actuation point).
7. Operate the switch through several pressure cycles to confirm proper setpoint adjustment. Replace plastic cover.

MAINTENANCE

The moving parts of these switches need no maintenance or lubrication. The setpoint is the only user adjustment. On models with optional drain fitting, periodically rotate the small captive screw from side to side several times to keep drain path clear. Units in need of repair should be returned to the following address, freight prepaid. Be sure to include a brief explanation of the problem and any relevant application information.

Dwyer Instruments, Inc.
Attn: Repair Department
55 Ward Street
Wakarusa, IN 46503

Mercoid®
MERCOID DIV., DWYER INSTRUMENTS, INC.
P.O. Box 258
Michigan City, IN 46360

© Copyright 1992 Dwyer Instruments, Inc

LANTEC

Bridging the gap...

BOM# 413

[redacted]

between ideal mass-transfer technology and available mass-transfer technology.

NUPAC® pushes the envelope of performance to new limits by offering one of the lowest pressure-drops to mass-transfer ratios available in a random packing.

With a packing factor of 9, #2 NUPAC® not only boasts an exceptionally low pressure-drop for a random packing, it has a mass transfer capacity no greater than that of packings having surface areas, and consequently pressure-drop, ratios as high.

#2 NUPAC®, for any given application, will yield mass-transfer values (HTU, NTU) and thus packed heights, at least 30% lower than other packings in its class, while maintaining a remarkably low pressure-drop with a packing factor of 15.

Using NUPAC® can reduce equipment, operating, and maintenance costs by reducing the size, increasing the capacity, and increasing the efficiency of a mass-transfer unit.

(U.S. patent 5,798,376; worldwide patents pending)

PHYSICAL CHARACTERISTICS

	#2 NUPAC®	#1 NUPAC®
Nominal Size (in)	2.5	1.5
Void Fraction (%)	90.9	94.2
Weight (lb/ft³)		
polypropylene	5.1	3.1
PVDF	9.0	6.0
Glass-Filled PP	6.5	3.9
Geometric Surface Area (ft²/ft³)	55	40
Number of Pieces (/ft³)	125	22
Packing Factor	16	8

HYDROCHEM CORPORATION
7637 Blackberry Lane, Suite 200
Willowbrook, IL 60514
Phone (630) 325-1257 FAX (630) 325-2143

NUPAC®

LANTEC PRODUCTS, INC. 5308 Derry Ave., Unit E, Agoura Hills, CA 91301, Phone 818-707-2285, Fax 818-707-9367

BOM# 501

Technology For Solutions

GLI International

Data Sheet E33/1098

Model E33 Electrodeless Conductivity Analyzer

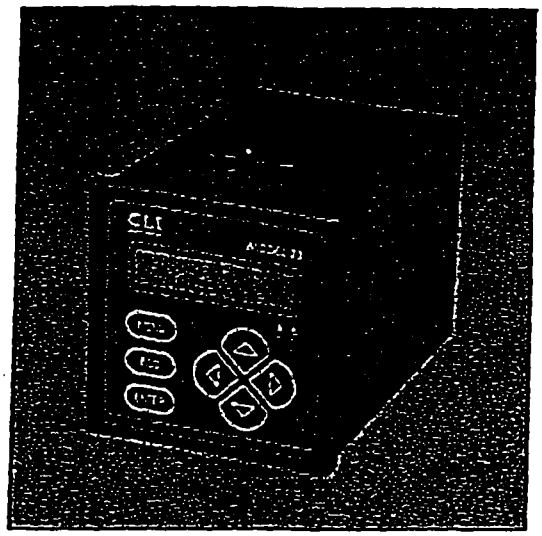

Panel-mount 1/4 DIN Style

CE

Certified Compliant to European Community Standards

■ Multiple Measurements.
The Model E33 analyzer can be selected to measure conductivity (in µS/cm, mS/cm or S/cm), concentration in %, or total dissolved solids in ppm. The parameter value and measured temperature can be displayed together or separately. Also, the values of both 0/4-20 mA analog outputs can be displayed. Front panel red LEDs indicate relay "on/off" status.

■ Backlit LCD Readout.
The two-line, 16 character backlit LCD provides excellent viewing contrast under all lighting conditions.

■ Built-in Concentration Tables.
Built-in chemical tables represent the most commonly measured solutions in various concentration ranges. Simply select the table matching your solution type and range. For other solutions, you can create a custom concentration table of up to ten data points to define it.

■ Panel-mount 1/4 DIN Case with NEMA 4X Front Panel.
The E33 is housed in a 1/4 DIN, plastic case that features a NEMA 4X front panel.

■ Multiple Language Capability.
All screens can be selected for display in English, French, German, or Spanish. (For other languages, use GLI's optional software tool kit to create an ASCII-character conversion table for installation by GLI.)

■ "Menu-guided" Operation.
The simple keypad and logical menu structure make this analyzer easy to use. Menu screens guide you through setup, calibration, operation, and test/maintenance functions.

■ Electromagnetic Conformance.
The analyzer exceeds U.S. and meets European standards for EMI and RFI.

■ Simple Interactive Diagnostics.
Built-in diagnostics continuously tests analyzer and sensor operation.

■ Four Temp. Comp. Methods.
Select from linear slope (% per °C), built-in natural water temperature properties table or, for special solution compensation requirements, you can create a custom temperature table of up to ten data points to provide accurate temperature-compensated measurements. A "no compensation" mode is also provided.

■ Multiple Calibration Methods.
After zeroing the measurement system for the first time, calibrate using the traditional wet, 1-POINT method. When measuring % concentration, choose between entering a % concentration value or a conductivity value.

■ Two 0/4-20 mA Analog Outputs.
Each of the two isolated analog outputs can be set to 0-20 mA or 4-20 mA, and independently assigned to represent the selected parameter (conductivity, % concentration, or TDS) or the measured temperature. During calibration, both outputs can be held at their present values, transferred to preset values, or remain active to respond to the measured value.

■ Passcode-protected Access.
For security, use the E33's passcode capability to restrict access to configuration settings and calibration to only authorized personnel.

■ OEM Versions Available.
These analyzers can be manufactured to accommodate OEM-specific needs.

ELECTRODELESS CONDUCTIVITY

Specifications

Operational:

Display ..... Two-line by 16 character backlit LCD

NOTE: The measured value (conductivity, % concentration, or TDS) or temperature can be separately displayed, or both measurements can be shown together on a single screen. Both analog output values can also be displayed on one screen.

Measurement	Selectable Ranges
Conductivity	µS/cm: 0-200.0 or 0-2000
	mS/cm: 0-2.000, 0-20.00, 0-200.0, or 0-2000
	S/cm: 0-2.000
% Concentration	0-99.99% or 0-200.0%
TDS	0-9999 ppm
Temperature	-20.0 to +200.0°C or -4.0 to 392.0°F
mA Outputs (#1 and #2)	0.00-20.00 mA or 4.00-20.00 mA

Ambient Conditions ..... Operation: -4 to +140°F (-20 to +60°C); 0 to 95% relative humidity, non-condensing
Storage: -22 to +158°F (-30 to +70°C); 0 to 95% relative humidity, non-condensing

Relays:

Types/Outputs ..... Two electromechanical relays; SPDT (Form C) contacts; U.L. rated 5A 115/230 VAC, 5A @ 30 VDC resistive

Operational Mode ..... Each relay (A and B) can be assigned to be driven by the selected parameter (conductivity, % concentration, or TDS), measured temperature, or by a detected system "fail" diagnostic condition

Function Modes: Control ..... Settings for high/low phasing, setpoint, deadband, overfeed timer, off delay, and on delay

Alarm ..... Settings for low alarm point, low alarm point deadband, high alarm point, high alarm point deadband, off delay, and on delay

Status ..... Not configurable; relay only activates when a "fail" diagnostic WARNING condition exists

Indicators ..... Relay A and B LEDs indicate respective relay on/off status

Temperature Compensation ..... Automatic or manual, 14.0 to 392.0°F (-10.0 to +200.0°C), with selection for Pt 1000 ohm RTD temperature element or a manually entered value

NOTE: Depending on the selected parameter (conductivity, % concentration, or TDS), not all of the following temperature compensation methods are available:

Linear % per °C slope, built-in natural water temperature properties table, user-entered temperature table, or no compensation

Sensor-to-Analyzer Distance ..... Maximum cable length is a function of the measuring range and allowable non-linearity. The following schedule is recommended:

Full-scale Range	Maximum Length
200 to 2000 µS/cm	200 ft. (61 m)
2000 to 2,000,000 µS/cm	300 ft. (91 m)

NOTE: When measuring % concentration, convert the analyzer full-scale value to conductivity to determine the maximum distance.

Power Requirements ..... 90-130 VAC, 50/60 Hz. (10 VA max.) or 190-260 VAC, 50/60 Hz. (10 VA max.)

Calibration Methods:

1-POINT COND (or CONC or TDS) ..... Enter one reference solution or sample value (determined by laboratory analysis or a comparison reading).

ZERO ..... With the dry sensor in air, press keys to initiate automatic system zeroing.

Analog Outputs ..... Two outputs (#1 and #2) each with 0.001 mA (12-bit) resolution:

Output #1: Isolated 0-20 mA or 4-20 mA (selectable); 600 ohms maximum load
Output #2: Isolated 0-20 mA or 4-20 mA (selectable); 600 ohms maximum load

NOTE: Each output can be assigned to represent the selected parameter (conductivity, % concentration, or TDS) or measured temperature. Parameter values can be entered to define the endpoints at which the minimum and maximum mA output values are desired. During calibration, both outputs can be selected to hold their present values, transfer to preset values to operate control elements by an amount corresponding to those values, or remain active to respond to the measured value.

Memory Backup (non-volatile) ..... All user settings are retained indefinitely in memory (EEPROM)

EMI/RFI Conformance ..... Exceeds US and meets European standards for conducted and radiated emissions and immunity; certified CE compliant for applications as specified by EN 50081-2 for emissions and EN 50082-2 for immunity

Electrical Certifications:

General Purpose (pending) ..... UL, C-UL, FM, and DEMKO

Division 2 (pending) ..... UL, C-UL and FM: Groups A, B, C, D, F, and G

Zone 2 (pending) ..... DEMKO: Group IIC

Analyzer Performance (Electrical, Analog Outputs):

Accuracy ..... 0.5% of span*

Stability ..... 0.2% of span per 24 hours, non-cumulative*

Repeatability ..... 0.1% of span or better*

Temperature Drift ..... Zero and Span: less than 0.02% of span per °C*

These typical performance specifications are:

1. *Based on 25 °C with conductivity of 500 µS/cm and higher. Consult GLI for applications in which conductivities are less than 500 µS/cm.*
2. *Derated above 100 °C to the maximum displayed temperature of 200 °C. Consult GLI for details.*

Mechanical:

Enclosure ..... Polycarbonate with NEMA 4X front panel; general purpose; two zinc-plated steel brackets for panel mounting

Mounting Configuration ..... Panel mounting

Weight ..... 1.7 lbs. (0.8 kg) approximately

Ordering Information

MODEL NUMBER

E33 Electrodeless conductivity/% concentration/TDS analyzer in 1/4 DIN panel mount case with NEMA 4X front panel. Includes two brackets with adjustable screws for panel mounting.

RESERVED CATEGORIES

COMPANY ID NAMEPLATE

- N GLI Nameplate
- B Customer-specified Nameplate (see Note 1)
- C No Nameplate

EQUIPMENT TAGGING (specify tag data)

- N None
- P Paper
- S Stainless steel

E33	A1	N	N	Product Number

Choose item from last category.

NOTE 1: The nameplate cannot be printed with a company logo. Please specify the desired name which is printed in only capital letters.

Model E33 Accessories:

- **Electrodeless Conductivity Sensors:** Refer to data sheet 3700E for details.
- **Software Tool Kit 1000G3311:** This kit is for use with an IBM-compatible PC. The software can create and download multiple sets of analyzer configuration values. Also, its language tool can be used to create language conversion tables (ASCII characters only) for installation by GLI. The kit includes a GLI software diskette and ten-foot cable terminated with an RS-232 connector and stripped/tinned wires for connection to the analyzer.

Engineering Specification

1. The microprocessor-based analyzer shall accept any GLI Model 3700E-series electrodeless conductivity sensor.
2. The analyzer shall measure the selected parameter (conductivity, % concentration, or TDS) and process temperature.
3. The analyzer shall be configurable for multiple languages.
4. The analyzer shall have a two-line by 16 character backlit LCD. It shall display the measured value and temperature on separate screens, or both measurements together on one screen. The values of both analog outputs shall also be displayed on one screen.
5. The analyzer shall have these calibration methods:
   a) 1-POINT Method: Enter one reference solution value or one sample value (determined by laboratory analysis or comparison reading). When measuring % concentration, the value can be a % concentration value or a conductivity value.
   b) ZERO Method: With the dry sensor in air, press keys to initiate automatic system zeroing.
6. The analyzer shall have a passcode to restrict access to configuration settings and calibration to only authorized personnel.
7. The analyzer shall have built-in chemical tables representing the most commonly measured solutions in various concentration ranges. For other solutions, the analyzer shall enable the user to create a custom concentration table of up to ten data points to define the solution.
8. Depending on the selected parameter (conductivity, % concentration, or TDS), the analyzer shall provide one or more of the following temperature compensation methods:
   a) Linear slope (% per °C).
   b) Built-in natural water properties table.
   c) User-defined temperature table of up to ten data points for special solution compensation requirements.
   d) No compensation.
9. The analyzer shall have relays that can be selected to function as dedicated system diagnostic alarm relays to alert the operator when a "fail" diagnostic WARNING condition exists.
10. The analyzer shall have user-test diagnostics for outputs, relays, and alarm LEDs without requiring special test equipment.
11. The analyzer shall be computer configurable using its RS-232 port and GLI's optional software tool kit.
12. The analyzer shall have two isolated 0/4-20 mA analog outputs. Each output can be assigned to represent the selected parameter (conductivity, % concentration, or TDS) or measured temperature. Parameter values can be entered to define the endpoints at which the minimum and maximum mA output values are desired. During calibration, both outputs can be selected to hold their present values, transfer to preset values to operate control elements by an amount corresponding to those values, or remain active to respond to the measured value.
13. The analyzer shall be GLI International, Inc. Model E33.

Dimensions

Inches (mm)

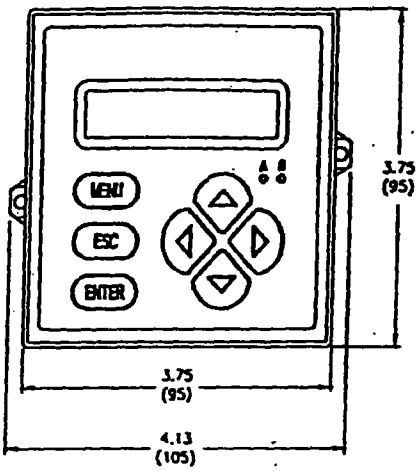

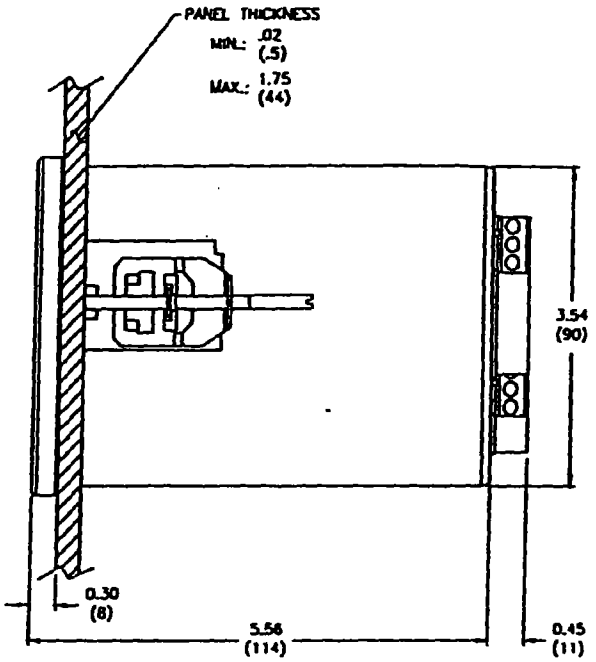

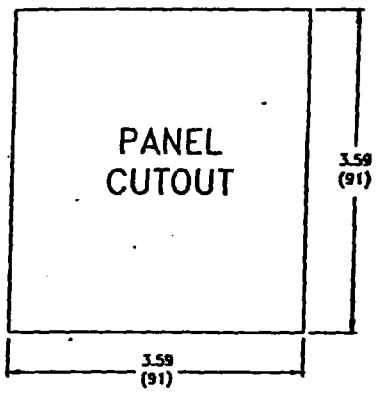

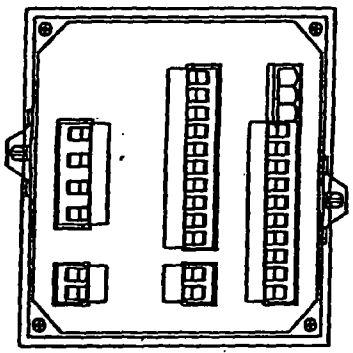

NOTE: ALL DIMS INCHES (mm)

BACK VIEW OF ANALYZER

Data Sheet E33

Worldwide Sales:
GLI International, Inc.
9020 West Dean Road
Milwaukee, Wisconsin 53224, U.S.A.
phone: [414] 355-3601
fax: [414] 355-8346
e-mail: info@gliint.com

European Sales:
GLI International Ltd
Eastman Way, Hemel Hempstead
Hertfordshire, HP2 7HB, England
phone: 01442 229310
fax: 01442 229311
e-mail: gli@gli.co.uk

In the interest of improving and updating its equipment, GLI reserves the right to alter specifications to equipment at any time.
A Member of the Environmental Instrumentation Group

Technology For Solutions

BOM# 502

GLI International

Data Sheet 3700E/798
Supersedes 3600E/398

Model 3700E-series Electrodeless Conductivity Sensors

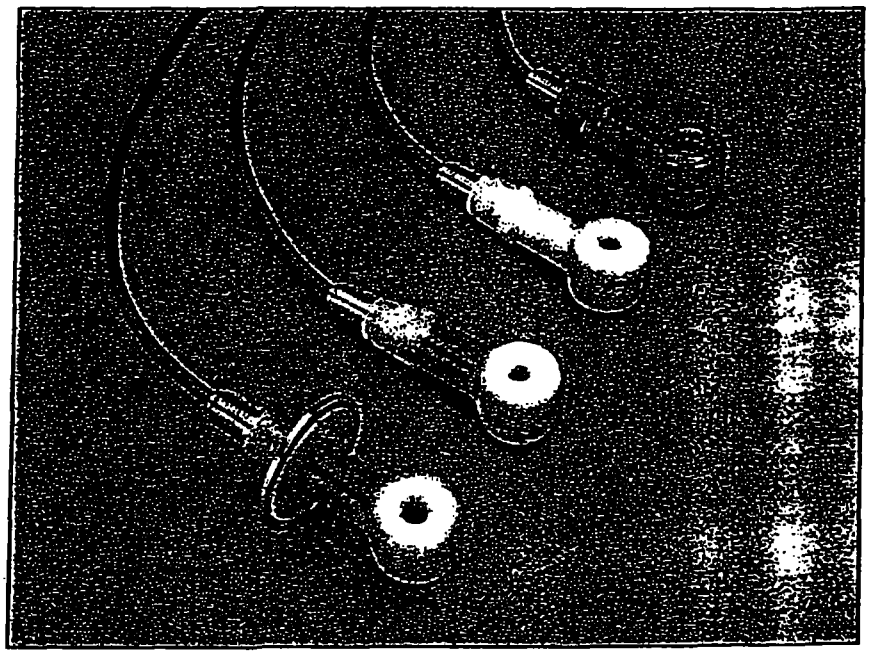

Sanitary (CIP) Flange Style (bottom left) and Convertible Style
(body materials available in polypropylene, PVDF, PEEK, and PFA Teflon)

■ Wide Measuring Range.
The 3700E-series sensors measure from 0-200 microSiemens/cm up to 0-2,000,000 microSiemens/cm. A built-in Pt 1000 RTD compensates the measured conductivity for changes in process temperature.

■ Polypropylene, PVDF, PEEK, or PFA Teflon Wetted Body Material.
Chemical resistance problems are simplified because only one wetted material contacts the process media. Furthermore, the wetted material is non-conductive to electrically isolate the sensor from the process fluid, eliminating ground loops that can affect measurement accuracy.

■ Low-maintenance Design.
The electrodeless sensor design eliminates polarization and electrode coating problems that commonly affect conventional contacting electrode-type conductivity sensors.

■ Convertible Sensor Style.
The convertible style sensor can be directly fastened to the end of a pipe for immersion mounting or, by using a special GLI union-mount adapter, it can be mounted into any standard 2 inch NPT fitting (tee, weldolet, pipe saddle, etc.). The convertible style sensor can also be insertion mounted into a 2-inch ball valve assembly.

■ Sanitary Clean-in-place Flange Sensor Style.
The sanitary (CIP) flange sensor style is constructed of materials that conform to the provisions of 3-A Sanitary Standards. It is designed to withstand CIP cleaning requirements, making it suitable for dairy, food, and beverage industry applications. The sanitary style sensor has an integral 2-inch sanitary-mount flange, and includes a special cap and EPDM compound gasket.

3-A

Specifications

Wetted Materials ..... Polypropylene, PVDF, PEEK or PFA Teflon
Operating Temperature Range..... -10 to 125°C (14 to 257°F)
Maximum Flow Rate ..... 10 ft. (3 m) per second
Measuring Range..... From 0-200 microSiemens/cm up to 0-2,000,000 microSiemens/cm
Temperature Compensator ..... Pt 1000 RTD
Sensor Cable ..... 5 conductor (plus two isolated shields) cable with XLPE (cross-linked polyethylene) jacket; rated to 150°C (302°F); 20 ft.(6 m) long

Pressure/Temperature Limits:

Sensor Only (no hardware) ..... Polypropylene: 100 psi at 212°C (6.9 bar at 100°C)
PVDF: 100 psi at 248°F (6.9 bar at 120°C)
PEEK: 200 psi at 302°F (13.8 bar at 150°C)
PFA Teflon: 200 psi at 302°F (13.8 bar at 150°C)

Sensor With Hardware* ..... See graphs below for specific GLI sensor and mounting hardware combinations

CPVC Mounting Hardware

(All Sensor Materials)

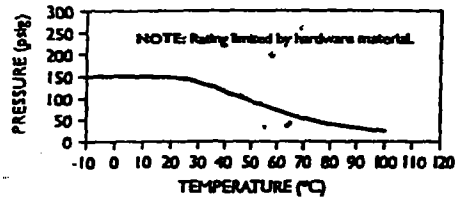

304 Stainless Steel Sanitary Mounting Hardware▲

With Polypropylene Sensor

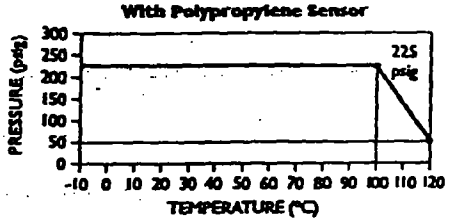

PVDF Mounting Hardware

(All Sensor Materials)

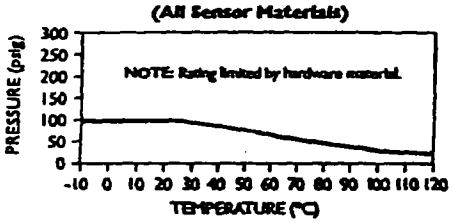

With PVDF Sensor

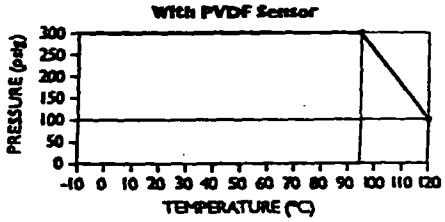

316 Stainless Steel Mounting Hardware

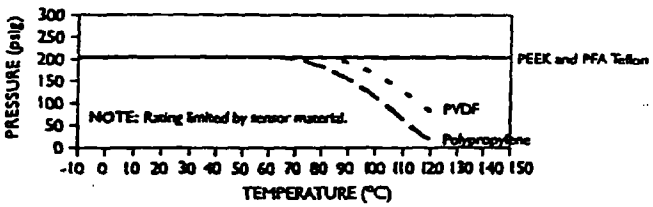

With PFA Teflon Sensor

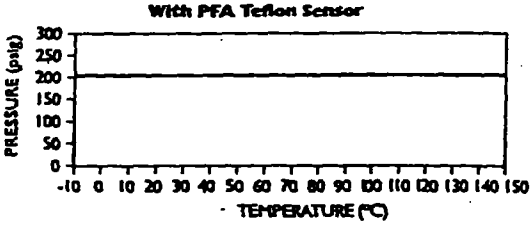

* Ratings for the above GLI sensor and mounting hardware combinations are based upon water service. More severe service may require a correction factor.

▲ Sanitary hardware ratings are for MH048S8S hardware using the 9H1132 heavy duty sanitary clamp. Other hardware and clamp combinations may reduce the listed ratings.

Engineering Specification

1. The electrodeless conductivity sensor shall measure from 0-200 to 0-2,000,000 microSiemens/cm, and shall have a built-in Pt 1000 RTD element to compensate measured conductivity for changes in process temperature.
2. The sensor shall be constructed of only one wetted body material which shall be polypropylene, PVDF, PEEK or PFA Teflon.
3. The sensor cable shall be water resistant and rated to 150°C (302°F).
4. The sensor shall have a 1/2-inch nominal diameter bore for operation in slurries.
5. The sensor shall be a:
   a) Convertible style that can be directly fastened onto the end of a pipe for immersion mounting or, by using a special GLI union-mount adapter, mounted into any 2-inch NPT fitting (tee, weldolet, pipe saddle, etc.). The convertible style sensor can also be insertion mounted into a 2-inch ball valve assembly.
   b) Sanitary style with materials that conform to the provisions of 3-A Sanitary Standards to withstand CIP cleaning, and with an integral 2-inch sanitary-mount flange to mount into a standard 2-inch sanitary tee.
6. The sensor shall be GLI International, Inc. Model 3700E-series.

FIGURE 1 Immersion Mount Hardware

(for use with convertible style sensor)

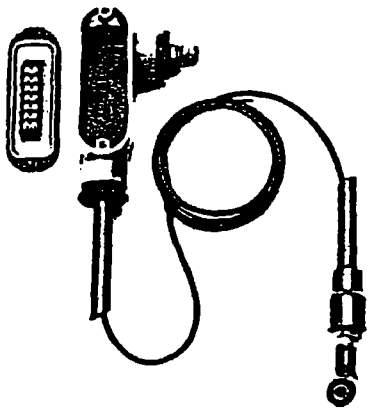

Part Number	Description
~~MH432G~~	~~CPVC pipe (1/2 inch dia. by 4 ft/1.2 m long) and coupling with PVC pipe mount j-box~~
~~MH462G~~	~~PVDF pipe (1/2 inch dia. by 4 ft/1.2 m long) and coupling with PVC pipe mount j-box~~

NOTE: Hardware does not include the sensor or interconnect cable. They must be ordered separately.

FIGURE 2 Union Mount Hardware

(for use with convertible style sensor)

Part Number	Description
~~MH510N3NZ~~	~~316 SS union adapter and standard 2-inch tee~~
~~MH510M3NZ~~	~~316 SS union adapter only (no tee)~~
MH538N3NZ	CPVC union adapter and standard 2-inch tee
~~MH538M3NZ~~	~~CPVC union adapter only (no tee)~~
~~MH568N3NZ~~	~~PVDF union adapter and standard 2-inch tee~~
~~MH568M3NZ~~	~~PVDF union adapter only (no tee)~~

NOTE: Hardware does not include the sensor, junction box or interconnect cable. They must be ordered separately.

FIGURE 3 Sanitary Mount Hardware

(for use with sanitary style sensor)

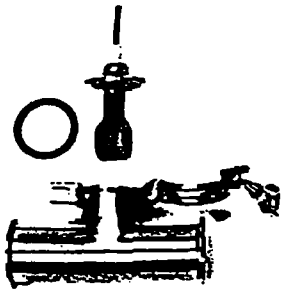

Part Number	Description
~~MH048S8SZ~~	~~304 SS sanitary 2-inch tee and heavy duty clamp~~

NOTE: Hardware does not include the sensor, junction box or interconnect cable. They must be ordered separately. The sanitary sensor includes a special cap and EPDM compound gasket.

Ordering Information

Electrodeless Conductivity Sensors

Product No.	Sensor Style	Wetted Material
3705E2T	Sanitary	Polypropylene
3706E2T	Sanitary	PVDF
3708E2T	Sanitary	PFA Teflon
3725E2T	Convertible	Polypropylene
3726E2T	Convertible	PVDF
3727E2T	Convertible	PEEK
3728E2T	Convertible	PFA Teflon

NOTES: 1. The standard sensor cable length is 20 ft. (6 m). To order a sensor with a non-standard cable length, specify the required length in whole feet.

2. To order a sensor that complies with CE requirements, specify the sensor product number and add the suffix "-CE."

Model 3700E Sensor Accessories:

- **Interconnect Cable 1W1100**

  This 6-conductor cable must be used for connecting between a junction box and the analyzer. It has two isolated shield wires, enabling one to be tied to earth ground for optimum EMI shielding. The cable has a cross-linked polyethylene jacket rated to 150°C. Specify the required length in whole feet. The cable is supplied unfinished (ends not stripped or tinned). This cable replaces the 99X1W4000 cable which is no longer available.

  NOTE: Any other type of cable will degrade measurement performance.

- **Junction Box 60A2053**

  This aluminum junction box includes a cover with internally attached terminal strip, and cover gasket seal.

- **Spare Sanitary Clamp 9H1132**

  This heavy duty 2-inch wing nut clamp, normally included with MH048S8SZ sanitary hardware, secures the sensor.

- **Spare Special Cap 70F1037-001**

  This special cap, normally included with sanitary sensor, is used with MH048S8S sanitary hardware to mount the sensor.

- **Spare Sanitary Gasket 9H1327**

  This EPDM compound gasket, normally included with sanitary sensor, is used with MH048S8S sanitary hardware to provide the mounting seal.

Dimensions

Inches [mm]

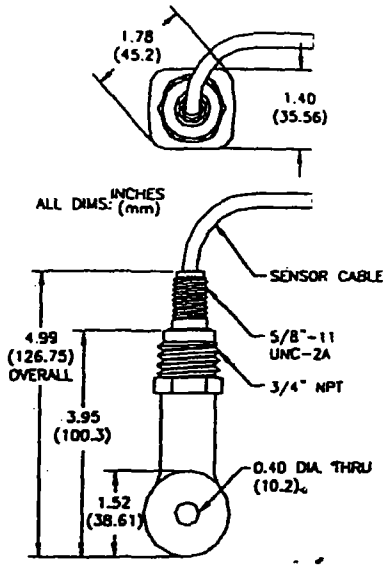

Convertible Style Sensor

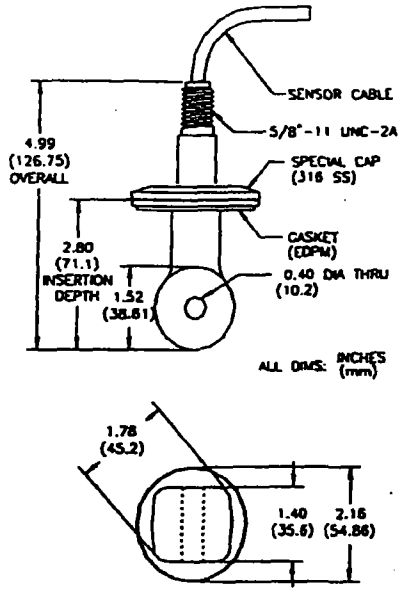

Sanitary Style Sensor

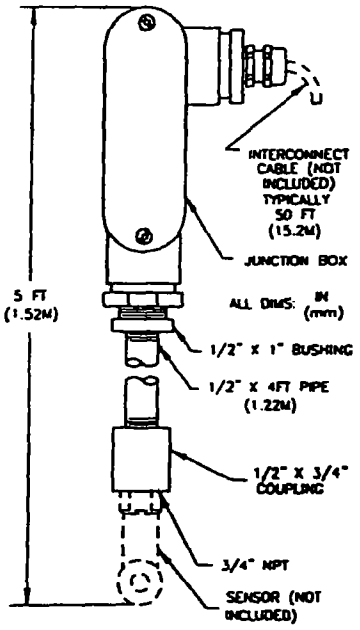

Immersion Mounting

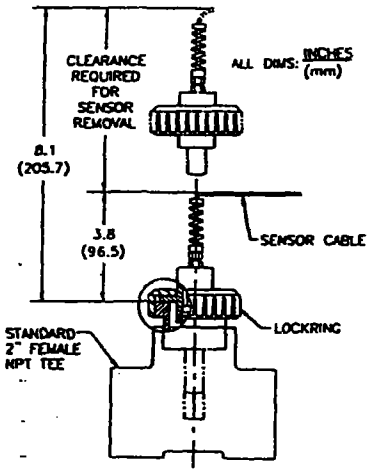

2-inch NPT Tee Mounting

(requires GLI union-mount adapter)

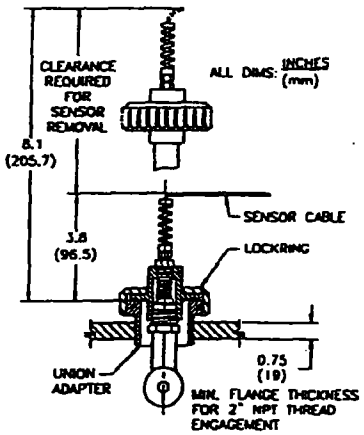

2-inch NPT Flange Mounting

(requires GLI union-mount adapter)

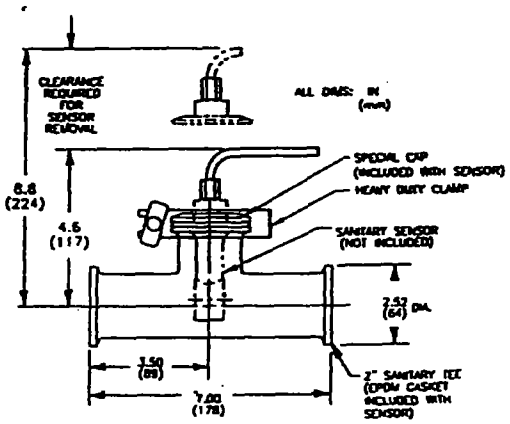

Sanitary (CIP) Flange Mounting

Data Sheet 3700E

Worldwide Sales:
GLI International, Inc.
9020 West Dean Road
Milwaukee, Wisconsin 53224, U.S.A.
phone: [414] 355-3601
fax: [414] 355-8346
e-mail: info@gliint.com

European Sales:
GLI International Ltd
Eastman Way, Hemel Hempstead
Hertfordshire, HP2 7HB, England
phone: 01442 229310
fax: 01442 229311
e-mail: gli@gli.co.uk

In the interest of improving and updating its equipment, GLI reserves the right to alter specifications to equipment at any time.
A Member of the Environmental Instrumentation Group

BOM# 504

Technology For Solutions

GLI International

Data Sheet PR33/498
Supersedes PR33/1197

Model P33 pH and ORP Analyzer

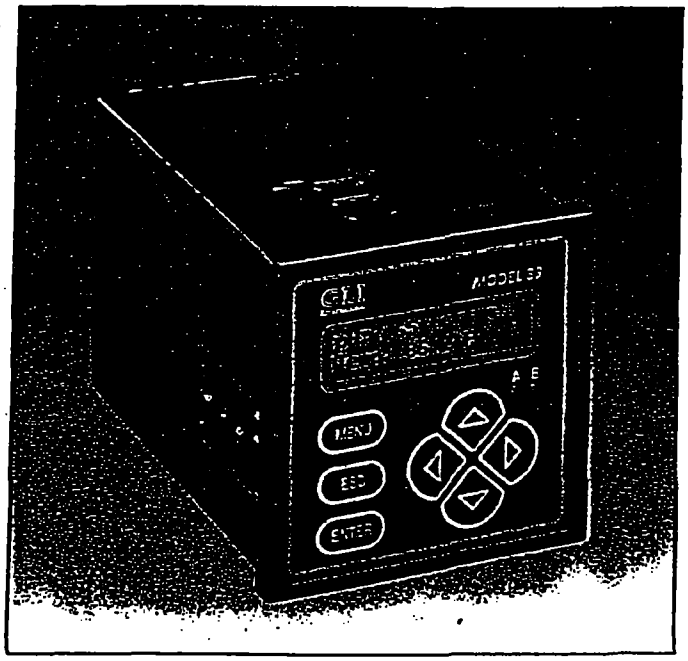

Panel-mount 1/4 DIN Style

■ Multiple Measurements.
The Model P33 displays measured pH (or ORP) and temperature separately or together. Both analog outputs can also be selected for display. Front panel red LEDs indicate relay "on/off" status.

■ Backlit LCD Readout.
The two-line, 16 character backlit LCD provides excellent viewing contrast under all lighting conditions.

■ Panel-mount 1/4 DIN Case with NEMA 4X Front Panel.
The P33 is housed in a 1/4 DIN, plastic case that features a NEMA 4X front panel.

■ Electromagnetic Conformance.
The analyzer exceeds U.S. and meets European standards for EMI and RFI.

■ Multiple Language Capability.
All screens can be selected for display in English, French, German, or Spanish. (For other languages, use GLI's optional software tool kit to create an ASCII-character conversion table for installation by GLI.)

■ "Menu-guided" Operation.
The simple keypad and logical menu structure make this analyzer easy to use. Menu screens guide you through setup, calibration, operation, and test/maintenance functions.

■ Passcode-protected Access.
For security, use the P33's passcode capability to restrict access to configuration settings and calibration to authorized personnel only.

■ OEM Versions Available.
These analyzers can be manufactured to accommodate OEM-specific needs.

■ GLI Differential Sensor or Conventional Combination Electrode Compatibility.
The Model P33 can be used with any GLI 5-wire Differential Technique pH or ORP sensor, or any conventional combination electrode. The P33 accepts Pt 1000 RTD, Pt 100 RTD, or NTC 300 ohm thermistor temperature compensators.

■ Two 0/4-20 mA Analog Outputs.
Each of the two isolated analog outputs can be set to 0-20 mA or 4-20 mA, and assigned to represent the measured pH (or ORP) or temperature. During calibration, both outputs can be held at their present values, transferred to preset values, or remain active to respond to the measured value.

■ Simple Interactive Diagnostics.
Built-in diagnostics continuously tests analyzer and sensor operation.

Specifications

Operational:

Display ..... Two-line by 16 character backlit LCD

NOTE: The measured pH (or ORP) and temperature can be separately displayed, or both measurements can be displayed together on one screen. Also, both analog outputs can be displayed together on a screen.

Measurement	Selectable Ranges
pH	-2.0 to 14.0 pH or -2.00 to 14.00 pH
ORP	-2100 to +2100 mV
Temperature	-4.0 to +392.0°F or -20.0 to +200.0°C
mA Outputs (#1 and #2)	0.00-20.00 mA or 4.00-20.00 mA

Ambient Conditions ..... Operation: -4 to +140°F (-20 to +60°C); 0 to 95% relative humidity, non-condensing
Storage: -22 to +158°F (-30 to +70°C); 0 to 95% relative humidity, non-condensing

Relays:
- Types/Outputs ..... Two electromechanical relays; SPDT (Form C) contacts; U.L. rated 5A 115/230 VAC, 5A @ 30 VDC resistive
- Functional Modes ..... Each relay (A and B) can be assigned to be driven by the measured pH (or ORP) or temp.
- Operating Modes ..... Control: Settings for high/low phasing, setpoint, deadband, overfeed timer, off delay, and on delay
  Alarm: Settings for low alarm point, low alarm point deadband, high alarm point, high alarm point deadband, off delay, and on delay
- Indicators ..... Relay A and B LEDs indicate respective relay status

Temperature Compensation ..... Automatic or manual, 14.0 to 230.0°F (-10.0 to +110.0°C), with selection for temperature compensator (Pt 1000 ohm RTD, Pt 100 ohm RTD, or NTC 300 ohm thermistor used in GLI Differential sensors); selectable pure water automatic compensation from 0.0-50.0°C

Sensor-to-Analyzer Distance:
- GLI 5-wire Differential Technique Sensor ..... 3000 ft. (914 m) maximum
- Conventional Combination Electrode with Preamplifier ..... 985 ft. (300 m) maximum
- Conventional Combination Electrode without Preamplifier ..... 100 ft. (30 m) max. with electrode cable capacitance of less than 30 pF/foot

Power Requirements ..... 90-130 VAC, 50/60 Hz. (10 VA max.) or 190-260 VAC, 50/60 Hz. (10 VA max.)

Calibration Methods:
- 2-point Buffer Method* (pH only) ..... Immerse sensor in first buffer (predefined as GLI or DIN standard value). Press keys to initiate. Analyzer waits for pH and temperature signals to stabilize, and automatically calibrates the point. Repeat procedure using a second buffer to calibrate the second point.
- 1-point Buffer Method* (pH only) ..... Immerse sensor in buffer (predefined as GLI or DIN standard value). Press keys to initiate. Analyzer waits for pH and temperature signals to stabilize, and automatically calibrates the point.

**When using a buffer type other than GLI or DIN, calibrate using the 2-point or 1-point Sample Method respectively.*

- 2-point Sample Method (pH only) ..... Enter two sample values (derived by laboratory analysis or comparison reading) or two user-supplied buffer values.
- 1-point Sample Method (pH & ORP) ..... Enter one sample value (derived by laboratory analysis or comparison reading), one reference solution value, or one user-supplied buffer value.

Outputs: Analog ..... Two outputs (#1 and #2) each with 0.004 mA (12-bit) resolution:
Output #1: Isolated 0-20 mA or 4-20 mA (selectable); 600 ohms maximum load
Output #2: Isolated 0-20 mA or 4-20 mA (selectable); 600 ohms maximum load

NOTE: Each output can be assigned to represent the measured pH (or ORP) or temperature. Associated values can be entered to define the endpoints at which the minimum and maximum mA output values are desired. During calibration, both outputs can be selected to hold their present values, transfer to preset values to operate control elements by an amount corresponding to those values, or remain active to respond to the measured value.

Digital Communication ..... RS-232 enables P33 configuration using an IBM-compatible PC with GLI's opt. software tool kit

Memory Backup (non-volatile) ..... All user settings are retained indefinitely in memory (EEPROM)

EMI/RFI Conformance ..... Exceeds U.S. and meets European standards for conducted and radiated emissions and immunity; certified CE compliant for applications as specified by EN 50081-2 for emissions and EN 50082-2 for immunity

Electrical Certifications:
- General Purpose (pending) ..... UL, C-UL, FM, and DEMKO
- Division 2 (pending) ..... UL, C-UL, and FM: Groups A, B, C, D, F, and G
- Zone 2 (pending) ..... DEMKO: Group IIC

Specifications (continued)

Analyzer Performance (Electrical, Analog Outputs):

Accuracy	0.1% of span
Stability	0.05% of span per 24 hrs., non-cumulative
Repeatability	0.1% of span or better
Temperature Drift	Zero: less than 0.03% of span per °C Span: less than 0.03% of span per °C

Mechanical:

Enclosure	Polycarbonate with NEMA 4X front panel; general purpose; two zinc-plated steel brackets for panel mounting
Mounting Configuration	Panel mounting
Net Weight	1.7 lbs. (0.8 kg) approximately

Ordering Information

MODEL NUMBER

P33 pH analyzer (also selectable for ORP measurement) in 1/4 DIN panel mount case with NEMA 4X front panel. Includes two brackets with adjustable screws for panel mounting.

RESERVED CATEGORIES

COMPANY ID NAMEPLATE

- **N** GLI Nameplate
- **B** Customer-specified Nameplate (see note below)
- **C** No Nameplate

EQUIPMENT TAGGING (specify tag data)

- **N** None
- **P** Paper
- **S** Stainless steel

P33	A1	N	N	Product Number

Choose item from last category.

NOTE: *The nameplate cannot be printed with a company logo. Please specify the desired name which is printed in only capital letters.*

Accessories (ordered separately):

- **Sensors:** Refer to data sheets LCP, Epoxy, 6000P0, FTA, SCS, 6300, RP6300M, and 6314.
- **Software Tool Kit 1000G3311:** The kit is for use with an IBM-compatible PC. The software can create and download multiple sets of analyzer configuration values, and its language tool can be used to create language conversion tables (ASCII characters only) for installation by GLI. The kit includes a GLI software diskette and ten-foot cable terminated with an RS-232 connector and stripped/tinned wires for connection to the analyzer.

Engineering Specification

1. The microprocessor-based analyzer shall accept any GLI 5-wire Differential Technique pH or ORP sensor, or any conventional combination electrode. The analyzer shall accept Pt 1000 RTD, Pt 100 RTD, and NTC 300 ohm thermistor temperature compensators.
2. The analyzer shall be software selectable to measure pH or ORP, and configurable for multiple languages.
3. The analyzer shall have a two-line by 16 character backlit LCD. It shall display measured pH (or ORP) and temperature on separate screens, or both measurements together on one screen. Both analog outputs shall be displayed together on a screen.
4. The analyzer shall have these calibration methods:
   a) 2-point Buffer Method (pH only): Immerse sensor in first buffer (predefined as GLI or DIN standard value). Press keys to initiate. Analyzer waits for pH and temperature signals to stabilize, and automatically calibrates the point. Repeat procedure using a second buffer to calibrate the second point.
   b) 1-point Buffer Method (pH only): Same as method above except analyzer calibrates only one point using one buffer.
   c) 2-point Sample Method (pH only): Enter two sample values derived by laboratory analysis or comparison reading.
   d) 1-point Sample Method (pH and ORP): Same as method above except requires entry of only one value.
5. The analyzer shall have a passcode to restrict access to configuration settings and calibration to authorized personnel only.
6. The analyzer shall have user-test diagnostics for outputs, relays, and alarm LEDs without requiring special test equipment.
7. The analyzer shall be computer configurable using its RS-232 port and GLI's optional software tool kit.
8. The analyzer shall have two isolated 0/4-20 mA analog outputs. Each output can be assigned to represent the measured pH (or ORP) or temperature. Associated values can be entered to define the endpoints at which the minimum and maximum mA output values are desired. During calibration, both outputs can be selected to hold their present values, transfer to preset values to operate control elements by an amount corresponding to those values, or remain active to respond to the measured value.
9. The analyzer shall be GLI International, Inc. Model P33.

Dimensions

Inches (mm)

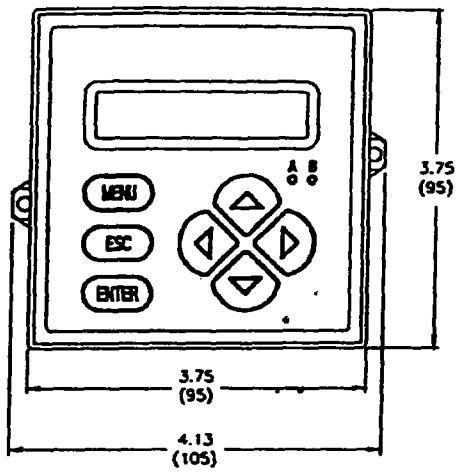

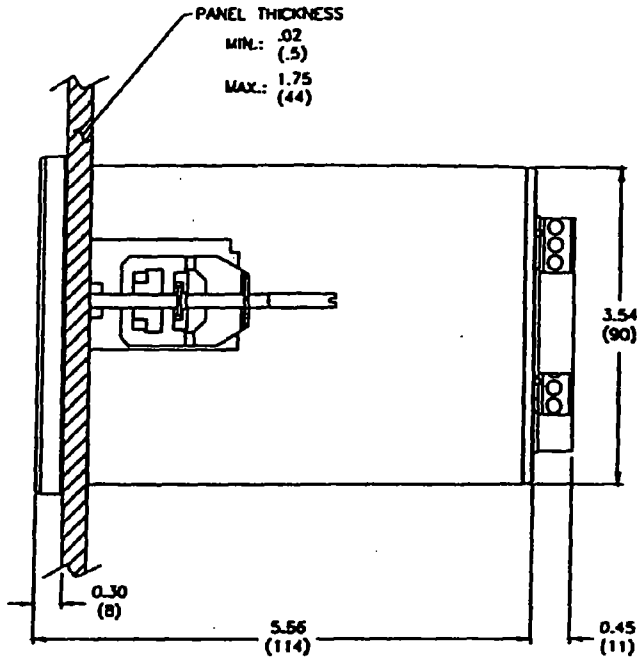

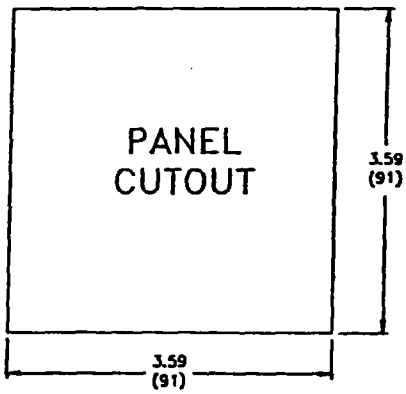

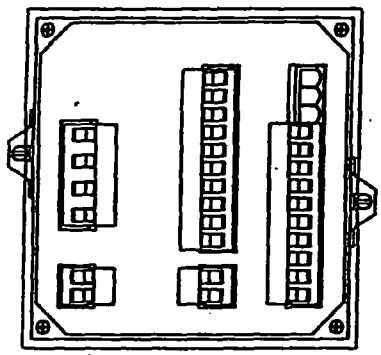

BACK VIEW OF ANALYZER

NOTE: ALL DIMS INCHES (mm)

Data Sheet PR33

Worldwide Sales:
GLI International, Inc.
9020 West Dean Road
Milwaukee, Wisconsin 53224, U.S.A.
phone: [414] 355-3601
fax: [414] 355-8346
e-mail: info@gliint.com

European Sales:
GLI International Ltd
Eastman Way, Hemel Hempstead
Hertfordshire. HP2 7HB, England
phone: 01442 229310
fax: 01442 229311
e-mail: gli@gli.co.uk

In the interest of improving and updating its equipment, GLI reserves the right to alter specifications to equipment at any time.
A Member of the Environmental Instrumentation Group

Technology For Solutions

BOM# 505

GLI International

Data Sheet LCP/298
Supersedes LCP/696

LCP-encapsulated pH and ORP Sensors

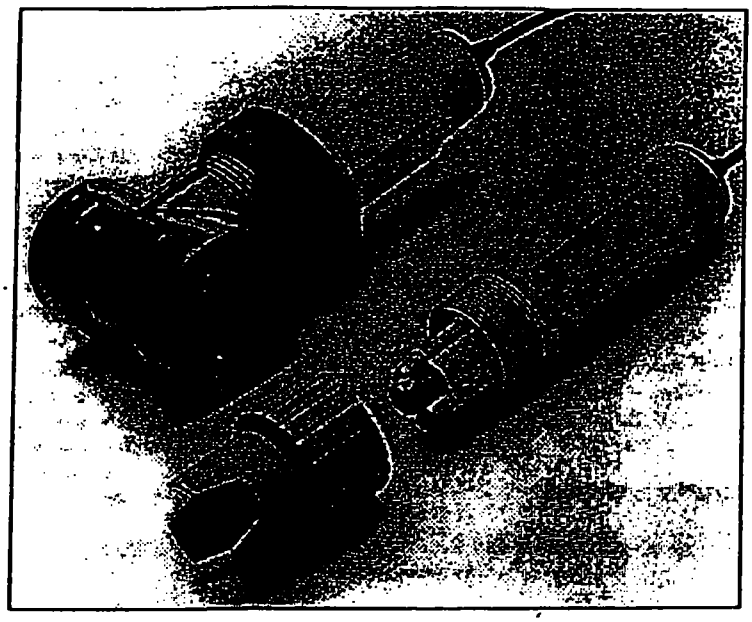

■ Chemically resistant LCP (liquid crystal polymer) Body.
The exceptional chemical resistance and mechanical strength of the LCP sensor body makes it ideal for most applications. These sensors can be used in aggressive process solutions such as acids, bases, alcohols, hydrocarbons, aromatics, chlorinated hydrocarbons, esters, ketones, and most other chemicals.

■ Differential Electrode Measurement Technique.
This field-proven technique uses three electrodes instead of the two normally used in conventional pH sensors. Process and reference electrodes measure the pH differentially with respect to a third ground electrode. The end result is unsurpassed measurement accuracy, reduced reference junction fouling, and elimination of sensor ground loops. These sensors provide greater reliability, resulting in less downtime and maintenance. For complete details on the Differential Sensor technology, as well as pH measurement in general, ask for GLI's Technical Handbook on pH.

■ Complete Encapsulation.
Complete encapsulated construction protects the sensor's built-in electronics from moisture and humidity problems, extending the working life of the sensor.

■ Convertible Mounting Style.
Threads are provided on both ends of the sensor, facilitating mounting into a pipe tee or attachment to the end of a pipe for submersion applications. This convertible mounting style enables you to consolidate inventory, thereby reducing associated costs. A union-mount style sensor and mounting tee for in-line service are also available for added convenience of installation and removal. Other mounting hardware assemblies, in a variety of materials, are listed on page 3.

■ Low Heat Distortion.
These sensors are physically stable and will not expand or contract when subjected to the heating and cooling cycles of a process. Furthermore, they may be installed in metal fittings without fear of leakage, a common problem when dissimilar materials are threaded together.

■ Built-in Preamp or Two-wire Transmitter.
The built-in preamp produces a strong signal, enabling you to locate the analyzer up to 3000 ft. (914 m) from the sensor. An optional built-in two-wire transmitter is available for applications requiring that the sensor signal be 4-20 mA. With this option, the measuring system's indicating instrument must be capable of providing 24 VDC to power the sensor, and have adjustment means to calibrate for offset and span.

Specifications

	In Flow-thru Tee	In Union Tee
Minimum Temperature	-5°C (23°F)	-5°C (23°F)
Maximum Temperature	PVC: 60°C at 50 psig, or 50°C at 100 psig Steel: 95°C at 100 psig CPVC: 95°C at 40 psig, or 65°C at 100 psig	PVC: 60°C at 40 psig, or 40°C at 100psig Steel: 95°C at 100 psig CPVC: 95°C at 30 psig, or 60°C at 100 psig
Maximum Pressure	PVC: 100 psig at 50°C, or 50 psig at 60°C Steel: 100 psig at 95°C CPVC: 100 psig at 65°C, or 40 psig at 95°C	PVC: 100 psig at 40°C, or 40 psig at 60°C Steel: 100 psig at 95°C CPVC: 100 psig at 60°C, or 30 psig at 95°C
Maximum Flow Rate	10 ft./sec. *NOTE: If possible, flow rate should be minimal for low conductivity water or solutions high in suspended solids.*	10 ft./sec. *NOTE: If possible, flow rate should be minimal for low conductivity water or solutions high in suspended solids.*

	pH Sensors	ORP Sensors
Wetted Materials	LCP (liquid crystal polymer) body and salt bridge with PVDF or ceramic junction (or Ryton body and salt bridge with PVDF or ceramic junction), glass process electrode, titanium ground electrode, and Viton O-ring process seals. Union-mount style sensor also has LCP adapter. When the pH sensor has an optional antimony process electrode, the ground electrode material is stainless steel.	LCP (liquid crystal polymer) body and salt bridge with PVDF or ceramic junction (or Ryton body and salt bridge with PVDF or ceramic junction), glass and platinum or glass and gold process electrode, titanium ground electrode, and RTV sealant. Union-mount style sensor also has LCP adapter and Viton O-ring process seals.
Measuring Range	0-14 pH (see Note 1 below)	-2000 to +2000 mV
Sensitivity	Less than 0.005 pH	Less than 0.5 mV
Stability	0.03 pH per 24 hours, non-cumulative	2 mV per 24 hours, non-cumulative
Output Span (only with 2-wire transmitter)	0.95 mA per pH unit	16 mA per 1000 mV
Output Offset (only with 2-wire transmitter) (see Note 2 below)	12 mA occurs at 7.0 pH ±0.88 pH	For -500 to +500 mV range: 12 mA occurs at 0 mV ±40 mV For 0 to 1000 mV range: 12 mA occurs at 500 mV ±40 mV
Load at 20 mA (only with 2-wire transmitter)	450 ohms	450 ohms
Maximum Transmission Distance:		
Sensor with Preamplifier	3000 ft. (914 m)	3000 ft. (914 m)
Sensor with 2-wire Transmitter	Limited only by wire resistance and power supply voltage	Limited only by wire resistance and power supply voltage
Sensor Cable:		
Sensor with Preamplifier	5 conductor (plus shield); 10 ft. (3 m) long	5 conductor (plus shield); 10 ft. (3 m) long
Sensor with 2-wire Transmitter	2 conductor (twisted pair); 10 ft. (3 m) long	2 conductor (twisted pair); 10 ft. (3 m) long

NOTES: 1. Most pH applications fall in the 2.5-12.5 pH range. General purpose pH glass electrodes perform well in this range. Some industrial applications require accurate measurement and control at pH values below 2 or above 12 pH. In these cases, please contact GLI for further details.

Repeatability and speed of response of a pH sensor with an optional antimony process electrode is not as good as a sensor with a glass process electrode. Antimony electrodes are only linear between 3 and 8 pH, and should only be ordered when process conditions, such as the presence of hydrofluoric acid, dictate their use.

2. The 4-20 mA provided by a sensor with a two-wire transmitter is non-isolated and uncalibrated. The measuring system's indicating instrument must be able to provide 24 VDC to power the sensor, and have adjustment means to calibrate for offset and span.

Ordering Information

TYPE OF MEASUREMENT
- ~~20 ORP, 5-wire (with built-in preamplifier)~~
- ~~21 ORP, 2-wire (with built-in two-wire transmitter providing 4-20 mA)~~
- 60 pH, 5-wire (with built-in preamplifier)
- ~~61 pH, 2-wire (with built-in two-wire transmitter providing 4-20 mA)~~

MOUNTING STYLE (each style has integral 10 ft./3 m long cable)
- ~~2 Convertible* (submersion or flow-thru mount)~~
- 5 Union-mount (includes adapter, but requires special 2-inch threaded tee)

BODY MATERIAL
- 8 LCP (liquid crystal polymer)
- ~~2 Ryton (for high pH only)~~

ELECTRODE MATERIAL
- P0 Glass, general purpose (for pH)
- ~~R0 Platinum (for ORP)~~
- ~~P1 Antimony (for pH)~~
- ~~R1 Gold (for ORP)~~

[ ] Product Number

Choose one from each category.

*When submersion mounting a convertible style sensor, please order LCP protector 60A2F1278 or Ryton protector 60A2F1278-300 (shown in Figure 1 on page 3) which listens onto the end of the sensor.

Accessories (order separately):

Interconnect Cable 1W1055**
For use with 5-wire sensors.

Interconnect Cable 1W0980**
For use with 2-wire sensors.

**Specify required length in whole feet.

Spare LCP Union Adapter 60G9753-101
Spare Ryton Union Adapter 60G9753-301

NOTE: Adapters include two Viton O-rings and a retaining ring.

pH 7 Buffer 3A0421*
pH 4 Buffer 3A0422*
pH 10 Buffer 3A0942*

*Buffers are in resealable, one pint plastic bottles.

Mounting Hardware Assemblies

FIGURE 1 For Submersion Mounting

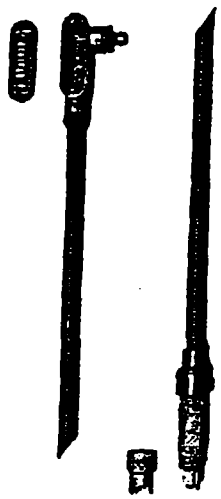

Part Number	Description
MH474B	PVC pipe (1 inch dia. by 4 ft./1.2 m long) and coupling with PVC pipe-mount j-box
MH434B	CPVC pipe (1 inch dia. by 4 ft./1.2 m long) and coupling with PVC pipe-mount j-box
60A2F1278	LCP protector (ordered separately)
60A2F1278-300	Ryton Protector (ordered separately)

NOTE: Hardware does not include the sensor or interconnect cable which must be ordered separately.

Plastic Mounting Hardware Ratings

An LCP or Ryton-encapsulated sensor that is mounted in a plastic flow-thru tee has a higher pressure rating at maximum temperature than when it is mounted in a union tee. The temperature rating is increased to 95°C at 100 psig when the sensor is mounted in a stainless steel flow-thru or union tee, or stainless steel cross.

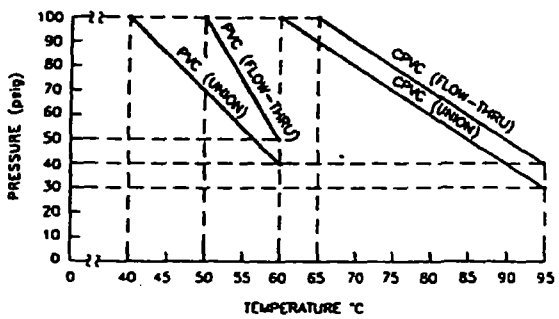

FIGURE 2 For Flow-thru Mounting

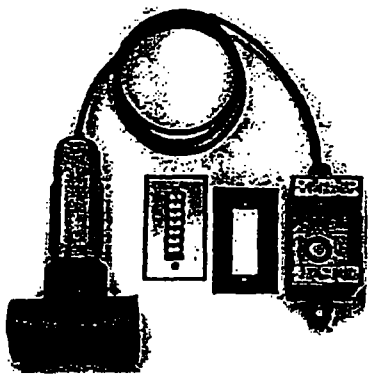

Part Number	Description
MH376	PVC 1-1/2 inch tee and aluminum j-box
MH336	CPVC 1-1/2 inch tee and aluminum j-box
MH316N	316 SS 1-1/2 inch tee and aluminum j-box
MH346X	316 SS 1-1/2 inch cross & aluminum j-box

NOTE: Hardware does not include the sensor or interconnect cable which must be ordered separately.

FIGURE 3 For Union Mounting

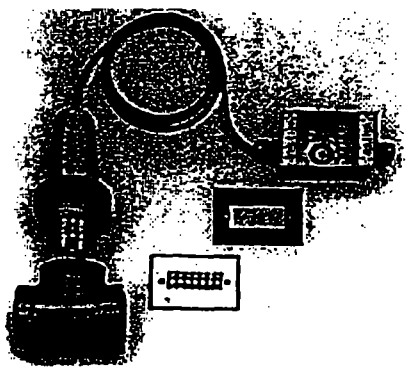

Part Number	Description
MH578N9A	PVC 2 inch special tee & aluminum j-box
MH538N9A	CPVC 2 inch special tee & aluminum j-box
MH518N9A	316 SS 2 inch special tee & aluminum j-box

NOTE: Hardware does not include the sensor or interconnect cable which must be ordered separately.

Engineering Specification

1. The pH or ORP sensor shall be of Differential Electrode Technique design which uses two electrodes to compare the process value to a stable internal reference standard buffer solution. The standard electrode shall have non-flowing and fouling resistant characteristics.

2. The sensor shall have a hex-shaped body to facilitate mounting, and shall be constructed of liquid crystal polymer for exceptional chemical resistance and mechanical strength. This material shall enable the sensor to be installed in metal fittings without leakage usually caused by heating and cooling cycles when dissimilar materials are threaded together.

3. The sensor's built-in electronics shall be completely encapsulated to protect them from moisture and humidity.

4. The sensor shall have a built-in preamplifier to enable the signal to be transmitted up to 3000 ft. (914 m) with standard cabling, or a built-in two-wire transmitter that provides a non-isolated and uncalibrated 4-20 mA output.

5. The sensor signal shall be automatically temperature compensated by an integral temperature sensor.

6. The sensor shall include a metal ground electrode to eliminate ground loop currents in the measuring electrodes.

7. The sensor shall be GLI International, Inc. Model 6028P0-series for LCP pH or 2028R0-series for LCP ORP (or Model 6022P0-series for Ryton pH or 2022R0-series for Ryton ORP).

Dimensions

Inches [mm]

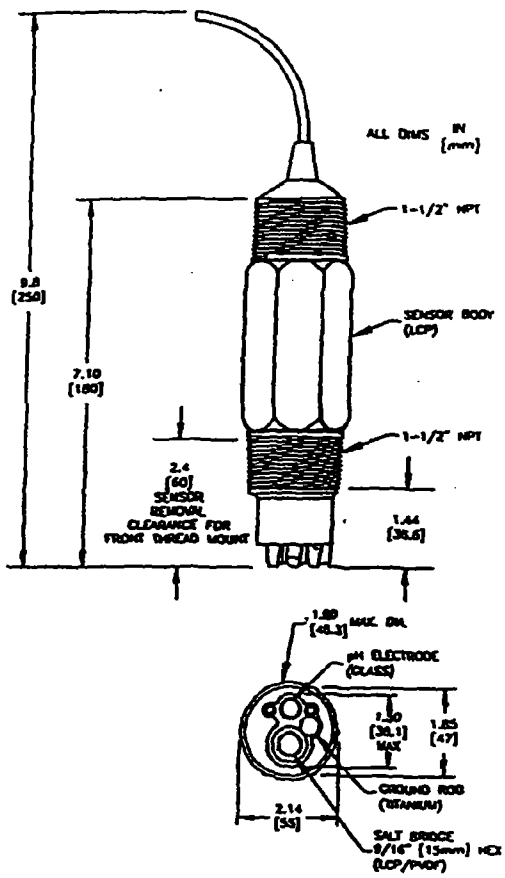

Convertible Style Sensor

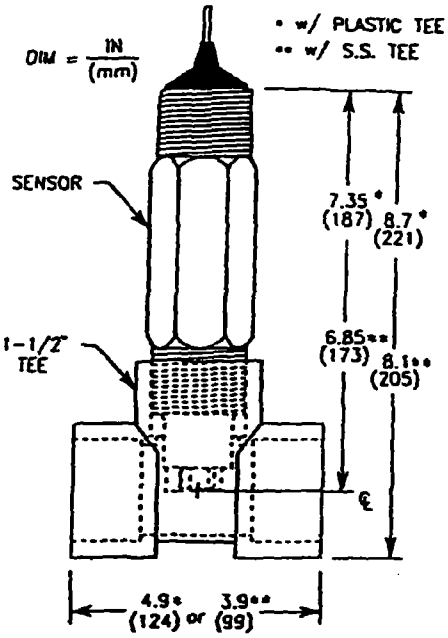

Flow-thru Tee Mounting

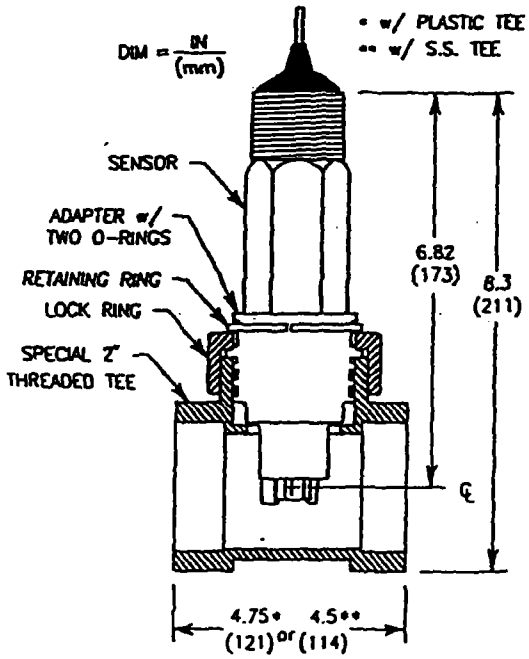

Union Tee Mounting

Worldwide Sales:
GLI International, Inc.
9020 West Dean Road
Milwaukee, Wisconsin 53224, U.S.A.
phone: (414) 355-3601
fax: (414) 355-8346
e-mail: info@gliinc.com

European Sales:
GLI International Ltd
Eastman Way, Hemel Hempstead
Hertfordshire, HP2 7HB England
phone: 01442 229310
fax: 01442 229311
e-mail: gli@gli.co.uk

In the interest of improving and updating its equipment, GLI reserves the right to alter specifications to equipment at any time.
A Member of the Environmental Instrumentation Group

Series E PLUS

PULSAtron® Electronic Metering Pumps

BOM# 507

Key Features:

- ***Automatic Control,*** available with 4-20 mADC direct or external pacing, with stop function
- ***Manual Control*** by on-line adjustable stroke rate and stroke length.
- ***UL Listed*** for demanding ***OUTDOOR*** and indoor application. Also CSA and NSF approved.
- ***Auto-Off-Manual*** switch.
- ***Highly Reliable*** timing circuit.
- ***Circuit Protection*** against voltage and current upsets.
- ***Panel Mounted Fuse.***
- ***Solenoid Protection*** by thermal overload with auto-reset.
- ***Water Resistant,*** for outdoor installation.
- ***Indicator Lights,*** panel mounted.
- ***Safe & Easy Priming*** with durable leak-free **bleed valve assembly** (standard most models).

Complete Selection

Twenty distinct models are available having pressure capabilities to 300 PSIG @ 3 GPD, and flow capacities to 500 GPD @ 20 PSIG, with turndown ratios up to 100:1. Metering performance is reproducible to within ± 2% of maximum capacity.

Pump heads, cartridge check valve assemblies and tubing are stocked in several corrosion-resistant plastic, elastomeric and alloy materials along with stainless steel that safely handle a wide variety of chemicals.

Please refer to the reverse side for Series E PLUS specifications.

Operating Benefits

Reliable metering performance. Our guided check valves, with their state-of-the-art seat and ball designs, provide precise seating, and excellent priming and suction lift characteristics. Our timing circuit is highly reliable and, by design, virtually unaffected by temperature, EMI and other electrical disturbances.

Rated "hot" for continuous duty. Series E PLUS pumps continue to meet their specifications for pressure and capacity even during extended use. That's because our high quality solenoid is separately encapsulated in a fin-cooled, thermo-conductive, enclosure that effectively dissipates heat.

High viscosity capability. A straight flow path and ample clearance between the diaphragm and head enable standard PULSAtron pumps to handle viscous chemicals up to a viscosity of 3000 CPS. For higher viscosity applications, larger, spring-loaded connections are available.

Leak-free, sealless, liquid end. Our diaphragms are of superior construction–teflon-faced, bonded to a composite of Hypalon and fabric layers, and reinforced with a metal insert for optimum flexibility and durability.

System Compatibility

A wide variety of chemicals can be pumped. Liquid end materials include glass-filled polypropylene (GFPPL), PVC, styrene-acrylonitrile (SAN), Polyvinylidene Fluoride (PVDF), Teflon, Hypalon, Viton, ceramic, alloys and 316SS.

Immediate installation and start-up. Included as standard accessories with all models are an injection/back pressure valve assembly and a foot valve/strainer assembly*, including discharge and suction tubing and tube straightener (*not available with high viscosity connections for > 3000 CPS).

Safe and easy priming and valve maintenance. Included as a standard accessory is a bleed valve assembly, including return tubing (available only on (those models with tubing connections and ≤ 240 GPD).

Quick and economical liquid end maintenance. Available for every model is a unique KOPkit®, a convenient, economically priced, package containing new cartridge check valves and other important spare parts.

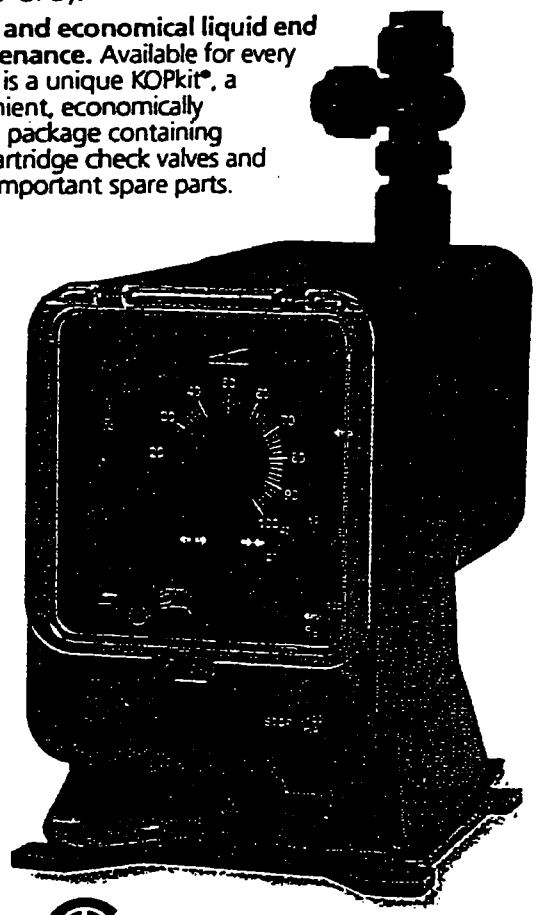

For additional information about PULSAtron's mid-range Series E and Series A PLUS refer to Technical Sheet No. EMP-022 and EMP-025 respectively. For information about the economical Series C PLUS and Series C refer to Technical Sheet Nos. EMP-026 and EMP-024.

An ISO 9002 System-Certified Company

PULSAFEEDER

A Unit of IDEX Corporation

Dimensions

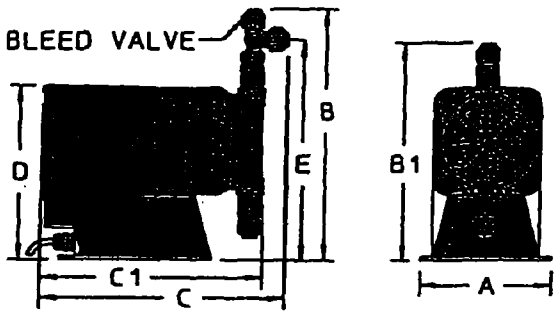

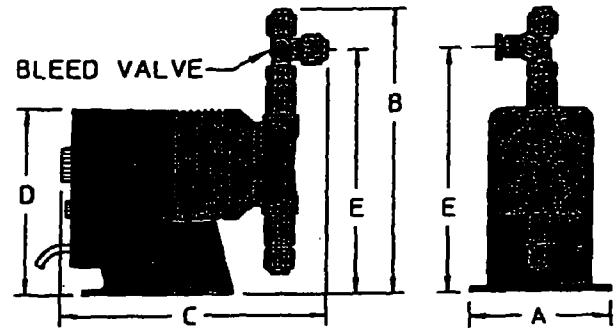

SERIES MP/E PLUS DIMENSIONS (inches)								
Model No.	A	B	B'	C	C'	D	E	Shipping Weight (lbs.)
A2	5.4	10.3	—	10.8	—	7.5	9.0	13
A3	5.4	10.6	—	10.7	—	7.5	9.2	13
B2	5.4	10.3	—	10.8	—	7.5	9.0	13
B3	5.4	10.6	—	10.7	—	7.5	9.2	13
B4	5.4	10.6	—	10.7	—	7.5	9.2	13
D3	5.4	10.6	—	10.7	—	7.5	9.2	15
D4	5.4	10.6	—	10.2	—	7.5	9.2	15
E4	5.4	10.6	—	10.2	—	7.5	9.2	15
F4	5.4	10.6	—	10.7	—	7.5	9.2	18
~~G4~~	~~5.4~~	~~10.6~~	~~—~~	~~10.7~~	~~—~~	~~7.5~~	~~9.2~~	~~18~~
G5	5.4	11.0	—	10.7	—	7.5	9.6	18
~~H4~~	~~6.1~~	~~11.0~~	~~—~~	~~10.2~~	~~—~~	~~8.2~~	~~9.6~~	~~21~~
H5	6.1	11.3	—	10.2	—	8.2	10.0	21
H6	6.1	11.3	—	10.2	—	8.2	10.0	21
H7	6.1	11.7	—	10.2	—	8.2	10.3	21
H8*	6.1	—	10.9	—	10.6	8.2	—	25
K2	5.4	10.3	—	10.8	—	7.5	9.0	13
K3	5.4	10.6	—	10.7	—	7.5	9.2	13
K5	5.4	11.0	—	11.7	—	7.5	9.6	18
K7	6.1	11.7	—	11.2	—	8.2	10.3	21

Note: Inches x 2.54 = cm

*The H8 is designed without a bleed valve.

Specifications subject to change without notice.

SERIES E/E-DC DIMENSIONS (inches)						
Model No.	A	B	C	D	E	Shipping Weight (lbs.)
02	5.0	9.6	9.6	6.5	8.2	10
03	5.0	9.9	9.5	6.5	8.5	10
12	5.0	9.6	9.6	6.5	8.2	10
13	5.0	9.9	9.5	6.5	8.5	10
14	5.0	9.9	9.5	6.5	8.5	10
33	5.4	10.6	11.4	7.5	9.2	15
34	5.4	10.6	11.4	7.5	9.2	15
44	5.4	10.6	11.4	7.5	9.2	15

Note: Inches x 2.54 = cm

SERIES C/CPLUS/APLUS DIMENSIONS (inches)						
Model No.	A	B	C	D	E	Shipping Weight (lbs.)
02	5.0	9.6	9.6	6.5	8.2	10
03	5.0	9.9	9.5	6.5	8.5	10
04	5.0	9.9	9.5	6.5	8.5	10
54/64	5.0	9.9	9.5	6.5	8.5	10

Note: Inches x 2.54 = cm

An ISO 9002 System-Certified Company

PULSAFEEDER

A Unit of IDEX Corporation

IDEX CORPORATION

Standard Product Operations
27101 Airport Road • Punta Gorda, Florida 33982
(941) 575-3800 • FAX (941) 575-4085 • FAX (800) 456-4085

Catalog No. EMP-003

PULSAtron and KOPkit are registered trademarks of Pulsafeeder

Printed in U.S.A. 7/97

PROJ. NAME:	LBG Scrubber		
CCC PROJ. N0:	99-216-2	RGET SHIP DATE:	
PROJ. MANAGER:	Karl Witman	OM ISSUE DATE:	26-Mar

Revision No. 1 of 1

Item No.	Qty	CCC Part #	Description	MFG Part #	Vend. Code	P.O. #	Del. Date	Date Rec'd	Unit Cost	Ext. Cost	Actual Cost
C307.1	1		Relay, DPDT	RH2BUL-120AC							
	1		Relay Socket, DPDT	SH2B-05							
C262.1	1		Relay, DPDT	RH2BUL-120AC							
	1		Relay Socket, DPDT	SH2B-05							
C268.1	1		Relay, DPDT	RH2BUL-120AC							
	1		Relay Socket, DPDT	SH2B-05							
C143.1	1		Contactor, IEC, 3P, 600V, 120V Coil, 1 N.O Contact	LC1D0910G6							
CB137	1		Cricuit Breaker; 1P; 480V; 4A; Equipment Protection	S271-K4							
DSC101.1	1		Disconnect, Non Fusable, 80 Amp, 600V, 3P, DIN	OT100E3							
F107.1	3		Fuse, Class J, Time Delay, 20 Amp, 600V, 300K AIR	LPJ-20SP							
F116.1	3		Fuse, Class CC, Time Delay, 5 Amp, 600V, 20K AIR	LP-CC-5							
F125.1	1		Fuse, Class FNQR, Rejection, 4 Amp, 600V, 200K AIR	FNQR-4							
F127.1	1		Fuse, Class FNQR, Rejection, 4 Amp, 600V, 200K AIR	FNQR-4							
F131.1	1		Fuse, Class FNQR, Rejection, 8 Amp, 600V, 20K AIR	FNQR-8							
FU354.1	1		Fuse, Class CC, Fast Acting,1/2 Amp, 600V, 200K AIR	KTKR-1/2							
H137	1		Panel Heater; 120V; 300W; 40 Degree remote Tstat	40150C1EW11K							
I363.1	1		Operator Panel, Optimate, 4x20 Char, 5 F Keys, 3 Ind Lights	OP-640-M							

Item No.	Qty	CCC Part #	Description	MFG Part #	Vend. Code	P.O. #	Del. Date	Date Rec'd	Unit Cost	Ext. Cost	Actual Cost
L209.1	1		Transformer Light Module, 2 NO	ZB2-BW033							
L221.1	1		Transformer Light Module, 2 NO	ZB2-BW033							
L133.1	1		Transformer Light Module, 2 NO	ZB2-BW033							
L147.1	1		Transformer Light Module, 2 NO	ZB2-BW033							
L159.1	1		Transformer Light Module, 2 NO	ZB2-BW033							
L171.1	1		Transformer Light Module, 2 NO	ZB2-BW033							
MECH10 0.1	1		Disconnect Selector Handle, Defeatable, Lock, NEMA 3R	OHB2AJ							
MECH10 1.1	1		Interface Cable, AB (SLC & Micrologix) to Optimate..	OP-ACBL-2							
	8		1" Wire Duct Cover	C1WH6							
	8		1" Wire Duct	E1X3WH6							
	8		DIN Rail, 35mm (1 meter sections)	9999NT13							
	1		Enclosure Data Packet, 12'x12'	A-DP2							
	1		Enclosure Mounting Feet, Steel	C-MFK							
	1		Enclosure Padlock Handle	C-WHPTO							
	1		3 Hub Ground Strip	PK3GTA1							
	1		NEMA Hinge Kit	A-NADFK							
	1		Disconnect Shaft for Selector Handle, 13'	OX330							
	3		Safety Cover, for Power Distribution Block #63133	O8530							
	1		Enclosure, Concept Series, 30'x24'x12', NEMA 4	C-SD302412							
	1		Enclosure Mounting Panel	C-P3024							

Item No.	Qty	CCC Part #	Description	MFG Part #	Vend. Code	P.O. #	Del. Date	Date Rec'd	Unit Cost	Ext. Cost	Actual Cost
	1		Panel (used for inner door), 27'x21'	A-30P24							
MECH10 1.2	1		Touchsafe Fuseholder, Class CC, 3P, 600V, 1/10-30A, DIN,	CHCC3							
	1		Touchsafe Fuseholder, Class J, 1P, 600V, 1-30A, DIN	JT60030							
	1		Power Distribution Block, 3P, 2/0-#14, 195 Amp	63133							
	1		Touchsafe Fuseholder, Class CC, 1P, 600V, 1/10-30A, DIN	CHCC1							
OL116.1	1		Overload Relay, IEC, 2.5-4 Amps, Class 20 , 1P Sens.	LR2D1508							
PS353.1	1		Power Supply, 24VDC, 320ma	8440PS24							
S207.1	1		Selector Switch, 3 Pos, Spring LT to CTR, Green	ZB2-BK173							
S219.1	1		Selector Switch, 3 Pos, Spring LT to CTR, Green	ZB2-BK173							
S145.1	1		Selector Switch, 3 Pos, Spring LT to CTR, Green	ZB2-BK173							
S157.1	1		Selector Switch, 3 Pos, Spring LT to CTR, Green	ZB2-BK173							
S169.1	1		Selector Switch, 3 Pos, Spring LT to CTR, Green	ZB2-BK173							
SW131.1	1		Pushbutton, Mushroom, Momentary, Red	ZB2-BW64							
T129.1	1		Transformer, 1000VA, 240/480x120, Fuse Block Incl.	9070-TF1000D1							
U335.1	1		AB MicroLogix PLC, 20VAC In, 12 Relay Out	1761-L32AWA							
U203.1	1		Level Control, 26K Ohm, 5s Delay, 120V, 2 Ch., Inverse, DIN	16MM1B0-00-05							
U217.1	1		Level Control, 26K Ohm, 5s Delay, 120V, 2 Ch., Direct, DIN	16MC1B0-05-00							
U230.1	1		Level Control, 100K Ohm, 120V, 2 Ch., Direct, DIN	16ME1B0							
U416.1	1		PH Analyzer; 2 Relay Outputs; Isolated 4-20ma; 1/4 DIN	P33A1NN							
U457.1	1		Conductivity Analyzer; 2 Rly Out; Isolated 4-20ma; 1/4 DIN	E33A1NN							

Item No.	Qty	CCC Part #	Description	MFG Part #	Vend. Code	P.O. #	Del. Date	Date Rec'd	Unit Cost	Ext. Cost	Actual Cost
	1		Miscellaneous (Wire, Terminal Blocks, Etc.)								

Solid State, Plug-In Modules
CONTROLS

WARRICK CONTROLS

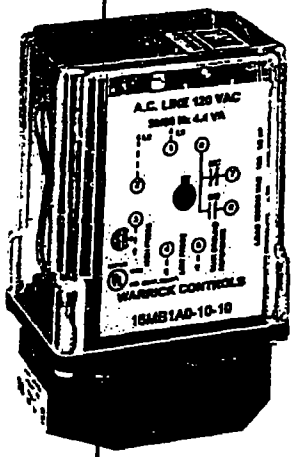

SERIES 16M General Purpose Control

Developed for general purpose single-level or differential service, these controls combine the reliability of solid state electronics and the convenience of plug-in design.

- Up to 1M ohms/cm sensitivity
- Compact size maximizes panel space
- 8-pin plugs are easy to install and service

BOM# U203.1

SERIES 16HM High Sensitivity Version

Series 16HM provides higher sensitivity up to 5.5 M ohm/cm. Probe voltage is 12 VDC.

Models

- Series 16M
- Series 16HM

Applications

- Single Level Service
- Differential Service
- Point Level
- Alarms
- e Control
- Pump Control

Features

- Compact Size
- Solid State Reliability
- Modular Plug-In Design
- Up to 5.5 Million Ohms/cm Sensitivity
- LED Monitoring
- Surge Protection
- Low Voltage Sensor
- Various Time Delays
- 8-Pin Plugs
- CSA Approved
- U.L. "Motor Control"

Wiring Series 16M & 16HM

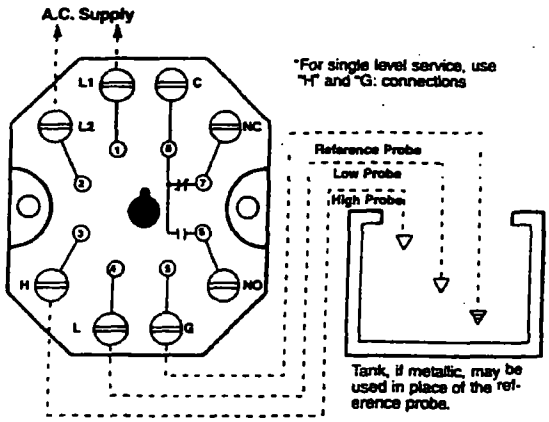

Dimensions Series 16M & 16HM

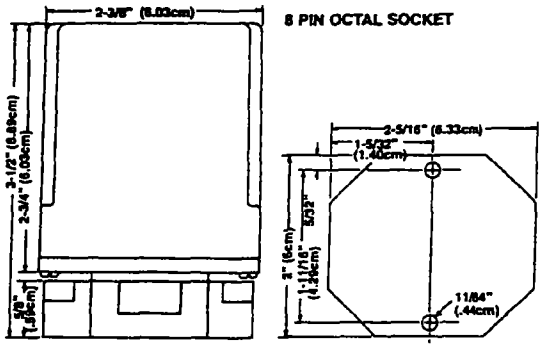

Note: Controls are also available with DIN mount socket.

Specifications Series 16M & 16HM

Series	Contact Design	Contact Rating (120/240)	Mode of Operation	Sensitivity	Prim. Voltage	Sec. Voltage	Approvals	Terminal Style	Options
16M	1 N.O. & 1 N.C. (1 form C)	10 amp Resistive 1/3 H.P.	Direct/Inverse factory set	0-1M ohm factory set	120V 240V 24V	12 VAC 1.5 mA	U.L. 508 File # E44426 CSA	Screw conn.	Time Delays
16HM	1 N.O. & 1 N.C. (1 form C)	10 amp Resistive 1/3 H.P.	Direct/Inverse factory set	0-5.5M ohm factory set	120V 240V 24V	12 VDC	U.L. 508 File # E44426 CSA	Screw conn.	Time Delays

Ordering Information Series 16M & 16HM

Standard part numbers in Bold

ORDER BY COMPONENT NUMBER 16MXXXX-X-XX-XX & 16HM

4TH PLACE SYMBOL Mode of Operation (Direct / Inverse)

	Sensitivity:	
A	4.7K	K*
B	0K	L*
C	26K	M*
D	50K	N*
E	100K	P*
F	470K	R*
G	1M	S*
H**	3M	T**
J**	5.5M	W**

5TH PLACE SYMBOL

	Supply Voltage:
1	120 VAC
2	240 VAC
3	24 VAC

6TH PLACE SYMBOL

	Socket Style:
A	8 Pin Octal
B	DIN Mount
M	None, Module Only

See page 40 for descriptions

7TH PLACE SYMBOL

	Enclosure:
0	None***
1	NEMA 1
4	NEMA 4
12	NEMA 12

10TH PLACE SYMBOL Time Delay (decreasing level) 1-20 seconds
3, 5, 10 seconds standard

9TH PLACE SYMBOL Time Delay (increasing level) 1-20 seconds
0.75, 10 seconds standard

8TH PLACE SYMBOL Optional Character, see page 40

* 16M
** 16HM
*** STD on 16M only

WARRICK CONTROLS One Cowles Rd., Plainville, CT 06062-1198 • Phone: 860-793-4579 • Fax: 860-793-4 80

BOM# U335.1

MicroLogix 1000 Programmable Controllers

The MicroLogix 1000 Programmable Controller provides you with a 10, 16 or 32 point version in five different electrical configurations to meet your control needs. The MicroLogix family also offers analog controllers with 20 discrete points and 5 analog points. The MicroLogix 1000 Programmable Controllers feature:

- peer-to-peer messaging capability. Allows you to network up to 31 controllers using the AIC+.
- RTU slave protocol support. Allows up to 254 nodes with a single master.
- built-in EEPROM memory. Retains all of your ladder logic and data if your controller loses power, eliminating the need for battery backup or separate memory module.
- fast throughput. Allows for typical throughput time of 1.5 ms for a 500 instruction program.
- multiple input and output commons. Allows you to use the controller for either sinking or sourcing input devices and for multi-voltage output applications.
- bi-directional high-speed counter. Offers real time output response independent of the program scan that accepts a 6.6k Hz input signal.
- adjustable DC input filters. Allows you to customize your input response time to meet your application needs.
- RS-232 communication channel. Allows for simple connectivity to a personal computer.

Catalog Numbers and Prices -

Description			Line Power	Catalog Number	Price ($US)
I/O Configuration	Inputs	Outputs			
10	(6) DC Sink/Source	(4) Relay	120/240V ac	1761-L10BWA	219★
	(6) DC Sink/Source	(4) Relay	24V dc	1761-L10BWB	205★
16	(10) 120V ac	(6) Relay	120/240V ac	1761-L16AWA	310★ 210
	(10) DC Sink/Source	(6) Relay	120/240V ac	1761-L16BWA	265★
	(10) DC Sink/Source	(6) Relay	24V dc	1761-L16BWB	255★
	(10) DC Sink/Source	(4) FET, (2) Relay	24V dc	1761-L16BBB	255★
20 Discrete 5 Analog	(12) 120V ac, (4) Analog	(8) Relay, (1) Analog	120/240V ac	1761-L20AWA-5A	670★
	(12) DC Sink/Source, (4) Analog	(8) Relay, (1) Analog	120/240V ac	1761-L20BWA-5A	620★
	(12) DC Sink/Source, (4) Analog	(8) Relay, (1) Analog	24V dc	1761-L20BWB-5A	595★
32	(20) 120V ac	(10) Triac, (2) Relay	120/240V ac	1761-L32AAA	510
	(20) 120V ac	(12) Relay	120/240V ac	1761-L32AWA	475 332
	(20) DC Sink/Source	(12) Relay	120/240V ac	1761-L32BWA	400
	(20) DC Sink/Source	(12) Relay	24V dc	1761-L32BWB	385
	(20) DC Sink/Source	(10) FET, (2) Relay	24V dc	1761-L32BBB	385

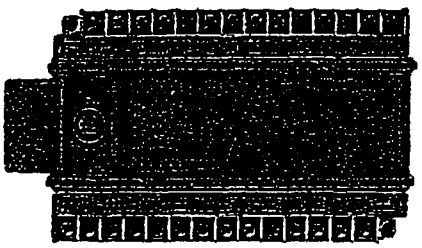

1761-L16BWA MicroLogix 1000 Programmable Controller
94-430-7

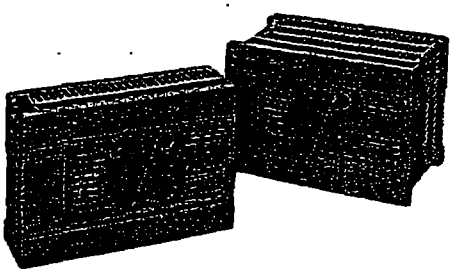

1761-L10AWA MicroLogix 1000 Programmable Controller
97-277-1

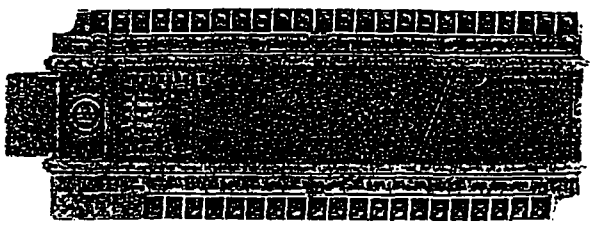

1761-L32AWA MicroLogix 1000 Programmable Controller
94-435-4

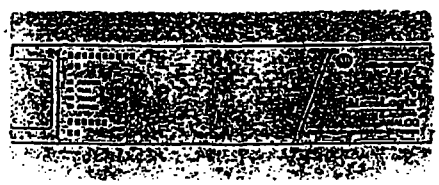

1761-L20BWA-5A MicroLogix 1000 Programmable Controller

★New or changed since last issue.

PLC Direct by Koyo

OP600 Series Operator Panels

OP–620
OP–640

BOM# I363.1

See Page 7–17 for specifications and power supply information.

See Page 7–37 for cable specification and ordering details.

See Page 7–34 for dimensions and installation information.

Both OP600 series operator panels have a broad range of operator input and display capabilities. The OP–WINEDIT software allows you to predefine up to 160 status or variable messages. Text messages, BCD, BCD Double, Binary, and Floating Point Math numbers can be displayed. Fixed point numbers can also be displayed. Both panels have five user-defined pushbuttons. Each pushbutton can be configured as momentary or alternating action. LED indicators in the upper left corner of each pushbutton illuminate when the pushbutton is turned ON. You can label the LEDs by inserting label sheets under the lens cover. Simply remove the plastic bezel to gain access to the label cover. Labels can be created using the OP–WINEDIT software.

In addition to these common features, the two panels have their own unique features which are described below.

See Page 7–28 for an example of how user defined messages are entered in an OP–1510 panel. The procedure for this panel is similar.

See Page 7–22 for an example of how the pushbuttons are used in an OP–1224 panel. The procedure for these panels is similar.

OP–620

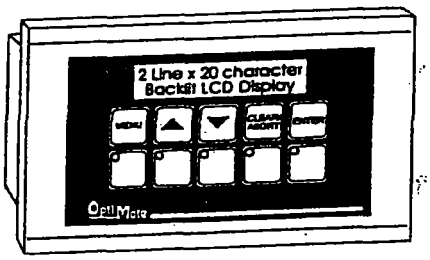

- ❑ **Menu Tree:** The OP–WINEDIT software allows you to create a menu tree. This can be used to select the functions for which you are entering data, i.e. setpoints, alarms, high and low limits, etc.
- ❑ **Interactive Messages:** Messages can be interactive to prompt the operator to enter data using the up/down arrow keys.
- ❑ **Data Adjustment:** Variables can be incremented or decremented using the up/down arrow keys, which is useful for setting setpoint limits.
- ❑ **2 Line Message Display:** Has a 2 line by 20 character LCD display.

See the examples starting on Page 7–28 for examples of how a menu tree, interactive messages and data adjustments are entered in an OP–1510 panel. The procedures for this panel are similar.

OP–640

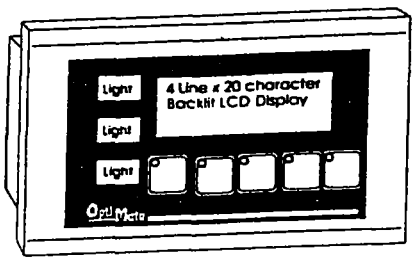

- ❑ **4 Line Message Display:** Has a 4 line by 20 character LCD display.
- ❑ **Three LED Annunciator Lamps:** Three LEDs illuminate user-defined labels. Within the internal memory are two control bits for each light. One bit controls the on/off status and the other bit controls whether or not the light flashes.

See page 7–30 for examples of how pushbutton functions keys and annunciator lamps are used in an OP–1510 panel. The procedures for this panel are similar.

BOM# U416.1

GLI International

the
E33 Analyzer
and
3700E-Series Electrodeless Conductivity Sensors

Full-featured, Low Cost Conductivity System

The Model E33 is a panel mount, 1/4 DIN, Electrodeless Conductivity Analyzer. This economical and full-featured system was specifically designed for OEMs and cost conscious end-users. The analyzer can be configured to measure conductivity, total dissolved solids, or concentration in percent. The E33 has multiple language capabilities, and exceeds U.S. and European standards for EMI and RFI.

The 3700E-Series Electrodeless Conductivity Sensors are rugged and non-fouling. These sensors have versatile mounting configurations, making them suitable for in-line or submersion mounting. Polypropylene, PEEK, PFA Teflon,® and PVDF wetted materials are available for mild and harsh applications.

CE

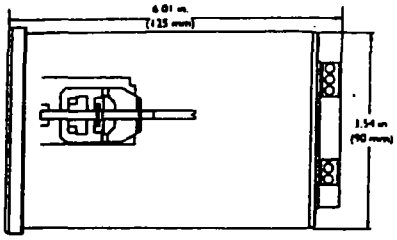

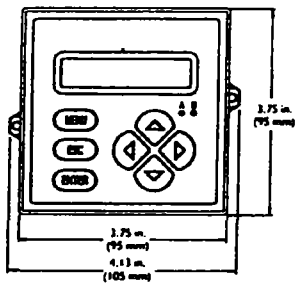

E33 Analyzer

- **Built-in or User-defined Concentration Tables**
- **Multiple Measurements**
- **Multiple Language Capability**
- **Menu-guided Operation**
- **Four Temperature Compensation Methods**
- **Custom OEM Versions Available**

Specification Highlights

Display: Backlit LCD
Measurement Units:
µS/cm, mS/cm, S/cm, %, and ppm
Ambient Temperature:
-20 to 60°C (-4 to 140°F)
Temperature Compensation:
Auto/Manual, -20 to 200°C
Relays: Two electromechanical SPDT
Analog Outputs:
Two isolated 0-20 or 4-20 mA
Power: 90-130 or 190-260 VAC, 50-60 Hz.
Analyzer Performance:
Accuracy: 0.5% of span
Stability: 0.2% of span/24 hrs
Repeatability: 0.1% of span
Enclosure: 1/4 DIN with NEMA 4X (IP65) front panel; hardware included for panel mounting
Weight: ~1.7 lbs. (0.8 kg)

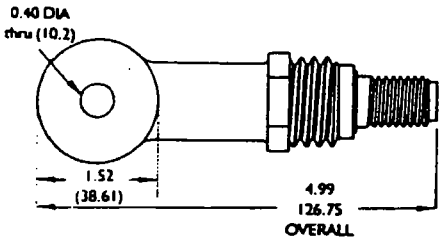

Convertible Style Sensor pictured

3700E-Series Electrodeless Conductivity Sensors

These sensors measure from 0-2,000,000 microSiemens/cm.

- **Unique Electrodeless Technology**
- **Available in Polypropylene, PEEK, PFA Teflon®, or PVDF Wetted Materials**
- **Standard 20-foot Integral Cable**

Specification Highlights

Sample Temperature:
-10 to 200°C (14 to 381°F)
Pressure Range:
200 psig at 302°C
Accuracy:
+/- 0.01% of reading, all ranges
Wetted Materials:
Polypropylene, PEEK, PFA Teflon®, or PVDF
Weight: ~1 lbs. (0.45 kg)

Ordering Information

E33 Analyzer:
E33A2A1N

3700E-Series Electrodeless Conductivity Sensors:

For a complete listing of options, mounting configurations, and accessories, please contact GLI International, Inc.

Electrodeless Technology

Electrodeless sensors induce a low current in a closed loop of solution, then measure the magnitude of this current to determine the solution's conductivity. The conductivity analyzer drives Torroid A, inducing an alternating current in the solution. This current signal flows in a closed loop through the sensor bore and surrounding solution. Torroid B senses the magnitude of the induced current which is proportional to the conductance of the solution. The analyzer processes this signal and displays the corresponding reading.

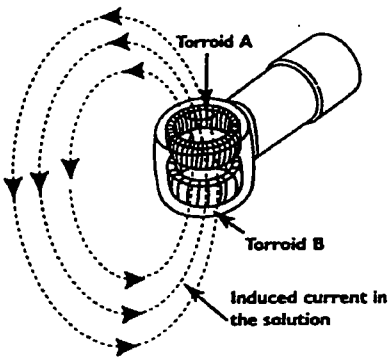

Since this style sensor has no electrodes, problems with contacting type electrodes—such as polarization, oily fouling, process coating, and contamination—will not affect the performance of the electrodeless sensor.

GLI offers electrodeless sensors for solutions with conductivity as high as 2,000,000 microSiemens/cm, and with a temperature between 0 and 200°C. All models are automatically temperature compensated over this range.

Visit us at www.gliint.com

Teflon® is a registered trademark of DuPont.

Worldwide Sales:
GLI International, Inc.
9020 West Dean Road
Milwaukee, Wisconsin 53224, U.S.A.
phone: [414] 355-3601
fax: [414] 355-8346
e-mail: info@gliint.com

European Sales:
GLI International Ltd
Eastman Way, Hemel Hempstead
Hertfordshire, HP2 7HB England
phone: 01442 229310
fax: 01442 229311
e-mail: gli@gli.co.uk

In the interest of improving and updating its equipment, GLI reserves the right to alter specifications to equipment at any time.

BOM# 0457.1

Technology For Solutions

GLI International

Data Sheet E33/1098

Model E33 Electrodeless Conductivity Analyzer

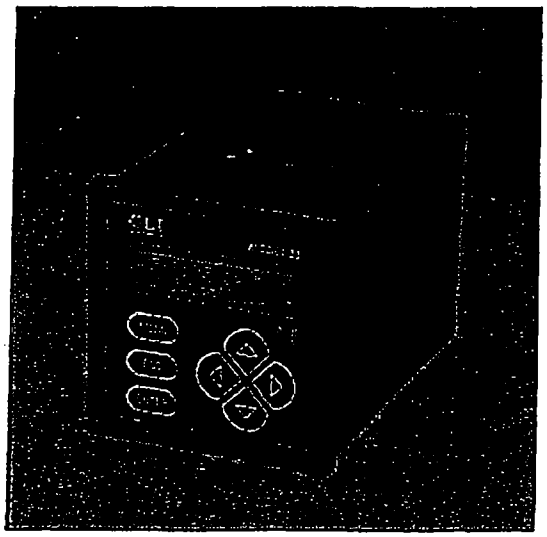

Panel-mount 1/4 DIN Style

CE

Certified Compliant to European Community Standards

■ Multiple Measurements. The Model E33 analyzer can be selected to measure conductivity (in µS/cm, mS/cm or S/cm), concentration in %, or total dissolved solids in ppm. The parameter value and measured temperature can be displayed together or separately. Also, the values of both 0/4-20 mA analog outputs can be displayed. Front panel red LEDs indicate relay "on/off" status.

■ Backlit LCD Readout. The two-line, 16 character backlit LCD provides excellent viewing contrast under all lighting conditions.

■ Built-in Concentration Tables. Built-in chemical tables represent the most commonly measured solutions in various concentration ranges. Simply select the table matching your solution type and range. For other solutions, you can create a custom concentration table of up to ten data points to define it.

■ Panel-mount 1/4 DIN Case with NEMA 4X Front Panel. The E33 is housed in a 1/4 DIN, plastic case that features a NEMA 4X front panel.

■ Multiple Language Capability. All screens can be selected for display in English, French, German, or Spanish. (For other languages, use GLI's optional software tool kit to create an ASCII-character conversion table for installation by GLI.)

■ "Menu-guided" Operation. The simple keypad and logical menu structure make this analyzer easy to use. Menu screens guide you through setup, calibration, operation, and test/maintenance functions.

■ Electromagnetic Conformance. The analyzer exceeds U.S. and meets European standards for EMI and RFI.

■ Simple Interactive Diagnostics. Built-in diagnostics continuously tests analyzer and sensor operation.

■ Four Temp. Comp. Methods. Select from linear slope (% per °C), built-in natural water temperature properties table or, for special solution compensation requirements, you can create a custom temperature table of up to ten data points to provide accurate temperature-compensated measurements. A "no compensation" mode is also provided.

■ Multiple Calibration Methods. After zeroing the measurement system for the first time, calibrate using the traditional wet, 1-POINT method. When measuring % concentration, choose between entering a % concentration value or a conductivity value.

■ Two 0/4-20 mA Analog Outputs. Each of the two isolated analog outputs can be set to 0-20 mA or 4-20 mA, and independently assigned to represent the selected parameter (conductivity, % concentration, or TDS) or the measured temperature. During calibration, both outputs can be held at their present values, transferred to preset values, or remain active to respond to the measured value.

■ Passcode-protected Access. For security, use the E33's passcode capability to restrict access to configuration settings and calibration to only authorized personnel.

■ OEM Versions Available. These analyzers can be manufactured to accommodate OEM-specific needs.

ELECTRODELESS CONDUCTIVITY

Specifications

Operational:

Display ..... Two-line by 16 character backlit LCD

NOTE: The measured value (conductivity, % concentration, or TDS) or temperature can be separately displayed, or both measurements can be shown together on a single screen. Both analog output values can also be displayed on one screen.

Measurement	Selectable Ranges
Conductivity	µS/cm: 0-200.0 or 0-2000
	mS/cm: 0-2.000, 0-20.00, 0-200.0, or 0-2000
	S/cm: 0-2.000
% Concentration	0-99.99% or 0-200.0%
TDS	0-9999 ppm
Temperature	-20.0 to +200.0°C or -4.0 to 392.0°F
mA Outputs (#1 and #2)	0.00-20.00 mA or 4.00-20.00 mA

Ambient Conditions ..... Operation: -4 to +140°F (-20 to +60°C); 0 to 95% relative humidity, non-condensing
Storage: -22 to +158°F (-30 to +70°C); 0 to 95% relative humidity, non-condensing

Relays:

Types/Outputs ..... Two electromechanical relays; SPDT (Form C) contacts; U.L. rated 5A 115/230 VAC, 5A @ 30 VDC resistive

Operational Mode ..... Each relay (A and B) can be assigned to be driven by the selected parameter (conductivity, % concentration, or TDS), measured temperature, or by a detected system "fail" diagnostic condition

Function Modes: Control ..... Settings for high/low phasing, setpoint, deadband, overfeed timer, off delay, and on delay

Alarm ..... Settings for low alarm point, low alarm point deadband, high alarm point, high alarm point deadband, off delay, and on delay

Status ..... Not configurable; relay only activates when a "fail" diagnostic WARNING condition exists

Indicators ..... Relay A and B LEDs indicate respective relay on/off status

Temperature Compensation ..... Automatic or manual, 14.0 to 392.0°F (-10.0 to +200.0°C), with selection for Pt 1000 ohm RTD temperature element or a manually entered value

NOTE: Depending on the selected parameter (conductivity, % concentration, or TDS), not all of the following temperature compensation methods are available:

Linear % per °C slope, built-in natural water temperature properties table, user-entered temperature table, or no compensation

Sensor-to-Analyzer Distance ..... Maximum cable length is a function of the measuring range and allowable non-linearity. The following schedule is recommended:

Full-scale Range	Maximum Length
200 to 2000 µS/cm	200 ft. (61 m)
2000 to 2,000,000 µS/cm	300 ft. (91 m)

NOTE: When measuring % concentration, convert the analyzer full-scale value to conductivity to determine the maximum distance.

Power Requirements ..... 90-130 VAC, 50/60 Hz. (10 VA max.) or 190-260 VAC, 50/60 Hz. (10 VA max.)

Calibration Methods:

1-POINT COND (or CONC or TDS) ..... Enter one reference solution or sample value (determined by laboratory analysis or a comparison reading).

ZERO ..... With the dry sensor in air, press keys to initiate automatic system zeroing.

Analog Outputs ..... Two outputs (#1 and #2) each with 0.004 mA (12-bit) resolution:

Output #1: Isolated 0-20 mA or 4-20 mA (selectable); 600 ohms maximum load
Output #2: Isolated 0-20 mA or 4-20 mA (selectable); 600 ohms maximum load

NOTE: Each output can be assigned to represent the selected parameter (conductivity, % concentration, or TDS) or measured temperature. Parameter values can be entered to define the endpoints at which the minimum and maximum mA output values are desired. During calibration, both outputs can be selected to hold their present values, transfer to preset values to operate control elements by an amount corresponding to those values, or remain active to respond to the measured value.

Memory Backup (non-volatile) ..... All user settings are retained indefinitely in memory (EEPROM)

EMI/RFI Conformance ..... Exceeds US and meets European standards for conducted and radiated emissions and immunity; certified CE compliant for applications as specified by EN 50081-2 for emissions and EN 50082-2 for immunity

Electrical Certifications:

General Purpose (pending) ..... UL, C-UL, FM, and DEMKO
Division 2 (pending) ..... UL, C-UL and FM: Groups A, B, C, D, F, and G
Zone 2 (pending) ..... DEMKO: Group IIC

Analyzer Performance (Electrical, Analog Outputs):

Accuracy ..... 0.5% of span*
Stability ..... 0.2% of span per 24 hours, non-cumulative*
Repeatability ..... 0.1% of span or better*
Temperature Drift ..... Zero and Span: less than 0.02% of span per °C*

**These typical performance specifications are:*

1. Based on 25 °C with conductivity of 500 µS/cm and higher. Consult GLI for applications in which conductivities are less than 500 µS/cm.
2. Derated above 100 °C to the maximum displayed temperature of 200 °C. Consult GLI for details.

Mechanical:

Enclosure ..... Polycarbonate with NEMA 4X front panel; general purpose; two zinc-plated steel brackets for panel mounting
Mounting Configuration ..... Panel mounting

Ordering Information

MODEL NUMBER

E33 Electrodeless conductivity/% concentration/TDS analyzer in 1/4 DIN panel mount case with NEMA 4X front panel. Includes two brackets with adjustable screws for panel mounting.

RESERVED CATEGORIES

COMPANY ID NAMEPLATE

- **N** GLI Nameplate
- **B** Customer-specified Nameplate (see Note 1)
- **C.** No Nameplate

EQUIPMENT TAGGING (specify tag data)

- **N** None
- **P** Paper
- **S** Stainless steel

E33 A1 **Product Number**

Choose item from last category.

NOTE 1: The nameplate cannot be printed with a company logo. Please specify the desired name which is printed in only capital letters.

Model E33 Accessories:

- **Electrodeless Conductivity Sensors:** Refer to data sheet 3700E for details.
- **Software Tool Kit 1000G3311:** This kit is for use with an IBM-compatible PC. The software can create and download multiple sets of analyzer configuration values. Also, its language tool can be used to create language conversion tables (ASCII characters only) for installation by GLI. The kit includes a GLI software diskette and ten-foot cable terminated with an RS-232 connector and stripped/tinned wires for connection to the analyzer.

Engineering Specification

1. The microprocessor-based analyzer shall accept any GLI Model 3700E-series electrodeless conductivity sensor.
2. The analyzer shall measure the selected parameter (conductivity, % concentration, or TDS) and process temperature.
3. The analyzer shall be configurable for multiple languages.
4. The analyzer shall have a two-line by 16 character backlit LCD. It shall display the measured value and temperature on separate screens, or both measurements together on one screen. The values of both analog outputs shall also be displayed on one screen.
5. The analyzer shall have these calibration methods:
   a) 1-POINT Method: Enter one reference solution value or one sample value (determined by laboratory analysis or comparison reading). When measuring % concentration, the value can be a % concentration value or a conductivity value.
   b) ZERO Method: With the dry sensor in air, press keys to initiate automatic system zeroing.
6. The analyzer shall have a passcode to restrict access to configuration settings and calibration to only authorized personnel.
7. The analyzer shall have built-in chemical tables representing the most commonly measured solutions in various concentration ranges. For other solutions, the analyzer shall enable the user to create a custom concentration table of up to ten data points to define the solution.
8. Depending on the selected parameter (conductivity, % concentration, or TDS), the analyzer shall provide one or more of the following temperature compensation methods:
   a) Linear slope (% per °C).
   b) Built-in natural water properties table.
   c) User-defined temperature table of up to ten data points for special solution compensation requirements.
   d) No compensation.
9. The analyzer shall have relays that can be selected to function as dedicated system diagnostic alarm relays to alert the operator when a "fail" diagnostic WARNING condition exists.
10. The analyzer shall have user-test diagnostics for outputs, relays, and alarm LEDs without requiring special test equipment.
11. The analyzer shall be computer configurable using its RS-232 port and GLI's optional software tool kit.
12. The analyzer shall have two isolated 0/4-20 mA analog outputs. Each output can be assigned to represent the selected parameter (conductivity, % concentration, or TDS) or measured temperature. Parameter values can be entered to define the endpoints at which the minimum and maximum mA output values are desired. During calibration, both outputs can be selected to hold their present values, transfer to preset values to operate control elements by an amount corresponding to those values, or remain active to respond to the measured value.
13. The analyzer shall be GLI International, Inc. Model E33.

Dimensions

Inches (mm)

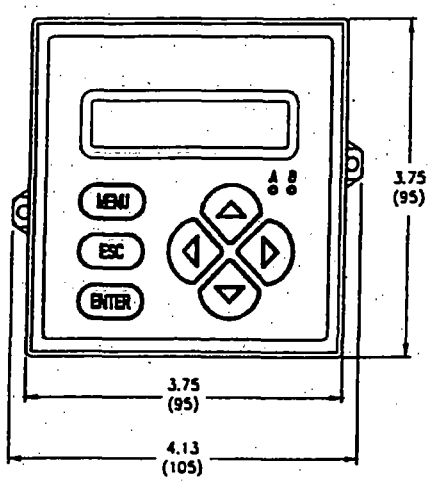

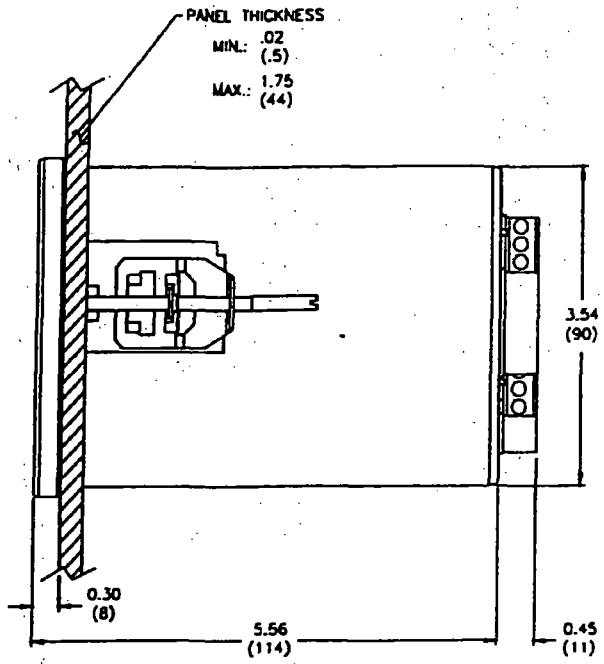

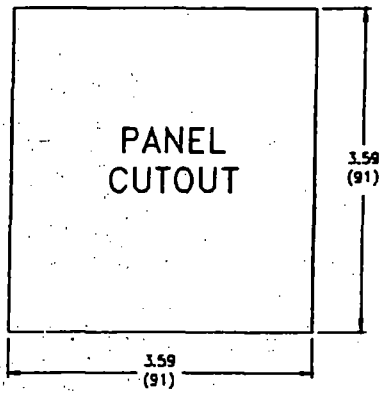

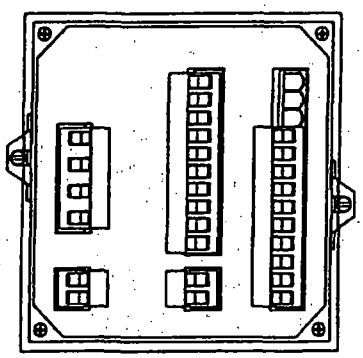

NOTE: ALL DIMS INCHES (mm)

BACK VIEW OF ANALYZER

Data Sheet E33

Worldwide Sales:
GLI International, Inc.
9020 West Dean Road
Milwaukee, Wisconsin 53224, U.S.A.
phone: [414] 355-3601
fax: [414] 355-8346
e-mail: info@gliint.com

European Sales:
GLI International Ltd
Eastman Way, Hemel Hempstead
Hertfordshire, HP2 7HB, England
phone: 01442 229310
fax: 01442 229311
e-mail: gli@gli.co.uk

In the interest of improving and updating its equipment, GLI reserves the right to alter specifications to equipment at any time.

Control System Design Package

CCC Project Number

99216_2

Main Power Source (supplied by others)

460VAC/3PH/60

General System Information

CCC Contact person:	Mike Ebner
Project Consultant:	LBG, Inc
Primary Contact:	Kristen Yanke
Primary Phone #:	651-490-1405
Site Location:	Ohio
System Type:	Scrubber (w/ Oxidizer)
Classifications:	-
Agency Approval:	-
Control Voltage:	120VAC
Main Supply Power:	460VAC/3PH/60
Panel Location:	Mounted to Skid

Customer Approval: _____ Date: _____

INFORMATION HEREIN IS THE PROPERTY OF CATALYTIC COMBUSTION CORP. ANY COPYING, TRANSMITTAL TO OTHERS, OR USE EXCEPT THAT FOR WHICH IT IS LOANED IS PROHIBITED.

Bill of Materials

Dev. Code	Description	QTY	Part Number	MFG
C143.1	Contactor, IEC, 3P, 600V, 120V Coil, 1 N.O Contact	1.00	LC1D0910G6	Square D
C262.1	Relay, DPDT	1.00	RH2B-UL-AC120V	IDEC
	Relay Socket, DPDT	1.00	SH2B-06	IDEC
C268.1	Relay, DPDT	1.00	RH2B-UL-AC120V	IDEC
	Relay Socket, DPDT	1.00	SH2B-06	IDEC
C307.1	Relay, DPDT	1.00	RH2B-UL-AC120V	IDEC
	Relay Socket, DPDT	1.00	SH2B-06	IDEC
C309	Relay, DPDT, 120V, w/ Indicator light	1	RH2B-UL-AC120V	IDEC
CB137	Circuit Breaker; 1P; 480V; 6 Amp; Equipment Protection	1.00	S272-K1	ABB
DSC101.1	Disconnect, Non Fusable, 80 Amp, 600V, 3P, DIN	1.00	OT100E3	ABB
F107.1	Fuse, Class J, Time Delay, 20 Amp, 600V, 300K AIR	3	LPJ-20SP	Bussman
F116.1	Fuse, Class J, Time Delay, 5 Amp, 600V, 300K AIR	3	LPJ-5SP	Bus
F121.1	Fuse; Class CC; Time Delay; 6 Amp; 600V; 20K AIR	3	LP-CC-6	Bus
F125.1	Fuse; Class FNQR; Rejection; 4 Amp; 600V; 200K AIR	1.00	FNQR-4	Bus
F127.1	Fuse; Class FNQR; Rejection; 4 Amp; 600V; 200K AIR	1.00	FNQR-4	Bus
F131.1	Fuse; Class FNQR; Rejection; 10 Amp; 600V; 200K AIR	1	FNQR-10	Bus
F354.1	Fuse, Class CC, Fast Acting,1/2 Amp, 600V, 200K AIR	1.00	KTKR-1/2	Bussman
H137	Panel Heater; 120V; 300W; 40 Degree Remote Tstat	1.00	040150C1EW11K	Watlow
I363.1	Operator Panel, Optimate, 4x20 Char, 5 F Keys, 3 Ind Lights	1.00	OP-640-M	KOY
L133.1	Transformer Light Module, 2 NO	1.00	ZB2-BW033	Square D
L147.1	Transformer Light Module, 2 NO	1.00	ZB2-BW033	SQD
L159.1	Transformer Light Module, 2 NO	1.00	ZB2-BW033	SQD
L171.1	Transformer Light Module, 2 NO	1.00	ZB2-BW033	SQD
L209.1	Transformer Light Module, 2 NO	1.00	ZB2-BW033	SQD
L221.1	Transformer Light Module, 2 NO	1.00	ZB2-BW033	SQD
MECH100.1	Disconnect Selector Handle, Defeatable, Lock, NEMA 3R	1.00	OHB2AJ	ABB
MECH101.1	Interface Cable, AB (SLC & Micrologix) to Optimate	1.00	OP-ACBL-2	KOY
	1" Wire Duct Cover	8	C1WH6	PAN
	1" Wire Duct	8	E1x3WH6	PAN
	DIN Rail, 35mm (1 meter sections)	8	9999NT13	SQD
	Enclosure Data Packet, 12"x12"	1.00	A-DP2	HOF
	Enclosure Mounting Feet, Steel	1.00	C-MFK	HOF
	Enclosure Padlock Handle	1.00	C-WHPTO	HOF
	3 Hub Ground Strip	1.00	PK3GTA1	SQD
	NEMA Hinge Kit.	1.00	A-NADFK	HOF
	Disconnect Shaft for Selector Handle, 13".	1.00	OX330	ABB
	Safety Cover, for Power Distribution Block #63133	3	08530	Gould
	Enclosure, Concept Series, 30"x24"x12", NEMA 4	1.00	C-SD302412	Hoffman
	Enclosure Mounting Panel	1.00	C-P3024	Hoffman
	Panel (used for inner door), 27"x21"	1.00	A-30P24	Hoffman
MECH101.2	Touchsafe Fuseholder, Class CC, 3P, 600V, 1/10-30A, DIN	1.00	CHCC3	BUS
	Touchsafe Fuseholder, Class J, 1P, 600V, 1-30A, DIN	1	JT60030	BUS
	Power Distribution Block, 3P, 2/0-#14, 195 Amp,	1.00	63133	GOU
	Touchsafe Fuseholder, Class CC, 1P, 600V, 1/10-30A, DIN	2	CHCC1	Bussman
OL116.1	Overload Relay, IEC, 2.5-4 Amps, Class 20 , 1P Sens.	1.00	LR2D1508	Square D
PS353.1	Power Supply, 24VDC, 320ma	1.00	8440PS24	SQD

CATALYTIC COMBUSTION

CUSTOMER: LBG, Inc

DESCRIPTION: Scrubber (w/ Oxidizer)

PROJECT NO: 99216_2

DRAWING NO: 99216300 2

REVISION HISTORY

REV	DATE	ACTION TAKEN	APPR.
0	12/28/98	Submittal	
A	10/15/99	As Built (ship date)	
B	12/8/99	Field Modified #1	
C		Field Modified #2	

INFORMATION HEREIN IS THE PROPERTY OF CATALYTIC COMBUSTION CORP. ANY COPYING, TRANSMITTAL TO OTHERS, OR USE EXCEPT THAT FOR WHICH IT IS LOANED IS PROHIBITED.

Bill of Materials

Dev. Code	Description	QTY	Part Number	MFG
S145.1	Selector Switch, 3 Pos, Spring LT to CTR, Green	1.00	ZB2-BK173	SQD
S157.1	Selector Switch, 3 Pos, Spring LT to CTR, Green	1.00	ZB2-BK173	SQD
S169.1	Selector Switch, 3 Pos, Spring LT to CTR, Green	1.00	ZB2-BK173	SQD
S207.1	Selector Switch, 3 Pos, Spring LT to CTR, Green	1.00	ZB2-BK173	SQD
S219.1	Selector Switch, 3 Pos, Spring LT to CTR, Green	1.00	ZB2-BK173	SQD
SW131.1	Pushbutton, Mushroom, Momentary, Red	1.00	ZB2-BW64	SQD
T129.1	Transformer; 1000VA; 240/480x120; Fuse Block Incl.	1.00	9070-TF1000D1	SQD
U335.1	AB MicroLogix PLC, 20VAC In, 12 Relay Out	1.00	1761-L32AWA	Allen Bradley
U416.1	PH Analyzer, 3 Relay Outputs, Isolated 4-20ma, TTL I/O	1.00	P63A1N1AB1N	Great Lakes
	PH Analyzer, 2 Relay Outputs, Isolated 4-20ma, 1/4 DIN	1.00	P33A1NN	Great Lakes
	PH Probe, LCP, Union Adaptor, 10' Cable	1.00	.6058P0	Great Lakes
U457.1	Conductivity Analyzer, 2 Rly Out, Isolated 4-20ma, 1/4 DIN	1.00	E33A1NN	Great Lakes
	Conductivity Sensor, Electrodeless, Polyprop., 20' Cable	1.00	.3725E2T	Great Lakes
	CPVC Adaptor w/Tee - used on 1/4 DIN GL Conductivity	1.00	MH538N3NZ	Great Lakes
U503.1	Level Control, 26K Ohm, 5s Delay, 120V, 2 Ch., Inverse, DIN	1.00	16MM1B0-00-05	Warrick
U517.1	Level Control, 26K Ohm, 5s Delay, 120V, 2 Ch., Direct, DIN	1.00	16MC1B0-05-00	Warrick
U530.1	Level Control, 100K Ohm, 120V, 2 Ch., Direct, DIN	1.00	16ME1B0	WAR
U576.1	AB MicroLogix 1500 16 Point In, 120VAC	1.00	1769-IA16	Allen Bradley
	AB MicroLogix 1500 Processor Unit	1.00	1764-LSP	Allen Bradley

CATALYTIC COMBUSTION
709 - 7th Avenue Bloomer, Wisconsin 54724
Telephone 715-568-2882 FAX 715-568-2884

CUSTOMER: LBG, Inc

DESCRIPTION: Scrubber (w/ Oxidizer)

PROJECT NO: 99216 2

DRAWING NO: 99216300 2

REVISION HISTORY

REV	DATE	ACTION TAKEN	APPR.
0	12/28/98	Submittal	
A	10/15/99	As Built (ship date)	
B	12/8/99	Field Modified #1	
C		Field Modified #2	

INFORMATION HEREIN IS THE PROPERTY OF CATALYTIC COMBUSTION CORP. ANY COPYING, TRANSMITTAL TO OTHERS, OR USE EXCEPT THAT FOR WHICH IT IS LOANED IS PROHIBITED.

BOM# 416

Dwyer® Minihelic II® Differential Pressure Gages

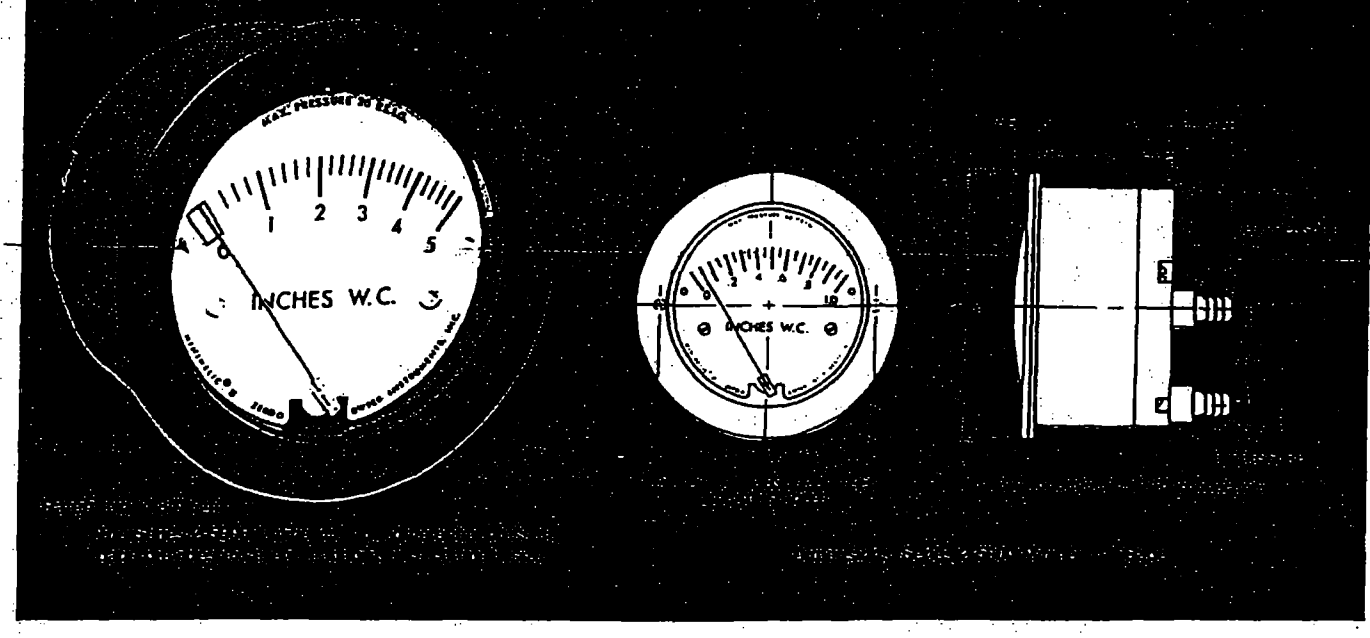

Combining clean design, small size and low cost with enough accuracy for all but the most demanding applications our Minihelic II® gage offers the latest in design features for a dial type differential pressure gage. It is our most compact gage but is easy to read and can safely operate at total pressures up to 30 PSIG. The Minihelic II® is designed for panel mounting in a single 2⅝" diameter hole. Standard pressure connections are barbed fittings for 3/16" I.D. tubing; optional ⅛" NPT male connections are also available. Over-pressure protection is built into the Minihelic II® gage by means of a blow-out membrane molded in conjunction with the diaphragm. Accidental over-ranging up to the rated total pressure will not damage the gage. With removable lens and rear housing, the gage may be easily serviced at minimum cost.

With the housing molded from mineral and glass filled nylon and the lens molded from polycarbonate, the gage will withstand rough use and exposure as well as high total pressure. The 5% accuracy and low cost of the Minihelic II® gage make it well-suited for a wide variety of OEM and user applications. OEM applications include cabinet air purging, medical respiratory therapy equipment, air samplers, laminar flow hoods, and electronic air cooling systems. As an air filter gage, the Minihelic II® finds many end use applications on large stationary engines, compressors, ventilators, and air handling units. The Minihelic II® gage is suitable for many of the same applications as the Magnehelic® gage where the greater accuracy, sensitivity, and higher and lower differential pressure ranges of the Magnehelic® gage are not required.

PHYSICAL DATA:

Ambient Temperature Range: 20° to 120°F.

Rated Total Pressure: 50 PSIG surge, 30 PSIG continuous to either pressure connection.

Accuracy: plus or minus 5% of full scale at 70°F.

Connections: Barbed, for 3/16" I.D. tubing (standard); male ⅛" NPT (optional)

Housing: Glass filled nylon; polycarbonate lens

Standard Ranges: See model-range chart

Finish: Black

Weight: 6 ozs.

CAUTION: FOR USE ONLY WITH AIR OR COMPATIBLE GASES.

PRESSURE CONNECTIONS

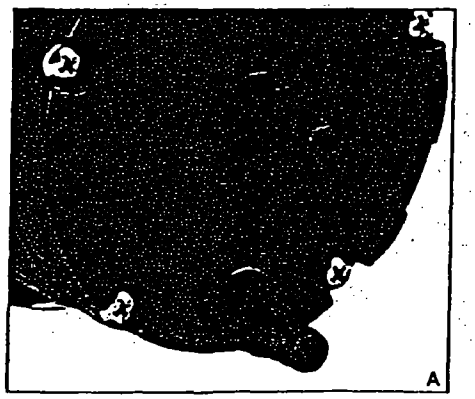

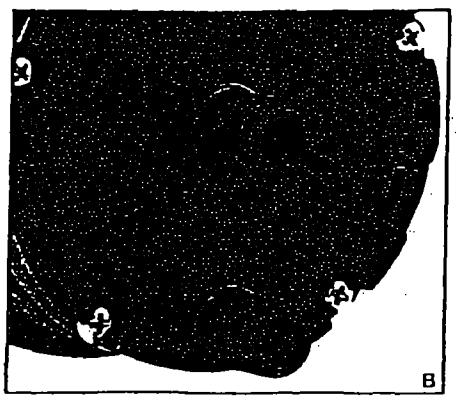

A The standard Minihelic II® gage is supplied with two barbed pressure taps molded into the rear housing of the gage. These connections allow easy, fast connection to the gage using 3/16" I.D. rubber or plastic tubing.

B For applications in systems having higher total operating pressures, optional male ⅛" NPT pressure connections can be supplied.

Note the oblong over-pressure vent hole on the back of the gage at the right of the connections. This vent is sealed by a membrane molded in conjunction with the diaphragm and will blow out at approximately 75 PSI.

Simplicity of Design Ensures Reliable Operation

Housing is molded from strong mineral and glass filled nylon.

Pointer stops of molded rubber prevent pointer over-travel without damage.

Full view lens is removable and molded of tough polycarbonate.

Aluminum scale litho-printed black on white, enhances readability.

Red tipped aluminum pointer, rigidly mounted to helix is easy to see.

Wishbone assembly provides mounting for helix, helix bearings, and pointer shaft.

Jewel bearings provide virtually friction-free helix motion.

Helix is free to rotate in jewel bearings. It aligns with magnetic field of magnet to transmit pressure indications to pointer.

Zero adjustment screw, located behind the removable lens, eliminates tampering.

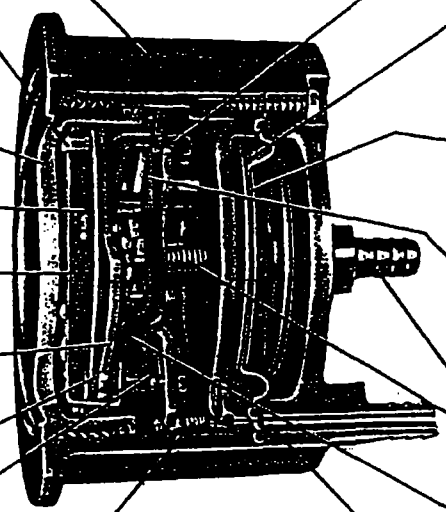

Range spring calibration clamp fixes live length of spring for proper gage calibration and is factory set and sealed.

Silicone rubber diaphragm allows accurate response to a broad range of temperatures and at extremely low pressure. Incorporates blow out area for overpressure protection.

Diaphragm support plates of lightweight aluminum on each side of the diaphragm minimize position or attitude sensitivity and help define pressure area.

Flat leaf range spring reacts to pressure on the diaphragm. Live length is adjustable for calibration. Small amplitude of motion minimizes inaccuracies and assures long life.

Low pressure tap connects to rear chamber.

Coil spring link provides a resilient connection between the diaphragm and the range spring.

Ceramic magnet mounted on a molded bracket at the end of the range spring rotates the helix without direct mechanical linkage.

High pressure tap connects with the front chamber through passageway in the plastic case and a sealing ring molded into the edge of the diaphragm.

Patent No. 4,347,744

PANEL MOUNTING

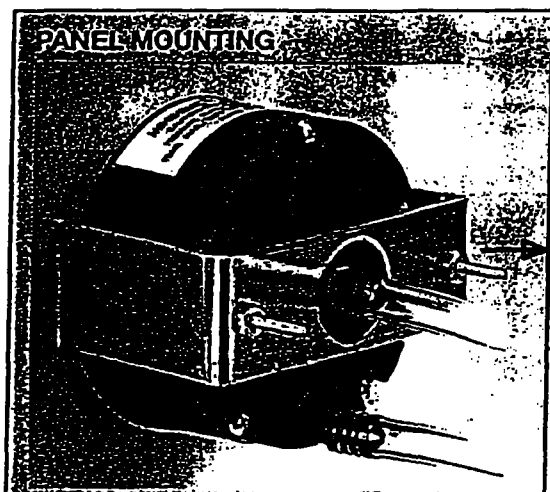

Mounting hardware is supplied with the Minihelic II® gage for panel mounting through a single hole, 2⅜" in diameter. Panel thickness up to ½" can be accommodated with the hardware supplied. If necessary, surface mounting of the gage can be accomplished by means of two 4-40 screws into the tapped mounting bracket stud holes in the rear of the gage. Surface mounting requires clearance holes in the panel for the two pressure taps.

MODEL RANGE CHART

Model Number	Range, Inches of H2O	Price
2-5000-0.5	0-0.5	$39.00
2-5001	0-1.0	39.00
2-5002	0-2.0	39.00
2-5003	0-3.0	39.00
2-5005	0-5.0	39.00
2-5010	0-10	39.00
2-5020	0-20	39.00
2-5040	0-40	39.00
2-5060	0-60	39.00
2-5100	0-100	39.00

Model Number	Range, PSI	Price
2-5205	0-5	$39.00
2-5210	0-10	39.00
2-5215	0-15	39.00
2-5230	0-30	39.00

Model Number	Range, MM of Water	Price
2-5000-25MM	0-25	$39.00
2-5000-50MM	0-50	39.00
2-5000-100MM	0-100	39.00

Model Number	Range, Pascals	Price
2-5000-125Pa	0-125	$39.00
2-5000-250Pa	0-250	39.00
2-5000-500Pa	0-500	39.00

Model Number	Range, kPa	Price
2-5000-1kPa	0-1	$39.00
2-5000-3kPa	0-3	39.00

Accessories

A-434 Portable Kit $19.90
A-497 Surface Mtg. Brkt. .. 2.50
A-609 Air Filter Kit 27.40

*THIS RANGE EMPLOYS SPIRALLY WOUND BERYLLIUM COPPER BOURDON TUBE POINTER DRIVE MECHANISM.

NOTE: CONSULT FACTORY REGARDING AVAILABILITY OF ADDITIONAL RANGES.

For optional ¼" NPT male connections, add suffix -NPT to model numbers listed above. Example: 2-5001-NPT. No extra charge. Allow additional lead time.

Suggested Specification:

A differential pressure page for measuring (state purpose) shall be installed. Gage shall be diaphragm actuated, round dial type, 2⅞" O.D., black scale markings on a white background, pointer zero adjustment, and (state type) pressure connections. Gage shall be Dwyer Instruments, Inc. Minihelic II®, Catalog No.___ reading to___" w.c. in ___" divisions.

WIKA

Industrial & Stainless Steel Gauges

BOM# 418

Type 232.54 2½" & 4"

- STAINLESS STEEL WETTED PARTS
- STAINLESS STEEL CASE & BAYONET RING
- FIELD LIQUID-FILLABLE

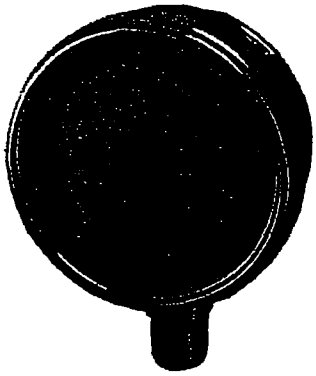

WIKA Type 232.54 stainless steel gauges offer the same advantages of the Type 232.53 gauge, but with the added benefit of a bayonet-type ring. This allows for easy resetting of the adjustable pointer for recalibration. Type 232.54 gauges feature 316 stainless steel wetted parts and 304 stainless steel case and bayonet ring, an adjustable pointer, a laminated safety glass window, and can be liquid-filled in the field. (See Type 233.54 in the Liquid-Filled Gauges section)

WIKA stainless steel gauges are ideal for process, chemical, and petrochemical applications; oil exploration and production; power generation; pollution control equipment; and any other application requiring fine quality, long lasting pressure measurement instrumentation.

STANDARD FEATURES

Sizes: 2½" (63 mm)
4" (100 mm)
Case: 304 SS
Bayonet Ring: Polished SS
Wetted Parts: 316 SS
Window: Safety glass
Dial: White aluminum
Pointer: Black, adjustable
O-ring: EPDM
Accuracy: ± 1.5% of span (2½")
± 1.0% of span (4")
ASME B40.1 Grade 1A

The standard EPDM o-ring is suitable for glycerine or silicone liquid fills.

Options Available from Inventory
Stainless steel front flange (FF)
Stainless steel rear flange (RF)
U-clamp bracket for panel mounting (UC)
Stainless steel restrictor

ABBREVIATIONS
LM - Lower Mount
CBM - Center Back Mount
LBM - Lower Back Mount

* Items shown with part numbers are available from stock (subject to prior sale).
* Items shown without part numbers are available on special order. Minimum order quantities may apply.

STANDARD RANGES AND PART NUMBERS

Type	232.54					
Size	2½"					
Connection	LM			CBM		
Conn. Size	1/4" NPT					
Press. Scale						
30 "Hg	9744827	9735245	9694531	9745068		9694778
30"-0-30 psi	9744843		9694557	9745084		
30"-0-100 psi	9744860		9694574	9745106		
30"-0-200 psi	9744886		9694590	9745122		
30 psi	9744908	9735122	9694612	9745149	9735262	9694795
100 psi	9744924	9735148	9694638	9745165	9735288	9694816
200 psi	9744940		9694655	9745181		9694833
400 psi	9744967		9694671	9745203		9694859
800 psi	9744983		9694697	9745220		
1,500 psi	9745009	9735199	9694719	9745246	9735335	9694884
3,000 psi	9745025	9735203	9694735	9745262	9735343	9694905
10,000 psi	9745041	9735229	9694752	9745289	9735369	9694922

WIKA

Bimetal Thermometers

Type A5300 3"
Type A5301 5"

BOM# 419

- STAINLESS STEEL CASE
- HERMETICALLY SEALED
- ADJUSTMENT SCREW STANDARD

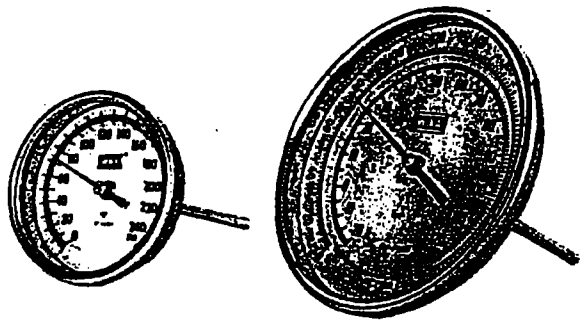

WIKA Bimetal Thermometers are ideal for most rugged industrial temperature measurement applications. The hermetically sealed case offers protection from weather and dust. The bimetal helix is coated with a viscous silicone to minimize pointer oscillation and improve temperature transmission.

Standard stem lengths up to 24" and custom lengths of up to 72" are available with a 3" or 5" dial size.

Standard Features

Sizes: 3" (A5300)
5" (A5301)
Case & Stem: 304 stainless steel
Window: Flat instrument glass
Dial: White aluminum
Pointer: Black aluminum
Accuracy: ± 1.0% of span
Scale: Dual scale °F/°C
Single scale °F

External zero adjustment

STANDARD RANGES AND PART NUMBERS

Type	A5300 3"				
	Single Scale				
Connection	CBM				
Process Conn.	1/2" NPT				
Stem Length	2 ½"	4"	6"	9"	12"
Temperature Ranges (Fahrenheit)					
-40/120 °F	9791111	9791162	9791243	9791332	9791413
[redacted]	[redacted]	[redacted]	[redacted]	[redacted]	[redacted]
0/250 °F	~~9791437~~	9791188	~~9791269~~	~~9791358~~	~~9791439~~
[redacted]	[redacted]	[redacted]	[redacted]	[redacted]	[redacted]
50/300 °F	9791145	9791200	9791285	9791375	
[redacted]	[redacted]	[redacted]	[redacted]	[redacted]	[redacted]
50/550 °F	9791154	9791226	9791307	9791383	9791447
[redacted]	[redacted]	[redacted]	[redacted]	[redacted]	[redacted]
200/1000 °F			9791324	9791405	9791464

Optional Features

- Silicone liquid filling
- Acrylic or safety glass window
- 3/8" stem diameter

Type	A5300 3"				
	Dual Scale				
Connection	CBM				
Process Conn.	1/2" NPT				
Stem Length	2 ½"	4"	6"	9"	12"
Temperature Ranges (Fahrenheit & Celsius)					
[redacted]	[redacted]	[redacted]	[redacted]	[redacted]	[redacted]
0/200 °F & °C	9779850	9779868	9779876		
[redacted]	[redacted]	[redacted]	[redacted]	[redacted]	[redacted]
20/240 °F & °C		9779906	9779914	9779922	
[redacted]	[redacted]	[redacted]	[redacted]	[redacted]	[redacted]
50/300 °F & °C		9779981	9779990	8985000	
[redacted]	[redacted]	[redacted]	[redacted]	[redacted]	[redacted]
150/750 °F & °C			8985006	8985007	8985008
[redacted]	[redacted]	[redacted]	[redacted]	[redacted]	[redacted]

ABBREVIATIONS
CBM - Center Back Mount

- Items shown with part numbers are available from stock (subject to prior sale).
- Items shown without part numbers are available on special order.

DOM# 420

Limits and Alarms

Series 146

NEW PRODUCT

Series 92 REPLACEMENT

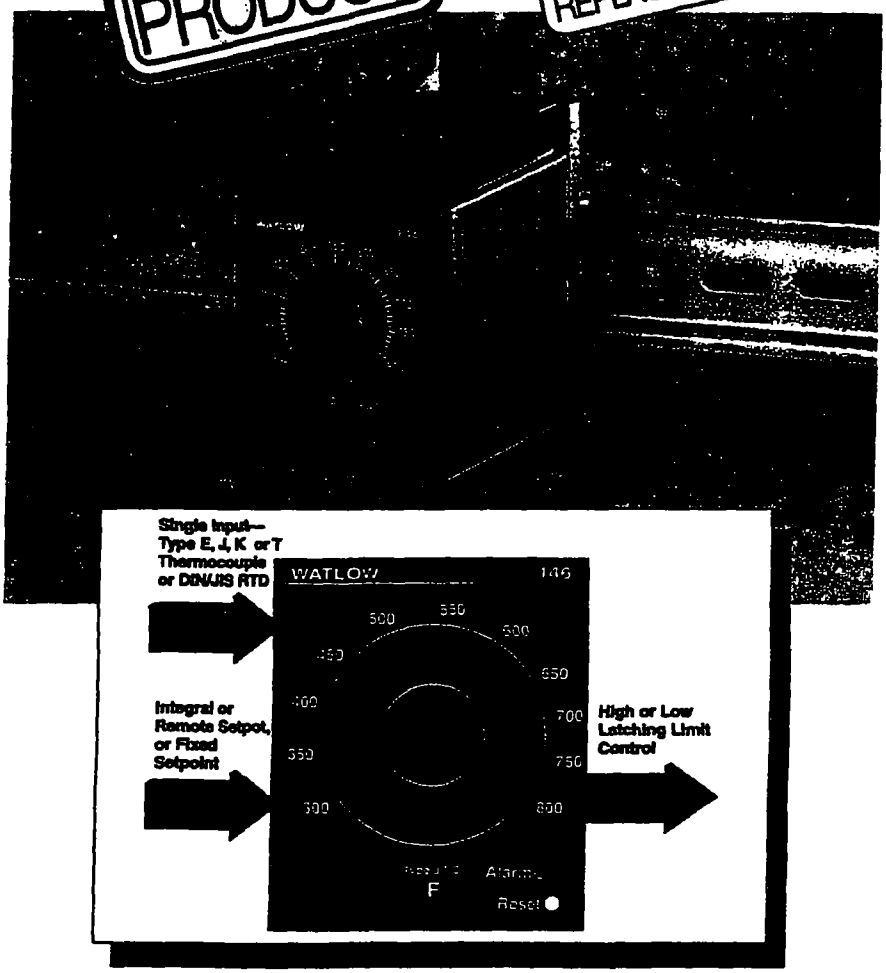

The Watlow Series 146 is a DIN rail mount, safety limit with a thermocouple or RTD sensor input. The DIN rail mounting provides for quick and easy installation with the use of simple hand tools. The limit may also be flush mounted.

The Series 146 is designed to meet the needs of a wide range of safety applications. Factory selectable options include high or low control mode with either manual or automatic reset on power loss.

The Series 146 has a LED indicator for output status and can be ordered with an integral setpot, remote setpot or a fixed set point.

Performance Capabilities

- Calibration accuracy to ±1% of span
- Operating environment 0 to 55°C (32 to 131°F)

Features

- **DIN rail mount** provides compact, cost effective control.
- **Sensor break protection** de-energizes system for safety.
- **Limit control** assures machinery and personal safety.
- **Custom ranges are available** and can be designed to your application's specific criteria.
- **Three-year warranty** provides Control Confidence®.

Applications

- High or low safety limit
- Batch process
- Furance/oven

① Electromechanical relays warranted for 100,000 closures only. Solid state switching devices recommended for applications requiring fast cycle times or extended service life.

Specifications

Control Mode

- High or low limit, factory selectable
- Manual or automatic reset on power loss, factory selectable
- Manual reset on over temperature
- Internal and/or customer supplied external reset switch

Operator Interface

- LED indication of output status
- Dial scale calibrated to compensate for sensor non-linearities
- Integral setpot
- Fixed set point
  Manufactured to specified value
- Remote setpot
- Factory selectable °F or °C temperature scale

Input

- Thermocouple or RTD available
- Thermocouple with automatic cold junction compensation
- RTD input 2- or 3-wire, platinum 100Ω @ 0°C calibrated for #3850 (DIN): 0.003850Ω/Ω°C or JIS 0.003916Ω/Ω°C curve
- Thermocouple and RTD break protection de-energizes output

Output

- Electromechanical relay① with contact suppression, 3A, Form C, SPDT: 3A @ 230V~(ac), 3A @ 30V=(dc) resistive
- Electromechanical relay with contact suppression, 10A, Form C, SPDT; 10A @230V~(ac) resistive, 5A @ 28V=(dc) resistive

Accuracy

- Calibration accuracy and sensor conformity: ±1% of span, at 77°F ±5°F (25°C ±3°C) ambient and rated line voltage ±1%

Limits and Alarms

F.O.B.: Decorah, Iowa

Series 146

- Set point accuracy: ±3% of dial scale
- Accuracy span: 1000°F (540°C) minimum
- Temperature stability: 5µV/°F (9µV/°C) ambient, maximum referred to the input
- Voltage stability: ±0.01% of span per % of rated line voltage

Agency Approvals

- UL® 873, 508, 991 File #E190020
- C-UL #24-93, File #E190020
- CE approved
  89/336/EEC Electromagnetic Compatibility Directive
  EN 50081-2: 1994 Emissions
  EN 50082-2: 1995 Immunity
  73/23/EEC Low-Voltage Directive
  EN 61010-1: 1993 Safety
  EN 60730-1: 60730-2-9
- FM 3545

Terminals

- Captive screw, cage clamp connection, 0.155 in (4 mm) maximum width screwdriver blade, 22-12 wire gauge

Mounting

- DIN rail, DIN EN50022, 35 mm x 7.5 mm
- Sub-panel flush mounting

Power

- 120V~(ac), ±10%, 50/60Hz
- 230V~(ac), ±10%, 50/60Hz
- 24V~(ac), ±10%, 50/60Hz
- 4VA power consumption

Operating Environment

- 32 to 131°F (0 to 55°C)
- 0 to 90% RH, non-condensing

Dimensions

Width:	2.28 in	(58 mm)
Height:	4.45 in	(113 mm)
Depth:	3.89 in	(99 mm)

Weight

- 0.7 lb (0.3 kg)

Ordering Information

To order, complete the code number on the right with the information below:

146 - - - - 00

Series 103 = DIN rail mount, temperature limit, electromechanical relay output.

Output Type

D = Electromechanical relay, 3A, Form C with contact suppression
E = Electromechanical relay, 10A, Form C with contact suppression

Line Voltage

1 = 120V~(ac)
2 = 230V~(ac)
3 = 24V~(ac)

Input and Range

E1	=	Type E	32	to	1470°F	(0	to	799°C)
J1	=	Type J	32	to	600°F	(0	to	315°C)
J2	=	Type J	32	to	1382°F	(0	to	750°C)
J3	=	Type J	300	to	800°F	(149	to	427°C)
J4	=	Type J	0	to	200°F	(-18	to	93°C)
J5	=	Type J	110	to	130°F	(43	to	54°C)
K1	=	Type K	32	to	2282°F	(0	to	1250°C)
K2	=	Type K	60	to	300°F	(16	to	149°C)
K3	=	Type K	32	to	1112°F	(0	to	600°C)
K4	=	Type K	32	to	150°F	(0	to	66°C)
T1	=	Type T	-328	to	662°F	(-200	to	350°C)
RTD								
P1	=		-100	to	1112°F	(-73	to	600°C)

Display Units

F = Fahrenheit
C = Celsius

Limit Mode

1 = High limit manual reset on power loss
2 = Low limit manual reset on power loss
3 = High limit automatic reset on power loss
4 = Low limit automatic reset on power loss

Set Point

1 = Integral
2 = Remote (must order dial scale separate)①
3 = Fixed (consult factory for information)

① Does not comply with EMC Directives.

UL® is a registered trademark of Underwriter's Laboratories, Inc.

BOM# 421,422 423

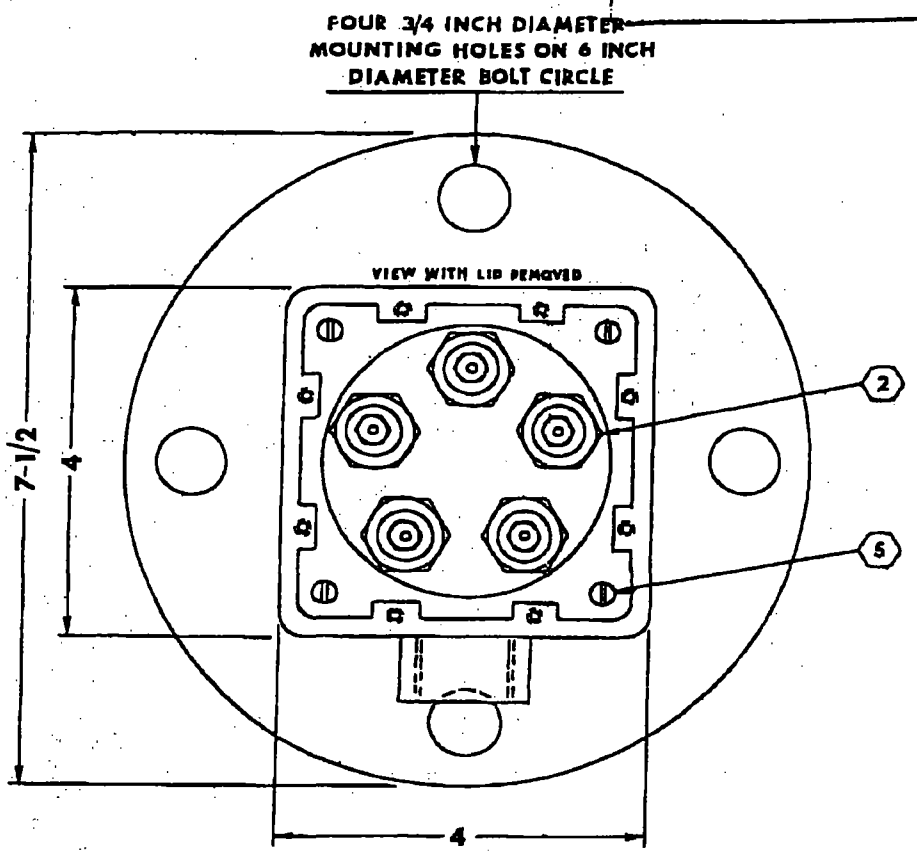

	BILL OF MATERIAL
1	FLANGE: CAST IRON P/N 3P161 RED BRASS P/N 3P162 316 SS P/N 3P163 1018 CS P/N 3P164 PVC P/N 3P165
2	ELECTRODE FITTINGS: SERIES 3B3A ON CAST IRON, RED BRASS & 1018 CS, SERIES 3B1B ON 316 SS, P/N 3P017 ON PVC.
3	GASKET P/N 3P109
4	HOUSING P/N 3P118
5	SCREW P/N 3P113
6	GASKET P/N 3P112
7	LID P/N 3P106
8	SCREW P/N 3P115

DIMENSIONAL DATA		
FLANGE	A	B
CAST IRON	3/4	1-3/16
RED BRASS	5/8	1-5/16
316 SS	5/8	1-5/16
1018 CS	15/16	1
PVC	3/4	1-3/16

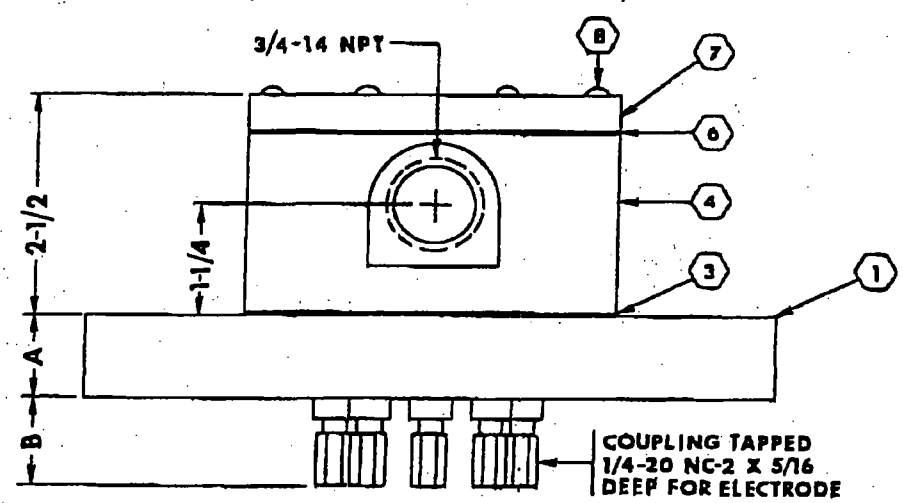

SERIES 3F5E ELECTRODE FITTING - 3" FLANGE

FLANGE MATERIAL
A - CAST IRON
B - RED BRASS
C - 316 SS
D - 1018 CS
E - PVC

A. C. LINE:	SCALE: NONE	TITLE: SERIES 3F5X ELECTRODE FITTING
DATE: 19 FEB 1970	DRWN BY: RC	
SHEET NO: 1	CHKD BY:	
CHARLES F. WARRICK COMPANY 1964 W. ELEVEN MILE RD., BERKLEY, MICH.		DRWG. NO: B3012D

BOM# 424

Model V6 Low Flow Field Adjustable

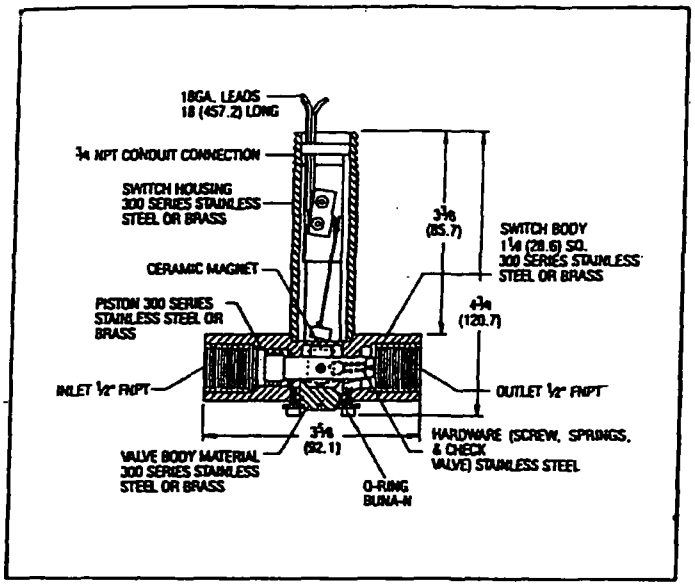

V6 LOW FLOW WITH FIELD ADJUSTABLE ACTUATION POINT

The Low Flow V6, like the standard model, features a leak-proof solid brass lower housing and magnetically actuated snap switch. The machined tee is available in brass or stainless steel with all wetted parts of like materials and Buna-N or optional Viton O-rings. The actuating mechanism is a plunger opposing a spring with an adjustable bypass valve to set the actuation rate. Piping connections are ½" NPTF for in-line mounting. Units are explosion-proof and rated to 1450 psig. UL, CSA and CENELEC listings match standard V6. Weight 1½ lbs. (.7 kg) CSA/CENELEC models include optional junction box.

MIN-MAX FLOW RATES IN ½" PIPE		
MEDIA	ACTUATE	DEACTUATE
GPM – Water	.04-0.75	.03-0.60
MPHR – Water	.01-0.17	.007-.136
SCFM – Air	.18-2.70	.15-2.0
NMPS – Air	.0001-.0013	.0001-.001

Pressure drop (head loss) is a function of both set point and flow rate. Typically, pressure drop at actuation flow rate listed will be 5 – 10 PSID. Pressure drops at other flow rates will vary in proportion to the (change in flow)².

Model Number	Lower Housing	Tee	Max. Press. psi (kg/cm²)	Price
~~V6-EPB-B-S-LF~~	~~Brass~~	~~Brass~~	~~1450 (102)~~	~~$149.00~~
V6-EPB-S-S-LF	St. Steel	St. Steel	1450 (102)	147.00