REMEDIAL DESIGN WORK PLAN
MERCURY REFINING
SUPERFUND SITE
COLONIE, NEW YORK

Prepared for

Mercury Refining Company Remedial
Design Group

June 2010

347040

REMEDIAL DESIGN WORK PLAN
MERCURY REFINING SUPERFUND SITE
COLONIE, NEW YORK

Prepared for

Mercury Refining Company Remedial Design Group

June 2010

Project Number: 137692.002.001

BROWN AND CALDWELL

Associates

110 Commerce Drive
Allendale, New Jersey 07401

234 Hudson Avenue
Albany, New York 12210

TABLE OF CONTENTS

APPENDICES II

LIST OF FIGURES III

LIST OF ACRONYMS IV

1. INTRODUCTION 1-1
   1.1 Background 1-1
   1.2 Organization of the RDWP 1-1

2. BACKGROUND 2-1
   2.1 Site History and Description 2-1
   2.2 Site Geology and Hydrogeology 2-2
   2.3 Previous Investigations and Actions 2-2
   2.4 Remedial Action Objectives 2-4
   2.5 Selected Remedy 2-5

3. PROJECT MANAGEMENT 3-1

4. REMEDIAL DESIGN ACTIVITIES 4-1
   4.1 Description of Remedial Activities 4-1
   4.2 Description of Remedial Design Activities 4-3
   4.3 Remedial Design Investigation 4-3
      4.3.1 Sampling Grid Layout 4-5
      4.3.2 Pre-Design Investigation Soil Removal 4-5
      4.3.3 Sewer Investigation 4-7
      4.3.4 Sediment Delineation Sampling 4-7
      4.3.5 Geotechnical Investigation 4-8
      4.3.6 In-Situ Stabilization/Solidification (ISS) Investigation 4-9
      4.3.7 Soil Vapor Investigation 4-14
      4.3.8 Ecological Monitoring Baseline Investigation 4-15
      4.3.9 Survey 4-17
      4.3.10 Investigation-Derived Waste Management 4-17
      4.3.11 Decontamination Procedures 4-18
   4.4 Treatability Study of Solidification/Stabilization 4-18
   4.5 Development of Plans and Specifications 4-20
   4.6 Development of Air Monitoring Plan 4-21
   4.7 Development of Construction Quality Assurance Project Plan 4-22
   4.8 Development of Plan for Institutional Controls 4-22
   4.9 Development of Site Management Plan 4-23
   4.10 Development of Plans for Sampling Fish, Surface Water and Sediment 4-23

4.11 Preparation of Remedial Design Reports 4-23
4.11.1 Pre-Remedial Design Delineation Report 4-23
4.11.2 Preliminary Remedial Design Report 4-24
4.11.3 Draft Final Remedial Design Report 4-25

5. ACCESS AND OTHER APPROVALS 5-1
5.1 Access Approvals 5-1
5.2 Waste Disposal Approvals 5-1
5.3 Permits 5-2

6. HEALTH AND SAFETY CONTINGENCY PLAN 6-1

7. SCHEDULE 7-1

8. REFERENCES 8-1

APPENDICES

Appendix A Quality Assurance Project Plan (QAPP)
Appendix B Treatability Study Work Plan
Appendix C Green Remediation Plan
Appendix D Health and Safety Contingency Plan

LIST OF FIGURES

Figure 2-1 Site Location Map
Figure 3-1 Organizational Chart
Figure 7-1 Project Schedule

LIST OF ACRONYMS

AMP	Air Monitoring Plan
BERA	Baseline Ecological Risk Assessment
bgs	Below ground surface
CQAPP	Construction Quality Assurance Project Plan
ERA	Ecological Risk Assessment
GRP	Green Remediation Plan
HSCP	Health and Safety Plan and Contingency Plan
HHRA	Human Health Risk Assessment
NPL	National Priorities List
NYSDEC	New York State Department of Environmental Conservation
NYSDOH	New York State Department of Health
NYSWQS	New York State Water Quality Standard
PCBs	Polychlorinated Biphenyls
PM	Project Manager
POTW	Publicly Owned Treatment Works
PRDR	Preliminary Remedial Design Report
QA	Quality Assurance
QAO	Quality Assurance Official
QAPP	Quality Assurance Project Plan
QC	Quality Control
ROD	Record of Decision
RA	Remedial Action
RAO	Remedial Action Objective
RD	Remedial Design
RD AOC	Remedial Design Administrative Order on Consent
RDWP	Remedial Design Work Plan
SMP	Site Management Plan
SOW	Statement of Work
SPDES	State Pollutant Discharge Elimination System
SPLP	Synthetic Precipitation Leachate Procedure
TS	Treatability Study
TSWP	Treatability Study Work Plan
USEPA	United States Environmental Protection Agency

1. INTRODUCTION

1.1 Background

This Remedial Design Work Plan (RDWP) is being submitted on behalf of the Mercury Refining Company Site Remedial Design Group ("the Group") to meet the requirements of the Administrative Settlement Agreement and Order for Remedial Design and Cost Recovery (Settlement Agreement) signed by the United States Environmental Protection Agency (USEPA) and the Group on September 30th, 2009, the Statement of Work (SOW; Appendix A of the Settlement Agreement), and the Record of Decision (ROD) issued by the USEPA in September 2008. This RDWP provides the approach for the design of the remedy, as set forth in the ROD and the SOW, for achieving the Performance Standards and other requirements. Upon its approval by USEPA, this RDWP will be incorporated into, and become enforceable under the Remedial Design Administrative Order on Consent (RD AOC).

The objective of the Remedial Design (RD) is to prepare plans and specifications for the implementation of the Remedial Action (RA) meeting the criteria identified in the ROD, SOW and RD AOC. The RDWP is prepared in accordance with the Superfund Remedial Design and Remedial Action (RD/RA) Guidance (OSWER Directive No. 9355.0-4A). The RDWP includes plans and schedules for the implementation of the remedial design and pre-design tasks identified in the SOW. In addition, the RDWP includes a schedule for completion of the Remedial Design process.

Following approval of this RDWP by USEPA, the RDWP will be implemented and the Settling parties will submit to USEPA all plans, submittals and other deliverables, in accordance with the approved schedule provided in the RDWP.

1.2 Organization of the RDWP

This RDWP is organized according to USEPA regulatory guidelines for the performance of RD and RA tasks, and to satisfy requirements set forth in the ROD. Section 1 provides the context and the objectives for the RD. Section 2 presents the Site background, including the summary of Site conditions, previous investigations, remedial action objectives and the selected remedy. Section 3 presents the management strategy for the RD, which includes the identification of key organizations and individuals involved in the implementation of the RD process. Section 4 outlines the remedial design activities, including the remedial design investigation, and lists the documents that will be submitted as part of the design process. Section 5 covers the issues related to site access and permitting requirements.

Section 6 presents the Health and Safety and Contingency Plan. Schedules for the RD and RA tasks are outlined in Section 7. A list of references used throughout this report is presented in Section 8.

The following appendices are included with this Work Plan:

- **Appendix A:** Quality Assurance Project Plan (QAPP), prepared in accordance with the Workbook for Uniform Federal Policy for Quality Assurance Project Plans
- **Appendix B:** Treatability Study Work Plan (TSWP);
- **Appendix C:** Green Remediation Plan (GRP); and
- **Appendix D:** Health and Safety Plan and Contingency Plan (HSCP).

2. BACKGROUND

This section provides a description of the site features, history, geology and hydrogeology, and a summary of the site investigation activities performed to date. Remedial action objectives established in the ROD are identified and an overview of the ROD-Selected Remedy and the remedy components are provided.

2.1 Site History and Description

The Mercury Refining Company Superfund Site (Site) has been described in numerous previous documents, including the ROD. The following provides an overview.

The former Mercury Refining Company, Inc. (MERECO) Property occupies approximately 0.68 acre at 26 Railroad Avenue on the border of the Towns of Guilderland and Colonie, Albany County, New York (Figure 2-1). The areas to the north, east, and west of the MERECO Property are principally light industrial with some commercial use and warehousing. Neighboring properties are Albany Pallet and Box Company (Albany Pallet) to the north, Allied Building Products Corporation (Allied Building) to the east, and Diamond W Products Incorporated (Diamond W) to the west. A CSX Railroad right-of-way is located south of the Property. A portion of an unnamed tributary to Patroon Creek (the Unnamed Tributary) is located immediately south of the MERECO Property; this tributary discharges into Patroon Creek approximately 1600 feet downstream of the MERECO Property. Another approximately 0.7 mile downstream, a dam in the Creek forms the I-90 Pond. The Unnamed Tributary receives stormwater drainage from the southern edge of the MERECO Property

The area is generally commercial and light industrial. The closest residence is located approximately ¼ mile north of the Site.

The MERECO parcel was used to reclaim mercury from mercury batteries and other mercury-bearing materials, such as thermometers, fluorescent bulbs, spill debris, and dental amalgams. The recovered mercury was then refined and marketed. The retorts were contained in the old Retort Building located just north of the Container Storage Building. MERECO also collected and brokered silver powders and small quantities of other precious metals. Before 1980, waste contaminated with mercury was dumped over an embankment of the Unnamed Tributary. From 1980 to 1998, waste batteries and other mercury-containing materials were stored in drums on wooden pallets within paved areas of the MERECO Property prior to disposal.

The Site is defined by the extent of contamination associated with MERECO's past reclamation processes and includes the MERECO Property, the western portion of the Allied Building Property, the southern portion of the Diamond W Property, the southern portion of the Albany Pallet Property, and the Unnamed Tributary.

The northeastern portion of the MERECO Property is currently covered by a single-layer concrete and asphalt cap that reduces rain water infiltration and prevents direct contact with underlying mercury-contaminated soils. The southern portion of the MERECO Property is covered by a single-layer clay cap which was installed after the excavation and off-site disposal of mercury- and polychlorinated biphenyl (PCB)-contaminated soils in 1985. The MERECO Property currently includes two buildings and is surrounded by a chain link fence. One of the buildings, the Phase 1 Building, houses the past and current

operation of MERECO (processing and recovery of precious metals). The other building, called the Container Storage Building, has been used to store incoming material for processing in the Phase 1 Building. A commercial asphalt roadway and a wide business driveway provide access to the MERECO Property.

2.2 Site Geology and Hydrogeology

The Site is located next to a small unnamed tributary stream of Patroon Creek, which discharges into the Hudson River located approximately five miles downstream of the Site to the east. The Site overlies a thick succession of unconsolidated glacial till, pro-glacial lake silt and clay, fluvio-glacial silts, sands, and gravel deposits, and artificial fill. These are complex interbedded deposits measuring up to 200 feet thick in the area of the Site. Above the pro-glacial Lake Albany Silt and Clay Unit (LASC), which is thick and locally extensive, the Silt and Sand Unit, a laterally continuous sand-rich fluvio-glacial deposit was encountered; this unit contains discontinuous thin layers of poorly permeable clay. Locally, a permeable ice-contact sand and gravel deposit exists beneath the lake silt-clay, underlain by till and shale bedrock of poor permeability. A deep confined aquifer occurs in ice-contact deposits beneath the Lake Albany Silt and Clay, which isolates the deeper aquifer from the shallow aquifer. The Silt and Sand Unit, consisting of sands, silts and clays of the overlying LASC unit, constitutes the shallow unconfined aquifer at the Site. The thickness of the shallow aquifer beneath the Site is approximately 60 to 70 feet. All of the existing monitoring wells are screened in the upper aquifer unit, either just below the water table at about 10 to 20 feet below ground surface (bgs) or approximately 10 to 20 feet above the silt-clay confining layer. Published reports for the Site area's glacial geology suggest the shallow aquifer likely thickens and deepens towards the west as the underlying lake silt-clay confining unit thins westward.

The water table is about 10 feet bgs and groundwater flows in a southwesterly direction toward the unnamed stream. According to the regional water level measurements, the predicted regional groundwater flowpath is to the south-southeast, towards Patroon Creek. Therefore, the proximity of the stream to the Site has a localized effect on the slope of the water table. In addition, groundwater-surface water interaction investigations of the unnamed stream indicate groundwater is discharging to the stream. Consequently, site-derived groundwater likely discharges to the unnamed stream and has the potential to reach Patroon Creek further to the southeast.

2.3 Previous Investigations and Actions

A number of investigations and remedial actions have been completed over the past three decades. These have been described in detail in the RI and other Site documents. They are summarized here:

- **1981 and 1982:** Initial sampling performed by the New York State Department of Environmental Conservation's (NYSDEC's) Division of Fish and Wildlife; it indicated the presence of PCBs and mercury contamination in soils on the southern edge of the MERECO Property and on the embankment to the Unnamed Tributary, in soils at the MERECO Property, and in contamination in Creek sediments (mercury)
- **1983:** the Site was placed on the federal National Priorities List (NPL); the NYSDEC assumed the role of lead
- **1985:** Pursuant to a Consent Judgment entered into between MERECO and New York State, MERECO excavated and removed approximately 2,100 cubic yards (cy) of mercury-contaminated soils and debris, and 300 cy of PCB-contaminated soils, from contaminated areas at the MERECO Property and from the (former) Owasco River Railway Property (now CSX railroad) south of MERECO's Property line. The excavated area was backfilled with clean fill and covered with a clay cap. Contaminated soil found beneath

the old Retort Building was sealed with plastic sheeting and left in place. A concrete cap was also poured over the portion of the MERECO Property, which now serves as the floor of the Container Storage Building, which was constructed in 1989. Four monitoring wells were installed.

- **1985-1990:** Fish monitoring was conducted downstream of the Site in the I-90 Pond (1985, 1986, 1987, and 1990).
- **1989:** MERECO entered into an Administrative Order on Consent with NYSDEC (June 9th) for investigation and remediation of mercury, including Patroon Creek.
- **1989:** A fire destroyed the Hand Shop building which was located on the eastern portion of the Property, and which was used for storing and housing mercury purification operations and for processing silver oxide batteries. Approximately 224 cy of charred building material and debris were disposed off site. Mercury soil hot spots from the former Hand Shop building area were subsequently removed.
- **1989:** NYSDEC collected numerous surface soil, sediment, and surface water samples during (spring, summer, and fall (RI Report, Section 1.5, Tables 1-1, 1-7, 1-10, Apx A, Maps A-J). Most of the sediment and surface water samples were from the Patroon Creek watershed (i.e., from Rensselaer Lake to the Hudson River, including Inga's Pond, the Unnamed Tributary adjacent to the Site, and the I-90 Pond).
- **1991:** The Hand Shop building was replaced with the Phase 1 building, which is currently used by MERECO as an office and for processing incoming precious metal-containing materials.
- **1991:** A fire occurred in the Break Trailer (April 10th) that was located in the western portion of the MERECO Property. The fire also spread to an adjacent storage trailer. A portion of the Break Trailer had been used for manual sorting and weighing of incoming mercury-containing materials to be processed.
- **1993:** Another Order on Consent was signed by MERECO and NYSDEC (February). The 1993 Order called for the establishment of a schedule for the completion of all activities, a permanent remedy for the abatement of emissions and migration of pollutants, quarterly groundwater monitoring for ten years, remediation/removal of contaminated soils beneath the old Retort Building and long-term monitoring. Groundwater monitoring was initiated.
- **1994:** Construction of the new retorts in the Phase 1 Building was completed (February 15th). The retorts were fitted with reportedly state-of-the-art air pollution control equipment. MERECO demolished the old Retort Building and installed an asphalt and concrete cap over the area. At this time, MERECO dismantled a stainless steel trailer that had been located just north of the old Retort Building.
- **1995:** MERECO conducted a soil investigation beneath the asphalt and concrete cap (RI Report, Section 1.5, Table 1-2, Apx A Figure 2 – Soil Sampling Grids). The investigation found visible free phase mercury in the soil from just below the concrete to depths of up to 18 feet.
- **1996:** MERECO received a Hazardous Waste Corrective Action Management Permit pursuant to the Resource Conservation and Recovery Act (RCRA) from NYSDEC (December 31st) for controlling the generation and storage of waste at the MERECO Property and for completing the investigation and remediation of contamination at the Property and surrounding areas. All unfinished work required by the previous Orders were incorporated into the permit.
- **1997:** MERECO conducted additional On-property (August) and off-property (December) subsurface soil sampling (RI Report, Section 1.5, Table 1-4, Apx A Figure 2 – Soil Sampling and Catch Basin Locations). In September 1997, PTI Environmental Services conducted a field investigation in the Patroon Creek watershed on behalf of MERECO including surface, sediment, and crayfish sampling along with a habitat quality
- **1997-1999:** MERECO hired Kiber Environmental to conduct treatability studies for two potentially suitable technologies: physical treatment and in situ (in place) stabilization/solidification.

- **1998:** NYSDEC approved MERECO's work plan for implementing the treatability studies (April).
- **1999:** MERECO conducted the treatability studies.
- **1999:** NYSDEC requested that USEPA take over as lead agency for the Site under CERCLA (November).
- **2000:** USEPA initiated a Remedial Investigation (RI)/Feasibility Study (FS; September).
- **2001-2004:** CDM Federal Programs Corporation (CDM), on behalf of EPA, conducted several investigations as part of the RI, including sampling of groundwater, surface soil, subsurface soils, stream surface water, sediment, and fish.
- **2003:** CDM completed a Human Health Risk Assessment (HHRA; June).
- **2003:** CDM completed the RI Report (December).
- **2005:** CDM completed an Ecological Risk Assessment (May).
- **2005:** A bench-scale study was undertaken for USEPA by Mississippi State University to assess if the applicability of electrochemical treatment technology to mercury removal from Site soils and groundwater.
- **2008:** CDM completed a Feasibility Study (January).
- **2008:** USEPA issued the Record of Decision (September 30th)
- **2009:** The Mercury Refining Site Remedial Design Group executed a Consent Order/Statement of Work (SOW) to perform a Remedial Design for the Site (September 30th, effective October 5th).
- **2009:** USEPA issued an authorization to proceed with the Remedial Design (October 15th).

2.4 Remedial Action Objectives

Studies indicate that surface and subsurface soils, as well as ground water at the Site are contaminated with mercury. The baseline HHRA indicates that mercury does not pose a risk under current Site conditions, but poses a potential future health risk to site workers (ingestion and direct contact with soil) and to the public (ingestion of ground water as a water supply). The following RAOs have been identified for the Site's soil and ground water:

- Prevent or minimize potential future human exposures, including ingestion and dermal contact with mercury-contaminated soils in excess of 5.7 mg/kg, which is based on the New York State Soil Cleanup Objective for industrial use (6 NYCRR Part 375).
- Prevent or minimize potential ingestion of mercury-contaminated groundwater and minimize mercury contamination in soils as a source of ground water contamination at the facility. The cleanup level will be applied to the subsurface in the aquifer where the groundwater has dissolved mercury concentrations in excess of the New York State Water Quality Standard (NYSWQS) of 0.7 μg/L.

The BERA indicates that the detected concentrations of mercury in sediments within the Unnamed Tributary present risk to ecological receptors. The RAO identified for sediments is:

- Remediate mercury-contaminated sediments in the Unnamed Tributary to levels that are protective of the biota such that the most significant impacts are eliminated.

2.5 Selected Remedy

Based on the results of the RI/FS for the Site and the criteria identified for evaluation of alternatives, the USEPA selected a remedial approach based on the excavation and disposal of mercury-contaminated soils above the water table; in-situ stabilization/solidification for mercury-contaminated soils constituting a source of ground water contamination; and excavation and disposal of mercury-contaminated sediments from the Unnamed Tributary. The components of the selected Remedy are:

- Excavation and off-site disposal of surface soils and subsurface soils above the water table from the Mercury Refining Property and adjoining properties (i.e., Albany Pallet, Allied Building, and Diamond W) which exceed the cleanup level for mercury in soil of 5.7 parts per million (ppm) for industrial property usage. These soils also include the soils associated with the stormwater sewer / catch basin system. Verification sampling will be performed to confirm the effectiveness of the remedy. Clean soils will be backfilled into the excavated areas.
- Solidification/Stabilization involving mixing or injection of treatment agents at the Mercury Refining and Allied Building properties to immobilize contaminants in surface, subsurface soils, and soils below the water table where the groundwater has a dissolved mercury concentration which exceeds the cleanup level of 0.7 parts per billion (ppb) of mercury in groundwater. Pilot testing will be performed before treatment and verification sampling will be performed after treatment to confirm the effectiveness of the remedy in immobilizing contaminated soils and achieving groundwater standards.
- Imposition of environmental controls in the form of environmental easements/restrictive covenants to restrict future development/use of the Site. Specifically, environmental easements/restrictive covenants will be filed in the property records of Albany County. The easements/covenants will at a minimum: (a) limit the Site to industrial uses; (b) preserve the integrity of the existing clay cap on the southern portion of the Mercury Refining Property; (c) preserve the integrity of the solidified/stabilized mass; (d) prevent the excavation of soils which lay beneath the Phase 1 Building, which housed the Mercury Refining's operations, and the Container Storage Building, which was used to store incoming mercury bearing material for processing, unless the excavation follows the Site Management Plan (see below); and (e) restrict the use of groundwater as a source of potable water until groundwater quality standards are met.
- Development and implementation of an EPA-approved Site Management Plan (SMP). The SMP will, among other things, address long-term operation and maintenance (O&M) of the Site, and future excavation of soils, including, but not limited to, soils beneath the Phase 1 and Container Buildings on the Mercury Refining Property, and soils on the Albany Pallet Property, the Allied Building Property, and the Diamond W Property, which will not be remediated by this remedy, to insure that the soils are properly tested and handled to protect the health and safety of workers and the nearby community. The approved SMP will also require an evaluation of the potential of vapor intrusion at all existing buildings on-site and/or those to be constructed in the future, and mitigation, if necessary, in compliance with the SMP. Finally, the SMP will provide for the proper management of all Site remedy components post-construction and shall include: (a) monitoring of groundwater to ensure that, following Site remediation, the contamination has attenuated and the groundwater has been remediated; (b) monitoring and maintenance of institutional controls; (c) a provision for operation and maintenance of the clay cap; (d) periodic certifications by the owners/operators of the Site properties or other party implementing the remedy that the institutional ANS engineering controls are in place; (e) a provision to manage the demolition or alteration of the existing buildings on-site, if such demolition or alteration is required in the future, to protect the health and safety of the workers and the nearby community and to ensure proper disposal of any building debris.

- Removal, dewatering and disposal of the mercury-contaminated sediments in the Unnamed Tributary exceeding the cleanup level for mercury in sediments of 1.3 ppm.
- Verification sampling will be performed to confirm the effectiveness of the remedy.
- Sampling of the fish, surface water and sediments in the Patroon Creek, the Unnamed Tributary and the I-90 Pond to assess the impact on the biota on an annual basis for five years. Sampling thereafter will be based on the results of the five annual sampling rounds, as reported within the first five-year review. Should conditions change with regard to the I-90 Pond dam (i.e., the dam is repaired, removed, or if it should fail), USEPA will evaluate the potential impact of any significant releases and, if necessary, take or require response actions to mitigate their potential impact.
- In accordance with CERCLA and because the remedy will result in contaminants remaining on-site above levels that will allow for unlimited use and unrestricted exposure, the Site remedy will be reviewed at least once every five years.

3. PROJECT MANAGEMENT

A summary of the roles and responsibilities for each individual and contact information appears in the Quality Assurance Project Plan (QAPP, Appendix A; Worksheets 3 and 6). Resumes for key project team members are included in Attachment A of the QAPP. An organizational chart for the RDWP appears as Figure3-1.

4. REMEDIAL DESIGN ACTIVITIES

This section will identify and describe the RD activities to be performed to complete the detailed design of the Selected Remedy, as described in Section 2.5. Prior to developing the RD, the extent of mercury-contaminated media exceeding stated criteria will be delineated during the Remedial Design Investigation (RDI) using field sampling. Once the RDI is complete and the collected data is reviewed, the RD will be prepared, which will include plans, drawings and specifications for implementation of the design.

The design will address excavation of soil, excavation and dewatering of sediment, off-site disposal of soil and sediment, backfilling of excavated areas, solidification or stabilization of soil, restoration of disturbed areas, and implementation of institutional controls. Additionally, the design will address Site preparation, sequencing of Site activities, environmental controls, monitoring of construction activities, quality control testing, management of residuals, and post-construction monitoring.

4.1 Description of Remedial Activities

The selected remedy includes excavation and off-site disposal of mercury-contaminated soil; excavation, dewatering, and disposal of mercury-contaminated sediment; and solidification/stabilization of soil where mercury concentrations in groundwater exceed the stated criterion.

Soil excavation. Mercury-contaminated soil exceeding 5.7 ppm will be removed via excavation, and then transported and disposed at an off-site facility. Excavated soil below the removal criteria will be stockpiled and evaluated for reuse as backfill, or otherwise disposed off-site. Clean soil will be imported from off-site as backfill. Excavation and backfill will be conducted in stages to reduce dewatering requirements and minimize odor. Air monitoring, quality control testing, and field sampling will be conducted to verify design and remediation criteria are met.

Sediment removal. Mercury-contaminated sediment in the tributary exceeding 1.3 ppm will be excavated, dewatered, and disposed at an off-site facility. Options for filtrate management will be evaluated, including off-site disposal or on-site treatment and subsequent disposal on-site or off-site. To the extent feasible, the removal activities will be conducted during low-flow conditions. Flow may be diverted around the portion of the tributary undergoing removal activities, as required. This diversion effort will likely occur through a combination of barriers, stormwater flow control structures, and pumping of water from the work area. Appropriate erosion control measures, such as silt fencing/curtains or temporary dams will also be employed as necessary to minimize solids transport downstream. Following removal, restoration of the stream bed and banks will be performed and may include the use of a rip-rap stone or other suitable cover to prevent the erosion of bank soils following removal activities.

Soil solidification/stabilization. Mercury-contaminated source soils will be solidified or stabilized in-situ where groundwater contains concentrations of dissolved mercury exceeding 0.7 ppb. In addition, as discussed below, ex situ solidification/stabilization may be considered for excavated soil (if any) that exceeds LDR standards and would be required to be disposed via retorting. Under a treatability variance, the treated soils could be disposed of at a permitted hazardous waste landfill. In-situ solidification/stabilization of the source soils and involves the mixing of Portland cement plus other materials with the soil to provide a material with improved physical characteristics. This technology can reduce the mobility of mercury and reduce hydraulic conductivity of the soil.

As stated in the ROD, the overall goal of ISS is to "[p]revent or minimize potential ingestion of mercury-contaminated groundwater and minimize mercury contamination in soils as a source of groundwater contamination at the facility. The cleanup level will be applied to the subsurface in the aquifer where the groundwater has a dissolved mercury concentration which exceeds the NYSWQS of 0.7 ppb." The feasibility and effectiveness of solidification and stabilization will be evaluated using treatability testing. Performance criteria will be established during the design process, and will take into account the results of treatability testing among other factors. Quality control testing and field sampling will be conducted to verify design and remediation criteria are met.

Institutional controls. Institutional controls, such as deed restrictions, will be used to restrict the use of the Site to industrial uses only, limit future excavation activities or soil disturbance to preserve the integrity of an existing clay clap on the southern portion of the Site and the solidified soil mass, restrict excavation of soils below the Phase I and Container Storage Buildings, and restrict the use of groundwater. Limitations of Site use will be addressed in the Site Management Plan.

Environmental controls. Environmental controls will be used during remedial activities to limit migration of contaminants and monitor the impact of intrusive activities. Controls will include:

- Air monitoring, which will be conducted in accordance with an Air Monitoring Plan (see Section 4.5), for monitoring of particulate and mercury vapor;
- Dust control as required during excavation activities, which includes covering of stockpiles, and wetting of excavated materials;
- Odor control as required during excavation activities, which could include use of foam or vapor collection and treatment;
- Erosion control, such as silt fencing or hay bales, to prevent contamination of downstream stormwater and water bodies;
- Turbidity control in the tributary, such as silt curtains or temporary dams, to prevent mobilization of disturbed sediment downstream of the area of excavation; and
- Turbidity monitoring downstream of remedial activities, including visual monitoring and sample collection and analysis, to verify turbidity control measures are effective.

Waste management. The following wastes will likely be generated from remedial activities: investigation derived wastes, excavated soils and sediment containing mercury, material associated with the storm sewer/catch basin systems including piping and concrete, and water containing mercury from excavation and sediment dewatering operations. Investigation derived wastes may include groundwater, surface water and soil, as well as used sampling and personal protective equipment, and will be drummed and characterized for proper off-site disposal. RCRA standards will be adhered to where applicable.

Excavated soils that exceed remedial cleanup criteria will contain mercury and will be characterized prior to disposal at an off-site facility. Excavated soils that are below cleanup criteria will be characterized to evaluate whether the soils can be reused as backfill. Otherwise, the soils will be disposed at an off-site facility. Based on mercury concentrations and presence of elemental mercury at the Site, some of the soils may be classified as RCRA D009 characteristic waste. As such, the treatment, storage and disposal of mercury contaminated soil may need to take RCRA land disposal restrictions (LDR) into consideration. A treatability variance may be applied for, to allow for D009 characteristic soils with total mercury concentrations above the LDR standard to be treated by *ex situ* S/S and disposed in a hazardous waste landfill. Amendments may be added to soils that will be disposed off-site to reduce moisture content or for stabilization.

Material may be generated from the excavation of mercury-contaminated soils associated with the storm sewer system and catch basins. This material may include piping, concrete and metal. This material will be staged in roll-off containers and characterized for disposal at an off-site facility.

Water will be generated from dewatering activities; however the quantity and quality will require evaluation to determine appropriate handling. Depth to groundwater in the area of soil excavation will affect the quantity of water generated. In addition, the tributary stream flow and feasibility of tributary flow diversion will affect the quantity of generated water. Water quality will be evaluated to determine appropriate handling. If quantities are sufficiently small, generated water could be disposed off-site. Large quantities of water will require treatment and subsequent disposal on-site or off-site at a disposal facility, to a local Publicly Owned Treatment Works (POTW) via sewer under a discharge permit, or to surface water in accordance with a State Pollutant Discharge Elimination System (SPDES) permit.

4.2 Description of Remedial Design Activities

Task and activities required to complete the remedial design are as follows and will be conducted according to the proposed schedule in Section 7:

- **Access Agreements** – access agreements with property owners will be sought to conduct proposed activities upon approval of the RDWP (see Section 5);
- **Remedial Design Investigation (RDI)** – the RDI will include field activities and sampling to define the extent of areas to be remediated and collect data for use in preparing the design;
- **Approvals** – approvals and permits will be sought as required to implement the remedial activities (see Section 5) and utility clearance will be conducted;
- **Treatability Testing of Solidification/Stabilization** – treatability testing will be conducted in accordance with the Treatability Study Work Plan to evaluate the technology at the bench scale;
- **Plans and Specifications** – plans and specifications will be developed for remedial activities and packaged for solicitation of bids from remedial contractors and construction of the final remedy;
- **Project Plans** – project plans will be prepared for implementation of remedial construction and post-remediation activities, which will include the air monitoring plan (AMP), construction quality assurance project plan (CQAPP), plan to implement institutional controls, Site Management Plan (SMP), , and sampling plan to assess impacts to biota in the tributary; and
- **Remedial Design Reports** – three design reports will be prepared for submission to USEPA and include the Pre-Remedial Design Delineation Report, the Preliminary Remedial Design Report, the Draft Final Design Report, and the Final Remedial Design Report.
- **Final Engineer's Cost Estimate** – the cost estimate will include all components of the remedial action and will be submitted with the Final Remedial Design Report.

4.3 Remedial Design Investigation

The ROD identified several data gaps relating to the proposed remedial activities (Section 4.1) at the MERECO Site. These data gaps will be investigated as part of a remedial design investigation. A brief summary of the investigations required to close the data gaps is provided below. Greater detail on the proposed scope of the additional field investigations proposed for the RDI are set forth in Sections 4.3.1-4.3.11 below and in the QAPP (Appendix A).

The ROD requires the excavation and off-site disposal of soils (including sediment within the on-site storm water system and surrounding soils) within the vadose zone containing concentrations of mercury in excess of 5.7 mg/kg (ppm). Elemental mercury and concentrations of mercury in excess of soil cleanup objectives have been observed in surficial and subsurface soils at the MERECO Site. The ROD divides the Site into five schematic areas (A, B, C, D, E) for the excavation of soils. The highest concentrations of mercury in soil have been observed within the eastern portion of the MERECO Site (within Area E). The distribution of mercury concentrations indicates that spills or discharges within limited areas are the likely sources. Previous delineation sampling is limited, and therefore the extent of mercury contamination in soils is poorly defined. Lateral and vertical delineation sampling will be performed to define the extent of mercury-impacted soils within the vadose zone in excess of 5.7 mg/kg (Section 4.3.1). An investigation will also be conducted within the on-site storm water system to determine the extent of impacted soils within the system and the surrounding soils.

Mercury-contaminated source soils within the saturated zone will be solidified or stabilized where groundwater contains concentrations of dissolved mercury exceeding the New York State groundwater quality standard (NYSGWS) of 0.7 μg/L. Previous groundwater quality sampling revealed only one location, MW-5D within Area E, with groundwater concentrations in excess of the NYSGQS. This is the same location within the eastern portion of the Site where the highest concentrations of mercury were detected in soil and the elemental mercury was observed in soil near the confining layer. The area(s) of impacted soil and groundwater in the vicinity of MW-5D has also not been clearly defined, and soil and groundwater investigations need to be completed to evaluate the extent of soil and groundwater impacts. Investigations will be limited to saturated zone soils, as vadose zone soil delineation will be handled under the separate investigation described above in Section 4.3.2. Delineation of the dissolved mercury plume in excess of 0.7 μg/L will be conducted via groundwater sampling and the installation of monitoring wells (Section 4.3.6).

Waste characterization sampling of the proposed excavated materials will be conducted as part of this investigation (Section 4.3.2).

A soil vapor investigation will also be conducted to evaluate the effects of solidification or stabilization on mercury vapor intrusion (Section 4.3.7).

A geotechnical evaluation will be performed to assess the implementation of the excavation and ISS remedies near the Phase 1&1A Building and the Container Storage Building foundations (Section 4.3.5).

The ROD requires that sediments within the Unnamed Tributary containing total mercury above the Preliminary Remediation Goal (PRG) of 1.3 mg/kg in sediment PRG be remediated. The impacted sediments will be excavated from the Unnamed Tributary and disposed of off site. Mercury exceeded its PRG at two sediment sampling locations near the outfall located adjacent to the MERECO property. Remaining downstream locations were below action levels; however, the next nearest downstream sample appears to be located more than 100 feet away. The lateral and vertical extent of contaminated sediments in excess of the PRG therefore needs to be delineated in the vicinity of the outfall (Section 4.3.4).

The ROD requires post-remediation sampling of the fish, surface water and sediments in Patroon Creek, the Unnamed Tributary and the I-90 Pond on an annual basis for five years. A baseline sampling program will be performed as part of the remedial design investigation (Section 4.3.8). Samples will be collected from areas where fish are observed in the tributary to Patroon Creek, Patroon Creek, and the Pond.

4.3.1 Sampling Grid Layout

Proposed sampling points (soil, sediment and/or monitoring well locations) will be located by a New York State licensed surveyor and established using stakes, flags, surveyors paint, or similar methods before the sampling event(s). Coordinates will be referenced to the State Plane coordinate system for New York using the North American Datum of 1983 (NAD 1983) in units of feet. Elevations will be referenced to the National Geodetic Vertical Datum (NGVD) of 1929 in units of feet. The surveyor will provide coordinate and ground surface elevation information for the sampling points to be staked out. Any sampling points that need to be altered based on Site conditions (i.e. subsurface refusal, utilities, etc.) or those locations not previously surveyed will be marked clearly and staked securely until such time that the locations are either surveyed or recorded onto a scaled map of the Site. Survey requirements are discussed in additional detail in Section 4.9. The survey will also include topographic and property boundary lines for the potential remediation areas addressed in the ROD.

As part of the proposed soil delineation sampling (discussed in Section 4.2 below) to be conducted within Areas A through E, sampling points will be staked out based on a 20-foot center grid. Approximately 125 locations will be staked out as part of this sampling grid. Refer to Figure 2 of the QAPP for proposed sampling locations in these Areas.

4.3.2 Pre-Design Investigation Soil Removal

Concentrations of mercury in excess of screening criteria have been detected in unsaturated (vadose zone) soils at the MERECO Site. The ROD divides the Site into four schematic areas (A, B, C, D) for the excavation of soils containing concentrations of mercury in excess of 5.7 mg/kg (ppm). A fifth schematic area (E) is designated for application of ISS in areas associated with dissolved mercury concentrations in excess of 0.7 μg/L. Depending on geotechnical and cost-effectiveness factors, some or all of the vadose zone soils in areas designated for application of ISS may be excavated in lieu of application of ISS to those soils. This decision will be documented in the preliminary design. The highest concentrations of mercury in soil have been observed within the eastern portion of the MERECO Site (within Area E). The distribution of mercury concentrations indicates that spills or discharges within limited areas are the likely sources. Given the high specific gravity of mercury, distribution in the subsurface soils is predominantly vertically downward. The deepest impacts of mercury to soils have been observed within Area E and elemental mercury has been observed at depths up to 66 feet below grade surface (ft bgs) near the surface of the Lake Albany Silt and Clay confining layer.

Previous delineation sampling is limited and therefore, the extent of mercury contamination in soils is poorly defined. Lateral and vertical delineation of soils within Areas A through E is required to determine the extent of impacted soils. The soil delineation sampling will be limited to the vadose zone soils within Areas A through E. This investigation will be completed via direct-push drilling technologies at approximately 125 locations within Areas A through E.

Drilling with direct-push technologies is a standard method of subsurface drilling which allows the recovery of representative subsurface samples for identification and laboratory testing with minimal disturbance to the samples. Depending on Site logistics, a direct-push rig (e.g., GeoProbe®, Humcane, etc.) may be used to advance borings. Continuous soil samples will be collected from each soil boring using a 4-ft macro-core sampler with a dedicated, clean acetate liner. Each 4-ft macro-core sampler will be advanced only 2 feet before retrieval to improve overall recovery and depth control within the entire direct-push boring.

Samples from each sampler will be screened in the field using a Jerome 431-X mercury vapor analyzer (MVA) readings for each sample interval will be recorded on a field log. Calibrating procedures and instructions for using an MVA will be as determined by the individual manufacturer. The samples will also be screened for noticeable signs of contamination (i.e., visible elemental mercury). Soil samples will be observed for physical properties such as color, sorting, etc. The grain size of the sampled soils will be visually characterized in the field by an experienced hydrogeologist and logged in accordance with a system after Burmister (1959). In addition, the Burmister classification will be converted to the Unified Soil Classification System (USCS) on the final boring log. Procedures for recording field data are provided in Section 5.3.1 of Appendix A.

Soils within Areas A through E will be collected for chemical analysis in continuous six-inch intervals to pre-determined depths based on prior rounds of sampling. It is estimated that continuous soil sampling will be completed within Areas A through C to depths of approximately two (2) feet below grade surface (ft bgs). , Samples collected within Areas D and E, where contamination is known to extend to deeper depths, will extend to depths of approximately ten ft bgs (Area D) or the top of the water table in Area E (10-15 ft bgs). Samples for chemical analysis will be immediately transferred from the acetate liners via the use of stainless steel scoops, trowels, or equivalent tools to appropriate laboratory-supplied containers and stored and handled according to procedures outlined in Section 5.2. Sampling equipment shall be disposed of or decontaminated after the collection of each sample in accordance with the procedures outlined in Section 4.10 of Appendix A.

Samples (including QA/QC samples) will be analyzed by Test America of Buffalo, New York for Mercury by USEPA Method SW-846 7471A. Previous data indicate that exceedances of the cleanup level (if any) are typically limited to depths of 6 inches or less. Therefore, with the exceptions listed below, the laboratory will be instructed to analyze the samples sequentially based on depth, with the two most surficial samples (0-0.5 ft. and 0.5-1.0 ft bgs) analyzed first. Analysis will continue to subsequent depths, if appropriate, until results indicate that mercury is detected at concentrations less than 5.7 mg/kg. For RDI borings at the previously sampled locations listed below, the specified deeper sample interval will be analyzed regardless of the analytical results for the shallower samples, since previous sampling results indicate there is a potential for exceedance of the cleanup level below one foot.

- Area A, RFI borings SB-25 and SB-32 (1.0-1.5 ft bgs)
- Area B, RFI borings SB-26 and SB-28 (1.0-1.5 ft bgs)
- Area B, RFI boring SBS-05 (2.0-2.5 ft bgs)
- Area C, RFI boring SB-40 (1.0-1.5 ft bgs)

Each borehole will be backfilled with clean fill (sand) or bentonite pellets upon completion and any soil not used for chemical analysis will be handled in the same manner as investigation derived waste as outlined in Section 4.10.

Waste characterization sampling will also be completed for the proposed off-site disposal of soils within Areas A through E to determine whether the proposed excavated soils could be considered a hazardous waste. Select soil samples (approximately 5%) from the delineation sampling investigation will additionally be analyzed for Toxicity Characteristic Leaching Procedure (TCLP) Mercury by USEPA Method SW-846 7470A. Samples will be selected for waste characterization sampling based on field screening results that indicate the potential for elevated mercury concentrations (e.g., elevated mercury vapor readings, visible elemental mercury). In addition, the laboratory may be instructed to perform TCLP testing on a sample material if elevated total mercury results are obtained for that sample.

4.3.3 Sewer Investigation

The original storm sewer that serviced the Mercury Refining facility was plugged and abandoned in place in 1985, during Site remediation conducted under NYSDEC auspices. The NYSDEC reportedly conducted a video survey/reconnaissance of the storm sewer system prior to its abandonment; however the whereabouts of the video tape has not been identified. At the time of the sewer abandonment, a 6-8-inch diameter PVC replacement storm sewer was constructed parallel to the original storm sewer. The current stormwater sewer/catch basin system is composed of four storm sewer sections with six catch basins. Previous sampling of the sediment within the catch basins revealed exceedances of inorganics, including mercury. The ROD requires the excavation of storm sewer sediments and surrounding soils (storm sewer bedding) with concentrations of mercury in excess of 5.7 mg/kg.

The catch basins of the current storm sewer have been plugged and the storm sewer is currently inactive.

The current storm sewer pipe will be surveyed with a video camera to determine if significant accumulations of sediment are present in the sewer pipe. To perform the video survey, the catch basins will be unsealed and/or portions of the piping opened. An excavator will be required to remove soils above portions of the sewer system and break portions of the piping. Excavated soil and sewer bedding will be temporarily stockpiled on polyethylene sheeting.

Significant accumulations of sewer sediment (if any) identified during the video survey will be immediately sampled. Sewer sediment samples (if any) will be collected from the sewer pipe via the use of a dipper or equivalent tool extended from a safe location at grade to the required sampling depths. Samples will be screened and logged in the field as described in Section 4.2. Upon completion of sewer sediment sampling the sewer excavations will be backfilled with the stockpiled material in the order it was removed (last out, first in). Sewer backfill will be tamped with the excavator bucket in 1-2 foot lifts.

Sewer bedding samples will be collected at the ten locations shown in Figure 2 of the QAPP. The bedding sampling will target the original and the current storm sewer systems, and will be conducted using direct-push (GeoProbe®) methods. Sewer bedding sample locations may be adjusted based on review of the sewer video and identification of any areas of potential exfiltration (e.g., open pipe joints or depressions in the sewer line). Sampling of surrounding sewer bedding will be biased to those areas of greatest potential exfiltration.

Samples selected for chemical analysis will be immediately transferred from the dipper via the use of stainless steel scoops, trowels, or equivalent tools to appropriate laboratory-supplied containers and stored and handled according to procedures outlined in Section 5.2. Sampling equipment shall be disposed of or decontaminated after the collection of each sample in accordance with the procedures outlined in Sections 4.10 and 4.11.

The samples will be analyzed by Test America of Buffalo, New York for Mercury via USEPA Method SW-846 7471A. One sample each of sewer sediment and bedding will additionally be analyzed for TCLP Mercury via SW-846 7470A. TCLP samples will be selected based on field screening results that indicate the potential for elevated mercury concentrations (e.g., elevated mercury vapor readings, visible elemental mercury).

4.3.4 Sediment Delineation Sampling

The ROD requires that sediments within the Unnamed Tributary containing mercury at concentrations above 1.3 mg/kg be excavated and disposed of off site.

Previous sampling of the sediments within the Unnamed Tributary revealed elevated concentrations of mercury at two locations (SD-03/SD-101), near the former storm sewer outfall located adjacent to the MERECO Property. The exceedances in sample SD-03 extend from near surface to a foot below the sediment surface, but deeper intervals were not sampled. Remaining downstream locations were below action levels. The next nearest downstream sample (SD-4) appears was located south of the culvert extending under the railroad tracks. The lateral and vertical extent of contaminated stream sediments in excess of the cleanup level will be delineated in the vicinity of the outfall and the portion of the stream upstream from the railroad culvert.

Sediment samples will be collected at the five locations shown in Figure 3 of the QAPP. Sampling will be completed in continuous 6-inch intervals to depths of approximately three feet below the sediment surface. Sediment samples will be collected in a "downstream" to "upstream" direction (i.e., in a direction opposite the flow), to minimize the chance of spreading disturbed sediment to unsampled locations.

Sediment sampling will be completed via the use of a hand corer (or equivalent device) as this method can be used to collect a relatively undisturbed sample that shows a profile of stratification. Hand coring is a method by which a stainless steel hand corer or similar device is manually pushed or hammered into the sediment to a desired depth. Prior to pushing or hammering, the core tube will be filled with water to remove air above sediment/water interface. Once at the desired depth, the corer is twisted and pulled from the sediment in one motion. Sediment samples from the sediment/surface water interface may also be collected using decontaminated stainless steel sampling scoops, trowels, or other similar devices.

Sediment samples targeted for analysis will be collected with minimum disturbance and exposure to air. The amount of sediment in the core tubes will be measured to determine depth of penetration and recovery. Samples will be screened and logged in the field as described in Section 4.2. Using a decontaminated scoop, trowel, or equivalent tool, the sediment will be transferred by selected depth intervals directly to the laboratory-supplied sampling containers and stored and handled according to procedures outlined in Section 5.2. If an acetate liner is used in conjunction with the corer, the liner will be cut and the sediment sample collected as previously described. Sampling equipment shall be disposed of or decontaminated after the collection of each sample in accordance with the procedures outlined in Sections 4.10 and 4.11.

The sediment samples will be analyzed for mercury by USEPA Method SW-846 7471A. A select number of samples (approximately 1-2 samples) will be analyzed for TCLP Mercury by USEPA Method SW-846 7470A.

4.3.5 Geotechnical Investigation

A geotechnical investigation will be performed to assess the impacts of excavation and/or in-situ stabilization on the integrity of the Phase 1 and Container Storage Buildings.

The geotechnical borings will be completed utilizing hollow-stem auger drilling methods. The borings will be advanced by rotating the augers to the desired depth into the subsurface soils. If heaving sands are encountered, clean potable water will be added to maintain a positive hydraulic head inside the auger. Boreholes will be sealed with grout by pumping it into the borehole using a tremie pipe (tremie method).

A total of 4 geotechnical borings will be completed in the vicinity of the Phase 1 and Container Storage Buildings to the top of the Lake Albany Silt and Clay confining layer (depths of approximately 65 ft bgs). The locations of the proposed borings are shown on Figure 2 of the QAPP.

Standard Penetration Tests (SPTs) will be performed in each soil boring at 5-foot intervals using a split-barrel ("split-spoon") sampler. Jar samples (8 oz.) will be collected from each SPT for later testing. All cohesive samples will be tested for estimated unconfined compressive strength with a Pocket Penetrometer. Shelby (thin-wall) tube samples will be collected at selected locations from cohesive layers, if encountered. Field sampling and testing methods are listed on Worksheets No. 21 and 22 in Attachment A. Samples will be logged as described in Section 4.2.

Laboratory testing will be performed on selected soil samples in order to provide characterization of the soils encountered in the borings and to provide input to the evaluation of the building foundation stability and bracing requirements during excavation and/or ISS. Samples will be selected for testing by a qualified geotechnical engineer based on the observed stratigraphy after the draft boring logs have been prepared. Characterization samples will be tested for moisture content, gradation (without hydrometer) and Atterberg limits (cohesive samples only). Unconfined compression and density tests will be performed on selected Shelby tube samples (cohesive samples only). The laboratory testing methods are listed on Worksheet No. 23 in Attachment A.

4.3.6 In-Situ Stabilization/Solidification (ISS) Investigation

The ROD requires that in-situ stabilization/solidification be used to immobilize mercury in surface soils, subsurface soils and soils below the water table where groundwater contains dissolved mercury concentrations in excess of 0.7 ppb. This includes soils beneath the existing asphalt/concrete cap but not soils beneath the Container Storage Building or the existing clay cap.

Previous groundwater quality sampling revealed only one location, MW-5D within Area E, with groundwater concentrations in excess of the 0.7 ppb cleanup value. This is the same location within the eastern portion of the Site where the highest concentrations of mercury were detected in soil and the elemental mercury was observed in soil near the confining layer. The area of impacted groundwater in the vicinity of MW-5D has not been clearly defined and a combination soil/groundwater investigation needs to be completed in this area to evaluate the extent of soil and groundwater impacts.

The ISS investigation will include the collection of groundwater samples from properly constructed and developed monitoring wells using low-flow sampling procedures to minimize the influence suspended solids (turbidity). For planning purposes it is anticipated that approximately two monitoring wells will be installed at each of the six (6) locations shown in Figure 2 of the QAPP, for a total of approximately 12 monitoring wells. However, prior to installation of the monitoring wells, direct-push sampling of soil and groundwater will be conducted to preliminarily screen soil and groundwater for depth intervals with elevated mercury concentrations and aid in selection of monitoring well screen depths that correspond to higher mercury concentrations.

4.3.6.1 Direct-Push ISS Investigation

A total of six (6) soil borings will be completed via direct push technologies in the approximate locations of the monitoring wells shown in Figure 2 of the QAPP. The borings will be advanced to the top of the Lake Albany Silt and Clay confining layer (depths of approximately 65 ft bgs). Continuous samples will be collected from the borings using a macro-core sampler with a dedicated, clean acetate liner as described in Section 4.2. The core barrel will be advanced the full 4 feet for this application. Samples from each split spoon will be screened in the field using an MVA and readings for each sample interval will be recorded on a field log. Calibrating procedures and instructions for using an MVA will be as determined by the individual manufacturer. The samples will also be screened for noticeable signs of contamination (i.e., visible elemental mercury, discoloration, etc.). Soil samples will be observed for physical properties such as color, sorting, etc.

The grain size of the sampled soils will be visually characterized in the field by an experienced hydrogeologist and logged in accordance with a system after Burmister (1959). In addition, the Burmister classification will be converted to the Unified Soil Classification System (USCS) on the final boring log. Field logging procedures are provided in Section 5.3.1.

Soil samples will be collected from the acetate liner of the macro-core (as described in Section 4.2) from the six-inch interval(s) with the greatest MVA readings or visual evidence of contamination (i.e., elemental mercury). Up to eight soil samples per boring/location are proposed to be collected for laboratory analysis, based on estimates of the vertical extent of the most heavily impacted zones. The actual number of samples may be decreased or increased based on the prevalence of elevated MVA readings and noticeable elemental mercury. Soil samples will be analyzed for Mercury via USEPA Method SW-846 7471A. Accelerated (24 hour) laboratory turnaround will be requested to facilitate the groundwater screening described in the following paragraph.

After receipt of the unvalidated soil analytical results, a GeoProbe® Groundwater Sampler will be utilized to collect groundwater quality samples from various intervals within the saturated zone adjacent to each of the six boreholes described above. For planning purposes it is anticipated that groundwater samples will be collected for laboratory analysis at a rate of approximately one sample per ten foot interval within the saturated zone (approximately 5 samples per hole assuming a borehole end depth of approximately 65 feet). The precise groundwater sample intervals will focus on the depths with elevated mercury levels identified through soil sample analysis and field screening.

The Groundwater Sampler will be advanced by the direct push methods (GeoProbe®) to selected intervals within the saturated zone at which time the outer casing of the sampler will be pulled back to expose a screen. Water will infiltrate the screen for a period of approximately 30 minutes (time will vary depending on the groundwater production rates of the various intervals). Based on the 2003 Supplemental RI sampling conducted with direct-push equipment, it is anticipated that the Groundwater Sampler will fill in a *reasonable* amount of time.

If the Groundwater Sampler yields a sample, a specifically designed, dedicated, disposable bailer with a check valve at the bottom will be gradually lowered until it contacts the water surface and is then allowed to fill as it slowly sinks in a controlled manner. Samples collected with bailers must be recovered with a minimal amount of aeration. Laboratory-supplied sample containers will be filled by allowing the bailer discharge to flow gently down the inside of the container with minimal turbulence. Given the turbidity that will likely be encountered with the groundwater samples obtained via this method, a filtered and non-filtered sample will be collected from each interval and submitted for laboratory analysis.

After collection of the samples, the bailer will be removed from the Groundwater Sampler and properly discarded. If the borehole remains open after retrieval of the direct-push Groundwater Sampler, the borehole will be grouted with a tremie pipe. Grout will consist of bentonite slurry to avoid elevated pH conditions potentially associated with cement/bentonite mixtures.

4.3.6.2 Hollow-Stem Auger ISS Investigation

Following review of the preliminary soil and groundwater screening data, six pairs of conventional 2" PVC monitoring wells will be installed utilizing hollow-stem auger drilling methods. Continuous 2-ft split-barrel ("split-spoon") samples will be collected from each soil boring. The borings will be advanced by rotating the augers to the desired depth into the subsurface soils. If heaving sands are encountered, clean potable water

will be added to maintain a positive hydraulic head inside the auger. Boreholes will be advanced using six inch hollow-stem augers. Using these methods will result in a borehole diameter that is greater than eight inches, or at least four inches larger than the outside diameter of the casing and well screen for a two-inch diameter monitoring well.

The overburden monitoring wells will consist of a two-inch diameter, PVC well screen (0.010-inch slot size), and a two-inch diameter PVC riser casing. Based on previous groundwater sampling conducted as part of the Feasibility Study in this area, it is estimated that shallow and deep overburden wells will be installed at each location at depths of approximately 15 and 50 ft bgs., respectively. These depths are based on the intervals of highest mercury contamination reported in the 2003 VPW samples (15', 35', and 45') and the screened interval of well MW-5D (50-60'). Well screen length will be 10 feet. The actual depths of the well screen intervals will be determined based on the intervals of greatest groundwater contamination from the direct push ISS investigation in Section 4.6.1.

The overburden monitoring wells will be constructed as follows:

- A flush-threaded, two-inch diameter, Schedule 40 PVC well screen (ten feet in length) and riser casing, will be placed to the bottom of the borehole with the screened interval extending upward to the water table. Given a desire to reduce turbidity/suspended particles in groundwater samples, the smallest available screen size that will still yield enough water for groundwater sampling will be utilized. As the augers are slowly removed, a primary filter pack consisting of clean, washed sand will be placed in the annular space around the well screen and riser casing from the base of the screen to approximately two feet above the screen. A secondary filter pack consisting of more finely grained sand will be placed above the primary filter pack at a thickness of one to two feet. Again, the size of the sand placed around the well screen will be proportionate to the size of the well screen, with the finest grain sand available used to filter and reduce the amount of suspended particles.
- Measurements of material depths will be made by frequently sounding the annulus with a weighted tape measure during installation. The volume of materials needed will be calculated and compared to the actual volume used.
- In monitoring wells which exhibit a water table elevation above the top of the sand pack, a layer of bentonite pellets, at least two feet thick will be placed above the sand pack to form an annular seal. The shallow depth of the Overburden monitoring wells should allow for placement of these materials by hand.
- In monitoring wells where the top of the sand pack is above the water table, bentonite pellets will not be used to form an annular seal, since complete hydration cannot be guaranteed. In those instances, granular bentonite will be mixed with water (as thick as possible) to form a pre-hydrated slurry which will be used in place of the pellets.
- Cement/bentonite grout will be placed from the top of the bentonite pellet (or slurry) seal to a point approximately four feet below existing ground surface. The grout will consist of one bag (94 pounds) of Portland cement and five pounds of bentonite mixed with six gallons of potable water.
- A 5-foot long, 4-inch diameter steel protective casing will be placed in the remaining annulus so that approximately two feet of its length remains above grade. Wells in highly trafficked areas of the Allied Building Products property will be completed with flush mount protective well vaults. The protective casing will be equipped with a secure lockable cap to prevent entry to the monitoring well. For additional protection, a cap will be placed on the monitoring well and a vent hole will be cut in the casing above the grout level to allow fluids to drain.
- The protective casing will be set in place with concrete. The concrete will be set in a four-foot square form at the thickness of at least four inches (4"). Steel reinforcing wire will be used within the concrete.

Drive and Wash Casing may be used as an alternate method for monitoring well installation. Under this method, 5-inch ID steel casing is advanced to isolate the surrounding formation during the boring and well construction process. Upon reaching the target depth, a 2-inch diameter PVC pre-packed well screen (0.010-inch slot size) is installed and additional sand pack material is placed in the annulus surrounding the pre-pack screen as the 5-inch casing is withdrawn. The Drive and Wash Casing method will minimize "drag down" of mercury contamination from shallower intervals, and will enable better control over the placement of the sand pack around the well screen, a key element in minimizing the migration of suspended solids into the well.

Well development will be performed using the surge and evacuate method after a period of at least 24-hours following well construction. Well development will be considered complete when there is no visible increase in the clarity of the evacuated water. Given that suspended particles in Site groundwater are known to impact groundwater quality readings for metals, additional development time will be utilized to ensure that the sand pack around the well is properly cleared.

4.3.6.3 Low-Flow Groundwater Sampling

Objectives

The objective of the low-flow groundwater procedure is to collect samples from monitoring wells while exerting minimum stress on the water-bearing formation and minimizing the disturbance of sediment in the well. The low-flow purging and sample collection technique follows the technique described within the USEPA documents titled "Ground Water Sampling Procedure, Low Stress (Low-Flow) Purging and Sampling", (USEPA, Region 2, March 16, 1998) and "USEPA Ground Water Issue: Low-flow (Minimal Drawdown) Ground-water Sampling Procedures" (EPA/540/S-95/504, April 1996). The general approach is to minimize the drawdown in the well during purging, thereby reducing disturbance prior to and during sampling. Typically this is accomplished by limiting the flow rate during purging and sampling to rates in the 100 to 500 mL/min range. The intended advantage of this procedure is the reduction in the turbidity and aeration of the samples, thereby producing samples which are more representative of the natural groundwater conditions. If well sampling or purging results do not meet the low-flow criteria (such that drawdown enters the screened zone or exceeds 0.3 feet) it will be noted in the field data sheets.

Equipment

- A submersible bladder pump.
- The discharge tubing will be laboratory- or food grade- polyethylene.
- Monitoring equipment during purging shall include a flow through cell equipped with field measuring devices for pH, turbidity, specific conductance, temperature, oxidation-reduction potential (ORP), and/or D.O.
- Water level measuring device, accurate to ±0.01 foot.
- Flow-rate measurement supplies such as graduated cylinders and stopwatch.
- Decontamination equipment and supplies.
- Well construction data.

Preliminary Site Activities

- Remove well cap and identify the pre-established elevation reference point on top of inside well casing.
- Measure and record the depth to groundwater (static water level) to within the nearest 0.01 foot from the reference point. Take care to minimize disturbance to the water column and avoid dislodging particulates attached to the sides of the well casing.

- In no case should any well be sounded prior to sampling as this may mobilize sediment in the bottom of the well.
- If dedicated equipment such as bladder pumps are not used, consideration should be given to placing the pump in the well 24 hours prior to sampling to allow any sediments in the well to settle.

Sampling Procedure

- **Install Pump** - Slowly lower the pump and downhole measuring device, as applicable, into the well to a depth corresponding to the center of the screened interval. The intake should be kept within the well screen but no deeper than two feet below the top of the screen to prevent mobilization of sediment from the bottom. If less than two feet of water is present in the well prior to sampling, the intake shall be centered in the water column. For problematic monitoring wells, consideration should be given to installing the pump approximately 24 hours before initiating purging.
- **Re-Measure Groundwater Level** - Before starting the pump, measure the water level again with the pump in the well. Do not proceed until the water level has returned to within approximately 0.3 feet of the static level.
- **Purging** - Start pumping the well at approximately 200 to 500 milliliters per minute. The water level should be monitored as frequently as feasible immediately after the start of purging and then at least as frequently as every three to five minutes once the level has generally stabilized. Ideally, a steady flow rate should be maintained which results in a stabilized water level. The goal should be to not induce a drawdown in excess of approximately 0.3 feet (or approximately 2 percent of saturated thickness in low permeability formations). Pumping rates should, if needed, be reduced to the minimum capabilities of the pump to effect stabilization of the water level. However, care should be taken to maintain pump suction and to avoid entrainment of air in the tubing. If the recharge rate of the well is very low, care should be taken to avoid loss of pressure in the tubing line, cascading through the sand pack, or pumping the well dry. Record each adjustment made to the pumping rate, observation of changes in appearance of the water collected (e.g., increased turbidity or color) and the water level measured immediately after each adjustment.
- **Monitor Indicator Parameters** - During purging of the well, monitor the following field indicator parameters at the frequencies stated above; turbidity, temperature, specific conductance, pH, ORP and/or D.O. In-line analyzers and continuous readout displays are recommended for all parameters so that the sample is not exposed to air prior to the measurement. However, if this is not feasible, temperature and/or ORP may be omitted from the list of in-line parameters. The well is considered stabilized and ready for sample collection when three consecutive readings are within a maximum range (from minimum to maximum measurements) as follows: ±0.1 for pH, 3% for specific conductance, ±10% for D.O., ±10 mV for ORP, and ±10% for turbidity. Measurement of the indicator parameters should continue every three to five minutes until these measurements indicate stability in the water quality. If the parameters have not stabilized after about an hour, purge the well until a minimum of 3 well volumes have been removed and proceed to collect the samples. This alternate procedure should be noted on the field data sheet.
- **Collect Samples** - Samples should be collected at flow rates of between 100 and 250 mL/min, or under flow conditions such that drawdown of the water level within the well is not induced beyond the tolerances specified above. If volatile organic compounds (VOCs) are to be analyzed, they should be collected first and discharged directly from the pump discharge tubing into pre-preserved sample containers. Sample containers should be filled by allowing the pump discharge to flow gently down the inside of the container with minimal turbulence.

- **Remove Pump and Tubing** - After collection of the samples, the pump's tubing shall be properly decontaminated or discarded.
- **Well Depth** - Measure and record well depth.
- **Close Down** - Secure the well.
- **Decontamination** - The sampling equipment will be decontaminated between use at each well as described in Section 4.11.

One groundwater sample will be collected from each of the newly installed wells. Groundwater and QA/QC samples will be analyzed by TestAmerica of Buffalo for mercury, arsenic, manganese and thallium via USEPA Method SW-6010B.

4.3.7 Soil Vapor Investigation

Soil vapor (SV) samples will be collected from locations adjacent to the Phase 1 Building and beneath the floor slab of the building for the purpose of establishing baseline mercury vapor concentrations in soil gas prior to pilot testing/implementation of ISS. The locations will be selected in the field based on proximity to the potential ISS location and to avoid interfering with present-day usage of the MERECO facility.

4.3.7.1 Installation of Soil Vapor Probes

Soil vapor probes will be installed from which soil vapor samples will be collected. The soil vapor probes will installed as follows:

- A direct-push drill rig (e.g., GeoProbe®) will be used to advance a 2-inch diameter borehole to a depth of 5 feet bgs.
- Once the borehole is complete a 2 foot long, 1-inch diameter PVC slotted screen (0.010") will be set in the borehole with clean silica sand filter pack material placed in the annulus surrounding the screen. The screened interval will be from 3 to 5 feet.
- A hydrated bentonite slurry will be placed in the annular space above the filter pack to provide a seal in the borehole from surface contamination and to minimize infiltration of ambient air.
- The top of the soil vapor probe will be completed with a male-threaded, appropriately sized tubing-barb to be used with the sampling tubing. The barb will be completed with a cap so that infiltration by outside air will be minimized.
- Soil vapor probes will be fitted with flush mount protective casings.

4.3.7.2 Collection of Soil Vapor Samples

Soil vapor samples will be collected no less than two weeks following the installation of the soil vapor probes. Samples will not be collected on days in which high humidity or rainfall may impact the readings from the field monitoring equipment.

- One (1) Teflon®-lined polyethylene sampling tube will be connected to the tubing-barb for use in sampling. The tube will be secured to not allow debris to clog the tube and/or potentially contaminate the sample. The sampling point will be sealed around the tubing using modeling clay.
- Prior to collecting the sub-slab soil gas sample, a "leak-test" will be performed to ensure tightness of the seal. A 3-gallon modified plastic bucket will be placed over the top of the sample point. The soil vapor sampling tube will be threaded through a gas-tight fitting in the bucket to allow for sample collection

without removing the bucket. The base of the bucket will be suitably sealed to the ground or floor surface (e.g., using bentonite clay). The bucket will have tubing at the top of the chamber to introduce the tracer gas (helium) into the chamber and a valved fitting at the bottom to let the ambient air out while introducing tracer gas. A helium detector will be attached to the valve fitting at the bottom of the chamber to verify the presence of the tracer gas. The valve will be closed after the chamber has been enriched with helium at concentrations >50%. After the test set-up, the sample point will be purged of three volumes (inner volume of sample point and sample tubing) of soil gas. Purging will be conducted using an air pump adjusted to a low rate of 200 ml/min or less. During purging, the helium concentration will be monitored at the vent of the air pump. A helium reading of greater than 5% of the concentration within the bucket surrounding the sample point is indicative of a leak in the seal. If the readings indicate a poor seal, the sample point will be reset and the leak detection process repeated until it is found to be free of leaks.

- The sampling probe will be purged for approximately 10 minutes. This is intended to exchange air from the sampling tubing, which could potentially dilute or otherwise bias the sample.
- A reading will be taken with the mercury vapor analyzer to measure mercury vapors. At locations with mercury below the detection capability of the meter, selected samples will be analyzed by Method IO-5 to quantify the lower levels.
- To collect a sample for laboratory analysis for total mercury by IO-5, gold-coated bead traps will be used with a Teflon particulate filter before the trap so that no particulate can be trapped and skew results. When assembling, installing and removing the traps particle-free gloves will be worn at all times and samplers will stand down-wind to prevent contamination by shedding particles from clothing, etc.
- The trap with filter will be connected to a pump which will draw air through the trap at a constant rate of 0.3 L/min. The calibrated range of the method is 5 ng to approximately 7.5 mg depending on the variety of trap used in sampling. Therefore, to target the method range, the pumping duration will likely be the minimum practical.
- The samples will be sent to Frontier Geosciences of Seattle, Washington for analysis.

4.3.8 Ecological Monitoring Baseline Investigation

In order to assess future impacts on biota after the mercury-contaminated sediments are removed from the unnamed Tributary, a monitoring program will be implemented for a period of 5 years following remediation. This monitoring program will include sampling sediment, surface water and fish tissue in the Patroon Creek, the unnamed Tributary to Patroon Creek and the I-90 Pond. Prior to implementing this monitoring program, one round of sampling will take place during the Pre-Design Investigation to establish a baseline for future sampling. The data objectives for the stream sampling program are:

- Sediment: to confirm that surface concentrations stay below the 1.3 ppm cleanup objective;
- Surface water: to monitor dissolved mercury concentrations over time and;
- Fish: to monitor mercury bioaccumulation in biota over time.

4.3.8.1 Downstream Sediment Sampling

Two sediment samples will be taken in the unnamed tributary, downstream of the sediment delineation area discussed in Section 4.4, at the RI sample locations SD-04 and SD-05 (locations MR-SD-06 and MR-SD-07 in Figure 4 of the QAPP). Two sediment samples will also be collected from Patroon Creek, at RI sample locations SD-07 (just downstream from the confluence with the unnamed Tributary) and SD-08 (locations MR-SD-08 and MR-SD-09 in Figure 4). Two sediment samples will be taken from the I-90 pond as well, one

at RI sample location SD-10 and one at RI sample location SD-11 (locations MR-SD-10 and MR-SD-11 in Figure 4 of the QAPP). Sampling will be completed to a depth of approximately six inches below the sediment surface. Sediment samples will be collected in a "downstream" to "upstream" direction (i.e., in a direction opposite the flow), to minimize the chance of spreading disturbed sediment to unsampled locations.

Sediment sampling will be completed using the methodology discussed in Section 4.4. The sediment samples will be analyzed for mercury by USEPA Method SW-846 7471A, methyl mercury by USEPA Method 1630, Total Organic Carbon (TOC) by the Lloyd-Khan Method and particle size by ASTM D422-63.

4.3.8.2 Surface Water Sampling

Surface water samples will be collected from the unnamed Tributary, Patroon Creek and the I-90 Pond. One sample will be collected from each water body, at RI sample locations SW-05, SW-08 and SW-10 (locations MR-SW-1, MR-SW-2, and MR-SW-3, as shown on Figure 4 of the QAPP). The following procedure will be used to collect surface water directly from the water bodies in sample containers provided by the project laboratory:

- Don a clean pair of latex gloves.
- Estimate sampling depth by visual observation (for shallow samples) or measure depth using a weighted, flexible measuring tape or a rigid gage.
- Invert the laboratory-supplied sample container (without preservatives), insert the sample container into the water to the desired level, and then turn the mouth of the sample container up and towards the upstream direction thus allowing the container to fill.
- Cap sample container while container is still underwater, if possible.
- Remove sample container from water body and cap if not already capped.
- Rinse the exterior of the sample container thoroughly with deionized water and label container.
- Add preservatives and check for appropriate pH.
- Record all appropriate data (including sampling location, sampling depth, time of sampling, and description of sample) in field logbook or the Surface Water Sampling Log.

Surface water samples will be analyzed for mercury by USEPA Method SW-846 7471A, methyl mercury by USEPA Method 1630, alkalinity by USEPA Method 310.2, hardness by USEPA Method 130.2 and Total Dissolved Solids (TDS) by USEPA Method 160.1 and SM 2540C.

4.3.8.3 Fish Tissue Sampling

Fish tissue samples will be collected from the unnamed Tributary, Patroon Creek and from the I-90 Pond. One composite sample will be taken from each of the three water bodies (locations MR-FT-08, MR-FT-09, and MR-FT-10, as shown in Figure 4 of the QAPP). These sample stations are co-located with the sediment and surface water samples discussed above. Prior to sampling, a determination of the final sampling method will be made. This determination will be made based on field conditions. Anticipated methods may include netting, seining, minnow traps, electroshocking, or other method as determined by field staff and approved by the oversight agency.

For fish, timing of sampling is important. Periods of low to moderate stream flow (typically late summer) are best for sampling fish. Sampling at this time also minimizes disturbance to the nests of fish as most young are mobile and are free swimmers. Optimal sampling period will, of course, vary regionally and should be set based on knowledge of the regional biota, precipitation patterns, and other relevant factors.

Prior to sampling, standard water quality measurements will be made at each sampling location. A habitat evaluation sheet, which identifies physical and biological features of each habitat, will also be completed for each location. These data sheets record the field variables which documents habitat features for later comparison of species composition, abundance, and general health. During the fish sampling, for each individual fish, the following parameters will be noted:

- Waterbody/location/depth or position in waterbody
- Species
- Length, in mm, measured from snout to lower part of tail
- Weight, in gram
- Sex and relative age (juveniles/adult)
- General appearance, special attention will be given to physical malformations

Fish collected for laboratory analysis will preserved in the field as directed by the contract laboratory. A field preservative such as formaldehyde or alcohol will be used to preserve samples. Whole bodies of specimen fish will be included in the sample. All other sampling protocols will be coordinated with the contracted laboratory prior to mobilization to the field location. Once collected, fish samples will be shipped to the laboratory overnight. All fish tissue samples will be analyzed for mercury by USEPA Method SW-846 7471A, percent lipid and percent solid.

4.3.9 Survey

Prior to field mobilization, the perimeter, and boring locations will be staked in the field by a licensed New York land surveyor and the horizontal and vertical position (elevation msl and spatial coordinates) recorded as discussed in Section 4.1. Then, following completion of the field activities, the "as built" locations will be re-surveyed for those locations that were adjusted from the staked location. The survey will also include topographic and property boundary lines for the potential remediation areas addressed in the ROD. Survey accuracy will be ±0.01 feet vertically and ±0.1 feet horizontally.

4.3.10 Investigation-Derived Waste Management

Investigation-derived waste (IDW) generated from field activities will be containerized in labeled 55-gallon DOT-approved steel drums and staged at a pre-designated location on the MERECO property for characterization and disposal. Information contained on the label will include the drum contents, name, address and telephone number of generator, date(s) the material was placed in the drum, and a BC contact name/telephone number. Wastes will be separated based on type. For example, separate drums will be filled for contaminated soil and/or sediment, monitoring well development and purge water, decontamination wastewater, used personal protective equipment (PPE), and general trash. If a sufficient quantity of general trash is expected, then a dumpster or rolloff might be staged for this material instead of drums.

For liquid wastes, characterization of the drummed IDW will consist of collecting a composite sample from drums of similar contents and sending the sample to the analytical laboratory to be analyzed for the parameters required by the designated waste receiving facility. Characterization sampling will occur as soon as possible following field activities to ensure compliance with all local, state and federal regulations regarding storage of IDW.

IDW will be disposed in accordance with applicable Federal, State, and Local regulations.

4.3.11 Decontamination Procedures

All down-hole drilling equipment (e.g., augers, rods, etc.) will be decontaminated before beginning drilling activities at the site, and after completion of each boring or monitoring well. Decontamination of the drilling equipment will be conducted over a decontamination pad using a high pressure steam cleaner. Rinsate accumulated in the decontamination pad will be pumped into DOT-approved 55-gallon steel drums pending waste characterization and appropriate off-site disposal.

Sampling equipment decontamination procedures will vary depending on the field task. The various levels of decontamination to be performed between sampling locations for the various types of field activities are described below.

- Level 1 (Geotechnical Sampling Equipment, Split-Spoons, Trowels, etc.)
  - If geotechnical sampling equipment, has come in contact with elemental mercury, preliminary decontamination of the equipment will be conducted over a decontamination pad using a high pressure steam cleaner.
  - Wash/scrub with laboratory detergent/potable water; and
  - Potable water rinse.
- Level 2 (IP, Water Level Meter and Probes)
  - Rinse with laboratory detergent/distilled water solution; and
  - Rinse with distilled water.
- Level 3 (non-dedicated sampling equipment that comes in direct contact with the analytical sample media)
  - Wash/scrub with laboratory detergent/distilled water solution;
  - Distilled water rinse,
  - Laboratory-grade methanol rinse (if organic analyses are planned);
  - Distilled water rinse;
  - Laboratory-grade 10% nitric acid rinse; and
  - Final distilled water rinse.

The waste water generated from the decontamination procedures will be containerized and managed as described in Section 4.3.10.

4.4 Treatability Study of Solidification/Stabilization

The selected remedy includes solidification/stabilization of soils at locations where the concentration of mercury in ground water exceeds 0.7 micrograms per liter (µg/L, or ppb). In order to facilitate the design of the solidification/stabilization mixture, a treatability study will be conducted on soil samples collected from the solidification/stabilization areas. The goal of the study will be to identify the mixture capable of reducing the leachability of mercury from contaminated soils, as determined by the Synthetic Precipitation Leachate Procedure (SPLP). The soil treatability data will be used to prepare cost estimates and design specifications with regard to full-scale treatment, material excavation, transport and storage. The treatability study will be conducted in accordance with *Guidance for Conducting Treatability Studies under CERCLA*, USEPA, November 1992. Details of the study are presented in the Treatability Study Work Plan (Appendix B); a short summary is provided below.

Soil samples will be collected by Brown and Caldwell and shipped to the laboratory. Samples for mixture development will be collected from two locations: one location where the highest groundwater concentrations have been identified, and one location where the concentrations are more representative of an average of the entire Solidification/ Stabilization area. Samples of contaminated soil will be tested for the following parameters:

Analysis	Method
Total Mercury	EAP SW846 7471A
SPLP Mercury	EPA Method 1312
Moisture Content	ASTM D2216
Sieve Analysis	ASTM D422
Organic Content	ASTM D2974
pH	EPA Method 9045C

Following the completion of the testing of the contaminated soil, the design of the soil stabilization/solidification mixture will be conducted in four stages: preliminary evaluation, optimization, repeatability evaluation and the evaluation of construction methods.

The testing of the contaminated soil will provide a benchmark for further analysis. Based on the results, reagents and reagent addition rates that have been effective on similar materials will be identified for the preliminary evaluation. As mentioned in the Green Remediation Plan (Appendix C), the use of combustion by-products in place of traditional Portland cement will be evaluated in the Treatability Study. The samples will be divided into aliquots, blended with selected additives applied at additive-to-soil different ratios, and cured. Prior to curing, specific weights of the mixtures will be determined. The blending and curing process will be conducted according to the procedures outlined in the Treatability Study Work Plan. Following the completion of the curing process, each aliquot will be tested for the following parameters:

Analysis	Method
SPLP Mercury	EPA Method 1312
Unconfined Compressive Strength	ASTM D2216
pH	EPA Method 9045C

Based on results of the preliminary evaluations, additional mixtures will be developed to optimize the design. The additional mixtures will be tested for SPLP Mercury, Unconfined Compressive strength and pH, as outlined previously. Depending on the results, the laboratory may be requested to conduct repeatability evaluations on selected mixtures. Following the completion of the optimization/repeatability testing, one representative mixture will be selected for testing to evaluate the site-specific construction methods (constructability testing).

Additional soil samples will be collected at three locations for the purpose of constructability testing. These samples will not be selected based on mercury concentration, rather they will represent the anticipated typical range of soil types expected at the site. The representative design mixture identified based on the testing of the contaminated soils will be applied to these three soil samples. These combinations will be tested following the previously outlined procedure for Unconfined Compressive Strength and PH, and evaluated with respect to the feasibility of using established construction methods to emplace the mixture at the site. In addition, the representative mixture, as applied to the three critical soil types, will be tested for density to quantify the soil swelling factor (Method ASTM 5057-90). Density tests will be performed prior to, and after the addition of the recommended mixture.

Results of the treatability study will be outlined in the Preliminary Remedial Design Report (PRDR). Summary of findings will be presented in the body of the report, while a detailed description of the study will be provided as an appendix. The structure of the treatability study appendix will be as follows:

1.0 Introduction
2.0 Untreated Waste Receipt
3.0 Untreated Soil Characterization
4.0 Stabilization Treatment
  4.1 Preliminary Evaluations
  4.2 Optimization Evaluations
  4.3 Repeatability Evaluations
  4.4 Evaluation of Construction Methods
5.0 Discussion of Results

Tables
1. Untreated Soil Baseline Characterization
2. Preliminary Soil Stabilization Evaluations
3. Optimizations Soil Stabilization Evaluations
4. Repeatability Evaluations
5. Evaluation of Construction Methods

Attachments
A. Chain of Custody
B. Stabilization Evaluation Data Reports

4.5 Development of Plans and Specifications

This section identifies the project plans, drawings and specifications that will be prepared during the RD. The following project plans are incorporated in this RDWP as Appendices A though D:

- Quality Assurance Project Plan (QAPP) for the RD Investigation (Appendix A);
- Treatability Study Work Plan (TSWP) for treatability testing of solidification/stabilization technologies (Appendix B);
- Green Remediation Plan (GRP) to identify how RD will incorporate "Green" principles (Appendix C); and
- Health and Safety Contingency Plan (HSCP) to address worker and public health and safety (Appendix D).

In addition to these plans, the following plans will be prepared for remedial construction activities and post-remediation activities:

- Air Monitoring Plan (AMP) to address both worker safety and control of emissions from remedial activities (see Section 4.6);
- Sampling Verification Plan (SVP). A SVP will be developed as part of the Remedial Design. For remedial excavations, the sample verification plan will meet the requirements for collection of post-excavation unsaturated soil samples in accordance with the guidance document "Draft DER-10, Technical Guidance for Site Investigation and Remediation," NYSDEC Division of Environmental Remediation, revised

November 2009. Post-solidification/stabilization verification sampling will consist of monitoring dissolved mercury concentrations in groundwater outside of and downgradient from the stabilized mass. The effectiveness of sediment removal will be monitored though annual sampling of fish, surface water and sediments in the Patroon Creek, the Unnamed Tributary and the I-90 Pond and comparison of these data with the available baseline (pre-removal) data. The annual sampling will continue for five years and, if necessary, every five years thereafter.

- Construction Quality Assurance Project Plan (CQAPP) to detail the quality assurance activities that will be performed during construction to verify the objectives and specifications of the remedial design are met (see Section 4.7);
- A Wetland Assessment and Restoration Plan (WARP) for any wetlands impacted or disturbed by the remedial activities;
- Plan for Implementation of Institutional Controls to identify the mechanisms that will be implement to limit Site use and future intrusive activities at the Site to prevent or minimize contact with restricted media and maintain the integrity of engineered controls (see Section 4.8);
- Site Management Plan (SMP) to address long-term operation, maintenance and monitoring at the Site (see Section 4.9); and
- Plan for Sampling of Fish, Surface Water, and Sediment to address annual required monitoring to evaluate impacts on biota in the tributary (see Section 4.10).

Construction drawings and specifications will be prepared during the RD for bid and construction of the final remedy. Drawings will include:

- Plans showing existing Site conditions, building, and utilities, limits of construction and siting (e.g., laydown, stockpile, temporary facilities) areas, extent of soil excavation, extent of sediment excavation, extent of soil solidification/stabilization, and Site restoration/grading;
- Detail drawings showing depths of excavation, location and type of environmental controls (e.g., tracking pads, silt curtains, and silt fence), temporary fencing requirements, stockpile requirements, traffic routing, soil erosion and sediment control measures, green measures, and restoration/grading requirements.

Specifications will be prepared in accordance with the Construction Specifications Institute's *Manual of Practice*, 1985. The specifications will address all aspects of the construction of the remedial action.

4.6 Development of Air Monitoring Plan

The AMP will detail the requirements for air monitoring during construction of the remedial action. Monitoring will be performed to:

- Verify emissions resulting from remedial construction activities meet applicable or relevant and appropriate air emission requirements;
- Measure emissions and implement contingency measures depending on action levels specified in the AMP (e.g., use foam for odors);
- Measure emissions and implement upgrades in personal protective equipment depending on action levels specified in the AMP and HSCP; and
- Protect workers on the Site and surrounding community.

The AMP will be part of the design process, and will be submitted with the PRDR. As requested by USEPA, the AMP may conform to the New York State Department of Health Community Air Monitoring Plan guidance found in NYSDEC's Draft DER-10 Technical Guidance for Site Investigation and Remediation (NYSDEC, 2002).

4.7 Development of Construction Quality Assurance Project Plan

The CQAPP will describe the site-specific components of the quality assurance program related to the construction of the remedial action to ensure the construction meets or exceeds design criteria and specifications. It will contain the following elements:

- Responsibilities and authorities of all organizations and key personnel involved in the design and construction of the remedial action;
- Qualifications of the Quality Assurance Official (QAO) to demonstrate the designee possesses the requisite training and experience to fulfill the QAO's identified responsibilities;
- Qualifications of the independent of the remedial action contractor to conduct the quality assurance program;
- Protocols for sampling and testing used to monitor construction quality;
- Identification of proposed quality assurance sampling activities, including the sample size, locations of sampling/testing, frequency of testing, acceptance and rejection data sheets, problem identification and corrective measures reports, evaluation reports, acceptance reports, and final documentation requirements and protocols; and
- Post-construction drawings.

The CQAPP will be submitted with the Final Remedial Design Report.

4.8 Development of Plan for Institutional Controls

The plan for institutional controls will describe the administrative measures that will be implemented to restrict Site use, limit future Site activities, and certify the measures remain in place. These measures will include:

- Preparation of environmental easement/restrictive covenant or similar measure to be filed in the property records of Albany County to restrict the use of the Site to industrial uses only, limit future excavation activities or soil disturbance to preserve the integrity of an existing clay clap on the southern portion of the Site and the solidified soil mass, restrict excavation of soils below the Phase I and Container Storage buildings, and restrict the use of groundwater.
- Preparation of a SMP (see Section 4.9), which would include administrative controls regarding future Site excavation or building modification or demolition activities.
- Periodic certification statements from the Site owner/operator of the Site properties or other parties implementing the remedy that the institutional and engineering controls are in place.

The plan will be submitted with the PRDR.

4.9 Development of Site Management Plan

The SMP will describe long-term operation, maintenance, and monitoring of the Site as well as management and procedures regarding potential future Site activities. The SMP will contain the following elements:

- Description of institutional controls and associated restrictions;
- Management and procedures for operation and maintenance (O&M) of the clay cap and solidified/stabilized soil mass;
- Monitoring of groundwater to verify groundwater has been remediated;
- Management and procedures for future soil excavation activities that occur in areas including but not limited to beneath the Phase I and Container Storage Buildings of the Mercury Refining Property, and soils on the Albany Pallet Property, the Allied Building Property, and the Diamond W Property to ensure proper characterization, handling, and disposal of the soil and protection of workers and the community;
- Management and procedures for future building demolition or alteration activities to ensure proper characterization, handling, and disposal of the debris and protection of workers and the community;
- Requirement and procedures for evaluation of the potential for vapor intrusion at all existing buildings on the Site and any future buildings that are constructed, and prescribed mitigation measures if required;
- Requirement for periodic certifications by the owner/operator of the Site properties or other parties implementing the remedy that the institutional and engineering controls are in place.

The O&M Plan will include all aspects of the SMP and will be submitted with Final Remedial Design Report.

4.10 Development of Plans for Sampling Fish, Surface Water and Sediment

As indicated in Section 4.3, the ROD requires that sampling of media in the creeks and I-90 Pond be performed annually for at least five years, and possibly thereafter. The Plans for this sampling program will include proposed locations, sampling techniques, and analytical methods. The program will rely on the historical data, as well as the results of the baseline program to be performed as part of the RDI.

4.11 Preparation of Remedial Design Reports

This section describes reports that will be prepared during the RD (i.e., RD Reports).

4.11.1 Pre-Remedial Design Delineation Report

The Pre-Remedial Design Delineation Report will present and summarize the results of the RDI. Drawings will be included that show analytical results and delineate the extent of mercury contamination that exceeds soil, sediment and groundwater cleanup criteria. In addition, the report will include volume calculations of the media that exceed the cleanup criteria. The anticipated outline for the Pre-Remedial Design Delineation Report is provided below.

1.0 Introduction
2.0 Site History and Description
3.0 Remedial Action Objectives
4.0 Historical Remedial Investigation Results

5.0 Remedial Design Investigation Results
6.0 Estimated Volume of Material to be Remediated
Tables Analytical Results for Mercury in Soil, Sediment, and Groundwater
Volume Calculations of Surficial Soil, Sediment, and Source Soils Exceeding Cleanup Criteria
Figures Site Location
Sampling Locations in Soil, Sediment and Groundwater
Analytical Results and Delineation of Material Exceeding Cleanup Criteria

4.11.2 Preliminary Remedial Design Report

The PRDR will present the RD criteria and objectives and include discussion on the ability to successfully meet the objectives. The report will also include the treatability test results and preliminary drawings and specifications (assuming the 50 percent stage of the design). The report will also discuss how the drawings and specifications will meet the ROD. The proposed outline for the PRDR is provided below.

1.0 Introduction
2.0 Site History and Description
3.0 Remedial Action Objectives
4.0 Remedial Design Investigation Results
5.0 Remedial Design Criteria
6.0 Remedial Design Activities
7.0 Remedial Design Analysis (including Treatability Study Results)
8.0 Remedial Action Analysis
9.0 Draft Remedial Action Schedule
Table of Contents for Drawings and Specifications
Preliminary drawings showing general arrangement of all work proposed

Engineering plans representing an identification of existing Site conditions, and an illustration of the work proposed, will be prepared. These plans will include, at a minimum, the following:

- Title sheet including the title of the project, key map, preparer's name, date prepared, sheet index, and NYSDEC Project identification;
- Property data including owners of record for properties adjacent to the Site, as appropriate;
- The Site survey including the distance and bearing of property lines that identify and define the project;
- Site and proposed contours and spot elevations for areas that would be affected by the remedial actions;
- Identified easements, rights-of-way and reservations, as appropriate;
- Buildings, structures, wells, facilities, equipment, if any;
- Known utilities, existing and proposed;
- Location and identification of significant natural features;
- Flood hazard data and delineation presented in the Federal Emergency Management Agency (FEMA) flood insurance study for the area;
- North arrow, scale, sheet numbers, etc.;
- Potential decontamination areas, staging areas, stockpiling areas and borrow areas, as appropriate;
- Soil cover installation plan including areas to be vegetated or paved;
- Erosion controls to address surface water runoff and turbidity controls for work in the tributary;

- Soil, structure, sediment removal, backfill and restoration plans;
- Miscellaneous detail sheets;
- Definitions of all symbols and abbreviations.

Preliminary specifications including photographic documentation of remedial construction.

Appendices
Calculations
Green Remediation Provisions
Plan for Institutional Controls
Air Monitoring Plan
Treatability Study Report
Soil Verification Plan (SVP)

4.11.3 Draft Final Remedial Design Report

A Draft Final Remedial Design (90-95% design stage) will be submitted to the EPA for review and comment. In addition to the items identified for the PRDR, the Draft Final Design Report will also include:

- Final plans and specifications including incorporation of comments received from USEPA on the preliminary (50 percent) design;
- The SMP as described in Section 4.9;
- The CQAPP for sampling, analysis, testing, and monitoring to be performed during the remedial construction;
- A report describing the efforts to obtain approvals, secure access, and implement institutional controls;
- A plan for implementation of construction and construction observation including the method of selecting the construction contractor(s);
- A final engineer's cost estimate of the RA; and
- Final schedule for implementation of the RA.

The Draft Final Remedial Design (90-95% design stage) will be revised to address EPA's comments and the Final Remedial Design will be submitted to the EPA.

5. ACCESS AND OTHER APPROVALS

This section identifies approvals required to comply with the RD AOC, with the exception of those approvals needed from the EPA. A description of how approvals will be sought and a schedule for obtaining necessary approvals is provided. Per the SOW, approvals include property owner consent, waste disposal facility approvals, and others as necessary. Based on current information, it is not believed that the tributary to Patroon Creek contains wetlands in the area of the proposed remedial action. However, the final extent of sediment removal is unknown. As part of the baseline fish, surface and a sediment sampling, a reconnaissance of the tributary in the area of the remedy will be performed to determine whether formal wetland delineation is required. If wetlands are likely to be disturbed or impacted by remedial activities, a wetlands assessment and restoration plan will be required. Whenever possible, Management Practices (according to Federal Register vol. 51, No. 219, Part 330.6) will be followed to minimize unavoidable impacts to wetlands to the maximum extent practicable while designing/implementing the remedy.

5.1 Access Approvals

Approval will be sought from each adjacent property owner to conduct remedial design investigation activities, such as sampling of soils and installation of monitoring wells, on the adjacent properties. A Grant of Access document will be sent to each property owner for review and signature. The Grant of Access document will request permission to access the property and describe the work to be performed, protocols for access and activities, and limitations of liability. The document will contain two attachments – a legal description of the property for which access is sought and a description of the remedial investigation work being performed. Note that access to the south (CSX railroad) is anticipated to require additional negotiation and documentation.

5.2 Waste Disposal Approvals

Approval will be sought from disposal facilities to accept the wastes generated from RDI and RA activities. Anticipated wastes include:

- Investigation-derived wastes from RDI activities, such as soil cuttings or groundwater from development of monitoring wells;
- Excavated soils and sediment from the RA; and
- Groundwater from dewatering during excavation of soil and/or sediment.

Prospective facilities will be contacted to determine their waste acceptance criteria and the types of waste they can accept. Waste profile characterization forms supplied by each prospective disposal facility will be completed using estimated data and submitted for their review. A letter of approval will be sought from each facility that can accept the waste based on the provided information. The letter of approval will contain the facility's name, classification, and the referenced waste. The completed waste profile form will be included as an attachment to the approval letter.

5.3 Permits

Federal, State, and local permits are likely required for implementation of the RA. Exact permit requirements will be determined during the RD task. This section describes the permits that may be required and the associated criteria for inclusion herein.

The following Federal permits are likely applicable to the RA:

- United States Army Corps of Engineers, Nationwide Permit 38 for remedial activities in the Unnamed Tributary (only if wetlands are present in the area of the remedial action).
- EPA Hazardous Waste Generator ID number.

The following State permit programs are likely applicable to the RA:

- Protection of Waters Permit for Disturbance of the Bed or Banks of a Protected Stream or Other Watercourse for remedial activities in the Unnamed Tributary;
- State Pollution Discharge Elimination System (SPDES) General Permit for Stormwater Discharges from Construction Activity (GP-0-08-001) if the area disturbed during remedial activities is one acre or more;
- SPDES Individual Permit if there will be discharge of water generated during remedial activities to either groundwater or surface water;
- Waste Transporter Permit for the transport of wastes generated from remedial activities; and
- Wetlands (Freshwater) Permit if there will be disturbance of a wetland 12.4 acres or larger due to remedial activities.

Local Permits that may be required include:

- Town of Colonie Grading Permit for excavation and restoration activities;
- Town of Colonie Flood Plan Permit for remedial activities in the Unnamed Tributary;
- Town of Colonie Watercourse Area Permit and/or Variance for remedial activities in the Unnamed Tributary; and
- Town of Colonie Department of Public Works, Division of Pure Waters Sewer Discharge Permit if there will be a discharge of water generated during remedial activities to sanitary sewer.

In addition to these permit programs, compliance with the requirements of other regulations would be necessary. These include:

- Air monitoring;
- Erosion controls;
- Proper waste packaging, labeling transportation and disposal; and
- Waste characterization.

6. HEALTH AND SAFETY CONTINGENCY PLAN

Per the SOW, this RDWP includes a health and safety contingency plan (HSCP) to address worker safety; the protection of public health and safety; the response to contingencies that could impact public health, safety, and the environment; and emergency procedures. The HSCP is provided in Appendix D and describes the general health and safety procedures and an approach for involving the community in contingency planning.

7. SCHEDULE

A draft schedule for the Remedial Design process appears as Figure 7-1. The portion of the schedule through the submittal of the Final Remedial Design Report submittal adheres to the time frames specified in the SOW. The schedules for subsequent activities that include the actual remedial implementation contain a greater extent of uncertainty. These steps are shown to provide an overview of the entire remedial process.

8. REFERENCES

CDM Federal Programs Corporation, 2008. *Final Feasibility Study Report. Mercury Refining Site Remedial Investigation/Feasibility Study, Colonie, New York.* USEPA RAC II Contract No.: 68-W-98-210Work Assignment No.: 140-RICO-0276.

NYSDEC, 2002. *Draft DER-10 Technical Guidance for Site Investigation and Remediation.* Division of Environmental Remediation. December 25, 2002.

USEPA 2008. *Record of Decision, Mercury Refining Site, Towns of Colonie and Guilderland, Albany County, New York. Region II, New York, New York.* September 2008.

USEPA, 1986. *Superfund Remedial Design and Remedial Action (RD/RA) Guidance* (OSWER Directive No. 9355.0-4A).

USEPA, 1992. *Guidance for Conducting Treatability Studies under CERCLA.* November 1992.

USEPA, Department of Defense, Department of Energy, 2005. *Workbook for Uniform Federal Policy for Quality Assurance Project Plans.*

USEPA Region 2, 2009. *USEPA Region 2 "Clean & Green" Policy* http://www.epa.gov/region02/superfund/green_remediation/policy.html

USEPA, 1992. *Guidance for Conducting Treatability Studies under CERCLA.* November 1992.

FIGURES

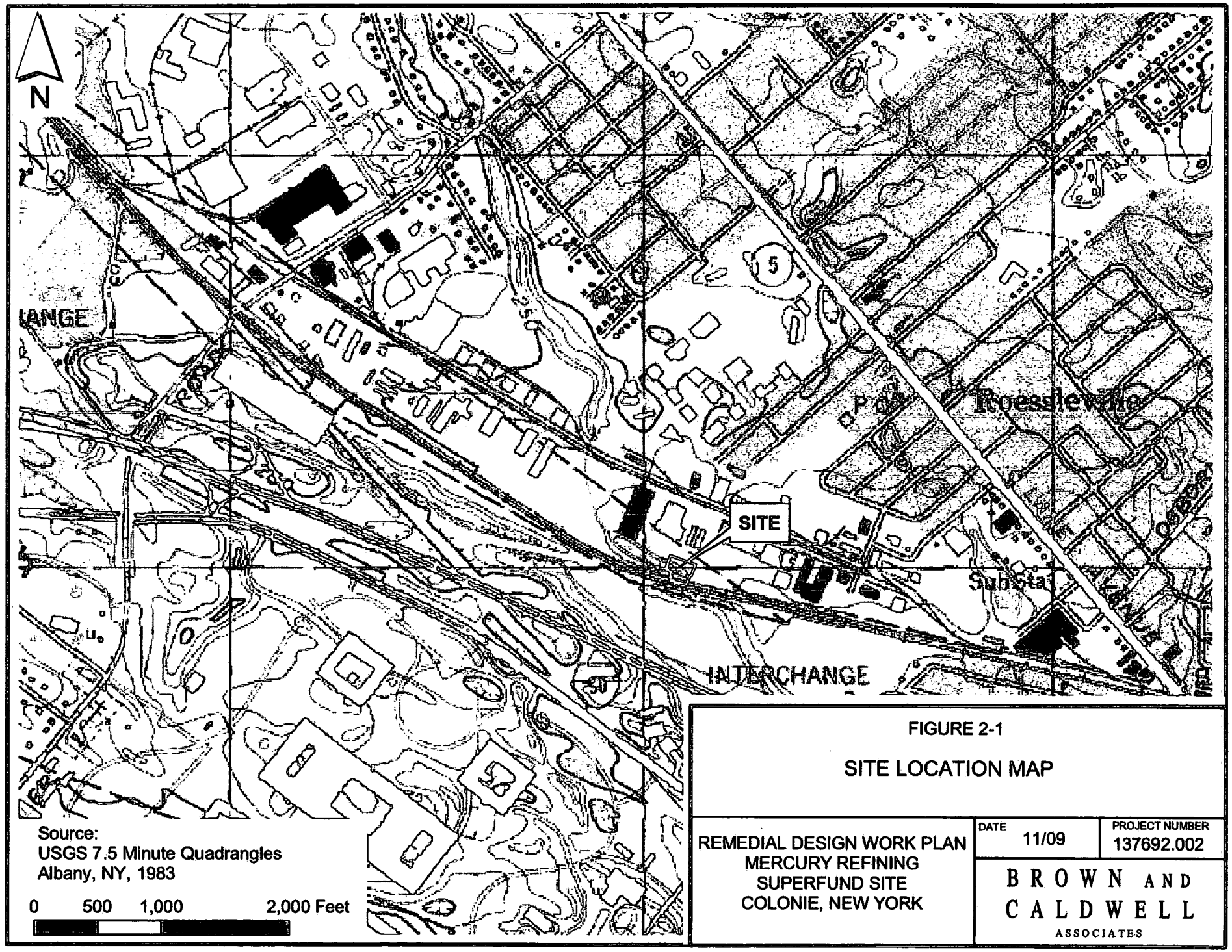

FIGURE 2-1

SITE LOCATION MAP

REMEDIAL DESIGN WORK PLAN
MERCURY REFINING
SUPERFUND SITE
COLONIE, NEW YORK

DATE	PROJECT NUMBER
11/09	137692.002

BROWN AND CALDWELL ASSOCIATES

P:\GIS\Mercury_Refining_Superfund\Site_Location.mxd

Figure 3-1: Organization Chart

Site Coordinator
Frank Williams, P.G.

Mercury Refining Site Remedial Design Group

Supervising Contractor

Quality Assurance
Greg Cole

Project Manager
Tamara Sorell, Ph.D.

Principal in Charge
Jeffrey Caputi, P.E.

Key Project/Task Managers

Engineering/Treatability Study
Marek Ostrowski, P.E.
Pre-Design Investigation
Frank Williams, P.G.

Technical Specialists

Remedial Design
Jonathan Howland, Ph.D., P.E.
Marek Ostrowski, P.E.
Adam Sherman, P.E

Geology/Hydrogeology
James Marolda, P.G.

Biological
David Tompkins

Quality Assurance
Teresa Caputi

Health and Safety Contingency Plan
Lydia Crabtree, CSP
Benjamin Leff
Nicole Lordan

Vapor Intrusion/ Air Monitoring
Tamara Sorell, Ph.D.
Paul Thorn

Green Remediation/ Sustainability
Karina Tipton, P.E., LEED

Permitting
Patricia Petrino, P.E.

ID	Task Name	Start	Finish
1	Execution of Settlement Agreement	Wed 9/30/09	Wed 9/30/09
2	EPA Approval to Proceed with Remedial Design	Thu 10/15/09	Thu 10/15/09
3			
4	**Access Negotiations**	**Wed 9/30/09**	**Thu 1/28/10**
5	Negotiate with Landowners	Wed 9/30/09	Thu 1/28/10
6	Notify EPA of Anticipated Access Issues	Mon 11/16/09	Mon 11/16/09
7			
8	**Remedial Design Work Plan (RDWP)**	**Wed 9/30/09**	**Mon 6/7/10**
9	Prepare RDWP Documents	Wed 9/30/09	Thu 12/3/09
10	Submit Draft RDWP to EPA	Mon 12/14/09	Mon 12/14/09
11	EPA Review	Thu 12/24/09	Fri 2/5/10
12	Revisions/ Additional Review and Discussion	Mon 2/15/10	Fri 5/28/10
13	RDWP Approval	Mon 6/7/10	Mon 6/7/10
14			
15	**Remedial Design Investigation (RDI)**	**Mon 6/7/10**	**Fri 1/14/11**
16	RDI Contracting / Planning	Mon 6/7/10	Thu 7/8/10
17	RDI Field Work	Thu 7/8/10	Thu 8/26/10
18	Prepare RDI Documents	Thu 8/26/10	Thu 11/11/10
19	Submit Draft RDI Report	Thu 11/11/10	Thu 11/11/10
20	EPA Review of Draft RDI Report	Thu 11/11/10	Tue 12/14/10
21	Revisions/ Additional Review	Tue 12/14/10	Fri 1/14/11
22	RDI Report Approval	Fri 1/14/11	Fri 1/14/11
23			
24	**Treatability Study**	**Thu 8/26/10**	**Fri 12/24/10**
25	Perform Treatability Laboratory Studies	Thu 8/26/10	Wed 11/24/10
26	Prepare Treatability Study Report	Wed 11/24/10	Fri 12/24/10
27	Submit Treatability Study Report	Fri 12/24/10	Fri 12/24/10
28			
29	**Remedial Design**	**Fri 1/14/11**	**Fri 12/2/11**
30	Prepare RD Documents	Fri 1/14/11	Mon 6/13/11
31	Preliminary Draft RD Submittal	Mon 6/13/11	Mon 6/13/11
32	EPA Review	Mon 6/13/11	Mon 7/18/11
33	Final Draft RD Submittal	Mon 7/18/11	Mon 7/18/11
34	EPA Review	Mon 7/18/11	Tue 9/6/11
35	Revisions/ Additional Review and Discussion	Mon 10/3/11	Mon 10/31/11
36	Final RD Submittal	Mon 10/31/11	Mon 10/31/11
37	RD Approval	Fri 12/2/11	Fri 12/2/11
38			
39	**Remedial Implementation**	**Fri 1/14/11**	**Tue 2/25/14**
40	Implementation Negotiations	Fri 1/14/11	Mon 5/23/11
41	Implementation Approval	Wed 1/4/12	Wed 1/4/12
42	Development of Bid Packages	Wed 1/4/12	Tue 4/3/12
43	Bidding Process	Tue 4/3/12	Tue 7/3/12
44	Permitting/Construction Planning	Tue 7/3/12	Fri 12/28/12
45	Remedial Construction	Fri 12/28/12	Thu 12/26/13
46	Apply Institutional Controls	Thu 12/26/13	Tue 2/25/14
47	Prepare Remedial Construction Completion Report	Thu 12/26/13	Tue 2/25/14
48	Submit Remedial Construction Completion Report	Tue 2/25/14	Tue 2/25/14

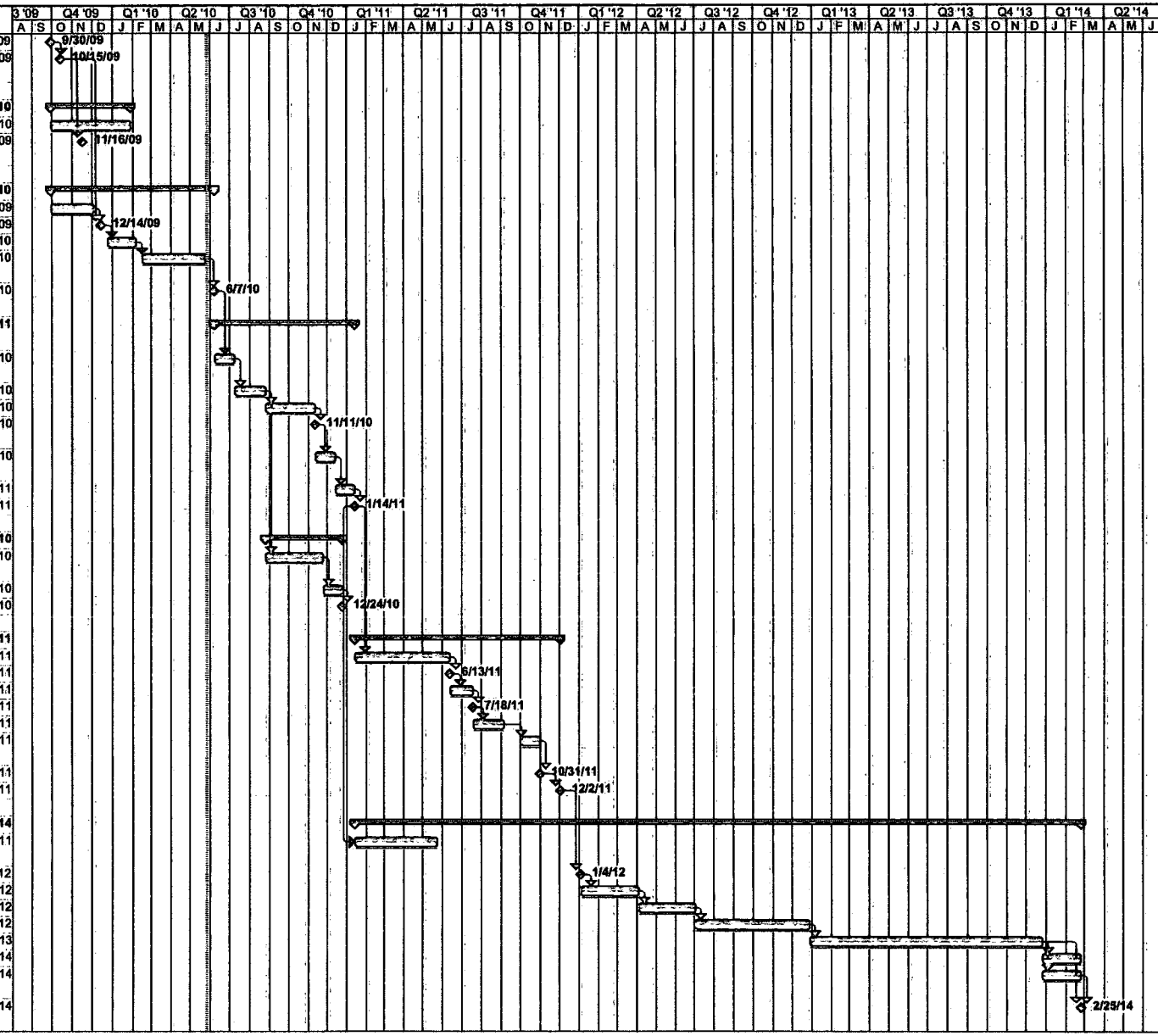

Figure 7-1
Remedial Design Schedule

Task | Split | Progress | Milestone | Summary | Project Summary | External Tasks | External Milestone | Deadline

P:\Mercury_Refining_Superfund_Site\RDWP\Revisions_May_2010\Figures\RDWP_Draft_Schedule_Revised_May_2010.mpp

APPENDIX A

Quality Assurance Project Plan (QAPP)

QUALITY ASSURANCE PROJECT PLAN FOR THE REMEDIAL DESIGN/REMEDIAL ACTION MERCURY REFINING SUPERFUND SITE COLONIE, NEW YORK

Prepared for

Mercury Refining Company Remedial Design Group

June 2010

Project Number: 137692.002.001

BROWN AND CALDWELL

Associates

110 Commerce Drive

Allendale, New Jersey 07401

TABLE OF CONTENTS

ATTACHMENTS IV

LIST OF FIGURES V

1. INTRODUCTION 1-1
   1.1 Site Background 1-2
   1.2 Previous Investigations 1-3

2. PROJECT ORGANIZATION AND PERSONNEL RESPONSIBILITIES 2-1
   2.1 Primary Contractors 2-1
   2.2 Other Contractors 2-1

3. QUALITY ASSURANCE OBJECTIVES 3-1
   3.1 Data Quality Objectives (DQOs) 3-1
   3.2 Project Quality Objectives (PQOs) 3-1
      3.2.1 Who Will Use the Data? 3-1
      3.2.2 What Will the Data Be Used For? 3-2
      3.2.3 What Type of Data are Required? 3-2
      3.2.4 How "Good" do the Data Need to Be? 3-2
      3.2.5 How Much Data are Needed? 3-3
      3.2.6 How Will the Data be Collected? 3-3
      3.2.7 Who Will Generate the Data? 3-3
      3.2.8 How Will the Data be Reported? 3-3
      3.2.9 How Will the Data be Archived? 3-4
   3.3 Comparison Criteria 3-4
   3.4 Analytical Data Quality Categories 3-4
   3.5 QA/QC Characteristics 3-5
      3.5.1 Precision 3-5
      3.5.2 Accuracy 3-6
      3.5.3 Representativeness 3-7
      3.5.4 Completeness 3-7
      3.5.5 Sensitivity 3-7
   3.6 Impact of Failure to Meet Data Quality Objectives 3-7
   3.7 Data Usability and Reconciliation with User Requirements 3-8

4. INVESTIGATION ACTIVITIES AND SAMPLING PROCEDURES 4-1
   4.1 Pre-Design Investigation Soil Removal 4-1
   4.2 Sewer Investigation 4-3
   4.3 Sediment Delineation Sampling 4-4
   4.4 Geotechnical Investigation 4-5

4.5 In-Situ Stabilization/Solidification (ISS) Investigation 4-5
4.5.1 Direct-Push ISS Investigation 4-6
4.5.2 Hollow-Stem Auger ISS Investigation 4-7
4.5.3 Low-Flow Groundwater Sampling 4-8
4.6 Soil Vapor Investigation 4-10
4.6.1 Installation of Soil Vapor Probes 4-11
4.6.2 Collection of Soil Vapor Samples 4-11
4.7 Ecological Monitoring Baseline Investigation 4-12
4.7.1 Downstream Sediment Sampling 4-12
4.7.2 Surface Water Sampling 4-12
4.7.3 Fish Tissue Sampling 4-13
4.8 Survey 4-14
4.9 Investigation-Derived Waste Management 4-14
4.10 Decontamination Procedures 4-14

5. SAMPLE CUSTODY AND DOCUMENTATION 5-1
5.1 Sample Identification System 5-1
5.2 Sample Custody, Packaging, and Shipping 5-2
5.2.1 Field Custody 5-2
5.2.2 Sample Containers and Preservatives 5-3
5.2.3 Sample Shipping Procedures 5-3
5.2.4 Laboratory Custody Procedures 5-4
5.3 Sample Documentation 5-4
5.3.1 Field Logbooks 5-4
5.3.2 Field Investigation Forms 5-5
5.3.3 On-Site Screening Analysis Records 5-6

6. LABORATORY REQUIREMENTS AND PROCUREMENT OF LABORATORY SERVICES 6-1
6.1 Analytical Laboratory Services 6-1
6.2 Geotechnical Laboratory Services 6-1

7. ANALYTICAL AND GEOTECHNICAL DATA HANDLING, REVIEW, AND REPORT 7-1
7.1 Data Reduction 7-1
7.1.1 Field Data Reduction 7-1
7.1.2 Analytical Laboratory Data Reduction 7-1
7.1.3 Geotechnical Laboratory Data Reduction 7-2
7.1.4 Project Database 7-2
7.1.5 Project Data Reduction 7-2
7.2 Data Review 7-2
7.2.1 Methodology 7-2
7.2.2 Data Verification Summary for Analytical Sample Results 7-3
7.2.3 Reconciliation with Data Quality Objectives 7-4

7.3 Data Reporting 7-4
7.3.1 Contents of Laboratory Data Reports 7-4
7.3.2 Data Presentation in the Remedial Design Report 7-4

8. QUALITY ASSURANCE/QUALITY CONTROL SAMPLE REQUIREMENTS 8-1
8.1 Field Quality Control Samples 8-1
8.1.1 Field Environmental Duplicate Samples 8-1
8.1.2 Field Blanks 8-1
8.1.3 Cooler Temperature Blanks 8-1
8.2 Laboratory Quality Control Samples 8-2
8.2.1 Method Blanks 8-2
8.2.2 Matrix Spike/Matrix Spike Duplicates 8-2
8.2.3 Laboratory Control Samples 8-2
8.2.4 Laboratory Duplicate Samples 8-2
8.2.5 Interference Check Samples 8-3

9. INSTRUMENT CALIBRATION AND PREVENTIVE MAINTENANCE 9-1
9.1 Instrument Calibration 9-1
9.1.1 Field Instrumentation 9-1
9.1.2 Analytical Laboratory Instrumentation 9-1
9.2 Preventive Maintenance 9-2
9.2.1 Field Instrumentation 9-2
9.2.2 Laboratory Instrumentation 9-2

10. SUPPLIES AND CONSUMABLES 10-1

11. PROJECT ASSESSMENTS 11-1
11.1 Project Readiness Audit 11-1
11.2 Surveillances 11-1

12. TRAINING OF PROJECT STAFF 12-1
12.1 General Personnel Training 12-1
12.2 Quality Assurance Training 12-1
12.3 Technical Training 12-1

13. CORRECTIVE ACTION 13-1

14. QUALITY ASSURANCE REPORTS TO MANAGEMENT 14-1

15. REFERENCES 15-1

ATTACHMENTS

Attachment A UFP – QAPP Worksheets
A-1 Résumés
A-2 Sampling SOPs
A-3 Field Forms
Attachment B Analytical Laboratory QA Manuals and SOPS (CD-ROM)
Attachment C Geotechnical Laboratory QA/QC Manual and ASTM Standards

LIST OF FIGURES

Figure 1 Site Location Map
Figure 2 Proposed Sample Locations
Figure 3 Proposed Sediment Sample Locations
Figure 4 Proposed Ecological Sample Locations
Figure 5 Sample Chain-of-Custody Form

1. INTRODUCTION

This document presents the Quality Assurance Project Plan (QAPP) for data collection activities associated with remedial design (RD) at the Mercury Refining Superfund Site (the Site). This QAPP also anticipates activities that may be needed during the remedial action (RA) to limit the need for future updates to the QAPP. This QAPP has been prepared on behalf of the Mercury Refining Company Remedial Design Group (the Group). This work associated with the RD/RA is being performed in accordance with the Remedial Design Administrative Order on Consent (RD AOC) dated September 30, 2009; the "Statement of Remedial Design Work, Mercury Refining Superfund Site, Towns of Colonie and Guilderland, Albany County, New York" (SOW),dated September 30, 2009; and the Record of Decision (ROD), dated September 2008.

The purpose of the data collection associated with this QAPP is to complete all required investigation activities at the Site in support of the RD/RA, although update of the QAPP may be required at various stages of the RD/RA to allow for the addition of field activities that have not been anticipated at this time. Data collection activities include collecting physical and geotechnical data from soil, soil vapor, stream sediment and groundwater to:

1. Evaluate the vertical and lateral extent of unsaturated soils and sewer bedding/sediments with mercury concentrations in excess of 5.7 mg/kg;
2. Evaluate the vertical and lateral extent of saturated soils containing dissolved mercury in excess of 0.7 μg/L;
3. Perform a bench-top treatability study of in-situ solidification/stabilization (ISS);
4. Define the vertical and lateral extent of sediments in the unnamed tributary with mercury concentrations in excess of 1.3 mg/kg;
5. Confirm that manganese, arsenic and thallium detected in monitoring well OW-3 are not site-related; and
6. Determine hazardous/non-hazardous waste disposal requirements for on-site soils.

The RD will provide a permanent solution that prevents or minimizes potential future human exposure to mercury-contaminated soil, prevents or minimizes potential ingestion of mercury-contaminated groundwater and remediates mercury-contaminated sediments in the unnamed tributary to the Patroon Creek. This QAPP is prepared as an appended document to the Remedial Design Work Plan (RDWP) (Brown and Caldwell Associates, 2009), as are the Treatability Study Work Plan (TSWP), Green Remediation Plan (GRP) and Health and Safety Contingency Plan (HSCP).

This QAPP has been prepared to define the quality assurance (QA) and quality control (QC) activities to be implemented, the integrity of the work to be performed at the Site, and the type and quality of data collected relative to its intended use. This Plan has been prepared in accordance with The Uniform Federal Policy for Implementing Quality Systems (UFP-QS) [EPA-505-F-03-001] (IDQTF, 2005a), and the Uniform Federal Policy for Quality Assurance Project Plans (UFP-QAPP), [EPA-505-B-04900A through C] (IDQTF, 2005b). Accordingly, the completed 37 QAPP Worksheets contained in the "Workbook for Uniform Federal Policy for Quality Assurance Project Plans" are included in Attachment A. This relatively new U.S. Environmental Protection Agency (USEPA) QAPP guidance (finalized in 2005) has been designed to streamline the USEPA's review of the QAPPs by placing the majority of the required components onto standard Worksheets. Where appropriate, quality assurance information is provided in the Worksheets. In some cases, the Worksheets reference narrative information found in the text of the QAPP.

The specific subjects addressed by the QAPP include the following:

- Description of Project
- Organization and Responsibilities of Project Personnel
- Project Objectives, including QA Objectives for Data
- Field Sampling Program and Procedures
- Sample Custody, Packaging and Shipping
- Sample Documentation
- Sample Analytical Program
- Data Reduction, Verification, Assessment, and Reporting
- QA/QC Requirements and Procedures
- Calibration and Maintenance of Instrumentation
- Requirements for Supplies and Consumables
- Assessment of Project Procedures
- Training of Project Staff
- Corrective Action
- QA Reports to Management

The scope of field work and data collection anticipated for the remedial design and interim action activities, as described in the RDWP, focuses on geotechnical testing and delineation of mercury-containing soil, sediment and groundwater at the Site. However, this QAPP also addresses the various analytical testing that could potentially be needed during the RD/RA.

Worksheets, which further document the required elements of this QAPP, are referenced as appropriate in the text sections, and are provided in Attachment A. Worksheets No. 1 and No. 3 contain the approval and distribution list for this QAPP, respectively. Identifying information in regard to this document, including a cross-reference guide between text sections and Worksheets for specific QAPP elements/information, is provided in Worksheet No. 2 (Attachment A).

1.1 Site Background

The Site includes the Mercury Refining Company, Inc. (MERECO) Property, which is located at 26 Railroad Avenue on the border of the Towns of Guilderland and Colonie, Albany County, New York (MERECO Property). This approximately 0.68-acre lot was used as a mercury reclamation facility. Figure 1 shows the MERECO Property location.

MERECO was founded in 1955. The facility used retorts (specialized ovens to distill and recover mercury) to reclaim mercury from mercury batteries and other mercury-bearing materials, such as thermometers, fluorescent bulbs, spill debris, and dental amalgams. The recovered mercury was then refined and marketed. The retorts were contained in the old Retort Building which was located just north of the Container Storage Building. MERECO also collected and brokered silver powders and small quantities of other precious metals. The precious metals operations continue today.

The areas to the immediate north, east, and west of the MERECO Property are principally light industrial with some commercial use and warehousing. The former Albany Pallet and Box Company (Albany Pallet) lies to the north of the Property, Allied Building Products Corporation (Allied Building) is located east of the Property and Diamond W Products Incorporated (Diamond W) is located west of the MERECO Property. A CSX Railroad right-of-way is located south of the Property. The closest residence is located approximately one quarter mile north of the Site.

The Site is defined by the extent of contamination associated with MERECO's past reclamation processes and includes the MERECO Property, the western portion of the Allied Building Property, the southern portion of Diamond W, the southern portion of the Albany Pallet Property, and a portion of an unnamed tributary to Patroon Creek (the Unnamed Tributary), which is located in the CSX right-of-way immediately south of the MERECO Property.

The Unnamed Tributary received contaminated stormwater drainage from the storm sewer system that formerly serviced the MERECO Property. The catch basins of the MERECO storm sewer have been plugged and present-day discharge is therefore expected to be minimal. The Unnamed Tributary currently receives drainage from a municipal storm sewer that extends south from Railroad Avenue through the Allied Building property, then west through the MERECO property to an outfall adjacent to the former outfall of the MERECO storm sewer. Approximately 1,600 feet downstream of the MERECO Property, the tributary converges with Patroon Creek. Approximately one mile downstream of the MERECO Property there is a dam in the Creek which forms the I-90 Pond. The Creek flows over the dam's spillway and enters the Hudson River approximately 5 miles from the stormwater outfall. The dam is owned and maintained by the City of Albany, New York.

The northeastern portion of the MERECO Property is currently covered by a concrete and asphalt cap which is a single-layer cap. The cap was installed to reduce the infiltration of rain water and to prevent direct contact with underlying soils which are contaminated with mercury. The southern portion of the MERECO Property is covered by a single-layer clay cap which was installed after the excavation and off-site disposal of mercury and polychlorinated biphenyl (PCB)-contaminated soils in 1985. The Property currently includes two buildings and is partially surrounded by a chain-link fence. One of the buildings, called the Phase 1 Building, houses the past and current operation of MERECO. The other building, called the Container Storage Building, has been used to store incoming material for processing in the Phase 1 Building. A commercial asphalt roadway and a wide business driveway provide access to the MERECO Property.

1.2 Previous Investigations

Before 1980, waste contaminated with mercury was dumped over an embankment of the Unnamed Tributary. From 1980 to 1998, waste batteries and other mercury-containing materials were stored in drums on wooden pallets within paved areas of the MERECO Property prior to disposal. The results of initial sampling performed by the New York State Department of Environmental Conservation's (NYSDEC's) Division of Fish and Wildlife in 1981 and 1982 indicated the presence of PCBs and mercury contamination in soils on the southern edge of the MERECO Property and on the embankment to the Unnamed Tributary. Results of further sampling confirmed the presence of these contaminants in soils at the MERECO Property, and mercury contamination in Creek sediments. In 1983, the Site was placed on the federal National Priorities List (NPL). At that time, the NYSDEC assumed the role of lead agency for directing and overseeing Site investigation and cleanup.

Between 1985 and 1999, NYSDEC worked with MERECO to identify and remediate mercury-contaminated areas both on and off of the MERECO Property, and to evaluate and abate migration of mercury and other contaminants from the facility, which included investigation of Patroon Creek. A more detailed description

of these investigations can be found in the ROD (USEPA, 2008). In November 1999, after unsuccessfully working with MERECO to fully comply with the terms of its RCRA permit, NYSDEC requested that USEPA take over as lead agency for the Site under CERCLA. In September 2000, USEPA initiated a Remedial Investigation (RI)/Feasibility Study (FS), which, while based on data collected under NYSDEC as the lead agency, also generated additional data to complete a full characterization of the Site.

The Proposed Plan addressing contamination at the Site was prepared by and released in March 2008. A notice of the Proposed Plan and public comment period was placed in the Albany Times Union on March 30, 2008, consistent with the requirements of the NCP 40 CFR 300.430(f)(3)(i)(A). The public notice established a 30-day comment period from March 30, 2008 to April 30, 2008. In response to a written request to extend the public comment period, the comment period was extended to May 30, 2008. A second notice was placed in the Albany Times Union on April 13, 2008 to announce the 30-day extension of the comment period. The Proposed Plan and all relevant documents in the Administrative Record were made available to the public at two information repositories, namely: the USEPA Superfund Records Center at 290 Broadway, New York, New York 10007 and the William K. Sanford Town Library, 629 Albany Shaker Road, Albany, New York 12211. USEPA hosted a public meeting on April 22, 2008, at the Fuller Road Firehouse to discuss the Proposed Plan and the alternatives considered for the Site. At this meeting, representatives from USEPA answered questions about the contamination at the Superfund Site and the proposed remedial alternative.

The field work and sampling performed by USEPA during the Remedial Investigation (RI) characterized the nature and extent of contamination in the soils, surface water, sediments, fish tissue and groundwater at the Site. A general discussion of these findings is presented in the ROD for the Site (USEPA, 2008).

2. PROJECT ORGANIZATION AND PERSONNEL RESPONSIBILITIES

2.1 Primary Contractors

The Supervising Contractor retained by the Settling Parties is Brown and Caldwell Associates (BC). BC is licensed to provide professional engineering services in New York State. Tamara Sorell, Ph.D. will serve as BC's Project Manager for the RD activities. Frank Williams, PG of BC will serve as the SOW-defined Project Coordinator and is responsible for overall management, coordination, and communication among the Group, BC and the other contractors, and the agencies. With the concurrence of the Group and USEPA, the role of Project Coordinator may be reassigned to an engineer once the pre-RD investigation activities are substantially completed.

Responsibility for maintaining QA/QC during the interim action, pre-design and remedial design activities principally lies with the BC Project Manager (PM) and QA Officer, although proper implementation of QA/QC requires that the entire project staff is cognizant of appropriate procedures and goals. An organization structure has been developed to identify the roles and responsibilities of the various personnel involved with the Site. The structure for this project includes USEPA, the Group, BC, and other subcontractors. Project organization and responsibility functions, along with communication pathways and qualifications, are presented in Worksheet Nos. 4 through 7 in Attachment A.

USEPA Region 2 is the lead agency overseeing the activities occurring at the Site. BC will provide support to the Group, and will receive technical and cost direction solely from the Group or David Rosenblatt, Esq. (as the Group's representative). The Group, through the efforts of BC, will be responsible for obtaining any access approvals needed by BC or its subcontractors to perform various field activities.

2.2 Other Contractors

Other contractors may be retained to provide various services, typically under subcontract to BC, as described below:

- **Analytical Laboratory** - The analytical laboratory subcontractor will provide analytical services for solid and aqueous media. They will be responsible for providing sample bottles and preservatives (as necessary) and providing laboratory analysis and appropriate data reporting. BC intends to subcontract TestAmerica of Buffalo, New York as the analytical laboratory. TestAmerica Buffalo has provided BC with the analytical laboratory-related input for this QAPP.
- **Geotechnical Laboratory** - The geotechnical laboratory subcontractor will provide geotechnical testing for solid media. They will be responsible for identifying the proper volume and sample container (Shelby tube, bulk, etc.) for the field samples and for adhering to the appropriate ASTM or other methodology for testing the samples. GeoTesting Express of Boxborough, Massachusetts has provided the geotechnical laboratory-related input for this QAPP.
- **Drilling Services** - The drilling subcontractor will be responsible for acquiring drilling permits, utility clearances, and supplying services (including labor, equipment, and materials) required to perform the drilling activities, including soil borings, collection of subsurface soil samples, monitoring well abandonment, and monitoring well installation and development. They will also be responsible for the

maintenance and quality control of the equipment needed to perform those activities. The drilling subcontractor will be responsible for containerizing and transporting investigation-derived waste (IDW) from remote locations to the temporary staging area on the MERECO property. The drilling subcontractor will also be responsible for following equipment decontamination procedures. Upon completion of the work, the drilling subcontractor will be responsible for decontaminating all equipment prior to demobilizing from the Site. Monitoring well installation and abandonment activities will be in accordance with the applicable state and federal guidance and regulations.

- **Surveying Services** - The survey subcontractor will be licensed in New York and will be responsible for supplying services (including labor, equipment, and materials) required to provide land survey data as required, including the horizontal coordinates and vertical elevations of the ground surface for sample locations, and other locations as indicated by BC.
- **Waste Disposal Services** - The waste disposal subcontractor will be responsible for supplying services (including labor, equipment, and materials) required to perform the off-site transportation and disposal of aqueous and non-aqueous IDW residuals. The subcontractor will be appropriately licensed and insured and will dispose of all IDW residuals at licensed facilities approved by BC and the Group. All waste manifests will be signed by BC on behalf of and as agent for the Group.

3. QUALITY ASSURANCE OBJECTIVES

Quality assurance objectives have been developed in a systematic process as part of the QAPP as presented in Worksheet Nos. 9, 10 and 11 (Attachment A) and in the following sections.

3.1 Data Quality Objectives (DQOs)

Implementation of pre-design and interim action activities as specified in the RDWP focuses on satisfying the following Data Quality Objectives (DQOs):

- Define the vertical and lateral extent of soils with mercury concentrations in excess of 5.7 mg/kg (ppm) to be excavated for treatment/disposal (ROD, p. 46).
- Perform a pilot scale treatability study of in-situ solidification/stabilization (ISS) to evaluate the effects of incomplete mixing, high moisture content, particle size, pH/redox potential, material inconsistencies, and augering vs. grout injection (ROD, p. 40).
- For ISS, define the vertical and lateral extent of soils associated with dissolved mercury concentrations in excess of 0.7 µg/L (ROD, p.46).
- Acquire baseline Hg soil vapor concentrations to evaluate the potential effect of ISS on Hg vapor intrusion.
- Evaluate the use of a subsurface barrier to guard against exacerbation of groundwater contamination during implementation of the ISS remedy.
- Perform a geotechnical evaluation to assess the use of angle drilling for implementing the ISS remedy underneath the Phase 1&1A Building and/or the Container Storage Building.
- Define the vertical and lateral extent of sediments in the unnamed tributary with mercury concentrations in excess of 1.3 mg/kg to be excavated for treatment/disposal (ROD, p. 46).
- Delineate localized wetlands along the unnamed tributary that may be affected by remediation (ROD, p. 17).
- Confirm that manganese, arsenic and thallium detected in monitoring well OW-3 are not site-related (ROD, p. 14).
- Determine hazardous/non-hazardous waste disposal requirements for on-site soils (ROD, p. 46).

3.2 Project Quality Objectives (PQOs)

Specific project quality objectives (PQOs) have been developed through a systematic planning process. These are statements intended to clarify the project's objectives; define the appropriate type of data and acceptance/performance criteria, including where, when, and how many samples to be collected, and if required, specify the tolerable levels of potential decision errors. The PQOs are discussed in the following subsections.

3.2.1 Who Will Use the Data?

Data will be used by the Group, their contractors, the public, and USEPA.

3.2.2 What Will the Data Be Used For?

- The data will be used to evaluate the aforementioned DQOs listed in Section 3.1 and to develop a RD that meets the requirements of the RD AOC, SOW and ROD. The project Performance Standards are those described in the SOW, as follows:
  - Excavate all surface soils and subsurface soils above the water table which have a concentration of mercury above 5.7 ppm
  - Immobilize mercury in soils below the water table at the Site where the groundwater has a dissolved mercury concentration which exceeds the cleanup level of 0.7 µg/L. Remove or stabilize surface and vadose zone soils where the groundwater has a dissolved mercury concentration which exceeds the cleanup level of 0.7 µg/L. This removal would include soils beneath the existing asphalt/concrete cap but not soils beneath the Container Storage Building or the existing clay cap; and
  - Remove, dewater, and dispose of mercury-contaminated sediment in the Unnamed Tributary exceeding cleanup level for mercury in sediment of 1.3 ppm;
- Analytical sensitivity must be adequate to detect and quantify the concentrations of each of the listed constituents to the concentrations of their respective action levels;
- The data will be used to evaluate the vertical and lateral extent of unsaturated soils and sewer bedding with mercury concentrations in excess of 5.7 mg/kg; to evaluate the vertical and lateral extent of saturated soils containing dissolved mercury in excess of 0.7 µg/L; to perform a pilot scale treatability study of in-situ solidification/stabilization (ISS); to define the vertical and lateral extent of sediments in the unnamed tributary with mercury concentrations in excess of 1.3 mg/kg; to confirm that manganese, arsenic and thallium detected in monitoring well OW-3 are not site related; and to determine hazardous/non-hazardous waste disposal requirements for on-site soils.

3.2.3 What Type of Data is Required?

- Groundwater quality data are needed for the parameters, well locations, and monitoring frequency as stated in Section 4.5;
- Groundwater elevation data are needed from the wells and at the frequency as stated in Section 4.5;
- Soil/sediment quality data are needed for the parameters and locations described in Sections 4.2, 4.3, 4.4, 4.5, and 4.7;
- Geotechnical data are needed for the parameters and locations described in Section 4.4;
- Waste characterization data are needed for the parameters and wastes described in Section 4.2, 4.3, 4.4, 4.5, and 4.7;
- Survey data are needed for the locations described in Section 4.8.
- Soil Vapor data are needed as a baseline for future evaluation of the ISS remedy as described in Section 4.6.

3.2.4 How "Good" do the Data Need to Be?

A primary Measurement Performance Criterion is adequate analytical sensitivity to meet the Performance Standards listed on Worksheet No. 15 in Attachment A.

3.2.5 How Much Data are Needed?

- The spatial distribution of the data is specified in Section 4;
- The temporal distribution of the data is specified in Section 4; and
- The specific analytical and geotechnical parameters to be tested for are specified in Section 4.

3.2.6 How Will the Data be Collected?

- The aqueous media samples (e.g., groundwater, etc.) destined for chemical analysis will be collected using the procedures specified in Section 4.5 and 4.7;
- The specified aqueous media samples will be analyzed by TestAmerica Buffalo following SW846 analytical methodologies and SOPs as presented in Attachment B;
- Groundwater elevation data will be determined from depth to liquid field measurements using electronic water level meters/interface probes and survey data;
- The solid media samples (soil, waste, sediment etc.) destined for chemical analysis will be collected using the procedures specified in Sections 4.1 through 4.5 and 4.7;
- The specified solid media samples will be analyzed by TestAmerica Buffalo or North Canton following SW-846 analytical methodologies and SOPs presented in Attachment B;
- Geotechnical samples will be collected in the appropriate containers using those procedures described in Section 4.4 and tested by the geotechnical laboratory in accordance with the appropriate ASTM Standards presented in Attachment C; and
- Survey data will be obtained by a licensed New York surveyor in accordance with the required horizontal and vertical accuracy specified in Section 4.8.

3.2.7 Who Will Generate the Data?

- Qualified personnel from BC will collect the aqueous and solid media samples, with the appropriate assistance provided by the drilling services subcontractor;
- Qualified personnel from BC will collect the geotechnical samples, with the appropriate assistance provided by the drilling services subcontractor;
- Qualified personnel from TestAmerica Buffalo will perform the analytical laboratory analyses and provide the analytical data;
- Qualified personnel from the geotechnical laboratory will perform the geotechnical laboratory testing and provide the geotechnical data;
- Qualified personnel from the subcontracted surveying company will perform the survey activities and provide the survey data; and
- Qualified personnel from BC will obtain depth to liquid level measurements.

3.2.8 How Will the Data be Reported?

- Field data will be recorded on field data sheets and/or field log books in accordance with Section 5.3.1. Original field data sheets and logs and copies thereof will be maintained in accordance with Section 3.2.9;
- Laboratory analytical data will be reported to BC in two formats:
  - New York State Category B Laboratory deliverable, which includes
    - A detailed report narrative summarizing the contents and results
    - Chain-of-Custody Documentation

  - Sample Information (dates collected, date extracted or digested, and analyzed)
  - Analytical method and reference
  - Data (including all raw data and CLP-like summary forms) for samples, laboratory duplicates, method blanks, and QC samples; includes percent solids (where applicable)
  - Method and/or instrument detection limits
  - Run, standard and sample preparation logs
  - Standard preparation logs
- Electronic data deliverable (EDD) of the aforementioned in a BC-specified format;

- Geotechnical data will be reported to BC in hard copy format, including all calculation sheets;
- Survey data will be reported to BC in both hard copy and electronic format, and will include three columns of data: the northing coordinate, the easting coordinate, and the elevation (MSL-mean sea level); and
- Data will be reported to USEPA as appendices to the RD submittals, with the data summarized in tables contained within the body of the report. An electronic version of the complete report, in PDF format, will also be provided.

3.2.9 How Will the Data be Archived?

- Aforementioned electronic files will be maintained in their native formats on a server located in BC's Allendale, New Jersey office;
- Tape backups of the files on the servers are made periodically which will be stored at an off-site location for a minimum of ten years, as required in the RD AOC; and
- A paper copy of the complete Remedial Design Report and the associated project file will be maintained either at the BC office in Allendale, New Jersey or an off-site document repository for a minimum of 10 years, as required in the RD AOC.

3.3 Comparison Criteria

Analytical data results will be compared to the Performance Standards described in the SOW (Worksheet No. 15 in Attachment A). Samples analyzed for those constituents listed in Worksheet No. 15 must be analyzed with sufficient sensitivity to have detection limits at, or below, the standards presented.

3.4 Analytical Data Quality Categories

Analytical PQOs, also called measurement performance criteria, are composed of written expectations for precision, accuracy, representativeness, comparability, and completeness of a data set. Additional QA/QC requirements to satisfy analytical PQOs for the project include sensitivity of the analytical methods (detection limit verification) and blank contamination evaluation. The PQO process provides a logical basis for linking the QA/QC procedures to the intended use of the data, primarily through the decision maker's acceptable limits on decision error. Two descriptive data categories – field/screening data and analytical data - will be used for the Site.

Field/screening data are generated in the field, and are not critical to project objectives. QA/QC elements associated with screening data include sample documentation and calibration. Portable instruments to be used during the field investigation to collect screening data include:

- Temperature meter;
- pH meter;
- Turbidity meter;
- Specific conductivity meter;
- Water level meter; and
- Mercury Vapor Analyzer (Jerome 431-X) and
- Other parameters associated with groundwater sample collection.

Analytical data are generated from analysis of samples collected at the Site and have satisfied known QA/QC acceptance or performance criteria requirements. Analytical result data provided by the laboratory are critical to project objectives. QA/QC elements of definitive data include determination and documentation of calibrations, detection limits, method blanks, controls, and matrix spike recoveries. Additional information on analytical QC sample elements and their acceptance criteria is provided in Worksheet No. 12 (Attachment A).

3.5 QA/QC Characteristics

The overall QA/QC objective for data collection activities from the Site is to provide data of known and documented quality and sensitivity, allowing comparison to the Performance Standards described in the SOW, through the use of developed and implemented procedures. Quality characteristics for data are determined by the evaluation of the precision, accuracy, representativeness, comparability, and completeness of the analytical results, sensitivity of method/detection limit verification, and blank contamination quantitation and minimalization. Data quality objectives for each of these parameters are determined based on the level of data required. Descriptions of these characteristics are provided below, and specific QA/QC objectives for both screening and definitive data are presented on Worksheet No. 12 (Attachment A), including matrices and methods.

3.5.1 Precision

Precision is the measurement of agreement in repeated tests of the same or identical samples, under prescribed conditions. Precision data indicate how consistent and reproducible the field sampling or analytical procedures have been. Analytical precision can be expressed in terms of Relative Percent Difference (RPD) or Relative Standard Deviation (RSD).

When only two aliquots of a sample are analyzed, either two representative portions from a single field location or two aliquots of a prepared sample at the laboratory, these samples are referred to as "duplicates." Duplicate precision is evaluated by calculating the RPD between the concentrations of the two samples, and the smaller the RPD, the greater the precision. RPDs are calculated using the following equation:

$$RPD = \frac{|Vo - Vd|}{0.5(Vo + Vd)} x100$$

Where: Vo is the original sample concentration value and Vd is the duplicate sample concentration value.

When three or more aliquots are analyzed, these samples are referred to as "replicates," and replicate precision is evaluated by calculating the RSD. RSD, also known as the coefficient of variation, is calculated using the following equation, and the smaller the RSD, the greater the precision:

$$RSD = \frac{SD}{Mean} x100$$

Where: SD is the Standard Deviation, and is calculated by:

$$SD = \sqrt{\frac{\sum_{i=1}^{n} (x_i - \bar{x})^2}{n-1}}$$

Where: x_i is each individual value used for calculating the mean; x is the mean of *n* values; and *n* is the total number of values.

The precision of analytical environmental samples has two components - laboratory precision and sampling precision. Laboratory precision is determined by measurements of laboratory duplicates/replicates and by analysis of reference materials. The objectives for laboratory precision are specified in the analytical methodologies and are presented on Worksheet No. 12 (Attachment A).

The precision of the field sampling effort is determined by the analysis of field duplicate samples; (see Section 8.1.1). Field duplicate analysis will be performed at a rate of no less than one duplicate for every 20 samples per matrix, and acceptance criteria for these duplicates will be an RPD of 50 percent for aqueous samples and 100 percent for solid samples.

The precision limits provided in Worksheet No. 12 for the screening measurements are acceptance criteria for duplicate and calibration analyses of field measurement parameters.

3.5.2 Accuracy

Accuracy is the degree of agreement of a measured sample result or average of results with an accepted reference or true value. It is the quantitative measurement of the bias of a system, and is expressed in terms of percent recovery (%R). Measurements of accuracy for the laboratory include surrogate spike, laboratory control spike, matrix spike, and matrix spike duplicate samples. The laboratory must meet or exceed the control limit objectives, as stated in Worksheet No. 12 (Attachment A) and the applicable methodologies.

The analytical accuracy will be evaluated using %Rs, which are calculated as below:

For laboratory control spike or surrogate spike samples:

$$\%R = \frac{SSR}{SA} x100$$

Where: SSR is the spiked sample concentration value (measured value), and SA is the spiked concentration added (true value).

For matrix spike/matrix spike duplicate samples:

$$\frac{SSR - SR}{SA}$$

Where: SSR is the spiked sample concentration value, SR is the unspiked sample concentration value, and SA is the spiked concentration added.

3.5.3 Representativeness

Representativeness is the degree to which the results of the analyses accurately and precisely represent a characteristic of a population, a process condition, or an environmental condition. In this case, representativeness is the degree to which the data reflect the contaminants present and their concentration magnitudes in the sampled Site areas. Sample homogeneity and sampling/subsampling variability must be considered during project planning to obtain a higher degree of representativeness. Representativeness of data will be obtained through the proper selection of sampling locations and implementation of approved sampling and analytical procedures. Results from environmental field duplicate sample analyses can be used to assess representativeness, in addition to precision.

3.5.4 Completeness

Completeness is defined as the percentage of samples that meet or exceed all the criteria objective levels for accuracy, precision and detection limits within a defined time period or event. It is the measure of the number of data "points" which are judged to be valid, usable results. The objective for completeness for this field investigation is [95 percent], and will be calculated by dividing the number of usable data results (i.e., those results not considered to be "rejected" and/or those samples not able to be analyzed) by the number of possible data results (i.e., the total number of field samples collected), and then multiplying by 100 percent, as shown:

$$\% \text{ Completeness} = \frac{Dv}{Dt} x100$$

Where: Dv is the number of usable valid data values (i.e., all results not "rejected" during data verification and all samples able to be analyzed) and Dt is the total number of possible data values (i.e., both valid and rejected data values among all samples collected).

3.5.5 Sensitivity

Sensitivity is the ability of the analytical method or instrument to detect a target analyte at the level of interest. The method detection limit (MDL) is a statistically-derived value that represents a 99 percent confidence level that the reported instrument signal is different from a blank sample. The quantitation limit (QL) is the minimum concentration of an analyte that can be routinely identified by the laboratory, and is generally between three and ten times the MDL. Analytical methods are matrix-, moisture- and dilution-dependent. The sample quantitation limit (SQL) actually determined for a constituent for a specific sample may be higher than the QL due to these issues.

For the purposes of the sampling activities associated with this Site, the MDLs must be at or below the associated Performance Standards described in the SOW.

3.6 Impact of Failure to Meet Data Quality Objectives

The QA objectives presented in Worksheet No. 12 (Attachment A) represent the data quality necessary to meet the project's technical goals. The QA/QC efforts discussed in this QAPP focus on managing measurement error, and ultimately providing an understanding of the potential impact uncertainty may have

on data usability of the measurement data for the project. QA objectives will be evaluated throughout the investigation effort to evaluate the results relative to compliance to the project stated objectives. If these objectives are not being met, the usability (i.e., the precision and/or accuracy) of the sampling data may be impacted. The severity of the impact to the data usability must consider the end use of the data, the standards that the data are being compared to, and the reported concentration relative to the standard (e.g., estimated data result that is substantially less than the associated standard represents less of a usability impact than undetected data with detection limits greater than the standards or estimated data results very close to an associated standard).

3.7 Data Usability and Reconciliation with User Requirements

As the data verification tasks proceed and are completed, and QA objective evaluations are performed throughout the duration of the project, the usability of the data in meeting the stated project objectives will be continually assessed by the appropriate technical staff. Data verification and QA objective evaluations will be performed upon the receipt of each data deliverable. This data verification will culminate in the determination of the usability of the data in meeting the stated project data objectives. Limitations on the use of data collected for the project will be communicated to appropriate users. Decisions regarding the resolutions of the issues raised by the data users will be coordinated and documented by the BC PM in concert with the USEPA RPM, as appropriate.

4. INVESTIGATION ACTIVITIES AND SAMPLING PROCEDURES

This section provides a detailed description of the planned field investigation and sampling operations. The field program to be performed at the Site is summarized in Worksheet Nos. 14 and 18 in Attachment A. The project monitoring schedule is presented in Worksheet No. 16 in Attachment A. A comprehensive description of the proposed field investigation, with detailed field procedures described, is also provided in the RDWP. Proposed sampling points (soil, sediment and/or monitoring well locations) will be located by a New York State licensed surveyor and established using stakes, flags, surveyors paint, or similar methods before the sampling event(s). Coordinates will be referenced to the State Plane coordinate system for New York using the North American Datum of 1983 (NAD 1983) in units of feet. Elevations will be referenced to the National Geodetic Vertical Datum (NGVD) of 1929 in units of feet. The surveyor will provide coordinate and ground surface elevation information for the sampling points to be staked out. Any sampling points that need to be altered based on Site conditions (i.e. subsurface refusal, utilities, etc.) or those locations not previously surveyed will be marked clearly and staked securely until such time that the locations are either surveyed or recorded onto a scaled map of the Site. Survey requirements are discussed in additional detail in Section 4.8. The survey will also include topographic and property boundary lines for the potential remediation areas addressed in the ROD.

As part of the proposed soil delineation sampling (discussed below) to be conducted within Areas A through E, sampling points will be staked out based on a 20-foot center grid. Approximately 125 locations will be staked out as part of this sampling grid. Refer to Figure 2 for proposed sampling locations in these Areas. The soil sampling grid system provides unbiased soil sampling throughout the five areas (A-E) designated in the ROD. Sampling on 20-foot centers at 0.5-foot depth intervals is equivalent to a sampling rate of approximately one sample for every 12 tons of soil that may be excavated, a rate that is sufficient for designing remedial excavations, waste characterization, as well as for financial planning.

4.1 Pre-Design Investigation Soil Removal

Concentrations of mercury in excess of screening criteria have been detected in unsaturated (vadose zone) soils at the MERECO Site. The ROD divides the Site into four schematic areas (A, B, C, D) for the excavation of soils containing concentrations of mercury in excess of 5.7 mg/kg (ppm). A fifth schematic area (E) is designated for application of ISS in areas associated with dissolved mercury concentrations in excess of 0.7 µg/L. Depending on geotechnical and cost-effectiveness factors, some or all of the vadose zone soils in areas designated for application of ISS may be excavated in lieu of application of ISS to those soils. The highest concentrations of mercury in soil have been observed within the eastern portion of the MERECO Site (within Area E). The distribution of mercury concentrations indicates that spills or discharges within limited areas are the likely sources. Given the high specific gravity of mercury, distribution in the subsurface soils is predominantly vertically downward. The deepest impacts of mercury to soils have been observed within Area E and elemental mercury has been observed at depths up to 66 feet below grade surface (ft bgs) near the surface of the Lake Albany Silt and Clay confining layer.

Previous delineation sampling is limited and therefore, the extent of mercury contamination in soils is poorly defined. Lateral and vertical delineation of soils within Areas A through E is required to determine the extent of impacted soils. The soil delineation sampling will be limited to the vadose zone soils within Areas A through E. This investigation will be completed via direct-push drilling technologies at approximately 125 locations within Areas A through E.

Drilling with direct-push technologies is a standard method of subsurface drilling which allows the recovery of representative subsurface samples for identification and laboratory testing with minimal disturbance to the samples. Depending on Site logistics, a direct push rig (e.g., GeoProbe®, Humcane, etc.) may be used to advance borings. Continuous soil samples will be collected from each soil boring using a 4-foot macro-core sampler with a dedicated, clean acetate liner. Each 4-ft macro-core sampler will be advanced only 2 feet before retrieval to improve overall recovery and depth control within the entire direct push boring.

Samples from each sampler will be screened in the field using a Jerome 431-X mercury vapor analyzer (MVA) readings for each sample interval will be recorded on a field log. Calibrating procedures and instructions for using an MVA will be as determined by the individual manufacturer. The samples will also be screened for noticeable signs of contamination (i.e., visible elemental mercury). Soil samples will be observed for physical properties such as color, sorting, etc. The grain size of the sampled soils will be visually characterized in the field by an experienced hydrogeologist and logged in accordance with a system after Burmister (1959). In addition, the Burmister classification will be converted to the Unified Soil Classification System (USCS) on the final boring log. Procedures for recording field data are provided in Section 5.3.

Soils within Areas A through E will be collected for chemical analysis in continuous six-inch intervals to pre-determined depths based on prior rounds of sampling. It is estimated that continuous soil sampling will be completed within Areas A through C to depths of approximately two (2) feet below grade surface (ft bgs). Samples collected within Areas D and E, where contamination is known to extend to deeper depths, will extend to depths of approximately ten ft bgs (Area D) or the top of the water table in Area E (10-15 ft bgs). Samples for chemical analysis will be immediately transferred from the acetate liners via the use of stainless steel scoops, trowels, or equivalent tools to appropriate laboratory-supplied containers and stored and handled according to procedures outlined in Section 5.2. Sampling equipment shall be disposed of or decontaminated after the collection of each sample in accordance with the procedures outlined in Section 4.10.

Samples (including QA/QC samples) will be analyzed by Test America of Buffalo, New York for Mercury by USEPA Method SW-846 7471A. Previous data indicate that exceedances of the cleanup level (if any) are typically limited to depths of 6 inches or less. Therefore, with the exceptions listed below, the laboratory will be instructed to analyze the samples sequentially based on depth, with the two most surficial samples (0-0.5 ft. and 0.5-1.0 ft bgs) analyzed first. Analysis will continue to subsequent depths, if appropriate, until results indicate that mercury is detected at concentrations less than 5.7 mg/kg. For RDI borings at the previously sampled locations listed below, the specified deeper sample interval will be analyzed regardless of the analytical results for the shallower samples, since previous sampling results indicate there is a potential for exceedance of the cleanup level below one foot.

- Area A, RFI borings SB-25 and SB-32 (1.0-1.5 ft bgs)
- Area B, RFI borings SB-26 and SB-28 (1.0-1.5 ft bgs)
- Area B, RFI boring SBS-05 (2.0-2.5 ft bgs)
- Area C, RFI boring SB-40 (1.0-1.5 ft bgs)

Each borehole will be backfilled with clean fill (sand) or bentonite pellets upon completion and any soil not used for chemical analysis will be handled in the same manner as investigation derived waste as outlined in Section 4.9.

Waste characterization sampling will also be completed for the proposed off-site disposal of soils within Areas A through E to determine whether the proposed excavated soils could be considered a hazardous waste. Select soil samples (approximately 5%) from the delineation sampling investigation will additionally be

analyzed for Toxicity Characteristic Leaching Procedure (TCLP) Mercury by USEPA Method SW-846 7470A. Samples will be selected for waste characterization sampling based on field screening results that indicate the potential for elevated mercury concentrations (e.g., elevated mercury vapor readings, visible elemental mercury). In addition, the laboratory may be instructed to perform TCLP testing on a sample material if elevated total mercury results are obtained for that sample.

4.2 Sewer Investigation

The original storm sewer that serviced the Mercury Refining facility was plugged and abandoned in place in 1985, during Site remediation conducted under NYSDEC auspices. The NYSDEC reportedly conducted a video survey/reconnaissance of the storm sewer system prior to its abandonment; however the whereabouts of the video tape has not been identified. At the time of the sewer abandonment, a 6-8-inch diameter PVC replacement storm sewer was constructed parallel to the original storm sewer. The current stormwater sewer/catch basin system is composed of four storm sewer sections with six catch basins. Previous sampling of the sediment within the catch basins revealed exceedances of inorganics, including mercury. The ROD requires the excavation of storm sewer sediments and surrounding soils (storm sewer bedding) with concentrations of mercury in excess of 5.7 mg/kg.

The catch basins of the current storm sewer have been plugged and the storm sewer is currently inactive.

The current storm sewer pipe will be surveyed with a video camera to determine if significant accumulations of sediment are present in the sewer pipe. At a minimum, significant accumulations of sediment would consist of enough material at any location in the sewer pipe to enable a 4-oz. sample to be readily collected by utilizing a dipper extended from the surface. To perform the video survey, the catch basins will be unsealed and/or portions of the piping opened. An excavator will be required to remove soils above portions of the sewer system and break portions of the piping. Excavated soil and sewer bedding will be temporarily stockpiled on polyethylene sheeting.

Significant accumulations of sewer sediment (if any) identified during the video survey will be immediately sampled. At a minimum, significant accumulations of sediment would consist of enough material at any location in the sewer pipe to enable a 4-oz. sample to be readily collected by utilizing a dipper extended from the surface. Sewer sediment samples (if any) will be collected from the sewer pipe via the use of a dipper or equivalent tool extended from a safe location at grade to the required sampling depths. Samples will be screened and logged in the field as described in Section 5.3. Upon completion of sewer sediment sampling the sewer excavations will be backfilled with the stockpiled material in the order it was removed (last out, first in). Sewer backfill will be tamped with the excavator bucket in 1-2 foot lifts.

Sewer bedding samples will be collected at the ten locations shown in Figure 2. The bedding sampling will target the original and the current storm sewer systems, and will be conducted using direct-push (GeoProbe®) methods. Sewer bedding sample locations may be adjusted based on review of the sewer video and identification of any areas of potential exfiltration (e.g., open pipe joints or depressions in the sewer line). Sampling of surrounding sewer bedding will be biased to those areas of greatest potential exfiltration. The number of proposed sewer bedding samples (10) over approximately 430 linear feet of sewer (original and replacement combined) is equivalent to approximately 1 sample for every 40 feet of sewer. The proposed locations (Figure 2) provide at least one sample for each potentially impacted leg of the original and replacement storm sewers.

Samples selected for chemical analysis will be immediately transferred from the dipper via the use of stainless steel scoops, trowels, or equivalent tools to appropriate laboratory-supplied containers and stored and handled according to procedures outlined in Section 5.2. Sampling equipment shall be disposed of or

decontaminated after the collection of each sample in accordance with the procedures outlined in Section 4.10.

The samples will be analyzed by Test America of Buffalo, New York for Mercury via USEPA Method SW-846 7471A. One sample each of sewer sediment and bedding will additionally be analyzed for TCLP Mercury via SW-846 7470A. TCLP samples will be selected based on field screening results that indicate the potential for elevated mercury concentrations (e.g., elevated mercury vapor readings, visible elemental mercury).

4.3 Sediment Delineation Sampling

The ROD requires that sediments within the Unnamed Tributary containing mercury at concentrations above 1.3 mg/kg be excavated and disposed of off site. The sediment sampling in the Unnamed Tributary (Figure 3) is intended to delineate the lateral and vertical extent of contaminated stream sediments in excess of the cleanup level of 1.3 mg/kg. The sample locations extend at 10-12 foot intervals along the stream bed from the mouth of the storm sewer outfall, where previous sampling identified exceedances of the cleanup level, to the culvert extending under the railroad tracks. Two sample locations have been identified to evaluate potential impacts upstream from the sewer outfall that may have been caused by stagnating flow or stream backup in this area. The spacing of the samples is sufficient for designing sediment removal, waste characterization, and financial planning.

Previous sampling of the sediments within the Unnamed Tributary revealed elevated concentrations of mercury at two locations (SD-03/SD-101), near the former storm sewer outfall located adjacent to the MERECO Property. The exceedances in sample SD-03 extend from near surface to a foot below the sediment surface, but deeper intervals were not sampled. Remaining downstream locations were below action levels. The next nearest downstream sample (SD-4) appears was located south of the culvert extending under the railroad tracks. The lateral and vertical extent of contaminated stream sediments in excess of the cleanup level will be delineated in the vicinity of the outfall and the portion of the stream upstream from the railroad culvert.

Sediment samples will be collected at the six locations shown in Figure 3. Sampling will be completed in continuous six-inch intervals to depths of approximately three feet below the sediment surface. Sediment samples will be collected in a "downstream" to "upstream" direction (i.e., in a direction opposite the flow), to minimize the chance of spreading disturbed sediment to unsampled locations.

Sediment sampling will be completed via the use of a hand corer (or equivalent device) as this method can be used to collect a relatively undisturbed sample that shows a profile of stratification. Hand coring is a method by which a stainless steel hand corer or similar device is manually pushed or hammered into the sediment to a desired depth. Prior to pushing or hammering, the core tube will be filled with water to remove air above sediment/water interface. Once at the desired depth, the corer is twisted and pulled from the sediment in one motion. Sediment samples from the sediment/surface water interface may also be collected using decontaminated stainless steel sampling scoops, trowels, or other similar devices.

Sediment samples targeted for analysis will be collected with minimum disturbance and exposure to air. The amount of sediment in the core tubes will be measured to determine depth of penetration and recovery. Samples will be screened and logged in the field as described in Section 5.3. Using a decontaminated scoop, trowel, or equivalent tool, the sediment will be transferred by selected depth intervals directly to the laboratory-supplied sampling containers and stored and handled according to procedures outlined in Section 5.2. If an acetate liner is used in conjunction with the corer, the liner will be cut and the sediment

sample collected as previously described. Sampling equipment shall be disposed of or decontaminated after the collection of each sample in accordance with the procedures outlined in Section 4.10.

The sediment delineation samples will be analyzed for mercury by USEPA Method SW-846 7471A. A select number of samples (approximately 1-2 samples) will be analyzed for TCLP Mercury by USEPA Method SW-846 7470A.

4.4 Geotechnical Investigation

A geotechnical investigation will be performed to assess the impacts of excavation and/or in-situ stabilization on the integrity of the Phase 1 and Container Storage Buildings.

The geotechnical borings will be completed utilizing hollow-stem auger drilling methods. The borings will be advanced by rotating the augers to the desired depth into the subsurface soils. If heaving sands are encountered, clean potable water will be added to maintain a positive hydraulic head inside the auger. Boreholes will be sealed with grout by pumping it into the borehole using a tremie pipe (tremie method).

A total of 4 geotechnical borings will be completed in the vicinity of the Phase 1 and Container Storage Buildings to the top of the Lake Albany Silt and Clay confining layer (depths of approximately 65 ft bgs). The locations of the proposed borings are shown on Figure 2.

Standard Penetration Tests (SPTs) will be performed in each soil boring at 5-foot intervals using a split-barrel ("split-spoon") sampler. Jar samples (8 oz.) will be collected from each SPT for later testing (moisture content, gradation, Atterberg limits) as described below. All cohesive samples will be tested for estimated unconfined compressive strength with a Pocket Penetrometer. Shelby (thin-wall) tube samples will be collected at selected locations from cohesive layers, if encountered. Field sampling and testing methods are listed on Worksheets No. 21 and 22 in Attachment A. Samples will be logged as described in Section 5.3.

Laboratory testing will be performed on selected soil samples in order to provide characterization of the soils encountered in the borings and to provide input to the evaluation of the building foundation stability and bracing requirements during excavation and/or ISS. Samples will be selected for testing by a qualified geotechnical engineer based on the observed stratigraphy after the draft boring logs have been prepared. Characterization samples will be tested for moisture content, gradation (without hydrometer) and Atterberg limits (cohesive samples only). Unconfined compression and density tests will be performed on selected Shelby tube samples (cohesive samples only). The laboratory testing methods are listed on Worksheet No. 23 in Attachment A.

4.5 In-Situ Stabilization/Solidification (ISS) Investigation

The ROD requires that in-situ stabilization/solidification be used to immobilize mercury in surface soils, subsurface soils and soils below the water table where groundwater contains dissolved mercury concentrations in excess of 0.7 ppb. This includes soils beneath the existing asphalt/concrete cap but not soils beneath the Container Storage Building or the existing clay cap.

Previous groundwater quality sampling revealed only one location, MW-5D within Area E, with groundwater concentrations in excess of the 0.7 ppb cleanup value. This is the same location within the eastern portion of the Site where the highest concentrations of mercury were detected in soil and the elemental mercury was observed in soil near the confining layer. The area of impacted groundwater in the vicinity of MW-5D has

not been clearly defined and a combination soil/groundwater investigation needs to be completed in this area to evaluate the extent of soil and groundwater impacts.

The ISS investigation will include the collection of groundwater samples from properly constructed and developed monitoring wells using low-flow sampling procedures to minimize the influence suspended solids (turbidity). For planning purposes it is anticipated that approximately two monitoring wells will be installed at each of the six locations shown in Figure 2, for a total of approximately 12 monitoring wells. However, prior to installation of the monitoring wells, direct-push sampling of soil and groundwater will be conducted to preliminarily screen soil and groundwater for depth intervals with elevated mercury concentrations and aid in selection of monitoring well screen depths that correspond to higher mercury concentrations.

4.5.1 Direct-Push ISS Investigation

A total of six (6) soil borings will be completed via direct push technologies in the approximate locations of the monitoring wells shown in Figure 2. The borings will be advanced to the top of the Lake Albany Silt and Clay confining layer (depths of approximately 65 ft bgs). Continuous samples will be collected from the borings using a macro-core sampler with a dedicated, clean acetate liner as described in Section 4.1. The core barrel will be advanced the full 4 feet for this application. Samples from each split spoon will be screened in the field using an MVA and readings for each sample interval will be recorded on a field log. Calibrating procedures and instructions for using an MVA will be as determined by the individual manufacturer. The samples will also be screened for noticeable signs of contamination (i.e., visible elemental mercury, discoloration, etc.). Soil samples will be observed for physical properties such as color, sorting, etc. The grain size of the sampled soils will be visually characterized in the field by an experienced hydrogeologist and logged in accordance with a system after Burmister (1959). In addition, the Burmister classification will be converted to the Unified Soil Classification System (USCS) on the final boring log. Field logging procedures are provided in 5.3.1.

Soil samples will be collected from the acetate liner of the macro-core (as described in Section 4.1) from the six-inch interval(s) with the greatest MVA readings or visual evidence of contamination (i.e., elemental mercury). Up to eight soil samples per boring/location are proposed to be collected for laboratory analysis, based on estimates of the vertical extent of the most heavily impacted zones. The actual number of samples may be decreased or increased based on the prevalence of elevated MVA readings and noticeable elemental mercury. Soil samples will be analyzed for Mercury via USEPA Method SW-846 7471A. Accelerated (24 hour) laboratory turnaround will be requested to facilitate the groundwater screening described in the following paragraph.

After receipt of the unvalidated soil analytical results, a GeoProbe® Groundwater Sampler will be utilized to collect groundwater quality samples from various intervals within the saturated zone adjacent to each of the six boreholes described above. For planning purposes it is anticipated that groundwater samples will be collected for laboratory analysis at a rate of approximately one sample per ten foot interval within the saturated zone (approximately five samples per hole assuming a borehole end depth of approximately 65 feet). The precise groundwater sample intervals will focus on the depths with elevated mercury levels identified through soil sample analysis and field screening. The groundwater monitoring in Area E will be most conservative if it is biased toward groundwater with the highest concentrations of dissolved mercury.

The Groundwater Sampler will be advanced by the direct push methods (GeoProbe®) to selected intervals within the saturated zone at which time the outer casing of the sampler will be pulled back to expose a screen. Water will infiltrate the screen for a period of approximately 30 minutes (time will vary depending on the groundwater production rates of the various intervals). Based on the 2003 Supplemental RI sampling

conducted with direct push equipment, it is anticipated that the Groundwater Sampler will fill in a *reasonable* amount of time.

If the Groundwater Sampler yields a sample, a specifically designed, dedicated, disposable bailer with a check valve at the bottom will be gradually lowered until it contacts the water surface and is then allowed to fill as it slowly sinks in a controlled manner. Samples collected with bailers must be recovered with a minimal amount of aeration. Laboratory-supplied sample containers will be filled by allowing the bailer discharge to flow gently down the inside of the container with minimal turbulence. Given the turbidity that will likely be encountered with the groundwater samples obtained via this method, a filtered and non-filtered sample will be collected from each interval and submitted for laboratory analysis. Field filtration of the groundwater samples will be performed by vacuum methods with the use of a Buchner funnel fitted with a 0.45 μm pore size sample-dedicated filter disk or other appropriate field filtration device. The filtered and unfiltered groundwater data will be used to assess the contribution of sorbed mercury to the total mercury analytical results for any given sample interval. Typical field parameters (turbidity, pH, specific conductance, temperature, oxidation-reduction potential (ORP), and/or dissolved oxygen) will be measured unless the Groundwater Sampler does not yield sufficient volume in a reasonable amount of time for this purpose.

After collection of the samples, the bailer will be removed from the Groundwater Sampler and properly discarded. If the borehole remains open after retrieval of the direct-push Groundwater Sampler, the borehole will be grouted with a tremie pipe. Grout will consist of bentonite slurry to avoid elevated pH conditions potentially associated with cement/bentonite mixtures.

4.5.2 Hollow-Stem Auger ISS Investigation

Following review of the preliminary soil and groundwater screening data, conventional 2" PVC monitoring wells will be installed utilizing hollow-stem auger drilling methods. Continuous 2-ft split-barrel ("split-spoon") samples will be collected from each soil boring. The borings will be advanced by rotating the augers to the desired depth into the subsurface soils. If heaving sands are encountered, clean potable water will be added to maintain a positive hydraulic head inside the auger. Boreholes will be advanced using six inch hollow-stem augers. Using these methods will result in a borehole diameter that is greater than eight inches, or at least four inches larger than the outside diameter of the casing and well screen for a two-inch diameter monitoring well.

The overburden monitoring wells will consist of a two-inch diameter, PVC well screen (0.010-inch slot size), and a two-inch diameter PVC riser casing. Based on previous groundwater sampling conducted as part of the Feasibility Study in this area, it is estimated that shallow and deep overburden wells will be installed at each location at depths of approximately 15 and 50 ft bgs., respectively. These depths are based on the intervals of highest mercury contamination reported in the 2003 VPW samples (15', 35', and 45') and the screened interval of well MW-5D (50-60'). Well screen length will be 10 feet. The actual depths of the well screen intervals will be determined based on the intervals of greatest groundwater contamination from the direct push ISS investigation in Section 4.5.1.

The overburden monitoring wells will be constructed as follows:

- A flush-threaded, 2-inch diameter, Schedule 40 PVC well screen (ten feet in length) and riser casing, will be placed to the bottom of the borehole with the screened interval extending upward to the water table. Given a desire to reduce turbidity/suspended particles in groundwater samples, the smallest available screen size that will still yield enough water for groundwater sampling will be utilized. As the augers are slowly removed, a primary filter pack consisting of clean, washed sand will be placed in the annular space

around the well screen and riser casing from the base of the screen to approximately two feet above the screen. A secondary filter pack consisting of more finely grained sand will be placed above the primary filter pack at a thickness of one to two feet. Again, the size of the sand placed around the well screen will be proportionate to the size of the well screen, with the finest grain sand available used to filter and reduce the amount of suspended particles.

- Measurements of material depths will be made by frequently sounding the annulus with a weighted tape measure during installation. The volume of materials needed will be calculated and compared to the actual volume used.
- In monitoring wells which exhibit a water table elevation above the top of the sand pack, a layer of bentonite pellets, at least two feet thick will be placed above the sand pack to form an annular seal. The shallow depth of the Overburden monitoring wells should allow for placement of these materials by hand.
- In monitoring wells where the top of the sand pack is above the water table, bentonite pellets will not be used to form an annular seal, since complete hydration cannot be guaranteed. In those instances, granular bentonite will be mixed with water (as thick as possible) to form a pre-hydrated slurry which will be used in place of the pellets.
- Cement/bentonite grout will be placed from the top of the bentonite pellet (or slurry) seal to a point approximately four feet below existing ground surface. The grout will consist of one bag (94 pounds) of Portland cement and five pounds of bentonite mixed with six gallons of potable water.
- A five-foot long, four-inch diameter steel protective casing will be placed in the remaining annulus so that approximately two feet of its length remains above grade. Wells in highly trafficked areas of the Allied Building Products property will be completed with flush mount protective well vaults. The protective casing will be equipped with a secure lockable cap to prevent entry to the monitoring well. For additional protection, a cap will be placed on the monitoring well and a vent hole will be cut in the casing above the grout level to allow fluids to drain.
- The protective casing will be set in place with concrete. The concrete will be set in a four-foot square form at the thickness of at least four inches (4"). Steel reinforcing wire will be used within the concrete.

Drive and Wash Casing may be as an alternate method for monitoring well installation. Under this method, 5-inch ID steel casing is advanced to isolate the surrounding formation during the boring and well construction process. Upon reaching the target depth, a 2-inch diameter PVC pre-packed well screen (0.010-inch slot size) is installed and additional sand pack material is placed in the annulus surrounding the pre-pack screen as the 5-inch casing is withdrawn. The Drive and Wash Casing method will minimize "drag down" of mercury contamination from shallower intervals, and will enable better control over the placement of the sand pack around the well screen, a key element in minimizing the migration of suspended solids into the well.

Well development will be performed using the surge and evacuate method after a period of at least 24-hours following well construction. Well development will be considered complete when there is no visible increase in the clarity of the evacuated water. Given that suspended particles in Site groundwater are known to impact groundwater quality readings for metals, additional development time will be utilized to ensure that the sand pack around the well is properly cleared.

4.5.3 Low-Flow Groundwater Sampling

Objectives

The objective of the low-flow groundwater procedure is to collect samples from monitoring wells while exerting minimum stress on the water-bearing formation and minimizing the disturbance of sediment in the

well. The low-flow purging and sample collection technique follows the technique described within the USEPA documents titled "Ground Water Sampling Procedure, Low Stress (Low-Flow) Purging and Sampling", (USEPA, Region 2, March 16, 1998) and "USEPA Ground Water Issue: Low-flow (Minimal Drawdown) Ground-water Sampling Procedures" (EPA/540/S-95/504, April 1996). The general approach is to minimize the drawdown in the well during purging, thereby reducing disturbance prior to and during sampling. Typically this is accomplished by limiting the flow rate during purging and sampling to rates in the 100 to 500 mL/min range. The intended advantage of this procedure is the reduction in the turbidity and aeration of the samples, thereby producing samples which are more representative of the natural groundwater conditions. If well sampling or purging results do not meet the low-flow criteria (such that drawdown enters the screened zone or exceeds 0.3 feet) it will be noted in the field data sheets.

Equipment

- A submersible bladder pump.
- The discharge tubing will be laboratory- or food grade- polyethylene.
- Monitoring equipment during purging shall include a flow through cell equipped with field measuring devices for pH, turbidity, specific conductance, temperature, oxidation-reduction potential (ORP), and/or D.O.
- Water level measuring device, accurate to ±0.01 foot.
- Flow-rate measurement supplies such as graduated cylinders and stopwatch.
- Decontamination equipment and supplies.
- Well construction data.

Preliminary Site Activities

- Remove well cap and identify the pre-established elevation reference point on top of inside well casing.
- Measure and record the depth to groundwater (static water level) to within the nearest 0.01 foot from the reference point. Take care to minimize disturbance to the water column and avoid dislodging particulates attached to the sides of the well casing.
- In no case should any well be sounded prior to sampling as this may mobilize sediment in the bottom of the well.
- If dedicated equipment such as bladder pumps are not used, consideration should be given to placing the pump in the well 24 hours prior to sampling to allow any sediments in the well to settle.

Sampling Procedure

- **Install Pump** - Slowly lower the pump and downhole measuring device, as applicable, into the well to a depth corresponding to the center of the screened interval. The intake should be kept within the well screen but no deeper than two feet below the top of the screen to prevent mobilization of sediment from the bottom. If less than two feet of water is present in the well prior to sampling, the intake shall be centered in the water column. For problematic monitoring wells, consideration should be given to installing the pump approximately 24 hours before initiating purging.
- **Re-Measure Groundwater Level** - Before starting the pump, measure the water level again with the pump in the well. Do not proceed until the water level has returned to within approximately 0.3 feet of the static level.
- **Purging** - Start pumping the well at approximately 200 to 500 milliliters per minute. The water level should be monitored as frequently as feasible immediately after the start of purging and then at least as frequently as every three to five minutes once the level has generally stabilized. Ideally, a steady flow rate should be maintained which results in a stabilized water level. The goal should be to not induce a

drawdown in excess of approximately 0.3 feet (or approximately 2 percent of saturated thickness in low permeability formations). Pumping rates should, if needed, be reduced to the minimum capabilities of the pump to effect stabilization of the water level. However, care should be taken to maintain pump suction and to avoid entrainment of air in the tubing. If the recharge rate of the well is very low, care should be taken to avoid loss of pressure in the tubing line, cascading through the sand pack, or pumping the well dry. Record each adjustment made to the pumping rate, observation of changes in appearance of the water collected (e.g., increased turbidity or color) and the water level measured immediately after each adjustment.

- **Monitor Indicator Parameters** - During purging of the well, monitor the following field indicator parameters at the frequencies stated above; turbidity, temperature, specific conductance, pH, ORP and/or D.O. In-line analyzers and continuous readout displays are recommended for all parameters so that the sample is not exposed to air prior to the measurement. However, if this is not feasible, temperature and/or ORP may be omitted from the list of in-line parameters. The well is considered stabilized and ready for sample collection when three consecutive readings are within a maximum range (from minimum to maximum measurements) as follows: ±0.1 for pH, 3% for specific conductance, ±10% for D.O., ±10 mV for ORP, and ±10% for turbidity. Measurement of the indicator parameters should continue every three to five minutes until these measurements indicate stability in the water quality. If the parameters have not stabilized after about an hour, purge the well until a minimum of 3 well volumes have been removed and proceed to collect the samples. This alternate procedure should be noted on the field data sheet.
- **Collect Samples** - Samples should be collected at flow rates of between 100 and 250 mL/min, or under flow conditions such that drawdown of the water level within the well is not induced beyond the tolerances specified above. If volatile organic compounds (VOCs) are to be analyzed, they should be collected first and discharged directly from the pump discharge tubing into pre-preserved sample containers. Sample containers should be filled by allowing the pump discharge to flow gently down the inside of the container with minimal turbulence.
- **Remove Pump and Tubing** - After collection of the samples, the pump's tubing shall be properly decontaminated or discarded.
- **Well Depth** - Measure and record well depth.
- **Close Down** - Secure the well.
- **Decontamination** - The sampling equipment will be decontaminated between use at each well as described in Section 4.10.

One groundwater sample will be collected from each of the newly installed wells. Groundwater and QA/QC samples will be analyzed by TestAmerica of Buffalo for arsenic, manganese and thallium via USEPA Method SW-6010B. Mercury will be analyzed via USEPA Method 7470A/7471A.

4.6 Soil Vapor Investigation

Soil vapor (SV) samples will be collected from locations adjacent to the Phase 1 Building and beneath the floor slab of the building for the purpose of establishing baseline mercury vapor concentrations in soil gas prior to pilot testing/implementation of ISS. The locations will be selected in the field by the Site Coordinator (F. Williams), who will confer with the EPA before finalizing the locations. The locations will be selected based on proximity to the potential ISS location and to avoid interfering with present-day usage of the MERECO facility.

4.6.1 Installation of Soil Vapor Probes

Soil vapor probes will be installed from which soil vapor samples will be collected. The soil vapor probes will installed as follows:

- A direct-push drill rig (e.g., GeoProbe®) will be used to advance a 2-inch diameter borehole to a depth of 5 feet bgs.
- Once the borehole is complete a 2 foot long, 1-inch diameter PVC slotted screen (0.010") will be set in the borehole with clean silica sand filter pack material placed in the annulus surrounding the screen. The screened interval will be from 3 to 5 feet.
- A hydrated bentonite slurry will be placed in the annular space above the filter pack to provide a seal in the borehole from surface contamination and to minimize infiltration of ambient air.
- The top of the soil vapor probe will be completed with a male-threaded, appropriately sized tubing-barb to be used with the sampling tubing. The barb will be completed with a cap so that infiltration by outside air will be minimized.
- Soil vapor probes will be fitted with flush mount protective casings.

4.6.2 Collection of Soil Vapor Samples

Soil vapor samples will be collected no less than two weeks following the installation of the soil vapor probes. Samples will not be collected on days in which high humidity or rainfall may impact the readings from the field monitoring equipment.

- One (1) Teflon®-lined polyethylene sampling tube will be connected to the tubing-barb for use in sampling. The tube will be secured to not allow debris to clog the tube and/or potentially contaminate the sample. The sampling point will be sealed around the tubing using modeling clay.
- Prior to collecting the sub-slab soil gas sample, a "leak-test" will be performed to ensure tightness of the seal. A 3-gallon modified plastic bucket will be placed over the top of the sample point. The soil vapor sampling tube will be threaded through a gas-tight fitting in the bucket to allow for sample collection without removing the bucket. The base of the bucket will be suitably sealed to the ground or floor surface (e.g., using bentonite clay). The bucket will have tubing at the top of the chamber to introduce the tracer gas (helium) into the chamber and a valved fitting at the bottom to let the ambient air out while introducing tracer gas. A helium detector will be attached to the valve fitting at the bottom of the chamber to verify the presence of the tracer gas. The valve will be closed after the chamber has been enriched with helium at concentrations >50%. After the test set-up, the sample point will be purged of three volumes (inner volume of sample point and sample tubing) of soil gas. Purging will be conducted using an air pump adjusted to a low rate of 200 ml/min or less. During purging, the helium concentration will be monitored at the vent of the air pump. A helium reading of greater than 5% of the concentration within the bucket surrounding the sample point is indicative of a leak in the seal. If the readings indicate a poor seal, the sample point will be reset and the leak detection process repeated until it is found to be free of leaks.
- The sampling probe will be purged for approximately 10 minutes. This is intended to exchange air from the sampling tubing, which could potentially dilute or otherwise bias the sample.
- A reading will be taken with the mercury vapor analyzer to measure mercury vapors. At locations with mercury below the detection capability of the meter, selected samples will be analyzed by modified Method IO-5 to quantify the lower levels.

- To collect a sample for laboratory analysis for total mercury modified by IO-5, solid sorbent traps will be used with a Teflon particulate filter before the trap so that no particulate can be trapped and skew results. When assembling, installing and removing the traps particle-free gloves will be worn at all times and samplers will stand down-wind to prevent contamination by shedding particles from clothing, etc.
- The trap with filter will be connected to a pump which will draw air through the trap at a constant rate of 0.3 L/min. The calibrated range of the method is 5 ng to approximately 7.5 mg depending on the variety of trap used in sampling. Therefore, to target the method range, the pumping duration will likely be the minimum practical.
- The samples will be sent to Frontier Geosciences of Seattle, Washington for analysis.

4.7 Ecological Monitoring Baseline Investigation

In order to assess future impacts on biota after the mercury-contaminated sediments are removed from the unnamed Tributary, a monitoring program will be implemented for a period of 5 years following remediation. This monitoring program will include sampling sediment, surface water and fish tissue in the Patroon Creek, the unnamed Tributary to Patroon Creek and the I-90 Pond. Prior to implementing this monitoring program, one round of sampling will take place during the Remedial Design Investigation to establish a baseline for future sampling. The data objectives for the stream sampling program are:

- **Sediment:** to confirm that surface concentrations stay below the 1.3 ppm cleanup objective;
- **Surface Water:** to monitor dissolved mercury concentrations over time and;
- **Fish:** to monitor mercury bioaccumulation in biota over time.

4.7.1 Downstream Sediment Sampling

Two sediment samples will be taken in the unnamed tributary, downstream of the sediment delineation area discussed in Section 4.3, at the RI sample locations SD-04 and SD-05 (locations MR-SD-06 and MR-SD-07 in Figure 4). Two sediment samples will also be collected from Patroon Creek, at RI sample locations SD-07 (just downstream from the confluence with the unnamed Tributary) and SD-08 (locations MR-SD-08 and MR-SD-09 in Figure 4). Two sediment samples will be taken from the I-90 pond as well, one at RI sample location SD-10 and one at RI sample location SD-11 (locations MR-SD-10 and MR-SD-11 in Figure 4). Sampling will be completed to a depth of approximately six inches below the sediment surface. Sediment samples will be collected in a "downstream" to "upstream" direction (i.e., in a direction opposite the flow), to minimize the chance of spreading disturbed sediment to unsampled locations.

Sediment sampling will be completed using the methodology discussed in Section 4.3. The sediment samples will be analyzed for mercury by USEPA Method SW-846 7471A, methyl mercury by USEPA Method 1630, Total Organic Carbon (TOC) by the Lloyd-Khan Method and particle size by ASTM D422-63.

4.7.2 Surface Water Sampling

Surface water samples will be collected from the unnamed Tributary, Patroon Creek and the I-90 Pond. One sample will be collected from each water body, at RI sample locations SW-05, SW-08 and SW-10 (locations MR-SW-1, MR-SW-2 and MR-SW-3, as shown on Figure 4). The following procedure will be used to collect surface water directly from the water bodies in sample containers provided by the project laboratory:

- Don a clean pair of latex gloves.
- Estimate sampling depth by visual observation (for shallow samples) or measure depth using a weighted, flexible measuring tape or a rigid gage.
- Invert the laboratory-supplied sample container (without preservatives), insert the sample container into the water to the desired level, and then turn the mouth of the sample container up and towards the upstream direction thus allowing the container to fill.
- Cap sample container while container is still underwater, if possible.
- Remove sample container from water body and cap if not already capped.
- Rinse the exterior of the sample container thoroughly with deionized water and label container.
- Add preservatives and check for appropriate pH.
- Record all appropriate data (including sampling location, sampling depth, time of sampling, and description of sample) in field logbook or the Surface Water Sampling Log.

Surface water samples will be analyzed for mercury by USEPA Method SW-846 7471A, methyl mercury by USEPA Method 1630, alkalinity by USEPA Method 310.2, hardness by USEPA Method 130.2 and Total Dissolved Solids (TDS) by USEPA Method 160.1 and SM 2540C.

4.7.3 Fish Tissue Sampling

Fish tissue samples will be collected from the unnamed Tributary, Patroon Creek and from the I-90 Pond. One composite sample will be taken from each of the three water bodies (locations MR-FT-08, MR-FT-09, and MR-FT-10, as shown in Figure 4). These sample locations are co-located with the surface water and sediment sample locations discussed above. Prior to sampling, a determination of the final sampling method will be made. This determination will be made based on field conditions. Anticipated methods may include netting, seining, minnow traps, electroshocking, or other method as determined by field staff and approved by the oversight agency.

Prior to sampling, standard water quality measurements will be made at each sampling location. A habitat evaluation sheet, which identifies physical and biological features of each habitat, will also be completed for each location. These data sheets record the field variables which documents habitat features for later comparison of species composition, abundance, and general health. During the fish sampling, for each individual fish, the following parameters will be noted:

- Waterbody/location/depth or position in waterbody
- Species
- Length, in mm, measured from snout to lower part of tail
- Weight, in gram
- Sex and relative age (juveniles/adult)
- General appearance, special attention will be given to physical malformations

Fish collected for laboratory analysis will preserved in the field as directed by the contract laboratory. As per the QAPP Worksheet #19, fish samples will be kept at 4°C. A field preservative such as formaldehyde or

alcohol will be used to preserve samples. Whole bodies of specimen fish will be included in the sample. All other sampling protocols will be coordinated with the contracted laboratory prior to mobilization to the field location. Once collected, fish samples will be shipped to the laboratory overnight. All fish tissue samples will be analyzed for mercury by USEPA Method SW-846 7471A, percent lipid and percent solid.

4.8 Survey

Prior to field mobilization, the perimeter, and boring locations will be staked in the field by a licensed New York land surveyor and the horizontal and vertical position (elevation msl and spatial coordinates) recorded as discussed in Section 4. Then, following completion of the field activities, the "as built" locations will be re-surveyed for those locations that were adjusted from the staked location. The survey will also include topographic and property boundary lines for the potential remediation areas addressed in the ROD. Survey accuracy will be ±0.01 feet vertically and ±0.1 feet horizontally.

4.9 Investigation-Derived Waste Management

Investigation-derived waste (IDW) generated from field activities will be containerized in labeled 55-gallon DOT-approved steel drums and staged at a pre-designated location on the MERECO property for characterization and disposal. Information contained on the label will include the drum contents, name, address and telephone number of generator, date(s) the material was placed in the drum, and a BC contact name/telephone number. Wastes will be separated based on type. For example, separate drums will be filled for contaminated soil and/or sediment, monitoring well development and purge water, decontamination wastewater, used personal protective equipment (PPE), and general trash. If a sufficient quantity of general trash is expected, then a dumpster or rolloff might be staged for this material instead of drums.

For liquid wastes, characterization of the drummed IDW will consist of collecting a composite sample from drums of similar contents and sending the sample to the analytical laboratory to be analyzed for the parameters required by the designated waste receiving facility. Characterization sampling will occur as soon as possible following field activities to ensure compliance with all local, state and federal regulations regarding storage of IDW.

IDW will be disposed in accordance with applicable Federal, State, and Local regulations.

4.10 Decontamination Procedures

All down-hole drilling equipment (e.g., augers, rods, etc.) will be decontaminated before beginning drilling activities at the site, and after completion of each boring or monitoring well. Decontamination of the drilling equipment will be conducted over a decontamination pad using a high pressure steam cleaner. Rinsate accumulated in the decontamination pad will be pumped into DOT-approved 55-gallon steel drums pending waste characterization and appropriate off-site disposal.

Sampling equipment decontamination procedures will vary depending on the field task. The various levels of decontamination to be performed between sampling locations for the various types of field activities are described below.

- Level 1 (Geotechnical Sampling Equipment, Split-Spoons, Trowels, etc.)
  - If geotechnical sampling equipment has come in contact with elemental mercury, preliminary decontamination of the equipment will be conducted over a decontamination pad using a high pressure steam cleaner.
  - Wash/scrub with laboratory detergent/potable water; and
  - Potable water rinse.
- Level 2 (IP, Water Level Meter and Probes)
  - Rinse with laboratory detergent/distilled water solution; and
  - Rinse with distilled water.
- Level 3 (non-dedicated sampling equipment that comes in direct contact with the analytical sample media)
  - Wash/scrub with laboratory detergent/distilled water solution;
  - Distilled water rinse,
  - Laboratory-grade methanol rinse (if organic analyses are planned);
  - Distilled water rinse;
  - Laboratory-grade 10% nitric acid rinse; and
  - Final distilled water rinse.

The waste water generated from the decontamination procedures will be containerized and managed as described in Section 4.9.

5. SAMPLE CUSTODY AND DOCUMENTATION

Identification, documentation and strict custody of samples are important steps to maintain the integrity of the environmental samples. These topics are addressed in the SOPs and ASTM methodologies, and the RDWP. The subsections below and Worksheet Nos. 26 and 27 (Attachment A) address sample identification, packaging, shipping, and documentation. Procedures followed during the field investigation will be in accordance with the RDWP and are summarized in the following sections.

5.1 Sample Identification System

The method of identification of a sample depends on the type of measurement or analysis performed. When field screening measurements (e.g., pH, dissolved oxygen, or turbidity) are made, data are recorded directly in logbooks or on field investigation forms. Identifying information such as project name, station number, station location, date and time, name of sampler, field observations, remarks, or other pertinent information will be recorded.

Samples collected for laboratory analysis during the field investigation will be specifically designated for unique identification. Each sample will be designated by an alpha-numeric code which will identify the sampling location, type or as necessary depth.

Aqueous and solid samples collected as a part of the work will be assigned unique sample identifiers. The sample identifiers are required in order to identify and track each of the samples collected for analysis. Associated field QA/QC samples such as duplicates and field blanks will be further identified adding the date of collection to the sample name as shown below, and as needed a number will be added sequentially to distinguish the samples.

Each of the samples will be identified by a unique alpha-numeric code that indicates the particular sample type, location, and date. The format of the code is as follows:

Medium/Sample Type Code-Location Number

The three codes that make up the sample identifier are described as follows:

1. The Site name – MR (Mercury Refining Superfund Site);
2. The medium/sample type codes listed below:
   - MW - Groundwater sample taken from a monitoring well;
   - CB – Catch Basin sample;
   - SED – Sediment sample;
   - DW – Drummed waste sample;
   - W – Waste sample;
   - SB – Soil Boring sample;
   - S – Soil sample
   - SV – Soil Vapor sample

- FT – Fish Tissue sample;
- GT – Geotechnical sample
- FB – Field Blank sample;
- DUP – Duplicate sample; and
- MS/MSD – Matrix Spike/Matrix Spike Duplicate sample.

3. The location code will be keyed to the specific sample designation.

The following is an example of a sample identifier that will be used for samples collected for geotechnical laboratory analysis:

MR-SB-48B-10-12: Indicating that the soil sample was collected from the second boring (B) at soil boring location SB-48 from a depth of 10 to 12 feet below ground surface.

5.2 Sample Custody, Packaging, and Shipping

Sample custody must be strictly maintained and carefully documented each time the sample material is collected, transported, received, prepared, and analyzed. Custody procedures are necessary to ensure the integrity of the samples, and samples collected during the field investigation must be traceable from the time the samples are collected until they are disposed of and/or stored, and their derived data are used in the final report. Sample custody is defined as (1) being in the sampler's possession; (2) being in the sampler's view, after being in the sampler's possession; (3) being locked in a secured container, after being in the sampler's possession; and (4) being placed in a designated secure area. Sections 5.2.1, 5.2.2, and 5.2.3 document the on-site packaging and shipment procedures for sample custody in the field. The analytical and geotechnical laboratories will maintain custody after arrival of the samples through internal logging procedures, as indicated in Section 5.2.4.

5.2.1 Field Custody

Field custody procedures will be implemented for each sample collected. The field sampling team will be responsible for the care and custody of the samples until they are properly transferred or dispatched. To assure the integrity of the samples, the samples are to be maintained in a designated, secure area and/or custody sealed in the appropriate containers prior to shipment.

Each environmental sample will be properly identified and individually labeled. Labels will be filled out in indelible ink with at least the following information: field sample identification, date and time of sample collection, initials of sampler(s), analysis/test required, and preservation (as appropriate). The sample label will be securely attached to the sample container. In addition, an "up" arrow will be included on each Shelby tube so that the tube can be maintained in an upright position during storage and shipment.

Environmental samples being analyzed by the analytical laboratory will be properly packaged and shipped for analysis. Following labeling, the sample bottles will be enclosed in clear sealable plastic bags (e.g., zip-loc bags), through which the identifying label is visible.

The sample containers, now sealed in bags, will then be placed in a hard plastic cooler and voids filled with either ice or packaging material (e.g. bubble wrap). Samples will be packed with sufficient ice (enclosed in double-bagged sealable plastic bags) to cool the samples to 4±2°C. Additionally, each iced cooler will be packed with a cooler temperature blank. Lastly, the cooler will be filled with adequate cushioning material to minimize the possibility of container breakage during transportation.

Samples destined for the geotechnical laboratory will be secured in a cooler or box and transported to the laboratory.

A COC will be included with all sample transfers/shipments to the analytical or geotechnical laboratory. A sample COC form to be used for the geotechnical samples is included as Figure 5. TestAmerica Buffalo will provide the COC forms to be completed for the analytical samples.

5.2.2 Sample Containers and Preservatives

Different combinations of containers and preservation techniques are required for the various samples, in part due to specified maximum allowable sample holding times for certain analyses. The various required preservation methods, container types, and maximum sample holding times for the aqueous and solid samples are listed on Worksheet No. 19 (Attachment A). All samples destined for chemical analysis must be cooled to and maintained at 4 (±2) degrees Celsius from the time they are collected, forward.

Sample labels are required on sample containers for the primary purpose of sample identification. Specific field data need not be recorded on the labels as they will be recorded on field data sheets and/or in the field logbook. The sample labels will contain the following information:

- Sample identification (see Section 5.1);
- Depth of sample (if appropriate);
- Analysis/test to be performed;
- Preservative (if required);
- Project name and number;
- Date and time of sample collection; and
- Initials of Sampler

5.2.3 Sample Shipping Procedures

Shipment of samples to an analytical laboratory is usually required upon completion of sample collection, unless the laboratory can provide a courier. Packaging is necessary in order to protect the sample containers, to maintain the samples at a temperature of 4°C, and to comply with applicable transportation regulations.

In general, samples are shipped using packaging that is supplied by the analytical laboratory. The packaging normally includes a shippable insulated box such as an ice cooler and contains protective internal packaging materials such as foam sleeves. Some laboratories use proprietary sample packaging with integral internal packaging. In either case, ice will be used to maintain the temperature of the samples.

Regulations will be observed regarding the shipment of dangerous goods. Sample containers and certain field equipment may be defined as dangerous goods such that special requirements will be followed for their shipment. Air shipment of dangerous goods is regulated by the International Air Transport Association (IATA) as described in "Dangerous Goods Regulations" (IATA, current year). IATA Regulations are updated annually. Shipment by ground is regulated by the U.S. Department of Transportation (DOT; 49 CFR). Furthermore, individual shippers (e.g., Federal Express) or other countries (international shipments) may have additional requirements for dangerous goods shipment.

Environmental samples, (e.g., groundwater, soil, etc.) containing relatively low concentrations of contaminants, (regulated under 40 CFR) are currently exempt from Hazardous Goods regulations. 40 CFR 261.40(d) states, "A sample of solid waste or a sample of water, soil, or air which is collected for the sole purpose of testing to determine its characteristics or composition is not subject to this Part or Parts 262 through 267 or Part 124 of this chapter or to the notification requirements of Section 3010 of RCRA." Sample containers will be packed to avoid inadvertent breakage and/or spillage during shipment.

Environmental samples which are known to be or suspected to be toxic, corrosive, flammable, or those which emit a noxious or anesthetic annoyance or discomfort to passengers and/or flight crews when shipped by air, will be packed, labeled and shipped in accordance with current IATA regulations. Refer to "Dangerous Good Regulations" (current year), Section 3 - Classification.

Specific regulations exist (Shipment in Excepted Quantities) for the shipment of many reagents that are commonly used as preservatives and decontamination agents. Consequently, the shipment to the Site of "empty" sample containers containing small quantities of preservatives will be conducted in accordance with the regulations. The most significant limitations for the shipment of preservatives (IATA, current year) involve those for nitric acid in which only small quantities (<0.5L) of low concentration (<20 percent) nitric acid can be shipped in any given sample shipment.

If the analytical laboratory couriers the samples directly from the Site or the samples are being delivered directly to the laboratory by BC, the COC form will not be placed inside the cooler. The COC form must be signed by the receiver (e.g., the laboratory courier, or the laboratory sample custodian) when he/she accepts possession of the samples.

5.2.4 Laboratory Custody Procedures

Laboratory custody procedures are described in the laboratory SOPs presented in Attachment B.

5.3 Sample Documentation

The documentation generated for and associated with the field activities will be summarized (in tabulated form if possible) and placed in the project files.

5.3.1 Field Logbooks

The sampling team or any individual performing a particular field investigation activity (e.g., soil or groundwater sampling) will be required to maintain a bound, weatherproof field logbook. Each logbook will be controlled and assigned a unique sequential identification by the sampling personnel. At a minimum, daily entries into the field logbooks will include the date, personnel Site, the proposed activities, weather, start/stop times of activities (including arrival and departure times), visitor's names, community contacts, and other site-specific information determined by the sampling personnel to be noteworthy. Pertinent sampling information to be recorded in field logbooks includes information that is necessary to reconstruct the investigative/sampling operations. Documentation of sample activities in the field logbook will be completed immediately after sampling at the location of sample collection. Logbook entries will contain sample information, including sample number, collection time, location, descriptions, field measurements, and other site- or sample-specific observations. Difficulties with sample recovery and other field observations (e.g., staining, visible contamination, etc.) must be noted if encountered. Any field difficulties/problems, and deviations from the RDWP, QAPP and/or other Site plans (with justification) must also be included in the field logbook.

If photographs are taken as part of the documentation procedure, the name of the photographer, the date, the time, and a description of the photo (including direction and scale, if applicable) will be entered sequentially in the field logbook as the photographs are taken. Once downloaded, the photographs will be numbered in correspondence to the logbook numbers, and the above information will be placed in a photographic log filed with the photographs.

The field logbooks will have the name of the Site and project written on the cover and inside the cover. The date, page number and initials of the primary field note transcriber will be written atop each page during the day the entries are made. Corrections to the logbooks will consist of a single strike line through the incorrect entry, the new accurate information, the initials of the corrector, and the date of amendment. Any blank spaces/pages in the logbooks will be crossed out with a single strike mark and signed by the person making the notation.

5.3.2 Field Investigation Forms

In addition to field logbooks, field team members may use appropriate forms applicable to the field activities for groundwater sampling and soil vapor sampling. For example, during purging and sampling of the monitoring wells, a monitoring well data sheet may be completed for each well. The field sampling forms will include the following information:

- Sampling location;
- Date and time;
- Sample collection method;
- Sample description;
- Field meter calibration data; and
- General comments (weather conditions, etc.).

The field sampling form for groundwater will include the following additional information:

- Condition of the well;
- Static water level (depth to water);
- Depth to the bottom of the well;
- Calculated well volume;
- Purging method (if method appropriate);
- Field parameters measured during purging;
- Actual purged volume (if method appropriate);

The field sampling form for soil vapor sampling will include the following additional information:

- Name of the sampler;
- Location of the sample point;
- Helium leak detection percent result;
- Purge volume and time;
- Container ID;

- Flow controller ID;
- Start and end sampling date and time
- Vacuum pressure of container at start and end of sampling;
- Ambient air temperature and barometric pressure at start and end of sampling.

5.3.3 On-Site Screening Analysis Records

Field screening data (e.g., liquid level measurements, temperature, turbidity, etc.) will be reported by Site personnel in field logbooks and/or on field investigation forms associated with the sampling event. Documents and/or raw data generated during on-site field screening sample analyses will become part of the on-site field screening analyses record.

6. LABORATORY REQUIREMENTS AND PROCUREMENT OF LABORATORY SERVICES

6.1 Analytical Laboratory Services

The analytical laboratory program to be undertaken at the Site, including potential laboratory assignments, is summarized in Worksheet No. 23 (Attachment A). Sample collection and analytical protocol information, (which includes the following: sample matrix, number of samples, analytical parameter/group, analytical method(s), sample volume and container requirements, sample preservation, and sample holding times), are presented on Worksheet No. 19 in Attachment A. Quantitation limits for the analyses are provided on Worksheet No. 15 in Attachment A, while the analytical SOPs are listed on Worksheet No. 23 (Attachment A) and included in Attachment B. Prior to the sampling event, BC will coordinate with the analytical laboratory to schedule the delivery of sample containers and the analyses.

Results from the analyses are to be reported in standard units for the matrix and analyses (e.g., µg/L for groundwater and µg/Kg for soil). Worksheet No. 30 (Attachment A) identifies the laboratory providing analytical services. It is anticipated that TestAmerica Buffalo, located in Amherst, New York will be subcontracted by BC as the primary analytical laboratory for this project; however, TestAmerica North Canton will be used for methyl mercury and fish tissue analyses. TestAmerica Burlington will also be used for selected analyses (see UFP Worksheets, Attachment A), and Frontier GeoSciences perform analysis of the soil vapor samples.

6.2 Geotechnical Laboratory Services

The geotechnical laboratory program to be undertaken at the Site, including potential laboratory assignments, is summarized in Worksheet No. 23 in Attachment A. Sample collection and analytical protocol information, (which includes the following: sample matrix, number of samples, geotechnical test/method procedure, sample volume and container requirements), are presented on Worksheet No. 19 in Attachment A. The geotechnical SOPs/ASTM methods are listed on Worksheet No. 23 in Attachment A and included in Attachment C. Prior to the sampling event, BC will coordinate with the geotechnical laboratory to schedule to verify the required sample containers, sample volumes and the test methods.

Results from the geotechnical tests will be reported in the appropriate units identified in the SOPs/ASTM methodology. Worksheet No. 30 (Attachment A) identifies the laboratory providing geotechnical testing services. It is anticipated that GeoTesting Express, located in Boxborough, MA will be subcontracted by BC as the geotechnical testing laboratory for this project.

7. ANALYTICAL AND GEOTECHNICAL DATA HANDLING, REVIEW, AND REPORT

Standard methods and references will be used as guidelines for data handling, reduction, review, and reporting. Data for the project will be compiled and summarized with an independent verification at each step in the process to prevent transcription/typographical errors. Any computerized entry of data will also undergo verification review. Worksheet No. 29 (Attachment A) lists the documents and records that will be generated during the project. In addition to the following subsections, data verification, verification and usability assessment procedures for the project are also summarized in Worksheet Nos. 34 through No. 37 in Attachment A.

7.1 Data Reduction

The following sections define how field, laboratory, and project data will be reduced, summarized and tabulated.

7.1.1 Field Data Reduction

Field instrumentation data (e.g., temperature, pH, etc.) will be reported by Site personnel in field logbooks and/or on field investigation forms associated with the sampling event. At the end of the field investigation, the field screening data results will be summarized in the Site's computerized database and/or in tabulated form, as warranted.

7.1.2 Analytical Laboratory Data Reduction

The analytical laboratory will tabulate and compile analytical results and associated QA/QC information. Data generated by the laboratory will be reported in a specified format containing the required elements to confirm DQO compliance and allow for upload to the project database. Analytical results will be presented on a reduced summary form which will include the dates the samples were received and analyzed, and the analytical methods used. Laboratory QA/QC information required by the method protocols will be compiled, including the application of data QA/QC qualifiers as appropriate. In addition, COC forms will be provided in the reduced laboratory summary data packages to confirm DQO compliance. Specifics on internal laboratory data reduction protocols and reporting are identified in the laboratory's SOPs presented in Attachment B.

For data management, the laboratory will use their in-house Laboratory Information Management Systems (LIMS). The entry of input data and calculations will be checked, and the initials of the individual entering the data and the reviewer(s) will accompany all data transfers. Calculations to be performed typically include the following:

- Coefficients of variation for replicate samples;
- Spiked sample recoveries;
- Standard reference sample concentrations; and
- Environmental sample concentrations.

7.1.3 Geotechnical Laboratory Data Reduction

The geotechnical laboratory will tabulate and compile testing results and associated QA/QC information. Data generated by the laboratory will be reported in a specified format containing the required elements to confirm DQO compliance. Laboratory QA/QC information required by the ASTM method protocols will be compiled. Specifics on internal laboratory data generation and reduction protocols and reporting are identified in the laboratory's SOPs presented in Attachment C.

7.1.4 Project Database

A relational Environmental Data Management System (EDMS) database will be utilized to provide data entry, secure storage, access, and evaluation capabilities of data obtained as part of the RI. Laboratory data collected will be obtained as electronic data deliverables (EDDs) in a specific format provided to the laboratory. The EDDs will be imported directly into the database and will be checked against conventional laboratory reports. In addition, survey coordinate data and certain sample descriptive data will also be incorporated into the database. The database will reside on a secure computer server and will utilize Microsoft SQL Server® software with a Microsoft Access® user interface. Queries from the database will provide data output used in the preparation of data tables and graphs. In addition, the database is fully integrated with the geographic information system (GIS). Full laboratory data deliverable packages will also be obtained in electronic form in indexed PDF files.

7.1.5 Project Data Reduction

Following receipt of the laboratory reports by BC, the results will be compiled in the database for the project. Queries will be sued to extract relevant results for tabular reporting. Additional information on project data reporting requirements is provided in Section 7.3.

7.2 Data Review

7.2.1 Methodology

A comprehensive, qualitative data review will be performed on each of the laboratory results to verify that information generated relative to a given sample is complete and accurate. The data review will be consistent with the information outlined in Worksheet Nos. 34, 35, and 36 in Attachment A. Data validation will be streamlined by using the data results from the laboratory QC summaries and project data quality requirements, including measurement performance criteria for the data quality indicators, as specified in QAPP Worksheet Nos. 11, 12, 19, and 28.

The criteria (limits) used for data verification will be consistent with those listed on Worksheet No. 12 in Attachment A. To accomplish the data verification process, the system completes the following steps:

- Step 1: Completeness
  - **Field Sample Completeness** - Determine if field sampling was complete and was performed correctly.
  - **Field Method Deviations** – Determine potential impacts from noted/approved deviations, in regard to PQOs.

- **Field Documentation Completeness** – Determine if the field documentation and COC forms are complete.
- **Laboratory Completeness** – Determine if laboratory analysis/testing and reporting is complete and utilized the correct methods.
- **Laboratory Method Deviations** – Determine potential impacts from noted/approved deviations, in regard to PQOs.
- **Database Completeness** – Determine that the computer relational database is complete and correct.

- Step 2: Contamination (Analytical Samples Only)
  - **Method Blank Evaluation** – Determine if the source of positive results in the field sample is attributable to laboratory processing.
  - **Field Blank Evaluation** – Determine if the source of positive results in the field sample detection is attributable to field processing.
- Step 3: Holding Times (Analytical Samples Only)
  - **Holding Time Evaluation** – Check whether holding times meet, slightly exceed, or grossly
- Step 4: Accuracy (Analytical Samples Only)
  - **MS/MSD Evaluation** – Spiked field sample recoveries for the MS/MSD are compared to the acceptance criteria range.
  - **LCS** – Spiked compound recoveries are compared to the acceptance criteria range.
  - **Surrogate Evaluation** – Surrogate recoveries are compared to the acceptance criteria ranges.
- Step 5: Precision (Analytical Samples Only)
  - **Laboratory Duplicate Evaluation** – The relative percent differences between a field sample and its laboratory duplicate (if performed) are compared to the acceptance criteria.
  - **Field Duplicate Evaluation** – Check whether the precision between a field sample and its field duplicate meet project criteria.
- Step 6: Representativeness (Analytical Samples Only)
  - **Historic Data Review** – Determine if sample is consistent with historic data within the context of the anticipated natural variability of groundwater quality.
- Step 7: Sensitivity(Analytical Samples Only)
  - **Detection Limits** - Determine if reported laboratory detection limits meet the project performance criteria.

7.2.2 Data Verification Summary for Analytical Sample Results

A summary report detailing the out-of-control criteria and the associated sample data that are qualified will be generated at the end of the data verification process. The following evaluation procedures account for potential data verification out-of-criteria situations:

- Samples analyzed outside of holding time criteria will be rejected in the event of a gross exceedance;
- Samples with surrogate recoveries greater than or less than the project acceptance criteria ranges will have values greater than the sample reporting limit qualified as estimated;
- Samples with surrogate recoveries below the project control limits but greater than or equal to 10% will have all non-detected values qualified as estimated;

- LCS samples with recoveries outside of criteria will have all samples in the same preparation batch qualified following the same rules as for surrogates;
- Samples for organic analysis with MS recoveries outside of project control limits will have the specific out-of-criteria compound result(s) in the associated unspiked sample qualified; and
- Field duplicate analytes with out-of-criteria RPDs will have the analyte values greater than the sample reporting limit estimated in only the field duplicate and its associated sample.

7.2.3 Reconciliation with Data Quality Objectives

BC's QA Officer, in conjunction with the Project Manager, will determine whether field and analytical/geotechnical data or data sets meet the requirements necessary for decision making. The results of measurements will be compared to the DQO requirements set forth in this QAPP.

7.3 Data Reporting

Data will be reported directly by the analytical and geotechnical laboratories, and in the Remedial Design Report prepared by BC. The subsequent sections summarize how the data will be reported in each of these two formats.

7.3.1 Contents of Laboratory Data Reports

The laboratories will provide data reports in a reduced summary format, along with full NYSDEC Category B deliverables. The data packages will include:

- A copy of the chain-of-custody;
- Laboratory results summary (includes detection limits and dilution factors where applicable);
- Laboratory listing of sample preparation and analytical/testing methods;
- Laboratory compliance quality control summary (includes blank results, LCS, LSCD, MS/MSD, and surrogate results where applicable); and
- The hardcopy analytical laboratory report will include a written case narrative, which will note any problems encountered in receipt or during analysis of the samples, and the corrective actions utilized.

7.3.2 Data Presentation in the Remedial Design Report

A list of report submittals and a schedule of proposed delivery dates are provided in Worksheet Nos. 33 and No. 16 in Attachment A, respectively. BC's Project Manager and QA Officer will review all laboratory reports prior to use to ensure compliance with project requirements.

The RD Report will include summaries of the analytical and geotechnical data generated during the RD investigation. Summary formats will include tabular and graphical, and presented spatially on figures as appropriate. A narrative discussion of the data sets will be included that will include discussion of sampling procedures, QA/QC procedures, data quality and data usability. Appendices to the RD Report will contain laboratory data/results reports, completed field forms, and waste disposal manifests as appropriate.

8. QUALITY ASSURANCE/QUALITY CONTROL SAMPLE REQUIREMENTS

This section discusses the type and quantities of QA/QC samples to be utilized for chemical sampling during implementation of the field program. These samples only pertain to the analytical samples, and not the geotechnical samples.

8.1 Field Quality Control Samples

The subsections below present general information and guidance on field QC samples, including definition and frequency of QC blanks. Worksheet No. 20 (Attachment A) provides a summary of the required field QC samples. Field QC samples will be labeled and shipped according to the procedures outlined in Section 5. Field QC samples will not be collected for waste characterization sampling or for resamples to confirm low-level parameter detections.

8.1.1 Field Environmental Duplicate Samples

Duplicate environmental samples may be analyzed to evaluate the reproducibility (precision) of the sampling procedures. Duplicate samples, when utilized, will be collected at a rate of one duplicate for every 20 samples per sample matrix. The duplicate samples will be collected concurrently from the same location as the original environmental sample. The original and duplicate samples will be a pair of co-located samples that are obtained and prepared or homogenized separately. The duplicated sample will be "coded" such that the laboratory will be unable to determine the original field sample that was duplicated. An explanation of the duplicate "coding" will be documented in the field logbook and the appropriate field sampling forms.

8.1.2 Field Blanks

A field blank will be collected for non-disposable equipment to evaluate the potential for residual chemical contamination of environmental samples from inadequate decontamination of field equipment. Field blanks will be collected by pouring distilled, deionized (DI) water over and/or through decontaminated equipment and collecting the rinsate in the appropriate sample container(s). Field blanks will be collected at a frequency of one per 20 environmental samples per matrix. Analysis of field blanks will be identical to analysis of the associated environmental samples, and the blanks will be preserved as indicated in the applicable methods. Shipment of field blanks will occur with the associated environmental samples.

8.1.3 Cooler Temperature Blanks

A cooler temperature blank will be included in each cooler of samples shipped from the Site to verify that the cooler temperature has been maintained at 4°C (±2°C). The temperature blanks will be provided by the laboratory and will consist of a sample container filled with either potable or DI water, unpreserved, and labeled as a temperature blank. The laboratory will record the temperature of the blank water on the COC form immediately upon cooler receipt by the laboratory.

8.2 Laboratory Quality Control Samples

General information and guidance on laboratory QC samples are presented in the subsections below. A summary of QC procedures, frequencies, criteria, and corrective actions for the samples, as determined by the applicable method guidelines, is provided in Worksheet No. 28 (Attachment A). More detailed information of these quality control samples is presented in Attachment B (analytical laboratory Quality Assurance Manual and SOPs) and Attachment C (geotechnical laboratory Quality Assurance Manual and ASTM Standards). The following laboratory quality control samples only apply to the analytical laboratory where chemical analysis of samples will be performed.

8.2.1 Method Blanks

A method blank, also known as a preparation blank or a laboratory reagent blank, will be analyzed with every batch of samples (i.e., up to 20 environmental samples) to ensure that contamination has not occurred during the analytical process. Method blanks consist of a portion of analyte-free water or solid that is processed through the entire analytical procedure the same as the corresponding batch of environmental samples.

8.2.2 Matrix Spike/Matrix Spike Duplicates

Matrix spike/matrix spike duplicate (MS/MSD) samples (also known as spike/duplicate samples or laboratory fortified samples) may be used to assess precision and accuracy of the analytical methods. In this procedure, additional aliquots of an actual field sample are collected at a specific location, and two aliquots are "spiked" by the addition of known amounts of an analyte or analytes. These samples are then analyzed identically to the environmental samples. A comparison of the resulting concentration(s) to the original sample concentration, and among the two "spike" sample concentrations, provides information on the ability of the analytical procedure to generate a correct result from the sample. MS/MSD samples may be collected in the field at a rate of [five percent], and will be analyzed on a per batch basis, with up to 20 environmental samples constituting a batch. The validity of MS/MSD %R and RPD values will be determined using the acceptance criteria stated in Worksheet No. 28 (Attachment A).

8.2.3 Laboratory Control Samples

A laboratory control sample (LCS) consists of an analyte-free water or solid phase sample that is spiked with target analytes at a known concentration. A LCS will be analyzed for every batch of samples (i.e., less than or equal to 20 samples) to provide information on the accuracy of the analytical methods and on the laboratory's performance. LCS samples must be prepared from a stock solution different than the one used to prepare the calibration standards. The percent recoveries for the LCS compounds will be compared to QC limits stated in the appropriate methods, and are presented in Worksheet No. 28 in Attachment A.

8.2.4 Laboratory Duplicate Samples

A laboratory duplicate sample will be prepared and analyzed for each batch of samples of similar matrix. These samples serve to demonstrate acceptable method precision (calculated through RPD values) by the laboratory. The RPD values must be within acceptable QC limits as per Worksheet No. 28 (Attachment A) and the appropriate methodology.

8.2.5 Interference Check Samples

An interference check sample (ICS), which contains target analytes at known concentrations, verifies the laboratory's inter-element and background correction factors. Analysis of ICS samples is unique to metals analysis using the inductively coupled plasma (ICP) method.

9. INSTRUMENT CALIBRATION AND PREVENTIVE MAINTENANCE

9.1 Instrument Calibration

This section describes the requirements for control, calibration and adjustment (if necessary) of instrumentation (further details are provided in Worksheet Nos. 22 and 24 in Attachment A). Instruments will be calibrated and adjusted (if warranted) at specified, predetermined intervals using known, recognized standards. All instruments will be calibrated in accordance with manufacturer's instructions.

9.1.1 Field Instrumentation

Sampling personnel will be responsible for maintenance and calibration of equipment while it is in use in the field. Equipment will be calibrated at least daily according to the manufacturer owner manuals. Information to be recorded includes the following (as applicable):

- Name of device/instrument calibrated, including instrument serial/identification number (if known);
- Manufacturer;
- Date of calibration;
- Standard(s) used during calibration (applicable calibration standards will be traceable to national standards);
- Procedure of calibration;
- Adjustments made (if any);
- Final settings of instrument/device;
- Signature of calibration operator; and
- Additional Comments (if necessary).

Equipment found to be out of calibration will be recalibrated. When instrumentation is found to be out of calibration or damaged, or if the instrument is consistently out of calibration, it will be repaired or replaced.

9.1.2 Analytical Laboratory Instrumentation

Personnel at the analytical laboratory will be responsible for ensuring that analytical instrumentation are of the proper range, type and accuracy for the test being performed, and that all of the equipment are calibrated at their required frequencies, according to specific protocols/procedures. At a minimum, calibration is required: (1) when an analytical method is first set up; (2) prior to the analysis of any batch of samples; (3) when the instrument detector has been subject to major maintenance; or (4) when the instrument fails the calibration QA/QC checks (see Worksheet No. 24 in Attachment A).

Laboratory equipment will be calibrated using certified/nationally recognized standards and according to the applicable methodologies and the laboratory SOPs. Stock standards will be dated when received, and the preparation of all standard solutions will be documented in a standard preparation logbook. Information to

be recorded includes the standard prepared, the source and concentration of the standard, the standard lot number, the data prepared, and the initials of the preparer.

The methodologies/laboratory SOPs also specify the appropriate operations to follow during calibration or when any instrument is found to be out of calibration. Information on and frequency for laboratory QA/QC samples are presented in Section 8.2 and/or the specified analytical method procedures.

9.2 Preventive Maintenance

Worksheet Nos. 22 and 25 in Attachment A provide summary information on maintenance of field and laboratory instrumentation, respectively.

9.2.1 Field Instrumentation

Field equipment will be maintained at its proper functional status in accordance with the owner's manual specifications. A check of the equipment will be performed before field activities begin, and routine spare parts (e.g., batteries, connectors, etc.) and maintenance tools will be maintained on Site, to minimize equipment downtime during the field activities. Visual checks of the equipment will be conducted on a daily basis.

Routine preventive maintenance will be performed to assure proper operation of the equipment. Any maintenance performed on field equipment will be documented on instrument calibration and maintenance sheets or in the designated field logbook, and will be undertaken only by personnel who have the appropriate skills and/or training in the type of maintenance required (see Section 12). Information to be recorded includes (as applicable):

- Name of device/instrument repaired, including instrument serial/identification number (if known);
- Manufacturer;
- Date of maintenance;
- Reason for maintenance;
- Maintenance performed;
- Adjustments made (if any);
- Signature of repair operator; and
- Comments (if any).

9.2.2 Laboratory Instrumentation

To minimize the occurrence of instrument failure and other system malfunctions, a preventive maintenance program for laboratory instruments is implemented. The laboratories are responsible for the maintenance of their equipment, in accordance with manufacturers' specifications. Laboratory personnel will be responsible for ensuring that instrumentation is functioning properly and within specific guidelines/specifications prior to starting any analysis or test. Maintenance, performed by either laboratory personnel for routine replacements or the manufacturer's service personnel for major instrumentation checks, will be conducted according to manufacturer's recommendations and procedures.

All maintenance performed on the laboratory instruments will be documented in maintenance logbooks. The date, initials of the person performing the maintenance, and the type of maintenance performed will be

recorded. In addition, receipts from major maintenance performed by the manufacturer's service personnel will be kept by the laboratory.

10. SUPPLIES AND CONSUMABLES

Supplies and consumables necessary for the field investigation will be obtained through appropriate commercial markets and will meet any supply-specific requirements outlined in the project documents (e.g., QAPP, RDWP, HASP, etc.). Supplies and consumables will be inspected by field personnel prior to use. Any supplies/consumables that do not meet requirements will be discarded or returned to the supplier.

Supply-specific requirements include the following:

- Containers utilized for analytical samples will be supplied by the analytical laboratory performing the analyses;
- The field QA/QC sample water will be DI water that is certified to be contaminant-free, and provided by the laboratory;
- Decontamination chemical supplies will be of ultra pure laboratory grade (nitric acid) and pesticide grade (methanol) or better; and
- Field screening instrumentation supplies will be of procedural- and/or manufacturer-specific grade.

Supplies and consumables will be stored, as necessary, in a designated area on the Site or in a BC office. The storage area will be protected from adverse conditions (e.g., weather, heat, etc.) to protect the supplies/consumables from possible outside contamination and breakage.

During the "readiness review" (see Section 11.1) and throughout the field investigation, the sampling personnel will be responsible for accountability for contractor-owned and/or -controlled property on the Site. The field personnel will properly obtain, secure, maintained, operate, and decontaminate equipment. The field personnel will also maintain an inventory of consumable supplies on-site, control access to them, and will ensure that supplies are stored properly and used only for their intended purpose. Supplies will be purchased in quantities that can be consumed within 30 days, and will not be "stock-piled" at the Site.

11. PROJECT ASSESSMENTS

The following section contains information on the various types of project assessments, which is also indicated in Worksheet Nos. 31 and 32 in Attachment A.

11.1 Project Readiness Audit

BC's PM and/or QA Officer may conduct a "readiness audit" for field activities, prior to the commencement of the investigation. Equipment and supplies will be inventoried, and field instrumentation will be checked to determine they are in working order. Maintenance activities performed during the "readiness audit" are to be documented and maintained in the project file and referenced in the designated field logbook.

11.2 Surveillances

Surveillance of field activities may be conducted with oversight personnel from USEPA and/or BC's PM and/or QA Officer. The surveillance may be conducted either as an announced or an unannounced visit to the Site. Surveillance notes obtained by BC personnel will be kept in the project file and referenced in the designated field logbook.

12. TRAINING OF PROJECT STAFF

Performance monitoring and investigation techniques training will be provided to the project staff. Training requirements are discussed in the subsections below, and are summarized on Worksheet No. 8 in Attachment A.

12.1 General Personnel Training

Project staff will receive general training on the project objectives, PQO(s) for the Site, USEPA requirements, the RDWP, the HASP, and this QAPP.

12.2 Quality Assurance Training

Training will include topics related to QA, and will include, but not be limited to:

- QAPP elements, including project-specific QA requirements;
- Need for proper documentation and records maintenance;
- Responsibilities and authority of project personnel;
- Chain of command/communication;
- Handling and review of field, laboratory and non-direct measurement data;
- USEPA QA requirements; and
- Field and sampling procedures.

12.3 Technical Training

Personnel performing Site activities will receive training on their respective tasks. In general, training will be provided to accomplish:

- Initial proficiency;
- Maintain proficiency; and
- Adapt to changes in technology, methods, or job responsibilities.

The extent of training will be commensurate with the following objectives:

- Scope, complexity and nature of the activity to be performed; and
- Prior education, experience and proficiency of personnel.

Training will also be administered to the field personnel in the care and calibration of field instruments.

13. CORRECTIVE ACTION

Review and implementation of systems and procedures may result in recommendations for corrective action (see also Worksheet No. 32 in Attachment A). Deviations from the specified procedures within approved project plans due to unexpected site-specific conditions will warrant corrective action. All errors, deficiencies, or other problems will be brought to the immediate attention of the BC PM and the Group, and may, as required, be brought to the attention of the USEPA RPM.

Procedures have been established to ensure that conditions adverse to data quality are promptly investigated, evaluated and corrected. These procedures for review and implementation of a corrective action are as follows:

- Define the problem;
- Investigate the cause of the problem;
- Develop a corrective action to eliminate the problem, in consultation with the personnel who defined the problem and who will implement the corrective action;
- Obtain required approvals;
- Implement the corrective action;
- Verify that the corrective action has eliminated the problem; and
- Evaluate the effectiveness of the corrective action.

Field problems will be addressed directly to the Field Team Leader and, as necessary, the Site Supervisor.

If problems occur with the laboratories or analyses/testing, the laboratory must immediately notify BC's PM or QA Officer by telephone and/or email. Consultation with appropriate personnel regarding appropriate actions would then follow.

All corrective action documentation (e.g., emails, telephone logs, etc.) will include an explanation of the problem and a proposed solution. Possible corrective action procedures include the following:

- Changing sampling methodology;
- Changing analytical methodology;
- Performing re-extractions/re-analyses;
- Performing a statistical analysis to determine confidence; and
- Performing re-sampling.

One-time changes to defined procedures will be documented in the field books and, if relevant, related reports that present the information. Should changes to the QAPP be required, the Site Supervisor will coordinate with the Project Manager and/or QA officer to implement the modifications.

14. QUALITY ASSURANCE REPORTS TO MANAGEMENT

Worksheet No. 33 contains information on QA reporting requirements. QA/QC issues will be reported by the analytical laboratory in each laboratory data delivery package.

15. REFERENCES

Brown and Caldwell Associates, 2009. Remedial Design Work Plan, Mercury Refining Superfund Site, Colonie, New York. December 2009.

IDQTF, 2005a. Uniform Federal Policy for Quality Assurance Project Plans, Evaluating, Assessing, and Documenting Environmental Data Collection and Use Programs, Part 1: UFP-QAPP Manual, Final, Version 1. Intergovernmental Data Quality Task Force. EPA-505-B-04-900A / DTIC ADA 427785. March 2005.

IDQTF, 2005b. Uniform Federal Policy for Quality Assurance Project Plans, Evaluating, Assessing, and Documenting Environmental Data Collection and Use Programs, Part 2A: UFP-QAPP Workbook, Final, Version 1. Intergovernmental Data Quality Task Force. EPA-505-B-04-900C / DTIC ADA 427486. March 2005.

USEPA, 2008. Record of Decision, Mercury Refining Site. Towns of Colonie and Guilderland, Albany County, New York. September 2008.

USEPA, 2008. Statement of Work – Remedial Design. Mercury Refining Superfund Site, Towns of Colonie and Guilderland, Albany County, New York. September 2008.

FIGURES

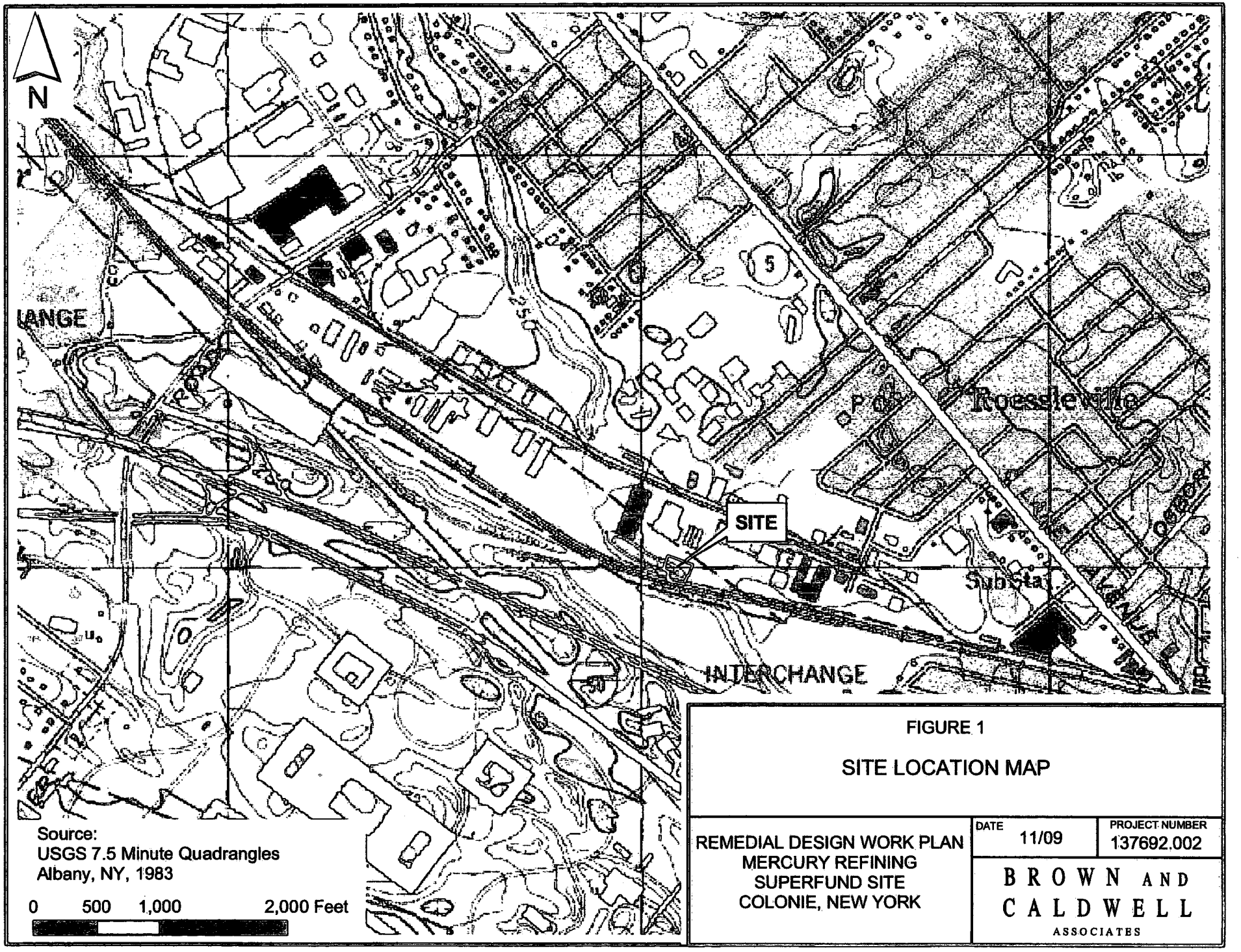

FIGURE 1

SITE LOCATION MAP

REMEDIAL DESIGN WORK PLAN
MERCURY REFINING
SUPERFUND SITE
COLONIE, NEW YORK

DATE	PROJECT NUMBER
11/09	137692.002

BROWN AND CALDWELL ASSOCIATES

P:\GIS\Mercury_Refining_Superfund\Site_Location.mxd

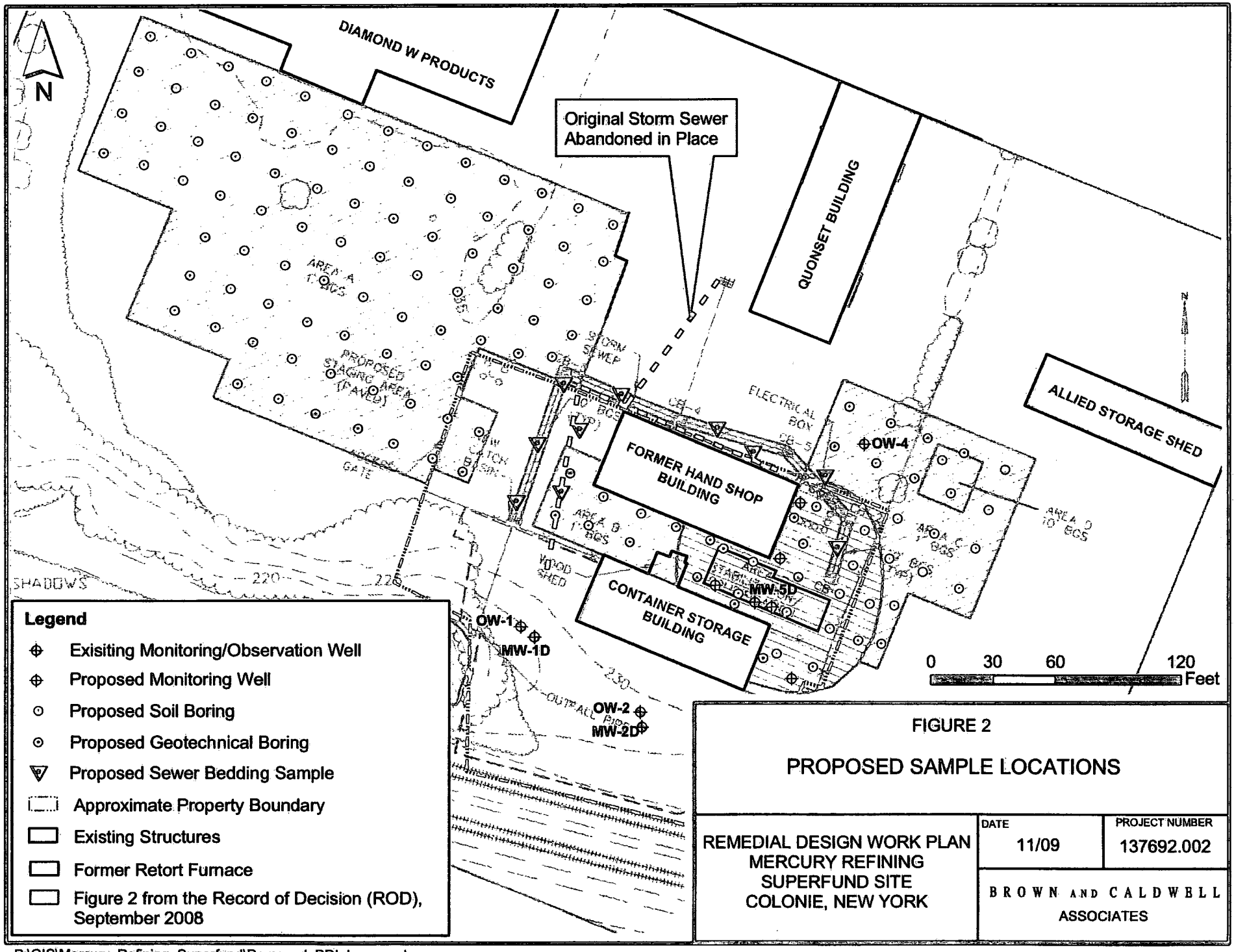

FIGURE 2

PROPOSED SAMPLE LOCATIONS

REMEDIAL DESIGN WORK PLAN
MERCURY REFINING
SUPERFUND SITE
COLONIE, NEW YORK

DATE	PROJECT NUMBER
11/09	137692.002

BROWN AND CALDWELL ASSOCIATES

P:\GIS\Mercury_Refining_Superfund\Proposed_PDI_Locs.mxd

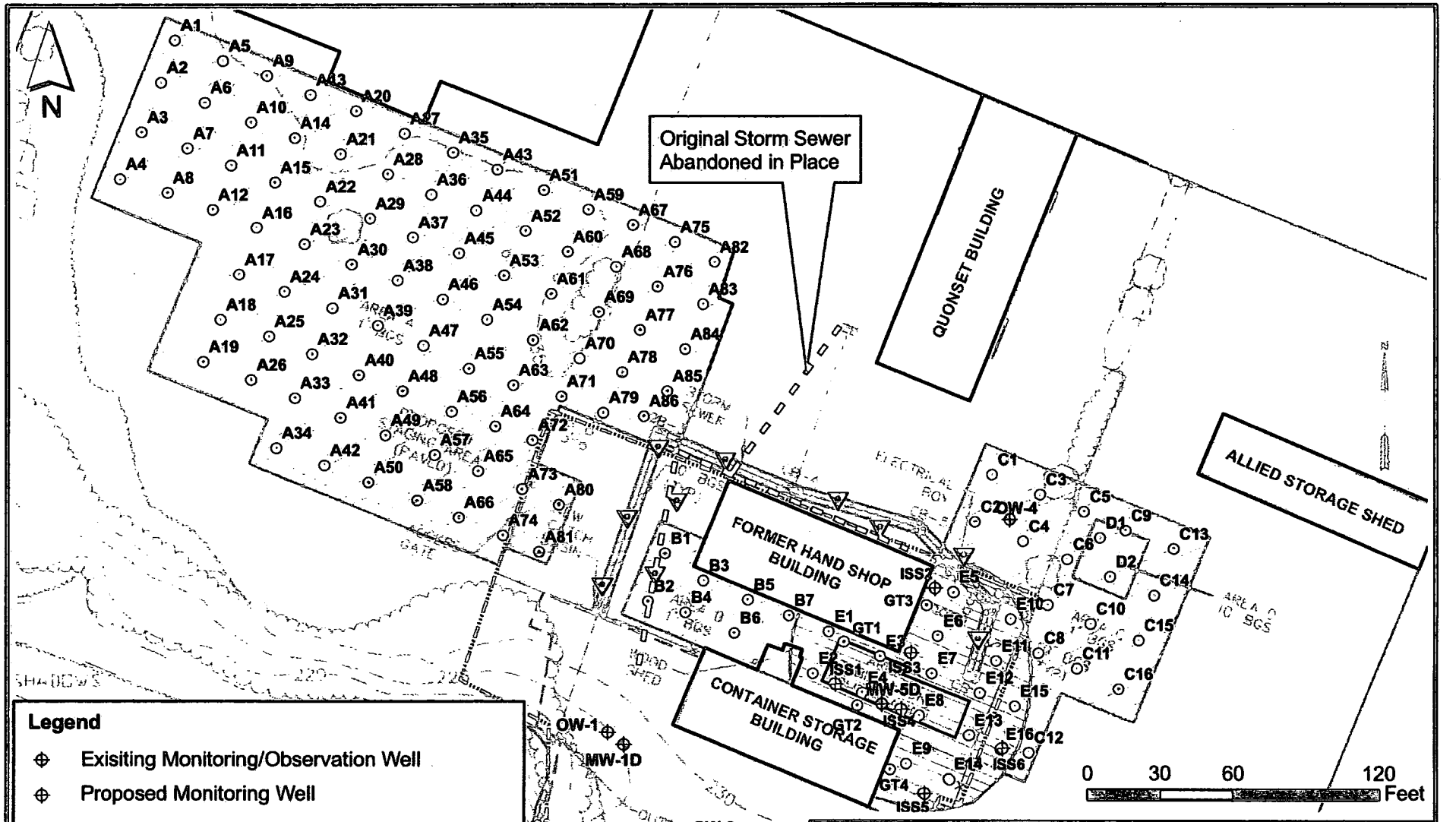

Legend

- Exisiting Monitoring/Observation Well
- Proposed Monitoring Well
- Proposed Soil Boring
- Proposed Geotechnical Boring
- Proposed Sewer Bedding Sample
- Approximate Property Boundary
- Existing Structures
- Former Retort Furnace
- Figure 2 from the Record of Decision (ROD), September 2008

FIGURE 2

PROPOSED SAMPLE LOCATIONS

REMEDIAL DESIGN WORK PLAN
MERCURY REFINING
SUPERFUND SITE
COLONIE, NEW YORK

DATE	PROJECT NUMBER
11/09	137692.002

BROWN AND CALDWELL ASSOCIATES

P:\GIS\Mercury_Refining_Superfund\Proposed_PDI_Locs._w_names.mxd

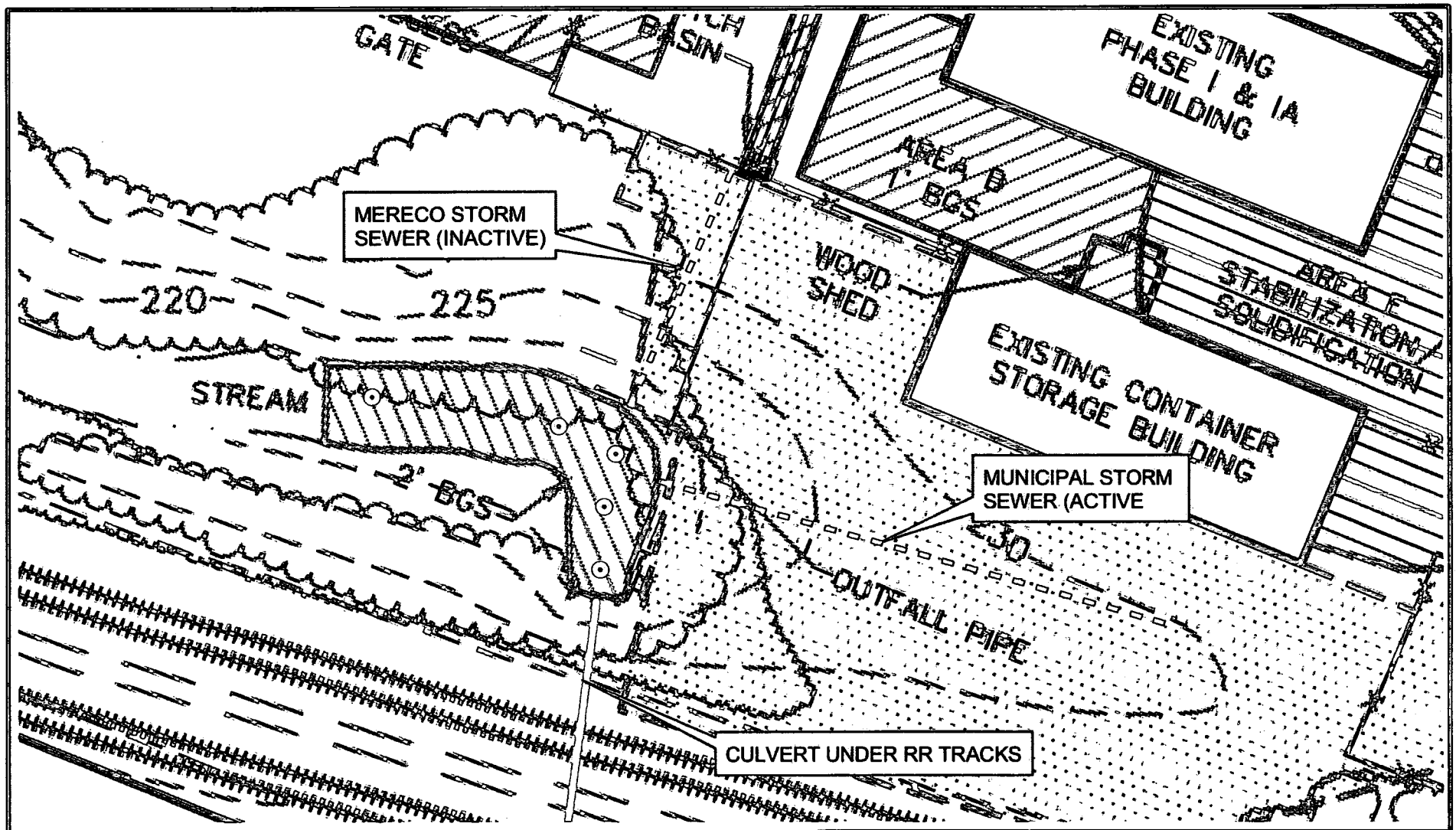

Legend

⊙ Proposed Sediment Sample

0 15 30 60 Feet

N

FIGURE 3

PROPOSED SEDIMENT SAMPLE LOCATIONS

REMEDIAL DESIGN WORK PLAN
MERCURY REFINING
SUPERFUND SITE
COLONIE, NEW YORK

DATE	PROJECT NUMBER
11/09	137692.002

BROWN AND CALDWELL ASSOCIATES

P:\GIS\Mercury_Refining_Superfund\Prop_Sediment_Samples.mxd

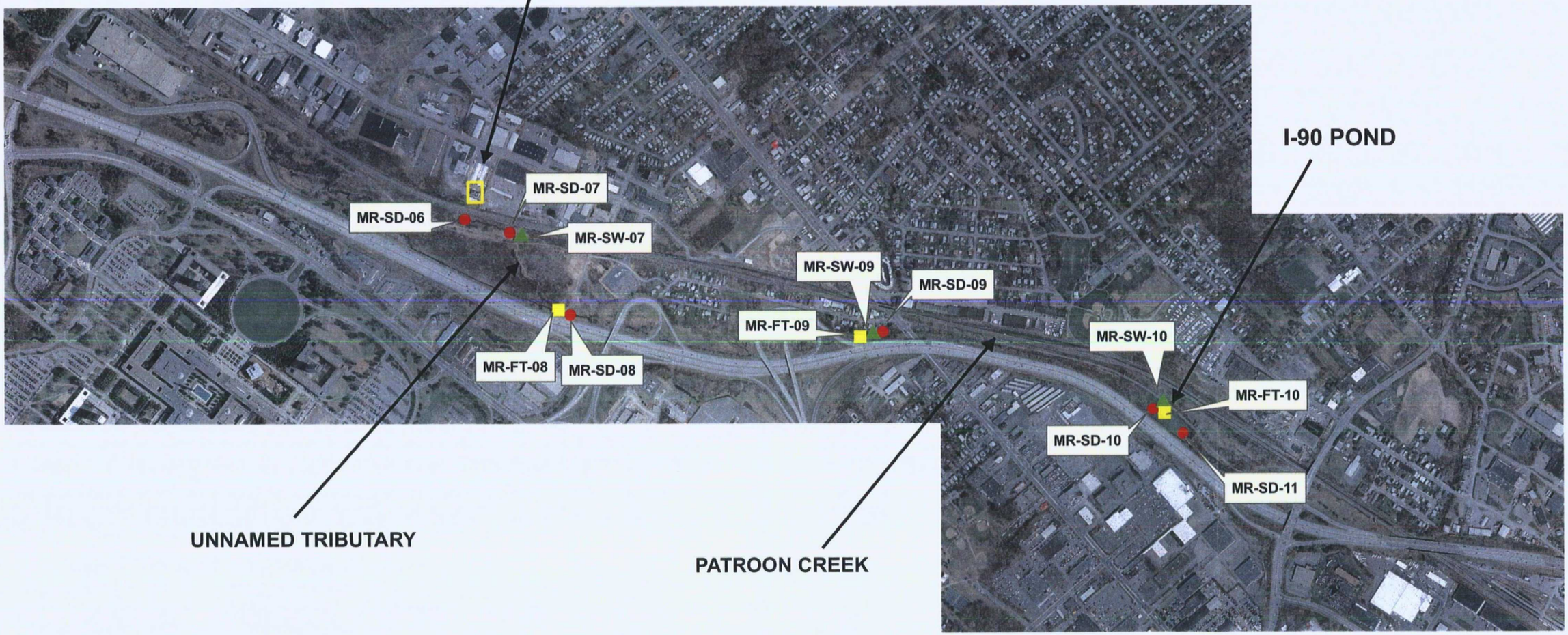

Legend:

- MR-SD-04 Sediment Sample
- MR-SW-04 Surface Water Sample
- MR-FT-01 Fish Tissue Sample

0 500 1,000 2,000 Feet

FIGURE 4

PROPOSED ECOLOGICAL SAMPLE LOCATIONS

REMEDIAL DESIGN WORK PLAN
MERCURY REFINING
SUPERFUND SITE
COLONIE, NEW YORK

DATE	PROJECT NUMBER
2/19/10	137692.002

BROWN AND CALDWELL ASSOCIATES

P:\GIS\Mercury_Refining_Superfund\Eco_Samples.mxd

137692.002

Chain of Custody Record

TestAmerica
THE LEADER IN ENVIRONMENTAL TESTING

TAL-4142 (0907)

Client	Project Manager	Date	Chain of Custody Number 388703
Address	Telephone Number (Area Code)/Fax Number	Lab Number	Page ____ of ____
City / State / Zip Code	Site Contact	Lab Contact	
Project Name and Location (State)	Contract/Mobile Number		
Contract/Purchase Order/Quote No.			

Analysis (Attach list if more space is needed)

Special Instructions/ Conditions of Receipt

Sample I.D. No. and Description (Containers for each sample may be combined on one line)	Date	Time	Matrix: Air	Aqueous	Sed.	Soil		Containers & Preservatives: Unpres.	HCl	HNO3	NaOH	H2SO4	Other	

Possible Hazard Identification
☐ Non-Hazard ☐ Flammable ☐ Skin Irritant ☐ Poison B ☐ Unknown

Sample Disposal
☐ Return To Client ☐ Disposal By Lab ☐ Archive For ____ Months (A fee may be assessed if samples are retained longer than 1 month)

Turn Around Time Required
☐ 24 Hours ☐ 48 Hours ☐ 7 Days ☐ 14 Days ☐ 21 Days ☐ Other ____

QC Requirements (Specify)

	Date	Time		Date	Time
1. Relinquished By			1. Received By		
2. Relinquished By			2. Received By		
3. Relinquished By			3. Received By		

Comments

DISTRIBUTION: WHITE - Returned to Client with Report; CANARY - Stays with the Sample; PINK - Field Copy

FIGURE 5

SAMPLE CHAIN OF CUSTODY FORM

Mercury Refining Superfund Site
Colonie, New York

BROWN AND CALDWELL

ATTACHMENT A

UFP – QAPP Worksheets

A-1 Résumés

A-2 Sampling SOPs

A-3 Field Forms

Intergovernmental Data Quality Task Force

Workbook for Uniform Federal Policy for Quality Assurance Project Plans

Evaluating, Assessing, and Documenting Environmental Data Collection and Use Programs

Part 2A: UFP-QAPP Workbook

This Workbook supplements Part 1 of the UFP-QAPP, the UFP-QAPP Manual. Proper completion of these worksheets requires knowledge of the QAPP elements explained in the Manual.

Final
Version 1
March 2005

TABLE OF CONTENTS

INTRODUCTION
QAPP Worksheet #1. Title and Approval Page 1
QAPP Worksheet #2. QAPP Identifying Information 2
QAPP Worksheet #3. Distribution List 6
QAPP Worksheet #4. Project Personnel Sign-Off Sheet 7
QAPP Worksheet #5. Project Organizational Chart 8
QAPP Worksheet #6. Communication Pathways 9
QAPP Worksheet #7. Personnel Responsibilities and Qualifications Table 10
QAPP Worksheet #8. Special Personnel Training Requirements Table 11
QAPP Worksheet #9. Project Scoping Session Participants Sheet 12
QAPP Worksheet #10. Problem Definition 13
QAPP Worksheet #11. Project Quality Objectives/Systematic Planning Process Statements 14
QAPP Worksheet #12. Measurement Performance Criteria Table 15
QAPP Worksheet #13. Secondary Data Criteria and Limitations Table 26
QAPP Worksheet #14. Summary of Project Tasks 27
QAPP Worksheet #15. Reference Limits and Evaluation Table 29
QAPP Worksheet #16. Project Schedule/Timeline Table 35
QAPP Worksheet #17. Sampling Design and Rationale 36
QAPP Worksheet #18. Sampling Locations and Methods/SOP Requirements Table 37
QAPP Worksheet #19. Analytical SOP Requirements Table 38
QAPP Worksheet #20. Field Quality Control Sample Summary Table 40
QAPP Worksheet #21. Project Sampling SOP Reference Table 41
QAPP Worksheet #22. Field Equipment Calibration, Maintenance, Testing, and Inspection Table 42
QAPP Worksheet #23. Analytical SOP Reference Table 43
QAPP Worksheet #24. Analytical Instrument Calibration Table 45
QAPP Worksheet #25. Analytical Instrument and Equipment Maintenance, Testing, and Inspection Table 48
QAPP Worksheet #26 Sample Handling System 49
QAPP Worksheet #27. Sample Custody Requirements 50
QAPP Worksheet #28. QC Samples Table 53
QAPP Worksheet #29. Project Documents and Records Table 55
QAPP Worksheet #30. Analytical Services Table 56
QAPP Worksheet #31. Planned Project Assessment Table 57
QAPP Worksheet #32. Assessment Findings and Response Actions 58
QAPP Worksheet #33. QA Management Reports Table 59
QAPP Worksheet #34. Sampling and Analysis Verification (Step I) Process Table 60
QAPP Worksheet #35. Sampling and Analysis Validation (Steps IIa and IIb) Process Table 61
QAPP Worksheet #36. Sampling and Analysis Validation (Steps IIa and IIb) Summary Table 62
QAPP Worksheet #37. Data Usability Assessment 63

QAPP Worksheet #1
(UFP-QAPP Manual Section 2.1)
Title and Approval Page

Quality Assurance Project Plan for the Mercury Refining Superfund Site Pre-Design Investigation
Document Title

United States Environmental Protection Agency, Region 2
Lead Organization

Frank Williams, Brown and Caldwell Associates
Preparer's Name and Organizational Affiliation

234 Hudson Avenue, Albany, NY 12210; (518) 472-1988; fwilliams@brwncald.com
Preparer's Address, Telephone Number, and E-mail Address

December 15, 2009
Preparation Date (Day/Month/Year)

Brown and Caldwell Project Manager: _____
Signature

_____Tamara L. Sorell, Brown and Caldwell, June 2010_____

Brown and Caldwell Project QA Officer: _____
Signature

_____Greg Cole, Brown and Caldwell, June 2010_____

USEPA Project Manager: _____
Signature

Thomas Taccone, USEPA, June 2010

Approval Signatures: _____
Signature

_____
Printed Name/Title/Date

_____
Approval Authority

Other Approval Signatures: _____
Signature

_____
Printed Name/Title/Date

Document Control Number: _____

QAPP Worksheet #2
(UFP-QAPP Manual Section 2.2.4)
QAPP Identifying Information

Site Name/Project Name: **Mercury Refining Site**
Site Location: **Colonie and Guilderland, New York**
Site Number/Code: **CERCLA-02-2009-2020**
Operable Unit:
Contractor Name: **Brown and Caldwell**
Contractor Number: **N/A**
Contract Title: **N/A**
Work Assignment Number: **N/A**

Title: **QAPP**
Revision Number:
Revision Date:
Page _3__ of ___

1. ***Identify guidance used to prepare QAPP:***
   Uniform Federal Policy for Implementing Quality Systems (EPA-505-F-03-001, Uniform Federal Policy for Quality Assurance Project Plans, Parts 1, 2, and 3 (EPA-505-B-04-900A, B, and C.

2. ***Identify regulatory program:***
   CERCLA, Record of Decision dated September 30, 2008

3. ***Identify approval entity:***
   United States Environmental Protection Agency, Region 2

4. ***Indicate whether the QAPP is a ~~generic~~ or a project-specific QAPP.*** **(circle one)**

5. ***List dates of scoping sessions that were held:***
   Meeting with USEPA on 12/4/08; not a formal scoping session.
   Internal Brown and Caldwell Remedial Design Team kick-off meeting October 8, 2009.

6. ***List dates and titles of QAPP documents written for previous site work, if applicable:***

Title	*Approval Date*
Final Quality Assurance Project Plan (CDM, 2001)	08/24/01

7. ***List organizational partners (stakeholders) and connection with lead organization:***

   USEPA is lead organization; stakeholders are the Mercury Refining Company Remedial Design Group (The Group), NYSDEC, NYSDOH, the Towns of Colonie and Guilderland, NRD Trustees (USF&WS, NOAA)

8. ***List data users:***
   Supervising Contractor (Brown and Caldwell), USEPA

9. ***If any required QAPP elements and required information are not applicable to the project, then circle the omitted QAPP elements and required information on the attached table. Provide an explanation for their exclusion below:***

Required QAPP Element(s) and Corresponding QAPP Section(s)	Required Information	Crosswalk to Related Documents
Project Management and Objectives		
2.1 Title and Approval Page	- Title and Approval Page	Worksheet No. 1
2.2 Document Format and Table of Contents 2.2.1 Document Control Format 2.2.2 Document Control Numbering System 2.2.3 Table of Contents 2.2.4 QAPP Identifying Information	- Table of Contents - QAPP Identifying Information	Worksheet Nos. 1,2
2.3 Distribution List and Project Personnel Sign-Off Sheet 2.3.1 Distribution List 2.3.2 Project Personnel Sign-Off Sheet	- Distribution List - Project Personnel Sign-Off Sheet	Worksheet No. 3 Worksheet No. 4
2.4 Project Organization 2.4.1 Project Organizational Chart 2.4.2 Communication Pathways 2.4.3 Personnel Responsibilities and Qualifications 2.4.4 Special Training Requirements and Certification	- Project Organizational Chart - Communication Pathways - Personnel Responsibilities and Qualifications Table - Special Personnel Training Requirements Table	Worksheet No. 5 Worksheet No. 6 Worksheet No. 7 Worksheet No. 8
2.5 Project Planning/Problem Definition 2.5.1 Project Planning (Scoping) 2.5.2 Problem Definition, Site History, and Background	- Project Planning Session Documentation (including Data Needs tables) - Project Scoping Session Participants Sheet - Problem Definition, Site History, and Background - Site Maps (historical and present)	Worksheet No. 9 Worksheet No. 9 Worksheet No. 10, Section 1.0 in QAPP Figure 1 in QAPP
2.6 Project Quality Objectives and Measurement Performance Criteria 2.6.1 Development of Project Quality Objectives Using the Systematic Planning Process 2.6.2 Measurement Performance Criteria	- Site-Specific PQOs - Measurement Performance Criteria Table	Worksheet No. 11 and Section 3.2 in QAPP Worksheet No. 12
2.7 Secondary Data Evaluation	- Sources of Secondary Data and Information - Secondary Data Criteria and Limitations Table	Worksheet No. 13 Worksheet No. 13
2.8 Project Overview and Schedule 2.8.1 Project Overview 2.8.2 Project Schedule	- Summary of Project Tasks - Reference Limits and Evaluation Table - Project Schedule/Timeline Table	Worksheet No. 14 Worksheet No. 15 Worksheet No. 16

Required QAPP Element(s) and Corresponding QAPP Section(s)	Required Information	Crosswalk to Related Documents
Measurement/Data Acquisition		
3.1 Sampling Tasks 3.1.1 Sampling Process Design and Rationale 3.1.2 Sampling Procedures and Requirements 3.1.2.1 Sampling Collection Procedures 3.1.2.2 Sample Containers, Volume, and Preservation 3.1.2.3 Equipment/Sample Containers Cleaning and Decontamination Procedures 3.1.2.4 Field Equipment Calibration, Maintenance, Testing, and Inspection Procedures 3.1.2.5 Supply Inspection and Acceptance Procedures 3.1.2.6 Field Documentation Procedures	- Sampling Design and Rationale - Sample Location Map - Sampling Locations and Methods/ SOP Requirements Table - Analytical Methods/SOP Requirements Table - Field Quality Control Sample Summary Table - Sampling SOPs - Project Sampling SOP References Table - Field Equipment Calibration, Maintenance, Testing, and Inspection Table	Worksheet No. 17 Figures 2, 3 and 4 Worksheet No. 18 Attachment A-3 Worksheet No. 23 Worksheet No. 20 Worksheet No. 18 Worksheet No. 20
3.2 Analytical Tasks 3.2.1 Analytical SOPs 3.2.2 Analytical Instrument Calibration Procedures 3.2.3 Analytical Instrument and Equipment Maintenance, Testing, and Inspection Procedures 3.2.4 Analytical Supply Inspection and Acceptance Procedures	- Analytical SOPs - Analytical SOP References Table - Analytical Instrument Calibration Table - Analytical Instrument and Equipment Maintenance, Testing, and Inspection Table	Attachment B to QAPP Worksheet No. 19 Worksheet No. 24 Worksheet No. 25
3.3 Sample Collection Documentation, Handling, Tracking, and Custody Procedures 3.3.1 Sample Collection Documentation 3.3.2 Sample Handling and Tracking System 3.3.3 Sample Custody	- Sample Collection Documentation Handling, Tracking, and Custody SOPs - Sample Container Identification - Sample Handling Flow Diagram - Example Chain-of-Custody Form and Seal	Worksheet No. 26 and Section 5.0 in QAPP Section 5.2.2 in QAPP Worksheet No. 26 and 27 and Section 5.2 in QAPP Figure 3 in QAPP
3.4 Quality Control Samples 3.4.1 Sampling Quality Control Samples 3.4.2 Analytical Quality Control Samples	- QC Samples Table - Screening/Confirmatory Analysis Decision Tree	Worksheet No. 20 Worksheet No. 28 Worksheet No. 28 and Sections 8.1 and 8.2 in QAPP

Required QAPP Element(s) and Corresponding QAPP Section(s)	Required Information	Crosswalk to Related Documents
3.5 Data Management Tasks 3.5.1 Project Documentation and Records 3.5.2 Data Package Deliverables 3.5.3 Data Reporting Formats 3.5.4 Data Handling and Management 3.5.5 Data Tracking and Control	- Project Documents and Records Table - Analytical Services Table - Data Management SOPs	Worksheet No. 29 Worksheet No. 20 Sections 3.2 and 7.0 in QAPP Sections 3.2 and 7.0 in QAPP Sections 3.2 and 7.0 in QAPP
Assessment/Oversight		
4.1 Assessments and Response Actions 4.1.1 Planned Assessments 4.1.2 Assessment Findings and Corrective Action Responses	- Assessments and Response Actions - Planned Project Assessments Table - Audit Checklists - Assessment Findings and Corrective Action Responses Table	Worksheet No. 31 Attachment A-3 Worksheet No. 32
4.2 QA Management Reports	- QA Management Reports Table	Worksheet No. 33 and Section 14.0 in QAPP
4.3 Final Project Report		
Data Review		
5.1 Overview		
5.2 Data Review Steps 5.2.1 Step I: Verification 5.2.2 Step II: Validation 5.2.2.1 Step IIa Validation Activities 5.2.2.2 Step IIb Validation Activities 5.2.3 Step III: Usability Assessment 5.2.3.1 Data Limitations and Actions from Usability Assessment 5.2.3.2 Activities	- Verification (Step I) Process Table - Validation (Steps IIa and IIb) Process Table - Validation (Steps IIa and IIb) Summary Table - Usability Assessment	Worksheet No. 34 Worksheet No. 35 Worksheet No. 36 Worksheet No. 37
5.3 Streamlining Data Review 5.3.1 Data Review Steps To Be Streamlined 5.3.2 Criteria for Streamlining Data Review 5.3.3 Amounts and Types of Data Appropriate for Streamlining		Section 7.2 in QAPP

Worksheet #3
Distribution List

QAPP Recipients	Title	Organization	Telephone Number	Fax Number	E-mail Address	Document Control Number
Tom Taccone	Remedial Project Manager	USEPA	212- 637-4281	212- 637-4284	Taccone.tom@epa.gov	
David Rosenblatt, Esq.	PRP Group's Project Representative	Mercury Refining Company Remedial Design Group	617-345-3330	617-345-3299	drosenblatt@burnslev.com	
Tamara Sorell	Managing Scientist (Overall Project Manager)	Brown and Caldwell	201-574-4700	201-236-1607	tsorell@brwncald.com	
Frank J. Williams, P.G.	Supervising Geologist (Site Coordinator))	Brown and Caldwell	518-472-1988	518-472-1986	fwilliams@brwncald.com	
Greg Cole	QA Officer (Senior Project Chemist)	Brown and Caldwell	916-853-5320	916- 635-8805	gcole@brwncald.com	
Peggy Gray-Erdmann	QA Manager	TestAmerica	716-504-9800	716-691-7991	Peggy.Gray-Erdmann@testamericainc.com	
Gary T. Torosian	QA Manager	GeoTesting Express	978-635-0424	978-635-0266	gtt@geotesting.com	
James Marolda	Senior Hydrogeologist (Field Team Leader)	Brown and Caldwell	201-574-4700	201-236-1607	jmarolda@brwncald.com	
Paul Thorn	Senior Scientist	Brown and Caldwell	201-574-4700	201-236-1607	prthorn@brwncald.com	
Nicole Lordan	Staff Scientist	Brown and Caldwell	201-574-4700	201-236-1607	nlordan@brwncald.com	
Jon Howland	Managing Engineer (Geotechnical Task Mgr)	Brown and Caldwell	518-472-1988	518-472-1986	jhowland@brwncald.com	
Marek Ostrowski	Managing Engineer (Engineering Task Mgr)	Brown and Caldwell	201-574-4700	201-236-1607	mostrowski@brwncald.com	

Worksheet #4
Project Personnel Sign-Off Sheet

Organization: Brown and Caldwell

Project Personnel	Title	Telephone Number	Signature	Date QAPP Read
Tamara Sorell	Managing Scientist (Overall Project Manager)	201-574-4700		
Frank J. Williams, P.G.	Supervising Geologist (Site Coordinator))	518-472-1988		
Greg Cole	QA Officer (Senior Project Chemist)	916-853-5320		
Peggy Gray-Erdmann	QA Manager	716-504-9800		
Gary T. Torosian	QA Manager	978-635-0424		

Worksheet #5 Project Organizational Chart[1]

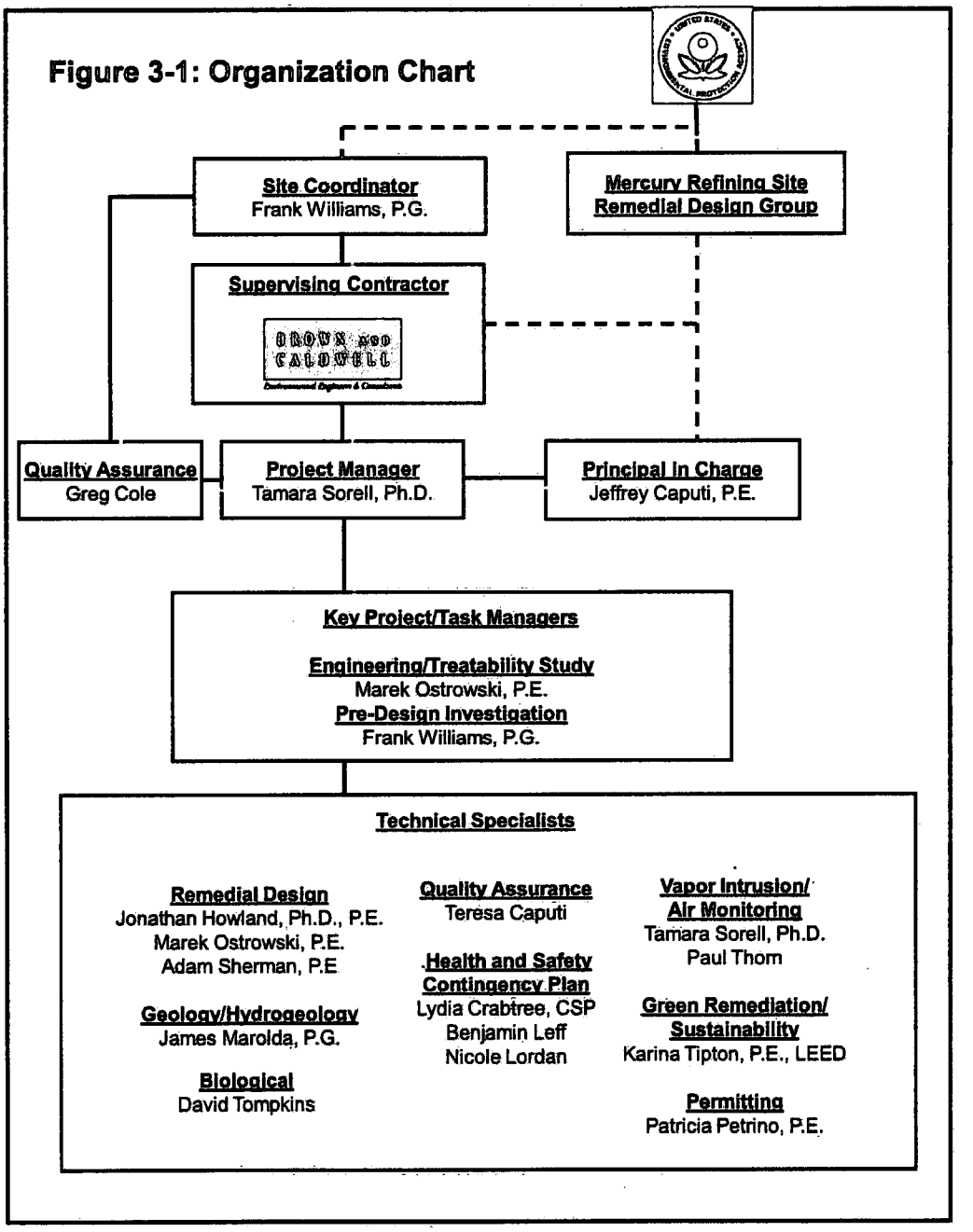

\\BCALL01\projects\Mercury_Refining_Superfund_Site\RDWP\Figures\Fig_3-1_Org_Chart.PPT

[1] See Worksheet #7 for description of personnel responsibilities

Worksheet #6
Communication Pathways

Communication Drivers	Responsible Entity	Name	Phone Number	Procedure (Timing, Pathways, etc.)
Contact USEPA	Brown and Caldwell (Supervising Contractor)	Frank Williams, PG [1](Site Coordinator), Brown and Caldwell	518-472-1988	All written and most verbal from the consultants and contractors for the Group will be made through Mr. Williams, unless otherwise directed by the Group. Mr. Williams has been approved by the USEPA as the Site Coordinator.
Point of Contact at USEPA	USEPA Region 2	Tom Taccone (Remedial Project Manager), USEPA Region 2	212-637-4281	Materials to be submitted to USEPA will be provided to Mr. Taccone
Manage Project Phases	Brown and Caldwell	Tamara L. Sorell, Ph.D. (Project Manager), Brown and Caldwell	201-574-4700	Changes in scope and requests by USEPA or others will be provided by Mr. Taccone. Dr. Sorell will coordinate BC resources accordingly.
QAPP changes in the field	Brown and Caldwell Field Sampling Manager	Frank Williams, PG (Site Coordinator), Brown and Caldwell	518-472-1988	Field driven adjustments, or non-conformance, to the QAPP will be addressed through Mr. Williams and reported to Dr. Sorell and Mr. Taccone
Reporting Geotechnical Lab Quality Issues	GeoTesting Express	Gary Torosian, GeoTesting Express	978-635-0424	Deviations in compliance with QA/QC and ASTM methods will be reported to Ms. Sorell by Mr. Torosian.
Reporting Analytical Lab Quality Issues	TestAmerica	Peggy Gray-Erdmann, TestAmerica	716-504-9800	Deviations in compliance with QA/QC will be reported to Dr. Sorell by Ms. Gray-Erdmann.
QAPP Amendments	Brown and Caldwell	Tamara L. Sorell, Ph.D. (Project Manager), Brown and Caldwell	201-574-4700	QAPP amendments, as necessary, will be initiated by Dr. Sorell, after authorization by Mr. Taccone
Health and Safety Modification Required	Brown and Caldwell	Frank Williams, PG (Site Coordinator), Brown and Caldwell	518-472-1988	Health and safety issues in the field will be reported to Brown and Caldwell Health and Safety personnel[2]

[1] See Worksheet #7 for Personnel Responsibilities.
[2] See Health and Safety Contingency Plan (Appendix D of Remedial Design Work Plan) for details regarding health and safety protocols, personnel, and responsibilities.

Worksheet #7[1]
Personnel Responsibilities and Qualifications Table

Name	Title	Organizational Affiliation	Responsibilities	Education and Experience Qualifications
Thomas Taccone	Remedial Project Manager	USEPA	USEPA Project Coordinator	USEPA to provide
Jeffrey R. Caputi, P.E., CHMM, QEP	Vice President	Brown and Caldwell (Supervising Contractor)	Project Officer: ensure availability of resources to serve the project; provides guidance to project team	B.S. Environmental Engineering Technology; M.S. Environmental Engineering; 24 years experience
Tamara L. Sorell, Ph.D.	Managing Scientist	Brown and Caldwell	Project Manager: responsible for overall coordination with Responsible Party, project assignments, schedule and budget, and implementation of QA/QC procedures	A.B., Biochemical Sciences, Ph.D. Pharmacology; 23 years experience
Frank J. Williams, P.G.	Supervising Geologist	Brown and Caldwell	Project Coordinator: communicates directly with EPA regarding project activities; works with Project Manager on staffing, scheduling and preparation of deliverables; oversees field team; manages RDI	A.B. Geology; 23 years experience
Marek Ostrowski, P.E.	Managing Engineer	Brown and Caldwell	Project Engineering Manager: responsible for preparation of remedial design and implementation of treatability study	B.S., Civil Engineering, M.S., Civil Engineering
Jonathan D. Howland, Ph.D., P.E.	Managing Engineer	Brown and Caldwell	Project Geotechnical Manager: provides technical support to investigation and design teams on geotechnical issues	B.S. Civil Engineering; M. Eng., Civil Engineering; Ph.D. Civil (Geotechnical) Engineering; 30+ years experience
Gregory Cole	Project QA Officer	Brown and Caldwell	Project QA Officer: receives laboratory reports and EDDs; uploads, reviews and validates data;	B.S., Psychoblology with Chemistry Minor
Peggy Gray-Erdmann	QA Officer	TestAmerica Buffalo	Analytical Laboratory QA Officer: responsible for delivery and quality of analytical chemistry services	
Gary T. Torosian	QA Manager	GeoTesting Express	Geotechnical Laboratory QA Manager: responsible for delivery and quality of geotechnical analysis services	
David Tompkins	Vice President	Kleinfelder	Project Biological Manager: implements and supervises fish sampling program; coordinates with Supervising Contractor to obtain co-located sediment and surface water samples	B.S. Environmental Science and Geography, M.S. Wildlife Ecology;27 years experience

[1] Resumes of key project team members appear following QAPP Worksheet #37

Worksheet #8
Special Personnel Training Requirements Table

Project Function	Specialized Training – Title or Description of Course	Training Provider	Training Date	Personnel/Groups Receiving Training	Personnel Titles/ Organizational Affiliation	Location of Training Records/Certificates
HAZWOPER	40-hour initial training as per 29 CFR 1910.120	Various certified out-sourced providers	Various	Field personnel, Project Manager, and other key staff.	Various BC staff and drilling subcontractor field staff.	BC corporate office, Walnut Creek, CA and BC's Columbus, OH office.
HAZWOPER	8-hour annual refresher as per 29 CFR 1910.120	Certified in-house and out-sourced providers	Various	Field personnel, Project Manager, and other key staff.	Various BC staff and drilling subcontractor field staff.	BC corporate office, Walnut Creek, CA and BC's Columbus, OH office.
HAZWOPER	CPR and first aid training as per 29 CRF 1910.120	Out-sourced to certified trainers	Various	Field Supervisor and other key field staff.	Various BC field staff.	BC corporate office, Walnut Creek, CA and BC's Columbus, OH office.

Worksheet #9
Project Scoping Session Participants Sheet

No formal scoping sessions with the USEPA have been held for this project. An internal project kick-off meeting was had by Brown and Caldwell on October 8, 2009

Project Name: Remedial Design (RD)/RD Investigation **Projected Date(s) of Sampling:** Spring 2010 **Project Manager:** Tamara Sorell	**Site Name:** Mercury Refining Superfund Site **Site Location:** Colonie, NY

Date of Session:
Scoping Session Purpose:

Name	Title	Affiliation	Phone #	E-mail Address	Project Role
Tamara Sorell	Managing Scientist	Brown and Caldwell	201-574-4700	tsorell@brwncald.com	PM
Karina Tipton	Senior Engineer			ktipton@brwncald.com	Green Remediation Plan
Jeff Caputi	Vice President			jcaputi@brwncald.com	Senior Oversight
Benjamin Leff	Senior Construction Engineer			bleff@brwncald.com	Health and Safety Contingency Plan
Jim Marolda	Senior Hydrogeologist			@brwncald.com	Field Team
Teresa Caputi	Staff Scientist			@brwncald.com	QA and Biological Support
Adam Sherman	Principal Engineer		518-472-1988	@brwncald.com	Engineering Design
Frank Williams	Supervising Geologist			@brwncald.com	Site Coordinator
Jon Howland	Managing Engineer			@brwncald.com	Geotechnical

Comments/Decisions: Project assignments and roles reviewed

Action Items: Initiate RDWP activities

Consensus Decisions: Cannot address Pilot Study details until results of bench scale study are available

Worksheet #10
Problem Definition

DATA QUALITY OBJECTIVES (DQOs)

- See Section 1 of the QAPP (Appendix A of the Remedial Design Work Plan) for discussion of site background/history and problem definition.

Worksheet #11
Project Quality Objectives/Systematic Planning Process Statements

Who will use the data?
What will the data be used for?
What type of data are needed? (target analytes, analytical groups, field screening, on-site analytical or off-site laboratory techniques, sampling techniques)
How "good" do the data need to be in order to support the environmental decision?
How much data are needed? (number of samples for each analytical group, matrix, and concentration)
How should the data be collected?
Who will generate the data?
How will the data be reported?
How will the data be archived?

See Section 3.2 of the QAPP (Appendix A of the Remedial Design Work Plan) for a discussion of Project Quality Objectives (PQOs)

Worksheet #12
Measurement Performance Criteria Table

Matrix	Aqueous/Nonaqueous
Analytical Group	Metals[1]
Concentration Level	Standard

Sampling Procedure	Analytical Method/SOP[1]	Data Quality Indicators (DQIs)	Measurement Performance Criteria	QC Sample and/or Activity Used to Assess Measurement Performance	QC Sample Assesses Error for Sampling (S), Analytical (A) or both (S&A)
Soil, Groundwater, Surface Water, Sediment, and Fish Tissue Sampling	SW-846 7470A/7471A (mercury) SW-846 6010B (arsenic, manganese, and thallium); groundwater only[2]	Precision/Laboratory	RPD<20%[3]	Laboratory Duplicate	A
		Precision/Laboratory	RPD<25%	Field Duplicate	S & A
		Accuracy/Bias	75%<% Recovery<125%	MS/MSD	S & A
		Accuracy/Bias	80%<% Recovery<120%	Laboratory Control Sample	A
		Accuracy/Lab Contamination	No target analytes>RL..	Method Blank	A
		Accuracy/Field contamination	No Target Compounds >RL	Field Blank	S & A
		Accuracy/Holding Time	180 Days / Hg in 28 days	Reported sample data	A
		Completeness	>90% field samples >90% lab analyses	Reported sample data	S & A
		Sensitivity	Project QL ≤ Project Action Limit	Reported Sample Data	A

[1] Both filtered and unfiltered samples will be obtained for mercury, arsenic and thallium. Suction filtration of the groundwater samples will be performed in the field with the use of a Buchner funnel fitted with a 0.45 µm pore size, sample-dedicated filter disk or other suitable field filtration device. See Section 4.5.1 of QAPP document.
[2] Fish tissue total mercury will be performed by the TEST AMERICA Burlington facility and the remaining analyses by the TEST AMERICA Buffalo facility. The performance criteria are the same for both SOPs.
[3] In general, RPD criteria have been set to 20% for lab samples and to 25% for field samples to reflect the greater potential for variability.

Worksheet #12
Measurement Performance Criteria Table

Matrix	Soil (Nonaqueous)
Analytical Group	Metals
Concentration Level	Standard

Sampling Procedure	Analytical Method/SOP[1]	Data Quality Indicators (DQIs)	Measurement Performance Criteria	QC Sample and/or Activity Used to Assess Measurement Performance	QC Sample Assesses Error for Sampling (S), Analytical (A) or both (S&A)
Soil and Sediment Sampling	TCLP Mercury (ILMO4.1/5.2/5.3)	Precision/Laboratory	RPD<20%	Laboratory Duplicate	A
		Precision/Laboratory	RPD<20%	Field Duplicate	S & A
		Accuracy/Bias	80%<% Recovery<120%	Laboratory Control Sample	A
		Accuracy/Lab Contamination	No target analytes>RL..	Method Blank	A
		Accuracy/Holding Time	28 days	Reported sample data	A
		Completeness	>90% field samples >90% lab analyses	Reported sample data	S & A
		Sensitivity	Project QL in extract ≤ TCLP Limit (0.2 ug/l)	Reported Sample Data	A

Worksheet #12
Measurement Performance Criteria Table

Matrix	Aqueous/Nonaqueous
Analytical Group	Metals (Specialty)
Concentration Level	Standard

Sampling Procedure	Analytical Method/SOP[1]	Data Quality Indicators (DQIs)	Measurement Performance Criteria	QC Sample and/or Activity Used to Assess Measurement Performance	QC Sample Assesses Error for Sampling (S), Analytical (A) or both (S&A)
Surface Water and Sediment Sampling	Methyl Mercury	Precision/Laboratory	RPD<20%	MS/MSD	A
		Precision/Laboratory	RPD<20%	Field Duplicate	S & A
		Accuracy/Bias	65%<% Recovery<135%	MS/MSD	S & A
		Accuracy/Bias	67%<% Recovery<133%	Laboratory Control Sample	A
		Accuracy/Lab Contamination	No target analytes>RL..	Method Blank	A
		Accuracy/Field contamination	No Target Compounds >RL	Field Blank	S & A
		Accuracy/Holding Time	180 Days / Hg in 28 days	Reported sample data	A
		Completeness	>90% field samples >90% lab analyses	Reported sample data	S & A
		Sensitivity	Project QL ≤ Project Action Limit	Reported Sample Data	A

Worksheet #12 (Continued)
Measurement Performance Criteria Table

Matrix	Aqueous
Analytical Group	Wet Chemistry (Alkalinity)
Concentration Level	Standard

Sampling Procedure	Analytical Method/SOP[3]	Data Quality Indicators (DQIs)	Measurement Performance Criteria	QC Sample and/or Activity Used to Assess Measurement Performance	QC Sample Assesses Error for Sampling (S), Analytical (A) or both (S&A)
Surface Water Sampling	EPA 310.2	Precision/Laboratory	RPD <20%	Laboratory Duplicate	A
		Precision/Sample Collection	RPD <20%	Field Duplicate	S & A
		Accuracy/Bias	Laboratory statistical control limits (entered into lab LIMS)	MS/MSD	S & A
		Accuracy/Bias	80%<% Recovery<120%	Laboratory Control Sample	A
		Accuracy/Lab Contamination	No target analytes>RL	Method Blank	A
		Accuracy/Field Contamination	No Target Compounds >RL	Field Blank	S & A
		Accuracy/Holding Time	14 days	Reported sample data	A
		Completeness	>90% field samples >90% lab analyses	Reported sample data	S & A
		Representativeness	RPD <25% for detected data, ND comparison	Field Duplicate	S & A
		Sensitivity	QL ≤ 10 mg/l	Reported Sample Data	A

Worksheet #12 (Continued)
Measurement Performance Criteria Table

Matrix	Aqueous
Analytical Group	Wet Chemistry (Hardness)
Concentration Level	Standard

Sampling Procedure	Analytical Method/SOP[3]	Data Quality Indicators (DQIs)	Measurement Performance Criteria	QC Sample and/or Activity Used to Assess Measurement Performance	QC Sample Assesses Error for Sampling (S), Analytical (A) or both (S&A)
Surface Water Sampling	EPA 130.2	Precision/Laboratory	RPD <20%	Laboratory Duplicate	A
		Precision/Sample Collection	RPD <20%	Field Duplicate	S & A
		Accuracy/Bias	85%<% Recovery<115%	Laboratory Control Sample	S & A
		Accuracy/Holding Time	6 months	Reported sample data	A
		Completeness	>90% field samples >90% lab analyses	Reported sample data	S & A
		Representativeness	RPD <25% for detected data, ND comparison	Field Duplicate	A
		Sensitivity	QL ≤ 10 mg/l	Reported Sample Data	S & A

Worksheet #12 (Continued)
Measurement Performance Criteria Table

Matrix	Solid (Sediment)
Analytical Group	Total Organic Carbon
Concentration Level	Standard

Sampling Procedure	Analytical Method/SOP[3]	Data Quality Indicators (DQIs)	Measurement Performance Criteria	QC Sample and/or Activity Used to Assess Measurement Performance	QC Sample Assesses Error for Sampling (S), Analytical (A) or both (S&A)
Sediment Sampling	Lloyd Kahn	Precision/Laboratory	RPD <20%	Sample Duplicate	A
		Precision/Sample Collection	RPD <25%	Field Duplicate	S & A
		Precision	RPD <40%	Duplicate of each sample	A
		Accuracy/Bias	75%<% Recovery<125%	Laboratory Control Sample	S & A
		Accuracy/Bias	75%<% Recovery<125%	Matrix spike	S & A
		Accuracy/Holding Time	28 days	Reported sample data	A
		Completeness	>90% field samples >90% lab analyses	Reported sample data	S & A
		Representativeness	RPD <25% for detected data, ND comparison	Field Duplicate	A
		Sensitivity	QL ≤ 10 mg/l	Reported Sample Data	S & A

Worksheet #12 (Continued)
Measurement Performance Criteria Table

Matrix	Aqueous
Analytical Group	Total Dissolved Solids
Concentration Level	Standard

Sampling Procedure	Analytical Method/SOP[3]	Data Quality Indicators (DQIs)	Measurement Performance Criteria	QC Sample and/or Activity Used to Assess Measurement Performance	QC Sample Assesses Error for Sampling (S), Analytical (A) or both (S&A)
Surface Water Sampling	160.1	Accuracy/Bias	85%<% Recovery<115%	Laboratory Control Sample	S & A

Worksheet #12 (Continued)
Measurement Performance Criteria Table

Matrix	Solid (Biota)
Analytical Group	Percent Lipids
Concentration Level	Standard

Sampling Procedure	Analytical Method/SOP[3]	Data Quality Indicators (DQIs)	Measurement Performance Criteria	QC Sample and/or Activity Used to Assess Measurement Performance	QC Sample Assesses Error for Sampling (S), Analytical (A) or both (S&A)
Surface Water Sampling	EPA SOP ASB P100, ASB E100 and NOAA Technical Memorandum NOS ORCA 130	Precision/Laboratory	RPD <20%	Sample Duplicate	A
		Accuracy/Lab Contamination	No lipid>0.1%	Method Blank	A
		Accuracy/Holding Time	28 days	Reported sample data	A

Worksheet #12 (Continued)
Measurement Performance Criteria Table

Matrix	Solid (Soil, Sediment, Biota)
Analytical Group	Percent Solids
Concentration Level	Standard

Sampling Procedure	Analytical Method/SOP[3]	Data Quality Indicators (DQIs)	Measurement Performance Criteria	QC Sample and/or Activity Used to Assess Measurement Performance	QC Sample Assesses Error for Sampling (S), Analytical (A) or both (S&A)
Soil, Sediment and Fish Sampling	TestAmerica SOP No. BR-WC-006, Rev. 5	Precision/Laboratory	RPD <20%	Sample Duplicate	A
		Representativeness	RPD <25%	Field Duplicate	A
		Completeness	>90% field samples >90% lab analyses	Reported sample data	S & A

Worksheet #12 (Continued)
Measurement Performance Criteria Table

Matrix	Solid (Soil)
Analytical Group	Particle Size
Concentration Level	Standard

Sampling Procedure	Analytical Method/SOP3	Data Quality Indicators (DQIs)	Measurement Performance Criteria	QC Sample and/or Activity Used to Assess Measurement Performance	QC Sample Assesses Error for Sampling (S), Analytical (A) or both (S&A)
Soil Sampling	ASTM D422-63	There are no listed performance criteria for this method.			
	ASTM D4318	There are no listed performance criteria for this method.			

Worksheet #12 (Continued)
Measurement Performance Criteria Table

Matrix	Air
Analytical Group	Metals
Concentration Level	Standard

Sampling Procedure	Analytical Method/SOP[3]	Data Quality Indicators (DQIs)	Measurement Performance Criteria	QC Sample and/or Activity Used to Assess Measurement Performance	QC Sample Assesses Error for Sampling (S), Analytical (A) or both (S&A)
Soil Vapor Sampling	Modified IO-5: FGS 136.01 (Analysis of Hg in Air via Capture on Solid Sorbent Traps) FGS-009.3 (Digestion for Gas/Air Samples Collected on Fluegas Sorbent for Total Mercury™ Traps)	Precision/Laboratory	RPD <20%	Analytical Duplicate	A
		Precision/Laboratory	RPD <25%	Field Duplicate	S & A
		Accuracy/Bias	75%<% Recovery<125%	Laboratory Control Sample	S & A
		Accuracy/Bias	75%<% Recovery<125	Analytical Spike	S & A
		Accuracy/Bias	RPD <25%	Analytical Spike Duplicate	S & A
		Accuracy/Lab Contamination	<PQL	Method Blank	A
		Sensitivity	Project QL ≤ Associated Performance Standard	Reported Sample Data	S & A

Worksheet #13
Secondary Data Criteria and Limitations Table

Secondary Data	Data Source (Originating Organization, Report Title, and Date)	Data Generator(s) (Originating Org., Data Types, Data Generation/Collection Dates)	How Data Will Be Used	Limitations on Data Use

See Section 4 of the main QAPP document for a discussion of the Remedial Design Investigation sampling program scope and its relationship to previous information and associated data gaps.

Worksheet #14
Summary of Project Tasks

Field Sampling Tasks (see Section 4 of QAPP):

Sampling grid layout
Soil delineation sampling.
Sewer investigation.
Sub slab investigation – geotechnical and delineation sampling.
Install and sample monitoring wells.
Install and sample soil vapor probes.
Survey locations and elevations of soil borings and monitoring wells and locations of stream samples.
Fish tissue, sediment and surface water sampling.

Analysis Tasks (see Section 4 of QAPP):

Soil samples will be subjected to specific geotechnical tests.
Environmental media samples will be subjected to analytical testing as needed.

Quality Control Tasks:

Collect field duplicates, trip blanks, field blanks, and MS/MSD samples as appropriate (see Section 8 of QAPP).

Secondary Data:

See Worksheet No. 13 and Section 4 of QAPP).

Data Management Tasks:

BC will manage the geotechnical and analytical data in data spreadsheets and/or a relational database (See Section 7.1.4 of QAPP).

Documentation and Records (see Section 5 of QAPP):

Records will be prepared while sampling in the form of field logbook entries and completion of field forms, as appropriate.
Chain-of-custody forms will be maintained.
Data documentation and reporting by the laboratories will be in accordance with the relevant ASTM methods, laboratory SOPs and QA Manuals.
Data will be uploaded and stored in Brown and Caldwell's Environmental Data Management System (EDMS) database. See Section 7.1.4 of the QAPP.

Worksheet #14 (Continued)
Summary of Project Tasks

Data Deliverables:

Geotechnical data will be provided in hard copy format, including all calculations.
Analytical data will be provided as electronic data deliverable (EDD) and data summary reports completed by TestAmerica Buffalo.

Field Data Review:

Field data review records reviewed for completeness and accuracy within one week after sample collection.

Data Review Tasks:

Verification of data completeness.
Review of samples data reports and QA summary reports to verify compliance with the MPCs on Worksheet No. 12.

Data Reporting:

Paper copies of laboratory summary report and QA report.
EDD for analytical data from TestAmerica Buffalo.
Summary tables and figures in reports to USEPA, as well as paper copy of the raw data.

Worksheet #15
Reference Limits and Evaluation Table

Matrix: **Soil**
Analytical Group: Metals
Concentration Level: Standard

Analyte	CAS Number	Project Action Limit (applicable units)	Project Quantitation Limit[1] (applicable units)	Analytical Method[2]		Achievable Laboratory Limits[32]	
				MDLs	Method QLs	MDLs	QLs
Mercury	7439-97-6	5.7 mg/kg	0.1 mg/kg	NA	NA	0.0081 mg/kg	0.02 mg/kg

[1] The PQL accounts for moisture and matrix effects that may result in dilution and elevate reporting limits beyond the default laboratory-achievable QL
[2] Analytical MDLs and QLs are those documented in validated methods
[3] Achievable MDLs and QLs are limits that an individual laboratory can achieve when performing a specific analytical method.

Worksheet #15 (Continued)
Reference Limits and Evaluation Table

Matrix: **Sediment**
Analytical Group: Metals
Concentration Level: Standard

Analyte	CAS Number	Project Action Limit (applicable units)	Project Quantitation Limit (applicable units)	Analytical Method[1]		Achievable Laboratory Limits[2]	
				MDLs	Method QLs	MDLs	QLs
Mercury	7439-97-6	1.3 mg/kg	0.2 mg/kg	NA	NA	0.0081 mg/kg	0.02 mg/kg
Methyl Mercury	22967-92-6	NA	0.5 ug/kg	0.02 ng/l (water)	NA	-	0.01-0.5 ug/kg

[1]Analytical MDLs and QLs are those documented in validated methods.
[2]Achievable MDLs and QLs are limits that an individual laboratory can achieve when performing a specific analytical method.
[3]Not applicable; there is no RAO in the ROD.

Worksheet #15 (Continued)
Reference Limits and Evaluation Table

Matrix: **Groundwater**
Analytical Group: Metals
Concentration Level: Standard

Analyte	CAS Number	Project Action Limit (applicable units)	Project Quantitation Limit (applicable units)	Analytical Method[1]		Achievable Laboratory Limits[2]	
				MDLs	Method QLs	MDLs	QLs
Mercury[3]	7439-97-6	0.7 ug/l	0.2 ug/l	NA	NA	0.00012 mg/L	0.0002 mg/L
Arsenic	7440-38-2	25 ug/l [4]	20 ug/l	NA	NA	0.0056 mg/L	0.01 mg/L
Manganese	7439-96-5	300 ug/l [4]	30 ug/l	NA	NA	0.00019 mg/L	0.003 mg/L
Thallium	7440-28-0	25 ug/l [5]	20 ug/l	NA	NA	0.01024 mg/L	0.02 mg/L

[1]Analytical MDLs and QLs are those documented in validated methods.
[2]Achievable MDLs and QLs are limits that an individual laboratory can achieve when performing a specific analytical method
[3]Mercury in the ISS investigation program will be analyzed for both total and dissolved form
[4]The purpose is to compare concentrations with background and/or upgradient concentrations. The Action Limit has been set at the NYS Part 703 Groundwater Standard.
[5]There is no Part 703 standard for thallium; Action Limit is the Federal Maximum Contaminant Limit.

Worksheet #15
Reference Limits and Evaluation Table

Matrix: **Surface Water**
Analytical Group: Metals
Concentration Level: Standard

Analyte	CAS Number	Project Action Limit (applicable units)	Project Quantitation Limit (applicable units)	Analytical Method[1]		Achievable Laboratory Limits[2]	
				MDLs	Method QLs	MDLs	QLs
Mercury	7439-97-6	0.77 µg/L[3]	0.5 µg/L	NA	NA	0.00012 mg/L	0.0002 mg/L
Methyl Mercury	22967-92-6	NA	0.1 ng/L	0.02 ng/L	NA	0.02 ng/L	0.05 ng/L

[1]Analytical MDLs and QLs are those documented in validated methods.
[2]Achievable MDLs and QLs are limits that an individual laboratory can achieve when performing a specific analytical method.
[3]Part 703 Water Quality Standard for protection of freshwater aquatic life (chronic).

Worksheet #15 (Continued)
Reference Limits and Evaluation Table

Matrix: **Fish Tissue**
Analytical Group: Metals
Concentration Level: Standard

Analyte	CAS Number	Project Action Limit (applicable units)	Project Quantitation Limit (applicable units)	Analytical Method[1]		Achievable Laboratory Limits[2]	
				MDLs	Method QLs	MDLs	QLs
Mercury	7439-97-6	1 mg/kg[1]	0.3 mg/kg	NA	NA	0.0070 mg/kg	0.034 mg/kg

[1]FDA action level in commercial freshwater fish

Worksheet #15 (Continued)
Reference Limits and Evaluation Table

Matrix: **Soil Vapor**
Analytical Group: Metals
Concentration Level: Standard

Analyte	CAS Number	Project Action Limit (applicable units)	Project Quantitation Limit (applicable units)	Analytical Method[1]		Achievable Laboratory Limits[2]	
				MDLs	Method QLs	MDLs	QLs
Mercury	7439-97-6	3.1 µg/m³ (3)	2 µg/m³	NA	NA	0.5 – 20 µg/m³	20 - 40 µg/m³

[1]Analytical MDLs and QLs are those documented in validated methods.
[2]Achievable MDLs and QLs are limits that an individual laboratory can achieve when performing a specific analytical method.
[3] Ten times the USEPA Risk Screening Level for elemental Hg in indoor air. The Quality Assurance Officer will coordinate with the field team and analytical laboratory to target the detection range (for example, by modifying the collection program as necessary to pump more air through the tubes and maximize Hg mass collected). Example calculation assuming a target of 5 ng/tube (0.005 µg) and pumping rate of 0.3L/min. (0.0003 m³/min.):

$$0.005\ \mu g \times 0.0003\ m^3/min. = 17\ minutes$$

Worksheet #16
Project Schedule/Timeline Table

Activities	Organization	Dates (MM/DD/YY)		Deliverable	Deliverable Due Date
		Anticipated Date(s) of Initiation	Anticipated Date of Completion		
Access Negotiations	Brown and Caldwell	9/30/09	1/28/10		
Remedial Design Work Plan (RDWP)	Brown and Caldwell	9/30/09	3/15/10	Draft RDWP Report Final RDWP Report	12/14/09 5/25/10
Remedial Design (RD) Investigation	Brown and Caldwell	3/15/10	10/6/10	Draft RDI Report Final RDI Report	11/11/10 1/14/11
Treatability Study	Brown and Caldwell	5/30/10	9/28/10	Treatability Study Report	12/24/10
Remedial Design	Brown and Caldwell	10/6/10	7/5/11	Draft RD Report Final RD Report	7/8/11 10/13/11
Remedial Implementation	Brown and Caldwell	10/3/11	5/26/14	Remedial Construction Completion Report	2/24/14

Worksheet #17
Sampling Design and Rationale

Describe and provide a rationale for choosing the sampling app roach (e.g., grid system, biased statistical approach):

- Soil sampling grid (20 foot centers, 6" depth intervals) and locations of sewer bedding samples will provide adequate precision for planning remedial excavations.
- Groundwater monitoring well locations will provide adequate spatial delineation for planning the application of ISS in the area surrounding the elevated mercury concentrations previously identified in monitoring well MW-5D.
- Sediment sampling locations will provide adequate precision for planning remedial excavation of sediment in the Unnamed Tributary in the vicinity of the former MERECO storm sewer outfall and extending downstream to the culverted portion of the tributary under the railroad tracks.
- Surface water, sediment, and fish tissue sampling will capture conditions in the Tributary, the main branch of Patroon Creek, and in the I-90 Pond.

Details on the basis for the sampling program appear in Section 4 of the QAPP.

Describe the sampling design and rationale in terms of what matrices will be sampled, what analytical groups will be analyzed and at what concentration levels, the sampling locations (including QC, critical, and background samples), the number of samples to be taken, and the sampling frequency (including seasonal considerations) [May refer to map or Worksheet #18 for details]:

Refer to Section 4 of the QAPP for a description of the sampling design and rationale, what matrices will be sampled, and what analytical groups will be analyzed. Refer to Worksheet #18 and Figures 2, 3 and 4 for details.

Worksheet #18
Sampling Locations and Methods/SOP Requirements Table

Sampling Location/ID Number	Matrix	Depth (units)	Analytical Group	Concentration Level	Number of Samples (identify field duplicates)	Sampling SOP Reference	Rationale for Sampling Location
MR-SB-1 through MR-SB-5	Soil	TBD	Mercury	Low	40 + 2 FD	Attachment A[1]	ISS Evaluation
MR-SB-41 through MR-SB-358	Soil	TBD	Mercury	Low	318 + 16 FD	Attachment A	Soil Hg Delineation
Select samples from MR-SB-41 through MR-SB-358	Soil	TBD	TCLP Mercury	Low	20 + 1 FD	Attachment A	Waste Characterization
Select samples from MR-GT-1 through MR-GT-4	Soil	TBD	Geotechnical	N/A	TBD	Attachment A	Geotechnical Evaluation
MR-SD-1 through MR-SD-5	Sediment	Up to 3 feet	Mercury	Low	5 + 1 FD	Attachment A	Sediment Delineation
MR-SD-6 through MR-SD-11	Downstream Sediment	Up to 3 feet	Mercury, Methyl Mercury	Low	6 + 1 FD	Attachment A	Future biota impacts
Select samples from MR-SD-1 through MR-SD-5	Sediment	Up to 3 feet	TCLP Mercury	Low	1 + 1 FD	Attachment A	Waste Characterization
Select samples from MR-VP-1 through MR-VP-5	Groundwater (VP)	NA	Mercury	Low	50 + 3 FD	Attachment A	ISS Evaluation
MR-MW-1 through MR-MW-12	Groundwater (low flow)	NA	Metals (As, Mn, Hg & Tl	Low	12 + 1 FD	Attachment A	ISS Evaluation
MR-SW-1 through MR-SW-3	Surface Water	NA	Mercury	Low	3 + 1 FD	Attachment A	Future biota impacts
MR-SW-1 through MR-SW-3	Surface Water	NA	Methyl Mercury	Low	3 + 1 FD	Attachment A	Future biota impacts
MR-FT-1 through MR-FT-3	Fish Tissue	NA	Mercury	Low	TBD	Attachment A	Future biota impacts
MR-SV-1 through MR-SV-#	Soil Vapor	NA	Mercury	Low	TBD	Section 4.6 of QAPP	Baseline soil vapor

[1] Field forms appear as Attachment A-3.

Worksheet #19
Analytical SOP Requirements Table

Matrix	Analytical Group	Concentration Level	Analytical and Preparation Method/SOP Reference	Sample Volume	Containers (number, size, and type)	Preservation Requirements (chemical, temperature, light protected)	Maximum Holding Time (preparation/ analysis)
Water	Total Mercury	<0.7 ug/L	BF-ME-011	500 mLs	1 liter plastic	Cool to 4°C, pH <2 with HNO_3	180 days; 28 days for Hg
Water	Methyl Mercury	NA	NC-GC-039	43 mL	43 mL amber glass	Cool to 4°C, HCl	180 days
Water	Arsenic	25 ug/L	BF-ME-009	50 mLs	1 liter plastic	Cool to 4°C, pH <2 with HNO_3	180 days
Water	Manganese	300 ug/L	BF-ME-009	50 mLs	1 liter plastic	Cool to 4°C, pH <2 with HNO_3	180 days
Water	Thallium	2 ug/L	BF-ME-009	50 mLs	1 liter plastic	Cool to 4°C, pH <2 with HNO_3	180 days
Soil	Total Mercury	<5.7 mg/Kg	BF-ME-011		4 oz. jar	Cool to 4°C	180 days; 28 days for Hg
Soil	TCLP Mercury	NA	BF-OP-001/BF-ME-012	130 g	4 oz jar	Cool to 4°C	28 days
Sediment	Total Mercury	<1.3 mg/Kg	BF-ME-011		4 oz. jar	Cool to 4°C	180 days; 28 days for Hg
Sediment	Methyl Mercury	NA	NC-GC-039		4 oz jar	Cool to 4°C	28 days
Sediment	TCLP Mercury	NA	BF-OP-001/BF-ME-012	130 g	4 oz jar	Cool to 4°C	28 days
Fish Tissue	Total Mercury	NA	BF-ME-011	0.3 g	4 oz jar	Cool to 4°C	28 days
Geotechnical	Moisture Content	NA	See Worksheet #23		8 oz. jar	N/A	180 days
Geotechnical	Grain size via sieve/hydrometer	NA	See Worksheet #23		8 oz. jar	N/A	180 days
Geotechnical	Atterberg limits	NA	See Worksheet #23		8 oz. jar	N/A	180 days
Geotechnical	Density	NA	See Worksheet #23		Shelby tube	Seal with wax, cap and duct tape	180 days

Geotechnical	Consolidated, Undrained Triaxial with pore pressure (3 tests)	NA	See Worksheet #23		Shelby tube	Seal with wax, cap and duct tape	180 days
Geotechnical	Unconfined Compressive Strength	NA	See Worksheet #23		Shelby tube	Seal with wax, cap and duct tape	180 days
Soil Vapor	Total Mercury	3.1 ug/m^3	FGS 136.01		Solid Sorbent Traps	N/A	NA

Worksheet #20
Field Quality Control Sample Summary Table

Matrix	Analytical Group	Concentration Level	Analytical and Preparation SOP Reference	No. of Sampling Locations	No. of Field Duplicate Pairs	No. of MS	No. of Field Blanks	No. of Equip. Blanks	No. of Trip Blank Samples	Total No. of Samples to Lab
Aqueous and non-aqueous	Metals	Low	See Worksheet #12	TBD [1]	≥5% of environmental samples per matrix	≥5% of environmental samples per matrix	One per day per matrix	One per day per matrix	NA	TBD
Aqueous and non-aqueous	Specialty chemistry (alkalinity, hardness, TOC, TDS)	Low	See Worksheet #12	TBD	≥5% of environmental samples per matrix					
Soil (non-aqueous)	TCLP extraction	Low	See Worksheet #12	TBD	NA	NA	NA	NA	NA	TBD
Aqueous and non-aqueous	Methyl mercury, lipid	Low	See Worksheet #12	4	1	NA	NA	NA	NA	TBD
Vapor	Mercury	Low	See Worksheet #12	TBD	≥5% of environmental samples per matrix	NA	NA	NA	NA	TBD

NA – Not applicable

Worksheet #21
Project Sampling SOP References Table

Reference Number	Title, Revision Date and/or Number	Originating Organization	Equipment Type	Modified for Project Work? (Y/N)	Comments
ASTM 1586	Standard Penetration Test (SPT) for split spoon sampling	ASTM	Split spoons	N	
ASTM 1587	Thin-walled Shelby tube sampling.	ASTM	Shelby tubes	N	

See Attachment A for SOPs for collection of environmental samples for laboratory submittal.
Sampling procedures are included in Section 4.0 of the QAPP.

Worksheet #22
Field Equipment Calibration, Maintenance, Testing, and Inspection Table

Field Equipment	Calibration Activity	Maintenance Activity	Testing Activity	Inspection Activity	Frequency	Acceptance Criteria	Corrective Action	Responsible Person	SOP Reference[1]
Photo-Ionization detector	Internal and against known standard	As per Owner's Manual	As per Owner's Manual	As per Owner's Manual	Daily	As per Owner's Manual	As per Owner's Manual	Field Team	Owner's Manual
Jerome 431-X mercury vapor analyzer (MVA)	Internal	As per Owner's Manual	As per Owner's Manual	As per Owner's Manual	Daily	As per Owner's Manual	As per Owner's Manual	Field Team	Owner's Manual
Flow-through instrumentation for groundwater sampling (pH, turbidity, specific conductance, temperature, oxidation-reduction potential (ORP), D.O.)	Internal and against known standard	As per Owner's Manual	As per Owner's Manual	As per Owner's Manual	Daily	As per Owner's Manual	As per Owner's Manual	Field Team	Owner's Manual
SoilTest Pocket Penetrometer	N/A	As per Owner's Manual	As per Owner's Manual	As per Owner's Manual	Daily	As per Owner's Manual	As per Owner's Manual	Field Team	Owner's Manual

Worksheet #23
Analytical SOP References Table[1]

Reference Number	Title, Revision Date, and/or Number	Definitive or Screening Data	Analytical Group	Instrument	Organization Performing Analysis	Modified for Project Work? (Y/N)
BF-ME-011	Analysis of Hg in aqueous samples	Definitive	Mercury	CVAA	TestAmerica Buffalo	N
BF-ME-010	Inductively Coupled Plasma – Mass Spectroscopy	Definitive	Metals	ICPMS	TestAmerica Buffalo	N
BF-ME-011	Analysis of Hg in solid samples	Definitive	Mercury	CVAA	TestAmerica Buffalo	N
BF-ME-003	Acid Digestion for Aqueous Samples	Definitive	Metals Prep	NA	TestAmerica Buffalo	N
BF-ME-005	Acid Digestion for Soil Samples	Definitive	Metals Prep	NA	TestAmerica Buffalo	N
BF-OP-001	TCLP and Synthetic Precipitation Leaching Procedure	Definitive	TCLP Extraction	NA	TestAmerica Buffalo	N
BF-ME-009	Inductively Coupled Plasma – Atomic Emission Spectroscopy, Spectrometric Method for Trace Element Analysis	Definitive	Metals	ICP	TestAmerica Buffalo	N
BF-WC-010, Rev. 1	Alkalinity Method No. 310.2	Definitive	pH	As per method	TestAmerica Buffalo	N
NC-GC-039, Rev. 2	Preparation and Analysis of Methyl Mercury by Gas Chromatography with Cold Vapor Atomic Fluorescence Detection	Definitive	Methyl Mercury	As per method	TestAmerica North Canton	N
BR-ME-004, Rev. 11	Mercury (Cold Vapor Technique)	Definitive	Mercury	As per method	TestAmerica Burlington	N
BR-EX-016, Rev. 7	Determination of Percent Lipids	Definitive	Organics	As per method	TestAmerica Burlington	N
BR-WC-006, Rev. 5	Percent Solids Determination	Definitive	Soil-Dry Weight	As per method	TestAmerica Burlington	N
BR-WC-008, Rev. 11	Total Organic Carbon in Soils & Sediment	Definitive	TOC	As per method	TestAmerica Burlington	N

BF-WC-002, Rev. 1	Total Hardness	Definitive	Soils-Hardness	As per method	TestAmerica Buffalo	N
BF-WC-003, Rev. 1	Total Dissolved Solids	Definitive	Chemistry	As per method	TestAmerica Buffalo	N
SOP No. BF-WC-010	Alkalinity	Definitive	Chemistry	As per method	TestAmerica Buffalo	N
FGS 136.01	Analysis of Hg in Air via Capture on Solid Sorbent Traps, September 9, 2009	Definitive	Mercury	As per method	Frontier GeoSciences, Inc.	N
ASTM D2166	Most recent revision	Definitive	Soil-Compressive Strength	As per method	GeoTesting Express	N
ASTM D2216	Most recent revision	Definitive	Soil-Moisture	As per method	GeoTesting Express	N
ASTM D422	Most recent revision	Definitive	Soil-Grain Size	As per method	GeoTesting Express	N
ASTM D4318	Most recent revision	Definitive	Soil-Atterberg Limits	As per method	GeoTesting Express	N
ASTM D2937	Most recent revision	Definitive	Soil-Density	As per method	GeoTesting Express	N
ASTM D4767	Most recent revision	Definitive	Soil-Triaxial	As per method	GeoTesting Express	N
ASTM D2166	Most recent revision	Definitive	Soil-Unconfined Compressive Strength	As per method	GeoTesting Express	N

[1]For geotechnical analyses, other tests may be added depending upon specific site conditions encountered during sampling.

Worksheet #24
Analytical Instrument Calibration Table

Instrument	Calibration Procedure	Frequency of Calibration	Acceptance Criteria	Corrective Action (CA)	Person Responsible for CA	SOP Reference
GC/CVAFS	Check of mass spectral ion intensities (tuning procedure) using BFB (8260B) and DFTPP (8270C)	Prior to initial calibration and calibration verification (every 12 hours)	Must meet the method requirements before samples are analyzed.	Retune instrument and verify the tune acceptability.	QA Manager/Group Leader/Analyst	
	Minimum five-point initial calibration for target analytes, lowest concentration standard at or near the reporting limit.	Initial calibration prior to sample analysis.	8270C: The minimum average SPCC RF is 0.050. 8260B: RSD is less than or equal to 15% or R2>0.99 for target analytes, and is less than or equal to 30% for CCC	Correct problem, then repeat initial calibration.	QA Manager/Group Leader/Analyst	
	Second-source calibration verification.	Once per five-point initial calibration.	Less than 20% for CCC compounds, less than or equal to 50% for non-CCC compounds. Allowance for 6 compounds above 50%.	Correct problem, then repeat second source verification. If it still fails, then repeat initial calibration.	QA Manager/Group Leader/Analyst	
	Daily calibration verification	Before sample analysis and at beginning of every 12 hours of analysis time.	8270C: The minimum average SPCC RF is 0.050. 8260B and 8270C: The percent drift/difference for RF is less than or equal to 20% for CCC analytes.	Correct problem, then repeat CCV. If still fails, repeat initial calibration.	QA Manager/Group Leader/Analyst	

Worksheet #24 (Continued)
Analytical Instrument Calibration Table

Instrument	Calibration Procedure	Frequency of Calibration	Acceptance Criteria	Corrective Action (CA)	Person Responsible for CA	SOP Reference
Metals (ICP)	Internal standards	During acquisition of calibration standard	Areas within -50% to +100% of last ICAL mid-point for each CCV	Inspect mass spectrometer and GC for malfunctions; mandatory reanalysis of samples analyzed while system was malfunctioning.	Lab Manager / Analyst	
	Initial calibration per manufacturer's instructions, with a minimum of one standard and a calibration blank.	Initial calibration prior to sample analysis	Accepted if the initial calibration verification (ICV) passes.	Correct problem, then repeat initial calibration.	Group Leader / Analyst	
	Low concentration standard at or near the reporting limit.	After one point calibration	Advisory limits of +/- 50	Evaluate run based on advisory limits.	Group Leader / Analyst	
	Second-source (ICV) calibration verification	Once per initial calibration	Within 10%	Correct problem, then repeat. If still fails, repeat initial calibration.	Group Leader / Analyst	
Metals (ICPMS)	Continuing calibration verification (CCV)	After every 10 samples and the end of the sequence.	Within 10%	Correct problem, then repeat. If still fails, repeat initial calibration. If CCV is biased high and associated samples are below the RL the data can be reported.	Group Leader / Analyst	
	Initial calibration per manufacturer's instructions, with a minimum of one standard and a calibration blank.	Initial calibration prior to sample analysis.	Correlation coefficient >0.995 (if more than one point); accepted if the initial calibration verification (ICV) passes.	Correct problem, then repeat initial calibration.	Group Leader / Analyst	
	Second-source (ICV) calibration verification	Once per initial calibration	Within 10%	Correct problem, then repeat. If still fails, repeat initial calibration.	Group Leader / Analyst	

Worksheet #24 (Continued)
Analytical Instrument Calibration Table

Instrument	Calibration Procedure	Frequency of Calibration	Acceptance Criteria	Corrective Action (CA)	Person Responsible for CA	SOP Reference
Metals (ICPMS)	Continuing calibration verification (CCV)	After every 10 samples and the end of the sequence.	Within 10%	Correct problem, then repeat. If still fails, repeat initial calibration. If CCV is biased high and associated samples are below the RL the data can be reported.	Group Leader / Analyst	
Metals (CVAA)	Initial calibration (IC) per manufacturer's instructions, with a minimum of five standards and a calibration blank.	Initial calibration prior to sample analysis.	Correlation coefficient >0.995; accepted if the initial calibration verification (ICV) passes.	Correct problem, then repeat initial calibration	Group Leader / Analyst	
	Second-source ICV, prepared at the calibration midpoint.	Once per initial calibration.	Within 10%.	Correct problem, then repeat. If still fails, repeat initial calibration	Group Leader /Analyst	

Worksheet #25
Analytical Instrument and Equipment Maintenance, Testing, and Inspection Table

Instrument/ Equipment	Maintenance Activity	Testing Activity	Inspection Activity	Frequency	Acceptance Criteria	Corrective Action	Responsible Person	SOP Reference
ICP	Replace disposables, flush lines, clean Injector and torch	Intensity of 1PPM Manganese STD within criteria	Check connections	Daily or as needed	Intensity of 1PPM Manganese STD within criteria	Replace, investigate injector, reanalyze	TestAmerica Chemist	
ICP	Replace pump windings	Monitor ISTD counts for variation	Instrument performance and sensitivity	As needed	Monitor ISTD counts for variation	Replace windings, recalibrate and reanalyze	TestAmerica Chemist	
CVAA	Replace disposables, flush lines	Sensitivity check	Instrument performance and sensitivity	Daily or as needed	CCV pass criteria	Recalibrate	TestAmerica Chemist	
ICPMS	Change tubing	Monitor Indium intensity counts	Instrument performance and sensitivity	As needed	Pass performance report	Replace tubing, perform performance report	TestAmerica Chemist	
ICPMS	Clean cones	Monitor Indium intensity counts	Instrument performance and sensitivity	As needed	Pass performance report	Clean, replace perform performance report	TestAmerica Chemist	

Worksheet #26
Sample Handling System

SAMPLE COLLECTION, PACKAGING, AND SHIPMENT
Sample Collection (Personnel/Organization): Lead Field Geologist, Brown and Caldwell
Sample Packaging (Personnel/Organization): Lead Field Geologist/BC Support Field Staff, Brown and Caldwell
Coordination of Shipment (Personnel/Organization): Lead Field Geologist/BC Support Field Staff, Brown and Caldwell
Type of Shipment/Carrier: Hand delivery, laboratory courier and/or FedEx
SAMPLE RECEIPT AND ANALYSIS
Sample Receipt (Personnel/Organization): Receiving counter of geotechnical and analytical laboratories as per their QA Manual
Sample Custody and Storage (Personnel/Organization): Geotechnical and analytical laboratories as per their QA Manual
Sample Preparation (Personnel/Organization): Geotechnical and analytical laboratories as per their QA Manual and test method SOP/ASTM standard
Sample Determinative Analysis (Personnel/Organization): Geotechnical and analytical laboratories as per their QA Manual and test method SOP/ASTM std.
SAMPLE ARCHIVING
Field Sample Storage (No. of days from sample collection): See Attachment B
Sample Extract/Digestate Storage (No. of days from extraction/digestion): Analytical laboratory as per their QA Manual and method SOP
Biological Sample Storage (No. of days from sample collection): Analytical laboratory as per their QA Manual and method SOP
SAMPLE DISPOSAL
Personnel/Organization: Geotechnical and analytical laboratories as per their QA Manual and method SOP
Number of Days from Analysis: Geotechnical and analytical laboratories as per their QA Manual and method SOP

Worksheet #27
Sample Custody Requirements

Field Sample Custody Procedures (sample collection, packaging, shipment, and delivery to laboratory):

Each environmental sample will be properly identified and individually labeled. Labels will be filled out in indelible ink with at least the following information: BC sample identification, date and time of sample collection, initials of sampler(s), analysis/test required, and preservation (as appropriate). The sample label will be securely attached to the sample container.

Environmental samples being analyzed by the analytical laboratory will be properly packaged and shipped for analysis. Following labeling, the sample bottles will be sealed with custody seals, and enclosed in clear sealable plastic bags (e.g., Ziploc® bags), through which the identifying label is visible.

The sample containers, now sealed in bags, will then be placed in a hard plastic cooler, an effort will be made to fill in voids with either ice or packaging material (e.g. bubble wrap). Samples are to be packed with sufficient ice (enclosed in double-bagged sealable plastic bags) to cool the samples to 4±2°C. Additionally, each iced cooler will be packed with a cooler temperature blank. LaTest Americay, the cooler should be filled with adequate cushioning material to minimize the possibility of container breakage.

Laboratory Sample Custody Procedures (receipt of samples, archiving, disposal):

Laboratory custody procedures are described in the attached analytical and geotechnical laboratory QA Manuals in Attachments B and C, respectively.

Sample Identification Procedures:

The method of identification of a sample depends on the type of measurement or analysis performed. When field screening measurements (e.g., pH, dissolved oxygen, or turbidity) are made, data are recorded directly in logbooks or on field investigation forms. Identifying information such as project name, station number, station location, date and time, name of sampler, field observations, remarks, or other pertinent information will be recorded.

Samples collected for laboratory analysis during the field investigation will be specifically designated by BC personnel for unique identification. Each sample will be designated by an alpha-numeric code which will identify the sampling location, type or as necessary depth.

Worksheet #27 (Continued): Sample Custody Requirements

The three codes that make up the sample identifier are described as follows:

1. The Site name – MR – Mercury Refining Superfund Site

2. The medium/sample type codes are listed below:

   MW - Groundwater sample taken from a monitoring well;
   CB – Catch Basin sample;
   SED – Sediment sample;
   DW – Drummed waste sample;
   W – Waste sample;
   SB – soil boring sample;
   S – Soil sample
   SV – Soil Vapor sample
   FT – Fish Tissue sample
   GT – Geotechnical boring sample
   TB – Trip Blank;
   FB – Field Blank sample;
   DUP – Duplicate sample; and
   MS/MSD – Matrix Spike/Matrix Spike Duplicate sample.

3. The location code will be keyed to the specific sample designation.

The following is an example of a sample identifier that will be used for samples collected for geotechnical laboratory analysis:

MR-SB-48B-10-12: indicating that the soil sample was collected from the second boring at soil boring location MR-SB-48 from a depth of 10 to 12 feet below ground surface.

Worksheet #27 (Continued): Sample Custody Requirements

Chain-of-Custody Procedures:

A completed COC form must be included with all sample transfers/shipments.

Geotechnical samples will be shipped to GeoTesting Express in Boxborough, MA by BC personnel. Prior to delivery, the samples will be stored in a secure location. Filled Shelby tubes will be stored oriented properly with the "up" arrow pointed up.

When analytical samples are being shipped by an overnight delivery service to the laboratory, the COC form and any other paperwork will be checked against the sample labels and field documentation, and then placed in a waterproof sealable plastic bag and taped securely to the inside lid of the cooler. The cooler must then be secured, with custody seals affixed over the lid opening in at least two locations, and the cooler wrapped with strapping tape (without obscuring the custody seals). Orientation "this end up" arrows will be drawn or attached on two sides of the cooler, and a completed overnight delivery service shipping label will be attached to the top or handle of the cooler. Wide, clear tape should be used to secure the label to the lid of the cooler to prevent the shipping address label from being accidentally peeled off the cooler top.

Samples to be shipped by an overnight delivery service will be shipped within 24 hours of sample collection and arrive at the laboratory within 24 hours of sample shipment. A member of the field team will contact the laboratory directly, to notify them of a sample shipment, and again the next day to confirm receipt. In addition, an electronic version of the COCs will be sent to the laboratory either electronically or by facsimile.

If the laboratory is going to courier the samples directly from the site or the samples are being delivered directly to the laboratory by BC, the COC form will not be placed inside the cooler. The COC form must be signed by the receiver (e.g., the laboratory courier, or the laboratory sample custodian) when he/she accepts possession of the samples.

Worksheet #28: QC Samples Table

Matrix	Water/Soil
Analytical Group	ICP Metals
Analytical Method/ SOP Reference	

QC Sample:	Frequency/Number	Method/SOP QC Acceptance Limits	Corrective Action	Person(s) Responsible for Corrective Action	Data Quality Indicator (DQI)	Measurement Performance Criteria
Calibration blank (CCB)	After CCV, after every 10 samples, and at the end of the sequence	No target analytes > RL. If CCB is biased high and associated samples are below the RL the data can be reported.	Correct the problem and reanalyze the blank and previous samples associated with CCB.	Group Leader / Analyst	Accuracy	No target analytes > 2x MDL
MDL study	After initial setup and once per 12-months; otherwise quarterly MDL verification checks shall be performed.	MDLs will be below the RLs.	Have laboratory use another facility or subcontract if MDLs do not meet project objectives	Group Leader / Analyst	Sensitivity	MDLs will be below the RLs
Method blank	One per digestion batch	No target analytes > RL. For common laboratory contaminants, no analytes > 2x RL. If MB is biased high and associated samples are below the RL or 20x the blank the data is accepted.	Re-analyze. Correct problem, then re-prepare and reanalyze the method blank and all samples processed with the contaminated blank.	Group Leader / Analyst	Accuracy / Bias contamination	No target analytes > ½ RL
Interference check solution (ICS)	At the beginning of an analytical run	ICSA: For non-interfering elements with RL/s less than 10, must fall within 2x the RL from zero. For RL's >10 must fall within 1x RL from zero. If not evaluate run based on lab SOP.	Terminate analysis, correct problem, then reanalyze ICS and all effected samples.	Group Leader / Analyst	Accuracy	Within ±20% of expected value.
MS	One MS per preparation batch	QC acceptance criteria: 80% to 120% accuracy, 20% precision; or laboratory statistically derived control limits.	Flag data with N	Group Leader / Analyst	Accuracy	QC acceptance criteria: 80% to 120 % accuracy, 20% precision or laboratory statistically derived control limits.

Worksheet #28 (Continued): QC Samples Table

Matrix	Water/Soil
Analytical Group	ICP Metals
Analytical Method/ SOP Reference	

QC Sample:	Frequency/Number	Method/SOP QC Acceptance Limits	Corrective Action	Person(s) Responsible for Corrective Action	Data Quality Indicator (DQI)	Measurement Performance Criteria
MSD or sample duplicate	One per preparation batch	RPD < or equal to 20%	Flag data with N	Group Leader / Analyst	Precision	RPD < or equal to 20%
LCS	One LCS per each preparation batch	Laboratory statistically derived control limits: 80% to 120% accuracy. Or in house limits. If the LCS is biased high and the associated samples are ND the data can be reported.	Terminate analysis, identify and correct the problem, then re-prepare and reanalyze all affected samples and QC.	Group Leader / Analyst	Accuracy	QC acceptance criteria: 80% to 120% accuracy, 20% precision or laboratory statistically derived control limits.
Dilution test	Each preparation batch or when a new sample matrix is encountered.	1:5 dilution must agree within ±10% of the original determination.	Flag data with an E.	Group Leader / Analyst	Accuracy	10% Difference.

Worksheet #29
Project Documents and Records Table

Sample Collection Documents and Records	On-site Analysis Documents and Records	Off-site Analysis Documents and Records	Data Assessment Documents and Records	Other
o Field logbooks o COC forms o Field sample forms	o COC forms o Logbooks (instrument calibration, trouble-shooting, sample log-in) o Field sample forms	o Sample receipt logs o Internal and external COC forms o Equipment maintenance logs o Corrective action documentation o Laboratory analysis documents (reports, electronic deliverables)	o Field inspection checklist(s) o Data review/validation documentation o Review forms for electronic entry of data into database o Corrective action documentation	o RDI Report o Treatability Study Report o Preliminary Design Report o Final Design Report

Worksheet #30
Analytical Services Table

Matrix	Analytical Group	Concentration Level	Sample Locations/ID Numbers	Analytical SOP	Data Package Turnaround Time	Laboratory/Organization (Name and Address, Contact Person and Telephone Number)	Backup Laboratory/Organization (Name and Address, Contact Person and Telephone Number)
Water/Soil	Metals	Not limited beyond MDL.	See QAPP Figures 2 and 4.	SW-846 and Laboratory QA/QC manual.	Standard TAT; 24 hour verbals on preliminary screening in ISS area.	TestAmerica Buffalo 10 Hazelwood Dr. Amherst, NY 14228 Contact: James Stellrecht Phone: 716-504-9800	NA
Soil/Sediment	TCLP Metals	Not limited beyond MDL.	See QAPP Figures 2, 3 and 4.	SW-846 and Laboratory QA/QC manual.	Standard TAT	TestAmerica Buffalo 10 Hazelwood Dr. Amherst, NY 14228 Contact: James Stellrecht Phone: 716-504-9800	NA
Sediment	Methyl Mercury	Not limited beyond MDL.	See QAPP Figures 3 and 4.	SW-846 and Laboratory QA/QC manual.	Standard TAT	TestAmerica North Canton 4101 Shuffel Street, NW, North Canton, OH 44720 Contact: James Stellrecht Phone: 716-504-9800	NA
Fish Tissue	Mercury	Not limited beyond MDL.	See QAPP Figure 4	BF-ME-001	Standard TAT	TestAmerica North Canton 4101 Shuffel Street, NW, North Canton, OH 44720 Contact: James Stellrecht Phone: 716-504-9800	NA
Soil Vapor	Mercury	Not limited beyond MDL.	See	FGS 136.01 FGS-009.3	Standard TAT	Frontier Geosciences, Inc. 414 Pontius Avenue North Seattle, WA 98109	NA
Soil	Geotechnical	NA	See QAPP Figure 2.	See Worksheet #23	Standard TAT	GeoTesting Express 1145 Massachusetts Avenue Boxborough, MA 01719 Contact: Gary T. Torosian Phone: 978-635-0424	NA

Worksheet #31
Planned Project Assessments Table

Assessment Type	Frequency	Internal or External	Organization Performing Assessment	Person(s) Responsible for Performing Assessment (Title and Organizational Affiliation)	Person(s) Responsible for Responding to Assessment Findings (Title and Organizational Affiliation)	Person(s) Responsible for Identifying and Implementing Corrective Actions (CA) (Title and Organizational Affiliation)	Person(s) Responsible for Monitoring Effectiveness of CA (Title and Organizational Affiliation)
Data review	Upon receipt of all data	Internal	TestAmerica Buffalo	Peggy Gray-Erdmann, QA Manager for TestAmerica Buffalo	Senior Chemist for affected laboratory procedure – TestAmerica Buffalo	Jen Pierce, Laboratory Manager, TestAmerica Buffalo	Peggy Gray-Erdmann, QA Manager, TestAmerica Buffalo
Data review	Upon receipt of all data	Internal	GeoTesting Express	Gary Torosian, QA Officer for GeoTesting Express	Senior analyst for affected laboratory test – GeoTesting Express	Gary Torosian, QA Officer,GeoTesting Express	Gary Torosian, QA Officer, GeoTesting Express
Data review	Quarterly	External	Brown and Caldwell	Greg Cole, Quality Assurance Officer, BC	Quality Assurance Officer, BC	Tamara Sorell, Ph.D., BC	Tamara Sorell, Ph.D., BC
Readiness Review	Once during RDI	Internal	Brown and Caldwell	Frank Williams, PG, BC	Frank Williams, PG, BC	Frank Williams, PG, BC	Tamara Sorell, Ph. D., BC
Field Sampling TSA	Once during RDI	Internal	Brown and Caldwell	Frank Williams, PG, BC	Frank Williams, PG, BC	Frank Williams, PG, BC	Tamara Sorell, Ph. D., BC
Health and Safety Audit	Once during RDI	Internal	Brown and Caldwell	Tamara Sorell, Ph. D., BC	Cathy Trent, PE, Health and Safety Officer, BC	Frank Williams, PG, BC	Tamara Sorell, Ph. D., BC

Worksheet #32
Assessment Findings and Corrective Action Responses

Assessment Type	Nature of Deficiencies Documentation	Individual(s) Notified of Findings (Name, Title, Organization)	Timeframe of Notification	Nature of Corrective Action Response Documentation	Individual(s) Receiving Corrective Action Response (Name, Title, Org.)	Timeframe for Response
Review field records	Sample collection methods will yield unusable results	David Rosenblatt, Esq.,"The Group" representative and USEPA (Tom Taccone)	14 days after finding	In writing via e-mail	David Rosenblatt, Esq.,"The Group" representative and USEPA (Tom Taccone)	As indicated in CA response
Review field records	Scheduled sample not collected	David Rosenblatt, Esq.,"The Group" representative and USEPA (Tom Taccone)	14 days after finding	In writing via e-mail	David Rosenblatt, Esq.,"The Group" representative and USEPA (Tom Taccone)	As indicated in CA response
Qualitative laboratory data review	Inappropriate analytical/testing methods yield unusable result	David Rosenblatt, Esq.,"The Group" representative and USEPA (Tom Taccone)	14 days after finding	In writing via e-mail	David Rosenblatt, Esq.,"The Group" representative and USEPA (Tom Taccone)	As indicated in CA response
Field Audit	Field Audit Checklist (see Attachment A-3)	Field Team Leader; Site Supervisor, Project Manager	Immediately for significant excursions within 7 business days for minor or administrative issues	In writing via e-mail (form attached)	Field Team Leader; Site Supervisor, Project Manager	As indicated in CA response
Health and Safety Audit	H&S Audit Checklist (see Attachment A-3)	Project Manager; Site Supervisor; Health and Safety Contingency Plan Manager	Immediately for significant excursions within 7 business days for minor or administrative issues	In writing via e-mail (form attached)	Field Team Leader; Site Supervisor, Project Manager; Health and Safety Contingency Plan Manager	As indicated in CA response

Worksheet #33
QA Management Reports Table

Type of Report	Frequency (daily, weekly monthly, quarterly, annually, etc.)	Projected Delivery Date(s)	Person(s) Responsible for Report Preparation (Title and Organizational Affiliation)	Report Recipient(s) (Title and Organizational Affiliation)
Preliminary Remedial Design	Draft and Final	As per the RD AOC and SOW	Jeffrey Caputi., BC	David Rosenblatt, Esq., "The Group" representative and USEPA (Tom Taccone)
Final Remedial Design	Draft and Final	As per the RD AOC and SOW	Jeffrey Caputi., BC	David Rosenblatt, Esq., "The Group" representative and USEPA (Tom Taccone)
Field Audit Checklist	Once near start of each major field program (e.g., Remedial Design Investigation)	See Worksheet #32	See Worksheet #32	See Worksheet #32
Health and Safety Audit Checklist	Once during each major field program (e.g., Remedial Design Investigation)	See Worksheet #32	See Worksheet #32	See Worksheet #32

Worksheet #34
Verification (Step I)[1] Process Table

Verification Input	Description	Internal/ External	Responsible for Verification (Name, Organization)
Field logbook entries	Field notes will be reviewed for completeness	Internal	Frank Williams, BC
Chains-of-Custody	COC forms will be reviewed for completeness	Internal	Frank Williams, BC
Laboratory analytical/testing data package	Data packages will be reviewed for completeness	Internal	Greg Cole,, BC
Laboratory QA/QC data package	Data packages will be reviewed for completeness	Internal	Greg Cole, BC
Database	Database will be reviewed for completeness and technical accuracy	Internal	Greg Cole, BC

(1)Please see QAPP (Appendix A) for details concerning the data review/verification procedures

Worksheet #35
Validation (Steps IIa and IIb) Process Table

Step IIa/IIb	Validation Input	Description	Responsible for Validation (Name, Organization)
IIa	SOPs	Verify that sampling methods/procedures were followed, and that deviations were noted/approved.	Frank Williams, BC
IIb	SOPs	Determine potential impacts from noted/approved deviations, in regard to PQOs.	Frank Williams, BC
IIa	Chains of Custody	Examine COC forms against QAPP and laboratory contract requirements (e.g., analytical methods, sample identification, etc.).	Greg Cole, BC
IIa	Laboratory data package	Examine packages against QAPP and laboratory contract requirements, and against COC forms (e.g., holding times, sample handling, analytical methods, sample identification, data qualifiers, QC samples, etc.).	Greg Cole, BC
IIb	Laboratory data package	Determine potential impacts from noted/approved deviations, in regard to PQOs. Examples include PQLs and QC sample limits (precision/accuracy).	Greg Cole, BC
IIb	Field and lab duplicates	Compare results of field duplicate (or replicate analyses with RPD criteria.	Greg Cole, BC

Step IIa – Compliance with methods, procedures, and contracts
Step IIb – Compliance with QAPP quality objectives

Worksheet #36
Validation (Steps IIa and IIb)[1] Summary Table

Step IIa/IIb	Matrix	Analytical Group	Concentration Level	Validation Criteria	Data Validator (title and organizational affiliation)
a / IIb	Inclusive	Inclusive	Inclusive	Data quality review will be performed in accordance with EPA Region 2 RCRA and CERCLA Field and Data Validation SOPs. Specifically, mercury data will be reviewed using SOP HW-2 Rev.13, ILM05.3, "Evaluation of Metals Data for the CLP Program," September 2006	Greg Cole, BC

(1)Please see QAPP Appendix A for details concerning the data review/verification procedures
Step IIa – Compliance with methods, procedures, and contracts
Step IIb – Compliance with QAPP quality objectives

Worksheet #37
Usability Assessment

Evaluative Procedures:

Analytical results will be evaluated with respect to QA assessment and their ability to satisfy project objectives. Project-specific objectives for chemical analysis appear in Worksheet #s 12 and 15. Detailed review criteria appear in the EPA Data validation SOPs referenced in Worksheet #36.

Personnel Responsible for Performing the Usability Assessment:

Greg Cole, Quality Assurance Officer, BC
Tamara Sorell, Quality Assurance Manager, BC

Usability Assessment Documentation:

Laboratory summary reports, including Case Narratives
Laboratory QA reports
A brief narrative describing data review and data usability will be presented in the final RI and Treatability Study reports.

Summarize the usability assessment process and all procedures, including interim steps and any statistics, equations, and computer algorithms that will be used:
Usability will entail an evaluation of the data with respect to determinations of 1) site attributability; 2) nature and extent of contamination; and 3) exceedances of regulatory criteria. Note that usability is distinguished from validation in that excursions of specified methods or SOPs that trigger validation flags will not necessarily render the data unusable for the project goals; the data may still be of sufficient quality to reach a determination as to the presence of the analyte, or the analyte may be of minimal importance to the project based on known information. Conversely, adherence to protocols and methods do not guarantee usable data. An example is an elevated reporting limit due to matrix interference that may be beyond the laboratory's control and consistent with dilutions permitted in the method, but still result in data that cannot be reliably compared with project objectives.

Describe the evaluative procedures used to assess overall measurement error associated with the project:
Variability and error in analytical results will be assessed based on the results of the field quality control samples (Worksheet #20) and the laboratory QC samples (Worksheet #12).

ATTACHMENT A-1

Résumés

Experience Summary

Mr. Caputi has 22 years of experience in environmental consulting focusing primarily on site remediation and regulatory compliance. He has managed the investigation and remediation of numerous industrial and hazardous waste sites regulated under CERCLA, RCRA, TSCA and various State programs. Mr. Caputi's work has encompassed the full range of remedial activities from site investigation, feasibility studies and remedy selection through design, construction, operations and remedy review. He is experienced in site investigations, risk assessments, feasibility studies, treatability studies, remedial action plans, remedial design, demolition and decommissioning, closure/post closure, permitting, audits, cost estimating, contractor procurement, construction management, construction quality assurance, operation and maintenance, remedy reviews, regulatory agency negotiations, community relations and site redevelopment.

Assignment

Principal in Charge

Assignment

M.S. Environmental Engineering (minor Toxicology) New Jersey Institute of Technology, 1987

B.S. Environmental Engineering Technology, New Jersey Institute of Technology, 1983

Registrations

Registered Professional Engineer, Pennsylvania (PE-048454-E)

New York (082196)

Connecticut (24493)

Licensed Site Professional, Massachusetts (9325)

Licensed Environmental Professional, Connecticut (219)

Cleanup Star, New Jersey

Certifications

Certified Hazardous Materials Manager

Qualified Environmental Professional

OSHA Hazardous Site Training, OSHA Hazardous Site Supervisor Training

Experience

20 Years

Joined Firm

1990

Hazardous Waste/Remediation

RFI/CMS/CMI at a Former Pigments Manufacturing Plant, New York State

Project Manager/Director. RCRA Facility Investigation (RFI) and a Corrective Measures Study (CMS) at a 50-acre facility containing multiple regulated units, solid waste management units, and off-site areas of concern. The principal constituents of concern were heavy metals including chromium, cadmium, lead, mercury and others. Evaluated a variety of containment and removal/treatment based technologies and alternatives for the various SWMUs/AOCs. Selected cost-effective corrective measures that included a RCRA cap over a 5-acre corrective action management unit (CAMU), a sheet pile barrier wall along the property boundary of the CAMU, groundwater extraction at the downgradient facility boundary and pre-treatment with discharge to the POTW, soil cover over the remainder of the main plant site, targeted sediments removal from the river and wetland areas with on-site disposal, targeted soil removal from adjacent residential properties with on-site disposal, and installation of a geotextile/stone cover on the bottom of an adjacent pond. Served as project director and provided technical review for the design and implementation of the corrective measures. Represented the client in permit negotiations with the regulatory agencies.

RCRA Closure, Confidential Client, New York

Project Manager. Closure and corrective action program at a hazardous waste facility. Supervised closure operations, prepared closure certification report, and prepared RCRA Part B permit application for a surface impoundment used to treat electroplating wastewaters and other hazardous wastes. Developed a post-closure care plan and compliance monitoring program for the regulated unit. Developed and implemented a corrective action program for a solid waste management unit. The corrective measures included recovery of groundwater contaminated with chlorinated solvents, treatment by air stripping, and an effectiveness monitoring program. Also, prepared NPDES and air permit applications for the treatment system.

RI/FS Work Plans & Remedial Action Plans, Various Clients, Various Locations

Project Manager. Prepared work plans for remedial investigations, feasibility studies, and/or remedial designs at more than two dozen industrial facilities and landfill sites in New York, New Jersey, Pennsylvania, Massachusetts, and Ohio. Experienced in the regulatory requirements and agency guidance under RCRA, CERCLA, TSCA, and the various State programs.

Plant Closure/Site Remediation, Confidential Client, New York

Project Manager. Assessment and cleanup of a wire insulating plant. Collected samples of waste liquids and sludges, reviewed analytical data and regulatory requirements, and recommended measures for cleanup and disposal of waste materials and storage tanks. Conducted follow-up investigations to address leaking underground storage tanks and conducted a technology evaluation for the remediation of soils contaminated with spent solvents subject to land disposal restrictions.

Pre-Design Investigation, Treatability Study, Feasibility Study and Remedy Selection, Area 2, Troy (Water Street) Former MGP Site, Troy, New York

Project Manager/Director. Reviewed the RI/FS for Area 2 of the former MGP site and provided comments on the Proposed Remedial Action Plan which resulted in modifications to the proposed remedy that substantially reduced the extent of excavation and off-site treatment. Project director for a pre-design investigation (PDI) and treatability study. The PDI included investigation of above- and below-ground pipes, tanks, and other MGP structures, additional delineation of the areas designated for removal/treatment, evaluation of BTEX plumes associated with MGP wastes and petroleum products spilled during post-MGP storage and distribution operations, evaluation of the potential exposure of building occupants to VOCs present in sub-slab soil gas, and forensic testing and analysis of NAPL and impacted soils to identify petroleum and other non-MGP wastes resulting from usage of the site after cessation of MGP operations. A significant component of the PDI at the Area 2 site has been the ongoing evaluation of in situ chemical oxidation (ISCO) technologies for destruction of organic MGP constituents greater than 18 feet below surface. An extensive bench scale treatability study of MGP-impacted soils and groundwater from the site is being performed. Field pilot testing of the appropriate oxidant will be implemented upon completion of the bench scale testing.

Pharmaceutical/Specialty Chemicals Plant, Harriman, New York

Project Principal. The Site was used for the manufacture of pharmaceutical and specialty chemicals from 1942 to 2005. The property owner's goal was to transfer ownership and liabilities to a developer. Brown and Caldwell conducted a comprehensive investigation that included the collection of over 350 soil samples from beneath the 72 solid waste management units (SWMUs); six treatment, storage and disposal units (TSDs); and other areas of the site that warranted investigation based upon

a review of historical operations and spills. The primary constituents of concern included mercury, PCBs, BTEX, pyridine and related compounds. Additional testing was conducted to assess the mobility and bioavailability of mercury, and confirmed that the mercury at the Site exists in a relatively immobile form. Statistical analysis demonstrated that the findings were consistent with those of the previous investigations and were not indicative of any new or previously unidentified releases attributable to the inaccessible SWMUs, TSDs underground sewers or other areas. This supported a site-wide remedial approach rather than separately addressing numerous individual areas. Brown and Caldwell evaluated remedial scenarios that supported site redevelopment and developed cost estimates to support negotiations. The property, including environmental liabilities, was successfully transferred to a redevelopment firm. Brown and Caldwell is currently performing the Corrective Measures Study on behalf of the new property owner.

Feasibility Study, Sediments Operable Unit, Troy (Water Street) Former MGP Site, Troy, New York

Project Director. Preliminary feasibility study (FS) for the Hudson River sediments impacted by former MGP operations at the site. A number of key, related data needs were identified that are essential to the characterization of the subject area and the development and evaluation of remedial alternatives. Because of the need to submit a FS to satisfy a consent order deadline, a preliminary FS was prepared that included those components of the FS that could be completed in the absence of the additional data. Prepared a work plan for the additional data collection to address: identification of samples which contain polycyclic aromatic compounds (PAHs) that are MGP-related and distinguishing them from those which do not; an assessment of the bioavailability of PAHs in sediments; an evaluation of upland sources, and of currently proposed or ongoing control activities of these upland sources, and their influence on the rate of natural recovery of PAH-impacted sediments in the river; and an evaluation of whether or not sediments, if removed, would need to be managed as a hazardous waste. Upon collection of the additional data, the remaining components of the FS will be completed and a final FS Report will be prepared.

RFI/CMS at an Explosives Manufacturing Plant, New York State

Project Manager/Director. Prepared pre-investigation evaluation of corrective measure technologies and Corrective Measures Study (CMS) for the remediation of soil, groundwater, and wetland sediments at an explosives manufacturing facility. The principal constituents of concern were heavy metals and chlorinated solvents. Evaluated a variety of containment and removal/treatment based technologies and alternatives for the various SWMUs/AOCs. Selected cost-effective corrective measures that included monitored natural attenuation for groundwater, targeted excavation for certain SWMUs/AOCs, capping and institutional controls. Represented the client in permit negotiations with the regulatory agencies.

Remedial Design, Diamond Alkali Superfund Site, Newark, New Jersey

Project Manager. Remedial design for a former pesticides manufacturing site to address dioxin and numerous other constituents in soil and groundwater. The remedy included a slurry trench cutoff wall, flood wall, cap, ground-water withdrawal and treatment system, stabilization of containerized wastes, demolition of structures, and decontamination of steel for off-site recycling. Responsible for schedule, budget, and technical quality of the design documents, including plans, specifications, SAMP, QAPP, SMP, HASP, construction operations plan, operation and maintenance plan, and permit applications. Developed an innovative mix design for the cutoff wall to achieve required permeability, while simplifying construction operations. Conducted a long-term compatibility study to assess the effects of site groundwater on cutoff wall performance.

Remedial Design, Kodak Park West, Eastman Kodak Company, Rochester, New York

Project Engineer. Design of a groundwater migration control system. The design included creating an enhanced zone of hydraulic conductivity in the bedrock aquifer by controlled subsurface blasting and recovery of contaminated groundwater by pumping wells. Compiled and evaluated design-related data relative to existing buildings, utilities, plant operations, and groundwater quality. Prepared engineering report describing the design basis, design details, and operation, maintenance, and monitoring procedures.

Memberships

American Society of Civil Engineers

Academy of Certified Hazardous Materials Managers

Licensed Site Professionals Association

Environmental Professionals Organization of Connecticut

Chemistry Council of New Jersey

Commerce and Industry Association of New Jersey

Publications

"Demonstration of In Situ Thermal Desorption for Remediation of a Former MGP Site," R. S. Baker, J.R. Caputi and M. Lotti, Gas Technology Institute Conference, Orlando, Florida, October 2006.

"New Technologies for Subsurface Barrier Wall Construction," R. D. Mutch, Jr., R. E. Ash IV and J. R. Caputi, Proceedings of the 14th Annual Environmental Management and Technology Conference International, Atlantic City, New Jersey, June 1996.

"Advancements in Subsurface Barrier Wall Technologies," R. D. Mutch, Jr., R. E. Ash IV and J. R. Caputi, Superfund '95, Washington, D.C., November 1995.

"The Impact of Land Disposal Restrictions on Hazardous Waste Site Cleanups," J. R. Caputi, Proceedings of the 22nd Mid-Atlantic Industrial Waste Conference, Philadelphia, Pennsylvania, July 1990.

"Treatment of VOC-Contaminated Ground Water by Air Stripping," J. R. Caputi, R. F. Raczko and S. A. Smiriglio, Proceedings of the 60th Water Pollution Control Federation Conference, Philadelphia, Pennsylvania, October 1987.

TERESA M. CAPUTI

Experience Summary

Ms. Caputi is an environmental scientist with extensive experience in the field of ecological risk assessment. She has conducted baseline, screening level and detailed ecological risk assessments under various federal and state programs. Ms. Caputi has also conducted vegetation and wildlife inventories of terrestrial and wetland systems, as well as wetland delineations. Other work has included environmental impact statements, environmental planning and permitting, environmental site assessments, field sampling, data management and report preparation.

Assignment

Quality Assurance

Education

B.S. Environmental Science, St. John's University, Queens, New York, 1983

Experience

17 years

Joined Firm

February 2009

Certifications

- *40-Hour HAZWOPER Training*
- *OSHA 8-Hour Training for Supervisor*
- *OSHA 10-Hours Construction Safety*
- *Certified for Adult CPR*

Masada Resource Group, Middletown, New York

Environmental Scientist. Managed preparation of a SEQR Environmental Impact Statement (EIS) for a proposed waste-to-ethanol facility. Prepared and submitted environmental permit applications and assisted in Part 360 closure of an on-site former municipal landfill on New York State's Inactive Hazardous Waste Sites List. Performed a wetland delineation for the site and prepared a Wetlands Delineation Report for submittal to the U.S. Army Corps of Engineers.

New Jersey Water Supply Authority, Wall Township, New Jersey

Environmental Scientist. Prepared Corps of Engineers wetlands permit, stream encroachment permit, waterfront development permit and other related permit applications for a proposed water treatment plant and transmission system. Assisted in preparation of an Environmental Impact Statement for this project.

The Port Authority of New York and New Jersey, Queens, New York

Environmental Scientist. Conducted the ecological risk assessment portion of the Health Risk Assessment which evaluated the potential health risks to human beings and the surrounding ecology that might result from contaminated soil and groundwater beneath or migrating from the Central Terminal Area (CTA) at JFK International Airport. This assessment analyzed current and future "baseline" risks without any major actions to control or mitigate site contamination, estimated the health risk impact of redevelopment at the CTA, and also developed information to help determine whether any remediation was needed.

U.S. Army Corps of Engineers, Camden, New Jersey

Environmental Scientist. Developed sediment sampling strategy and prepared planning documents for a radiologically-contaminated site. Oversaw sediment sampling activities and prepared a Field Investigation Summary Report.

U.S. Army Corps of Engineers, Kansas City District

Environmental Scientist. Prepared a 30-year biological monitoring plan for post-remediation of the Marathon Battery hazardous waste site. The plan included sampling of water, sediment, fish, mammals and invertebrates in a freshwater tidal marsh and cove associated with the Hudson River.

Also conducted a vegetation analysis and sediment sampling for various portions of this project.

U.S. Environmental Protection Agency, New Jersey and New York
Environmental Scientist. Conducted ecological risk assessments for nearly 20 Superfund sites in New York, New Jersey and Connecticut. Assessments were conducted pursuant to Federal Guidelines as well as New York State's "Fish and Wildlife Impact Analysis for Inactive Hazardous Waste Sites" Guidance.

Westage Development Group, Inc. Fishkill, New York
Environmental Scientist. Project leader for the preparation of an Environmental Impact Statement, pursuant to SEQR, for a proposed townhouse development.

ICI Americas, Inc. Bayonne, New Jersey
Environmental Scientist. Conducted an ecological risk assessment for a chemical manufacturing facility in Bayonne, New Jersey.

Irondequoit Bay Pure Waters District, Monroe County, New York
Environmental Scientist. Conducted a wetland delineation along the route of a proposed sanitary sewer line, and prepared a Wetlands Delineation Report for this project. The project consisted of approximately 11,000 linear feet of sanitary sewer and was located within agricultural districts, parkland and a New York State regulated wetland.

Metro North Commuter Railroad Co., Croton-on-Hudson, New York
Environmental Scientist. Project leader and primary preparer of an environmental assessment for replacement of a car bridge over Metro-North railroad tracks. The assessment was prepared pursuant to Urban Mass Transportation Administration (UMTA) guidelines.

New York City Department of Parks and Recreation, Bronx, New York
Environmental Scientist. Directed a biological sampling program and prepared the environmental assessment report for a tidal marsh area in Pelham Bay Park. Work included sampling for intertidal zone flora and fauna and evaluation of the overall ecological health of the area.

Cogentrix Energy, Inc., Peabody, Massachusetts
Environmental Scientist. Performed a Fatal Flaws Analysis for a potential development, construction ownership and operation of a 250 MW gas-fired turbine combined cycle plant in Massachusetts. The objective of the analysis was to identify significant site, community, regulatory and public issues/concerns that may have an impact on the successful completion of the project, particularly during the development phase.

Michigan Department of Natural Resources, Michigan
Environmental Scientist. Developed sediment quality objectives for an eight-mile stretch of the South Branch Shiawassee River, contaminated with PCBs.

Experience Summary

Mr. Cole has 23 years of experience in environmental chemistry, project management, data management, and site assessment. He is knowledgeable of EPA methods for the analysis of air, soil, water, and waste. His breadth of experience includes organic, inorganic, and radioanalytical chemistry methodology. He provides assistance for projects throughout the company on chemistry-related issues such as fate and transport of different chemical compounds and fuel fingerprinting. Greg performs data validation and laboratory audits to ensure that laboratory data are accurate and defensible. He has extensive knowledge of hydrocarbon analysis including the identification and quantitation of specific fuels and oils. He provides chemistry and data management support to project teams performing remedial investigations, engineering evaluation/cost analyses, and groundwater monitoring. Greg interprets laboratory data and makes recommendations for further sampling to ensure proper site evaluation. He has extensive environmental analytical laboratory experience performing analyses and supervising laboratory personnel. He has supervised a fuels analysis laboratory ensuring that samples were properly analyzed and results were accurately reported. Greg has investigated fuels contaminated groundwater sites to determine the source of contamination when multiple sources were possible. His extensive experience includes field sampling and sampling oversight, laboratory selection and oversight, data and site evaluation, report writing, and project management.

Assignment

Quality Assurance

Education

B.S., Psychobiology (with Chemistry Minor), University of California at Los Angeles, Los Angeles, CA, 1983

Experience

23 years

Special Training

40-hour OSHA Health & Safety HAZWOPER Training, 1997

8-hour HARWOPER Supervisor/Site Safety Officer Training, 2003

8-hour Refresher OSHA Training, 1998, 1999, 2000, 2001, 2003, 2005

Adult CPR Training, 1997, 1998, 1999, 2000, 2001, 2003, 2005

Standard First Aid Training, 1997, 1998, 2000, 2003, 2005

3-hour Work Zone Safety Training, 1999

Total Quality Management Training, 1996

Title 22 Hazardous Waste Generator Training, 1995

DOT HM-181/Performance Oriented Packaging Training, 1995, 1999

DOT HM-126F/HazMat Employee Training, 1995

TQM 40-hour Training, 1991

Joined Firm

2002

Benicia Arsenal Investigation, U.S. Army Corps of Engineers (USACE), Sacramento District, Benicia, California

Program Chemist. Greg was responsible for oversight of the environmental testing laboratories including technical systems audits. He oversaw subcontracted activities for data verification and third party validation. He worked with a USACE-sponsored automated data review tool developed by Laboratory Data Consultants for review of data produced for this project. Greg participated in the development and review of multiple project specific field site investigation plans and project reports. He wrote multiple quality control summary reports.

Regional Water Supply Plan, Turlock Irrigation District, Turlock, California

Project Chemist. The BC team is currently evaluating appropriate treatment technologies for the anticipated raw water quality as well as analyzing cost effective routing for pipelines to each of the communities. Subsequent phases of the project will include a pilot study to refine the process selection, water quality monitoring and sanitary survey, final design for the raw water system, and final design for the new treatment plant and transmission components of the project.

State Route 73 Detention Basin Monitoring, Caltrans, Orange County, California

Program Chemist and Data QA/QC. Greg provided recommendations for program changes and oversight of stormwater data analysis for this large stormwater monitoring project. He interfaced with ATL Laboratories and evaluated QA/QC for project data.

Relevant Expertise

- *Environmental chemistry*
- *Data management*
- *Site assessment*

Red Bluff National Guard Armory Groundwater Monitoring, U.S. Army Corps of Engineers, Sacramento District, Red Bluff, California

Project Manager. Greg has been managing groundwater monitoring and reporting for the Red Bluff Armory site since 2002. Activities include quarterly sampling and reporting, an annual report, and a Quality Control Summary Report. He is performing all data verification and analysis for the project. He is also working to get site up-to-date with State Geotracker requirements.

Crystal Cove State Beach Park Stormwater Monitoring, Caltrans, Laguna Beach, California

Program Chemist and Data QA/QC. Greg provided oversight of stormwater data analysis for this project. He interfaced with ATL Laboratories and evaluated QA/QC for project data.

Red Bluff National Guard Armory Free Product Removal, U.S. Army Corps of Engineers, Sacramento District, Red Bluff, California

Project Manager. Greg is conducting free product removal for the Red Bluff Armory site. His responsibilities include meeting with California Regional Water Quality Control Board Central Valley Region and free product removal activities. He is performing all data verification and analysis for the project.

Groundwater Investigation, Confidential Air Force Base, California

Project Manager. Greg is managing groundwater investigation at an Air Force Base former gas station site. The activities include writing site investigation and assessment reports, quarterly monitoring and reporting, and interfacing with regulatory agencies. He is performing all data verification and analysis for the project. The site will advance to closure under Regional Board guidelines.

Turlock Irrigation District, Water Supply Study, Turlock, California

Project Chemist and QA/QC Officer. This project involved extensive analyses of surface water samples to determine if the source river water is acceptable as a drinking water source. Greg was responsible for procuring laboratories and acted as the laboratory contact. Greg also evaluated all analytical results for usability and was heavily involved in writing and reviewing the QAPP and monitoring plan for this project.

Open Burn/Open Detonation Area Closure Project for Camp Navajo, State of Arizona Army National Guard, Bellemont, Arizona

QC Manager. Greg was responsible for conducting or managing audits of field and laboratory activities, validation of field and analytical data, and audits of data processing and file maintenance.

Diesel Spill Investigation and Cleanup, Gulf Insurance Company, Navarro, California
Project Chemist. The investigation and cleanup for a 4,000-gallon diesel spill site in rural Mendocino County. The project involves remediation system design, implementation of temporary remedial actions, documentation of all activities, acquisition of access to implement investigation and remedial actions, and installation and operation of remedial systems for contaminants including diesel and MTBE.

Jacobs Engineering Group Inc., Sacramento, California
Senior Chemist. Greg was responsible for oversight of chemistry and data management functions for the U.S. Army Corps of Engineers Sacramento District's Benicia Arsenal project.

Jacobs Engineering Group Inc., Sacramento, California
Senior Chemist. Greg was responsible for providing chemistry and data management support to field sampling teams and project management. This required strong knowledge of organic, inorganic, and radioanalytical chemistry laboratory methods. He trained chemists and data managers to perform tasks related to processing field and laboratory data. He met with clients and regulators to determine initial project requirements and/or resolve comments and concerns. He wrote Data Quality Assessments, Field Sampling Plans (FSPs), Remedial Investigation Characterization Summaries (RICS), Data Management Plans, and laboratory Statements of Work. He performed senior reviews of Quality Assurance Project Plans, FSPs, and RICS reports. He also performed laboratory audits and documented deficiencies in audit reports. He performed data verification/validation of laboratory reports. He performed or managed most tasks related to providing clients with high quality deliverables from determining client requirements to final report delivery.

Air Toxics Ltd., Folsom, California
Support Services Supervisor. Greg supervised personnel in the HPLC and extractions laboratories, SUMMA canister cleaning and shipping department, and VOST tube preparation area. He developed the laboratory procedures for the analysis of aldehydes and ketones by Methods TO-5, TO-11, and CARB 430. He developed HPLC analytical parameters, performed instrument calibration, troubleshooting guidelines, and MDL studies. Greg increased overall productivity and quality of laboratory analyses. He trained analysts in proper analytical techniques. He was responsible for the preparation of all air sampling media including DNPH sampling impingers, TO-11 cartridges, PUF/XAD-2 sampling cartridges, and VOST tubes.

Western Environmental Sciences and Technology Laboratory, Davis, California
Laboratory Supervisor. Greg was responsible for the organic extractions and fuels analysis laboratories. He also was responsible for coordinating the activities of six technicians to ensure that incoming samples were processed in an efficient manner. He performed gas chromatographic (GC) analyses,

processed data, and issued laboratory reports for fuel analyses using LUFT methods. He developed several analytical methods to help the laboratory become a full service environmental analytical laboratory.

Chemwest Analytical Laboratories, Sacramento, California
Supervising Lead Chemist. Greg was responsible for the training and supervision of four technicians in the organics and dioxins extraction laboratories. He performed volatile analysis using gas chromatography/mass spectroscopy (GC/MS). He developed improved methods for washing glassware, eliminating a continuing source of laboratory contamination. He implemented safety procedures to decrease exposure to employees.

NET Pacific, Santa Rosa, California
Team Leader, Extractions Laboratory. Greg was responsible for the training and supervision of five technicians in the organics extraction laboratory. He increased automation to allow for greater production with fewer man-hours. He maintained sample tracking information in the laboratory database and ensured samples were processed rapidly while maintaining quality of results.

Radian Corporation, Sacramento, California
Supervisor, Sample Preparation Laboratory. Greg was responsible for the training and supervision of seven technicians in the organics extraction laboratory. He increased production by doubling the number of soxhlet and continuous liquid-liquid extractors and streamlining procedures. He repaired GCs and performed troubleshooting and maintenance for various instruments. He developed an analytical method for herbicides, which reduced the hazards and increased the recoveries of target analytes. Greg acted as the back-up Laboratory Manager, responsible for all laboratory operations during the laboratory manager's absence.

Experience Summary

Ms. Crabtree has over thirteen years of professional experience in the industrial hygiene, health and safety, and environmental fields. She has a strong background in OSHA compliance evaluations and monitoring, aiding facilities in obtaining ISO 14001 certification, providing training on safety topics, aiding facilities in the implementation of health and safety management systems, investigational projects such as silica air monitoring and control implementation, indoor air quality, overseeing safety and monitoring of remediation projects, bulk asbestos surveys, and providing employee awareness level training. Ms. Crabtree has a good understanding of working with clients to develop projects that best suit their needs in a cost-effective manner. Ms. Crabtree works closely with local health and safety organizations and planning committees, giving her an extensive network of contacts and background information. A summary of her qualifications is presented below:

Assignment

Regional Health & Safety Manager

Education

B.S., Industrial Hygiene, The University of North Alabama-Florence, 1995

Certification

AHERA Asbestos Building Inspections

AIHA Proficient to Perform Asbestos Air Analysis

Certified Respirator Fit Tester

40-hour OSHA Health & Safety Certification (HAZWOPER) (29 CFR 1910.120), 1998

8-hour OSHA Health & Safety Annual Certification Update (HAZWOPER), October 2002

8-hour OSHA Supervisor's Certification

30-hour OSHA Training

Experience

12 years

Joined Firm

2003

Relevant Experience

Safety Program Management

Safety Audits

Air monitoring

Noise Monitoring

Industrial Hygiene, Health and Safety

- Performed OSHA Compliance, general safety, and ISO 14001 walk-through evaluations to include industrial facilities, health care facilities, commercial facilities, and construction sites. Specific settings in which audits have been performed are automotive parts manufacturers, natural gas pipeline facilities; manufacturing facilities to include foundries, refrigeration units, furniture manufactures, etc.; hospitals; day care facilities; and military installations. These audits consist of performing a regulation and best management practice assessment, documenting deficiencies, ranking significance of deficiencies, and providing corrective recommendations.
- Developed and implemented written programs, training programs, and standard operating procedures to include: Hazardous Waste Operations and Emergency Response (HAZWOPER) Training (40-hr., 24-hr., and 8-hr.), Hazard Communication Program and Training, Respiratory Protection Program and Training, Safety & Health Manuals (to include confined space, lock-out tag-out, etc.), Noise Awareness and Protection Program, Instrumentation Standard Operating Procedures and Training, Asbestos Operations and Management Plans, and Asbestos Awareness Program and Training.
- Conducted OSHA compliance monitoring, indoor air quality studies, ventilation testing, and remediation testing for silica, asbestos, lead, and mercury. Performed personnel and area air monitoring for various air contaminants to be compared to 8-hour time weighted exposure limits, short-term exposure limits, and ceiling values. This includes such parameters as silica, nuisance dusts, metals, acids, organic vapors, etc.
- Performed personnel and area noise monitoring to be compared to 8-hour time weighted exposure limits, and ceiling values.
- Developed and implemented engineering controls for various industrial hygiene, and safety and health issues. Served as Safety Officer and Project Manager for Emergency Response Projects. Performed safety

oversight and monitoring of contaminated soil remediation and underground storage tank removals for commercial, industrial, and government facilities.

- Responsible for management of construction safety on chemical facilities and steel mill sites.
- Performed ventilation system monitoring, accident investigation, and confined space entry monitoring for commercial, industrial, and government facilities.
- Prepared SID, NPDES, Form R, and Tier II reports and permit applications.

Experience Summary

- Brown and Caldwell, Nashville, TN, Regional Health & Safety Manager, October 2003 – present.
- SECOR International Incorporated, Franklin, TN, Project Manager Health and Safety Specialist, January 2000 – October 2003.
- Mid-South Testing, Decatur, AL, Project Manager – IH, Health & Safety, and Environmental Projects, October 1996 – January 2000.
- Nelson Service Group, Incorporated, Florence, AL, Industrial Hygienist, May 1995 – August 1996.

Memberships

Chairman of American Society of Safety Engineers (ASSE) Planning Committee for ASSE National 2002 Health & Safety Conference

Secretary of the Middle Tennessee Valley Chapter of the American Society of Safety Engineers, 2002-03

President of the Tennessee Valley Chapter of the American Society of Safety Engineers, 1999-2000

Treasurer of the Muscle Shoals Safety and Health Association, 1998-1999

Middle Tennessee Branch American Society of Safety Engineers

American Industrial Hygiene Association

National Safety Council

Awards

Awarded Middle Tennessee Chapter ASSE Safety Person of the Year, 2001 – 2002

Nominated ASSE National Safety Person of the Year, 2002 – 2003

Publications/Presentations

1. Authored Middle Tennessee Chapter of the American Society of Safety Engineers Newsletter 2002
2. Authored Tennessee Valley Chapter of the American Society of Safety Engineers Newsletter 1998-1999

Experience Summary

Jonathan Howland specializes in the application of geotechnical engineering principles to complex engineering projects. He combines practical site investigation and construction monitoring experience with a knowledge of advanced investigative and analytical techniques (finite element methods, engineering reliability analysis, cone penetration testing) to provide state-of-the-art geotechnical engineering services. As a managing geotechnical engineer, Dr. Howland is responsible for conducting and supervising geotechnical and geo-environmental engineering analyses for buildings, dams, and excavation stability and settlement, stability and hydraulic performance of landfill covers, liners and leachate collection systems, hazardous waste site remedial design, and geosynthetics applications.

Dr. Howland has planned and executed field investigation programs including high quality subsurface sampling, cone penetration testing (CPT), plate load tests, and piezometer installation. He has also supervised areal fill placement, footing and pipe trench backfill, and pile installation. He has been responsible for planning laboratory testing programs, interpreting cut slopes, embankments, cofferdams, and earth retaining structures. Numerous projects have involved special conditions such as soft soils, industrial and municipal wastes, expansive soils, and collapsible soils. He has supervised construction blast monitoring near sensitive structures (TV and radio stations, university linear accelerator). He has also performed foundation design analyses for offshore oil production platforms (stability, contact stresses, analyses of piezocone penetration test (PCPT) data, and development of finite element codes).

Assignment

Remedial Design

Education

Ph.D., Civil (Geotechnical) Engineering, Rensselaer Polytechnic Institute, 1981

M.Eng., Civil Engineering, Rensselaer Polytechnic Institute, 1977

B.S., Civil Engineering, Rensselaer Polytechnic Institute, 1976

Registration

Professional Engineer, New York, 1988

Professional Engineer, California, 1983

Experience

30+ years

Joined Firm

2003

Relevant Expertise

- *Civil/Geotechnical/Geoenvironmental Engineering*
- *Geotechnical Laboratory Testing*
- *Closure Design (capping/cover)*
- *Soil Modeling (stress, deformation, consolidation)*
- *Hydraulic Modeling (leachate, groundwater, infiltration)*
- *Soil and groundwater contamination modeling and remediation*
- *Hazardous Waste Management*
- *Environmental, Geological, Geotechnical Database Management*

ISP, Inc., Brownfields Redevelopment, Linden, New Jersey

Geotechnical Engineer. Brownfields redevelopment of this 125-acre site required extensive grading to provide cover for residual contamination, flood plain set backs and suitable building pads for the proposed warehouse complex. A surcharge pre-loading program was developed to pre-consolidate the underlying organic soils so that settlements at the time of building construction will be acceptable. This avoided the expense of a pile-supported structural slab. Sludge basins were remediated using an innovative technique involving mud-waving the sludge to a location where it could be loaded, trucked and spread out for drying. This avoided the expense of in-situ stabilization. Over 2 million cubic yards of fill will be placed for this redevelopment.

Siemens, Vapor Intrusion Mitigation Design and QA, Hicksville, New York

Certifying Engineer. A large DC-to-AC Converter Station was to be constructed over an existing debris landfill. The original design called for a HDPE geomembrane battened to approximately 100 foundation elements. A value-engineered design alternative was developed using spray-applied Liquid Boot vapor barrier and a GeoVent vapor venting system to reduce cost and installation time.

NYSDEC, FS/RD/Remediation of Cumberland Bay Sludge Bed Superfund Site, Plattsburg, New York

Certifying Engineer. Responsible for documenting and certifying remediation of PCB-contaminated paper sludge from the bottom of Cumberland Bay. Design engineer responsible for evaluating turbidity

containment systems for areas of deep dredging of highly contaminated sludge, and near-shore and upland confined disposal facilities.

Niagara Mohawk, Remediation of Former Manufactured Gas Plant, Troy, New York

Project Engineer. Responsible for evaluating of excavations to a depth of 18 feet in the vicinity of existing buildings and stream channel structures, and bank stabilization and capping along the Hudson River (Area 2). Responsible for documenting and certifying a portion of the remedial construction according to the NYSDEC-approved plans and specifications at an MGP disposal site. Construction included 70,000 c.y. of excavation and tar waste removal for thermal destruction.

OxyChem, Inlet Site Remedial Design (RD), North Tonawanda, New York

Certifying Engineer. Lead remedial design (RD) engineer for the cleanup of chemical contamination in the sediments of an embayment along the Little Niagara River. The remedial design included removal of DNAPL from river sediments, removal of DNAPL from the adjacent aquifer and geotechnical testing and design of a double-wall cofferdam across the mouth of the cove to allow for soil and sediment removal to a depth of 40 feet below river level. The remainder of the site was contained with a barrier wall consisting of sheetpiles with angle sections welded over the interlocks. The space within the angle sections were cleaned with a high pressure water jet and then filled with bentonite grout.

Counsel to OxyChem, Love Canal Litigation, Niagara Falls, New York

Geotechnical Engineer. Performed numerical (finite element) soil model analyses to evaluate stress relief in the soils adjacent to the canal in order to predict secondary porosity enhancement that could have been responsible for migration of contaminants through surrounding clay soil. The geotechnical analysis/model searched for tension zones and areas of fracture widening where contaminants could migrate away from the canal. The analyses demonstrated that direct migration from the canal was limited and that other contaminant pathways were indicated.

East Penn Manufacturing Co., Ore Pit Stability Analysis, Lyon Station, Pennsylvania

Geotechnical Engineer. Remediation of contaminated sediments from the 35-foot deep ore necessitated dewatering of the pit. Supervised field investigation and geotechnical testing to obtain stratigraphic information and soil strength parameters. Developed soil models to evaluate the stability of the slope and adjacent smelter building during dewatering of the ore pit. Based on the calculations it was recommended that the ore pit be dewatered at a controlled rate to avoid a rapid drawdown failure and that the slope movements be monitored with slope inclinometers during construction.

Metz Landfill, C&D Landfill Fire Mitigation, Town of Bethlehem, New York
Technical Advisor. Closure of existing landfill and mitigation of landfill fire at the 20 acre Construction and Demolition (C&D) debris landfill. Performed slope stability analysis and settlement analysis for landfill closure as well as the development of fire control options.

Town of Conklin, Municipal Landfill Closure FS/RD, Conklin, New York
Geotechnical Engineer. Closure of two adjacent municipal landfills. Performed settlement analysis for reconsolidation of waste into one landfill to reduce footprint and slope stability analysis for geomembrane cap and final cover. Prepared hydraulic analysis of leachate flow and generation for placement of leachate collection trenches and extraction wells.

City of Rome, FS/RD, Inactive Hazardous Waste Site Closure, Rome, New York
Geotechnical Engineer. Closure of the inactive landfill. Developed groundwater model of leachate mound within the landfill to evaluate leachate containment and collection system alternatives to protect downgradient residential potable wells and nearby wetlands. A partially penetrating barrier wall was selected to protect the wetland. Designed final cover system and soil / bentonite slurry wall and sheet pile wall groundwater control system. The sheetpile wall was used adjacent to an operating municipal ash landfill and vibration measurements were conducted during sheetpile installation to ensure the integrity of the final cover over portions of the ash landfill.

GEOTECHNICAL

C. D. Perry & Sons, Remediation of Former Manufactured Gas Plant, Saratoga Springs, New York
Project Manager / Certifying Engineer. Design of braced (1 and 2 rows of wales) sheetpile excavations to allow the removal of coal tar contaminated soils. Ten excavations were designed with rectangular, circular to semi-circular shapes and depths up to 28 feet below grade. Design was complicated by high groundwater conditions and soft clay subgrade. Value engineered a cost-effective alternative to the Waterloo barrier system included in the original design. The alternative consisted of conventional sheetpiles sealed with the Roxan sealant system. Integrity of the interlock installation was verified via a switch at the bottom of the female interlock.

Dutchess County Dept. of Public Works, Poughkeepsie, New York
Project Manager. Investigated the failure of a 700-foot section of CR 85 along a 100-foot high slope. Several remedial options were evaluated including tied-back soldier pile walls, stone columns, pin piles and lightweight fill. Removal of existing fill and replacement with lightweight structural geofoam was found to give the greatest increase in the factor of safety at the lowest cost.

NJDOT, Rt. 52 Causeway, Ocean City, New Jersey
Geotechnical Engineer. Responsible for the geotechnical evaluation of causeway replacement alternatives. Developed site investigation plan including borings on land, over water and in wetlands. Evaluated deep foundations for structure alternatives. Evaluated stability and settlement for embankment alternatives. Because of the projected construction duration, it was concluded that sufficient consolidation would occur to allow the use of the more economical embankment alternative.

NYSDOT, L.I.E. Rehabilitation, Long Island, New York
Geotechnical Engineer. Responsible for redesigning retaining walls over soft, organic subgrade conditions to accommodate realignment of the road and increase of the roadway height. Tied back retaining walls were used to accommodate calculated settlements and provide for maintenance of traffic.

Greene County, Landslide Remedial Design, Greene County, New York
Project Manager. Evaluated the massive failure of a 150-foot high slope which closed County Route 2 covering the road with 18 feet of mud. Designed remediation of the slope which included a comprehensive internal slope drainage system to maintain stability during high groundwater table conditions.

Memberships

American Society of Civil Engineers
- Chairman, Geotechnical Group, Hudson-Mohawk Chapter, 1997-1999
- Publications Committee, Technical Council on Computer Practices

American Society for Testing Materials
- Technical Reviewer, Committee D-18 on Soil and Rock
- Session Chairman, Symposium on Geotechnics of Waste Fills, June 1990

National Science Foundation
- Proposal Reviewer, Structures and Mechanics Program

International/North American Geotextile Society

Tau Beta Pi, Sigma Xi, Chi Epsilon honorary societies

Publications/Presentations

1 Howland, J.D. and A.O. Landva, "Stability Analysis of a Municipal Solid Waste Landfill". ASCE Specialty Conference on Stability of Slopes and Embankments, Berkeley, California, June 1992.

2 Howland, J.D., "Numerical Simulation of Laboratory Hydraulic Surcharge Consolidation Tests", Internal Report 52406-52, Norwegian Geotechnical Institute, November 1985.

3 Howland, J.D., W.H. Roth, R.K. McGuire and J. Sweet, "Probabilistic Analysis of a Geomechanical Prediction of Ground Surface Rupture", Seismic Risk and Heavy Industrial Facilities Conference, San Francisco, California, May 1983.

4 Rooney, M.F., J.D. Howland and R.J. Molz, "Implementing Large Programs on Micro-Computers", Journal of the Technical Councils, ASCE, May 1982.

5 Howland J.D., "A Simplified Procedure for Reliability Analysis in Geotechnical Engineering", doctoral thesis, Rensselaer Polytechnic Institute, Troy, New York, August 1981.

6 A-Grivas, D., R. Dyvik and J.D. Howland, "An Engineering Analysis of the Seismic History of the State of New York", Seventh World Conference on Earthquake Engineering, Istanbul, Turkey, September 1980.

Experience Summary

Benjamin Leff is the Senior Construction Engineer for Brown and Caldwell's Allendale office. He has 16 years of construction experience with eight years in the environmental field. In addition to his eight years of heavy highway and building construction experience, Mr. Leff has successfully managed multiple environmental projects ranging in value up to $50 million. Mr. Leff has extensive experience managing large scale earth moving jobs as well as technically complex, discreet cleanup jobs. He has successfully managed minor interior decontamination and dismantlement jobs as well as full scale decontamination and demolition of large manufacturing campuses. Mr. Leff is a licensed Asbestos Inspector and Lead Inspector/Risk Assessor. He also has an extensive health and safety background.

Assignment

Health and Safety Contingency Plan

Education

B.S. Civil Engineering Technology, Wentworth Institute of Technology, Boston, MA, 1994

Registration

NJ Asbestos Inspector License

NJ Lead-Based Paint Inspector and Risk Assessor License

OSHA 40-Hour HAZWOPER Certification and 8-Hour Refresher Training

OSHA 8-Hour Supervisor's Certification

OSHA 10- and 30-Hour Courses, Standards for the Construction Industry

First Aid and CPR (current)

Process Safety Management Training

Experience

16 years

Joined Firm

2009

Environmental Project Management Experience

ExxonMobil, East Greenwich, New Jersey

Project Manager. An access road was constructed across a tidally influenced embayment to install sheet pile. Approximately 2,500 linear feet of sheet pile was installed to contain the embayment. Excavate and dispose of more than 120,000 tons of hazardous PCB impacted sediment and soil. Material was stabilized on site utilizing CaO. We utilized intermodal and gondola rail cars for shipment. A continuous dewatering and water treatment system processed approximately 1,000,000 gallons per week.

Honeywell Inc., Jersey City, New Jersey

Project Manager. Excavation and Backfill of One Million tons of hazardous hexavalent chrome impacted soil. The site averaged 1,500 tons shipped per day. An elaborate dewatering system continuously pumped and segregated 3 separate water streams.

Pharmaceutical Company, Piscataway, New Jersey

Project Manager. The project scope included Decontamination and Demolition of a multiple building former penicillin-manufacturing compound. All piping, ductwork and tools that ever came in contact with penicillin were identified and thoroughly decontaminated with a caustic solution and then tested for the presence of penicillin. All penicillin-impacted materials (approx. 7,000 items) were tracked to final destruction / disposal utilizing an extensive tagging system and database. Scope also included flushing of all interior and exterior utilities including removal of all civil structures and final grading.

Semiconductor Plant Decommissioning, Mountain Top, Pennsylvania

Project Manager. Decontaminating, rigging, crating and shipping semiconductor tools overseas. Approximately 200,000 square feet of selective demolition and decontamination of all process lines, drains, and associated ductwork. The job also included asbestos removal and mercury recovery. All work was coordinated within a live production facility.

Borough of South Plainfield, New Jersey
Project Manager. Remediation and restoration of a borough park that was contaminated with asbestos, PCBs, and a "tar like" substance.

NJNG, Atlantic Highlands, New Jersey
Project Manager. Remediation and disposal of 30,000 tons of MGP impacted material. Involved temporary relocation of two private homes as well as a soil cap and stream and wetland restoration.

LIRR, Long Island, New York
Project Manager. Mercury remediation at three separate substation locations in close proximity to live train platforms. UIC sampling and closure in accordance with DOH.

Electric Company, Astoria, New York
Project Manager. Excavation and disposal of 2,000 tons of petroleum contaminated soil on a dock relieving platform.

Former Superfund Site, Hatfield, Pennsylvania
Project Manager. Dioxin contaminated tank closure, cleaning and disposal (level B PPE) for the Army Corp of Engineers.

Large DOD Contractor, Long Island, New York
Project Manager. Excavation and disposal of approximately 4,000 tons of heavy metal contaminated soil. 43 separate AOCs were grouped and sequenced for excavation utilizing various excavation techniques. Involved sampling and closure of UIC features. Excavated and disposed of approximately 4,500 tons of PCB-contaminated soil followed by the installation of a new storm water system and an asphalt cap. Work was completed while the facility remained open.

Commercial Building Construction and Heavy Civil Construction Experience

Performed various roles including Project Manager, Project Superintendent, Safety Manager, Quality Control Manager, and Scheduler for a variety of projects. Projects included two Central Artery Tunnel (Big Dig) projects, Boston, Massachusetts; several mass transit train platforms; a train repair facility; retail building, including tenant fit-up; and a 100-year old church renovation.

Experience Summary

Nicole Lordan provides field support with hydrogeologic investigations including soil, groundwater, and sediment sampling, and other remedial actions. Other tasks previously undertaken include, report preparation assistance, computer data entry, and monthly health and safety office inspections.

Assignment
Health and Safety Contingency Plan

Education
B.S., Environmental Science, Rutgers, The State University of New Jersey, 2007

Certifications
40-Hour HAZWOPER Training
OSHA 8-Hour Training for Supervisor
CPR and First Aid

Experience
2 years

Joined Firm
2007

Work Experience

D' Imperio Property Site, Mays Landing, New Jersey
Scientist I. Performed water quality tests on re-injection wells and helped to troubleshoot injection pumps. Set up and completed a full round of groundwater sampling for all of the monitoring wells, including calibration and operation of field equipment, including NJ State Certified field lab equipment.

Wyeth, Former Boyle-Midway Facility, Cranford, New Jersey
Scientist I. Conducted a full round of groundwater elevation levels prior to sampling using conventional sampling techniques at this former household product manufacturing plant. Other field investigation activities included repairing damaged/missing well caps and j-plugs.

National Grid, Oswego, Former MGP, Oswego, New York
Scientist I. Field activities included performance of groundwater sampling using convention sampling techniques, and hydraulic conductivity testing on several monitoring wells.

Performed Soil Vapor Intrusion (SVI) Evaluation to assess the potential for soil vapor to impact indoor air in the buildings located on the site. Implemented field activities consisting of installation of soil vapor and sub-slab vapor probe and sampling of various media (i.e., soil vapor, sub-slab soil vapor, indoor air, and outdoor air), which included calibration and operation of equipment, leak-testing, and sampling using Summa canisters.

National Grid, Troy, Former MGP, Troy, New York
Scientist I. Assisted in an ongoing field investigation at this former Manufactured Gas Plant/Chemical Plant, including well development, NAPL gauging on all installed wells, conducting a complete round of water levels, and ground water sampling of monitoring wells.

National Grid, Cohoes, Former MGP, Cohoes, New York
Scientist I. Performed field tasks including extensive NAPL gauging on all wells, a complete full round of water levels, pump tests, and groundwater sampling of all monitoring wells.

Performed Soil Vapor Intrusion (SVI) Evaluation to assess the potential for soil vapor to impact indoor air in the residences located near the southern portion of the site. Implemented field activities consisting of installation of soil vapor and probes and sampling of soil vapor and outdoor air.

T-Mobile, Parsippany, New Jersey
Scientist I. Completed the Baseline Ecological Evaluation for the site report, which entailed assessing the potential risk to the surrounding environment based on contaminate migration models.

BFI-Pedricktown, Pedricktown, New Jersey
Scientist I. Transported old containers of Hydrogen Release Compound and Oxygen Release Compound to the appropriate disposal facility. Other field activities included a full round of water levels, as well as collection of soil samplings via GeoProbe test borings.

T-Mobile/Wayne Switch, Wayne, New Jersey
Scientist I. Provided oversight for the GeoProbe installment of temporary wells, sampled temporary wells using the purge and bail method. Conducted groundwater sampling of newly installed wells and collected SUMMA canisters from the indoor SV sample locations.

Confidential Client, Kearny, New Jersey
Scientist I. Assisted in ongoing field investigations by performing a full round of groundwater elevation levels prior to ground water sampling using conventional sampling techniques. Performed ground water, soil, and waste characterization sampling. Performed weekly air monitoring at a demolition site, followed up by data summary reports which included the weekly air fluctuations. Office duties include data tabulation, GIS mapping activities and assistance with Public Notification.

LCP Inc. Superfund Site, Linden, New Jersey
Scientist I. Conducted low-flow groundwater sampling (using certified New Jersey Field Lab Sampling Procedures). Office duties included Remedial Investigation Report preparation and GIS mapping activities.

Arrow, Wanaque, New Jersey
Scientist I. Provided oversight for drum removal, as well as a full round of groundwater elevation levels, followed by groundwater sampling using the low flow sampling techniques. Office duties included assistance with the Public Notification.

Boarhead Farms, Upper Black Eddy, Pennsylvania
Scientist I. Assisted in field investigation including ground water sampling of monitoring wells throughout the site, as well as residential water sampling.

Former Novartis Pharmaceutical Facility in Summit, Summit, New Jersey
Scientist I. Performed a full round of groundwater elevations, followed by low flow groundwater sampling. Other field activities included sediment sampling, weekly counter readings from extraction wells, system check on treatment plant, and calibration of treatment plant pH meter. Office tasks have included data tabulation and GIS mapping activities.

Jet Blue, New York, New York
Scientist I. Conducted research of potential carbon offset providers in collaboration with the Milwaukee office. Contacted each company to set up interviews and prepared tables summarizing the findings from each potential partner, amongst other office duties.

Former Newton II Former MGP, Newton, New Jersey
Scientist I. Looked into current real estate prices for small-scale companies. Prepared tables and maps which depicted the locations of the monitoring wells and their contamination levels.

Ze-Gen, Boston, Massachusetts
Scientist I. Researched C&D waste components, in particular for the presence of specific chemicals. Determined their fate and transport if incinerated.

ISP, Linden, New Jersey
Scientist I. Organized and entered soil manifest information into database, as well as fix database inconsistencies.

Health and Safety, Brown and Caldwell
Scientist I. Perform monthly office inspections to insure the maintenance of office health and safety.

Deluxe, Clifton, New Jersey
Scientist I. Office tasks include file reviews at the NJDEP, GIS mapping activities, etc. Field tasks performed were quarterly low-flow groundwater monitoring using certified New Jersey Field Lab Sampling Procedures.

Prime Energy, Fairfield, New Jersey
Scientist I. Performed a site visit for a potential rental property, followed up by a Phase I.

A Space Station Storage, Fair Lawn, New Jersey
Scientist I. Performed a site visit for a property reassessment, followed up by a Phase I.

Atlanta Gas Light Company, Griffin, Georgia
Scientist I. Conducted air monitoring operations during a large scale excavation of former manufactured gas plant impacted soil. Duties included the maintenance of a four-station air monitoring designed by AirLogics . Each station was solar powered and monitored for airborne dust and VOCs. Weekly discrete air sampling was conducted using Summa canisters and PUF samplers.

First Energy, Belmar, New Jersey
Scientist I. This three-acre site, regulated under the NJDEP Site Remediation Program, is being remediated for the presence of light and dense non-aqueous phase liquids in the subgrade. Activities included product removal of LNAPL and DNAPL from several monitoring and extraction wells, including groundwater level measurements, as well as sampling plant effluent.

El Paso, Fords, New Jersey
Scientist I. Field activities have included surficial soil/sediment collection, low-flow groundwater sampling using certified New Jersey Field Lab Sampling Procedures, collection of radiologically-impacted soil samples using GeoProbe, observation of bathymetry measurements and vibracore drilling in lakes, and collection of samples from vibracores for lake characterization event. Office tasks have included historical file review, data entry and database management, GIS mapping, data tabulation, and review of the Technical Memorandum.

JAMES L. MAROLDA, P.G.

Experience Summary

James Marolda provides technical and managerial support on hydrogeological investigations including landfill expansion; aquifer testing; soil and groundwater sampling; supervision of drilling operations; and monitoring and extraction well installation. Other tasks include report preparation, aquifer test analysis, and generating potentiometric surface maps and hydrogeologic cross-sections. Mr. Marolda has gained extensive experience in preparing hydrogeologic investigation reports consisting of researching regional and site-specific geologic and hydrogeologic conditions, evaluation of collected field data, and determination of the nature and extent of chemical constituents at numerous sites. As an experienced field geologist combined with valuable office responsibilities, Mr. Marolda is capable of executing a project from start to finish. Responsibilities for hydrogeologic investigations he has performed consist of conducting and directing field activities, data evaluation and manipulation, and preparation of reports that are submitted to various regulatory agencies. These reports accurately portray the site conditions, as determined from information obtained for the site.

Assignment

Geology/Hydrogeology

Education

B.A., Geology, LaSalle University, Philadelphia

Registrations

Registered Professional Geologist, Pennsylvania (PG004740)

Certifications

OSHA Health Hazard Training

OSHA Site Supervisory Training

CPR/First Aid

Experience

9 years

National Grid, Troy (Water Street) Former MGP Site, Troy, New York

Assistant Project Manager/Field Operations Leader. Conducted extensive hydrogeological investigation at a former manufactured gas plant (MGP) site for the purposes of evaluating horizontal and vertical groundwater flow patterns within the various geologic units underlying the property including alluvial and glacial deposits (lacustrine and till). In addition to understanding the behavior of groundwater across the site, assessing the degree of hydraulic communication between the groundwater underlying the site and the adjacent surface water bodies (Hudson River and Wynantskill Creek) was a key objective for the project. Project responsibilities included directing and implementing the various field activities, which consisted of stratigraphic borings, piezometer installation, hydraulic conductivity testing, and tidal monitoring. Assisted in the prparation of a comprehensive hydrogeologic report that provided a detailed evaluation of the collected field data.

Project Hydrogeologist. Perfomed extensive test pitting program in an effort to delineate subsurface structures and wastes, including LNAPLs and DNAPLs, purifier wastes, PAHs and BTEX. Locations of the excavated test pits were situated near previously identified tar weeps in order to identify source of weeps as well as determining the horizontal and vertical extent of contamination, if feasible. Project responsibilities included supervision of test pitting activies, collection and classification of soil samples, and photo documentation for use in preparing detailed test pit logs. Other activities included direct contact with NYSDEC oversight and classification of wastes identified in excavations.

Project Hydrogeologist. Performed sampling and chemical injection as part of an in-situ chemical oxidation (ISCO) pilot test to address DNAPL and BTEX impacted groundwater for the former MGP site. Project responsibilities included sampling and analysis of groundwater using water

quality meters and Hach™ Kits to determine lasting effects of injection products. Other activities includes periodic measurements of breathing zone air using a multi-gas monitor for routine health and safety monitoring and to document off-gassing reactions, if any, within the unsaturated zone of the injection area.

National Grid, Oswego (W. Utica Street) Former MGP Site, Oswego, New York
Assistant Project Manager/Field Operations Leader. Performed Remedial Investigation (RI) of former MGP site to evaluate the geologic and hydrogeologic conditions of the subsurface materials underlying the site and to assess the nature and extent of MGP-related impacts within soils and groundwater. Project responsibilities included directing and implementing the various field activities, which consisted of stratigraphic borings, monitoring well installation, hydraulic conductivity testing, and sampling of groundwater and soil gas. Prepared Data Summary Report which presented tables, figures, boring logs, and other data and information related to the findings of the RI field activities.

Project Manager. Performed Soil Vapor Intrusion (SVI) Evaluation to assess the potential for soil vapor to impact indoor air in the buildings located on the site. Prepared work plan to conduct evaluation and implemented field activities consisting of installation of soil vapor and sub-slab vapor probe and sampling of various media (i.e., soil vapor, sub-slab soil vapor, indoor air, and outdoor air). Evaluation of the results indicated that sub-slab vapors were not impacting indoor air in the buildings and that no further evaluation of the potential for impacts from soil vapor was required. Prepared technical memorandum that documented the findings of the SVI Evaluation and provided conclusions and recommendations.

Project Manager. Performed Supplemental Remedial Investigation (SRI) of former MGP site to further evaluate the geologic and hydrogeologic conditions of the subsurface materials underlying the site and to further assess the nature and extent of MGP-related impacts within the soils and groundwater. In addition, based on RI findings, it was necessary to evaluate bedrock conditions at the site to assess potential MGP-related impacts within bedrock media. Project responsibilities included directing and implementing the various field activities, which consisted of stratigraphic borings, monitoring well installation, hydraulic conductivity testing, and sampling of groundwater. Other field activities included rock coring, borehole geophysics, and packer permeability testing. Prepared tables, figures, and updated hydrogeologic cross-sections that presented the findings from the SRI field activities.

National Grid, Cohoes Former MGP Site, Cohoes, New York
Assistant Project Manager/Field Operation Leader. Performed Supplemental Remedial Investigation (SRI) of former MGP site to further evaluate the geologic and hydrogeologic conditions of the subsurface materials underlying the site and to further assess the nature and extent of MGP-related impacts within the soils, bedrock, and groundwater. Project responsibilities included directing and implementing the various field

activities, which consisted of stratigraphic borings, monitoring well installation, hydraulic conductivity testing, and sampling of groundwater and surface water. Other field activities included rock coring, borehole geophysics, packer permeability testing, pumping tests, and continuous water level monitoring of groundwater and surface water. These activities were performed for the purposes of further evaluating an apparent continuous water-bearing fracture zone within bedrock, which was identified during the initial RI. Prepared Data Summary Report which presented tables, figures, boring logs, and other data and information related to the findings of the SRI field activities.

Assistant Project Manager/Field Operations Leader. Performed Phase III Remedial Investigation (SRI) of former MGP site to further evaluate the nature and extent of MGP-related dissolved-phase constituents within the overburden and bedrock groundwater and NAPL within the soils and bedrock. These activities were performed for the purposes of further evaluating an apparent continuous water-bearing fracture zone within bedrock, which was identified during the initial RI. Monitoring wells were installed at target depths based on the presumed structural orientation of the continuous water-bearing fracture zone. The wells were installed near the northern and southern boundaries of the site and on an off-site property located across the Mohawk River from the site. Hydraulic monitoring of surface water and groundwater levels was conducted to determine discharge point for site groundwater originating from the continuous water-bearing fracture zone. In addition, pumping tests were performed at wells screened across the fracture zone to evaluate the degree of hydraulic communication between wells located on property across the Mohawk River and the wells positioned across the site. Prepared various materials for inclusion into a Data Summary Report, which included tables, figures, boring logs, geophysical logs, updated hydrogeologic cross-sections, and hydrographs. These materials presented the findings of the Phase III RI field activities.

Project Manager. Performed Soil Vapor Intrusion (SVI) Evaluation to assess the potential for soil vapor to impact indoor air in the residences located near the southern portion of the site. Prepared work plan to conduct evaluation and implemented field activities consisting of installation of soil vapor and probes and sampling of soil vapor and outdoor air. Evaluation of the results indicated that soil vapors were not impacted near the residences and that no further evaluation of the potential for impacts from soil vapor would be required.

National Grid (Massachusetts Electric), North Adams MGP Site, North Adams, Massachusetts

Assistant Hydrogeologist. Performed a preliminary field investigation gauged towards selecting the most practical remediation method for the site. Activities included sampling and classification of soils confined to a former gas holder. Conducted quarterly groundwater sampling at the former MGP Site.

National Grid, Rensselaer Former MGP Site, Rensselaer, New York

Assistant Project Manager/Field Operations Leader. Performed Remedial Investigation (RI) of former MGP site to evaluate the geologic and hydrogeologic conditions of the subsurface materials underlying the site and to assess the nature and extent of MGP-related impacts within the soils and groundwater. Project responsibilities included directing and implementing the various field activities, which consisted of stratigraphic borings, monitoring well installation, hydraulic conductivity testing, and sampling of groundwater, surficial soils and stream sediments. Prepared Data Summary Report which presented tables, figures, boring logs, and other data and information related to the findings of the RI field activities.

Hercules Inc., Glens Falls, New York

Assistant Hydrogeologist. Project responsibilities consisted of supervision of drilling activities including installation as well as development of monitoring and extraction wells. Other activities included performing specific capacity and yield tests on all extraction wells. Conducted a systematic approach of optimizing performance of the Groundwater Extraction System (GWES). Activities included identifying and correcting present deficiencies within the GWES. Once the deficiencies were addressed, balancing of the GWES was achieved by pumping each well/sump as close as practical to the yield point, while making adjustments to reduce the cycling of each pump to the lowest frequency that was practically attainable.

Harcros Chemicals, St. Louis, Missouri

Project Manager. Conducted Site Investigaton (SI) to evaluate subsurface conditions in areas of potential environmental concern to determine if environmental media have been impacted by site operations and if supplementary investigation activities would be required to adequately characterize the extent of impacts. Project responsibilities included directing and implementing the various field activities, which consisted of stratigraphic borings, monitoring well installation, hydraulic conductivity testing, and sampling of groundwater.

Prepared SI Report that included a discussion of the methods and procedures used during the field activities; a summary of the SI findings; and conclusions and recommendations associated with the SI. Report tables, figures and appendices were also prepared that presented the SI findings.

Memberships

National Ground Water Association

Geological Society of America

Publications

1. Randazzo, P. J., Chaturgan, T., Marolda, J., and Mino, C. (2009) "A Multi-Tool Approach to Determine CVOC Sources in a Bedrock Aquifer under Anisotropic Conditions"; presented at a Batelle Conference: In Situ and On-site Bioremediation, The Tenth Annual International Symposium, Baltimore, MD.

Experience Summary

Mr. Ostrowski is a Senior Environmental Engineer/Geohydrologist working as a technical lead on environmental projects. Mr. Ostrowski develops scope of work documents and level of effort estimates. He develops plans for field investigations; analyzes data obtained by field personnel; develops conceptual site models; performs numerical and analytical modeling; investigates impact of contamination on human and environmental receptors; develops remedial strategies and evaluates remedial methods/technologies; designs environmental remediation systems; analyzes system performance; presents findings to clients and regulating agencies; develops Design Drawings, as well as reports, such as Work Plans, Remedial Investigation Reports, Feasibility Study Reports, Data Analysis and Design Analysis Reports. Mr. Ostrowski coordinates work of various disciplines involved in completion of projects; he supervises and mentors junior staff.

Areas of expertise include: hydrologic/hydrogeologic investigations, environmental modeling, exposure assessment, landfill and drainage design, dewatering, underground storage tanks remediation, hazardous waste remediation, water supply, sanitary and storm sewers. Major work in the field of environmental remediation: ground water extraction and treatment, excavation of contaminated soil/sediments, dewatering, soil vapor extraction, sub-slab depressurization, air sparging, product recovery, in-situ bioremediation, constructed wetlands, landfill leachate handling, monitored natural attenuation.

Worked on projects for the following major clients: US Air Force, US Department of Energy, US Army Corps of Engineers, US Environmental Protection Agency, NYS Department of Environmental Conservation, NYC Transit, NYC Department of Design and Construction, New York City School Construction Authority, local governments, chemical industry, and energy industry.

Assignment

Remedial Design

Education

State University of New York at Buffalo
MS, Civil Engineering
BS, Civil Engineering

Registration

Professional Engineer, New York 1996
Professional Engineer, New Jersey 2009

Experience

20 Years

Joined Firm

2009

NYCT Underground Storage Tank Project, New York

Lead Engineer and Geohydrologist responsible for hydrogeologic investigations, groundwater and free product flow modeling, contaminant transport modeling, and remedial design at several large underground petroleum storage tank projects in New York City. Analyzed various aspects of the soil and ground water contamination by petroleum products, including the com-mingling of plumes from different sources. Designed field investigation programs, analyzed field data (baildown test, high-vacuum recovery tests, air permeability tests, etc). Performed design of free product recovery systems. Used analytical and numerical models (BIOSLURP) to analyze effects of product recovery alternatives. Evaluated the interaction between an existing free product recovery system and the proposed large-scale well field, which would significantly impact the regional flow regime. Prepared Design Analysis Reports. Analyzed system performance data and recommended system modifications. Responsible for coordination of work between the disciplines. Presented findings to the client and provided litigation support.

NYCDDC Underground Storage Tanks Project, New York

Design Engineer and Geohydrologist responsible for hydrogeologic investigations, groundwater and free product flow modeling, contaminant transport modeling, and remedial design at dozens of small to medium underground petroleum storage tank projects in New York City. Analyzed

various aspects of the soil and ground water contamination by petroleum products. Designed field investigation programs, analyzed field data (baildown test, high-vacuum recovery tests, air permeability tests, etc). Performed design of product recovery systems, ground water capture systems and soil vapor extraction systems, as well as in-situ remediation (bioremediation, oxygen injection). Used analytical models to analyze effects of product recovery alternatives. Prepared Design Analysis Reports. Analyzed system performance data and recommended system modifications. Responsible for coordination of work between disciplines.

NJDEP Underground Storage Tanks Project, New York
Geohydrologist and Design Engineer responsible for groundwater flow and contaminant transport modeling, hydrogeologic investigations, non-aqueous phase liquid modeling, design of remediation systems – ground water extraction, product extraction, soil vapor extraction systems for the remediation of underground storage tanks. Also assisted in the preparation of Design Analysis Reports.

New York State Electric and Gas Cortland/Homer, Saranac Street, Court Street, Mechanicsville and Transit Street Former Manufactured Gas Plant Sites, New York
Lead Engineer and Geohydrologist for the Remedial Investigation/ Feasibility Studies and Remedial Action Designs at several NYSEG former MGP sites. Investigation included hydrogeologic site assessment, identification of nature and extent of contamination, development of conceptual site models, aquifer testing, modeling of groundwater flow and contaminant migration, and modeling of groundwater extraction. The designs included open and sheeted excavation of contaminated soils, coal tar and river sediments; disposal of the excavated materials, excavation dewatering and treatment of the extracted groundwater, river flow diversion, NAPL recovery, in-situ solidification of the on-site soils, vertical barriers and site/river restoration. Responsible for the preparation of the Remedial Design Work Plans, including coordination of work between various disciplines, supervision of junior staff and interaction with client.

KeySpan Hempstead Intersection Street Former MGP Site, Hempstead, New York
Lead Geohydrologist for the Feasibility Study and Interim Remedial Measure design for a large MGP site in Long Island, New York. Coordinated a site-wide groundwater monitoring and sampling program. Developed and evaluated remedial alternatives, including hydraulic containment, vertical barriers, in-situ treatment and excavation. Solicited bids from contractors. Also responsible for siting and designing of DNAPL recovery wells. Responsible for coordination of work between disciplines and presentation of findings to the client.

Pennsylvania and Fountain Avenue Landfills, New York
Lead Geohydrologist and Project Engineer. Groundwater modeler and project engineer for the RI/FSs at two landfills adjacent to Jamaica Bay. Performed detailed three-dimensional groundwater flow modeling using

MODFLOW/MT3D, given complex stratigraphy, flow pattern, tidal effects, and boundary conditions. Performed design of remedial systems for contaminated ground water and for product recovery. Designed landfill cap drainage layer. Presented findings to the regulating agencies.

Farmersville Landfill, New York
Design Engineer and Groundwater Modeler for the proposed 250-acre solid waste disposal facility. Constructed a numerical ground water flow model of a fractured bedrock and overburden aquifer system. Used the flow model to investigate the short- and long-term influence of the facility on the ground water flow regime. The investigation included the design of permanent dewatering systems for the landfill subgrade and a leachate tank farm, located up to approximately 25 feet below the high ground water table. Estimated construction dewatering volumes to assess the impact of the facility on the nearby surface water bodies. Performed water quality analysis for a trout stream and an impoundment located downgradient of the proposed facility. Designed the cap drainage system. Coordinated work between disciplines and presented findings to the client and regulating agencies.

Fort Edward Landfill, New York
Lead Geohydrologist and Design Engineer. Groundwater modeler and design engineer responsible for groundwater flow modeling and remedial design for the landfill closure. Designed hydrogeologic investigation and constructed a numerical ground water flow model of the site. Used the model to analyze remedial alternatives. Performed design of the constructed wetland treatment system for the treatment of landfill leachate. Coordinated work of various disciplines.

Helen Kramer Landfill, New Jersey
Design Engineer and Groundwater Modeler for the Helen Kramer Landfill Superfund Remedial Design project. Performed hydraulic calculations of a stormwater management system for a 60-acre site in New Jersey. Responsible for writing specifications and developing cost estimates. Performed groundwater modeling and analysis of remedial alternatives.

Ramapo Landfill RI/FS, New York
Design Engineer and Geohydrologist responsible for remedial design and performing groundwater modeling. Designed, performed and evaluated several aquifer pumping tests. Developed and evaluated remedial alternatives for the Feasibility Study report. Designed the interception system for contaminated groundwater. Analyzed slope stability issues. Designed landfill cap.

New York City School Construction Authority, New York
Project Engineer for several underground storage tank investigation and remediation projects at the sites of public schools located in the City of New York. Prepared scopes of work and cost estimates, coordinated work

between disciplines, reviewed field investigation reports and remedial cost estimates and design specifications. Solicited bids from contractors.

Kenwood Cleaners, New York
Lead Engineer for the design of the remediation system at the former dry cleaners site. Analyzed site data, developed the conceptual site model and performed analytical groundwater modeling and calculations. Developed and analyzed remedial alternatives. Developed cost estimates.

Chem Sales, New York
Lead Engineer for the remediation project at a former hazardous material sales/distribution NYS Superfund site. Designed and supervised the execution of a large-scale aquifer pumping test in a bedrock aquifer. Analyzed result of the test to determine aquifer parameters. Used the findings to design a long-term aquifer dewatering system intended to facilitate the site remediation by steam injection. Performed the preliminary design of the steam injection system. Coordinated work between various disciplines.

Gratwick-Riverside Park, New York
Groundwater Modeler for the RI/FS at the Gratwick-Riverside Park Superfund Site, a 53-acre site located adjacent to the Niagara River in Niagara Falls, New York. Performed detailed 3-dimensional groundwater flow modeling of existing conditions and several combinations of remedial technologies (i.e. slurry walls, sheet piling, capping systems, extraction systems) were imposed. Analyzed the effectiveness of several proposed capping systems using the U.S. Army HELP model, which provides infiltration, surface runoff, and evapotranspiration rates for landfill caps.

North Franklin Street Site, New York
Lead Engineer and Groundwater Modeler for the remediation project at a former dry cleaning facility in Watkins Glen, New York. The project included using a numerical groundwater flow model as a means of designing the optimum capture system for contaminated groundwater. Designed and conducted a field investigation, including and aquifer pumping test. Developed a groundwater flow model. Designed a groundwater extraction system and soil vapor extraction system. Analyzed system performance. Presented findings to the regulating agency.

Miller Brewing Company, Fulton, New York
Design Engineer. Participated in the design of a molasses injection system for the in-situ anaerobic remediation of an aquifer contaminated with chlorinated solvents. Analyzed data and evaluated system performance.

PUBLICATIONS

Jacobi, J.W., Ostrowski, M., and Lysiak, J., 1996, Groundwater Extraction and Treatment, Twenty-Eighth Mid-Atlantic Industrial and Hazardous Waste Conference, SUNY at Buffalo.

Leonard, J.E. et al., 2002, Managing Hazardous Materials, Institute of Hazardous Materials Management.

PATRICIA R. PETRINO, P.E., P.P.

Experience Summary

Patricia Petrino has experience in consulting engineering for hazardous waste treatment and site remediation projects. Ms. Petrino prepared various aspects of remedial projects including treatment technology screenings, treatability testing, feasibility studies, and treatment system designs. Project work has also included the preparation of permits, state and federal, for various remediation projects. In addition, she has been involved in solid waste disposal projects including landfill closures, and landfill gas treatment system design. She also has performed oversight of remediation projects for government agencies and principle responsible parties.

Assignment

Permitting

Education

M.S., Civil Engineering, New Jersey Institute of Technology, 1983

B.S., Civil Engineering, University of Massachusetts, Lowell, 1978

Registration

Professional Engineer, New Jersey

Professional Planner, New Jersey

Experience

20 years

Joined Firm

1990

Hazardous Waste/Remediation

Large Retail Home Improvement Facility, Pelham, New York

Project Manager for preparation of detailed engineering design of a subslab vapor mitigation system for a large retail facility (approx. 100,000 sf). Responsibilities included site data review, preparation of detailed design engineering drawings and technical specifications for installation of an active subslab vapor mitigation system. Duties also included coordination with building design and engineering consultants, legal counsel and subcontractors.

Power Generation Station, Philadelphia, Pennsylvania

Project Manager for design and implementation of a Non-Aqueous Phase Liquid (NAPL) extraction system. This fast track project was conducted in response to potential impacts to an adjacent water body. Responsibilities included implementation of a site investigation (using 'soft dig' techniques), design and installation of a subgrade migration control system (sheet pile cut off wall), design and installation of an groundwater extraction and conveyance system, startup and trouble shooting, and continuing operations and maintenance activities. Activities also conducted include project administration, oversight of contractors, daily log sheet progress tracking, cost estimating, contractor management and invoicing, and project budget and schedule tracking.

New Office Complex, Schenectady, New York

Engineering Project Manager for preparation of design for a subslab vapor mitigation system for a proposed six story office building. Responsibilities included coordination with architects and other engineering disciplines, design of vapor mitigation system, preparation of technical specifications, and project submittals.

General Electric Aircraft Engines, Lynn, Massachusetts

Project Manager for preparation of a feasibility study and remedial action plan for a former aircraft engine manufacturing facility. The project, regulated under the Massachusetts Contingency Plan, included the assessment of a risk characterization for evaluation of remedial alternatives. The feasibility study included a technology screening, formulation of

remedial alternatives and a detailed evaluation of alternatives. The selected alternative included the installation of a geosynthetic capping system. The remedial action plan included the preparation of contract drawings and technical specifications.

Former Manufactured Gas Plant, National Grid, Malden, Massachusetts
Project Manager for preparation of a feasibility study and field pilot test for the remediation of a former manufactured gas plant site currently occupied by a commercial bakery facility. Groundwater contamination was present at the site with potential for indoor air contamination. Responsibilities include the preparation of a detailed evaluation and selection of a remediation alternative for the site (air sparging and soil vapor extraction). Duties included the design, implementation and summary analyses of a vapor extraction field pilot test. The project included the preparation of testing protocol, oversight of field activities, coordination and planning with manufacturing personnel (to avoid impacts to production requirements), evaluation of test data, preparation of a final report and full-scale construction cost estimates.

General Electric Aircraft Engines, Lynn, Massachusetts
Project Manager for investigation, characterization, and remediation of PCB contamination in a former manufacturing facility. The project included the preparation and implementation of a sampling and characterization program. Based on the results of the characterization plan, a remediation plan was developed including contract drawings and technical specifications for the decontamination of steel surfaces and scarification of concrete surfaces.

Closed Landfill, Edison, New Jersey
Project Manager for preparation of New Jersey Department of Environmental Protection (NJDEP) Freshwater Wetland and Waterfront Development Permits for construction of a leachate management system to be installed as part of the Closure/Post Closure Plan of this 131-acre landfill. Responsibilities included the preparation of permit applications, reports and drawings, and compliance statements in accordance with wetland regulations and coastal zone management rules.

Former Manufactured Gas Plant, Massachusetts Electric Company, North Adams, Massachusetts
Task Leader for preparation of a feasibility study for the remediation of contaminated soil at a former manufactured gas plant site that contained contaminated soils situated in former subsurface gasholder. Activities included formulation and detailed evaluation of remedial technologies for selection of a remedial alternative. Soil treatment selected included in situ thermal desorption with off-gas vapor treatment.

Former Manufactured Gas Plant Sites, New York
Task Leader for preparation of a cost benefit analyses for a client responsible for the remediation of two former manufacturer gas plant sites in upstate New York. The analyses include a comparative evaluation of the

benefits of ownership versus non-ownership during remedy implementation. Criteria included financial, legal, logistical, strategic and environmental, and construction costs.

Former Chemsol Manufacturing Facility, Piscataway, New Jersey
Task Leader for remedial actions for removal of contaminated soil and wetlands mitigation. Activities included the preparation of design documents for access and NJDEP Freshwater Wetlands Permit Applications for remedial actions. Tasks included preparation of layout drawings and details, and permit applications.

ISP Site, Linden, New Jersey
Task Leader for site remediation for a 125-acre former chemical manufacturing facility. This large-scale remediation was conducted in phases and included the demolition of existing facilities, installation of a low-permeability containment system, a groundwater extraction system and installation of a cover system for preparation of the site for Brownsfield redevelopment. Responsibilities included the preparation of NJDEP Freshwater Wetlands and Waterfront Development/Coastal Wetlands Permits and Soil Erosion and Sediment Control Plans for each phase of the project.

Reich Farms Superfund Site, Monmouth County, New Jersey
Project Leader for a soil remediation design for a Superfund in New Jersey. Activities included soil treatability screening evaluation for various soil treatment technologies, and preparation of detailed cost and excavation analysis.

Long Island Jewish Medical Center, Long Island, New York
Project Leader for the removal and replacement of leaking underground fuel oil storage tanks for a hospital facility in Long Island, New York. Responsibilities included management of removal activities, coordination with government agencies, design of a temporary replacement fuel storage system, design of a permanent replacement fuel oil storage system, and completion of application for various permits.

Princeton University, Princeton, New Jersey
Project Leader for the design of storm water basin modifications for a university in New Jersey. The university utilized their stormwater detention basin as an oil spill containment system. Responsibilities included the design of early warning oil detection and containment system for stormwater detention system, design of hazardous chemical spill containment pads, and basin discharge channel with oil spill containment features. Activities included the preparation of construction drawings and specifications for procurement.

Borough of Westwood, New Jersey
Project Leader for the preparation of a landfill closure permit for a municipal landfill in New Jersey. The closure plan included methane gas screening, hydrogeologic studies, statistical impact analysis for leachate migrating, design of a cap and methane gas venting system, and land use

planning. The project requirement preparation of permit drawings and a landfill closure plant report.

Fort Dix Military Base, New Jersey
Project Leader for implementation program design for an underground storage tank closure plan. Responsibilities included preparation of a bid package for removal of underground and aboveground tanks at a military facility in New Jersey. The bid package included specifications and drawings for the removal of the tanks, testing and analysis of contaminated soil, soil removal, and restoration of the site.

BZ Demilitarization Project, Pine Bluff, Arkansas
Contract Manager for construction of sophisticated chemical warfare agents incineration equipment. Responsibilities included the management of five separate contracts (totaling $5 million) for four types of incineration equipment and a material handling system, including a rotary kiln, a batch type, a liquid injection incinerator and an off-gas treatment afterburner. Specific tasks performed included review of vendor drawings, coordination of QA/QC and expediting personnel, reporting to government agencies and preparation of detailed monthly reports.

U.S. Environmental Protection Agency
Engineer for a major EPA study to determine priority pollutant removal levels at publicly owned treatment works plants. Responsibilities included preparation of sampling plane, coordination of field personnel and logistical planning for 24 hour/day sampling programs. Conducted sampling at various treatment facilities throughout the U.S.

U.S. Environmental Protection Agency
Co-editor of an EPA publication for innovative/alternative treatment technology assessments for wastewater treatment plants. Responsibilities included preparation of treatment technology "fact sheets" for each aspect of wastewater treatment.

Washington Public Power Supply System, Hanford, Washington
Field Engineer for a pipe hanger redesign program at a nuclear power plant. On-site fieldwork during construction of a nuclear power plant. Prepared retrofit hanger designs for pipe hangers with anchor bolt failures.

Memberships

Society of Professional Engineers
Society of Women Engineers

Publications/Presentations

"Ozonation for Waste Water Treatment," P.P. Sisovsky, New Jersey Institute of Technology, 1983.

"Innovative/Alternative Treatment Technology Assessment Manual," P.P. Sisovsky, et al., United States Environmental Protection Agency, 1978.

ADAM R. SHERMAN

Experience Summary

Adam Sherman is a senior engineer and project manager in the Engineering Services Department in Brown and Caldwell's Allendale, New Jersey, office. Mr. Sherman has experience in a range of environmental disciplines including remediation, wastewater, solid waste, stormwater, demolition, and construction. Project experience includes numerous feasibility studies, technology pilot testing, system designs, construction management, and operations and maintenance. He has direct experience through either pilot testing, design, or construction management with a range of technologies, including capping systems, excavation, soil vapor extraction, ex situ vapor and groundwater treatment systems, in situ groundwater treatment (chemical oxidation, enhanced bioremediation, MNA), in situ thermal desorption, Waterloo® barrier, and LNAPL collection. He has worked on remediation projects under various regulatory programs including CERCLA, RCRA, Brownfields and various State programs (including NJ, NY, MA, and PA).

Assignment

Remedial Design

Education

Masters of Engineering, Environmental Engineering, Cornell University, 2001

B.S., Environmental Systems Engineering, Cornell University, 2000

Registration

Professional Engineer

New Jersey - GE46227

New York (Pending)

Certification

OSHA – 40 Hours

OSHA – Supervisor Training

DOT HAZMAT Training

Experience

8 Years

Joined Firm

2001

Hudson County Chromate Chemical Production Waste Sites, Northern New Jersey

Project Manager/Engineer. Currently serving as Project Manager/Project Engineer for remedial designs and construction oversight at several chromite ore processing residue (COPR) disposal sites in northern New Jersey. Remedial designs primarily include surface caps and institutional controls. Responsibilities include preparation of work plans, design drawings and specifications, management of supporting engineers and field personnel, soliciting construction bids, bid evaluation, and construction observation/documentation. Performed a focused feasibility study (FFS) to evaluate conventional and innovative technologies to address hexavalent chromium [Cr(VI)] in soil and groundwater beneath an existing building. Researched case studies and remedial products to evaluate in situ treatment of hexavalent chromium, including nano zero valent iron, calcium polysulfide, ferrous sulfate, and sodium dithionite to promote chemical reduction of Cr(VI)and various organic substrates to promote biologically-mediated Cr(VI)reduction. FFS concluded that in situ treatment would not effectively or reliably achieve remedial goals in COPR matrices due to mass transfer/contact issues, and recommended capping, institutional controls, and long-term monitoring. The FFS is currently under regulatory review.

Corrective Measures Study - Former Chemical Manufacturing Facility, Harriman, New York

Task Manager/Engineer. Currently serving as task manager/engineer for a corrective measures study (CMS) to address constituents (primarily mercury) in soil at this 28-acre facility. Evaluating a range of alternatives including containment, excavation, on-site consolidation, and ex situ and in situ treatment (i.e., solidification/stabilization – S/S). To support a containment approach, utilizing multiple lines of evidence, including groundwater data, field observations, and results from mercury sequential extraction procedure (SEP) testing to demonstrate that mercury at the site is in a relatively immobile form and is not impacting groundwater.

Feasibility Study, Remedial Design, and Remedial Construction – Former MGP Site, North Adams, Massachusetts

Project Manager/Engineer. Served as project engineer for preparation of a feasibility study (Remedial Action Plan) and remedial design (Remedy Implementation Plan), in accordance with the Massachusetts Contingency Plan (MCP). Responsibilities included preparation of the groundwater portion of the feasibility study, which resulted in selection of enhanced monitored natural attenuation (MNA) (via in situ Submerged Oxygen Curtain [iSOC™]) in source area and MNA for the remainder of site groundwater. Prepared remedial design for groundwater remedy. Provided oversight of technology vendor (TerraTherm) for design, implementation, and operation of thermally-enhanced NAPL recovery followed by in situ thermal desorption (ISTD), which was selected for tar-impacted materials within a former 105,000-cf gas holder. Served as project manager for remedy implementation. Managed field and office personnel, contractors, and vendors during remedy construction, post-treatment soil sampling, and groundwater monitoring. Following a supplemental risk characterization using post-treatment samples, the gasholder area was successfully closed out. Currently serving as project manager for ongoing groundwater monitoring, reporting, and regulatory compliance activities.

Remedial Design and Construction - Former Chemical Manufacturing Facility, Linden, New Jersey

Project Manager/Engineer. Served as project engineer for design of a remedial action at a 143-acre former chemical manufacturing facility site. Following design, served as construction quality assurance inspector for client during implementation. Primary components of the design and implementation included 150,000 square feet (~1.6 miles long) of interlocking sheetpile cutoff wall (Waterloo Barrier®), perimeter shallow groundwater collection pipe (over 1.5 miles long), pumping stations, manholes, forcemain, electrical conduit, and grading and drainage for Brownfield Redevelopment. Prepared Remedial Action Report and Deed Notice following implementation of remedial actions. Currently serving as Project Manager for ongoing site monitoring and reporting activities.

Feasibility Study, Pilot Testing, Remedial Design - Former Manufacturing Facility, Northern New Jersey

Task Manager/Engineer. Served as task manager/engineer for remedial systems design at this former industrial manufacturing facility in New Jersey. The remedial systems include a soil vapor extraction (SVE) system, perozone sparging system (Perozone™ C-Sparging®), and groundwater extraction and treatment system to address chlorinated solvent impacts to site soil and groundwater. Planned and executed pilot studies for SVE and Perozone™ C-Sparging®. Prepared a Remedial Action Workplan and executed design of a 22-well, 1,800-scfm SVE and vapor treatment system and a 10-well perozone sparging system in accordance with the New Jersey Technical Requirements for Site Remediation and considering future Brownfield Redevelopment plans.

Feasibility Study, Pilot Testing, Remedial Design - Former Industrial Site/MGP Site, Eastern Massachusetts

Project Engineer. Prepared a pilot study work plan and provided implementation oversight for a groundwater pilot study using Hydrogen Release Compound (HRC®) to promote reduction of Cr(VI) in groundwater at a site which was the former location of a chrome manufacturing facility, an MGP, and an UST storage facility. Reviewed monitoring results and concluded that HRC® was able to reduce Cr(VI) concentrations in groundwater, however, increased percolation resulted in significant leaching from the source and precluded the ability of HRC® to maintain low levels of Cr(VI), without source control (i.e., low permeability cap). Prepared a Remedial Action Plan (RAP) to evaluate potential remedial alternatives to address soil impacted with chromium in a building crawl space. Selected an innovative capping approach involving a spray-applied membrane (Liquid Boot®) to provide a capillary break to restrict the upward migration of chromium salts and a direct contact barrier. Prepared the design and Remedy Implementation Plan (RIP) for the selected remedy. Provided engineering support during successful implementation of the design.

Remedy Design - Former Industrial Site/MGP Site, Chester, Pennsylvania

Project Engineer. Served as project engineer for a remedial design to control LNAPL seeps along the riverbank of the Delaware River at a site that was the former location of various industrial and manufacturing facilities. The design included a French drain, collection sumps, and tie-in/retrofitting to an existing vacuum pumping system serving a network of bioslurping wells. Following design, provided implementation and field testing support for field personnel, interfaced with contractor to resolve construction issues, and reviewed contractor submittals and shop drawings.

Feasibility Study, Pilot Testing, Remedial Design - Active Steel Milling Facility, Eastern Massachusetts

Project Engineer. Prepared a Remedy Implementation Plan (RIP) to address environmental media impacted by chlorinated solvents (primarily 1,1,1-TCA) at this active steel milling facility. Prepared a remedial design and implementation plan for in situ chemical oxidation (ISCO) to address a groundwater hot spot. Prepared an ISCO field protocol and provided oversight during ISCO chemical injections (Fenton's Reagent).

Pilot Testing, Feasibility Study, Remedial Construction – Area 2 of the Troy (Water Street) Former MGP Site, Troy, New York

Task Manager/Engineer. Served as task manager and project engineer for a field pilot test of in situ chemical oxidation via Fenton's Reagent. Prepared a work plan for submittal to NYSDEC. Prepared a field protocol and health and safety plan for ISCO pilot testing. Educated field personnel on ISCO prior to implementation. Managed field personnel, contractors, and vendors during implementation of the field pilot test. Pilot test injections included approximately 4,750 lbs ferrous sulfate, 26,000 lbs hydrogen peroxide, and 1,700 gallons of 35% phosphoric acid. Reviewed and evaluated groundwater and vadose zone monitoring data and prepared reports for submittal to NYSDEC. Study concluded that ISCO was

infeasible for the site and the results were used to demonstrate that a modification of groundwater remedy for the site was necessary.

Project Manager/Engineer. Served as project manager/engineer for preparation of feasibility evaluations, technology evaluations, volume estimates, and cost estimates to support modification of the remedy selected in the Record of Decision (ROD). Participated and presented at meetings with the NYSDEC to summarize findings of investigation activities, technical basis for modifying the ROD-Selected Remedy, and potential alternate remedial approaches to achieve remedial objectives. Performed a detailed evaluation of alternatives and prepared a report for submittal to NYSDEC (currently under regulatory review), to establish the Site Conceptual Model, present the results of a detailed evaluation, and recommend and justify a revised comprehensive remedial action alternative. Prepared work plans for implementation of components of the remedy to address purifier waste deposits and waste materials contained within multiple subsurface structures for submittal to NYSDEC. Prepared bid documents and performed bid evaluations. Managed construction oversight, waste characterization, and waste management activities for implementation of the purifier waste deposit removal (~ 400 cy) and cleanout of four subsurface structures of various sizes and configurations (~1,625 cy of coal tar-impacted material).

Feasibility Study - Sediments Operable Unit, Troy (Water Street) Former MGP Site, Troy, New York

Project Engineer. Prepared a preliminary feasibility study, for submission to NYSDEC, for remediation of Hudson River sediments adjacent to upland areas where a former MGP was situated. Performed FS, in accordance with NYSDEC and EPA guidance, to demonstrate that additional investigation was required to close data gaps in the RI and facilitate a more thorough alternatives evaluation and to demonstrate that upland remediation should take place before sediment remediation. Presented advantages and disadvantages of several potential sediment remedial alternatives, including monitored natural attenuation, in situ subaqueous capping, mechanical and hydraulic/pneumatic dredging.

Remedial Design Supporting Documents - Seneca Meadows, Inc., Waterloo, New York

Project Engineer. Prepared supporting documents for a landfill final cover construction project. Documents included a construction quality assurance/construction quality control plan, HASP, and contingency plan.

Memberships

American Society of Civil Engineers

Publications

1. Sherman, A.R., Caputi, J.C., and Kessel, S.A., "In Situ Bioremediation of PAHs and VOCs at an MGP," Presented at the Eight International In Situ and On-Site Bioremediation Symposium, June 6-9, 2005, Baltimore, Maryland.
2. "Implementation of Co-Composter: An Excel Spreadsheet for Design of Composting and Co-Composting Systems," A.R. Sherman, Master of Engineering Project, Cornell University, Ithaca, New York, May 2001.

TAMARA L. SORELL, PH.D.

Experience Summary

Tamara Sorell completed her doctoral work specializing in heavy metal toxicology and has since spent over 22 years performing risk assessments in environmental consulting. She has extensive regulatory experience in various programs involving solid waste, hazardous waste and industrial sites. She has a successful track record of negotiating with regulators to achieve client objectives using risk based, statistical, and data analytical approaches. She has worked extensively with attorneys and has provided expert testimony.

Assignment
Project Manager

Education
Ph.D., Pharmacology, Columbia University, 1988
A.B., Biochemical Sciences, Princeton University, 1981

Experience
22 years

Joined Firm
2003

Relevant Expertise
- *Heavy metal toxicology*
- *Development of site-specific cleanup objectives*
- *Data quality review*
- *Vapor intrusion*
- *Integration of risk into the investigation and remediation process*

Liability Transfer Corporation RCRA Corrective Measures Study, Harriman, New York

Project Manager. Managing a Corrective Measures Study for a former manufacturing facility that has widespread mercury (Hg) contamination in soils. Submitted a Work Plan to NYSDEC for mercury speciation that was prepared in conjunction with a nationally recognized mercury analytical expert. Coordinating with the NYSDEC Project Engineer and Chemist to finalize the program, which will allow application of a soil cleanup objective well above the published NYS value. Previous studies at the site using Hg sequential extraction have indicated that the Hg at the site is likely to exhibit low environmental mobility and bioavailability.

LCP Chemicals, Inc., Superfund Site, Linden, New Jersey

Task Manager. This CERCLA site is a former Chlor-Alkali facility characterized by extensive mercury contamination. Integrated data from mercury soil, soil vapor, sediment, groundwater, and biological data into the Remedial Investigation and human health and ecological risk assessments. Mercury vapor sampling was performed using low-level EPA Method IO-5. Various speciation tools were applied, including methyl Hg analysis, Hg sequential extraction analyses for soil and sediment, and quantification of various organic and inorganic arsenic forms.

Mercury Refining Superfund Site, Colonie, New York

Project Manager. Managing the Remedial Design for a mercury-contaminated Region 2 Superfund site. Attended public meeting ad part of comment preparation on the Proposed Plan. Provided technical comments on the Feasibility Study and Proposed Plan that addressed the remedy in the context of mercury forms at the Site. Met with EPA to present the proposed Pre-Design Investigation and to assist in negotiation of the Consent Order and Statement of Work. .Currently initiating Work Plan development.

Confidential Developer, Charlestown, Massachusetts

Technical Advisor. Developed risk-based, site-specific air thresholds for particulates and volatile organics as part of a Release Abatement Measure (RAM) plan in support of a proposed remedial construction project in a residential community. The primary contaminant of concern in dust emission was lead. Separate thresholds were calculated for perimeter and on-site monitoring. Gave a successful presentation at the public meeting

that reassured community members opposed to the project that there would be no unacceptable human health risks. The project was completed with no resident complaints.

General Signal Corporation, Jefferson County, New York
Project Manager. Managed several phases of a New York State Superfund project. Wrote Work Plans, hired and oversaw subcontractors, developed and managed a groundwater delineation program, evaluated air impacts, and performed risk assessments. Developed site-specific cleanup soil cleanup goals for four metals, which were approved by NYSDEC. Also submitted human health and ecological risk assessments for these metals in stream sediments that resulted in a no action determination for half the stream length.

Troy Chemical Corporation, Inc., Hazardous Waste Consulting Services, Newark, New Jersey
Project Manager. Manager for over 10 years for a State Superfund site with mercury-contaminated soils, groundwater, surface water and sediment. Coordinated site investigations and risk assessment. Wrote work plans and remedial investigation reports. Provided remedial cost estimates and preliminary conceptual remediation models. Worked extensively with legal counsel and provided litigation support. Coordinated with state and municipal authorities regarding site and regional planning issues. .

Major Automotive Manufacturer, Cleanup Goal Development, New York
Risk Assessor. Developed site-specific lead and PCB cleanup goals for an industrial setting. Goals were based on occupational parameters and were calculated using air emissions modeling and biokinetic uptake estimates.

Brown's Dump Superfund Site, Lead Risk Evaluation, Jacksonville, Florida
Project Manager/Risk Assessor. Performed an area-wide lead hazard analysis for a community overlying lead-contaminated municipal solid waste incinerator ash. A substantial database of lead soil and blood lead data were evaluated. The report provided a set of recommendations for site management and exposure mitigation through a combination of targeted risk management tools.

Major Defense Contractor, Human Health and Ecological Risk Assessment, Syracuse, New York
Risk Assessor. Provided technical support over several years to support formulation of remedial action objectives and quantitative cleanup goals for contaminated sediments and soils. Completed human health and ecological risk assessments for in a stream receiving historical site discharge as well as numerous urbanized inputs. Contaminants of concern included cadmium, lead, copper, and zinc. Detailed biological field work was used to convince the regulators that typical risk model sensitive species would not be present; the use of less sensitive indicator species prevented risk over-estimation.

Confidential Manufacturing Client, Linden, New Jersey
Risk Assessor. Managed a forensic sediment investigation to support a Natural Resource Damages defense for a site with heavy metals in an adjacent tidal sediment zone. Hg was the principal contaminant of concern. The program included chemical sampling, a historical drainage assessment, and radiometric core dating. Co-authored an NRD "white paper" with the legal team and other consultants.

Publications and Presentations

1. Jaglal, K and T. Sorell. Tailoring Risk Assessments to Obtain Sensible, Site-Specific Solutions. Presented at the Sediment Management Work Group Fall Conference, Saratoga Springs, New York, September 2009.
2. Sorell, T.L. Risk Assessment and Risk Management: the Big Disconnect. Society of Environmental Toxicology and Chemistry, Annual Meeting, Portland, Oregon, November 2004.
3. Sorell, T.L. Effective Integration of Risk Assessment in Remedial Decision Making. Society of Environmental Toxicology and Chemistry, Annual Meeting, Portland, Oregon, November 2004.
4. Sorell, T.L. Sampling Strategies to Support Human Health and Ecological Risk Evaluation. Presented at Society of Environmental Toxicology and Chemistry, Annual Meeting, Salt Lake City, Utah, November 2002.
5. Sorell, T.L. Human and ecological risk assessment: toward an integrated approach. SETAC Globe 3(5):23 24, 2002.
6. Sorell, T.L. A Framework for Integrating Human Health and Ecological Risk Assessment. Presented at the Society of Environmental Toxicology and Chemistry, Annual Meeting, Baltimore, Maryland, November 2001.
7. Sorell, T.L. New EPA Ecological Risk Assessment Guidance: Applications for Industrial Sites, EMCON Reporter 5(3):7, 1998.
8. Sorell, T.L. Evaluation of Ecological Risk in an Estuarine Marsh Post-Remediation: Comparison of Field-Collected and Laboratory-Based Sediment-To-Tissue Bioaccumulation. Presented at the Society of Environmental Toxicology and Chemistry, North Atlantic Chapter Annual Meeting, Newport, Rhode Island, April 1996.
9. Sorell, T.L. Perspectives on Risk-Based Cleanup. Tri-State Real Estate Journal 13(39), 1996.
10. Sorell, T.L. Negotiating a Better Deal: Development of Site-Specific Cleanup Goals. Invited Presentation, Environmental Breakfast Club, Syracuse, New York, September 1995.
11. Sorell, T.L. Use of Multiple Approaches to Establish Appropriate Sediment Remediation in a Contaminated Creek. Presented at the Society of Environmental Toxicology and Chemistry, North Atlantic Chapter Annual Meeting, Plymouth, Massachusetts, July 1995.
12. Sorell, T.L. Use of Equilibrium Partitioning to Develop Sediment Criteria Protective of Wildlife. Presented at the Society of Environmental Toxicology and Chemistry, Annual Meeting, Denver, Colorado, October 1994.
13. Sorell, T.L. Environmental Assessments Completed for Superfund Sites. Presented at the Society of Environmental Toxicology and Chemistry, Annual Meeting, Seattle, Washington, November 1991.
14. Sorell, T.L. Updates in USEPA Risk Assessment Guidance. Presented at Society for Risk Analysis Annual Meeting, New Orleans, 1990.
15. Sorell, T.L. Methodological Flaws in Risk Assessment. The Analysis, Communication and Perception of Risk. . Plenum Publishing Corp., 1991. Presented at Society for Risk Analysis Annual Meeting, San Francisco, 1989.
16. Sorell, T.L. Interactions of Cadmium and Zinc during Pregnancy. Doctoral Thesis, Columbia University, New York, New York, 1988.

17. Sorell, T.L. and Goldberg, S.P. The Source of Iron and Manganese in Groundwater Associated with a Solid Waste Facility. Presented at the EMCON Solid Waste Conference, Phoenix, Arizona, June 1994.
18. Sorell, T.L. and J. Graziano. Effects of Cadmium Exposure during Pregnancy on Zinc Metabolism. Toxicol. Appl. Pharmacol. 102:537-545, 1990.
19. Sorell, T.L. and J. Graziano. Cadmium Exposure during Pregnancy Does Not Alter Placental Zinc Transport in the Rat. Fed. Proc. 46:557. Presented at the FASEB Annual Meeting, Washington, D.C., 1987.
20. Sorell, T.L. and Henry, L. A Review of Studies Designed to Validate the Johnson and Ettinger Vapor Intrusion Model. Presented at Battelle Conference "Remediation of Chlorinated and Recalcitrant Compounds," Monterey, CA, May 2006
21. Sorell, T.L. and Jaglal, K. Tailoring Risk Assessments to Obtain Sensible, Site-Specific Solutions. Accepted for presentation at the Sediment Management Work Group (SMWG) Fall Forum, Saratoga Springs, New York, September 2009.
22. Sorell, T.L. and Kapp, R.M. Assembly of a Sediment Quality Database for a Major River Estuary. Presented at the Society of Environmental Toxicology and Chemistry, North Atlantic Chapter Annual Meeting, Portland, Maine, June 1997.
23. Sorell, T.L. and Tompkins, D.B. A Tiered Scaling System for Developing Site-Specific Cleanup Goals for Aquatic Sediments. Presented at the Society of Environmental Toxicology and Chemistry, Annual Meeting, Nashville, Tennessee, November 2000.
24. Sorell, T.L. and Tompkins, D.B. A Tiered Approach to Select Remedial Strategies for an Urbanized Watershed with Multiple Stressors. Presented at the Society of Environmental Toxicology and Chemistry, North Atlantic Chapter Annual Meeting, Newport, Rhode Island, April 2000.
25. Sorell, T.L. and Trent, C.E. Use of Real-Time Perimeter Air Monitoring To Manage Response Action during MGP Remedial Activities. Accepted for presentation at the Electric Power Research Institute (EPRI) MGP 2010 Conference, San Antonio, TX, January 2010.
26. Tompkins, D.B. and Sorell, T.L. Evaluation of Ecological Risk in an Estuarine Marsh Post-Remediation: Comparison of Field-Collected and Laboratory-Based Sediment-To-Tissue Bioaccumulation. Presented at the Society of Environmental Toxicology and Chemistry, North Atlantic Chapter Annual Meeting, Newport, Rhode Island, April 1996.
27. Tompkins, D.B. and Sorell, T.L. Development of a Biota Monitoring Program to Assess Effectiveness of Sediment Remediation. Presented at the Society of Environmental Toxicology and Chemistry, North Atlantic Chapter Annual Meeting, Plymouth, Massachusetts, July 1995.

Professional Activities

ITRC Contaminated Sediments Team. Ongoing. Principal Guidance Document Author. Screening Subcommittee Chair. Winner, Industry Recognition Award, 2008.

Participant, Industry Affiliate Program, Montclair State University Department of Environmental Management (pending).

Short Course Co-Chair/Instructor: "A Toolbox of Techniques to Generate Data for Ecological Risk Assessments - Characteristics, Costs, and Case Studies." Society of Environmental Toxicology and Chemistry, Annual Meetings, 2002-2004.

Technical Platform Session Co-Chair: "Data Collection for Human Health & Ecological Risk Assessment. Society of Environmental Toxicology and Chemistry, Annual Meeting, Salt Lake City, Utah, November 20, 2002.

Society of Environmental Toxicology and Chemistry, N. Atlantic Chapter. President. 2000-2001; Board Member 1998-2002.

Invited Technical Reviewer, Maine Marine Research Fund, 2002.

Experience Summary

Mr. Paul J. Thorn provides Project Management, Risk Assessment, Technical, and Geographic support on projects conducted by Brown and Caldwell. Primary duties include conducting human health and ecological risk evaluations, soil vapor intrusion investigations, Geographic Information Systems (GIS) activities, and other investigative activities such as Phase I investigations, Baseline Ecological Evaluations, and Preliminary Assessments. Other tasks include database management, report authoring, and production support.

Assignment

Vapor Intrusion/Air Monitoring

Education

B.S. Biology, State University of New York, College at Geneseo, 2000

M.P.S, State University of New York College of Environmental Science and Forestry, 2002

Experience

7 years

Joined Firm

June 2002

Certifications

- *40-Hour HAZWOPER Training*
- *OSHA 8-Hour Training for Supervisor*
- *OSHA 10-Hours Construction Safety*
- *Certified for Adult CPR*

LCP Chemicals Superfund Site, Linden, New Jersey

Environmental Scientist. Prepared comprehensive site-wide Remedial Investigation Report. Prepared extensive GIS mapping of groundwater, soil, sediment, biota, and surface water investigation results. Gathered and integrated regional contaminant databases into current investigation activities. Conducted field groundwater and surface water sampling.

BFI Inc., Pedricktown, New Jersey

Environmental Scientist. Managed a supplemental remedial investigation, identifying groundwater contamination source areas, and reporting on long term monitoring activities.

Wakefield Municipal Gas and Light Department, Wakefield, Massachusetts

Environmental Scientist. Prepared a Stage II Environmental Risk Characterization, evaluating ecological risk associated with sediment contamination in Lake Quannapowitt relating to a former manufactured gas plant.

Wyeth, Cranford, New Jersey

Environmental Scientist. Managed soil-vapor intrusion investigation including sub-slab soil vapor sampling. Prepared investigation reports for submittal for NJDEP.

H. Hovnanian, Toms River, New Jersey

Environmental Scientist. Managed a Site Investigation including indoor air and soil vapor investigation activities and report authoring. Prepared a Remedial Investigation Workplan with accompanying Baseline Ecological Evaluation.

Major Telecommunications Company, Passaic County, New Jersey

Environmental Scientist. Conducted a field evaluation of vapor intrusion risks including sampling of indoor air and sub-slab soil vapor.

Confidential Client, Kearny, New Jersey

Environmental Scientist. Prepared public notification submittals under NDJEP regulation.

GIS Analyst. Prepared GIS files for CEA and deed notice submissions in formats compatible with NJ state GIS criteria. Utilized NJ aerial photography to register AutoCAD drawings and analytical data into proper coordinate system.

Boarhead Farms, Upper Black Eddy, Pennsylvania
Environmental Scientist. Managed a soil vapor intrusion investigation under USEPA oversight, including indoor air and sub-slab soil vapor sampling.

GIS Analyst. Mapped the locations of groundwater monitoring activities and sampling results as well as magnetic anomaly locations. Prepared maps to accompany a Supplemental Design Investigation Report. Ongoing mapping support for long term monitoring.

Nepera Plant Site, Harriman, New York
Environmental Scientist. Prepared GIS analysis maps of soil and sediment sampling as part of a remedial investigation. Evaluated potential Vapor Intrusion risks to future development scenarios using the Johnson and Ettinger Model.

BFI, Inc., Fall River, Massachusetts
Environmental Scientist. Conducted Method 3 Human Health Risk Assessment under the Massachusetts MCP. Evaluated site specific groundwater and surface water data to evaluate potential for adverse human health effects associated with site contaminants.

GIS Analyst. Prepared maps of site including bedrock contours, groundwater contours, regional features, and three dimensional modeling. Utilized MA state GIS data layers in combination with site specific data to conduct multi-layer geographic analysis.

First Energy, Newton, New Jersey
Environmental Scientist. Prepared a Baseline Ecological Evaluation as part of a larger remedial investigation. Evaluated site area for sensitive ecological receptors and the potential for impacts from site-related contaminants. Prepared both a New Jersey ISRA Preliminary Assessment Report and an ASTM compliant Phase I Environmental Site Assessment.

Active Industrial Facility, South Boston, Virginia
Environmental Scientist. Conducted a Human Health Risk assessment under Virginia Department of Environmental Quality regulations to evaluate potential risks to on-site workers and off-site residents from exposure to chlorinated solvents in soil and groundwater.

Charlestown Navy Yard, Boston, Massachusetts
Environmental Scientist. Conducted Method 3 Human Health Risk Assessment under the Massachusetts MCP. Evaluated soil contamination risks to human health for a residential re-development of harbor side property.

Printing Facilities, Hackensack Meadowlands, New Jersey
Environmental Scientist. Prepared both New Jersey ISRA Preliminary Assessment Reports and ASTM compliant Phase I Environmental Site Assessments for five individual printing plants in the Hackensack Meadowlands region of New Jersey.

Novartis, Summit, New Jersey
GIS Analyst. Summarized collections of laboratory data into NJ State HAZSITE electronic data submittal format. Geo-rectified site base maps to extract soil boring locations for inclusion in data submittals.

Experience Summary

Karina Tipton is a Senior Engineer in the Engineering Services Department of Brown and Caldwell's Allendale, New Jersey office. Ms. Tipton has over eight years' experience in the design, implementation, and documentation of remedial actions and related engineering services. She has served as assistant project manager, task manager, and team member for a wide range of projects including site investigation, remedial system design, remedial design implementation, technical report preparation, and construction oversight and inspection.

Ms. Tipton has widely varied consulting and project management experience committed to achieving proactive solutions to environmental problems utilizing sustainability and environmental efficiency methods, and her experience at Brown and Caldwell and with previous employers includes the following.

Assignment
Green Remediation/Sustainability

Education
M.S. Environmental Engineering (Green Design); Carnegie Mellon University, 2004
B.E. (Civil Engineering; Cooper Union for the Advancement of Science and Art, 1999

Registration
Registered Professional Engineer, New York; New Jersey (pending)
LEED Accredited Professional

Memberships
Member of ASCE, SWE, WEA, and the Sustainability Group

Certifications
OSHA – 40 Hours
OSHA – Supervisor Training

Experience
8 Years

Joined Firm
2009

Relevant Expertise
- *Implementing sustainable development projects*
- *RI/FS*
- *Remediation Operations/Remedial System Optimization*
- *NJDEP Grace Period Rules*

Investigation and Remedial Action, Manufactured Gas Plant, New Jersey

Project Engineer. Developed and implemented remedial investigations of a former manufactured gas plant in central New Jersey. Evaluated impacts to groundwater and site soils in a tidally influenced area with active community advocates. Evaluated data and prepared Remedial Investigation Reports and Remedial Action Work Plans. Managed field and office personnel and contractors during investigation and remedy construction phases.

Investigation of Former Manufactured Gas Plant, Central New Jersey

Project Engineer. Investigation and preparation of a remediation work plan for the remediation of a former manufactured gas plant site currently occupied by a commercial automotive body shop. Groundwater contamination was present at the site and in fractured bedrock with potential for indoor air contamination. Responsibilities include the preparation of a detailed evaluation and selection of a remediation alternative for the site. The project included the preparation of testing protocol, oversight of field activities, coordination and planning with local residence and site personnel, evaluation of test data, preparation of a final report and conceptual construction cost estimates.

Remedial Investigation and Feasibility Studies, Syracuse, New York

Deputy Project Manager and Environmental Engineer. Tasks include project management, coordination with clients, subcontractors, and reviewing agencies; supervising staff technically and administratively; mentoring staff and helping them to achieve their professional development goals; use of strong communication skills and solid grasp of environmental rhetoric to guide and aid in communication and team-building between clients, reviewing agencies, and other interested parties; data management and analysis (including graphical presentation); development and management of budgets and preparation of scopes of work; directing and scheduling environmental sampling and remediation system installation; development and preparation of proposals for future work; and preparation

and review of various reports, including work plans, interim remedial measures (IRMs), remedial investigations (RIs), remedial action work plans and reports.

Groundwater Remediation Design, Implementation, and Monitoring, Various, New Jersey
Associate Project Manager/Project Engineer. Tasks included project management, coordination with clients, subcontractors, and reviewing agencies. Semi-annual monitoring of groundwater contamination, design, operations and maintenance of air sparge, pump-and-treat, and bio-sparge systems, and in situ remediation systems via Enhanced Reductive Dechlorination (carbohydrate injections to groundwater). Investigation, sediment, groundwater and soil remediation at former Manufactured Gas Plant facilities. Clients include: various public and private clients, ranging from government agencies to large industrial and manufacturing clients.

ISRA Investigation and Remediation, Bergen County, New Jersey
Associate Project Manager/Project Engineer. Managed the investigation and remediation of numerous Areas of Concern at this former industrial facility, in accordance with the New Jersey Industrial Site Remediation Agreement (ISRA) program. The investigation included the delineation of chlorinated volatile organic compound plumes in overburden and bedrock. Remediation included excavation, hot spot remediation, in situ bioremediation, and natural attenuation. Completed a Baseline Ecological Investigation and negotiation with NJDEP for permit-to-discharge to groundwater as part of the remedy.

Remedial Action, Former Transformer Site, Harrison, New Jersey
Project Engineer/Task Manager. Evaluated historic investigations and prepared data gap investigation work plans. Supervised implementation of investigations and development of remedial work plan for full removal of soils contaminated with PCBs to NJDEP unrestricted use criteria. Worked closely with client to solicit bids and award contract, supervised staffing of oversight and collection of post-excavation samples, and prepared remedial action report.

Investigation of Former Manufacturing Site, Kearny, New Jersey
Project Engineer. Developed investigation work plans and supervised implementation at a complex former manufacturing site in Hudson County, NJ, with over 20 historic AOCs. Negotiated with NJDEP to consolidate and restructure AOCs to expedite site closure. Worked with new site owner to establish access during 24-hour large vehicle operations. Prepared significant Remedial Investigation Reports and presented to NJDEP during meetings with case manager.

Military Base Remediation, New Jersey
Project Engineer/Phase Manager. Responsible for bringing 146 Areas of Concern (AOCs) from Feasibility Study to closure in three years. Site challenges include wide-spread low level soil contamination, aggressive budget and schedule, dual agency reviews, activities on an active military

installation, and management of large number of sites in concurrent document streams.

Educational Facilities, Various, New Jersey
Associate Project Manager/Project Engineer. Managed a variety of school investigation projects for the New Jersey School Development Authority. Projects include: Investigation of proposed school sites with environmental impacts, including investigation, remedial action, and reporting performed within a tight schedule to avoid delays in school openings. Also managed several MBE/WBE subcontractors during evaluation of emergent conditions in existing schools resulting in Determination of the most effective remedy to address severe failures in existing infrastructure.

Sustainable Development/Sustainability Analysis
Provided sustainability analysis and environmental optimization services. Relevant Projects include: "Creating Incentives for Energy Reduction at CMU: Cost Benefit Analysis for Installation of Electricity Sub-Meters in Baker and Porter Halls," "A Life-Cycle Analysis of Cork Flooring," and "The Future of Carnegie Mellon University's Vehicle Fleet: How Feasible is Automotive Sustainability?"

Publications

1. "Environmental Indicators for Carnegie Mellon: Assessment of a University," K. Tipton, Master of Engineering Project, Carnegie Mellon University, Pittsburgh PA, 2005. Presented at 2006 Annual Meeting of NY Water Environment Association, NY, NY; 2006 Chemistry Council of NJ 22nd Annual Spring Conference.

KLEINFELDER
Bright People. Right Solutions.

DAVID B. TOMPKINS, CWB, PWS
Regional Environmental Permitting & Practice Lead

Education
- BS Environmental Science and Geography, University of New York System: Plattsburgh, New York
- MS Wildlife Ecology, West Virginia University

Registrations
- Professional Wetland Scientist
- Certified Wildlife Biologist/Wildlife Society
- Certified Subsurface Evaluator DEP, NJ

Professional Affiliations
- Assoc. of State Wetland Managers
- SETAC-North Atlantic Chapter
- National Registry of Environmental Professionals

Certifications/Training
- OSHA 40-hour Hazardous Waste Operations
- OSHA 8-hour Supervisor, Endangered and Threatened Species
- Freshwater Wetlands Construction Techniques
- Hydric Soils
- Wetland Evaluation Technique (WET II), Wetland Training Institute

Summary of Experience

Mr. Tompkins has 25 years of experience conducting and managing biological and environmental investigations and providing wetland consulting services. His work has included environmental impact statements, hazardous waste remediation projects, wetland delineations, permitting and mitigation, hazardous waste sampling analyses, biological monitoring, endangered species studies and permitting for hazardous waste and commercial development projects. He is well versed in regulatory permitting, regulatory negotiations, and compensatory mitigation.

Select Project Experience

HABITAT/BIODIVERSITY EVALUATION

LCP Chemical Superfund Site, Ecological Survey, Habitat Assessment, and Biotia Sampling, Linden, NJ
Mr. Tompkins designed and conducted various ecological surveys at the subject site to assist Brown and Caldwell with the characterization of the ecological community as well as to provide food chain pathway analysis and raw data for the analysis of wildlife contaminant uptake and bioaccumulation. Species of concern included fish, benthics, birds and mammals. The habitat assessment was designed to identify species which may have been impacted from land uses changes and not former site activities. Project reports were included in the RIFS documents submitted to USEPA.

Karner Blue Butterfly And Blue Lupine Surveys, Habitat Conservation Plan, National Grid, Albany, Schenectady, Saratoga, And Warren Counties, NY
Directed surveys along all National Grid utility right-of-ways (ROWs) within sand plain areas of New York State. Surveys consisted of transecting ROWs and mapping populations of blue lupine (*Lupinus perennis*), and any associated Karner blue butterflies (*Lycaeides Melissa smauelis*) or frosted elfins (*Callophrys irus*) using Trimble GPS units. Currently directing the preparation of a habitat conservation plan and incidental take permit for National Grid, for management operations along these ROWs, in consultation with the US Fish and Wildlife Service and the New York State Department of Environmental Conservation. This includes completing necessary documentation under NEPA and SEQRA.

Stream Assessments, Syracuse, Watertown, German Flats, Chazy, NY
Using either the Hilsenhoff Biotic Index or The Rapid Bioassessment Protocols established by USEPA and various state agencies, stream assessments were conducted at a variety of sites in support of ongoing remedial investigation being conducted under the NYSDEC Superfund program. These assessments included benthic sampling for macro invertebrates (including taxonomic enumeration), fish

surveys seining and electro-shocking), and habitat assessments to determine the level of impairment on a given stream from both anthropogenic sources and site contamination. Several of these studies focused on the bioaccumulation of contaminants in the food chain. In some cases, stream remediation and subsequent restoration was required and implemented. Two specific studies included the impacts of site contaminants on the reproductive potential of mink and on piscivorous birds.

Bloody Brook Sediment Investigation, Lockheed Martin Corp., Syracuse, NY
Conducted sediment sampling and ecological surveys along a 3+ mile section of stream, which was a tributary to Onondaga Lake. Negotiated extensively with NYSDEC on clean-up goals, and selection of appropriate receptor species for bioaccumulation studies. Special consideration was given to mink due to potential reproductive failure, and piscivorous bird species and potential for bioaccumulation of toxic levels of various heavy metals.

Ecological and Sediment Investigation, New York Air Brake, Watertown, NY
Over a period of several years, (mid to late 1990's) personally conducted numerous ecological investigations regarding the deposition /remediation of contaminated sediments in tributaries of the Black Dirt River. Special emphasis was placed on the bioaccumulation of heavy metals in crawfish and the subsequent uptake by mink along the river corridor. Other species included earthworms, fish, benthic macro-invertebrates and avian species. Involved in various discussions over the presence of mink and the appropriateness of the species as a receptor species.

Indiana Bat Evaluations, Various Clients, Hudson Valley, NY
Supervised and performed numerous habitat evaluations for Indiana Bats focused on identifying roost and maternity trees for nesting females. Activities have also included mist netting and radio tracking. Project work is routinely reviewed by USFWS and NYSDEC staff. Also performed exit counts and roost tree identification using radio telemetry as part of Hudson Valley monitoring program.

Eastern Timber Rattlesnakes Population Study Rockland County, NY
Conducted a 4 year study identifying population levels, den and basking area locations using live capture and radio telemetry techniques, performed den surveys, and overall evaluation of habitat suitability and impacts from development projects.

General Wildlife Survey, Various Clients, NY And NJ
Routinely evaluate sites for identification of natural resources (wildlife and plant species) and evaluate impacts from proposed development projects. This evaluation includes site visits, historical data source review, interpolation from existing habitat conditions and known reference site conditions and species assemblages. Commonly, this work includes specific focus on migratory songbirds and reptiles and amphibians.

WETLAND DELINEATION AND PERMITS

Buckeye Pipeline Company, Wetland Delineation and Permitting, Sewaren, NJ
To replace a damaged cathodic protection system associated with a pipeline crossing a tidal marsh wetland, Kleinfelder conducted a wetland delineation, and permitting exercise to allow Buckeye to successfully complete onsite activities required to maintain the integrity of the pipeline system.

Ames Rubber, Wetland Delineation and Permitting, Totowa, NJ
Kleinfelder staff delineated onsite wetlands and obtained necessary approvals to conduct a remedial investigation inside the transition zone and wetland area of a palustrine forested wetland. Necessary improvements will include monitoring well installation and construction of a work area. Site restoration recommendations were included.

NYSDOT Pin 9804.17.101 Contract D015617 Pin S082.00, Wetland Delineation For Bridge Rehab/Replacement, Interstate Bridge #7, Town Of Calicoon, Sullivan County, NY

Mr. Tompkins directing staff flagged the boundary of each onsite wetland in accordance with the Army Corps of Engineers Wetlands Delineation Manual. The work was preformed during the appropriate field season (i.e. growing season) and the limits of the delineation where 500 feet upstream of the proposed crossing "D" to 500 feet downstream of the proposed crossing "F". In addition to flagging the river bank, wetland areas surrounding proposed construction access roads were surveyed. Data points and representative photographs of the uplands and wetlands were taken for inclusion in the delineation report. The report consisted of the introduction of the area including discussion of site location, limits of study area, soils, hydrology, plant communities, and existing mapping resources. In addition, provided was the approximate total wetland area and approximate wetland area within the proposed road crossings, as well as an opinion on the regulatory status of the wetlands on site.

Moore Project, WCI/Spectrum, East Fishkill, NY
Assisted project team with the delineation and assessment of on-site wetlands, development of permit documents, and mitigation plans. Project activities included extensive negotiations with USCOE for permit issuance.

The Marketplace, Wilder Balter Partners, Newburgh, NY
Project included the delineation of wetlands on a 108-acre parcel and the subsequent obtainment of a jurisdictional determination (JD). As part of the JD negotiations, approximately 4 acres were determined to be isolated pursuant to the SWANC decision.

Site Development and Permitting, Stone Industries, Ramapo, NY
As project manager and senior biologist, Mr. Tompkins provided environmental and engineering services in support of a mining permit application for an approximate 500-acre site in Ramapo, New York. Prepared various environmental impact analyses for traffic, noise, visual, ecology, archaeology, and hydrogeology.

WETLAND MITIGATION AND MITIGATION MONITORING

Mitigation Monitoring, Beekman Country Club, Town Of Beekman, NY
Currently managing project which involves the bi-monthly monitoring of a 1.85 acre wetland mitigation site. Project involves monitoring the reestablishment of hydrophic species, hydrology and the re-colonization by wildlife species. An assessment is also performed on the impact of herbivores. A monitoring report was written and submitted for the USCOE.

Wetland Mitigation Monitoring, Woodbury Premium Outlets, Woodbury, NY
Successfully conducted and managed a 5 year program designed to document the successful establishment of a wetland community in an off-site mitigation site. The project included vegetation monitoring, hydrologic monitoring, and documentation of wildlife utilization. Annual reports were submitted to the USCOE and after 5 years the bond for the monitoring was released.

Dutchess County Airport Landfill, Landfill Board Of Trustees, Town Of Wappingers Falls, NY
Remediation efforts at this site required the delineation of wetlands and ecological resources to minimize and compensate for impacts. Subsequently, wetland delineation was performed; permitting documents were prepared for submittal to the USCOE and Town, which included the preparation of approximately 2 acres of compensatory wetlands to be established after remediation was completed.

Timber Rattlesnake Assessment, Putnam Valley Planning Board, Putnam Valley, NY
As part of Town Consultant responsibilities, an assessment of historical records and existing habitat was conducted to determine if a proposed subdivision had potential for impacts to remnant timber rattlesnake populations.

GENERAL ENVIRONMENTAL SERVICES

Environmental Compliance, Us Postal Service, Six Districts
Mr. Tompkins developed an environmental compliance guidebook for postmasters in six districts of the US Postal Service, including: New York, New Jersey, Maryland, Puerto Rico, and Virgin Islands. Coordinated Hazardous Materials Inventories, US Postal Service, NY and managed the training for the implementation of the guidebook.

Town Of Wawayanda, Town Planning Board, Orange County, NY
As consultants to the Town Planning Board, all applications presented to the Planning Board were screen for wetland and ecological impacts. Either directly or by supervising staff, all wetland lines were field verified, and evaluated for permitting needs and possible mitigation. Where applicable, applicants were forwarded to NYSDEC or USCOE for permitting review. Impacts to resident wildlife was also assessed and discussed with project applicants.

Industrial Site Responsibility Act Investigation, Metal Processing Plant, NJ
Managed a New Jersey ISRA investigation involving a galvanized metal processing plant. Environmental concerns at the site included underground storage tanks, historical dumping, groundwater contamination, chemical storage, storm water management and off-site versus on-site contamination issues.

Developed and managed programs designed for conducting chemical inventories at over 360 U.S. Postal Service facilities in New York State. Assembled inventory data into a centralized database for USPS management.

Tank Management, Confidential Commercial Client, NY, NJ, MA, CT, MD, VA, TX
Instituted a tank management program for a 120-facility commercial client. Project included tank monitoring, upgrading, removal, remediation, and regulatory compliance.

Environmental Surveys, Turner Construction, Pittsburgh, PA
Managed Phase I and II environmental surveys of eight buildings scheduled for demolition in downtown Pittsburgh. Environmental concerns included asbestos, lead paint, fuel tanks biohazards, PCBs and other potentially hazardous materials.

PUBLICATIONS AND PRESENTATIONS

Tompkins, D.B. and H. Russell, Ph.D. Electronically enhanced bioremediation of chlorinated solvents using the Biolance system. New York Water Environment Association. West Point, NY, Sept. 2007.

Tompkins, D.B. Rattlesnake Populations in the Ramapo Mountains of SE New York State. New York State Chapter of the Wildlife Society. Owego, NY, Feb. 2007.

Tompkins, D.B. Rapid Bioassessment Protocols: What are they? Do they work? Should we use them? New York State Wetlands Forum Annual Conference, Liverpool, NY 2002.

Sorell, T.L. and D. B. Tompkins. A Tiered Approach to Selecting Remedial Strategies for an Urbanized Watershed with Multiple Stressors. Society of Environmental Toxicology and Chemistry, Newport, Rhode Island, April 2000.

Sorell,T.L. and D.B. Tompkins. Evaluation of Ecological Risk in an Estuarine Marsh Post Remediation: Comparison of Field-Collected and Laboratory-Based Sediment to Tissue Bioaccumulation. Society of Environmental Toxicology and Chemistry, North Atlantic Chapter, Newport, Rhode Island, April 1996.

Tompkins, D.B. Monitoring the Re-Establishment of Biotic Communities in a Disturbed Wetland. American Communities Working for Wetlands Conference, Washington D.C., May 1997.

Tompkins, D.B., J .A. Gilbert, and D. M. Lebek. Development of a Material Consolidation and Waste Elimination Plan (MCWEP) for the USPS. Mid-Atlantic Industrial and Hazardous Waste Conference. Buffalo, New York. July 1996.

Tompkins, D. B. and T.L.Sorell. Evaluation of Ecological Risk in an Estuarine Marsh Post Remediation: Evaluation of Multiple Environmental Endpoints. Society of Environmental Toxicology and Chemistry, North Atlantic Chapter, Newport, Rhode Island, April 1996.

Tompkins, D.B., and Sorell, T.L., Development of a Biota Monitoring Program to Assess Effectiveness of Sediment Remediation. Society of Environmental Toxicology and Chemistry, North Atlantic Chapter, Plymouth Massachusetts. July 1995.

Tompkins, D.B., Wetlands: Current status and trends. Sullivan County Community College, Fallsburgh, New York. October 1990.

Tompkins, D.B., and Woehr, J.R. Influence of Habitat on the Movements and Densities of Snowshoe Hares. Transactions of the Northeast Wildlife Society, Providence, Rhode Island pp. 169-175, 1979.

Experience Summary

Mr. Williams is a Supervising Geologist with 23 years of varied experience in hydrogeology and petroleum geology, hazardous site investigation and remediation, RI/FS and complex environmental site evaluation, including 16 years of project management.

Mr. Williams has supervised the investigation and remediation to closure of industrial waste disposal sites and bulk petroleum storage facilities. He has managed demolition and decommissioning projects throughout New York. He has extensive experience with the NYSDEC Hazardous Waste Remediation, Petroleum Spills and Voluntary Cleanup/Brownfields programs at diverse sites, including former manufactured gas plants, chlorinated solvent spills, chemical waste lagoons, marine terminals, and waste recycling facilities. Mr. Williams also has extensive experience with non-aqueous phase liquids, including DNAPL-impacted soils and bedrock.

Mr. Williams has experience in all phases of developing large, comprehensive environmental databases and reconstructing early industrial site conditions. He has provided scientific support for a variety of environmental litigation efforts, including the defense of the Love Canal landfill cases. Mr. Williams has provided expert testimony at trials in Federal Court.

Assignment

Site Coordinator/Pre-Design Investigation

Education

A.B., Geology, Princeton University, 1978

Registration

Professional Geologist, Pennsylvania, PG-02643-G, 1995

Professional Geologist, New Hampshire, PG-656, 2003

Experience

23 years

Relevant Expertise

- *NYSDEC Voluntary/Brownfields Cleanup Program*
- *Denolition and Decomissioning*
- *NYSDEC RI/FS and site remediation programs*
- *DNAPL / LNAPL transport & fate*
- *Remediation of petroleum spills*
- *Complex site litigation support*

Chevron Products Corporation, Port of Rensselaer Marine Terminal, Rensselaer, New York

Project Manager. Comprehensive remedial design study and IRM. Delineated LNAPL distribution and migration in tidally influenced zone throughout facility. Supervised offshore sediment assessment and contaminant transport study to evaluate potential impacts by dissolved contaminants originating in on-shore source areas. Negotiated scope of work and schedule of compliance for Stipulation Agreement between client and NYSDEC. Supervised product removal activities using HiVac™ centrifugal pump and OilMop™ lipophyllic belt systems.

Jostens Inc, Former Photo Processing Facility, Webster, New York

Project Manager. Investigation and remediation to closure under NYSDEC Voluntary Cleanup Program. Delineated nature and extent of inorganic and organic photo processing wastes associated with former wastewater lagoons and transfer lines operated by a previous owner. Developed comprehensive assessment of soil, sediment, surface water, air and groundwater (bedrock and overburden) migration pathways. Conducted FWIA and human health exposure assessments that ruled-out most exposure pathways. Remediated interior concrete surfaces and soil gas infiltration pathways. Negotiated with NYSDEC a final site remedy that consisted of development of a soil management plan and institutional controls.

Nashua Corporation, Former Scrap Yard Site, Watervliet, New York
Project Manager. Investigation and remediation to closure of a listed Class 2 site under NYSDEC Voluntary Cleanup Program. Delineated and remediated PCB contamination attributed to a former site occupant that salvaged electrical transformers and possibly aircraft hydraulic systems. Developed soil sampling and management plan to facilitate emergency sewer construction through PCB contaminated soils. Managed investigation of soil and groundwater to characterize nature and extent of PCBs, metals and VOCs. Negotiated Remedial Work Plan with NYSDEC and NYSDOH and addressed issues raised during public participation. Managed remedial design and engineering oversight of remedial construction.

NYSDEC, Apple Valley Shopping Center Site, LaGrange, New York
Project Manager. RI/FS of chlorinated solvent impacts in overburden and bedrock resulting from past releases of dry cleaning fluids. Provided assessment of data gaps in earlier investigations, developed work plan to investigate source areas and identify discrete migration pathways in bedrock. Identified contaminant pathways in bedrock aquifer by caliper and temperature logging of existing production wells, coring of monitoring wells, and packer testing of discreet transmissive features. Conducted Feasibility Study of remedial alternatives, including source-area remediation through dual-phase extraction, injection of chemical oxidants, and management of bedrock PCE plume.

Pyramid Development Corporation, Carousel Center Redevelopment, Oil City, Syracuse, New York
Operations Manager. Part of site remediation management team for one of New York's first Brownfields redevelopment projects. Responsible for coordinating 24-hour, seven days per week remediation activities involving more than 30 on-site environmental specialists. Project team provided comprehensive environmental monitoring and soil characterization services during remediation of soil and groundwater impacted by hazardous wastes and petroleum products.

NYSDEC, Gastown MGP Site, Tonawanda, New York
Project Manager. Remedial Investigation of an MGP site situated in a residential neighborhood on the Tonawanda Creek. Directed the preliminary excavation and mapping of relict gas and tar handling structures and apparatus. Defined the extent of DNAPL and impacted groundwater migrating beyond the Site in glacial/fluvial sands and gravel and creek sediment. Conducted extensive sampling and analysis (Method TO-15) of residential sub-slab soil gas to evaluate potential VOC infiltration. Conducted pilot test of innovative, proprietary pressure-pulse technology to facilitate mobilization of residual coal tar through fine alluvial sediments.

National Grid, Cohoes Linden Street MGP, Cohoes, New York
Project Manager. Remedial Investigation of a former MGP located near the confluence of the Hudson and Mohawk rivers. The investigation characterized the extent of MGP impacts in a complex bedrock environment by utilizing rock coring, packer testing and down-hole geophysical logging. The potential flux of MGP constituents to the river environment was evaluated by measurement of river discharge rates and by continuous data logging of groundwater and surface water elevations. This evaluation, together with sediment and surface water analyses, supports the assessment of potential risks to ecological resources through a Fish and Wildlife Impact Assessment. Potential vapor intrusion of site-related structures was evaluated through collection and analysis of soil gas samples.

National Grid, Rensselaer MGP, Rensselaer, New York
Project Manager. Site Characterization and IRM Evaluation of an MGP site located in a mixed use, urban setting. Field investigation conducted outside of normal business hours to avoid conflicts with current use of the site. Site conditions were evaluated through test pitting, soil borings, monitoring wells, and soil and groundwater sampling and analysis. An RI is currently being planned based on the MGP impacts identified during the SC.

National Grid, NIMO Troy - Water Street MGP Site, Troy, New York
Project Manager. Pre-Design and Hydrogeologic investigations of a 16-acre site located along the Hudson River that was used for the production of iron, coke, water gas and associated byproducts, including various distillates and asphalt products. The site was later operated as a major oil storage facility and marine terminal for the distribution of petroleum products. The investigations support a remedial design for the removal of impacted soils, NAPL recovery, in-situ chemical oxidation (ISCO), monitored natural attenuation (MNA), and institutional controls. Performed bench-scale and field pilot testing of ISCO technologies. An extensive soil boring and test pitting effort delineated subsurface structures and wastes, including LNAPLs and DNAPLs, and provided three-dimensional resolution of deep alluvial sediments targeted for ISCO. Intact soil samples were collected for bench-scale testing to determine optimal ISCO parameters for both MGP and petroleum-derived wastes. The Fenton's Reagent ISCO process was pilot tested in a portion of the site impacted with coal tar and petroleum residues, including BTEX and PAHs. Summa canister soil gas sampling with was conducted to identify the presence of VOCs with a potential to infiltrate on-site structures.

Occidental Chemical Corporation, Love Canal Defense, New York.
Project Manager, Expert Witness. Multidisciplinary support for the successful defense of punitive damages and CERCLA liability claims brought by governments in Federal Court. Coordinated the efforts of

experts in aerial photographic interpretation, photogrammetry, computer modeling of soil mechanics, hydraulics and chemical transport modeling. Developed comprehensive evaluation of more than a decade of environmental study by various government agencies. Constructed flow charts and time-lines to examine the relationship between governmental agency activity and the availability of technical information upon which administrative decisions (e.g. the Emergency Declaration) were made. Reconstructed information from significant portions of multi-million-page document production by various government agencies. Compiled evidence of third-party contribution to contaminant releases by investigating 19th and 20th century archival documentation of canal construction and development. Reconstructed early conditions of state-constructed sewer system and developed evidence enabling OCC to prove that the state's sewer accelerated migration of Love Canal wastes by a factor of 30,000. Resolved key issues of historical DNAPL distribution and waste burial in the Love Canal area. Developed GIS to facilitate graphic data evaluation and identification of spatial and temporal patterns in 500,000 record analytical database. System also integrated hydrogeologic data, sequential residential development and evolution of drainage features.

Tape Manufacturer, RCRA Corrective Action / Litigation Support, Solvent Contamination.

Project Manager, Expert Witness. Investigated 90-year-old tape manufacturing facility impacted by a massive release of toluene and heptane. Directed sampling and analysis of soil, groundwater and sewer media. Evaluated voluminous historical information concerning plant operations, waste streams and potential chemical releases. Conducted preliminary evaluation of potential relationship between sewer infiltration and water table fluctuation using contemporaneous data logging of sewer flow rates and groundwater elevations. Developed preliminary assessment of SWMUs/AOCs as part of RCRA facility assessment. Negotiated SWMU inventory based on review of historical documentation of plant design and operation. Negotiated work plan with NYSDEC to develop and pilot test an Interim Remedial Measure. Testified at trial in CERCLA cost recovery litigation against former owner. Addressed issues of solvent origins, migration and persistence in the environment and NCP consistency of client's response actions.

Memberships and Training

Sigma Xi

Hudson Mohawk Professional Geologists Association

National Water Well Association (Association of Groundwater Scientists and Engineers)

OSHA Hazardous Site Training - 40 hours

DOT Hazardous Materials Training

Publications

Shaw, G., F.J. Williams, P. Gremillion, "Stream Tracing In The Bogardus Spring System, Schoharie County, New York", GSA Abstracts with Programs Vol. 36, No. 5, November 2004

ATTACHMENT A-2

Sampling SOPs

ATTACHMENT A-2
SAMPLING SOPs

1.0 COLLECTION OF GROUNDWATER SAMPLES

The low-flow purging and sampling method will be used to collect groundwater samples.

Equipment. Various field instruments will be used during sampling. They may include but are not limited to the following:

- Electronic water level meter
- pH meter
- Turbidity meter
- Specific conductivity meter
- Oxidation Reduction Potential (ORP) meter
- Thermometer
- Dedicated purging and/or sampling pumps
- Non-dedicated purging pumps

Monitoring equipment will be protected (as much as practical) from contamination without hindering operation of the unit.

Preparatory Activities.

Preparatory Office Activities

Physical aspects of the sampling program will be organized in the office prior to embarking on a field sampling project. The time spent in the field is very valuable and should be spent on sample collection, making field measurements and recording data and not on the organization of equipment and containers.

- Sampling Sequence - The sequence of sampling will be pre-determined on the basis of existing groundwater quality data. Generally, the least contaminated wells will be sampled first, proceeding to the progressively more contaminated wells, based upon the last event's water quality data.

- Initiation of Field Data Records - Field data sheets will be initiated prior to the start of sampling. Examples of initial data to be recorded include site and sampling location identification, well depth and construction, and purging and sampling collection methods.

Preparatory Field Activities

The following procedures will be conducted in the field prior to well purging and sampling. This will be coordinated with the ongoing Hydraulic Monitoring such that a round of water levels is collected just before the groundwater sampling event commences. Measurements shall be collected on the same day so the water level data may be used to generate groundwater flow maps.

- Well Maintenance Check - A well maintenance check that includes visual observation of the condition of the protective casing and surface seal will be performed. In addition, the well will be checked for other signs of damage or unauthorized entry.

- Preparation of Well Area - A suitable work area will be established around the perimeter of the well. This will provide a clean surface on which sampling equipment can be placed such that it will not become inadvertently contaminated. This work area will be prepared by placing new polyethylene (PE) sheeting on the ground around the well, taking care not to step on it. Alternatives can include the placement of a clean PE lined trash can or a clean PE covered table adjacent to the well.

- Water Level Measurements - The depth to water will be measured prior to initiation of sampling activities. Water level measurements will also be made during purging in order to monitor well drawdown, and special care will be taken to thoroughly decontaminate the probe prior to use.

Low-Flow Purging and Sampling Method.

Introduction

The use of a low-flow purging and sampling method will minimize stress on the water-bearing zone, thereby minimizing the disturbance of any sediment that has settled at the bottom of the well. Accordingly, groundwater samples will be more representative of actual aquifer conditions.

The low-flow purging and sampling method to be applied during this monitoring program is described in detail below.

Pump Intake Location

The sampling pump intake will be installed within the well screen at the halfway point between the top of the screen and the bottom of the screen, or at a depth that is at least two feet below the static water level if the well is screened across the water table.

Water Quality Indicator Parameters

The following parameters will be measured in order to determine when well stability has been achieved prior to sampling. Their respective measurements will fall within the stated range for three consecutive readings. If the anticipated "third" reading of any individual parameter does not fall within the stated range, then the process to achieve three consecutive readings for that parameter will be restarted. If, after four hours, stability has not been achieved for the parameters listed below, the recommendations presented below will be followed.

• Water Level Drawdown	< 0.3 ft*[1]
• pH	± 0.1 unit
• Specific Conductance	± 3%
• Temperature	± 3%
• Dissolved Oxygen	± 10%
• Turbidity	± 10% for values greater than 1 NTU
• ORP/Eh	± 10 millivolts

Measurements should be taken once every 5 to 6 minutes. This interval is based upon the time it takes for purge water to replace one flow-through-cell volume (generally 250 ml) and the time it takes to measure and record the data. If the purge rate decreases or if the flow cell volume is increased, the time required for purge water replacement will increase. Water Quality Indicator Parameters will be collected in a manner that will ensure integrity of the data being collected. To ensure consistency of the data, consideration of the following will be made: 1) tubing diameter, length, and material of construction; 2) flow-through cell design, capacity, decontamination, and "purge-train" set-up; 3) pump selection and plumbing fittings; 4) calibration of flow-through cell probes; 5) purge rate; and, 6) water-level-measurement technique.

---

[1] During pump start-up, drawdown may exceed the 0.3-ft target and then recovers as flow-rate adjustments are made.

Purge Volume vs. Stabilization Time

In some cases, it may take considerable time to achieve stabilization of the Water Quality Indicator Parameters. In other cases, they may never stabilize. However, as provided in USEPA guidance, the following options are available if stability has not been achieved after four hours of purging: 1) continue purging until stabilization occurs, no matter how long it takes; 2) discontinue purging, do not collect a sample and document the attempts to reach stabilization; or 3) discontinue purging, collect a sample and document the attempts to reach stabilization. In situations where the Water Quality Indicator Parameters do not stabilize, the sampler will document that low-flow purging and sampling could not be performed and document how the samples were collected.

If a Water Quality Indicator Parameter is not accurately measured during the monitoring process or if a certain Water Quality Indicator Parameter does not stabilize, and that particular Water Quality Indicator Parameter is not significant with respect to the type of contaminant of concern, sample collection will still proceed. Any Water Quality Indicator Parameters that are affected by field conditions or instrument malfunction will be discussed in the text of the report in order to alert the end-user of potential data bias.

Tubing

The inside diameter (ID) of tubing will be no greater than three-eighths of an inch (3/8-in). Larger tubing diameters will reduce flow velocity resulting in a corresponding increase of pump speeds to maintain flow. Increased pump speed may, in turn, elevate the potential for turbulent flow across the screened interval and this may affect the quality of the water being sampled. Conversely, any reduction in flow velocity may allow air to become trapped in the tubing, which may ultimately affect air-sensitive parameters or allow particulates to settle, which may affect turbidity values. The length of tubing, from the top of the well casing to the flow-through chamber, will be the shortest length manageable. Attention to this detail will help ensure that: 1) exposure to ambient temperature, direct sunlight, and bubble formation are kept to a minimum, and 2) deposited solids or air bubbles will less likely be trapped in tubing bends and re-mobilized after accidental movement. Occurrence of any one or combination of these factors can cause variations in Water Quality Indicator Parameter measurements, which could increase stabilization time. Therefore, tubing will be completely full of water at all times.

The tubing's material of construction will be either Teflon® or Teflon®-lined polyethylene up to the flow-through cell. Tubing downstream of the flow cell may be constructed of a lower-quality, more flexible material. Tubing "reuse" will not be permitted.

Flow-Through Cell

Cells are required to be transparent in order to "see" the physical condition of the purge water or air bubbles passing through the system. The cell will be sealed against unwanted exposure to the atmosphere, thus ensuring accurate measurement of air-sensitive parameters (dissolved oxygen, pH, etc.). The total capacity of the cell will be small (300-1,000 ml) in order to maintain a desirable turnover rate of water coming into the cell to ensure real-time data integrity. The in-line design will allow for purge water to enter the flow cell from a bottom port and exit at the top. The discharge may be fitted with a check valve.

The pump discharge line will not be connected to the flow-through cell upon initial pump startup. This will allow the sampler time to monitor drawdown, stabilize the flow rate and prevent fouling of probes by bacteria, sediment, or NAPL. Once drawdown measurements indicate that the flow rate has been controlled and a few minutes (<10) have been allowed to clear any unwanted material, the pump discharge line can then be connected to the flow cell.

The cell and probes will be rinsed with distilled/deionized water between each monitor well as accumulation of suspended material may impact probe performance. The probes will then be rinsed using a mild detergent or laboratory glassware cleaning solution, and then rinsed again with distilled/deionized water. Because the location of the flow cell or cells in relation to the sample port is critical, samples for turbidity measurement, general chemistry and laboratory analysis will be collected ahead of the flow cell. If two cells are used in series, the dissolved oxygen probe will be located in the first cell.

The flow-through cells will be located as close as possible to the well head in order to minimize the length of tubing needed between the well head and flow-through cell. The flow-through cell will be protected from ambient conditions and the ground surface.

Pump Selection

Pumps used for monitoring Water Quality Indicator Parameters will be submersible, positive-displacement pumps, and may include bladder, variable-speed submersible-centrifugal, reciprocating-piston, progressive-cavity, or gear pumps. Peristaltic pumps will not be used. The pump discharge will be fitted appropriately to receive either 1/4 or 3/8-inch inside-diameter (ID) Teflon® or Teflon®-lined polyethylene tubing.

Pumps constructed with impellers, helicoils, or gears, which are difficult to clean or are constructed of unacceptable plastic parts, will not be used for sampling. In addition, the power or gas supply line for the pump will be isolated from the sample tubing.

Plumbing Fittings

A check valve will be incorporated into the tubing train, within the pumps, or within the flow cell discharge to eliminate accidental drainage and subsequent aeration of the flow cell. More importantly, a check valve will prevent a back-surge of purged water being reintroduced at the screen interval of the well should the power source or pump experience mechanical failure. A ¼- or 3/8-inch ID barbed "T" or "Y" fitting, placed ahead of the flow cell, may be used to establish the line which will receive a needle valve for turbidity, general chemistry and analytical sample collection. The "T" or "Y" fitting used will be constructed of Teflon® or stainless steel and decontaminated between each use. The fitting may be constructed of polyethylene and decontaminated between each use if it is only used to sample for turbidity and general chemistry parameters. If analytical samples are collected through the "T" or "Y" fitting and needle valve, then those parts will be incorporated into the field blank collection technique. When collecting a sample at the port ahead of the flow cell, a flow control valve (stainless-steel needle valve [preferred] or stainless steel/Teflon® ball valve [optional]) will be used to prevent back pressure and air bubbles from forming in the tubing

The "needle valve" offers versatility as it can be used for collection of turbidity, general chemistry and analytical samples. It can be used with Teflon® tubing and can be used to control sample flow rate because the design significantly reduces any back pressure gradient. Like all other sampling equipment, the "needle valve" will be decontaminated before use at any well.

Calibration of Probes

Calibration of the probes used to monitor water quality indicator parameters will take place in the field prior to the day's events. All manufacturers' instructions for proper care and calibration of the probes will be followed. Solutions for probe calibration will be held to the temperature of the liquid (groundwater) being measured as temperature correlation is critical in calculating conductivity, dissolved oxygen and pH. As an alternative, tables and equations to compensate for the difference between ambient groundwater and calibration solution temperature may be used if provided in the operating manuals or with the calibration solutions. No sampling will commence until all instruments are calibrated and operating properly. The calibrations steps utilized will be recorded.

Water Level Measurements

The depth to the top of the water column will be recorded prior to pump installation and/or prior to purging. If the total depth of the well needs to be determined (e.g., to verify the correct well designation and/or to determine if silt has accumulated in the bottom of a well), then it will be measured at least 48 hours prior to sample collection or after the sample has been collected and the pump removed. Total depth measurements must never be taken immediately before purging as this may cause the re-suspension of solids in the well and prolong the purge time. Once the initial water-level measurement has been recorded and the pump installed, the water-level probe will be suspended in the well at the point at which drawdown is equivalent to a 0.3-foot drop. The water levels will be recorded simultaneously with water quality instrument parameter measurements once every five minutes. Water-level-measurement devices, which may impart some disturbance to the water column (i.e., stainless steel "popper" or coated tape) will not be used.

Pump Installation

Once pumps have been properly decontaminated and fitted with appropriate tubing, installation of the pump can begin. Pumps will be installed in such a manner as to ensure that any disturbance in the well is kept to an absolute minimum. Once a pump reaches the top of the water column, its descent will proceed very slowly through the water column. The pump will be lowered until the pump's intake reaches the halfway depth between the top and bottom of the screen, or installed at least two feet below the static water level if the well screen intercepts the water table. The actual level where the pump intake will be suspended will be predetermined based upon well construction logs or prior analytical data. Under no circumstance will the pump make contact with, or be "bounced" off, the bottom of the well.

Purge Rates

The purge rate will range between 100 to 500 ml/min. The water will be initially purged prior connecting the tubing to the flow-through cell in order to prevent any fouling of the cell. Tubing will then be connected to the cell with the pump running. After making the connection, the cell will be inspected to verify that purge water has filled cell and that all air is purged from system. The pump speed will remain constant such that flow rates never exceed 500 ml/min and, once stabilized, the flow rate will not be varied. If drawdown exceeds 0.3 ft., then the pump speed will be reduced until the drawdown has stabilized; however, the pump speed will not be reduced to lower than 100 ml/min. If drawdown does not come under control at 100 ml/min, then a field decision will be rendered as to how far to allow drawdown to continue until sample collection. At no time will evacuation allow any portion of the well screen to be exposed (for wells screened below the water

table) or bring the well to dryness. Well stabilization indicators parameters will be measured once the water level has stabilized.

Purge rates will be monitored by measuring the flow from the discharge side of the flow cell with a graduated cylinder. All of the required water quality indicator parameters will be recorded on appropriate filed data sheets once every 5 to 6 minutes. Once stability has been attained and recorded, sampling will begin.

Sampling

Once the water quality indicator parameters have stabilized, or once a four-hour (4-hr) time decision has been rendered, sampling can proceed. The same pumping rate used during well purging will be maintained during sample collection. The sample will be collected directly from the flow control valve at the sample port. A final set of water quality indicator parameter measurements will be recorded immediately after sample collection.

In the event that wells do not stabilize within a four-hour (4-hr) time frame, purging may be considered to be complete in these wells after three to five (3 – 5) well volumes of water have been purged. Accordingly, purging will be considered to be complete in wells in which parameters do not stabilize after three to five (3 – 5) well volumes have been purged and/or after purging for four (4) hours, whichever is a shorter time period.

Ultra-Clean Sample Collection and Handling. "Ultra-clean" sample collection and handling methods will be used for the collection of mercury samples from groundwater. The ultra-clean approach provides an additional level of quality assurance in the field to minimize false positive results. The ultra-clean sample collection and handling methodology, as presented below, are consistent with USEPA Method 1669 "Sampling Ambient Water for Trace Metals at EPA Water Quality Criteria Levels" (USEPA, 1996).

Ultra-Clean Sample Handling

The sampling handling will be performed according to the following steps:

- The sampling team (minimum of 2 people) will be organized into two parties designated as "Clean-Hands" and "Dirty-Hands". The establishment of these roles is intended to minimize potential interference such that the detection of constituents in groundwater

samples is a reflection of actual groundwater conditions at the Site and is not biased because of cross-contamination.

- Upon arrival at the sampling location, the team will have already completed the required office preparation activities (see preparation activities section above). Both team members will don clean gloves.

- A work area will be prepared around the monitoring well area by establishing a perimeter around the well. Inadvertent cross-contamination of the sampling equipment will be minimized by placing fresh polyethylene (PE) sheeting on the ground around the monitoring well; the sampling team must not step on the PE sheeting. Alternatives can include the placement of a clean PE lined trash can or a clean PE covered table adjacent to the well. This activity should be performed by the Dirty-Hands team member since there will be potential contact with the surrounding environment.

- Dirty-hands will change gloves. A static water level will be taken by Dirty-Hands and recorded on the field-data sheets by Clean-Hands.

- The pump will be removed from the storage container by Dirty-Hands.

- The tubing to be used will be connected to the pump by Clean-Hands while NOT touching the pump.

- Clean-Hands will then lower the pump slowly through the well to the sample-depth and connect the tubing to the water quality instruments while again NOT touching the instruments. Both will change gloves.

- Dirty-Hands will secure the pump and operate all equipment for purging (water-level meter, pump control box, etc.). Clean-Hands will record the information from the display of the water quality instruments and the water-level and flow-rate given by Dirty-Hands.

- When it is time to sample both will change gloves. Dirty-Hands will remove the sample containers from the cooler (sample containers will have already been placed inside of an inner and outer zipped bag as part of the office preparation activities).

- If filtering the sample, Clean-Hands will attach the inline filter to the sample tubing. Dirty-Hands will open the outer bag and Clean-Hands will open the inner bag and remove the sample container.

- Once filled, Clean-Hands will secure the container lid and return it to the inner bag and zip it shut. Dirty-Hands will then shut the outer bag and place it in the cooler.

- Sampling is now complete and Dirty-Hands will remove all sampling equipment from the well, secure all purge-water and clean the perimeter in preparation of moving to the next location. Clean-Hands will complete all paperwork.

Ultra-Clean Preparatory Office Activities

Physical aspects of the sampling program will be organized in the office prior to embarking on a field sampling project. The time spent in the field is very valuable and should be spent on sample collection, making field measurements and recording data and not on the organization of equipment and containers.

- Sampling Sequence - The sequence of sampling will be pre-determined on the basis of existing groundwater quality data. Generally, the least contaminated wells will be sampled first, proceeding to the progressively more contaminated wells, based upon the last event's water quality data.

- Initiation of Field Data Records - Field data sheets will be initiated prior to the start of sampling. Examples of initial data to be recorded include site and sampling location identification, well depth and construction, and purging and sampling collection methods.

- Sampling Equipment Preparations – All sampling equipment to be used when sampling for mercury will be cleaned initially and placed into two clean, disposable storage bags for transportation to the Site.

- Analytical Sampling Container Preparation – When sampling for mercury all containers used will be placed into two clean zipped, plastic bags and transported to the Site inside

coolers with ice. This step initiates the Clean-Hands / Dirty-Hands procedures for sampling for mercury.

Ultra-Clean Decontamination

The cleaning process will consist of the following:

- Change gloves. Disassemble pump, wash parts (except used bladder and O-rings) in laboratory detergent and potable water solution.
- Rinse the pump and parts with potable water.
- Change gloves. Rinse the pump with distilled/deionized water.
- Rinse the pump and parts with 10% nitric acid (if sampling for metals).
- Change gloves. Rinse the pump with distilled/deionized water.
- Rinse the pump and parts with reagent-grade methanol.
- Allow the pump and parts to air dry fully.
- Change gloves. Rinse the pump with distilled/deionized water.
- Assemble the pump with a new bladder and new O-rings and place into two clean, disposable storage bags.

Non-dedicated bladder pumps will be disassembled and the pump and its parts will be cleaned prior to and between each use. The bladder, O-rings and pump tubing will be replaced after each use. Pump tubing will be discarded after each use unless saved and reused for the same monitoring well (dedicated to sampling location).

2.0 SOIL VAPOR SAMPLE COLLECTION

Soil vapor (SV) samples will be collected from material above the water table at locations throughout the Site following the procedure outlined below:

Installation of Soil Vapor Probes

Soil vapor probes will be installed from which soil vapor samples will be collected. The soil vapor probes will installed as follows:

- A direct-push drill rig (e.g., GeoProbe®) will be used to advance a 2-inch soil -core sampler 5 feet into the subsurface immediately adjacent to selected proposed soil vapor probe

location to observe the depth to the water table near the soil vapor sampling locations. This information will be used to select the depth to which the sample screens will be set at the surrounding sample points.

- Once the local depth to the water table is determined a 2-inch diameter borehole will be advanced using the direct-push rig to just above the water table.

- Once the borehole is complete a 1-inch diameter PVC slotted screen 0.010" will be set in the borehole with clean silica sand filter pack material placed in the annulus surrounding the screen. The length of screen used at the sample locations will depend on the depth of the water table, but is generally assumed to be between 3 and 5 feet across the Site.

- A hydrated bentonite slurry will be placed in the annular space above the filter pack to provide a seal in the borehole from surface contamination and to minimize infiltration of ambient air.

- The top of the soil vapor probe will be completed with a male-threaded, appropriately sized tubing-barb to be used with the sampling tubing. No organic thread lubricant of any kind will be used when constructing this to minimize the chance of sample contamination. The barb will be completed with a cap so that infiltration by outside air will be minimized.

- Upon completion of soil vapor sampling, described below in Section 3.11.2, the soil vapor probes will be abandoned by pulling the temporary well screen out of the ground and backfilling the borehole with a hydrated bentonite slurry.

Collection of Soil Vapor Samples

Soil vapor samples will be collected no less than two weeks following the installation of the soil vapor probes. Samples will not be collected on days in which high humidity or rainfall may impact the readings from the field monitoring equipment.

- One (1) Teflon®-lined polyethylene sampling tube will be connected to the tubing-barb for use in sampling. The tube will be secured to not allow debris to clog the tube and/or potentially contaminate the sample. Prior to collecting the sub-slab soil gas sample, a "leak-test" will be performed to ensure tightness of the seal. A 3-gallon modified plastic

bucket will be placed over the top of the sample point. The soil vapor sampling tube will be threaded through a gas-tight fitting in the bucket to allow for sample collection without removing the bucket. The base of the bucket will be suitably sealed to the ground or floor surface (e.g. using bentonite clay). The bucket will have tubing at the top of the chamber to introduce the tracer gas (helium) into the chamber and a valved fitting at the bottom to let the ambient air out while introducing tracer gas. A helium detector will be attached to the valve fitting at the bottom of the chamber to verify the presence of the tracer gas. The valve will be closed after the chamber has been enriched with helium at concentrations >50%. After the test set-up, the sample point will be purged of three volumes (inner volume of sample point and sample tubing) of soil gas. Purging will be conducted using an air pump adjusted to a low rate of 200 ml/min or less. During purging, the helium concentration will be monitored at the vent of the air pump. A helium reading of greater than 5% of the concentration within the bucket surrounding the sample point is indicative of a leak in the seal. If the readings indicate a poor seal, the sample point will be reset and the leak detection process repeated until it is found to be free of leaks.

- Prior to Sampling, the sampling probe will be purged for approximately 10 minutes. This is intended to exchange air from the sampling tubing, which could potentially dilute or otherwise bias the sample.

- To collect a sample for laboratory analysis for total mercury by modified IO-5, after purging, the tubing will be attached to sorbent tubes with a Teflon particulate filter in line before the trap so that no particulate can be trapped and skew results. When assembling, installing and removing the traps particle-free gloves will be worn at all times and samplers will stand down-wind to prevent contamination by shedding particles from clothing, etc.

- The trap with filter will be connected to a pump which will draw air through the trap at a constant rate of 0.3 L/min. The calibrated range of the method is 5 ng to approximately 7.5 ng depending on the variety of trap used in sampling. See Worksheet #15 for additional information.

- The samples will be sent to a specialized mercury laboratory for analysis.

3.0 SURFACE WATER AND SEDIMENT SAMPLING

When sampling for both surface water and sediment at the same location, the surface water sample will be taken first with care not to disturb bottom sediments. When possible, surface water grab samples will be collected in the actual container to be used to transport the sample to the laboratory. Therefore, pre-preserved containers are not to be used as collection vessels. Required preservatives will be added after the samples are collected. Surface water samples will be collected at mid-depth of the water column. A horizontal sample collector, such as a pond sampler, may be used to access a surface water sampling location otherwise inaccessible. Surface water and sediment samples will be collected in a "downstream" to "upstream" direction to minimize the chance of spreading disturbed sediment to unsampled locations

Surface Water

The following procedure will be used to collect surface water directly in sample containers provided by the project laboratory:

1) Don a clean pair of latex gloves.

2) Estimate sampling depth by visual observation (for shallow samples) or measure depth using a weighted, flexible measuring tape or a rigid gage.

3) Invert the laboratory-supplied sample container (without preservatives), insert the sample container into the water to the desired level, and then turn the mouth of the sample container up and towards the upstream direction thus allowing the container to fill.

4) Cap sample container while container is still underwater, if possible.

5) Remove sample container from water body and cap if not already capped.

6) Rinse the exterior of the sample container thoroughly with deionized water and label container.

7) Add preservatives and check for appropriate pH.

8) Record all appropriate data (including sampling location, sampling depth, time of sampling, and description of sample) in field logbook.

Sediment

The procedures for collecting surface and subsurface sediment samples for analytical and physical parameters are provided below. Based on stream characteristics and logistics, a hand corer (or equivalent device) is selected as the default sampling method for sampling sediment because this method can be used to collect a relatively undisturbed sample that shows a profile of stratification. The procedure to collect a sample using a hand corer is described below.

1) Record the sample location on a site map and in the field logbook.

2) Decontaminate stainless steel sampling equipment.

3) Don a clean pair of latex gloves.

4) Push core tube into the surface of sediment.

5) Measure length of core tube above surface of water

6) Manually push or hammer the core tube into the sediment to the target depth.

7) Fill core tube with water (to remove air above sediment-water interface) and cap top of core tube.

8) Pull core tube out of sediment, as bottom tube breaks water surface, cap bottom of core.

9) Measure the sediment in the core tube to determine depth of penetration and recovery.

10) Transfer (using a decontaminated spoon) each selected depth interval of sediment into separate stainless steel bowls.

11) Decontaminate stainless steel sampling equipment.

Repeat the steps for pushing and retrieving the core tube to obtain a sufficient quantity of sediment for all chemical and physical analyses. Sediment samples may also be collected using decontaminated stainless steel sampling scoops, trowels, or petit ponar samplers. The following steps will be performed once the sample is collected:

- Label the sampling jars.
- Homogenize sediment from each depth interval and transfer the sediment into appropriate sample containers using the decontaminated spoon.
- Store and document sample.
- Mark sampling location with a buoy, stake, or other indicator for subsequent surveying of sample locations.
- Sampling equipment shall be decontaminated after the collection of each sample.
- Record all appropriate data (including sampling location, sampling depth, time of sampling, and description of sample) in field logbook.

KLEINFELDER
Bright People. Right Solutions.

5/26/2010

STANDARD OPERATING PROCEDURE

Fish Sampling

Introduction

As part of work plan preparation, the fish sampling locations will be selected based on morphology of the water body, environmental conditions and adjacent land use and accessibility. Prior to sampling, a determination of the final field sampling method for the collection of fish will be made. Anticipated methods may include netting, seining, minnow traps, electroshocking, or other method as determined by field staff and approved by the oversight agency. Electroshock techniques are anticipated to provide the best results for streams and channels. Electroshock collection techniques are best for shallow water with low turbidity, while seining may be more appropriate in water bodies with higher turbidity. Boat access to sampling locations may be performed with the proper safety and equipment measures. Electroshocking can be performed using either a backpack-mounted unit or a shore-based unit, or from a boat. Electro shocking can be less effective in deeper water.

Sampling Rationale/Approach

Sample selection should adequately represent the conditions and morphology of the water bodies Sampling should occur in late summer to early fall when lipid content is generally highest. Sampling should not occur from one month before spawning through one month after spawning; this is because the samples may not be representative (due to changed behaviors associated with this life-cycle stage). Composite skin-on samples are most cost-effective and best representative of the average contaminant level.

For fish, timing of sampling is important. Periods of low to moderate stream flow (typically late summer) are best for sampling fish. Sampling at this time also minimizes disturbance to the nests of fish as most young are mobile and are free swimmers. Optimal sampling period will, of course, vary regionally and should be set based on knowledge of the regional biota, precipitation patterns, and other relevant factors.

Prior to sampling, sstandard water quality measurements will be made at each sampling location. A habitat evaluation sheet, which identifies physical and biological features of each habitat, will also be completed for each location. These data sheets record the field variables, documenting habitat features for later comparison of species composition, abundance, and general health. This type of standardization is especially important for a multi-year monitoring program.

Electroshock may not be appropriate if turbidity is high, making the location of stunned fish difficult. Seines are inexpensive, safe, and suitable for depths less than ten meters. A boat may be required to access sample locations at the center of the I-90 pond. Purse seines may be used in open water and they generally do not touch bottom. Seines also ensure the collection of live, intact specimens.

If a current is present, sampling should be conducted from the downstream location to avoid contamination of upstream locations. Sampling should be done out of the water body near the sampling location to decrease disturbance.

Fish samples should be of same species, within any legal requirements for harvestable size or weight, and be of similar size so that smallest individual in the composite is no less than 75 percent of the total length of the largest individual (size determined by length from the anterior-most part of the fish to the tip of the longest caudal fin ray). If mixed species samples are allowable, this determination must be made prior to initiating field sample collection. For composite samples (smaller fish), samples should preferably be collected at the same time, and no more than one week apart. Each composite sample should contain approximately the same number of individuals of the same size and weight range, and contain sufficient material for the analysis of all recommended target analytes. It is anticipated that 3-10 individuals will be collected for a composite sample.

All field staff must wear gloves when handling both fish and traps as scents and oils may be transferred to the trap and cause avoidance. Change gloves between seining, handling the fish samples, and handling unclean sampling equipment. Equipment will be decontaminated between uses.

The following will be recorded in the field book:

- Species (identified using standard field references to the lowest practical taxonomic level)
- Size
- Approximate weight
- Sex (if ascertainable)
- External gross morphological conditions such as skin ulcers, neoplasms (tumors), and fin erosion

Individuals will be inspected to ensure that skin and fins have not been damaged by the sampling equipment; damaged or dead specimens will be discarded. Whole bodies of specimen fish will be included in the samples submitted for laboratory analysis.

Each fish will be individually wrapped in extra heavy duty aluminum foil. The sample ID label will be taped to the outside of each aluminum foil package, and each individual fish will be placed into a waterproof plastic bag and sealed, with the custody label attached to the outside of the plastic bag with string or tape. All the packaged individual specimens in a composite sample will be kept together in one large waterproof plastic bag in the same shipping container for transport. Once packaged, samples will be cooled on ice immediately and delivered to the laboratory within 24 hours of collection.

Equipment/Materials

- Boat supplies (life preservers, first aid kit, spare parts and oars, electric motor or gas powered motor and fuel)
- Collection equipment (nets, traps, electroshocking device, dip nets, buckets)
- Sample materials (holding trays, fish measuring board, taxonomic keys, calipers, shucking knife, balance for estimating weight, sample containers/packaging materials)
- Record Keeping/documentation supplies (camera, sample/specimen labels, chain-of-custody, field book)
- Sample preservation and shipping materials (ice, cooler, filament-reinforced tape to reinforce coolers for transport to laboratory)
- Work Plan
- Health and Safety Plan, Job Safety Analysis (JSA)
- A NYSDEC collection license(required for this program)

Health and Safety Measures

- Three-person sampling team, to assist with electroshocking and shore assistance if a boat is used.
- Minimize or eliminate sampling during non-daylight hours, under severe weather conditions, or during periods of high water. No work occurs during electrical storms.
- Personal Flotation Devices (PFDs) should be worn in boats or along the shore where appropriate
- When handling instruments or containers that come in contact with the potentially impacted water, wear nitrile gloves and safety glasses.
- Wear long sleeves and pants
- Minimize splash hazards
- If utilizing waders or hip boots, do not remove from site once used in the affected media. Also use safety lines to minimize falling in, especially in mucky soils.
- Do not enter the boat with boots on.

Reference

USEPA, 1989. *Rapid Bioassessment Protocols for use in Streams and Rivers: Benthic Macroinvertebrates and Fish*. EPA 444/4-89-001.

USEPA, 1997, *Superfund Program Representative Sampling Guidance Volume 3: Biological* Interim Final, OSWER Directive 9285.7-25A, Environmental Response Team, Office of Emergency and Remedial Response, Office of Solid Waste and Emergency Response, Washington, DC.

USEPA, 2000, *Guidance for Assessing Chemical Contaminant Data for Use in Fish Advisories Volume 1: Fish Sampling and Analysis* 3rd Edition, EPA 823-B-00-007, Office of Science and Technology, Office of Water, Washington, DC

DRAFT

ATTACHMENT A-3

Field Forms

Field Audit Checklist

Sampling Project:

_____

Date of Sampling:

_____

_____ All relevant information recorded in bound logbooks and/or on pre-printed data sheets

_____ Sampling personnel are in possession of relevant, current SOPs

_____ SOPs are followed and/or deviations are noted in logbooks with appropriate flags for the samples involved

_____ All samplers are trained or supervised by trained personnel

_____ QA oversight is provided during sampling activities

_____ Custody seals are present and intact at time of delivery of new sample containers to the field

_____ Sample containers are appropriate for the intended analyses and certified clean, either by laboratory or manufacturer

_____ Sample containers have preservatives, as appropriate, for the intended analyses

_____ The samples are collected from the proper locations

_____ All required field QC samples are collected

_____ Standards for field analyses, if applicable, are appropriate for the intended use and are not expired

_____ Field calibrations were successfully performed within QC limits

_____ Field calibration and calibration verification data, where relevant, are recorded in logbook

_____ Samples are stored at 4 degrees C or as specified in the QAPP

_____ Custody seals are placed on sample coolers prior to sample shipment

_____ All chain-of-custody documentation is complete and included with~~in~~ sample delivery

_____ Samples are delivered to the laboratory within prescribed holding times

Printed name of auditor:

_____

Signature of auditor:

_____

Title of auditor:

_____

Address and phone number of auditor:

_____

Date of audit:

_____

_____

BROWN AND CALDWELL

SITE/PROJECT H&S EVALUATION CHECKLIST

"Privileged and Confidential"

Project Name _____ *Project No.* _____

Project Activities _____

* Identified Issue Corrected	YES	NO	N/A	C*
Documentation				
Written Safety Plan (HSP or FWSP) is on site	☐	☐	☐	☐
Addenda to the Safety Plan are documented on site	☐	☐	☐	☐
Information in the Safety Plan matches conditions and activities at the site	☐	☐	☐	☐
Safety Plan has been read and signed by all site personnel, including visitors	☐	☐	☐	☐
Hospital route map and emergency contact information readily available or posted	☐	☐	☐	☐
Evacuation Plan/Route in place (especially important in plants/fixed facilities)	☐	☐	☐	☐
Tailgate safety meetings have been held and documented	☐	☐	☐	☐
Site personnel have appropriate training and medical clearance	☐	☐	☐	☐
Air monitoring is performed and documented as described in the Safety Plan	☐	☐	☐	☐
Air monitoring equipment has been calibrated daily (and documented)	☐	☐	☐	☐
MSDSs for chemical products on-site are present and readily available	☐	☐	☐	☐
General				
Good housekeeping procedures in-place	☐	☐	☐	☐
Site zones are set up and observed (where appropriate)	☐	☐	☐	☐
Access to the work area limited to authorized personnel	☐	☐	☐	☐
Traffic control measures have been implemented	☐	☐	☐	☐
Decontamination procedures are followed and match the requirements of the Safety Plan	☐	☐	☐	☐
Decontamination stations (including hand/face wash) are set up and used	☐	☐	☐	☐
Emergency and first aid equipment is on site as described in the Safety Plan	☐	☐	☐	☐
First aid kit is adequately stocked and immediately accessible	☐	☐	☐	☐
Emergency eyewash station is operational and immediately accessible	☐	☐	☐	☐
Drinking water or hydrating fluids are readily available	☐	☐	☐	☐
Accessible phone is readily available for emergency use	☐	☐	☐	☐
Proper drum and/or material handling techniques are used	☐	☐	☐	☐
Drums and waste containers are labeled appropriately	☐	☐	☐	☐
Tools and equipment are in good working order and are being used properly	☐	☐	☐	☐
Ladders are inspected and properly used	☐	☐	☐	☐
Fire extinguishers are operational and immediately accessible	☐	☐	☐	☐
PPE				
Personal protective equipment (PPE) used matches Safety Plan requirements	☐	☐	☐	☐

NOTE: The purpose of this evaluation was to generally assess the overall effectiveness and application of BC's safety and health program as it relates to BC's personnel working on-site. Although this evaluation may make observations of client or contractor/subcontractor related safety and health issues, this document should in no way be interpreted as a inspection, assessment, or evaluation of a client, contractor, or subcontractor's safety and health program.

Send completed checklists as "Privileged and Confidential" to Corporate General Counsel.

	YES	NO	N/A	C*
Hard hats, steel toe boots and safety glasses worn	☐	☐	☐	☐
PPE inspected for wear and tear prior to use	☐	☐	☐	☐
Hearing protection used where appropriate	☐	☐	☐	☐
High-visibility traffic safety vests worn in traffic areas	☐	☐	☐	☐
Chemical (nitrile or other specified) or biological resistant (latex) gloves worn	☐	☐	☐	☐
Respirators are properly used, cleaned and stored	☐	☐	☐	☐
Other necessary PPE available and used (specify:_____)	☐	☐	☐	☐
Sub-Surface Activities (Drilling/Excavation/Trenching)				
Local underground service alert has been notified per local requirements	☐	☐	☐	☐
Utility locator has cleared subject locations	☐	☐	☐	☐
Overhead utilities do not present a hazard to field equipment/personnel	☐	☐	☐	☐
Protective systems in place prior to employee entry into excavations/trenches	☐	☐	☐	☐
Air monitoring conducted if there is potential for a hazardous atmosphere in excavations greater than 4 feet deep	☐	☐	☐	☐
Safe means of egress in trenches so no more than 25 feet of lateral travel is required	☐	☐	☐	☐
Competent person on-site and inspects trenches/excavations daily	☐	☐	☐	☐
Spoils are placed no closer than 2 feet from the edge of an excavation	☐	☐	☐	☐
Confined Spaces				
Confined spaces are evaluated for hazards and determined to be non-permit prior to entry (potential for hazardous atmosphere, engulfment/entrapment, other hazards)	☐	☐	☐	☐
Air monitoring conducted to evaluate atmospheric conditions	☐	☐	☐	☐
If determined to be a permit-space, permit-required confined space procedures in place	☐	☐	☐	☐
If determined to be a permit-space, permit issued and permit conditions met	☐	☐	☐	☐
If determined to be a permit-space, staff have received appropriate training	☐	☐	☐	☐
Electrical				
Extension cords are grounded and protected from water and vehicle traffic	☐	☐	☐	☐
Lockout/tagout procedures used	☐	☐	☐	☐
Ground-fault circuit interrupts (GFCIs) are used	☐	☐	☐	☐
BC employees remain outside the Arc Flash Protection Boundary	☐	☐	☐	☐

Notes *(All "no" answers must be addressed and corrected immediately. Note additional health and safety observations here. Use the back page if necessary.)*

_____

_____

Conducted By: _____ *Signature:* _____ *Date:* _____

NOTE: The purpose of this evaluation was to generally assess the overall effectiveness and application of BC's safety and health program as it relates to BC's personnel working on-site. Although this evaluation may make observations of client or contractor/subcontractor related safety and health issues, this document should in no way be interpreted as a inspection, assessment, or evaluation of a client, contractor, or subcontractor's safety and health program.

Send completed checklists as "Privileged and Confidential" to Corporate General Counsel.

Project Manager: _____ *Site Safety Officer:* _____

Brown and Caldwell Personnel Present

	Training		Medical	
	YES	NO	YES	NO
Name _____	☐	☐	☐	☐
Name _____	☐	☐	☐	☐
Name _____	☐	☐	☐	☐
Name _____	☐	☐	☐	☐
Name _____	☐	☐	☐	☐
Name _____	☐	☐	☐	☐
Name _____	☐	☐	☐	☐
Name _____	☐	☐	☐	☐
Name _____	☐	☐	☐	☐
Name _____	☐	☐	☐	☐
Name _____	☐	☐	☐	☐
Name _____	☐	☐	☐	☐

Additional Notes:

_____

_____

_____

_____

_____

_____

NOTE: The purpose of this evaluation was to generally assess the overall effectiveness and application of BC's safety and health program as it relates to BC's personnel working on-site. Although this evaluation may make observations of client or contractor/subcontractor related safety and health issues, this document should in no way be interpreted as a inspection, assessment, or evaluation of a client, contractor, or subcontractor's safety and health program.

Send completed checklists as "Privileged and Confidential" to Corporate General Counsel.

BROWN AND CALDWELL

Allendale, NJ Office

LOW-FLOW GROUNDWATER SAMPLING FIELD DATA

Well Number:
Sample I.D.: (if different from well no.)

Project:
Personnel:

Date: _____ Time: _____
Weather: _____ Air Temp.: _____

WELL DATA:

Casing Diameter: _____ ❑ Stainless Steel ❑ Steel ❑ PVC ❑ Teflon® ❑ Other: _____
Intake Diameter: _____ ❑ Stainless Steel ❑ Galv. Steel ❑ PVC ❑ Teflon® ❑ Open rock
DEPTH TO : Static Water Level: _____ ft Bottom of Well: _____ ft
DATUM: ❑ Top of Protective Casing ❑ Top of Well Casing ❑ Other:
CONDITION: Is Well clearly labeled? ❑ Yes ❑ No Is well clean to bottom? ❑ Yes ❑ No
Is Prot. Casing/Surface Mount in Good Cond.? (not bent or corroded) ❑ Yes ❑ No
Does Weep Hole adequately drain well head? ❑ Yes ❑ No
Is Concrete Pad Intact? (not cracked or frost heaved) ❑ Yes ❑ No
Is Padlock Functional? ❑ Yes ❑ No ❑ NA Is Inner Casing Intact? ❑ Yes ❑ No
Is Inner Casing Properly Capped and Vented? ❑ Yes ❑ No
VOLUME OF WATER: Standing in well: _____ To be purged: _____

PURGE DATA:

METHOD: ❑ Bailer, Size: ____ ❑ Bladder Pump ❑ 2" Submersible Pump ❑ 4" Submersible Pump
❑ Centrifugal Pump ❑ Peristaltic Pump ❑ Inertial Lift Pump ❑ Other: _____

MATERIALS: Pump/Bailer: ❑ Teflon® ❑ Stainless Steel ❑ PVC ❑ Other: _____
Tubing/Rope: ❑ Teflon® ❑ Polyethylene ❑ Polypropylene ❑ Other: _____

Pumping Rate: _____ Elapsed Time: _____ Volume Pumped: _____
Was well Evacuated? ❑ Yes ❑ No Number of Well Volumes Removed: _____
PURGING EQUIPMENT: ❑ Dedicated ❑ Prepared Off-Site ❑ Field Cleaned

SAMPLING DATA:

METHOD: ❑ Bailer, Size: ____ ❑ Bladder Pump ❑ 2" Submersible Pump ❑ 4" Submersible Pump
❑ Syringe Sampler ❑ Peristaltic Pump ❑ Inertial Lift Pump ❑ Other: _____

MATERIALS: Pump/Bailer: ❑ Teflon® ❑ Stainless Steel
Tubing/Rope: ❑ Teflon® ❑ Polyethylene

SAMPLING EQUIPMENT: ❑ Dedicated ❑ Prepared Off-Site ❑ Field Cleaned
Metals samples field filtered? ❑ Yes ❑ No Method: _____
APPEARANCE: ❑ Clear ❑ Turbid ❑ Color: _____ ❑ Contains Immiscible Liquid
FIELD DETERMINATIONS: pH: _____ Meter Model: _____ Meter S/N: _____
Temperature: _____ Spec. Cond.: _____ Meter Model: _____ Meter S/N: _____
ORP: _____ DO: _____ Turbidity: _____
DUP : ❑ No ❑ Yes Name: _____
MS/MSD : ❑ No ❑ Yes Name: _____
Field Lab Results: ❑N/A pH: _____ DO: _____ Temperature: _____

I certify that this sample was collected and handled in accordance with applicable regulatory and project protocols.

Signature: _____ Date: _____

BROWN AND CALDWELL

LOW-FLOW GROUNDWATER FIELD DATA SHEET

Project Name: ______________________________ Project Number: ____________________

Personnel: _________________________________ Well ID: ___________________________

Purge/Sample Depth: _________________________ Sample ID: _________________________

Actual Time	pH	Temp (°C)	ORP (mV)	Cond ( )	DO (mg/L)	Turbidity (NTU)	DTW (ft)	Pumping Rate (mL/min)	Comments

BORING LOG

BROWN AND CALDWELL	Project Name: Project Number: Project Location:	Permit Number:	Boring No. Sample Boring Page 1 of 1

Geologist/Office	Checked By:	Borehole Diameter:	Screen Diameter and Type:	Slot Size:	Total Boring Depth (ft)
/			NA		30.0 ft.

Start/Finish Date	Drilling Contractor:	Sampling: Hammer Type:	Development Method:
-			

Driller:	Drilling Method:	Drilling Equipment:	Horiz Datum/Proj: Vert Datum: Ground Surface Elev: --	Easting: -- Northing: -- TOC Elev: --

Depth (feet)	Elevation (feet)	USC Soil Type	Description	Blow Counts	Sample No.	Graphic Log: Sample Int	Graphic Log: Recovery	Graphic Log: Lithology	Graphic Log: Backfill	Readings (ppm)	Remarks
5											
10											
15											
20											
25											
30											

Fish Sampling Data Form

Date: **Page: ___ of ___**

Study Area:

Sample Number:

Lat N _____ Lon W _____ GPS? River basin:

Investigators: **Time:**

Weather:
Weather: Last 24 hours

Equipment Used:

Gear □ back pack (Model:) □ seine (Size/mesh:) □ other _____
Block nets used? □ Upstream □ Downstream □ None
Barrier extant? □ Upstream □ Downstream

Sampling Duration Start time _____ End time _____ Shock seconds _____

Field Observations

Specific conductance _____µS/cm
Water temp _____°C
Coincident with habitat survey? □ Yes □ No
Reference reach candidate? □ Yes □ No

Shocker voltage_____

Shocker settings_____

Habitat Description:

HABITAT TYPES
Indicate the percentage of each habitat type present
□ Riffles_____% □ Pools_____% □ Runs_____% □ Snags_____%
□ Submerged Macrophytes_____% □ Other ( )_____%

Species	Length	Weight	Condition	Total Number

(attach additional sheets as necessary)

Brown AND Caldwell

Soil Vapor Sample Collection Field Form

Project:_____ Project #:_____

Date:_____ Personnel:_____

Sample ID: _____

Carbon Filter ID #: _____

Sample location: _____ Depth of sample point below grade: _____

Rainfall: _____ Wind speed (mph) and direction: _____

Start:

Time: _____

Temperature (°C): _____

Barometric Pressure (mmHg):_____

Relative Humidity (%):_____

Flow rate: _____

End:

Time: _____

Temperature (°C): _____

Barometric Pressure (mmHg):_____

Relative Humidity (%):_____

Flow rate: _____

Helium tracer test:

Tubing type used: _____ Length of tubing (cm): _____ Tubing volume (cc): _____

1 to 3 volumes purged @ < 200cc/min? YES NO

Chamber tracer gas conc.: _____ Tracer gas conc. during purging: _____

Weather conditions during probe installation:

Temperature (°C): _____ Rainfall: _____ Barometric Pressure (mmHG): _____

Wind direction: _____ Wind speed (mph): _____

Comments:

_____

_____

_____

ATTACHMENT B

Analytical Laboratory QA Manual and SOPS (CD-ROM)

ATTACHMENT C

Geotechnical Laboratory QA/QC Manual and ASTM Standards

GeoTesting
express
a subsidiary of Geocomp Corporation

Quality Manual

Revision 11.6 – per ISO 17025-2005

July, 2009

Gary T. Torosian

Written By: Gary T. Torosian – Director of Testing Services

W. Allen Marr

Approved By: Dr. W. Allen Marr - Chief Engineer

There is only one controlled copy of this document: the signed original. Unsigned copies of this document are considered uncontrolled.

© 2009 GeoTesting Express. All rights reserved

TABLE OF CONTENTS

1.0 SCOPE 4

2.0 NORMATIVE REFERENCES 4

3.0 TERMS AND DEFINITIONS 4

4.0 MANAGEMENT REQUIREMENTS 5
- 4.1 Organization 5
- 4.2 Management System 16
- 4.3 Document Control 17
  - 4.3.1 General
  - 4.3.2 Document Approval and Issue
  - 4.3.3 Document Changes
- 4.4 Review of Requests, Tenders and Contracts 18
- 4.5 Subcontracting of Tests and Calibrations 19
- 4.6 Purchasing Services and Supplies 19
- 4.7 Service to the Customer 19
- 4.8 Complaints 20
- 4.9 Control of Nonconforming Testing and/or Calibration Work 20
- 4.10 Improvement 20
- 4.11 Corrective Action 21
- 4.12 Preventive Action 21
- 4.13 Control of Records 21
- 4.14 Internal Audits 28
- 4.15 Management Reviews 28

5.0 TECHNICAL REQUIREMENTS 29
- 5.1 General 29
- 5.2 Personnel 29
- 5.3 Accommodation and Environmental Conditions 32
- 5.4 Test and Calibration Methods and Method Validation 32
  - 5.4.1 General
  - 5.4.2 Selection of Methods
  - 5.4.3 Laboratory-developed Methods
  - 5.4.4 Non-Standard Methods
  - 5.4.5 Validation of Methods
  - 5.4.6 Estimation of Uncertainty of Measurement
  - 5.4.7 Control of Data
- 5.5 Equipment 34
- 5.6 Measurement Traceability 37

5.7 Sampling 39
5.8 Handling of Test and Calibration Items 39
5.9 Assuring the Quality of Test and Calibration Results 40
5.10 Reporting the Results 42

1.0 SCOPE

Presented in this document is the Quality Manual for GeoTesting Express, Inc. (GTX). This document compliments other referenced documents which are specific to the laboratory's operation.

Created in 1989, GTX is an independent testing laboratory with locations in Boxborough, MA and Atlanta, GA. GTX is committed to adhering to high standards of quality while providing quick turnaround of test results for soil, rock, geosynthetics, aggregate, asphalt, concrete and other "geo" materials. GTX services owners, engineers, contractors, developers, manufacturers, government agencies and other laboratories.

2.0 NORMATIVE REFERENCES

This quality manual contains references to the following documents:

- ANSI/ASQC Q9001-2000 Quality Management Systems – Requirements
- ISO/IEC Guide 17025-2005 General Requirement for the Competence of Testing and Calibration Laboratories
- American Society for Testing and Materials (ASTM) Test Methods and Standards of Practice
- American Association of State Highway and Transportation Officials (AASHTO) Test Methods
- United States Army Corps of Engineers Laboratory Soils Testing Test Standards EM 1110-2-1906 (1970)
- Federal Test Method Standard Number 101C, Method 2065 (1980)
- Geosynthetic Research Institute Standard Test Methods

3.0 TERMS AND DEFINITIONS

AASHTO: n – American Association of State Highway and Transportation Officials. AASHTO is a nonprofit, nonpartisan association representing highway and transportation departments in the 50 states, the District of Columbia and Puerto Rico. It provides standard test methods or specifications that have been developed by and meets the approval of the organization.

ASTM: n – American Society for Testing and Materials. A not-for-profit organization which provides standard test methods or specifications that have been developed within the consensus principles and that meets the approval requirements for the organization.

Client: n – The company or individual responsible for payment of delivered product or services.

Contract: n – Formal or verbal agreement between the Client and the supplier with the terms and requirements for the testing services detailed. The contract terms may include specific testing services, along with the agreed price, and delivery schedule.

Geosynthetic: n – a planar product manufactured from polymeric material used with soil, rock, earth, or other geotechnical engineering related material as an integral part of a man-made project, structure or system.

ISO: n – International Standards Organization for Standardization (ISO) which specifies the quality systems requirements.

IRM: n – Internal Reference Materials are standard materials of known quality or whose quality has previously been established by the laboratory and are used to validate test methods, equipment performance and to qualify technicians.

Product: n – The final report submitted to the client describing the test results and test data.

Quality Assurance: n – The system of testing, inspection, review, documentation, etc. to verify the existence, implementation, and maintenance of the Quality System.

Quality Control: n – The system of testing, inspection, review and documentation which are designed to verify that the data generated in the laboratory are produced within known limits of accuracy and precision.

Quality Policy: n – The documented quality commitment and objectives of the supplier.

Quality System: n – The entire quality program consisting of quality control, quality assurance, and management programs to verify that the company's Quality Policy and requirements of the client are achieved.

Sample: n – The material delivered to the laboratory as a source of test specimens.

Specimen: n – A specific portion of a sample upon which a test is performed. Typically, specimens must be specified dimensions, volume or weight.

4.0 MANAGEMENT REQUIREMENTS

4.1 Organization

4.1.1

GeoTesting Express, Inc. (GTX) is a third party testing laboratory, established in 1989 and incorporated in 1994. GTX is committed to adhering to high standards of quality while providing quick turnaround of test results. Periodic self-evaluations of testing practice, procedures, reporting, etc. help us meet our goals. The staff (from owner to technicians) is committed to our stated goals.

4.1.2

The resources necessary to meet our quality commitments and satisfy our clients' needs are provided by the company. The quality system outlined in this Quality Manual is designed to meet requirements in ANSI/ISO/IEC 17025-2005. Employees of GTX are responsible for adhering to procedures outlined in the Quality Manual while satisfying our clients' needs.

4.1.3

GTX is a permanent laboratory with two locations. The MA laboratory is located at 1145 Massachusetts Avenue in Boxborough, MA 01719 and occupies an approximately 11,600 square feet section of the building. Approximately 3,500 square feet is allocated to office space and 8,100 square feet allocated to the testing laboratory. The GA laboratory is located at 2662 Holcomb Bridge Road Suite 310 in Alpharetta, GA 30022 and occupies approximately 5,000 square feet, of which 1,200 is allocated to office space. Laboratory testing equipment is housed and used in the laboratory. Field testing equipment is housed in the laboratory and transported to the field for use. A floor plan of the laboratory showing the location of testing activities is maintained by the Laboratory Manager

4.1.4

GTX is a subsidiary of Geocomp Corporation. Personnel of GTX are independent from the other divisions of Geocomp. An organizational/human resources flow diagram is presented in Figure 1. The other divisions of Geocomp do not exert influence upon the GTX laboratory or its employees. GTX is an impartial, 3rd party laboratory whose employees are free from undue pressures which could influence their technical decisions.

Geocomp is headed by a Chief Engineer who is also the owner of the firm. GTX's leader is the Director of Testing Services who reports directly to the Chief Engineer..

Chief Engineer: Has overall authority on the laboratory and primary technical authority. Chief Engineer provides oversight of technical activities and resources.

Director of Testing Services: Is responsible for the day-to-day management of all GTX branches. This person is responsible for both business development and operational activities within the testing division. This person is responsible for contract review. He/she will perform quality assurance checks on reports generated by GTX.

Figure 1. GeoTesting Express, Inc.
Organizational/Human Resources Flow Diagram

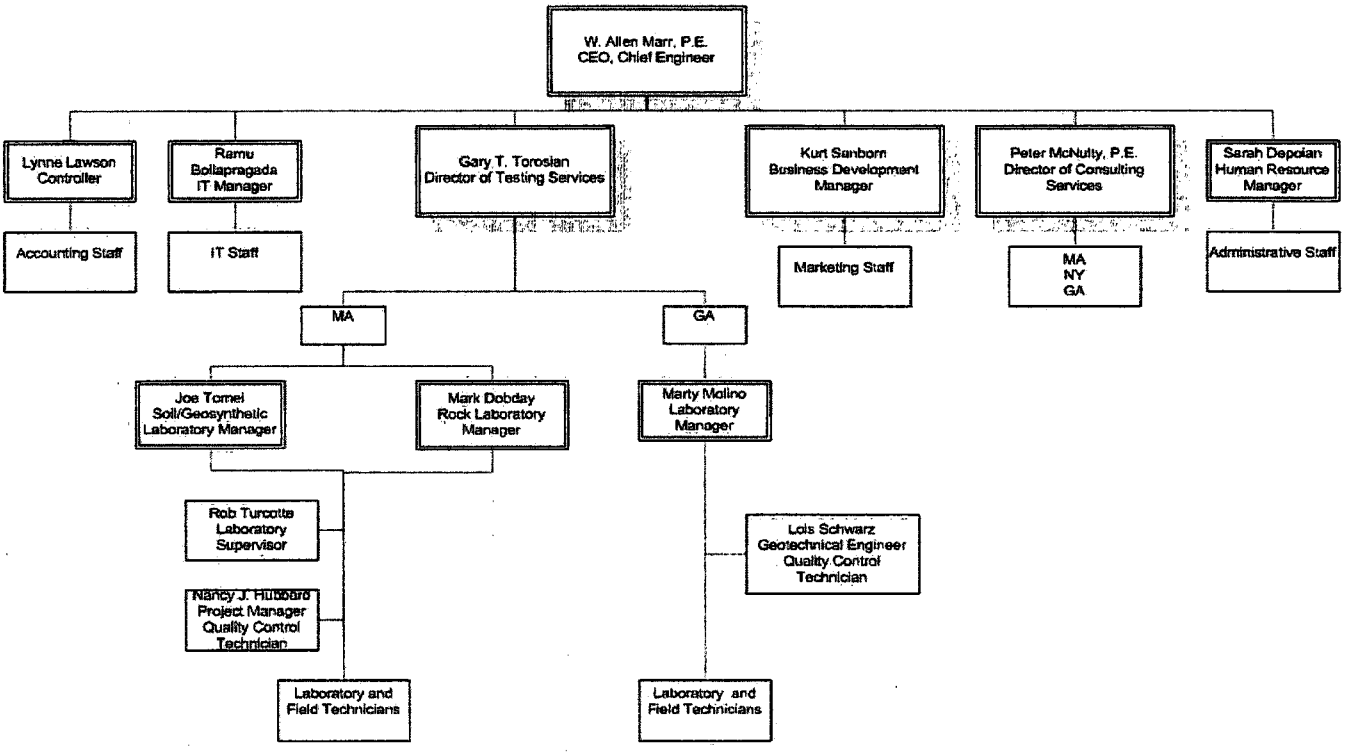

Laboratory Manager: Responsible for scheduling, performing and reporting for the laboratory and field. Responsible for health and safety in the laboratory and is the main client liaison during the testing portion of a project. This person is responsible for maintaining the testing equipment and laboratory facilities.

Quality Manager: This person is independent of the laboratory operations and reports directly to the Director of Testing Services. He/she establishes, manages and verifies and effective quality system. This person will perform quality assurance checks on reports generated by the laboratory. This person is authorized to implement changes to the quality system and is charged with the responsibility of reporting corrective actions to management.

Quality Control Technician: Responsible for assisting the Quality Manager implement and maintain the quality system prescribed by this quality manual in the laboratory.

Laboratory and Field Technicians: Person(s) responsible for receiving samples, conditioning, preparing and testing them. Technicians prepare test data and provide draft reports to management.

Controller: This person is responsible for the invoicing, collections, payroll, other payables and financial

reporting of the company.

Administrative Staff: This group performs duties related to invoicing, payroll and collections. Basic administrative duties such as phone answering, shipping and filing are also carried out by this staff.

Position descriptions for each operational position in the laboratory/field staff are given below. Resumes of the supervisory technical staff (Chief Engineer, Director of Testing Services and Laboratory Manager(s)) are located with the Director of Testing Services and can be found in GTX's Statement of Qualifications.

Chief Engineer

Duties

The Chief Engineer has overall technical responsibility of the laboratory including soils, geosynthetics, rock, aggregate, asphalt and concrete testing. This person has the ultimate responsibility ensuring the technical correctness of activities associated with laboratory and field testing. Some tasks performed by the Chief Engineer include devising test programs for clients, checking final reports, interpreting report data and client liaison.

Supervision Exercised/Received

Overall technical responsibility of laboratory operations. Oversees technical work of Laboratory Manager, Assistant Laboratory Manager (if applicable), Quality Control Technician, laboratory and field technicians and applicable administrative personnel. Reports to Owner.

Minimum Qualifications

Education:	Master's Degree in Civil Engineering (preferably geotechnical)
Experience:	Ten years experience in geotechnical engineering field with five years experience testing of construction materials (soils, geosynthetics, concrete, etc.) Registered Professional Engineer

Director of Testing Services

Duties

The Director of Testing Services has overall management responsibility for all GTX laboratories. This person is responsible for seeing that each laboratory reaches its sales goals, provides clients with the best possible service, and has all resources to achieve their goals. Other duties include: business development,

writing proposals, and providing Branch and Laboratory Managers with assistance.

Supervision Exercised/Received

The Director of Testing Services exercises supervision over Laboratory Managers, Assistant Laboratory Managers, Quality Control Technician, Laboratory and Field Technicians and applicable administrative personnel. The Director of Testing Services works under the supervision of the Chief Engineer.

Minimum Qualifications

Education: Bachelor's Degree in Civil Engineering or equivalent (preferably geotechnical)
Experience: Five years experience in laboratory/field testing of construction materials (soils, geosynthetics, concrete, etc.)
Five years management experience

Quality Manager

Duties

The Quality Manager must be someone not directly involved with the day to day testing activities of the laboratory. The Quality Manager's duties can be performed by someone knowledgeable about quality issues and someone who performs other functions in the company. The Quality Manager is involved with all quality aspects of the laboratory approving and implementing the quality system.

Supervision Exercised/Received

Overall responsibility of laboratory quality plan. The Quality Manager would typically work directly under the supervision of the Director of Testing Services or the Chief Engineer. Assists the Laboratory Manager, Assistant Laboratory Manager or Quality Control Technician with quality issues.

Minimum Qualifications

Education: Bachelor's Degree in Engineering or related field or at least ten years experience
Experience: Five years experience in laboratory/field testing of construction materials (soils, geosynthetics, concrete, etc.)

Branch Manager

Duties

The Branch Manager has responsibility for a specific branch office of GTX. The Branch Manager is

responsible for management and business development of the office. The Branch Manager maintains a clean, functional office. He/she is responsible for providing various reports pertaining to production, quality, and operations to the Director of Testing Services. The Branch Manager deals with clients on a regular basis and works with the Laboratory Manager to ensure projects are completed on time and accurately. He/she approves reports before being shipped to the client.

Supervision Exercised/Received

Overall responsibility of branch office. Oversees work of the Laboratory Manager, Laboratory/Field Technicians, Assistant Laboratory Manager (if applicable), Quality Control Technician and applicable administrative personnel. Reports to Director of Testing Services.

Minimum Qualifications

Education: Bachelor's Degree in Civil Engineering or related field
Experience: Five years experience in laboratory/field testing of construction materials (soils, geosynthetics, concrete, etc.)
Two years experience in some management capacity

Laboratory Manager

Duties

The Laboratory Manager manages the testing laboratory. This person has the responsibility of keeping the laboratory/field operations of the company running with respect to the following: quality, quickness and safety. The Laboratory Manager is the primary client liaison. The Laboratory Manager ensures projects are completed on time and accurately. He/she approves reports before being sent for quality assurance checks and shipped to the client.

Supervision Exercised/Received

Overall responsibility of laboratory operations. Oversees work of all Laboratory/Field Technicians, Assistant Laboratory Manager (if applicable), Quality Control Technician and applicable administrative personnel. Reports to Branch Manager.

Minimum Qualifications

Education: Bachelor's Degree in Civil Engineering or related field, or at least five years experience
Experience: Five years experience in laboratory/field testing of construction materials (soils, geosynthetics, concrete, etc.)
Two years experience in some management capacity

Assistant Laboratory Manager (if applicable) / Quality Control Technician

Duties

The Assistant Laboratory Manager assists the Laboratory Manager run the materials testing laboratory including soils, geosynthetics, rock and concrete testing. This person can act as the Quality Control Technician and is responsible for maintaining equipment and equipment calibrations. Training is the responsibility of the Assistant Laboratory Manager. The Assistant Laboratory Manager assists with report generation, quality control and client interface. The Assistant Laboratory Manager will also perform production testing when called upon. Sample management is a primary responsibility of the Assistant Laboratory Manager.

Supervision Exercised/Received

The Assistant Laboratory Manager exercises supervision over Laboratory and Field Technicians. The Assistant Laboratory Manager works under the supervision of the Laboratory Manager.

Minimum Qualifications

Education: Bachelor's Degree
Experience: Three years experience in laboratory/field testing of construction materials (soils, geosynthetics, concrete, etc.)

Laboratory Technician (IV)

Duties

A Laboratory Technician IV will perform more complicated as well as basic laboratory tests on construction materials with little to no supervision. A Laboratory Technician IV is also responsible for assisting the Assistant Laboratory Manager train other Laboratory Technicians. A Laboratory Technician IV will also perform equipment calibrations/verifications.

Supervision Exercised/Received

A Laboratory Technician IV will act as a mentor to other Laboratory Technicians and assist them in day to day functions. A Laboratory Technician IV works under supervision of the Assistant Laboratory Manager (if applicable) and Laboratory Manager.

Minimum Qualifications

Education: 4 years beyond high school in science or math

Experience:	Completed all requirements of Laboratory Technician III. Working knowledge of all aspects of the lab and field operation. Proficient in all core soil and geosynthetic tests and 20 advanced soil and/or geosynthetic tests and 8 field tests.
Certifications/ Licenses:	40 hour OSHA HAZWOPPER; NICET Level III; ACI Laboratory Testing Technician Grade II

Laboratory Technician (III)

Duties

A Laboratory Technician III will perform core and advanced laboratory tests with little to no supervision on construction materials. A Laboratory Technician III can work in the field after gaining enough experience and knowledge in the laboratory.

Supervision Exercised/Received

A Laboratory Technician III is primarily the responsibility of the Laboratory Manager but is trained by Laboratory Technician IV, Assistant Laboratory Manager and/or the Laboratory Manager.

Minimum Qualifications

Education:	Completed all requirements of Laboratory Technician II or 4 years beyond high school.
Experience:	Completed all requirements of Laboratory Technician II. Proficient in 50 core soil or geosynthetic tests and/or 40 core soil or geosynthetic tests and 6 field tests AND proficient in 10 advanced soils or geosynthetics tests.
Certifications/ Licenses:	40 hour OSHA HAZWOPPER; NICET Level II; ACI Laboratory Testing Technician Grade I

Laboratory Technician (II)

Duties

A Laboratory Technician II will perform core and advanced laboratory tests with little to no supervision on construction materials. A Laboratory Technician II can work in the field after gaining enough experience and knowledge in the laboratory.

Supervision Exercised/Received

A Laboratory Technician II is primarily the responsibility of the Laboratory Manager but is trained by

Laboratory Technician IV, Assistant Laboratory Manager and/or the Laboratory Manager.

Minimum Qualifications

Education: Completed all requirements of Laboratory Technician I or 2 years beyond high school.
Experience: Completed all requirements of Laboratory Technician I. Proficient in 30 core soil or geosynthetic tests and/or 25 core soil or geosynthetic tests and 3 field tests AND proficient in 5 advanced soils or geosynthetics tests.
Certifications/ Licenses: NICET Level I

Laboratory Technician (I and Trainee)

Duties

A Laboratory Technician I will perform core laboratory tests with little to no supervision on construction materials.

Supervision Exercised/Received

A Laboratory Technician I is primarily the responsibility of the Laboratory Manager but is trained by Laboratory Technician IV, Assistant Laboratory Manager and/or the Laboratory Manager.

Minimum Qualifications

Education: High school diploma
Experience: Proficient in 12 core soil or geosynthetic tests.

Certifications/ Licenses: none

Field Technician

Duties

A Field Technician will perform field functions on soils, asphalt and/or concrete with no supervision. These functions may include: field density testing using a nuclear density gauge, field density testing using a sand cone apparatus, field electrical resistivity testing of soils, field CBR tests, field double ring infiltrometer tests, field Boutwell permeability tests, and field sampling of soils including Shelby tube sampling. Additional functions may include: slump, air content, temperature and cylinder preparation of

concrete.

Supervision Exercised/Received

A Field Technician works directly under the Laboratory Manager and/or Assistant Laboratory Manager. Training is performed by the Laboratory Manager, Assistant Laboratory Manager and other Field Technicians.

Minimum Qualifications

Education:	High school diploma
Experience:	basic understanding of laboratory testing
Certifications/ Licenses:	If using nuclear density gauge must have Troxler Radiation Safety certification. If working on hazardous sites, must have OSHA 40 hour HAZWOPPER course. If conducting concrete sampling/testing, must have MCIB Class A License. ACI concrete field testing technician – Grade I may also be required for certain project sites.

4.1.5

GTX is committed to providing the necessary resources to achieve its stated goals. This includes:

- Trained personnel to manage and perform testing as outlined by appropriate standards
- Equipment with capabilities, accuracy and precision as prescribed by appropriate standards
- Computers necessary for data acquisition, analysis, report generation, accounting and marketing
- Facilities necessary to conduct testing in appropriate atmosphere

The following outlines the specific responsibilities and authorities for each key position.

Chief Engineer:	1, 2, 3, 14, 22, 23, 24
Director of Testing Services:	1, 2, 3, 4, 5, 14, 15, 19, 20, 21, 22, 23, 24, 26
Branch Manager:	1, 2, 3, 4, 5, 6, 7, 8, 9, 13, 14, 15, 16, 17, 18, 19, 20, 21, 22, 23, 24, 25, 26, 27, 28
Laboratory Manager:	1, 2, 4, 5, 6, 7, 8, 9, 13, 14, 15, 16, 17, 18, 19, 20, 21, 22, 23, 24, 25, 26, 27, 28
Quality Manager:	1, 2, 4, 5, 20, 21

Technicians: 6, 7, 9, 10, 11, 12, 13, 16, 17, 21, 25, 28

1. Management review
2. Develop quality system
3. Contract review
4. Document control
5. Pre-approved list of vendors and accredited laboratories
6. Incoming inspection
7. In-process inspection
8. Final inspection
9. Sample log-in
10. Sample conditioning
11. Specimen preparation
12. Testing
13. Data entry
14. Analysis
15. Report generation
16. Archive
17. Equipment verification and calibration
18. Scheduling testing and calibration
19. Corrective action and customer complaints
20. Internal and external auditing
21. Training
22. Personnel hiring and firing
23. Purchasing
24. Building maintenance and operation
25. Shipping and receiving
26. Computers
27. Project files (records)
28. IRMs

4.1.6

Open lines of communication exist between all levels of GTX employees from technician level to Chief Engineer. Periodic meetings are held and documented to discuss the quality system, problems, corrective actions and improvement.

4.2 Management System

4.2.1

GTX employs a management team appropriate to the volume and nature of laboratory testing conducted. GTX maintains documented procedures which make up the quality system and are located in the Quality

Manual. These procedures are followed by employees of GTX. The Quality Manager is responsible for implementing the quality system. The Quality Manual is located in the Quality Manager's office and is available to each employee by using a sign in/out sheet. The Quality Manager is responsible for distribution and maintenance of controlled documents related to the quality system.

4.2.2

The quality system outlined in this Quality Manual is designed to meet requirements in ANSI/ISO/IEC 17025-2005. Employees of GTX are responsible for adhering to procedures outlined in the Quality Manual while satisfying our clients' needs. Improvements to procedures are coordinated with proper authority to assure uniform compliance. Changes are made to existing systems only after a review on the effect of such changes is performed. Employees of GTX have access to the appropriate documentation needed to implement the quality system.

GTX's management is committed to good professional practice and to providing quality testing services to its clients. In addition, GTX's management is committed to continually improving the effectiveness of the management system. Testing services are conducted in accordance with stated methods and clients' instructions. GTX's standard of service is to score a 3 or higher on both its customer survey and proficiency tests. These results are tracked and improvement is expected over time. All personnel of GTX are required to familiarize themselves with the GTX quality system and appropriate documentation. This quality system includes the following elements:

- GTX has in place a quality plan which is described in the Quality Manual. This Manual is kept up to date by the Quality Manager.
- Prior to embarking on a project, the resources necessary for the execution of the project are in-house and fit to complete the task. This includes equipment and technicians. Both must have passed quality system reviews to determine fitness (calibrations, accuracy for equipment and training for technicians)
- GTX performs an internal quality audit once per year. As part of this audit, quality documents are updated and reviewed by the Quality Manager, Branch Manager and Laboratory Manager.
- Management and staff of GTX maintain current memberships in outside organizations such as ASTM, ASCE, NAGS, etc which enable them to meet or exceed current practices in the geosynthetics and soils industry.
- Technicians sign their work off in the appropriate location on laboratory work sheets; whoever performs the peer review also signs off on the laboratory work sheet. Final reports are signed by the Laboratory Manager, Branch Manager, Chief Engineer, Assistant Laboratory Manager or Quality Manager as part of the final verification.
- GTX performs tests in accordance with published standards and with assistance from their own standard operating procedures. These procedures are documented and available to all persons within GTX and help reduce ambiguity where confusion may otherwise exist. These documents are available to clients upon request.
- GTX tracks each individual project entering the laboratory with its own unique sequential project identification number.

GTX's quality system objectives are as follows:

- Provide quality test results by conducting testing in accordance with published standards, accepted industry practice and clients' instructions within the time required by the client.
- Continually improve quality by self evaluation, process review and documentation.
- Constantly meet or exceed our clients' expectations.

4.3 Document Control

4.3.1

Documents relating to the GTX quality plan are controlled. These include the Quality Manual; test procedures; documents required by GTX to ensure effective planning, operation or and control of its processes; and records required by ISO 17025. Records are maintained indicating controlled documents and those who possess them. Controlled Documents are located where appropriate. Test standards are available in the laboratory. GTX Standard Operating Procedures are located in the Laboratory Manager's office. GTX's Quality Manual is located in the Quality Manager's office. Both SOPs and the Quality Manual are available by using a sign in/out form.

4.3.2

Controlled documents are reviewed and approved by the Quality Manager and or Director of Testing Services. Controlled documents (such as the Quality Manual, SOPs, standards and report blanks) are numbered by a unique identification system. Persons receiving a copy of a controlled document are assigned a unique numbered copy of that document. A master list of control documents is maintained which contains the following:

- Unique number or name of controlled document
- Current revision # in use
- Date of issue of current revision
- Total pages
- Location of document

This system allows for tracking current as well as obsolete copies. Master copies of current controlled documents are kept with the Laboratory Manager, Branch Manager or the Quality Manager. The master list and each controlled document's list are maintained by and kept with the Quality Manager.

It is possible to circulate an uncontrolled copy of a controlled document. The cover of the document must clearly state "uncontrolled document" or "UC".

Invalid and/or obsolete controlled documents are removed from those who possess them. This is possible

by utilizing the controlled document lists to locate current copies. Uncontrolled copies do not need to be retrieved and/or replaced. Obsolete documents are marked with an "Obsolete" stamp. One copy of obsolete documents is retained for historical preservation and the remainder destroyed.

4.3.3

Changes to controlled documents are reviewed and approved as stated in section 4.2. Each year, documents are re-issued if there have been revisions or changes made, however procedural changes are issued and used immediately following the revision. When changes are made to controlled documents, the Quality Manager or Director of Testing Services is responsible for updating current copies of the manual.

Master copies of documents are "read only" protected and can only be modified by the Quality Manager or Director of Testing Services.

4.4 Review of Requests, Tenders and Contracts

A contractual agreement should exist between GTX and the client for laboratory and/or field services supplied by GTX before GTX performs any of these services. This contractual agreement can be in the form of a Purchase Order (PO), contract or verbal ok. GTX has a procedure in place for reviewing contracts which adhere to the following guidelines:

- Requested services are defined
- Verbal orders are followed with documented requests
- GTX can perform requested services
- GTX can perform the requested services within schedule limits
- GTX can perform the requested services under proposed pricing structure

Review of these contractual agreements is the responsibility of the Chief Engineer, Director of Testing Services and/or Laboratory Manager. The Director of Testing Services coordinates this activity.

Changes which may occur in the scope of work and/or time schedules due to the client's needs are reviewed in the same way as initial contracts. The same key elements are reviewed with respect to the proposed changes. Any condition encountered during execution of the requirements of the contract which changes the scope of work established by the original contract is documented. A written amendment to the contract is agreed upon by both GTX and the client with price and schedule adjustments.

Conditions which change the scope of work encountered during execution are brought to the attention of the Laboratory Manager who in turn initiates a discussion with the client. After the client and GTX mutually agree upon change orders, these changes in scope of work are reviewed with the staff performing this work.

Contracts, amendments and change orders are recorded and signed by responsible representatives of both GTX and the client. These records are filed in the yellow section of a specific project file.

4.5 Subcontracting of Tests and Calibrations

In the event that GTX can not perform a portion of the work for which it is contracted, a subcontractor is used. GTX evaluates and selects subcontractors on the basis of their ability to meet requirements and the nature of their quality system. Subcontractors shall have a quality system equal to or more in-depth than that of GTX. Qualified subcontractors are listed on an approved vendor list which GTX maintains and makes available to the appropriate personnel.

GTX informs its clients of the subcontracted work and gains approval from the client for undertaking such activity. Reports sent to the client which have test data supplied by a subcontractor are clearly marked as such.

4.6 Purchasing Services and Supplies

Purchases of services and supplies that affect the quality of tests are made by using the most qualified vendor at the most reasonable price. GTX maintains a vendor list which is described below. Purchase orders with unique numbers shall be issued for each purchase. A description of the service or supply ordered shall be on the purchase order. Once a purchase is received, it is checked against the appropriate purchase order.

When supplies are received in the laboratory, a check is performed on the product to ensure it meets the specifications of the end user. For instance, when a piece of testing equipment is purchased, that piece of equipment is subject to a calibration/verification check prior to being put into use. If the piece of equipment fails the calibration/verification check, it is sent back to the manufacturer for a replacement.

GTX maintains a vendor list which lists the vendor, phone number, description of item(s) purchased and overall rating. The overall rating is based on prior history, pricing, availability, service, quality and ease of use. Vendors who repeatedly fail to perform up to standards are no longer used. Heavy consideration is given to those vendors whom GTX has fostered a long-term relationship with. When requested, a client's representative is afforded the right to verify the vendor's premises.

4.7 Service to the Customer

GTX's level of service can be measured by the results of its client satisfaction survey. The survey is sent to each client upon completion of a project. The survey asks the client to rate GTX on a number of different items on an escalating scale (1-5). GTX's goal is to receive a grade of 3 or higher (1 = failed to meet expectations and 5 = exceeded expectations). GTX aims to continuously improve its quality system

in order to better serve our clients. A return rate of 10% is required to validate the survey. It is our policy to respond to all complaints received in the customer survey. Data obtained in the customer survey is discussed in quarterly management review meetings.

4.8 Complaints

If a complaint is received by the laboratory, the Quality Manager or Director of Testing Services completes a Complaint Form. Resolution of the complaint is recorded on the Complaint Form and maintained in the corrective action file.

4.9 Control of Nonconforming Testing and/or Calibration Work

Test data used to create a report is checked by the Laboratory Manager, Branch Manager, Director of Testing Services, Quality Manager or Chief Engineer. Final reports are checked, signed and dated by the Laboratory Manager, Branch Manager Quality Manager, Director of Testing Services or Chief Engineer before being delivered to the client. Laboratory work sheets and test reports have a comments section where any out of ordinary, pertinent information is included concerning the test.

If an error is detected in the test data, the Laboratory Manager performs a preliminary investigation. If the preliminary investigation finds and resolves the problem, re-testing is performed. If, upon the preliminary investigation, there is no acceptable reason found for the error, the Quality Manager is consulted and a more in depth investigation is performed. Findings and resolutions are documented.

Nonconforming reports identified by the client are corrected, checked by the Laboratory Manager, Branch Manager, Director of Testing Services, Quality Manager or Chief Engineer and shipped to the client. Both the re-submitted report and the nonconforming report are kept in the project file. If re-testing is required to remedy the situation, it is done at no cost to the client. Again, nonconforming data and/or reports require documentation in the form of a corrective action report. Customer complaints require documentation by way of the corrective action report.

After nonconforming testing and/or calibrations are corrected, it is the responsibility of the Laboratory Manager, Branch Manager, Director of Testing Services, Quality Manager or Chief Engineer to authorize the resumption of work.

4.10 Improvement

GTX strives for continuous improvement in its procedures. The effectiveness of GTX's efforts can be measured by the following means over time:

- Client survey results
- Internal reference material (IRM) testing

- Corrective action files

All of the above are integral parts of our quality system and are reviewed by management at regular intervals.

4.11 Corrective Action

Investigations are performed when non-conformities are found from the analysis of materials, test reports or customer complaints. The Laboratory Manager performs a preliminary investigation of all complaints. If the preliminary investigation finds and resolves the problem, the problem is corrected and the process is documented in a Corrective Action Report. If, upon the preliminary investigation, there is no acceptable reason found for the error, the Quality Manager and/or Director of Testing Services is consulted and a more in depth investigation is performed. Once a suitable resolution is determined, findings and resolutions are documented in a Corrective Action Report.

A corrective action file is maintained in the Laboratory Manager's office to document non-conformities. Corrective Action Reports are filled out by the Laboratory Manager or Quality Manager. Corrective Action Reports are reviewed by the Management at the end of each quarter. Appropriate actions are taken to eliminate the possibility of the same problem occurring again. The laboratory staff is part of this process.

A corrective action summary list is constructed and maintained by the Laboratory Manager. This list helps aid in tracking customer complaints, audit deficiencies, etc. A quarterly review is conducted with the aid of information contained in this list.

4.12 Preventative Action

To aid GTX's pro-active approach to quality, GTX utilizes a Preventative Action Form to solve potential problems. A preventative action can be initiated by any GTX employee. Preventative action is also evidenced by our IRM program. Our goal is to be within ± 2 standard deviations of any IRM standard.

The procedure for preventative action includes:

a) Determining potential nonconformities and their causes
b) Evaluating the need for action to prevent occurrence of nonconformities
c) Initiating and implementing preventative action
d) Keeping records of the results of actions taken
e) Reviewing preventative action taken over time

4.13 Control of Records

GTX has established and maintained procedures for identifying, collecting, indexing, accessing, filing, storage, maintenance and disposal of quality and technical records

GTX maintains quality records chronologically and via project numbers (for project files). Project files are maintained in secure file cabinets in the laboratory for approximately one year, and then archived in the long term storage area. The following four types of quality records are maintained:

a) Project Files
   a. Project verification
   b. Test assignment forms
   c. Data sheets or electronic test files with raw data
   d. Reports
   e. Calculations
   f. Correspondence

b) Quality Assurance
   a. Management review
   b. Internal and external audits
   c. Corrective action file
   d. Client survey
   e. Customer complaint
   f. Preventative action

c) Personnel
   a. Training log
   b. Resumes

d) Equipment
   a. Maintenance and calibration
   b. IRM

Test reports have unique dates and number identification to segregate them from other reports. Copies of reports sent to clients are stored in the project file. A project file consists of at least three parts: project information (contract, PO, quote, communications, chain of custodies, etc) in a yellow folder, laboratory test sheets in a blue folder and reports in an orange folder.

Other quality records such as personnel, equipment records, and quality assurance files are stored in the Laboratory Manager's office.

Records for each test or calibration performed contain the identity of the individual responsible for the sampling/testing and or calibration as well as the individual responsible for checking the results.

The following four pages contain sample report formats - two soil tests and two geosynthetics tests. A complete set of report formats is located in the Laboratory Manager's office. These are sample reports for which GTX performs testing with sanitized data for customer confidentiality

Quality records are retained for a minimum of three years. Quality records are archived in either the GTX archive files or the Laboratory Manager's office.

GeoTesting
express
a subsidiary of Geocomp Corporation

Client:	Geocomp Consulting				
Project:	XXXXXX				
Location:	XXXXXX		Project No:		GTX-6585
Boring ID:	BP-2	Sample Type:	bag	Tested By:	pcs
Sample ID:	S-3	Test Date:	03/31/06	Checked By:	jdt
Depth :	---	Test Id:	88152		
Test Comment:	---				
Sample Description:	Moist, brown silty sand with gravel				
Sample Comment:	---				

Particle Size Analysis - ASTM D 422

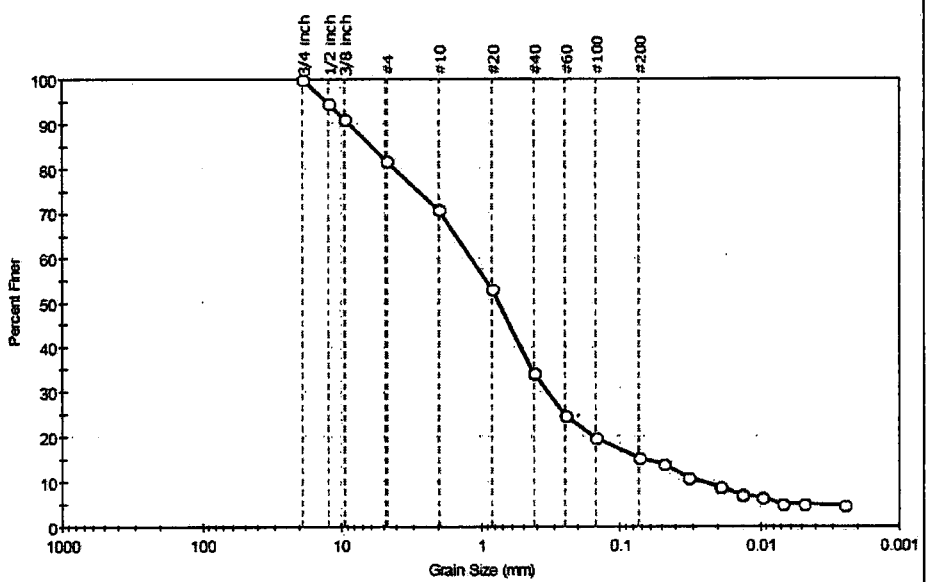

% Cobble	% Gravel	% Sand	% Silt & Clay Size
–	18.4	66.4	15.2

Sieve Name	Sieve Size, mm	Percent Finer	Spec. Percent	Complies
3/4 inch	19.00	100		
1/2 inch	12.50	96		
3/8 inch	9.50	92		
#4	4.75	82		
#10	2.00	71		
#20	0.84	53		
#40	0.42	34		
#60	0.25	25		
#100	0.15	20		
#200	0.074	15		
---	Particle Size (mm)	Percent Finer	Spec. Percent	Complies
---	0.0420	14		
---	0.0327	11		
---	0.0190	9		
---	0.0136	7		
---	0.0097	6		
---	0.0069	5		
---	0.0049	5		
---	0.0025	5		

Coefficients

D_{85} = 6.0845 mm	D_{30} = 0.3313 mm
D_{60} = 1.1732 mm	D_{15} = 0.0684 mm
D_{50} = 0.7471 mm	D_{10} = 0.0252 mm
C_u = 46.556	C_c = 3.713

Classification

ASTM N/A

AASHTO Stone Fragments, Gravel and Sand (A-1-b (0))

Sample/Test Description

Sand/Gravel Particle Shape : ANGULAR

Sand/Gravel Hardness : HARD

CONSOLIDATED UNDRAINED TRIAXIAL TEST by ASTM D4767

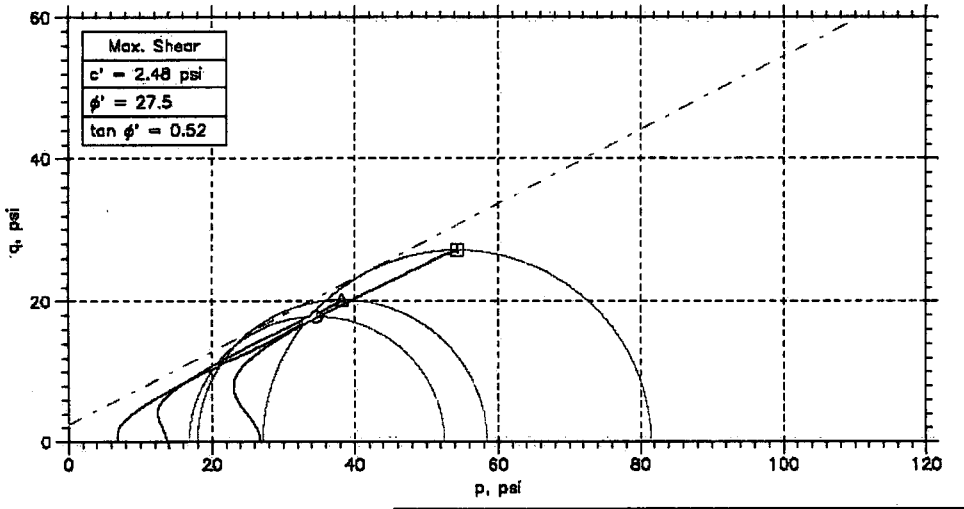

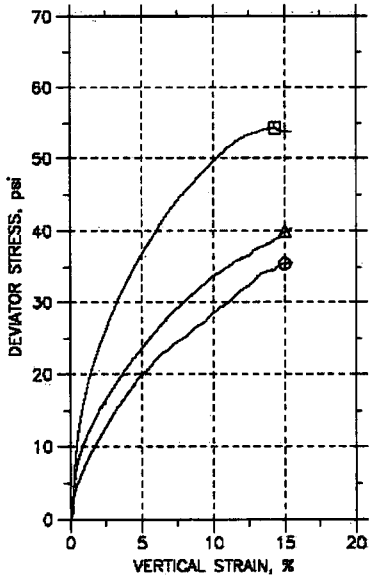

Symbol		⊙	△	⊡	
Sample No.		U-1	U-1	U-1	
Test No.		CU1	CU2	CU3	
Depth		15-17 ft.	15-17 ft.	15-17 ft.	
Initial	Diameter, in	1.41	2.01	2.87	
	Height, in	2.8	4.01	5.8	
	Water Content, %	21.8	23.9	21.4	
	Dry Density, pcf	99.05	99.3	106.5	
	Saturation, %	83.8	92.6	99.0	
	Void Ratio	0.702	0.697	0.583	
Before Shear	Water Content, %	23.4	27.2	23.3	
	Dry Density, pcf	103.2	97.21	103.5	
	Saturations, %	100.0	100.0	100.0	
	Void Ratio	0.633	0.734	0.629	
	Back Press., psi	106	103	100	
Ver. Eff. Cons. Stress, psi		6.919	13.9	27.78	
Shear Strength, psi		17.73	19.98	27.17	
Strain at Failure, %		15	15	14.3	
Strain Rate, %/min		0.02	0.02	0.02	
B-Value		0.95	0.95	0.95	
Estimated Specific Gravity		2.7	2.7	2.7	
Liquid Limit		29	29	29	
Plastic Limit		16	16	16	

GeoTesting express

Project: New Bridge
Location: Anywhere, NJ
Project No.: GTX-1705
Boring No.: B16
Sample Type: Tube
Description: Moist, olive gray sandy clay
Remarks: ---

Phase calculations based on start and end of test.

GeoTesting
express
a subsidiary of Geocomp Corporation

Client:	ABC Company		
Project Name:	Landfill A		
Project Location:	Anywhere, USA		
GTX #:	4000	Tested By:	gtt
Test Date:	01/01/01	Checked By:	jdt
Sample ID:	Roll 1		
Description:	Black 40 mil textured HDPE		

Initial Tear Resistance of Plastic Film and Sheeting by ASTM D 1004

constant rate of extension (CRE) tensile testing machine

Specimen Number	Machine Direction		Cross Machine Direction	
	Thickness, mil	Tear Resistance, lb	Thickness, mil	Tear Resistance, lb
1	41.1	36	39.9	41
2	40.3	37	41.6	36
3	40.5	38	42.0	41
4	41.1	37	41.1	40
5	40.0	40	41.7	45
6	39.9	41	41.9	43
7	41.6	37	40.9	42
8	40.4	37	40.3	44
9	40.1	40	40.0	41
10	40.0	41	41.1	40
Average	40.5	38	41.1	41
Standard Deviation	0.58	1.9	0.77	2.5

Comments:

Notes: These results apply only to the sample tested for the specific test conditions. The test procedures employed follow accepted industry practice and the indicated test method. GeoTesting Express has no specific knowledge as to conditioning, origin, sampling procedure or intended use of the material.

Form D 1004, version 1

GeoTesting
express
a subsidiary of Geocomp Corporation

Client:	ABC Company		
Project Name:	Landfill A		
Project Location:	Anywhere, USA		
GTX #:	4000	Tested By:	gtt
Test Date:	01/01/01	Checked By:	jdt
Sample ID:	Roll 1		
Description:	Black 6 oz non-woven geotextile		

Water Permeability of Geotextiles by Permittivity
ASTM D 4491 - Constant Head Test

Specimen Diameter, in:	2.2	Head on Geotextile, in:	2.0
Effective Diameter of Geotextile, in:	2	Head on Geotextile, cm:	4.3
Effective Area of Geotextile, in2:	3.14		

Reading #	Permittivity, sec^{-1}			
	A	B	C	D
1	1.067	1.216	1.396	1.311
2	0.980	1.222	1.373	1.362
3	1.003	1.217	1.422	1.324
4	0.951	1.186	1.405	1.382
5	1.062	1.188	1.365	1.390
Average	1.013	1.206	1.392	1.354
Standard Deviation	0.051	0.017	0.023	0.035
Coefficient of Variation, %	5.041	1.439	1.680	2.587

Average Permittivity =	1.241	sec^{-1}	Average Permeability =	0.510	cm/sec
Standard Deviation =	0.172		Average Flow Rate =	722	$gal/min/ft^2$
Coefficient of Variation =	13.88	%			

Comments:

Notes: These results apply only to the sample tested for the specific test conditions. The test procedures employed follow accepted industry practice and the indicated test method. GeoTesting Express has no specific knowledge as to conditioning, origin, sampling procedure or intended use of the material.

Form D4491, version 1

4.14 Internal Audits

Internal quality audits are performed once per year to verify if quality activities and related results comply with requirements set forth in ISO/IEC Guide 17025-2005. The Quality Manager and or Director of Testing Services perform these audits.

The Quality Audit includes an examination of the following areas of GTX's Quality System:

- Quality Manual
- Corrective Action Summary List during the past year
- Review of previous year's corrective actions and effectiveness
- External Audits performed during the past year
- Customer complaints from the past year
- Equipment problems
- Organizational structure of the laboratory
- Results of proficiency tests during the past year
- Review of controlled documents
- Results of customer surveys
- Any other quality issue

Results of quality audits are recorded and reviewed with GTX management. Corrective actions are taken if necessary. Corrective actions are followed-up to verify implementation and effectiveness. The actions taken are documented. Results of quality audits are maintained by the Laboratory Manager in the Laboratory Manager's office.

If deficiencies are determined by customer complaints, peer review and/or external audits, an increase in internal quality audits will occur. These increased internal quality audits will be in place until deficiencies are rectified.

4.15 Management Review

Annual management review of the quality system is performed and attended by the Director of Testing Services, Quality Manager and Laboratory Manager. Topics covered during this meeting include:

- Quality system changes
- Internal and external audit deficiencies
- Client complaints
- Corrective action review
- Preventative action
- Proficiency test results
- Recommendations for improvement
- Resource (personnel and equipment) needs

A copy of the minutes from the management review are provided to the Chief Engineer. Records of management review are maintained and kept in the Laboratory Manager's office.

5.0 TECHNICAL REQUIREMENT

5.1 General

Many factors determine the correctness and reliability of the tests and/or calibrations performed by a laboratory. These factors include contributions from:

- Human factors
- Accommodation and environmental conditions
- Test and calibration methods and method validation
- Equipment
- Measurement traceability
- Sampling
- The handling of test and calibration items

The extent to which the factors contribute to the total uncertainty of measurement differs considerably between (type of) tests and between (types of) calibrations. GTX takes account of these factors by way of internal reference materials (IRMs) and verification checks to verify that equipment is functioning properly prior to testing. An IRM or gauge standard (e.g. calibrated weight, gauge block) is assigned to each piece of equipment.

IRMs are traceable and have known values. Verification checks the critical dimensions and functionality of equipment. The frequency at which these reference checks and verifications are performed varies depending upon the piece of equipment, volume of testing performed with that equipment and likelihood of that piece of equipment to yield results which stray from accepted ranges. Reference and verification checks are recorded in the Laboratory Equipment Calibration Log. Reference checks can be performed by laboratory technicians or management. The Laboratory Manager maintains a list of testing equipment giving details of IRMs, verifications and calibrations for test equipment in the laboratory.

If, after performing a reference check or verification, a piece of equipment is found to be yielding unacceptable results, the Laboratory Manager is consulted and a calibration check is performed. If this does not resolve the problem, the Quality Manager or Director of Testing Services is consulted and a new course of action is determined. Actions taken to resolve the problem include: checking to determine if any previous test results may be affected and documenting corrective actions.

5.2 Personnel

Personnel of GTX have met minimum requirements of education and technical knowledge. Each employee has demonstrated an ability and willingness to work in a laboratory environment. Each employee undergoes a training period during which constant supervision is maintained while teaching and performing a specific test. After demonstrating that he/she is able to perform a test with an adequate level of competence, that employee is considered proficient enough to perform the test without constant supervision. Verbal or written tests are given to technicians who have not received prior formal training in testing procedures.

The Laboratory Manager and Quality Control Technician are responsible for the training program and maintenance of training records. This includes initial proficiency and yearly renewals. Making available and scheduling external training such as ACI, MCIB, NICET, OSHA 40 hour safety and Troxler radiation safety is the responsibility of the Laboratory Manager and Quality Control Technician.

Technician proficiency records are maintained for each technician. These records show tests for which a particular technician has been deemed proficient, date of proficiency, trainer and date for renewal. Training Records (initial proficiency and yearly renewals) are stored in the Lab Manager's office.

Renewals are performed once a year. The Laboratory Manager, Quality Control Technician or Quality Manager conducts the yearly renewals for all technicians. The renewal procedure includes both a verbal question/answer session for a particular test and a practical performance of the test in the presence of the Laboratory Manager, Quality Control Technician or Quality Manager. A sample Technician Training Record chart is shown on the next page.

Descriptions of the levels of training required for becoming a Laboratory Technician Trainee, Laboratory Technician I, II, III, IV and/or Field Technician are presented in Section 4.1.4. NICET, ACI and OSHA testing and evaluation in addition to proficiency achieved as documented in training records are used to determine when a level has been reached.

The technician, Laboratory Manager and Quality Control Technician are responsible for keeping training proficiencies up to date and current. They are also responsible for signing off (verifying) the training records of each technician. The Laboratory Manager and Quality Control Technician maintain training records/charts. A technician may perform production work only for those tests which he/she has been determined to be proficient.

GeoTesting Express Training Record

Employee Name:	
Position:	
Date of Hire:	
Education:	
Training:	

			Initial Proficiency			Renewal		
Material	**Std. #**	**Test Name**	**Date**	**Trained By**	**OK**	**Date/Initial**	**Date/Initial**	**Date/Initial**
		SOIL						
S	ASTM D 4318	Atterberg Limits						
S	AASHTO T 89	Liquid Limit of Soils						
S	AASHTO T 90	Plastic Limit of Soils						
S	ASTM D 3042	Calcium Carbonate Content						
S	ASTM D 4373	Calcium Carbonate Content						
S	ASTM D 1883	California Bearing Ratio						
S	ASSHTO T 193	California Bearing Ratio						
S	ASTM D 3152	Capillary-Moisture Relationship - fine grained						
S	ASTM D 2325	Capillary-Moisture Relationship - coarse grained						
S	ASTM D 5333	Colapse Potential of Soils						
S	USACOE EM1110	Column Settling						
S	---	Compact Sample for Testing						
S	USACOE EM1110	Consolidated, Drained (CD) Triaxial Shear						
S	ASTM D 4767	Consolidated, Undrained (CU) Triaxial Shear						
S	AASHTO T 297	Consolidated, Undrained (CU) Triaxial Shear						
S	ASTM D 4186	Constant Rate of Strain Consolidation						
S	ASTM D 5311	Cyclic Triaxial - Load Controlled						
S	ASTM D 3999	Cyclic Triaxial - Modulus and Damping						
S	---	Cyclic Direct Simple Shear						
S	ASTM D 2937	Density (drive cylinder)						
S	ASTM D 3080	Direct Shear - clay, up to 12" x 12"						
S	AASHTO T 236	Direct Shear - clay, up to 12" x 12"						
S	ASTM D 3080	Direct Shear - sand, up to 12" x 12"						
S	AASHTO T 236	Direct Shear - sand, up to 12" x 12"						
S	ASTM D 3080	Direct Shear - large scale, up to 12" x 12"						
S	AASHTO T 236	Direct Shear - large scale, up to 12" x 12"						

5.3 Accommodation and Environmental Conditions

In most cases, samples obtained from various clients are not under the control of GTX laboratory personnel, therefore responsibility for proper shipment is the client's. Once arriving at GTX, samples are visually inspected and the condition of samples is recorded. A determination is made regarding proper storage techniques for the samples and appropriate actions are taken.

After samples are logged in, samples are stored in the current work storage area. Samples are typically stored in the container they arrived to the laboratory in. Only those technicians who are assigned to perform work on a sample will take the sample from the current work storage area. Until all work for the sample is performed, the sample is stored in this area.

The geosynthetics laboratory atmosphere is controlled for temperature and somewhat controlled for relative humidity. Sample preparation, conditioning and testing is performed in this controlled area. The temperature and relative humidity is monitored and logged each day that geosynthetics testing is performed in the Geosynthetics Laboratory Atmosphere Log Book.

An atmosphere criteria table is posted in the geosynthetics laboratory which states the upper and lower limits for each geosynthetics test as per the applicable standard. It also warns that testing should be halted if the temperature in the laboratory becomes out of control. If the relative humidity becomes out of control, it should be noted in the comment section of the laboratory test sheet, however testing may continue.

Access to and use of areas affecting the quality of testing activities is controlled. Visitors entering the laboratory meet with a supervisor and, if other than a sample drop-off is being conducted, shall sign in at the front desk with the receptionist.

5.4 Test and Calibration Methods and Method Validation

5.4.1 General

GTX uses appropriate methods and procedures for all testing and calibrations performed. Sampling, handling, transporting, storing and preparing test samples are conducted in accordance with established procedures.

If a condition exists which will hinder GTX from performing tests in accordance to published standards, the client is notified. If the condition of the samples is such that damage has occurred during shipment the client is notified. In addition, the client is notified if a discrepancy in sample identification exists. Unsuitable conditions or discrepancies in customer supplied samples are noted and recorded in the project file. Any discrepancies will be resolved to the satisfaction of the client with a mutually acceptable course of action. Quality control of test procedures is continuously monitored by technicians performing tests as well as supervisor(s) and the Quality Control Technician. These inspections occur before, during and

after testing. Each technician documents procedural deviations in the comment section of the laboratory work sheet or appropriate LIMS entry field.

GTX performs tests according to test standards found in ASTM, AASHTO, EPA, the USA COE and other published test standards. Deviations from stated test methods are noted on the test report. The test standards are located in the Laboratory Manager's office. Technicians have access to these standards. To assist technicians, GTX Standard Operating Procedures are also accessible.

Samples are conditioned according to the appropriate test standard. These conditions include environmental considerations such as temperature and humidity. Client's requests supersede this requirement, and shorter conditioning times may be employed.

GTX maintains a file containing equipment instructions which is available to technicians as appropriate.

5.4.2 Selection of Methods

GTX utilizes test methods which meet the client's request and are appropriate for the test. Except where otherwise requested by the client, GTX uses the latest revision of a test standard. If the client does not specify a method, GTX will suggest to the client an appropriate published method or, as a last alternative, a laboratory-developed method. In either case, the client is notified and agrees to the suggested method prior to commencing testing. In addition, if the client specifies a test that is out of date or otherwise inappropriate, GTX will notify that client and provide viable alternatives.

5.4.3 Laboratory-developed Methods

GTX will occasionally develop in-house procedures for testing and calibration. Development of these procedures is a planned activity and is only conducted by qualified personnel with appropriate equipment. Laboratory management is involved in the process during development of procedures and maintains close contact with personnel conducting the development.

5.4.4 Non-standard Methods

When conducting tests not covered by standard methods, the client must agree on the standard.

5.4.5 Validation of Methods

When conducting tests not covered by standard methods, GTX will validate the methods to confirm that they are fit for the intended use. The results, procedure used and a statement as to the soundness of the test for the intended use are obtained are recorded.

GTX conducts its own calibration/verification on many pieces of equipment. In addition, it contracts an outside agency to conduct calibration/verification on several pieces of equipment. Several pieces of reference equipment (weights, gauge blocks, pressure gauge, etc.) are sent out to an external NIST

traceable lab for calibration. This calibrated equipment is then used to internally calibrate equipment such as dies, scales and gauges according to GTX's calibration schedule.

5.4.6 Estimation of Uncertainty of Measurement

GTX has developed a procedure to estimate uncertainty in measurements made on different types of equipment.

5.4.7 Control of Data

Computers used to collect data for testing are checked prior to being placed into service for testing. This is performed by the Laboratory Manager, Quality Manager, Quality Control Technician or the GTX software engineer. Software used to collect data is documented. Software used for testing is checked for accuracy prior to being used in the laboratory and then periodically thereafter. Records of computer and software checks are maintained by the Laboratory Manager.

When data is collected, it is saved to a file on the computer's hard drive with a unique name. At the completion of testing, this file is copied from the hard drive to the project's directory on the GTX server. The GTX server is backed up on a weekly basis.

5.5 Equipment

An inventory list of sampling, testing, and calibration and verification equipment is maintained and located in the Laboratory Manager's Office. This inventory list contains the following information:

- Description
- Associated System
- Manufacturer
- Quantity
- Model #
- Serial #
- Location
- Date Received
- Date in Service
- Date Out of Service
- Condition When Received

Laboratory personnel are responsible for verifying the following prior to performing tests:

- Equipment is in working order
- Equipment maintenance records are kept and up to date
- Equipment is calibrated per requirements

- The calibrated equipment to be used is accurate for the range needed for the test
- Calibration records are current

Calibration of laboratory equipment is performed internally by the use of basic calibration instruments which are traceable to NIST standards. Some pieces of equipment are sent out for external calibrations. Certificates of traceability for these instruments are located in the Laboratory Equipment Calibration Log kept in the Laboratory Manager's office. External agencies provide GTX with information regarding any out of ordinary condition of equipment including if the equipment is out of tolerance. This approach permits internal calibration and periodic checks by trained personnel. Equipment is marked with calibration labels with at least the following information: calibration agency, calibration date, and due date for next calibration. Calibration certificates and records are kept in the Laboratory Equipment Calibration Log. Calibration and/or verification procedures are located in the Laboratory Manager's office. Only personnel trained to conduct calibrations are allowed to do so. Table 1 summarizes the frequency and requirement for test equipment calibration and verification.

Table 1. Laboratory Equipment Calibration and Verification Requirements

Equipment	Test Method	Requirement	Calibration/Verification Procedure	Location of Records	Interval, months
Mechanical Shakers	ASTM D 422, C 136, D4718	Check sieving thoroughness	GTX-3	Lab Manager's Office	12
Balances, Scales & Weights	Various	Verify Calibrate	GTX-1	Lab Manager's Office	3 12
Compression or Loading Device	ASTM D 1883, D 2166, D 2435, D 2850, D 3080, D 4767	Verify load cells Calibrate load cells Verify LVDTs Calibrate LVDTs Verify load frame	GTX-11 GTX-11 GTX-11 GTX-11 GTX-36	Lab Manager's Office	3 12 3 12 3
Tensile Load Device	ASTM D 638, D 1004, D 413, D 4437, D 6392, D 4533, D 4595, D 4632, D 4833, D 4884, D 4885, D 5321, D 6243, FTMS 101C-2065	Verify load cells Calibrate load cells Verify load frame	GTX-11 GTX-11 GTX-36	Lab Manager's Office	3 12 3
Dial Indicators	ASTM D 1883	Verify	External agency	Lab Manager's Office	3
Mechanical Compactor	ASTM D 1883, D 698, D 1557	Calibrate	GTX-34	Lab Manager's Office	12
Ovens	ASTM D 2216, D 1204, various	Verify	GTX-12	Lab Manager's Office	3
Vacuum System	ASTM D 854, various	Check pressure	GTX-8	Lab Manager's Office	12
Molds	ASTM D 698, D 558, D 559, D 560, D 1557, D 1883	Check critical dimensions	GTX-5	Lab Manager's Office	12
Unit Weight Measures	AASHTO T 19/ASTM C 29	Calibrate	GTX-18	Lab Manager's Office	12
Manual Hammer	ASTM D 698, D 1557, D 1883	Check weight and critical dimensions	GTX-7	Lab Manager's Office	12
Sieves	ASTM D 422, various	Check physical condition	GTX-2	Lab Manager's Office	6
Liquid Limit Device	ASTM D 4318	Check wear and critical dimensions	GTX-13	Lab Manager's Office	12
Grooving Tool	ASTM D 4318	Check critical dimensions	GTX-13	Lab Manager's Office	12
Hydrometers	ASTM D 422	Check critical dimensions	GTX-14	Lab Manager's Office	12
Straightedge	ASTM D 698, D 558, D	Check planeness of edge	GTX-6	Lab Manager's Office	6

	560, D 1557, D 1883				
CBR Annular and Slotted Weights	ASTM D 1883	Check weight	GTX-9	Lab Manager's Office	12
CBR Penetration Piston	ASTM D 1883	Check diameter	GTX-10	Lab Manager's Office	12
Sulfate Oven	ASTM C 88	Ck. Rate of evaporation	GTX-29	Lab Manager's Office	12
L.A. Machine	ASTM C 131	Check Individual wt. & Charge wt.	GTX-20	Lab Manager's Office	24
Conical Mold and Tamper	ASTM C 128	Check critical dimensions	GTX-26	Lab Manager's Office	24
Sulfate Soundness Sample Containers	ASTM C 88	Check physical condition	GTX-23	Lab Manager's Office	12
Permittivity Device	ASTM D 4491	Verify #200 screen	ASTM D 4491	Lab Manager's Office	12
Digital Calipers	various	Verify caliper	GTX-21 or External agency	Lab Manager's Office	12
Thermometers	various	Verify thermometer	GTX-25	Lab Manager's Office	6
Thickness Micrometer	ASTM D 1777, D 751, D 5199, D 5994, GRI GM12	Verify micrometer	External agency	Lab Manager's Office	3
Weighted Foot Assemblies	ASTM D 2419	Check weight	GTX-31	Lab Manager's Office	12

With the use of GTX's LIMS, calibration/verification due dates are tracked and the specific tasks (calibrations or verifications) for equipment are assigned to technicians. In this way, the calibrations and verifications are completed by the required dates. The person responsible for making sure calibrations and verifications are performed is the Quality Control Technician. The MA laboratory's Quality Control Technician is Nancy Hubbard. The GA laboratory's Quality Control Technician is Lois Schwarz.

Documentation is kept on each piece of testing equipment. A "Maintenance and Calibration Record" log is maintained by the Laboratory Manager and contains the following information:

- Name of test equipment
- Manufacturer's name
- Type of equipment
- Identification (model number and serial number)
- Dates of calibration and results
- Damage, malfunctions or maintenance performed on equipment
- As found and as left condition if out of ordinary

Either Internal reference materials (IRMs) or verification procedures exist for each piece of testing equipment. IRM and verification records are maintained for each piece of testing equipment.

A copy of the manufacturer's instruction manual is kept for each piece of equipment. These are located in a marked file in the testing laboratory.

The following are general control procedures for maintaining properly calibrated testing equipment:

- Newly acquired equipment without manufacturer's certification is calibrated before being placed into service.
- Prior to testing, the measurements to be made are determined and, depending upon the range, accuracy and precision required, the proper testing equipment is utilized to perform the test.

- Testing equipment and measuring devices are calibrated at regular intervals and checked at various times prior to testing. Calibrations are logged in the Laboratory Equipment Calibration Log. These calibrations are made against internationally know standards when possible. Outside agencies are contracted to perform periodic calibrations.
- Calibrations of equipment and measuring devices are performed to optimize the accuracy of the range in which testing is required. Details of calibration results are located in the Laboratory Equipment Log. These include: equipment name, type and unique identification, locations, frequency of calibration checks, the method of calibration and acceptance criteria. When a calibration or check finds a piece of equipment to be out of control, it is brought to the attention of the Laboratory Manager and a course of action is determined.
- Test equipment is marked with a label depicting identification number and calibration date.
- Records of calibration are kept in the Laboratory Equipment Calibration Log. This log is stored in the Laboratory Manager's office.
- If a piece of equipment is out of control, part of the actions taken include evaluating previous inspections to determine when the equipment became out of control and what effect it has had on previous test results. Clients are notified if previous test results were determined to be adversely affected. The piece of equipment is taken out of service and clearly labeled until repaired or corrected.
- Equipment that has been removed from service shall be verified or calibrated prior to being placed into service again.
- The laboratory atmosphere is kept at the accepted temperature and humidity for testing and is maintained at those conditions during calibrations and checking.
- Test equipment is handled and stored with care, minimizing any activity which may cause calibrations to become invalid. When not in use, equipment is stored in a clean area and typically covered or placed in a closed container.
- Calibrations are saved and stored in computer files which are uniquely named. They are also stored in the Laboratory Equipment Calibration Log and are checked against one another prior to running tests.

5.6 Measurement Traceability

Sample Receipt

When samples enter the laboratory, a determination is made by the person accepting them: the samples are either part of an existing project or they are part of a new project. If the samples are part of a new project, the Project Log-In Clerk proceeds to create a project folder and assigns a GTX Project Number to that project. The Project Number is simply a number incremented by 1 for each new project. This is performed utilizing GTX's Laboratory Information Management System (LIMS). Information such as client name, address, phone and fax numbers, contact, project name, and project location are logged in with the project. A white project information sticker is produced and placed on the cover of the project folder for quick reference.

Located on the project folder is a checklist with the following information:

- Contract, PO, Quote, etc.
- Inspection of Customer Supplied Product
- Client Contacted
- Data Sheets
- Final Report
- Invoice (s)
- Project Description

This checklist is a guide which assists in performing each task as well as a guide to confirm that the project file is complete.

Sample Log-In

After receiving a new project folder or determining that samples received are part of an existing project, the samples are logged-in. In the LIMS, the function "Samples" enables logging-in and test assignment. The following is a step-by-step log in procedure:

1) Conduct a search for the GTX Project Number the samples correspond to
2) In the "sample #" field, enter the sample number or numbers if more than one (only one sample number is allowed per line)
3) Enter the date received and date results are due in the appropriate fields
4) With a mouse, double click the sample #
5) This new field allows entering each test required for this specific sample, assigning which technician will perform the test, entering any specific special instructions for each test, and the price of the test
6) When finished, click "close"
7) Finally, generate a sample sticker by clicking the box next to the sample name with the mouse to create an "x", switch the printer selector switch to "B", then press "Print Labels"
8) Labels will print (see example below)

Testing

The samples are now logged in. A technician is assigned to perform each test required. GTX uses the same sample names which our clients use. Each sample identification sticker contains information related to that sample and project. This sticker is placed on the corresponding sample container. An example of GTX's sample identification sticker is shown below.

GTX #: 6566 Sample #: 4B Boring:B14 Depth:4.8-5.7
Customer: Geocomp Consulting
Project Name: XXXXXXXXX
Project Location: XXXXXXXXX
Date In: 3/20/2006 Date Due:4/28/2006 Label 1 of 4

GTX-S1044 - X-Ray Shelby Tube	Sub
ASTM D 4186 - CRC Consolidation	njh
ASTM D 6528 - Direct Simple Shear (1 normal stress)	njh
ASTM D 6528 - Direct Simple Shear (1 normal stress)	njh

SAMP-39863

Specimens taken from samples are placed into sealed containers such as zip-loc bags, buckets, jars, etc. This container is then labeled with a sticker or a marker.

Archive and Disposal

After testing is complete for a particular sample, the sample and any specimens originating from the sample are placed into one of the holding bins for completed work. These holding bins are set up to hold samples for sixty to ninety days. If there is a request for further testing or re-testing during this period, GTX can honor the request because the sample is in the holding bin. At the end of the holding period, the samples are either:

- Discarded
- Returned to client (if requested)
- Returned to client (if hazardous) for disposal on site
- Treated as outlined in USDA Foreign Soil Permit and discarded

5.7 Sampling

Samples are typically brought to the laboratory for testing by our clients (either hand-delivered or shipped via courier). Samples are conditioned as per the test standard or at the client's request. Specimens are taken from samples per the test standard.

Reference the Geosynthetic Test Standard Operating Procedures book for specific instruction on sampling geosynthetics.

5.8 Handling of Test Calibration Items

Incoming Sample Inspection

After entering the laboratory and before testing, samples shipped (commercial courier, delivered by client, or picked up by a GTX employee) to GTX are visually inspected. This inspection consists of the following:

- Physical condition of the samples
  - Scratches, creases, holes or any other defects for geosynthetics
  - Broken sample containers (such as glass, etc.), condition of undisturbed materials
- Identification numbers are checked for accuracy
- The shipment is checked for completeness (all samples are included)
- Identification of client name, project name, etc. and other pertinent information unique to a project

Performance of the inspection is documented on the project folder checklist. The client is notified if any deficiencies or problems are found during this inspection. Communication between GTX and the client is documented on the project folder checklist.

5.9 Assuring the Quality of Test and Calibration Results

Proficiency Testing

GTX participates in several proficiency testing programs. These programs help control and maintain that laboratory personnel are performing tests properly. GTX participates in the following proficiency testing programs:

ASTM/ISR	American Society for Testing and Materials/Institute for Standards Research (soils)
GAI-LAP	Geosynthetic Accreditation Institute - Laboratory Accreditation Program (geosynthetics)
AMRL	AASHTO (American Association of State Highway and Transportation Officials) Materials Reference Laboratory (soils & aggregate)
CCRL	AASHTO (American Association of State Highway and Transportation Officials) Cement and Concrete Reference Laboratory (concrete)

These programs give GTX the means to check quality of work whenever a question is raised. If results are outside the control limits (usually 2 standard deviations from the average) the following procedures are followed:

1) Determine if the agency conducting the program corrected reported results
2) Determine if the test result submitted was properly taken from laboratory data
3) Determine if the calculations of the results were correct
4) Determine if the equipment used to perform the test is in control
5) Determine if the procedures used to perform the test are in accordance with test standards
6) Take corrective action to repair or replace defective equipment or inform the technician of proper technique to follow
7) Document corrective actions in accordance with section 11.0 Corrective Actions

GTX retains results of participation in proficiency programs including: data sheets, reports, results, and documentation describing steps taken to determine the cause of poor test results and any corrective actions taken.

On-Site Inspection Programs

GTX participates in various on-site inspection programs, namely: AASHTO-AMRL, AASHTO-CCRL, GAI and US Army Corps of Engineers. Three aspects of the laboratory are checked during these inspections: equipment, procedures, and the quality system. GTX may also undergo project-specific quality audits conducted by its clients. The scope of these audits is project-specific.

If deficiencies are found the following steps are taken:

- Equipment is replaced or repaired
- Correct procedures are discussed and reviewed with the technician; the technician is observed performing the test properly
- The Laboratory Manager reviews deficiencies in the Quality Manual with responsible individuals; corrections are made

Corrective actions are documented and maintained by the Laboratory Manager in the Laboratory Manager's office. Results of on-site inspections are maintained by the Laboratory Manager in the Laboratory Manager's office.

GTX currently holds the following Accreditations/Validations:

Agency	Type	Valid Through	
		GTX-MA	GTX-GA
AMRL-AASHTO	Accreditation	12/2010	6/2009
CCRL-AASHTO	Accreditation	12/2010	---
GAI-LAP	Accreditation	06/30/2009	---
USACOE	Validation	11/14/2008 extended to 05/13/2009	08/29/2009

Use of Internal Reference Materials (IRMs) helps GTX assure the quality of its work.

5.10 Reporting the Results

Test reports are created from test data obtained from technicians. Technicians use laboratory work sheets or the LIMS to document and check their work. Lab work sheets are initialed by technicians prior to submitting for review. Laboratory work sheets and the LIMS are designed to minimize errors in performing and reporting the test results. Comment sections of the laboratory work sheets and LIMS are used by technicians to record deviations from applicable test standards, problems arising during the performance of the test, etc. Once checked, the Laboratory Manager initials the laboratory work sheet.

The Laboratory Manager, Branch Manager or Director of Testing Services generally checks and approves most test reports before being shipped to the client. If it is impossible for the Laboratory Manager, Branch Manager or Director of Testing Services to check and approve the report, the Chief Engineer will approve the report. The test report denotes who performed the test and who checked the test/report. Reports have a comment section on them which communicates to the client any deviation from the test standard, problems, observations, etc. Reports are dated and signed by any of the following: Laboratory Manager, Branch Manager, Director of Testing Services or the Chief Engineer.

If corrections are required, they are made and the report is checked again. In the event an incorrect report goes to a client, a new and corrected report is supplied to the client and a corrective action report is completed. Both the corrected report and the original report are retained in the project file.

Test report sheets and laboratory work sheets are placed into the project file for the appropriate project. A project file is a collection of color coded folders which represent separate components of the file. The folder which contains all of the sub folders is green. This green folder has a sticker on the outside with pertinent project information such as:

- GTX project #
- Client name, address, contacts, phone and fax numbers, E-mail addresses
- Project name and location
- Special reporting instructions
- Disposal method

The blue folder contains all laboratory work sheets and calculations (hand and computer generated). The yellow folder contains all background project information, pricing, correspondence, records of communication, etc. The orange folder contains all computer generated test report sheets and reports.

Active project files are stored in a file cabinet in the Laboratory Manager's office. Technicians have access to these files for information they may need to perform tests.

Each project file has the unique GTX project number located at the top to distinguish it from other files.

In addition, each file has a white label on the front to relay pertinent project information.

All test results produced by GTX are submitted to the client in the form of a test report. A test report consists of one or several test report sheets, a written letter and a transmittal page. At a minimum, the test report satisfies the conditions and instructions outlined in test methods and contract with the client. In addition, the report contains the following as per the requirements of ISO/IEC Guide 17025:

- Title of "Test Report"
- Name and address of laboratory
- Unique identification of the report (GTX project number)
- Name and address of client, and name of contact at client firm
- Identification and description of samples tested
- Characterization of condition of test sample
- Date test samples were received in laboratory and date tests were performed
- Identification of test methods used (or any deviations from)
- Reference to sampling procedures
- Test results supported by tables, graphs, sketches, etc which support test results
- Signature of Laboratory Manager who accepts responsibility for the content of the report and date report issued
- Statement declaring test results relate only to the samples tested
- Statement that the report shall not be reproduced except in full, without the written approval of the laboratory

It should be noted that GTX may alter the format of reports but not content to satisfy specific requests of clients.

Test reports have unique dates and number identification to segregate them from other reports. Copies of reports sent to clients are stored in the project file. When a project is completed, the project file is stored in the GTX archives, sorted by the unique GTX project number.

Most test reports are faxed to the client upon passing the internal quality check. All test reports are shipped to the client in a bound, signed report. Reports can be shipped using conventional couriers, US postal service, hand delivery, or picked up by the client.

All documents, data, calculations and work papers prepared or furnished by GTX are instruments of service and will remain GTX's property. Reports, data and other work product delivered to or on behalf of the client are for the client's use only for the limited purposes disclosed to GTX. GTX does not disclose results contained in any report produced for the client or provided by the client without the consent of the client. GTX treats test results, data and reports prepared by GTX as proprietary and confidential. These are only disclosed to a third party with written authorization from the client. If GTX wishes to use test data for purposes other than reporting to a client, it sanitizes the data by removing client names, project names, etc.

Designation: D 422 – 63 (Reapproved 2007)

Standard Test Method for Particle-Size Analysis of Soils[1]

This standard is issued under the fixed designation D 422; the number immediately following the designation indicates the year of original adoption or, in the case of revision, the year of last revision. A number in parentheses indicates the year of last reapproval. A superscript epsilon (ϵ) indicates an editorial change since the last revision or reapproval.

1. Scope

1.1 This test method covers the quantitative determination of the distribution of particle sizes in soils. The distribution of particle sizes larger than 75 µm (retained on the No. 200 sieve) is determined by sieving, while the distribution of particle sizes smaller than 75 µm is determined by a sedimentation process, using a hydrometer to secure the necessary data (Note 1 and Note 2).

NOTE 1—Separation may be made on the No. 4 (4.75-mm), No. 40 (425-µm), or No. 200 (75-µm) sieve instead of the No. 10. For whatever sieve used, the size shall be indicated in the report.

NOTE 2—Two types of dispersion devices are provided: (*1*) a high-speed mechanical stirrer, and (*2*) air dispersion. Extensive investigations indicate that air-dispersion devices produce a more positive dispersion of plastic soils below the 20-µm size and appreciably less degradation on all sizes when used with sandy soils. Because of the definite advantages favoring air dispersion, its use is recommended. The results from the two types of devices differ in magnitude, depending upon soil type, leading to marked differences in particle size distribution, especially for sizes finer than 20 µm.

2. Referenced Documents

2.1 *ASTM Standards:* [2]

D 421 Practice for Dry Preparation of Soil Samples for Particle-Size Analysis and Determination of Soil Constants

E 11 Specification for Wire Cloth and Sieves for Testing Purposes

E 100 Specification for ASTM Hydrometers

2.2 *ASTM Adjuncts:*

Air-Jet Dispersion Cup for Grain-Size Analysis of Soil[3]

3. Apparatus

3.1 *Balances*—A balance sensitive to 0.01 g for weighing the material passing a No. 10 (2.00-mm) sieve, and a balance sensitive to 0.1 % of the mass of the sample to be weighed for weighing the material retained on a No. 10 sieve.

3.2 *Stirring Apparatus*—Either apparatus A or B may be used.

3.2.1 Apparatus A shall consist of a mechanically operated stirring device in which a suitably mounted electric motor turns a vertical shaft at a speed of not less than 10 000 rpm without load. The shaft shall be equipped with a replaceable stirring paddle made of metal, plastic, or hard rubber, as shown in Fig. 1. The shaft shall be of such length that the stirring paddle will operate not less than ¾ in. (19.0 mm) nor more than 1½ in. (38.1 mm) above the bottom of the dispersion cup. A special dispersion cup conforming to either of the designs shown in Fig. 2 shall be provided to hold the sample while it is being dispersed.

3.2.2 Apparatus B shall consist of an air-jet dispersion cup (See drawing[3]) (Note 3) conforming to the general details shown in Fig. 3 (Note 4 and Note 5).

NOTE 3—The amount of air required by an air-jet dispersion cup is of the order of 2 ft^3/min; some small air compressors are not capable of supplying sufficient air to operate a cup.

NOTE 4—Another air-type dispersion device, known as a dispersion tube, developed by Chu and Davidson at Iowa State College, has been shown to give results equivalent to those secured by the air-jet dispersion cups. When it is used, soaking of the sample can be done in the sedimentation cylinder, thus eliminating the need for transferring the slurry. When the air-dispersion tube is used, it shall be so indicated in the report.

NOTE 5—Water may condense in air lines when not in use. This water must be removed, either by using a water trap on the air line, or by blowing the water out of the line before using any of the air for dispersion purposes.

3.3 *Hydrometer*—An ASTM hydrometer, graduated to read in either specific gravity of the suspension or grams per litre of suspension, and conforming to the requirements for hydrometers 151H or 152H in Specifications E 100. Dimensions of both hydrometers are the same, the scale being the only item of difference.

[1] This test method is under the jurisdiction of ASTM Committee D18 on Soil and Rock and is the direct responsibility of Subcommittee D18.03 on Texture, Plasticity and Density Characteristics of Soils.

Current edition approved Oct. 15, 2007. Published October 2007. Originally approved in 1935. Last previous edition approved in 2002 as D 422 – 63 (2002)ϵ1.

[2] For referenced ASTM standards, visit the ASTM website, www.astm.org, or contact ASTM Customer Service at service@astm.org. For *Annual Book of ASTM Standards* volume information, refer to the standard's Document Summary page on the ASTM website.

[3] Available from ASTM International Headquarters. Order Adjunct No. ADJD0422.

Copyright © ASTM International, 100 Barr Harbor Drive, PO Box C700, West Conshohocken, PA 19428-2959, United States.

Copyright ASTM International

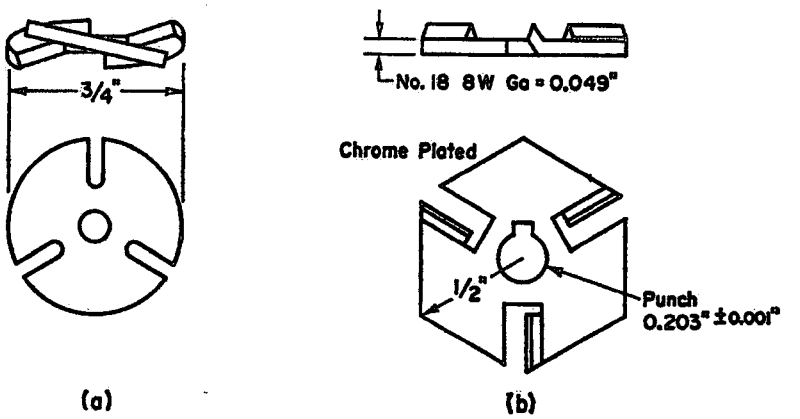

Metric Equivalents

in.	0.001	0.049	0.203	½	¾
mm	0.03	1.24	5.16	12.7	19.0

FIG. 1 Detail of Stirring Paddles

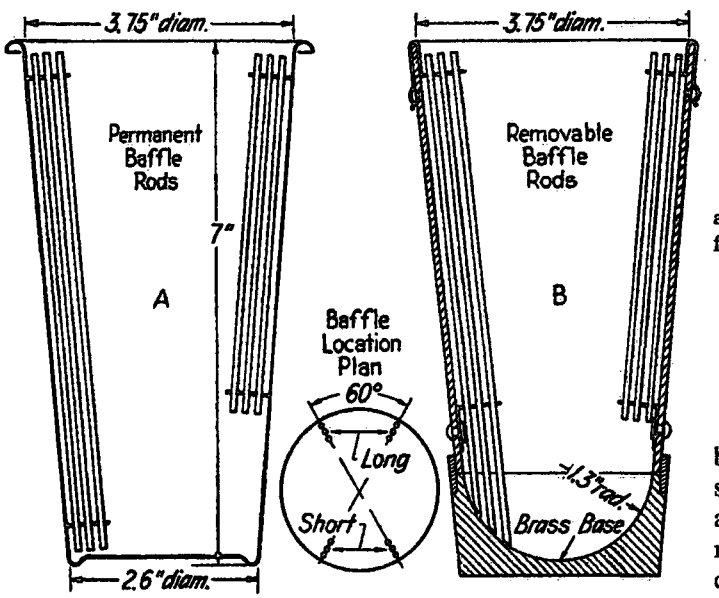

Metric Equivalents

in.	1.3	2.6	3.75
mm	33	66	95.2

FIG. 2 Dispersion Cups of Apparatus

3.4 *Sedimentation Cylinder*—A glass cylinder essentially 18 in. (457 mm) in height and 2½ in. (63.5 mm) in diameter, and marked for a volume of 1000 mL. The inside diameter shall be such that the 1000-mL mark is 36 ± 2 cm from the bottom on the inside.

3.5 *Thermometer*—A thermometer accurate to 1°F (0.5°C).

3.6 *Sieves*—A series of sieves, of square-mesh woven-wire cloth, conforming to the requirements of Specification E 11. A full set of sieves includes the following (Note 6):

3-in. (75-mm)	No. 10 (2.00-mm)
2-in. (50-mm)	No. 20 (850-µm)
1½-in. (37.5-mm)	No. 40 (425-µm)
1-in. (25.0-mm)	No. 60 (250-µm)
¾-in. (19.0-mm)	No. 140 (106-µm)
⅜-in. (9.5-mm)	No. 200 (75-µm)
No. 4 (4.75-mm)	

NOTE 6—A set of sieves giving uniform spacing of points for the graph, as required in Section 17, may be used if desired. This set consists of the following sieves:

3-in. (75-mm)	No. 16 (1.18-mm)
1½-in. (37.5-mm)	No. 30 (600-µm)
¾-in. (19.0-mm)	No. 50 (300-µm)
⅜-in. (9.5-mm)	No. 100 (150-µm)
No. 4 (4.75-mm)	No. 200 (75-µm)
No. 8 (2.36-mm)	

3.7 *Water Bath or Constant-Temperature Room*—A water bath or constant-temperature room for maintaining the soil suspension at a constant temperature during the hydrometer analysis. A satisfactory water tank is an insulated tank that maintains the temperature of the suspension at a convenient constant temperature at or near 68°F (20°C). Such a device is illustrated in Fig. 4. In cases where the work is performed in a room at an automatically controlled constant temperature, the water bath is not necessary.

3.8 *Beaker*—A beaker of 250-mL capacity.

3.9 *Timing Device*—A watch or clock with a second hand.

4. Dispersing Agent

4.1 A solution of sodium hexametaphosphate (sometimes called sodium metaphosphate) shall be used in distilled or demineralized water, at the rate of 40 g of sodium hexametaphosphate/litre of solution (Note 7).

NOTE 7—Solutions of this salt, if acidic, slowly revert or hydrolyze back to the orthophosphate form with a resultant decrease in dispersive action. Solutions should be prepared frequently (at least once a month) or adjusted to pH of 8 or 9 by means of sodium carbonate. Bottles containing

Copyright ASTM International

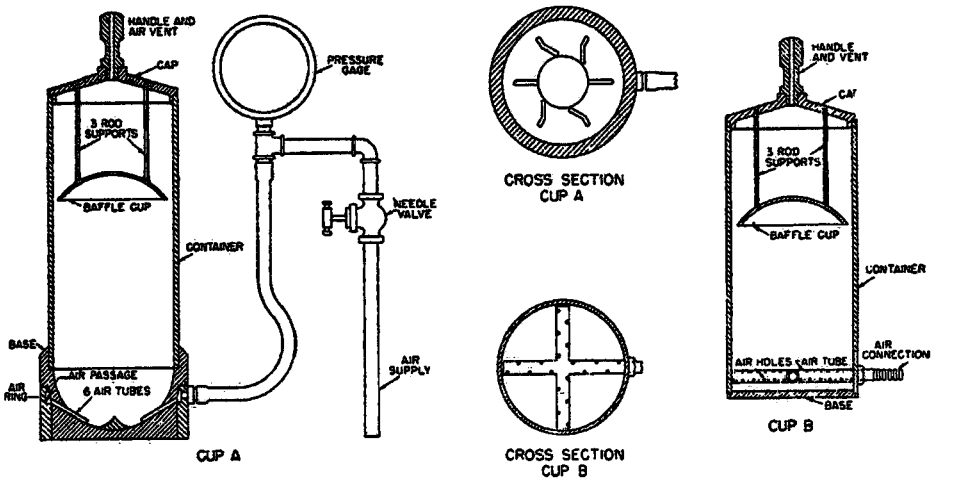

FIG. 3 Air-Jet Dispersion Cups of Apparatus B

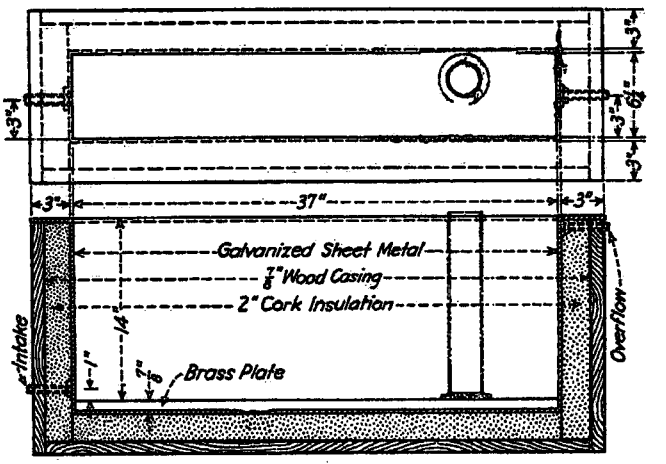

Metric Equivalents

in.	⅞	1	3	6¼	14	37
mm	22.2	25.4	76.2	158.2	356	940

FIG. 4 Insulated Water Bath

solutions should have the date of preparation marked on them.

4.2 All water used shall be either distilled or demineralized water. The water for a hydrometer test shall be brought to the temperature that is expected to prevail during the hydrometer test. For example, if the sedimentation cylinder is to be placed in the water bath, the distilled or demineralized water to be used shall be brought to the temperature of the controlled water bath; or, if the sedimentation cylinder is used in a room with controlled temperature, the water for the test shall be at the temperature of the room. The basic temperature for the hydrometer test is 68°F (20°C). Small variations of temperature do not introduce differences that are of practical significance and do not prevent the use of corrections derived as prescribed.

5. Test Sample

5.1 Prepare the test sample for mechanical analysis as outlined in Practice D 421. During the preparation procedure the sample is divided into two portions. One portion contains only particles retained on the No. 10 (2.00-mm) sieve while the other portion contains only particles passing the No. 10 sieve. The mass of air-dried soil selected for purpose of tests, as prescribed in Practice D 421, shall be sufficient to yield quantities for mechanical analysis as follows:

5.1.1 The size of the portion retained on the No. 10 sieve shall depend on the maximum size of particle, according to the following schedule:

Nominal Diameter of Largest Particles, in. (mm)	Approximate Minimum Mass of Portion, g
⅜ (9.5)	500
¾ (19.0)	1000
1 (25.4)	2000
1½ (38.1)	3000
2 (50.8)	4000
3 (76.2)	5000

5.1.2 The size of the portion passing the No. 10 sieve shall be approximately 115 g for sandy soils and approximately 65 g for silt and clay soils.

Copyright ASTM International

5.2 Provision is made in Section 5 of Practice D 421 for weighing of the air-dry soil selected for purpose of tests, the separation of the soil on the No. 10 sieve by dry-sieving and washing, and the weighing of the washed and dried fraction retained on the No. 10 sieve. From these two masses the percentages retained and passing the No. 10 sieve can be calculated in accordance with 12.1.

NOTE 8—A check on the mass values and the thoroughness of pulverization of the clods may be secured by weighing the portion passing the No. 10 sieve and adding this value to the mass of the washed and oven-dried portion retained on the No. 10 sieve.

SIEVE ANALYSIS OF PORTION RETAINED ON NO. 10 (2.00-mm) SIEVE

6. Procedure

6.1 Separate the portion retained on the No. 10 (2.00-mm) sieve into a series of fractions using the 3-in. (75-mm), 2-in. (50-mm), 1½-in. (37.5-mm), 1-in. (25.0-mm), ¾-in. (19.0-mm), ⅜-in. (9.5-mm), No. 4 (4.75-mm), and No. 10 sieves, or as many as may be needed depending on the sample, or upon the specifications for the material under test.

6.2 Conduct the sieving operation by means of a lateral and vertical motion of the sieve, accompanied by a jarring action in order to keep the sample moving continuously over the surface of the sieve. In no case turn or manipulate fragments in the sample through the sieve by hand. Continue sieving until not more than 1 mass % of the residue on a sieve passes that sieve during 1 min of sieving. When mechanical sieving is used, test the thoroughness of sieving by using the hand method of sieving as described above.

6.3 Determine the mass of each fraction on a balance conforming to the requirements of 3.1. At the end of weighing, the sum of the masses retained on all the sieves used should equal closely the original mass of the quantity sieved.

HYDROMETER AND SIEVE ANALYSIS OF PORTION PASSING THE NO. 10 (2.00-mm) SIEVE

7. Determination of Composite Correction for Hydrometer Reading

7.1 Equations for percentages of soil remaining in suspension, as given in 14.3, are based on the use of distilled or demineralized water. A dispersing agent is used in the water, however, and the specific gravity of the resulting liquid is appreciably greater than that of distilled or demineralized water.

7.1.1 Both soil hydrometers are calibrated at 68°F (20°C), and variations in temperature from this standard temperature produce inaccuracies in the actual hydrometer readings. The amount of the inaccuracy increases as the variation from the standard temperature increases.

7.1.2 Hydrometers are graduated by the manufacturer to be read at the bottom of the meniscus formed by the liquid on the stem. Since it is not possible to secure readings of soil suspensions at the bottom of the meniscus, readings must be taken at the top and a correction applied.

7.1.3 The net amount of the corrections for the three items enumerated is designated as the composite correction, and may be determined experimentally.

7.2 For convenience, a graph or table of composite corrections for a series of 1° temperature differences for the range of expected test temperatures may be prepared and used as needed. Measurement of the composite corrections may be made at two temperatures spanning the range of expected test temperatures, and corrections for the intermediate temperatures calculated assuming a straight-line relationship between the two observed values.

7.3 Prepare 1000 mL of liquid composed of distilled or demineralized water and dispersing agent in the same proportion as will prevail in the sedimentation (hydrometer) test. Place the liquid in a sedimentation cylinder and the cylinder in the constant-temperature water bath, set for one of the two temperatures to be used. When the temperature of the liquid becomes constant, insert the hydrometer, and, after a short interval to permit the hydrometer to come to the temperature of the liquid, read the hydrometer at the top of the meniscus formed on the stem. For hydrometer 151H the composite correction is the difference between this reading and one; for hydrometer 152H it is the difference between the reading and zero. Bring the liquid and the hydrometer to the other temperature to be used, and secure the composite correction as before.

8. Hygroscopic Moisture

8.1 When the sample is weighed for the hydrometer test, weigh out an auxiliary portion of from 10 to 15 g in a small metal or glass container, dry the sample to a constant mass in an oven at 230 ± 9°F (110 ± 5°C), and weigh again. Record the masses.

9. Dispersion of Soil Sample

9.1 When the soil is mostly of the clay and silt sizes, weigh out a sample of air-dry soil of approximately 50 g. When the soil is mostly sand the sample should be approximately 100 g.

9.2 Place the sample in the 250-mL beaker and cover with 125 mL of sodium hexametaphosphate solution (40 g/L). Stir until the soil is thoroughly wetted. Allow to soak for at least 16 h.

9.3 At the end of the soaking period, disperse the sample further, using either stirring apparatus A or B. If stirring apparatus A is used, transfer the soil-water slurry from the beaker into the special dispersion cup shown in Fig. 2, washing any residue from the beaker into the cup with distilled or demineralized water (Note 9). Add distilled or demineralized water, if necessary, so that the cup is more than half full. Stir for a period of 1 min.

NOTE 9—A large size syringe is a convenient device for handling the water in the washing operation. Other devices include the wash-water bottle and a hose with nozzle connected to a pressurized distilled water tank.

9.4 If stirring apparatus B (Fig. 3) is used, remove the cover cap and connect the cup to a compressed air supply by means of a rubber hose. A air gage must be on the line between the cup and the control valve. Open the control valve so that the gage indicates 1 psi (7 kPa) pressure (Note 10). Transfer the

Copyright ASTM International

soil-water slurry from the beaker to the air-jet dispersion cup by washing with distilled or demineralized water. Add distilled or demineralized water, if necessary, so that the total volume in the cup is 250 mL, but no more.

NOTE 10—The initial air pressure of 1 psi is required to prevent the soil-water mixture from entering the air-jet chamber when the mixture is transferred to the dispersion cup.

9.5 Place the cover cap on the cup and open the air control valve until the gage pressure is 20 psi (140 kPa). Disperse the soil according to the following schedule:

Plasticity Index	Dispersion Period, min
Under 5	5
6 to 20	10
Over 20	15

Soils containing large percentages of mica need be dispersed for only 1 min. After the dispersion period, reduce the gage pressure to 1 psi preparatory to transfer of soil-water slurry to the sedimentation cylinder.

10. Hydrometer Test

10.1 Immediately after dispersion, transfer the soil-water slurry to the glass sedimentation cylinder, and add distilled or demineralized water until the total volume is 1000 mL.

10.2 Using the palm of the hand over the open end of the cylinder (or a rubber stopper in the open end), turn the cylinder upside down and back for a period of 1 min to complete the agitation of the slurry (Note 11). At the end of 1 min set the cylinder in a convenient location and take hydrometer readings at the following intervals of time (measured from the beginning of sedimentation), or as many as may be needed, depending on the sample or the specification for the material under test: 2, 5, 15, 30, 60, 250, and 1440 min. If the controlled water bath is used, the sedimentation cylinder should be placed in the bath between the 2- and 5-min readings.

NOTE 11—The number of turns during this minute should be approximately 60, counting the turn upside down and back as two turns. Any soil remaining in the bottom of the cylinder during the first few turns should be loosened by vigorous shaking of the cylinder while it is in the inverted position.

10.3 When it is desired to take a hydrometer reading, carefully insert the hydrometer about 20 to 25 s before the reading is due to approximately the depth it will have when the reading is taken. As soon as the reading is taken, carefully remove the hydrometer and place it with a spinning motion in a graduate of clean distilled or demineralized water.

NOTE 12—It is important to remove the hydrometer immediately after each reading. Readings shall be taken at the top of the meniscus formed by the suspension around the stem, since it is not possible to secure readings at the bottom of the meniscus.

10.4 After each reading, take the temperature of the suspension by inserting the thermometer into the suspension.

11. Sieve Analysis

11.1 After taking the final hydrometer reading, transfer the suspension to a No. 200 (75-μm) sieve and wash with tap water until the wash water is clear. Transfer the material on the No. 200 sieve to a suitable container, dry in an oven at 230 ± 9°F (110 ± 5°C) and make a sieve analysis of the portion retained, using as many sieves as desired, or required for the material, or upon the specification of the material under test.

CALCULATIONS AND REPORT

12. Sieve Analysis Values for the Portion Coarser than the No. 10 (2.00-mm) Sieve

12.1 Calculate the percentage passing the No. 10 sieve by dividing the mass passing the No. 10 sieve by the mass of soil originally split on the No. 10 sieve, and multiplying the result by 100. To obtain the mass passing the No. 10 sieve, subtract the mass retained on the No. 10 sieve from the original mass.

12.2 To secure the total mass of soil passing the No. 4 (4.75-mm) sieve, add to the mass of the material passing the No. 10 sieve the mass of the fraction passing the No. 4 sieve and retained on the No. 10 sieve. To secure the total mass of soil passing the ⅜-in. (9.5-mm) sieve, add to the total mass of soil passing the No. 4 sieve, the mass of the fraction passing the ⅜-in. sieve and retained on the No. 4 sieve. For the remaining sieves, continue the calculations in the same manner.

12.3 To determine the total percentage passing for each sieve, divide the total mass passing (see 12.2) by the total mass of sample and multiply the result by 100.

13. Hygroscopic Moisture Correction Factor

13.1 The hydroscopic moisture correction factor is the ratio between the mass of the oven-dried sample and the air-dry mass before drying. It is a number less than one, except when there is no hygroscopic moisture.

14. Percentages of Soil in Suspension

14.1 Calculate the oven-dry mass of soil used in the hydrometer analysis by multiplying the air-dry mass by the hygroscopic moisture correction factor.

14.2 Calculate the mass of a total sample represented by the mass of soil used in the hydrometer test, by dividing the oven-dry mass used by the percentage passing the No. 10 (2.00-mm) sieve, and multiplying the result by 100. This value is the weight W in the equation for percentage remaining in suspension.

14.3 The percentage of soil remaining in suspension at the level at which the hydrometer is measuring the density of the suspension may be calculated as follows (Note 13): For hydrometer 151H:

$$P = [(100\,000/W) \times G/(G - G_1)](R - G_1) \quad (1)$$

NOTE 13—The bracketed portion of the equation for hydrometer 151H is constant for a series of readings and may be calculated first and then multiplied by the portion in the parentheses.

For hydrometer 152H:

$$P = (Ra/W) \times 100 \quad (2)$$

where:

a = correction faction to be applied to the reading of hydrometer 152H. (Values shown on the scale are computed using a specific gravity of 2.65. Correction factors are given in Table 1),

Copyright ASTM International

P = percentage of soil remaining in suspension at the level at which the hydrometer measures the density of the suspension,
R = hydrometer reading with composite correction applied (Section 7),
W = oven-dry mass of soil in a total test sample represented by mass of soil dispersed (see 14.2), g,
G = specific gravity of the soil particles, and
G_1 = specific gravity of the liquid in which soil particles are suspended. Use numerical value of one in both instances in the equation. In the first instance any possible variation produces no significant effect, and in the second instance, the composite correction for R is based on a value of one for G_1.

15. Diameter of Soil Particles

15.1 The diameter of a particle corresponding to the percentage indicated by a given hydrometer reading shall be calculated according to Stokes' law (Note 14), on the basis that a particle of this diameter was at the surface of the suspension at the beginning of sedimentation and had settled to the level at which the hydrometer is measuring the density of the suspension. According to Stokes' law: see Table 2

$$D = \sqrt{[30n/980(G - G_1)] \times L/T} \quad (3)$$

where:
D = diameter of particle, mm,
n = coefficient of viscosity of the suspending medium (in this case water) in poises (varies with changes in temperature of the suspending medium),
L = distance from the surface of the suspension to the level at which the density of the suspension is being measured, cm. (For a given hydrometer and sedimentation cylinder, values vary according to the hydrometer readings. This distance is known as effective depth (see Table 2)),
T = interval of time from beginning of sedimentation to the taking of the reading, min,
G = specific gravity of soil particles, and
G_1 = specific gravity (relative density) of suspending medium (value may be used as 1.000 for all practical purposes).

TABLE 1 Values of Correction Factor, α, for Different Specific Gravities of Soil Particles[A]

Specific Gravity	Correction Factor[A]
2.95	0.94
2.90	0.95
2.85	0.96
2.80	0.97
2.75	0.98
2.70	0.99
2.65	1.00
2.60	1.01
2.55	1.02
2.50	1.03
2.45	1.05

[A] For use in equation for percentage of soil remaining in suspension when using Hydrometer 152H.

TABLE 2 Values of Effective Depth Based on Hydrometer and Sedimentation Cylinder of Specified Sizes[A]

Hydrometer 151H		Hydrometer 152H			
Actual Hydrometer Reading	Effective Depth, L, cm	Actual Hydrometer Reading	Effective Depth, L, cm	Actual Hydrometer Reading	Effective Depth, L, cm
1.000	16.3	0	16.3	31	11.2
1.001	16.0	1	16.1	32	11.1
1.002	15.8	2	16.0	33	10.9
1.003	15.5	3	15.8	34	10.7
1.004	15.2	4	15.6	35	10.6
1.005	15.0	5	15.5		
1.006	14.7	6	15.3	36	10.4
1.007	14.4	7	15.2	37	10.2
1.008	14.2	8	15.0	38	10.1
1.009	13.9	9	14.8	39	9.9
1.010	13.7	10	14.7	40	9.7
1.011	13.4	11	14.5	41	9.6
1.012	13.1	12	14.3	42	9.4
1.013	12.9	13	14.2	43	9.2
1.014	12.6	14	14.0	44	9.1
1.015	12.3	15	13.8	45	8.9
1.016	12.1	16	13.7	46	8.8
1.017	11.8	17	13.5	47	8.6
1.018	11.5	18	13.3	48	8.4
1.019	11.3	19	13.2	49	8.3
1.020	11.0	20	13.0	50	8.1
1.021	10.7	21	12.9	51	7.9
1.022	10.5	22	12.7	52	7.8
1.023	10.2	23	12.5	53	7.6
1.024	10.0	24	12.4	54	7.4
1.025	9.7	25	12.2	55	7.3
1.026	9.4	26	12.0	56	7.1
1.027	9.2	27	11.9	57	7.0
1.028	8.9	28	11.7	58	6.8
1.029	8.6	29	11.5	59	6.6
1.030	8.4	30	11.4	60	6.5
1.031	8.1				
1.032	7.8				
1.033	7.6				
1.034	7.3				
1.035	7.0				
1.036	6.8				
1.037	6.5				
1.038	6.2				

[A] Values of effective depth are calculated from the equation:

$$L = L_1 + 1/2\,[L_2 - (V_B/A)] \quad (5)$$

where:
L = effective depth, cm,
L_1 = distance along the stem of the hydrometer from the top of the bulb to the mark for a hydrometer reading, cm,
L_2 = overall length of the hydrometer bulb, cm,
V_B = volume of hydrometer bulb, cm^3, and
A = cross-sectional area of sedimentation cylinder, cm^2

Values used in calculating the values in Table 2 are as follows:
For both hydrometers, 151H and 152H:
L_2 = 14.0 cm
V_B = 67.0 cm^3
A = 27.8 cm^2

For hydrometer 151H:
L_1 = 10.5 cm for a reading of 1.000
= 2.3 cm for a reading of 1.031

For hydrometer 152H:
L_1 = 10.5 cm for a reading of 0 g/litre
= 2.3 cm for a reading of 50 g/litre

NOTE 14—Since Stokes' law considers the terminal velocity of a single sphere falling in an infinity of liquid, the sizes calculated represent the

Copyright ASTM International

diameter of spheres that would fall at the same rate as the soil particles.

15.2 For convenience in calculations the above equation may be written as follows: see Table 3

$$D = K\sqrt{LT} \quad (4)$$

where:

K = constant depending on the temperature of the suspension and the specific gravity of the soil particles. Values of K for a range of temperatures and specific gravities are given in Table 3. The value of K does not change for a series of readings constituting a test, while values of L and T do vary.

15.3 Values of D may be computed with sufficient accuracy, using an ordinary 10-in. slide rule.

NOTE 15—The value of L is divided by T using the A- and B-scales, the square root being indicated on the D-scale. Without ascertaining the value of the square root it may be multiplied by K, using either the C- or CI-scale.

16. Sieve Analysis Values for Portion Finer than No. 10 (2.00-mm) Sieve

16.1 Calculation of percentages passing the various sieves used in sieving the portion of the sample from the hydrometer test involves several steps. The first step is to calculate the mass of the fraction that would have been retained on the No. 10 sieve had it not been removed. This mass is equal to the total percentage retained on the No. 10 sieve (100 minus total percentage passing) times the mass of the total sample represented by the mass of soil used (as calculated in 14.2), and the result divided by 100.

16.2 Calculate next the total mass passing the No. 200 sieve. Add together the fractional masses retained on all the sieves, including the No. 10 sieve, and subtract this sum from the mass of the total sample (as calculated in 14.2).

16.3 Calculate next the total masses passing each of the other sieves, in a manner similar to that given in 12.2.

16.4 Calculate last the total percentages passing by dividing the total mass passing (as calculated in 16.3) by the total mass of sample (as calculated in 14.2), and multiply the result by 100.

17. Graph

17.1 When the hydrometer analysis is performed, a graph of the test results shall be made, plotting the diameters of the particles on a logarithmic scale as the abscissa and the percentages smaller than the corresponding diameters to an arithmetic scale as the ordinate. When the hydrometer analysis is not made on a portion of the soil, the preparation of the graph is optional, since values may be secured directly from tabulated data.

18. Report

18.1 The report shall include the following:

18.1.1 Maximum size of particles,

18.1.2 Percentage passing (or retained on) each sieve, which may be tabulated or presented by plotting on a graph (Note 16),

18.1.3 Description of sand and gravel particles:

18.1.3.1 Shape—rounded or angular,

18.1.3.2 Hardness—hard and durable, soft, or weathered and friable,

18.1.4 Specific gravity, if unusually high or low,

18.1.5 Any difficulty in dispersing the fraction passing the No. 10 (2.00-mm) sieve, indicating any change in type and amount of dispersing agent, and

18.1.6 The dispersion device used and the length of the dispersion period.

NOTE 16—This tabulation of graph represents the gradation of the sample tested. If particles larger than those contained in the sample were removed before testing, the report shall so state giving the amount and maximum size.

18.2 For materials tested for compliance with definite specifications, the fractions called for in such specifications shall be reported. The fractions smaller than the No. 10 sieve shall be read from the graph.

18.3 For materials for which compliance with definite specifications is not indicated and when the soil is composed almost entirely of particles passing the No. 4 (4.75-mm) sieve, the results read from the graph may be reported as follows:

(1) Gravel, passing 3-in. and retained on No. 4 sieve ..... %
(2) Sand, passing No. 4 sieve and retained on No. 200 sieve ..... %
  (a) Coarse sand, passing No. 4 sieve and retained on No. 10 sieve ..... %
  (b) Medium sand, passing No. 10 sieve and retained on No. 40 sieve ..... %

TABLE 3 Values of K for Use in Equation for Computing Diameter of Particle in Hydrometer Analysis

Temperature,° C	Specific Gravity of Soil Particles								
	2.45	2.50	2.55	2.60	2.65	2.70	2.75	2.80	2.85
16	0.01530	0.01505	0.01481	0.01457	0.01435	0.01414	0.01394	0.01374	0.01356
17	0.01511	0.01486	0.01462	0.01439	0.01417	0.01396	0.01376	0.01356	0.01338
18	0.01492	0.01467	0.01443	0.01421	0.01399	0.01378	0.01359	0.01339	0.01321
19	0.01474	0.01449	0.01425	0.01403	0.01382	0.01361	0.01342	0.1323	0.01305
20	0.01456	0.01431	0.01408	0.01386	0.01365	0.01344	0.01325	0.01307	0.01289
21	0.01438	0.01414	0.01391	0.01369	0.01348	0.01328	0.01309	0.01291	0.01273
22	0.01421	0.01397	0.01374	0.01353	0.01332	0.01312	0.01294	0.01276	0.01258
23	0.01404	0.01381	0.01358	0.01337	0.01317	0.01297	0.01279	0.01261	0.01243
24	0.01388	0.01365	0.01342	0.01321	0.01301	0.01282	0.01264	0.01246	0.01229
25	0.01372	0.01349	0.01327	0.01306	0.01286	0.01267	0.01249	0.01232	0.01215
26	0.01357	0.01334	0.01312	0.01291	0.01272	0.01253	0.01235	0.01218	0.01201
27	0.01342	0.01319	0.01297	0.01277	0.01258	0.01239	0.01221	0.01204	0.01188
28	0.01327	0.01304	0.01283	0.01264	0.01244	0.01255	0.01208	0.01191	0.01175
29	0.01312	0.01290	0.01269	0.01249	0.01230	0.01212	0.01195	0.01178	0.01162
30	0.01298	0.01276	0.01256	0.01236	0.01217	0.01199	0.01182	0.01165	0.01149

(c) Fine sand, passing No. 40 sieve and retained on No. 200 sieve ..... %
(3) Silt size, 0.074 to 0.005 mm ..... %
(4) Clay size, smaller than 0.005 mm ..... %
Colloids, smaller than 0.001 mm ..... %

18.4 For materials for which compliance with definite specifications is not indicated and when the soil contains material retained on the No. 4 sieve sufficient to require a sieve analysis on that portion, the results may be reported as follows (Note 17):

SIEVE ANALYSIS

Sieve Size	Percentage Passing
3-in.	.....
2-in.	.....
1½-in.	.....
1-in.	.....
¾-in.	.....
⅜-in.	.....
No. 4 (4.75-mm)	.....
No. 10 (2.00-mm)	.....
No. 40 (425-µm)	.....
No. 200 (75-µm)	.....

HYDROMETER ANALYSIS

0.074 mm	.....
0.005 mm	.....
0.001 mm	.....

NOTE 17—No. 8 (2.36-mm) and No. 50 (300-µm) sieves may be substituted for No. 10 and No. 40 sieves.

19. Keywords

19.1 grain-size; hydrometer analysis; hygroscopic moisture; particle-size; sieve analysis

ASTM International takes no position respecting the validity of any patent rights asserted in connection with any item mentioned in this standard. Users of this standard are expressly advised that determination of the validity of any such patent rights, and the risk of infringement of such rights, are entirely their own responsibility.

This standard is subject to revision at any time by the responsible technical committee and must be reviewed every five years and if not revised, either reapproved or withdrawn. Your comments are invited either for revision of this standard or for additional standards and should be addressed to ASTM International Headquarters. Your comments will receive careful consideration at a meeting of the responsible technical committee, which you may attend. If you feel that your comments have not received a fair hearing you should make your views known to the ASTM Committee on Standards, at the address shown below.

This standard is copyrighted by ASTM International, 100 Barr Harbor Drive, PO Box C700, West Conshohocken, PA 19428-2959, United States. Individual reprints (single or multiple copies) of this standard may be obtained by contacting ASTM at the above address or at 610-832-9585 (phone), 610-832-9555 (fax), or service@astm.org (e-mail); or through the ASTM website (www.astm.org).

Copyright ASTM International

Designation: D 2166 – 06

Standard Test Method for Unconfined Compressive Strength of Cohesive Soil[1]

This standard is issued under the fixed designation D 2166; the number immediately following the designation indicates the year of original adoption or, in the case of revision, the year of last revision. A number in parentheses indicates the year of last reapproval. A superscript epsilon (ε) indicates an editorial change since the last revision or reapproval.

1. Scope*

1.1 This test method covers the determination of the unconfined compressive strength of cohesive soil in the intact, remolded, or reconstituted condition, using strain-controlled application of the axial load.

1.2 This test method provides an approximate value of the strength of cohesive soils in terms of total stresses.

1.3 This test method is applicable only to cohesive materials which will not expel or bleed water (water expelled from the soil due to deformation or compaction) during the loading portion of the test and which will retain intrinsic strength after removal of confining pressures, such as clays or cemented soils. Dry and crumbly soils, fissured or varved materials, silts, peats, and sands cannot be tested with this method to obtain valid unconfined compression strength values.

NOTE 1—The determination of the unconsolidated, undrained strength of cohesive soils with lateral confinement is covered by Test Method D 2850.

1.4 This test method is not a substitute for Test Method D 2850.

1.5 All observed and calculated values shall conform to the guidelines for significant digits and rounding established in Practice D 6026.

1.5.1 The procedures used to specify how data are collected/recorded and calculated in this test method are regarded as the industry standard. In addition, they are representative of the significant digits that should generally be retained. The procedures used do not consider material variation, purpose for obtaining the data, special purpose studies, or any considerations for the user's objectives; and it is common practice to increase or reduce significant digits of reported data to commensurate with these considerations. It is beyond the scope of this test method to consider significant digits used in analysis methods for engineering design.

1.6 The values stated in SI units are to be regarded as the standard. The values stated in inch-pound units are approximate.

1.7 *This standard does not purport to address all of the safety problems, if any, associated with its use. It is the responsibility of the user of this standard to establish appropriate safety and health practices and determine the applicability of regulatory limitations prior to use.*

2. Referenced Documents

2.1 *ASTM Standards:* [2]

D 653 Terminology Relating to Soil, Rock, and Contained Fluids

D 854 Test Methods for Specific Gravity of Soil Solids by Water Pycnometer

D 1587 Practice for Thin-Walled Tube Sampling of Soils for Geotechnical Purposes

D 2216 Test Methods for Laboratory Determination of Water (Moisture) Content of Soil and Rock by Mass

D 2488 Practice for Description and Identification of Soils (Visual-Manual Procedure)

D 2850 Test Method for Unconsolidated-Undrained Triaxial Compression Test on Cohesive Soils

D 3740 Practice for Minimum Requirements for Agencies Engaged in the Testing and/or Inspection of Soil and Rock as Used in Engineering Design and Construction

D 4220 Practices for Preserving and Transporting Soil Samples

D 4318 Test Methods for Liquid Limit, Plastic Limit, and Plasticity Index of Soils

D 6026 Practice for Using Significant Digits in Geotechnical Data

D 6913 Test Methods for Particle-Size Distribution (Gradation) of Soils Using Sieve Analysis

E 177 Practice for Use of the Terms Precision and Bias in ASTM Test Methods

E 691 Practice for Conducting an Interlaboratory Study to Determine the Precision of a Test Method

3. Terminology

3.1 *Definitions:* Refer to Terminology D 653 for standard definitions of terms.

[1] This test method is under the jurisdiction of ASTM Committee D18 on Soil and Rock and is the direct responsibility of Subcommittee D18.05 on Strength and Compressibility of Soils.

Current edition approved July 15, 2006. Published January 2007. Originally approved in 1963. Last previous edition approved in 2000 as D 2166 – 00[ε1].

[2] For referenced ASTM standards, visit the ASTM website, www.astm.org, or contact ASTM Customer Service at service@astm.org. For *Annual Book of ASTM Standards* volume information, refer to the standard's Document Summary page on the ASTM website.

***A Summary of Changes section appears at the end of this standard.**

Copyright © ASTM International, 100 Barr Harbor Drive, PO Box C700, West Conshohocken, PA 19428-2959, United States.

Copyright ASTM International

3.2 *Definitions of Terms Specific to This Standard:*

3.2.1 *unconfined compressive strength* (q_u)—the compressive stress at which an unconfined cylindrical specimen of soil will fail in a simple compression test. In this test method, unconfined compressive strength is taken as the maximum load attained per unit area or the load per unit area at 15 % axial strain, whichever is secured first during the performance of a test.

3.2.2 *shear strength* (s_u)—for unconfined compressive strength test specimens, the shear strength is calculated to be ½ of the compressive stress at failure, as defined in 3.2.1.

4. Significance and Use

4.1 The primary purpose of the unconfined compression test is to quickly obtain a measure of compressive strength for those soils that possess sufficient cohesion to permit testing in the unconfined state.

4.2 Samples of soils having slickensided or fissured structure, samples of some types of loess, very soft clays, dry and crumbly soils and varved materials, or samples containing significant portions of silt or sand, or both (all of which usually exhibit cohesive properties), frequently display higher shear strengths when tested in accordance with Test Method D 2850. Also, unsaturated soils will usually exhibit different shear strengths when tested in accordance with Test Method D 2850.

4.3 If tests on the same sample in both its intact and remolded states are performed, the sensitivity of the material can be determined. This method of determining sensitivity is suitable only for soils that can retain a stable specimen shape in the remolded state.

NOTE 2—For soils that will not retain a stable shape, a vane shear test or Test Method D 2850 can be used to determine sensitivity.

NOTE 3—The quality of the result produced by this standard is dependent on the competence of the personnel performing it, and the suitability of the equipment and facilities used. Agencies that meet the criteria of Practice D 3740 are generally considered capable of competent and objective testing/sampling/inspection. Users of this standard are cautioned that compliance with Practice D 3740 does not in itself ensure reliable results. Reliable results depend on many factors; Practice D 3740 provides a means of evaluating some of those factors.

5. Apparatus

5.1 *Compression Device*, The compression device may be a platform weighing scale equipped with a screw-jack-activated load yoke, a hydraulic loading device, or any other compression device with sufficient capacity and control to provide the rate of loading prescribed in 7.1. For soil with an unconfined compressive strength of less than 100 kPa (1.0 ton/ft^2) the compression device shall be capable of measuring the compressive stress to within 1 kPa (0.01 ton/ft^2). For soil with an unconfined compressive strength of 100 kPa (1.0 ton/ft^2) or greater, the compression device shall be capable of measuring the compressive stress to the nearest 5 kPa (0.05 ton/ft^2).

5.2 *Sample Extruder*, capable of extruding the soil core from the sampling tube at a uniform rate in the same direction of travel in which the sample entered the tube, and with negligible disturbance of the sample. Conditions at the time of sample removal may dictate the direction of removal, but the principal concern is to reduce the potential for additional disturbance beyond that incurred during initial sampling.

5.3 *Deformation Indicator*, The deformation indicator shall be a dial indicator graduated to 0.03 mm (0.001 in.) or better and having a travel range of at least 20 % of the length of the test specimen, or some other measuring device, such as an electronic deformation measuring device, meeting these requirements.

5.4 *Dial Comparator*, or other suitable device, for measuring the physical dimensions of the specimen to within 0.1 % of the measured dimension.

NOTE 4—Vernier calipers are not recommended for soft specimens, which will deform as the calipers are applied on the specimen.

5.5 *Timer*, A timing device indicating the elapsed testing time to the nearest second shall be used for establishing the rate of strain application prescribed in 7.1.

5.6 *Balance*, The balance used to weigh specimens shall determine the mass of the specimen to within 0.1 % of its total mass.

5.7 *Equipment*, as specified in Test Method D 2216.

5.8 *Miscellaneous Apparatus*, including specimen trimming and carving tools, remolding apparatus, water content cans, and data sheets, as required.

6. Preparation of Test Specimens

6.1 *Specimen Size*—Specimens shall have a minimum diameter of 30 mm (1.3 in.) and the largest particle contained within the test specimen shall be smaller than one tenth of the specimen diameter. For specimens having a diameter of 72 mm (2.8 in.) or larger, the largest particle size shall be smaller than one sixth of the specimen diameter. If, after completion of a test on an intact specimen, it is found, based on visual observation, that larger particles than permitted are present, indicate this information in the remarks section of the report of test data (Note 5). The height-to-diameter ratio shall be between 2 and 2.5. Determine the average height and diameter of the test specimen using the apparatus specified in 5.4. Take a minimum of three height measurements (120° apart), and at least three diameter measurements at the quarter points of the height.

NOTE 5—If large soil particles are found in the specimen after testing, a particle-size analysis performed in accordance with Test Method D 6913 may be performed to confirm the visual observation and the results provided with the test report.

6.2 *Intact Specimens*—Prepare intact specimens from large samples or from samples secured in accordance with Practice D 1587 and preserved and transported in accordance with the practices for Group C samples in Practices D 4220. Tube specimens may be tested without trimming except for the squaring of ends, if conditions of the sample justify this procedure. Handle specimens carefully to reduce the potential for additional disturbance, changes in cross section, or loss of water content. If compression or any type of noticeable disturbance would be caused by the extrusion device, split the sample tube lengthwise or cut it off in small sections to facilitate removal of the specimen with minimal disturbance. Prepare carved specimens with minimal disturbance, and whenever possible, in a humidity-controlled room. Make every

Copyright ASTM International

effort to prevent a change in water content of the soil. Specimens shall be of uniform circular cross section with ends perpendicular to the longitudinal axis of the specimen. When carving or trimming, remove any small pebbles or shells encountered. Carefully fill voids on the surface of the specimen with remolded soil obtained from the trimmings. When pebbles or crumbling result in excessive irregularity at the ends, cap the specimen with a minimum thickness of plaster of paris, hydrostone, or similar material. When sample condition permits, a vertical lathe that will accommodate the total sample may be used as an aid in carving the specimen to the required diameter. Where prevention of the development of appreciable capillary forces is deemed important, seal the specimen with a rubber membrane, thin plastic coatings, or with a coating of grease or sprayed plastic immediately after preparation and during the entire testing cycle. Determine the mass and dimensions of the test specimen. If the specimen is to be capped, its mass and dimensions should be determined before capping. If the entire test specimen is not to be used for determination of water content, secure a representative sample of trimmings for this purpose, placing them immediately in a covered container. The water content determination shall be performed in accordance with Test Method D 2216.

6.3 *Remolded Specimens*—Specimens may be prepared either from a failed intact specimen or from a disturbed sample, providing it is representative of the failed intact specimen. In the case of failed intact specimens, wrap the material in a thin rubber membrane and work the material thoroughly with the fingers to assure complete remolding. Avoid entrapping air in the specimen. Exercise care to obtain a uniform density, to remold to the same void ratio as the intact specimen, and to preserve the natural water content of the soil. Form the disturbed material into a mold of circular cross section having dimensions meeting the requirements of 6.1. After removal from the mold, determine the mass and dimensions of the test specimens.

6.4 *Reconstituted Specimens*—Specimens shall be prepared to the predetermined water content and density prescribed by the individual assigning the test (Note 6). After a specimen is formed, trim the ends perpendicular to the longitudinal axis, remove from the mold, and determine the mass and dimensions of the test specimen.

NOTE 6—Experience indicates that it is difficult to compact, handle, and obtain valid results with specimens that have a degree of saturation that is greater than 90 %.

7. Procedure

7.1 Place the specimen in the loading device so that it is centered on the bottom platen. Adjust the loading device carefully so that the upper platen just makes contact with the specimen. Zero the deformation indicator or record the initial reading of the electronic deformation device. Apply the load so as to produce an axial strain at a rate of ½ to 2 %/min. Record load, deformation, and time values at sufficient intervals to define the shape of the stress-strain curve (usually 10 to 15 points are sufficient). The rate of strain should be chosen so that the time to failure does not exceed about 15 min (Note 7). Continue loading until the load values decrease with increasing strain, or until 15 % strain is reached. Indicate the rate of strain in the report of the test data, as required in 9.1.7. Determine the water content of the test specimen using the entire specimen, unless representative trimmings are obtained for this purpose, as in the case of intact specimens. Indicate on the test report whether the water content sample was obtained before or after the shear test, as required in 9.1.2.

NOTE 7—Softer materials that will exhibit larger deformation at failure should be tested at a higher rate of strain. Conversely, stiff or brittle materials that will exhibit small deformations at failure should be tested at a lower rate of strain.

7.2 Make a sketch, or take a photo, of the test specimen at failure showing the slope angle of the failure surface if the angle is measurable.

7.3 A copy of a example data sheet is included in Appendix X1. Any data sheet can be used, provided the form contains all the required data.

8. Calculation

8.1 Calculate the axial strain, ϵ_1, to the nearest 0.1 %, for a given applied load, as follows:

$$\epsilon_1 = \frac{\Delta L}{L_0} \times 100$$

where:

ΔL = length change of specimen as read from deformation indicator or computed from the electronic device, mm (in.), and

L_0 = initial length of test specimen, mm (in).

8.2 Calculate the average cross-sectional area, A, for a given applied load, as follows:

$$A = \frac{A_0}{\left(1 - \frac{\epsilon_1}{100}\right)}$$

where:

A_0 = initial average cross-sectional area of the specimen, mm ^{2}(in. ^{2}), and

ϵ_1 = axial strain for the given load, expressed as a decimal.

8.3 Calculate the compressive stress, σ_c, to three significant figures or nearest 1 kPa (0.01 ton/ft ^{2}), for a given applied load, as follows:

$$\sigma_c = (P/A)$$

where:

P = given applied load, kN (lbf),

A = corresponding average cross-sectional area mm ^{2}(in. ^{2}).

8.4 *Graph*—If desired, a graph showing the relationship between compressive stress (ordinate) and axial strain (abscissa) may be plotted. Select the maximum value of compressive stress, or the compressive stress at 15 % axial strain, whichever is secured first, and report as the unconfined compressive strength, q_u. Whenever it is considered necessary for proper interpretation, include the graph of the stress-strain data as part of the data reported.

8.5 If both the intact and remolded compressive strengths are measured, determine the sensitivity, S_T, as follows:

Copyright ASTM International

$$S_T = \frac{q_u \text{ (intact specimen)}}{q_u \text{ (remolded specimen)}}$$

9. Report

9.1 The report should include the following:

9.1.1 Identification and visual description of the specimen, including soil classification, symbol, and whether the specimen is intact, remolded, reconstituted, etc. Also include specimen identifying information, such as project, location, boring number, sample number, depth, etc. Visual descriptions shall be made in accordance with Practice D 2488,

9.1.2 Initial dry density and water content (specify if the water content specimen was obtained before or after shear, and whether from trimmings or the entire specimen),

9.1.3 Degree of saturation (Note 8), if computed,

NOTE 8—The specific gravity determined in accordance with Test Method D 854 is required for calculation of the degree of saturation.

9.1.4 Unconfined compressive strength and shear strength,

9.1.5 Average height and diameter of specimen,

9.1.6 Height-to-diameter ratio,

9.1.7 Average rate of strain to failure, %,

9.1.8 Strain at failure, %,

9.1.9 Liquid and plastic limits, if determined, in accordance with Test Method D 4318,

9.1.10 Failure sketch or photo,

9.1.11 Stress-strain graph, if prepared,

9.1.12 Sensitivity, if determined,

9.1.13 Particle size analysis, if determined, in accordance with Test Method D 6913, and

9.1.14 *Remarks*—Note any unusual conditions or other data that would be considered necessary to properly interpret the results obtained, for example, slickensides, stratification, shells, pebbles, roots, or brittleness, the type of failure (that is, bulge, diagonal shear, etc.).

10. Precision and Bias

10.1 *Precision*—Criteria for judging the acceptability of test results obtained by this test method on rigid polyurethane foam (density about 0.09 g/cm^3) is given in Table 1. These estimates of precision are based on the results of the interlaboratory program conducted by the ASTM Reference Soils and Testing Program.[3] The precision estimates will vary with the material/soil type being tested, and judgement is required when applying these estimates to soil.

TABLE 1 Summary of Test Results from Each Laboratory (Compressive Strength Data on Rigid Polyurethane Foam (density about 0.09 g/cm^3))

(1) Number of Triplicate Test Laboratories	(2) Test Parameter[A]	(3) Average Value[B]	(4) Standard Deviation[C]	(5) Acceptable Range of Two Results[D]
Single-Operator Results (Wiithin-Laboratory Repeatability):				
22	Strength, kPa	989	42	120
22	Strain, %	4.16	0.32	0.9
Multilaboratory Results (Between- Laboratory Reproducibility):				
22	Strength, kPa	989	53	150
22	Strain, %	4.16	0.35	1.0

[A]Strength = peak compressive stress and strain = axial strain at peak compressive stress.

[B]The number of significant digits and decimal places presented are representative of the input data. In accordance with Practice D 6026, the standard deviation and acceptable range of results can not have more decimal places than the input data.

[C]Standard deviation is calculated in accordance with Practice E 691 and is referred to as the 1*s* limit.

[D]Acceptable range of two results is referred to as the *d2s* limit. It is calculated as $1.960\sqrt{2}\cdot 1s$, as defined by Practice E 177. The difference between two properly conducted tests should not exceed this limit. The number of significant digits/decimal places presented is equal to that prescribed by this test method or Practice D 6026. In addition, the value presented can have the same number of decimal places as the standard deviation, even if that result has more significant digits than the standard deviation.

10.1.1 The data in Table 1 are based on three replicate tests performed by each test laboratory. The single-operator and multilaboratory standard deviation shown in Table 1, Column 4, were obtained in accordance with Practice E 691. Results of two properly conducted tests performed by the same operator on the same material, using the same equipment, and in the shortest practical period of time should not differ by more than the single-operator *d2s* limits shown in Table 1, Column 5. For definition of *d2s* see Footnote D in Table 1. Results of two properly conducted tests performed by different operators and on different days should not differ by more than the multilaboratory *d2s* limits shown in Table 1, Column 5.

10.2 *Bias*—There is no accepted reference value for this test method, therefore, bias cannot be determined.

11. Keywords

11.1 cohesive soil; sensitivity; strain-controlled loading; strength; stress-strain relationships; unconfined compression

[3] Research Report RR: D18-1014 contains the data and statistical analysis used to establish these precision statements and it is available from ASTM Headquarters.

Copyright ASTM International

APPENDIX

(Nonmandatory Information)

X1. Example Data Sheet

UNCONFINED COMPRESSION TEST—UI

Name _____ Date _____ Job No. _____

Location _____

Boring No. _____ Sample No. _____ Depth/Elev. _____

Description of Sample _____

Proving Ring No. _____ Apparatus No. _____

Water Content Determination

Tare No. _____

Wt. Specimen Wet + Tare

Wt. Specimen Dry + Tare

Wt. Water _____

Wt. Tare _____

Wt. Specimen Wet _____

Wt. Specimen Dry _____

Water Content in % Dry Wt.

at 105°C _____ %

Wet Density _____

Dry Density _____

Unconfined Compressive Strength

Initial Diameter D_o _____

Initial Area A_o _____

Initial Height L_o _____

Initial Volume V_o _____

Specific Gravity _____

$$\text{Stress} = \frac{\text{Load}}{\text{Corr. Area}}$$

Test Data

Unit Strain $\frac{\Delta L}{L_o}$

$\frac{L}{D}$ = _____

$$\text{Corr. Area} = \frac{A_o}{1 - \text{Unit Strain}}$$

Elapsed Time-min	Load Dial	Axial Load	Strain Dial	Total Strain	Unit Strain	Corrected Area	Stress	

Type of Sample _____

Attach a photo or sketch of the specimen after failure to this form

Strain Rate _____ %/Min

Remarks _____

SUMMARY OF CHANGES

Committee D18 has identified the location of selected changes to this standard since the last issue (00^{e1}) that may impact the use of this standard.

(*1*) Replaced instances of the term "undisturbed" with the term "intact" and instances of the term "compacted" with "reconstituted." Replaced instances of "remove-the-water-content can" with "water content can."
(*2*) In Referenced Documents, added Test Method D 6913.
(*3*) In the Significance and Use section, changed 4.1 to read "to quickly obtain *a measure of* compressive strength *for those* soils...," and changed 4.3 to read "If *tests on the same sample in* both *its intact* and remolded *states* are performed..." [italics indicate new wording]
(*4*) In the Apparatus section, changed 5.2 to read "...sampling tube *at a uniform rate* in the same..." and ..."principal concern is to *reduce the potential for additional* disturbance *beyond that incurred during initial sampling*." Note 4 was changed to read "...calipers are *applied* on the specimen." [italics indicate new wording].
(*5*) In the Procedure section, changed 7.1 to read "...deformation indicator *or record the initial reading of the electronic deformation device*," and the sentence "The rate of strain used for testing sealed specimens...for better test results" was deleted. [italics indicate new wording]
(*6*) In the Calculation section, corrected the equations to calculate strain and average cross-sectional area, and changed the definition of ΔL to include the following "...indicator or *computed from the electronic device*,..." [italics indicate new wording]

ASTM International takes no position respecting the validity of any patent rights asserted in connection with any item mentioned in this standard. Users of this standard are expressly advised that determination of the validity of any such patent rights, and the risk of infringement of such rights, are entirely their own responsibility.

This standard is subject to revision at any time by the responsible technical committee and must be reviewed every five years and if not revised, either reapproved or withdrawn. Your comments are invited either for revision of this standard or for additional standards and should be addressed to ASTM International Headquarters. Your comments will receive careful consideration at a meeting of the responsible technical committee, which you may attend. If you feel that your comments have not received a fair hearing you should make your views known to the ASTM Committee on Standards, at the address shown below.

This standard is copyrighted by ASTM International, 100 Barr Harbor Drive, PO Box C700, West Conshohocken, PA 19428-2959, United States. Individual reprints (single or multiple copies) of this standard may be obtained by contacting ASTM at the above address or at 610-832-9585 (phone), 610-832-9555 (fax), or service@astm.org (e-mail); or through the ASTM website (www.astm.org).

Copyright ASTM International

Designation: D 2216 – 05

Standard Test Methods for Laboratory Determination of Water (Moisture) Content of Soil and Rock by Mass[1]

This standard is issued under the fixed designation D 2216; the number immediately following the designation indicates the year of original adoption or, in the case of revision, the year of last revision. A number in parentheses indicates the year of last reapproval. A superscript epsilon (ε) indicates an editorial change since the last revision or reapproval.

This standard has been approved for use by agencies of the Department of Defense.

1. Scope*

1.1 These test methods cover the laboratory determination of the water (moisture) content by mass of soil, rock, and similar materials where the reduction in mass by drying is due to loss of water except as noted in 1.4, 1.5, and 1.7. For simplicity, the word "material" shall refer to soil, rock or aggregate whichever is most applicable.

1.2 Some disciplines, such as soil science, need to determine water content on the basis of volume. Such determinations are beyond the scope of this test method.

1.3 The water content of a material is defined in 3.2.1.

1.4 The term "solid material" as used in geotechnical engineering is typically assumed to mean naturally occurring mineral particles of soil and rock that are not readily soluble in water. Therefore, the water content of materials containing extraneous matter (such as cement etc.) may require special treatment or a qualified definition of water content. In addition, some organic materials may be decomposed by oven drying at the standard drying temperature for this method (110°C). Materials containing gypsum (calcium sulfate dihydrate) or other compounds having significant amounts of hydrated water may present a special problem as this material slowly dehydrates at the standard drying temperature (110°C) and at very low relative humidity, forming a compound (such as calcium sulfate hemihydrate) that is not normally present in natural materials except in some desert soils. In order to reduce the degree of dehydration of gypsum in those materials containing gypsum or to reduce decomposition in highly/fibrous organic soils, it may be desirable to dry the materials at 60°C or in a desiccator at room temperature. Thus, when a drying temperature is used which is different from the standard drying temperature as defined by this test method, the resulting water content may be different from the standard water content determined at the standard drying temperature of 110°C.

NOTE 1—Test Method D 2974 provides an alternate procedure for determining water content of peat materials.

1.5 Materials containing water with substantial amounts of soluble solids (such as salt in the case of marine sediments) when tested by this method will give a mass of solids that includes the previously soluble dissolved solids. These materials require special treatment to remove or account for the presence of precipitated solids in the dry mass of the specimen, or a qualified definition of water content must be used. For example, see Test Method D 4542 regarding information on marine sediments.

1.6 This test standard requires several hours for proper drying of the water content specimen. Test Methods D 4643, D 4944 and D 4959 provide less time-consuming processes for determining water content. See Gilbert[2] for details on the background of Test Method D 4643.

1.7 Two test methods are provided in this standard. The methods differ in the significant digits reported and the size of the specimen (mass) required. The method to be used may be specified by the requesting authority; otherwise Method A shall be performed.

1.7.1 *Method A*—The water content by mass is recorded to the nearest 1 %. For cases of dispute, Method A is the referee method.

1.7.2 *Method B*—The water content by mass is recorded to the nearest 0.1 %.

1.8 This standard requires the drying of material in an oven. If the material being dried is contaminated with certain chemicals, health and safety hazards can exist. Therefore, this standard should not be used in determining the water content of contaminated soils unless adequate health and safety precautions are taken.

1.9 *Units*—The values stated in SI units shall be regarded as standard excluding the Alternative Sieve Sizes listed in Table 1. No other units of measurement are included in this test method.

1.10 Refer to Practice D 6026 for guidance concerning the use of significant figures that shall determine whether Method, A or B is required. This is especially important if the water

[1] This test method is under the jurisdiction of ASTM Committee D18 on Soil and Rock and is the direct responsibility of Subcommittee D18.03 on Texture, Plasticity and Density Characteristics of Soils.

Current edition approved March 1, 2005. Published April 2005. Originally approved in 1963. Last previous edition approved in 1998 as D 2216 – 98.

[2] Gilbert, P.A., "Computer Controlled Microwave Oven System for Rapid Water Content Determination", Tech. Report GL-88-21, Department of the Army, Waterways Experiment Station, Corps of Engineers, Vicksburg, MS, November 1988.

*A Summary of Changes section appears at the end of this standard.

Copyright © ASTM International, 100 Barr Harbor Drive, PO Box C700, West Conshohocken, PA 19428-2959, United States.

Copyright ASTM International

TABLE 1 Minimum Requirements for Mass of Test Specimen, and Balance Readability

Maximum Particle Size (100 % Passing)		Method A Water Content Recorded to ±1 %		Method B Water Content Recorded to ±0.1 %	
SI Unit Sieve Size	Alternative Sieve Size	Specimen Mass	Balance Readability (g)	Specimen Mass (g)	Balance Readability (g)
75.0 mm	3 in	5 kg	10	50 kg	10
37.5 mm	1-½ in.	1 kg	10	10 kg	10
19.0 mm	¾ in.	250 g	1	2.5 kg	1
9.5 mm	⅜ in.	50 g	0.1	500 g	0.1
4.75 mm	No. 4	20 g	0.1	100 g	0.1
2.00 mm	No. 10	20 g	0.1	20 g	0.01

content will be used to calculate other relationships such as moist mass to dry mass or vice versa, wet unit weight to dry unit weight or vice versa, and total density to dry density or vice versa. For example, if four significant digits are required in any of the above calculations, then the water content has to be recorded to the nearest 0.1 %. This occurs since 1 plus the water content (not in percent) will have four significant digits regardless of what the value of the water content is; that is, 1 plus 0.1/100 = 1.001, a value with four significant digits. While, if three significant digits are acceptable, then the water content can be recorded to the nearest 1 %.

1.11 *This standard does not purport to address all of the safety concerns, if any, associated with its use. It is the responsibility of the user of this standard to establish appropriate safety and health practices and determine the applicability of regulatory limitations prior to use.*

2. Referenced Documents

2.1 *ASTM Standards:* [3]

D 653 Terminology Relating to Soil, Rock, and Contained Fluids

D 2974 Test Methods for Moisture, Ash, and Organic Matter of Peat and Other Organic Soils

D 3740 Practice for Minimum Requirements for Agencies Engaged in the Testing and/or Inspection of Soil and Rock as Used in Engineering Design and Construction

D 4220 Practices for Preserving and Transporting Soil Samples

D 4318 Test Method for Liquid Limit, Plastic Limit, and Plasticity Index of Soils

D 4542 Test Method for Pore-Water Extraction and Determination of the Soluble Salt Content of Soils by Refractometer

D 4643 Test Method for Determination of Water (Moisture) Content of Soil by the Microwave Oven Method

D 4753 Specification for Evaluating, Selecting, and Specifying Balances and Standard Masses for Use in Soil, Rock, and Construction Materials Testing

D 4944 Test Method for Field Determination of Water (Moisture) Content of Soil by the Calcium Carbide Gas Pressure Tester Method

D 4959 Test Method for Determination of Water (Moisture) Content of Soil By Direct Heating Method

D 5079 Practices for Preserving and Transporting Rock Core Samples

D 6026 Practice for Using Significant Digits in Calculating and Reporting Geotechnical Test Data

E 145 Specification for Gravity-Convection and Forced-Ventilation Ovens

3. Terminology

3.1 Refer to Terminology D 653 for standard definitions of terms.

3.2 *Definitions:*

3.2.1 *water content by mass (of a material)*—the ratio of the mass of water contained in the pore spaces of soil or rock material, to the solid mass of particles in that material, expressed as a percentage. A standard temperature of 110 ± 5°C is used to determine these masses.

3.3 *Definitions of Terms Specific to This Standard:*

3.3.1 *constant dry mass (of a material)*—the state that a water content specimen has attained when further heating causes, or would cause, less than 1 % or 0.1 % additional loss in mass for Method A or B respectively. The time required to obtain constant dry mass will vary depending on numerous factors. The influence of these factors generally can be established by good judgement, and experience with the materials being tested and the apparatus being used.

4. Summary of Test Method

4.1 A test specimen is dried in an oven at a temperature of 110 ± 5°C to a constant mass. The loss of mass due to drying is considered to be water. The water content is calculated using the mass of water and the mass of the dry specimen.

5. Significance and Use

5.1 For many materials, the water content is one of the most significant index properties used in establishing a correlation between soil behavior and its index properties.

5.2 The water content of a material is used in expressing the phase relationships of air, water, and solids in a given volume of material.

5.3 In fine-grained (cohesive) soils, the consistency of a given soil type depends on its water content. The water content of a soil, along with its liquid and plastic limits as determined by Test Method D 4318, is used to express its relative consistency or liquidity index.

[3] For referenced ASTM standards, visit the ASTM website, www.astm.org, or contact ASTM Customer Service at service@astm.org. For *Annual Book of ASTM Standards* volume information, refer to the standard's Document Summary page on the ASTM website.

Copyright ASTM International

NOTE 2—The quality of the result produced by this standard is dependent on the competence of the personnel performing it, and the suitability of the equipment and facilities used. Agencies that meet the criteria of Practice D 3740 are generally considered capable of competent and objective testing/sampling/inspection/etc. Users of this standard are cautioned that compliance with Practice D 3740 does not in itself ensure reliable results. Reliable results depend on many factors; Practice D 3740 provides a means of evaluating some of those factors.

6. Apparatus

6.1 *Drying Oven*—Vented, thermostatically-controlled, preferably of the forced-draft type, meeting the requirements of Specification E 145 and capable of maintaining a uniform temperature of 110 ± 5°C throughout the drying chamber.

6.2 *Balances*—All balances must meet the requirements of Specification D 4753 and this section. A Class GP1 balance of 0.01 g readability is required for specimens having a mass of up to 200 g (excluding mass of specimen container) and a Class GP2 balance of 0.1 g readability is required for specimens having a mass over 200 g. However, the balance used may be controlled by the number of significant digits needed (see 1.10).

6.3 *Specimen Containers*—Suitable containers made of material resistant to corrosion and change in mass upon repeated heating, cooling, exposure to materials of varying pH, and cleaning. Unless a dessicator is used, containers with close-fitting lids shall be used for testing specimens having a mass of less than about 200 g; while for specimens having a mass greater than about 200 g, containers without lids may be used (see Note 3). One uniquely numbered (identified) container or number-matched container and lid combination as required is needed for each water content determination.

NOTE 3—The purpose of close-fitting lids is to prevent loss of moisture from specimens before initial mass determination, and to prevent absorption of moisture from the atmosphere following drying and before final mass determination.

6.4 *Desiccator (Optional)*—A desiccator cabinet or large desiccator jar of suitable size containing silica gel or anhydrous calcium sulfate. It is preferable to use a desiccant that changes color twhen it needs to be reconstituted.

NOTE 4—Anhydrous calcium sulfate is sold under the trade name Drierite.

6.5 *Container Handling Apparatus*, gloves, tongs, or suitable holder for moving and handling hot containers after drying.

6.6 *Miscellaneous*, knives, spatulas, scoops, quartering cloth, wire saws, etc., as required.

7. Samples

7.1 Soil samples shall be preserved and transported in accordance with Practice D 4220 Section 8 Groups B, C, or D soils. Rock samples shall be preserved and transported in accordance with Practice D 5079 section 7.5.2, Special Care Rock. Keep the samples that are stored prior to testing in non-corrodible airtight containers at a temperature between approximately 3 and 30°C and in an area that prevents direct contact with sunlight. Disturbed samples in jars or other containers shall be stored in such a way as to reduce moisture condensation on the insides of the containers.

7.2 The water content determination should be done as soon as practicable after sampling, especially if potentially corrodible containers (such as thin-walled steel tubes, paint cans, etc.) or plastic sample bags are used.

8. Test Specimen

8.1 For water contents being determined in conjunction with another ASTM method, the specimen mass requirement stated in that method shall be used if one is provided. If no minimum specimen mass is provided in that method then the values given below shall apply. See Howard[4] for background data for the values listed.

8.2 The minimum specimen mass of moist material selected to be representative of the total sample is based on visual maximum particle size in the sample and the Method (Method A or B) used to record the data. Minimum specimen mass and balance readability shall be in accordance with Table 1.

8.3 Using a test specimen smaller than the minimum indicated in 8.2 requires discretion, though it may be adequate for the purposes of the test. Any specimen used not meeting these requirements shall be noted on the test data forms or test data sheets.

8.4 When working with a small (less than 200 g) specimen containing a relatively large gravel particle, it is appropriate not to include this particle in the test specimen. However, any discarded material shall be described and noted on the test data form/sheet.

8.5 For those samples consisting entirely of intact rock or gravel-size aggregate, the minimum specimen mass shall be 500 g. Representative portions of the sample may be broken into smaller particles. The particle size is dictated by the specimen mass, the container volume and the balance being used to determine constant mass, see 10.4. Specimen masses as small as 200 g may be tested if water contents of only two significant digits are acceptable.

9. Test Specimen Selection

9.1 When the test specimen is a portion of a larger amount of material, the specimen must be selected to be representative of the water condition of the entire amount of material. The manner in which the test specimen is selected depends on the purpose and application of the test, type of material being tested, the water condition, and the type of sample (from another test, bag, block, etc.).

9.2 For disturbed samples such as trimmings, bag samples, etc; obtain the test specimen by one of the following methods (listed in order of preference):

9.2.1 If the material is such that it can be manipulated and handled without significant moisture loss and segregation, the material should be mixed thoroughly. Select a representative portion using a scoop of a size that no more than a few scoopfuls are required to obtain the proper size of specimen defined in 8.2. Combine all the portions for the test specimen.

[4] Howard, A. K., "Minimum Test Specimen Mass for Moisture Content Determination", *Geotechnical Testing Journal*, ASTM., Vol. 12, No. 1, March 1989, pp. 39-44.

9.2.2 If the material is such that it cannot be thoroughly mixed or mixed and sampled by a scoop, form a stockpile of the material, mixing as much as possible. Take at least five portions of material at random locations using a sampling tube, shovel, scoop, trowel, or similar device appropriate to the maximum particle size present in the material. Combine all the portions for the test specimen.

9.2.3 If the material or conditions are such that a stockpile cannot be formed, take as many portions of the material as practical, using random locations that will best represent the moisture condition. Combine all the portions for the test specimen.

9.3 Intact samples such as block, tube, split barrel, etc, obtain the test specimen by one of the following methods depending on the purpose and potential use of the sample:

9.3.1 Using a knife, wire saw, or other sharp cutting device, trim the outside portion of the sample a sufficient distance to see if the material is layered, and to remove material that appears more dry or more wet than the main portion of the sample. If the existence of layering is questionable, slice the sample in half. If the material is layered, see 9.3.3.

9.3.2 If the material is not layered, obtain the specimen meeting the mass requirements in 8.2 by: *(1)* taking all or one-half of the interval being tested; *(2)* trimming a representative slice from the interval being tested; or *(3)* trimming the exposed surface of one-half or from the interval being tested.

NOTE 5—Migration of moisture in some cohesionless soils may require that the entire sample be tested.

9.3.3 If a layered material (or more than one material type is encountered), select an average specimen, or individual specimens, or both. Specimens must be properly identified as to location, or what they represent, and appropriate remarks entered on the test data forms or test data sheets.

10. Procedure

10.1 Determine and record the mass of the clean and dry specimen container and its lid, if used along with its identification number.

10.2 Select representative test specimens in accordance with Section 9.

10.3 Place the moist test specimen in the container and, if used, set the lid securely in position. Determine the mass of the container and moist specimen using a balance (see 8.2 and Table 1) selected on the basis of the specimen mass. Record this value.

NOTE 6—To assist in the oven drying of large test specimens, they should be placed in containers having a large surface area (such as pans) and the material broken up into smaller aggregations.

10.4 Remove the lid (if used) and place the container with the moist specimen in the drying oven. Dry the specimen to a constant mass. Maintain the drying oven at 110 ± 5°C unless otherwise specified (see 1.4). The time required to obtain constant mass will vary depending on the type of material, size of specimen, oven type and capacity, and other factors. The influence of these factors generally can be established by good judgment and experience with the materials being tested and the apparatus being used.

10.4.1 In most cases, drying a test specimen overnight (about 12 to 16 h) are sufficient, especially for forced draft ovens. In cases where there is doubt concerning the adequacy of drying to a constant dry mass, see 3.3.1 and check for additional loss in mass with additional oven drying over an adequate time period, for a minimum time period of two hours, however, increasing drying time with increasing specimen mass. A rapid check to see if a relatively large specimen (> than about 100 g of material) is dry; place a small strip of torn paper on top of the material while it is in the oven or just upon removal from the oven, if the paper strip curls the material is not dry. Specimens of sand may often be dried to constant mass in a period of about 4 h, when a forced-draft oven is used.

10.4.2 Since some dry materials may absorb moisture from drying specimens, dried specimens shall be removed before placing moist specimens in the same oven; unless they are being dried overnight.

10.5 After the specimen has dried to constant mass, remove the container from the oven (and replace the lid if used). Allow the specimen and container to cool to room temperature or until the container can be handled comfortably with bare hands and the operation of the balance will not be affected by convection currents and/or its being heated. Determine the mass of the container and oven-dried specimen using the same type/capacity balance used in 10.3. Record this value. Tight fitting lids shall be used if it appears that the specimen is absorbing moisture from the air prior to determination of its dry mass.

10.5.1 Cooling in a desiccator is acceptable in place of tight fitting lids since it greatly reduces absorption of moisture from the atmosphere during cooling.

10.6 A copy of a sample data sheet is shown in Appendix X1. Any data sheet can be used, provided the form contains all the required data.

11. Calculation

11.1 Calculate the water content of the material as follows:

$$w = [(M_{cms} - M_{cds})/(M_{cds} - M_c)] \times 100 = (M_w/M_s) \times 100 \quad (1)$$

where:

w = water content, %,
M_{cms} = mass of container and moist specimen, g,
M_{cds} = mass of container and oven dry specimen, g,
M_c = mass of container, g,
M_w = mass of water ($M_w = M_{cms} - M_{cds}$), g, and
M_s = mass of oven dry specimen ($M_s = M_{cds} - M_c$), g.

12. Report: Test Data Form/Sheet

12.1 The method used to specify how data are recorded on the test data sheets or forms, as given below, is the industry standard, and are representative of the significant digits that should be retained. These requirements do not consider in situ material variation, use of the data, special purpose studies, or any considerations for the user's objectives. It is common practice to increase or reduce significant digits of reported data commensurate with these considerations. It is beyond the scope of the standard to consider significant digits used in analysis method for engineering design.

12.1.1 Test data forms or test data sheets shall include the following:

Copyright ASTM International

12.1.2 Identification of the sample (material) being tested, such as boring number, sample number, test number, container number etc.

12.1.3 Water content of the specimen to the nearest 1 % for Method A or 0.1 % for Method B, as appropriate based on the minimum mass of the specimen. If this method is used in concert with another method, the water content of the specimen should be reported to the value required by the test method for which the water content is being determined. Refer to Practice D 6026 for guidance concerning significant digits, especially if the value obtained from this test method is to be used to calculate other relationships such as unit weight or density. For instance, if it is desired to express dry unit weight to the nearest 0.1 lbf/f^3 (0.02 kN/m^3), it may be necessary to use a balance with a greater readability or use a larger specimen mass to obtain the required significant digits the mass of water so that the water content can be determined to the required significant digits. Also, the significant digits in Practice D 6026 may need to be increased when calculating phase relationships requiring four significant digits.

12.1.4 Indicate if test specimen had a mass less than the minimum indicated in 8.2.

12.1.5 Indicate if test specimen contained more than one material type (layered, etc.).

12.1.6 Indicate the drying temperature if different from 110 ± 5°C.

12.1.7 Indicate if any material (size and amount) was excluded from the test specimen.

12.2 When reporting water content in tables, figures, etc., any data not meeting the requirements of this test method shall be noted, such as not meeting the mass, balance, or temperature requirements or a portion of the material is excluded from the test specimen.

13. Precision and Bias

13.1 *Statements on Precision*[5]:

13.1.1 *Precision*—Test data on precision is not presented due to the nature of the soil or rock materials tested by this test method. It is either not feasible or too costly at this time to have ten or more laboratories participate in a round-robin testing program. Any variation observed in the data is just as likely to be due to specimen variation as to operator or laboratory testing variation.

13.1.2 Subcommittee D18 is seeking any data from the users of this test method that might be used to make a limited statement on precision.

13.1.3 *Bias*—There is no accepted reference value for this test method, therefore, bias cannot be determined.

14. Keywords

14.1 aggregate; consistency; index property; laboratory; moisture analysis; moisture content; soil; water content

[5] Supporting data have been filed at ASTM International Headquarters and may be obtained by requesting Research Report RR: D13–1108.

APPENDIX

(Nonmandatory Information)

X1. WATER CONTENT OF SOIL AND ROCK SAMPLE DATA SHEET

Project Name: _____ Project Number: _____

Test Method: X Method A
_____ Method B

Laboratory Number	04-725-S	04-726-S	04-727-S		
Boring Number	B-1	B-2	B-2		
Field Number	SPT-1	SPT-2	SPT-2a		
Container / Lid Number	725	726	727		
Container Mass, g M_c	770.1	731.7	770.6		
Container+Moist Specimen Mass, g M_{cms}	1895.3	2008.4	1827.9		
Date / Time In Oven	8/20/2004 0700	8/20/2004 0700	8/20/2004 0700		
Initial Container+Oven Dry Specimen Mass, g	1721.4	1872.1	1707.6		
Date / Time Out of Oven	8/20/2004 1200	8/20/2004 1200	8/20/2004 1200		
Secondary Container+Oven Dry Specimen Mass, g	1721.4	1801.2	1660.8		
Date / Time Out of Oven	–	8/20/2004 1600	8/20/2004 1600		
Final Container+Oven Dry Specimen Mass, g, M_{cds}	1721.4	1801.2	1660.8		
Date / Time Out of Oven	–	8/21/2004 0700	8/21/2004 0700		
Mass of Water, g, $M_w = M_{cms} - M_{cds}$	173.9	207.2	167.1		
Mass of Solids, g, $M_s = M_{cds} - M_c$	951.3	1069.5	890.2		
Water Content, %, $w = (M_w/M_s) \times 100$	18	19	19		
Unified Soil Classification Group Symbol (Visual)	GC	GC	GC		
Bold Approximate Maximimum Grain Size (Visual)	3 in., 1½ in., ¾ in., ⅜ in., #4, #10, < #10	3 in., 1½ in., ¾ in., ⅜ in., #4, #10, < #10	3 in., 1½ in., ¾ in., ⅜ in., #4, #10, < #10	3 in., 1½ in., ¾ in., ⅜ in., #4, #10, < #10	3 in., 1½ in., ¾ in., ⅜ in., #4, #10, < #10
Oven Temperature if Other Than 110°C	—	—	—		

Remarks: _____

_____

Tested By: _____ Date: _____ Checked By: _____

Dry Mass By: _____ Date: _____ Spot Checked: _____

Calculated By: _____ Date: _____ Reviewed By: _____

Copyright ASTM International

SUMMARY OF CHANGES

In accordance with Committee D18 policy, this section identifies the location of changes to this standard since the last edition (D 2216 – 98) that may impact the use of this standard.

(*1*) Footnote 2 was replaced with reference to Test Method D 4542. Subsequent footnotes were renumbered where necessary for sequential identification.
(*2*) Two new ASTM referenced documents were included in 1.6 to inform the user that less time-consuming processes are available.
(*3*) A new 1.7 was added to establish that two test methods (Method A and Method B) are provided in this standard. Subsequent Sections were renumbered where necessary for sequential identification.
(*4*) A new 1.9 was added to clarify the use of SI units as standard, and to conform to D18 Standards Preparation Manual Section 4.3.3. Subsequent Sections were renumbered where necessary for sequential identification.
(*5*) A new 1.10 was added as an information reference to Practice D 6026, and to conform to D18 Standards Preparation Manual Section 4.3.6. Subsequent Sections were renumbered where necessary for sequential identification.
(*6*) Five new ASTM referenced documents were added to, and one existing ASTM referenced document was deleted from section 2.1.
(*7*) Section 3.2 was renamed "Definitions of Terms."
(*8*) In section 3.2.1 the term "water content by mass" was redefined to correspond with its current definition in Terminology D 653.
(*9*) Section 3.3 "Definitions of Terms Specific to This Standard" was added.
(*10*) Section 3.3.1 was added, the term "constant dry mass" was defined to correspond with C 566, section 7.4.
(*11*) A new Note 2, referencing Practice D 3740, was added to Section 5 to conform to D18 Standards Preparation Manual section 4.3.5. Subsequent Notes were renumbered where necessary for sequential identification.
(*12*) Section 7.1 was revised to clarify the differences between the preservation and transportation of soil and rock samples.
(*13*) An information reference to Practice D 5079 was included in 7.1.
(*14*) Section 8.2 was revised, and Table 1 added to clarify specimen mass and balance readability requirements for Method A and Method B.
(*15*) Section 9.2.1 was revised to improve clarity.
(*16*) Section 10.4.1 was added incorporating former Note 7 as required text. This was revised to provide the user with guidelines for rapidly determining possible specimen dryness.
(*17*) Section 10.4.2 was added incorporating former Note 8 as required text.
(*18*) Section 10.5.1 was added incorporating former Note 9 as required text. It was edited to improve clarity, and to conform to section 10.5.
(*19*) Section 10.6 was added to indicate the addition of Appendix X1.
(*20*) The radical M_{cs} in Eq 1, and in the Eq 1 nomenclature legend was revised to M_{cds} to be consistent with the nomenclature used in the equations for calculating the values M_w and M_s.
(*21*) Section 12.1 was revised to follow the style and approach of ASTM D 854.
(*22*) Sections 13.1.1, 13.1.2 and 13.1.3 were revised to conform to D18 Standards Preparation Manual Table 3, Section 11.
(*23*) Appendix X1 (Water Content of Soil and Rock Sample Data Sheet) was added to conform to D18 Standards Preparation Manual 4.3.9.
(*24*) The Summary of Changes statement was updated to conform to D18 Standards Preparation Manual 9.9.1.

ASTM International takes no position respecting the validity of any patent rights asserted in connection with any item mentioned in this standard. Users of this standard are expressly advised that determination of the validity of any such patent rights, and the risk of infringement of such rights, are entirely their own responsibility.

This standard is subject to revision at any time by the responsible technical committee and must be reviewed every five years and if not revised, either reapproved or withdrawn. Your comments are invited either for revision of this standard or for additional standards and should be addressed to ASTM International Headquarters. Your comments will receive careful consideration at a meeting of the responsible technical committee, which you may attend. If you feel that your comments have not received a fair hearing you should make your views known to the ASTM Committee on Standards, at the address shown below.

This standard is copyrighted by ASTM International, 100 Barr Harbor Drive, PO Box C700, West Conshohocken, PA 19428-2959, United States. Individual reprints (single or multiple copies) of this standard may be obtained by contacting ASTM at the above address or at 610-832-9585 (phone), 610-832-9555 (fax), or service@astm.org (e-mail); or through the ASTM website (www.astm.org).

Copyright ASTM International

Designation: D 2937 – 04

Standard Test Method for Density of Soil in Place by the Drive-Cylinder Method[1]

This standard is issued under the fixed designation D 2937; the number immediately following the designation indicates the year of original adoption or, in the case of revision, the year of last revision. A number in parentheses indicates the year of last reapproval. A superscript epsilon (ϵ) indicates an editorial change since the last revision or reapproval.

This standard has been approved for use by agencies of the Department of Defense.

1. Scope*

1.1 This test method covers the determination of in-place density of soil by the drive-cylinder method. The test method involves obtaining a relatively undisturbed soil sample by driving a thin-walled cylinder and the subsequent activities for the determination of in-place density. When sampling or in-place density is required at depth, Test Method D 1587 should be used.

1.2 This test method is not appropriate for sampling organic soils which can compress upon sampling, very hard natural soils and heavily compacted soils which cannot be easily penetrated by the drive sampler, soils of low plasticity which will not be readily retained in the cylinder, or soils which contain appreciable amounts of gravel (particles coarser than 4.75 mm (3/16 in.)). The presence of particles coarser than 4.75 mm (3/16 in.) may introduce significant errors in density measurements by causing voids along the wall of the cylinder during driving, and when coarse materials have to be dislodged by the trimming of the sample obtained by the cylinder.

1.3 This test method is limited to the procedures necessary for obtaining specimens suitable for determining the in-place density and water content of certain soils. The procedures and precautions necessary for selecting locations and obtaining undisturbed samples suitable for laboratory testing or otherwise determining engineering properties is beyond the scope of this test method.

1.4 It is common practice in the engineering profession to concurrently use pounds to represent both a unit of mass (lbm) and a unit of force (lbf). This implicitly combines two separate systems of units, that is, the absolute system and the gravitational system. It is scientifically undesirable to combine the use of two separate sets of inch-pound units within a single standard. This test method has been written using the gravitational system of units when dealing with the inch-pound system. In this system the pound (lbf) represents a unit of force (weight). However, the use of balances or scales recording pounds of mass (lbm), or the recording of density in lbm/ft^3 should not be regarded as nonconformance with this test method.

1.5 All observed and calculated values shall conform to the guidelines for significant digits and rounding established in Practice D 6026.

1.6 The standard values stated in SI units are to be regarded as the standard. The values in parentheses are provided for information purposes only.

1.7 *This standard does not purport to address all of the safety concerns, if any, associated with its use. It is the responsibility of the user of this standard to establish appropriate safety and health practices and determine the applicability of regulatory limitations prior to use.*

2. Referenced Documents

2.1 *ASTM Standards:* [2]

D 653 Terminology Relating to Soil, Rock, and Contained Fluids

D 698 Test Method for Laboratory Compaction Characteristics of Soil Using Standard Effort (12,000 ft-lbf/ft (600 kN-m/m))

D 1557 Test Method for Laboratory Compaction Characteristics of Soil Using Modified Effort (56,000 ft-lbf/ft (2700 kN-m/m))

D 1587 Practice for Thin-Walled Tube Sampling of Soils

D 2216 Test Method for Laboratory Determination of Water (Moisture) Content of Soil and Rock

D 2488 Practice for Description and Identification of Soils for Engineering Practices (Visual-Manual Procedure)

D 3740 Practice for the Evaluation of Agencies Engaged in the Testing and/or Inspection of Soil and Rock as Used in Engineering Design and Construction

D 4643 Test Method for Determination of Water (Moisture) Content of Soil by the Microwave Oven Method

D 4753 Specification for Evaluating Selecting, and Specifying Balances and Scales for Use in Soil, Rock, and

[1] This test method is under the jurisdiction of ASTM Committee D18 on Soil and Rock and is the direct responsibility of Subcommittee D18.08 on Special and Construction Control Tests.

Current edition approved Nov. 1, 2004. Published December 2004. Originally approved in 1971. Last previous edition approved in 2000 as D 2937 – 00.

[2] For referenced ASTM standards, visit the ASTM website, www.astm.org, or contact ASTM Customer Service at service@astm.org. For *Annual Book of ASTM Standards* volume information, refer to the standard's Document Summary page on the ASTM website.

***A Summary of Changes section appears at the end of this standard.**

Copyright © ASTM International, 100 Barr Harbor Drive, PO Box C700, West Conshohocken, PA 19428-2959, United States.

Copyright ASTM International

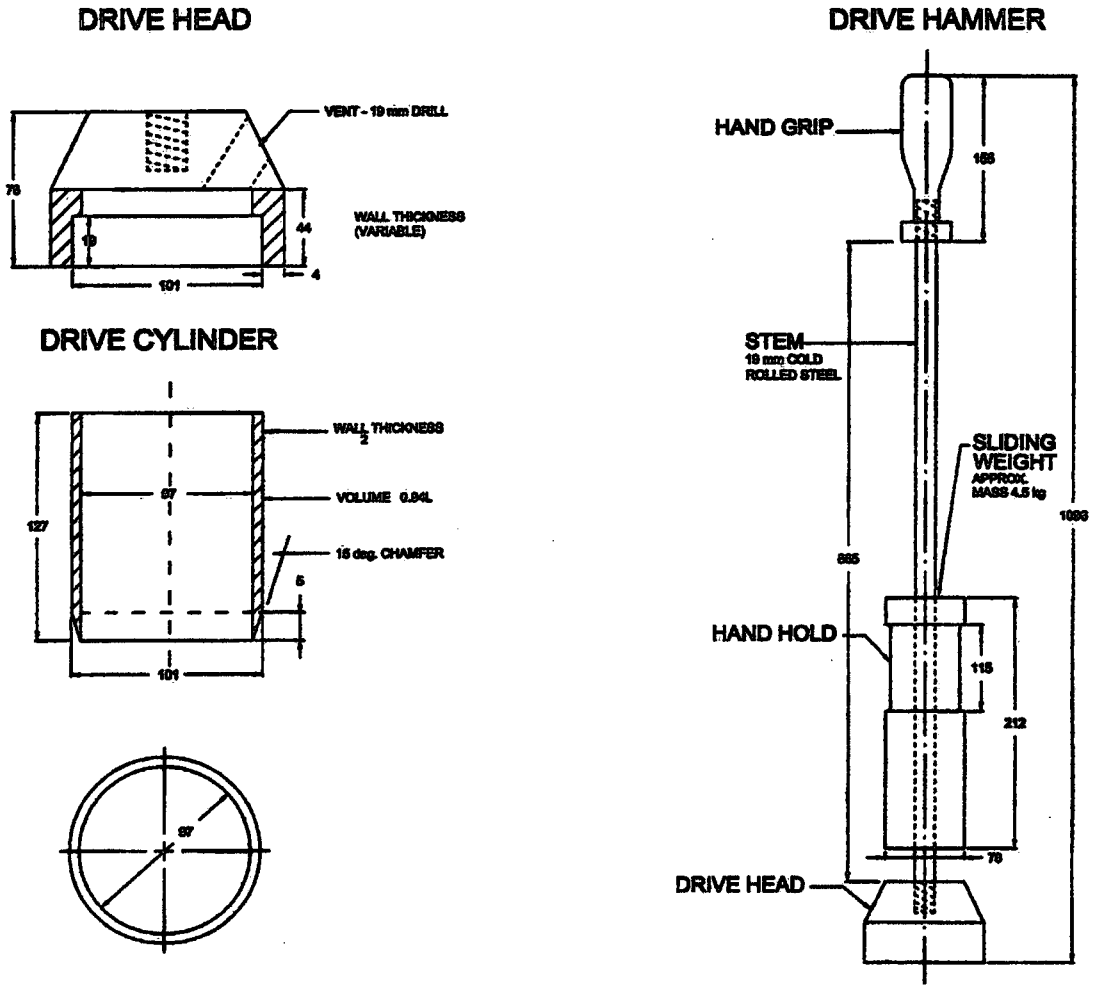

FIG. 1 Typical Design for a Surface Soil Sampler

TABLE 1 Dimensional Equivalent for Fig. 1

mm	in.	mm	in.
2	5/64	101.2	4
3.3	0.13	114.3	4½
4.8	3/16	127.0	5
19	¾	152.4	6
44.4	1¾	212.0	8 11/32
76	3	863.6	34
97.2	3 13/16	1117.6	44

Construction Materials Testing

D 4944 Test Method for Field Determination of Water (Moisture) Content of Soil by the Calcium Carbide Gas Pressure Tester Method

D 4959 Test Method for Determination of Water (Moisture) Content of Soil by Direct Heating Method

D 6026 Practice for Using Significant Digits in Geotechnical DAta

3. Terminology

3.1 *Definitions*—All definitions are in accordance with Terminology D 653.

4. Significance and Use

4.1 This test method can be used to determine the in-place density of natural, inorganic soils which do not contain significant amounts of particles coarser than 4.75 mm (3/16 in.), and which can be readily retained in the drive cylinder. This test method may also be used to determine the in-place density of compacted soils used in construction of structural fill, highway embankments, or earth dams. When the in-place density is to be used as a basis for acceptance, the drive cylinder volumes must be as large as practical and not less than 850 cm^3 (.03 ft^3).

4.2 This test method is not recommended for use in organic or friable soils. This test method may not be applicable for soft, highly plastic, noncohesive, saturated or other soils which are easily deformed, compress during sampling, or which may not be retained in the drive cylinder. The use of this test method in soils containing particles coarser than 4.75 mm (3/16 in.) may result in damage to the drive cylinder equipment. Soils

Copyright ASTM International

containing particles coarser than 4.75 mm (3/16 in.) may not yield valid results if voids are created along the wall of cylinder during driving, or if particles are dislodged from the sample ends during trimming.

4.3 The general principles of this test method have been successfully used to obtain samples of some field compacted fine-grained soils having a maximum particle size of 4.75 mm (3/16 in.) for purposes other than density determinations, such as the testing for engineering properties.

NOTE 1—Notwithstanding the statements on precision and bias contained in this standard: The precision of this test method is dependent on the competence of the personnel performing it and the suitability of the equipment and facilities used. Agencies which meet the criteria of Practice D 3740 are generally considered capable of competent and objective testing. Users of this method are cautioned that compliance with Practice D 3740 does not in itself assure reliable testing. Reliable testing depends on many factors; Practice D 3740 provides a means of evaluating some of those factors.

5. Apparatus

5.1 *Drive Cylinders*, of approximately 102 to 152 mm (4 to 6 in.) diameter or larger. Typical details of drive cylinders with outside diameters of 102 mm are shown in Fig. 1. Drive cylinders of other diameters will require proportional changes in the drive-cylinder tube and drive-head dimensions. The volume of the cylinders with the dimensions shown in Fig. 1 is approximately 942 cm^3(0.033 ft^3). The apparatus shown in Fig. 1 is of a design suitable for use at or near the surface.

5.1.1 When the in-place density is to be used as a basis for acceptance of compacted fill, the cylinders shall be as large as practical to minimize the effects of errors and shall in no case be smaller than 850 cm^3(0.03 ft^3).

5.1.2 The number of cylinders required depends on the number of samples to be taken and the anticipated rapidity by which the cylinders can be returned to service after weighing, cleaning, etc.

5.1.3 The cylinders shown in Fig. 1 meet the clearance ratio, wall thickness and area-ratio requirements as set forth by Hvorslev[3] for drive samplers, and should preferably not exceed 10 to 15 %, as defined by the following:

$$A_r = [(D_e^2 - D_i^2)/D_i^2] \times 100 \quad (1)$$

where:

A_r = area ratio, %,
D_e = maximum external diameter of the drive sampler, and
D_i = minimum internal diameter of the drive sampler at the cutting edge.

5.1.4 Except for very short samplers with no clearance, the inside clearance ratio of the cylinders should be 1 % or greater, with increasing ratios with the increase in plasticity of the soil being sampled. Inside clearance ratio is defined by the following:

$$C_r = \frac{D_i - D_e}{D_e} \quad (2)$$

where:

C_r = inside clearance ratio, %
D_e = effective (minimum) inside diameter of the sampler at the cutting edge, after swaging, and
D_i = internal diameter of the sampler.

5.1.5 Cylinders of other diameters should conform to these requirements.

5.2 *Drive Head*—The typical details of the drive heads and appurtenances are shown in Fig. 1. The drive head has a sliding weight for driving the cylinder.

5.3 *Straightedge*, steel, approximately 3 mm (1/8 in.) by 38 mm (1½ in.) by 305 mm (12 in.) with one edge sharpened at approximately a 45° angle for trimming the ends of the sample flush with the cylinder.

5.4 *Shovel*—Any one of several types of shovels or spades is satisfactory in shallow sampling for digging the cylinders out after they have been driven into the soil.

5.5 *Balances*—A balance having a minimum capacity of 1 kg and meeting the requirements of Specification D 4753 for a balance of 1 g readability is required for the cylinders shown in Fig. 1. Larger cylinders will require a balance of 20 kg capacity with readability of 0.1 %.

5.6 *Drying Equipment*—Equipment or ovens, or both, to determine water (moisture) content in compliance with Test Methods D 2216, D 4643, D 4944, or D 4959.

5.7 *Miscellaneous Equipment*—Brushes, sledgehammers, plastic bags, metal cans with lids, or other suitable containers for retaining the drive cylinder and sample until determination of mass and drying, spoons, inside/outside vernier caliper, or the equivalent accurate to 0.0025 mm (0.01 in.) for calibration, gloves, and safety glasses.

6. Sampling

6.1 *Sampling at or Near the Surface*:

6.1.1 Brush all loose particles from the surface. For near-surface sampling (not more than 1 m (36 in.) in depth), sample through a hole bored with an auger or dug by a shovel from which loosened material has been removed. Obtain a fairly level surface before any cylinder is driven. Depending on the soil texture and moisture, the surface may be prepared utilizing a bulldozer blade or other heavy equipment blades provided the sample area and vicinity are not deformed, compressed, torn, or otherwise disturbed.

6.1.2 Assemble the cylinder and drive apparatus with the sharpened edge on the surface to be sampled. Drive the cylinder by raising the drop hammer and allowing it to fall, or alternatively by applying a uniform force via a jack or similar device, while keeping the drive rod steady and in a vertical position. Continue driving until the top of the cylinder is approximately 13 mm (½ in.) below the original surface. Overdriving may result in deforming or compressing the sample and may provide erroneous results. Care should be taken to prevent overdriving, particularly when sampling below the surface. If overdriving occurs or is suspected, the sample should be discarded and the soil resampled. Remove the drive head and dig the cylinder from the ground with a shovel, digging the soil from around the sides of the cylinder and undercutting several inches below the bottom of the cylinder before lifting the cylinder out. When sampling near,

[3] Hvorslev, M. J., "Surface Exploration and Sampling of Soils for Engineering Purposes," Engineering Foundation, 345 E. 47th St., New York, NY 10017.

Copyright ASTM International

but below, the surface, use the same procedure, but more soil will necessarily have to be dug from around the sides of the cylinder to properly undercut the cylinder.

6.1.3 After the cylinder has been removed from the ground, trim any excess soil from the sides of the cylinder. Using the straightedge, trim the ends of the sample flush and plane with the ends of the cylinder. A satisfactory sample is composed of relatively undisturbed soil representative of the soil in place and shall not contain rocks, roots, or other foreign material. If the cylinder is not full or is not representative, discard the sample and take another sample. If the cylinder is deformed or otherwise damaged while driving it into or removing it from the ground, discard the sample and repair or replace the cylinder. Immediately determine the mass of the sample and determine the water content or place the drive cylinder and sample in a container which will prevent soil or water loss until mass and water determinations can be made.

7. Calibration

7.1 Before testing begins and periodically thereafter, or when damage is suspected, check the cutting edge of the drive cylinders (dulled or damaged cylinders may be resharpened and reswaged or discarded).

7.1.1 Before testing and periodically thereafter, determine the mass and volume of each cylinder. Determine and record the mass accurately to the nearest 1 g. Determine the volume of each cylinder by measuring the height and the swaged-end diameter at four equally spaced points to 0.254 mm (0.01 in.) and average the respective dimensions. Calculate and record the volume to the nearest 0.16 mm^3(0.01 $in.^3$).

7.2 Permanently identify each cylinder by a number or symbol traceable to the calibration data. It may be desirable in some cases to show the mass and volume on the cylinder along with the identification.

8. Procedure

8.1 Determine the mass of the drive cylinder and soil sample to the nearest 1 g and record.

8.2 Remove the soil from the cylinder. Obtain a representative specimen for water content determination, or use the entire sample. Specimens for determining water content are to be as large as practical but in no case smaller than 100 g and selected in such a way so as to represent all the material from the cylinder. Determine the water content of the soil in accordance with either Test Methods D 2216, D 4643, D 4944, or D 4959.

9. Calculation

9.1 The in-place dry density of the soil is expressed as the mass of the dry soil divided by the volume of soil, and is usually reported in kilograms per cubic meter or pounds per cubic foot.

9.2 Calculate the dry mass of the drive-cylinder sample, M_3, in grams, as follows:

$$M_3 = [(M_1 - M_2)/(100 + w)] \times 100 \quad (3)$$

where:

M_1 = mass of the cylinder and wet soil sample, g,
M_2 = mass of the cylinder, g, and
w = water content, %, dry mass basis.

9.3 Calculate the dry density, ρ_d, of the drive-cylinder sample in g/cm^3 as follows:

$$\rho_d = (M_3/V) \quad (4)$$

where:

V = volume of the drive cylinder, cm^3 (to the nearest 0.01 cm^3)

NOTE 2—It may be desired to express the in-place density as a percentage of some other density, for example, the laboratory maximum density, determined in accordance with Test Method D 698. This relation can be determined by dividing the in-place density by the maximum density and multiplying by 100.

10. Data Sheet(s)/Form(s)

10.1 Report the following information:

10.1.1 Location,

10.1.2 Depth below ground surface or elevation of surface, or both,

10.1.3 Dry density,

10.1.4 Water content and the test method used,

10.1.5 Dimensions and volume of the sampler,

10.1.6 Visual description of the soil sample, and

10.1.7 Comments on soil sample disturbance.

10.2 If the in-place dry density or unit weight is expressed as a percentage of another value, or used as a basis for acceptance of compacted fill, include the following:

10.2.1 Volume of the drive cylinder used,

10.2.2 The comparative dry density or unit weight value and water content used,

10.2.3 The method used to determine the comparative values,

10.2.4 The comparative percentage of the in-place material to the comparison value, and

10.2.5 The acceptance criteria applicable to the test.

11. Precision and Bias

11.1 The precision of this test method is operator dependent and a function of the care exercised in performing the steps of the procedure, giving particular attention to careful control and systematic repetition of the procedure used. While no standard soils exist, limited studies running repetitive adjacent tests on the same soil using 7.3 cm (2⅞ in.) inside diameter cylinders, have indicated standard deviations of 32 kg/m^3(2.00 lb/ft^3) to 46.4 kg/cm^3(2.90 lb/ft^3) for soils with a compacted wet density ranging from 2022 kg/cm^3(126.2 lb/ft^3) to 2154 kg/m^3(134.5 lb/ft^3).[4]

In another study, running repetitive adjacent tests on the same soil using a 13.0 cm (5⅛ in.) inside diameter cylinder, a standard deviation of 31 kg/m^3(1.93 lb/ft^3) was obtained for soil with a compacted wet density of about 2000 kg/m^3(125

[4] Noorany, I., Gardener, W.S., Corley, D.J., and Brown, J.L., "Variability in Field Density Tests," *Constructing and Controlling Compaction of Earth Fills*, ASTM STP 1384, March 2000.

Copyright ASTM International

lb/ft^3).[5] In general, a lower standard deviation should be expected with a larger diameter drive cylinder.

11.2 There are no absolute values of in-place density for soils against which this test method can be compared. Therefore this test method has no determinable bias since the values obtained can only be defined in terms of the test method.

11.3 Subcommittee D18.08 is seeking pertinent data from users of this test method on precision.

12. Keywords

12.1 compaction control; density testing; drive cylinder; drive cylinder test; field density; in-place density; plug sampler; quality control; subsurface sampler; surface sampler; unit weight

[5] McCook, D. K., and Shanklin, D., "Nuclear Density Testing and Comparisons with Sand Cone and Calibrated Cylinder Methods," *Constructing and Controlling Compaction of Earth Fills*, ASTM STP 1384, March 2000.

SUMMARY OF CHANGES

(1) Added Section 1.5 and renumbered.
(2) Fixed some grammatical mistakes
(3) Added D 6026 to Referenced Documents Section.
(4) Updated Summary of Changes Section.

ASTM International takes no position respecting the validity of any patent rights asserted in connection with any item mentioned in this standard. Users of this standard are expressly advised that determination of the validity of any such patent rights, and the risk of infringement of such rights, are entirely their own responsibility.

This standard is subject to revision at any time by the responsible technical committee and must be reviewed every five years and if not revised, either reapproved or withdrawn. Your comments are invited either for revision of this standard or for additional standards and should be addressed to ASTM International Headquarters. Your comments will receive careful consideration at a meeting of the responsible technical committee, which you may attend. If you feel that your comments have not received a fair hearing you should make your views known to the ASTM Committee on Standards, at the address shown below.

This standard is copyrighted by ASTM International, 100 Barr Harbor Drive, PO Box C700, West Conshohocken, PA 19428-2959, United States. Individual reprints (single or multiple copies) of this standard may be obtained by contacting ASTM at the above address or at 610-832-9585 (phone), 610-832-9555 (fax), or service@astm.org (e-mail); or through the ASTM website (www.astm.org).

Copyright ASTM International

Designation: D 4318 – 05

Standard Test Methods for Liquid Limit, Plastic Limit, and Plasticity Index of Soils[1]

This standard is issued under the fixed designation D 4318; the number immediately following the designation indicates the year of original adoption or, in the case of revision, the year of last revision. A number in parentheses indicates the year of last reapproval. A superscript epsilon (ε) indicates an editorial change since the last revision or reapproval.

This standard has been approved for use by agencies of the Department of Defense.

1. Scope*

1.1 These test methods cover the determination of the liquid limit, plastic limit, and the plasticity index of soils as defined in Section 3 on Terminology.

1.2 Two methods for preparing test specimens are provided as follows: *Wet preparation method,* as described in 10.1. *Dry preparation method,* as described in 10.2. The method to be used shall be specified by the requesting authority. If no method is specified, use the wet preparation method.

1.2.1 The liquid and plastic limits of many soils that have been allowed to dry before testing may be considerably different from values obtained on non-dried samples. If the liquid and plastic limits of soils are used to correlate or estimate the engineering behavior of soils in their natural moist state, samples should not be permitted to dry before testing unless data on dried samples are specifically desired.

1.3 Two methods for determining the liquid limit are provided as follows: *Method A,* Multipoint test as described in Sections 11 and 12. *Method B,* One-point test as described in Sections 13 and 14. The method to be used shall be specified by the requesting authority. If no method is specified, use Method A.

1.3.1 The multipoint liquid limit method is generally more precise than the one-point method. It is recommended that the multipoint method be used in cases where test results may be subject to dispute, or where greater precision is required.

1.3.2 Because the one-point method requires the operator to judge when the test specimen is approximately at its liquid limit, it is particularly not recommended for use by inexperienced operators.

1.3.3 The correlation on which the calculations of the one-point method are based may not be valid for certain soils, such as organic soils or soils from a marine environment. It is strongly recommended that the liquid limit of these soils be determined by the multipoint method.

1.4 The plastic limit test is performed on material prepared for the liquid limit test.

1.5 The liquid limit and plastic limit of soils (along with the shrinkage limit) are often collectively referred to as the Atterberg limits. These limits distinguished the boundaries of the several consistency states of plastic soils.

1.6 The composition and concentration of soluble salts in a soil affect the values of the liquid and plastic limits as well as the water content values of soils (see Method D 2216). Special consideration should therefore be given to soils from a marine environment or other sources where high soluble salt concentrations may be present. The degree to which the salts present in these soils are diluted or concentrated must be given careful consideration.

1.7 The methods described herein are performed only on that portion of a soil that passes the 425-μm (No. 40) sieve. Therefore, the relative contribution of this portion of the soil to the properties of the sample as a whole must be considered when using these tests to evaluate properties of a soil.

1.8 The values stated in acceptable metric units are to be regarded as the standard, except as noted below. The values given in parentheses are for information only.

1.8.1 The standard units for the resilience tester covered in Annex A1 are inch-pound, not metric. The metric values given are for information only.

1.9 *This standard does not purport to address all of the safety concerns, if any, associated with its use. It is the responsibility of the user of this standard to establish appropriate safety and health practices and determine the applicability of regulatory limitations prior to use.*

2. Referenced Documents

2.1 *ASTM Standards:* [2]

C 702 Practice for Reducing Field Samples of Aggregate to Testing Size

D 75 Practice for Sampling Aggregates

D 420 Guide to Site Characterization for Engineering, Design, and Construction Purposes

D 653 Terminology Relating to Soil, Rock, and Contained Fluids

[1] This standard is under the jurisdiction of ASTM Committee D18 on Soil and Rock and is the direct responsibility of Subcommittee D18.03 on Texture, Plasticity and Density Characteristics of Soils.

Current edition approved March 1, 2005. Published April 2005. Originally approved in 1983. Last previous edition approved in 2000 as D 4318 – 00.

[2] For referenced ASTM standards, visit the ASTM website, www.astm.org, or contact ASTM Customer Service at service@astm.org. For *Annual Book of ASTM Standards* volume information, refer to the standard's Document Summary page on the ASTM website.

***A Summary of Changes section appears at the end of this standard.**

Copyright © ASTM International, 100 Barr Harbor Drive, PO Box C700, West Conshohocken, PA 19428-2959, United States.

Copyright ASTM International

D 1241 Specification for Materials for Soil-Aggregate Subbase, Base, and Surface Courses
D 2216 Test Method for Laboratory Determination of Water (Moisture) Content of Soil and Rock by Mass
D 2487 Practice for Classification of Soils for Engineering Purposes (Unified Soil Classification System)
D 3282 Practice for Classification of Soils and Soil-Aggregate Mixtures for Highway Construction Purposes
D 3740 Practice for Minimum Requirements for Agencies Engaged in the Testing and/or Inspection of Soil and Rock as Used in Engineering Design and Construction
D 4753 Specification for Evaluating, Selecting, and Specifying Balances and Scales for Use in Soil, Rock, and Related Construction Materials Testing
D 6026 Practice for Using Significant Digits in Geotechnical Data
E 11 Specification for Wire-Cloth Sieves for Testing Purposes
E 177 Practice for Use of the Terms Precision and Bias in ASTM Test Methods
E 691 Practice for Conducting an Interlaboratory Study to Determine the Precision of a Test Method

3. Terminology

3.1 *Definitions:*

3.1.1 For common definitions of terms in this standard, refer to Terminology D 653.

3.1.2 *Atterberg Limits*—Originally, six "limits of consistency" of fine-grained soils were defined by Albert Atterberg: the upper limit of viscous flow, the liquid limit, the sticky limit, the cohesion limit, the plastic limit, and the shrinkage limit. In current engineering usage, the term usually refers only to the liquid limit, plastic limit, and in some references, the shrinkage limit.

3.1.3 *consistency*—the relative ease with which a soil can be deformed.

3.1.4 *liquid limit (LL, w_L)*—the water content, in percent, of a soil at the arbitrarily defined boundary between the semi-liquid and plastic states.

3.1.4.1 *Discussion*—The undrained shear strength of soil at the liquid limit is considered to be approximately 2 kPa (0.28 psi).

3.1.5 *plastic limit (PL, w_p)*—the water content, in percent, of a soil at the boundary between the plastic and semi-solid states.

3.1.6 *plastic soil*—a soil which has a range of water content over which it exhibits plasticity and which will retain its shape on drying.

3.1.7 *plasticity index (PI)*—the range of water content over which a soil behaves plastically. Numerically, it is the difference between the liquid limit and the plastic limit.

3.1.8 *liquidity index*—the ratio, expressed as a percentage of (1) the water content of a soil minus its plastic limit, to (2) its plasticity index.

3.1.9 *activity number (A)*—the ratio of (1) the plasticity index of a soil to (2) the percent by mass of particles having an equivalent diameter smaller than 2 µm.

4. Summary of Test Method

4.1 The specimen is processed to remove any material retained on a 425-µm (No. 40) sieve. The liquid limit is determined by performing trials in which a portion of the specimen is spread in a brass cup, divided in two by a grooving tool, and then allowed to flow together from the shocks caused by repeatedly dropping the cup in a standard mechanical device. The multipoint liquid limit, Method A, requires three or more trials over a range of water contents to be performed and the data from the trials plotted or calculated to make a relationship from which the liquid limit is determined. The one-point liquid limit, Method B, uses the data from two trials at one water content multiplied by a correction factor to determine the liquid limit.

4.2 The plastic limit is determined by alternately pressing together and rolling into a 3.2-mm (⅛-in.) diameter thread a small portion of plastic soil until its water content is reduced to a point at which the thread crumbles and can no longer be pressed together and re-rolled. The water content of the soil at this point is reported as the plastic limit.

4.3 The plasticity index is calculated as the difference between the liquid limit and the plastic limit.

5. Significance and Use

5.1 These test methods are used as an integral part of several engineering classification systems to characterize the fine-grained fractions of soils (see Practices D 2487 and D 3282) and to specify the fine-grained fraction of construction materials (see Specification D 1241). The liquid limit, plastic limit, and plasticity index of soils are also used extensively, either individually or together, with other soil properties to correlate with engineering behavior such as compressibility, hydraulic conductivity (permeability), compactibility, shrink-swell, and shear strength.

5.2 The liquid and plastic limits of a soil and its water content can be used to express its relative consistency or liquidity index. In addition, the plasticity index and the percentage finer than 2-µm particle size can be used to determine its activity number.

5.3 These methods are sometimes used to evaluate the weathering characteristics of clay-shale materials. When subjected to repeated wetting and drying cycles, the liquid limits of these materials tend to increase. The amount of increase is considered to be a measure of a shale's susceptibility to weathering.

5.4 The liquid limit of a soil containing substantial amounts of organic matter decreases dramatically when the soil is oven-dried before testing. Comparison of the liquid limit of a sample before and after oven-drying can therefore be used as a qualitative measure of organic matter content of a soil (see Practice D 2487).

NOTE 1—The quality of the result produced by this standard is dependent on the competence of the personnel performing it and the suitability of the equipment and facilities used. Agencies that meet the criteria of Practice D 3740, generally, are considered capable of competent and objective testing/sampling/inspection/etc. Users of this standard are cautioned that compliance with Practice D 3740 does not in itself assure reliable results. Reliable results depend on many factors; Practice D 3740 provides a means of evaluating some of those factors.

Copyright ASTM International

6. Apparatus

6.1 *Liquid Limit Device*—A mechanical device consisting of a brass cup suspended from a carriage designed to control its drop onto a hard rubber base. Fig. 1 shows the essential features and critical dimensions of the device. The device may be operated by either a hand crank or electric motor.

6.1.1 *Base*—A hard rubber base having a Type D Durometer hardness of 80 to 90, and resilience rebound of at least 77 % but no more than 90 %. Conduct resilience tests on the finished base with the feet attached. Details for measuring the resilience of the base are given in Annex A1.

6.1.2 *Rubber Feet,* supporting the base, designed to provide isolation of the base from the work surface, and having a Type A Durometer hardness no greater than 60 as measured on the finished feet attached to the base.

6.1.3 *Cup,* brass, with a mass, including cup hanger, of 185 to 215 g.

6.1.4 *Cam*—Designed to raise the cup smoothly and continuously to its maximum height, over a distance of at least 180° of cam rotation, without developing an upward or downward velocity of the cup when the cam follower leaves the cam. (The preferred cam motion is a uniformly accelerated lift curve.)

NOTE 2—The cam and follower design in Fig. 1 is for uniformly accelerated (parabolic) motion after contact and assures that the cup has no velocity at drop off. Other cam designs also provide this feature and may be used. However, if the cam-follower lift pattern is not known, zero velocity at drop off can be assured by carefully filing or machining the cam and follower so that the cup height remains constant over the last 20 to 45° of cam rotation.

6.1.5 *Carriage,* constructed in a way that allows convenient but secure adjustment of the height-of-drop of the cup to 10 mm (0.394 in.), and designed such that the cup and cup hanger assembly is only attached to the carriage by means of a removable pin. See Fig. 2 for definition and determination of the height-of-drop of the cup.

6.1.6 *Motor Drive (Optional)*—As an alternative to the hand crank shown in Fig. 1, the device may be equipped with a motor to turn the cam. Such a motor must turn the cam at 2 ± 0.1 revolutions per second and must be isolated from the rest of the device by rubber mounts or in some other way that prevents vibration from the motor being transmitted to the rest of the apparatus. It must be equipped with an ON-OFF switch and a means of conveniently positioning the cam for height-of-drop adjustments. The results obtained using a motor-driven device must not differ from those obtained using a manually operated device.

6.2 *Flat Grooving Tool*—A tool made of plastic or noncorroding-metal having the dimensions shown in Fig. 3. The design of the tool may vary as long as the essential dimensions are maintained. The tool may, but need not, incorporate the gage for adjusting the height-of-drop of the liquid limit device.

NOTE 3—Prior to the adoption of this test method, a curved grooving tool was specified as part of the apparatus for performing the liquid limit test. The curved tool is not considered to be as accurate as the flat tool

DIMENSIONS

LETTER	A△	B△	C△	E△	F	G	H	J△	K△	L△	M△
MM	54 ± 0.5	2 ± 0.1	27 ± 0.5	56 ± 2.0	32	10	16	60 ± 1.0	50 ± 2.0	150 ± 2.0	125 ± 2.0

LETTER	N	P	R	T	U△	V	W	Z
MM	24	28	24	45	47 ± 1.0	3.8	13	6.5

△ ESSENTIAL DIMENSIONS

CAM ANGLE DEGREES	CAM RADIUS
0	0.742 R
30	0.753 R
60	0.764 R
90	0.773 R
120	0.784 R
150	0.796 R
180	0.818 R
210	0.854 R
240	0.901 R
270	0.945R
300	0.974R
330	0.995R
360	1.000R

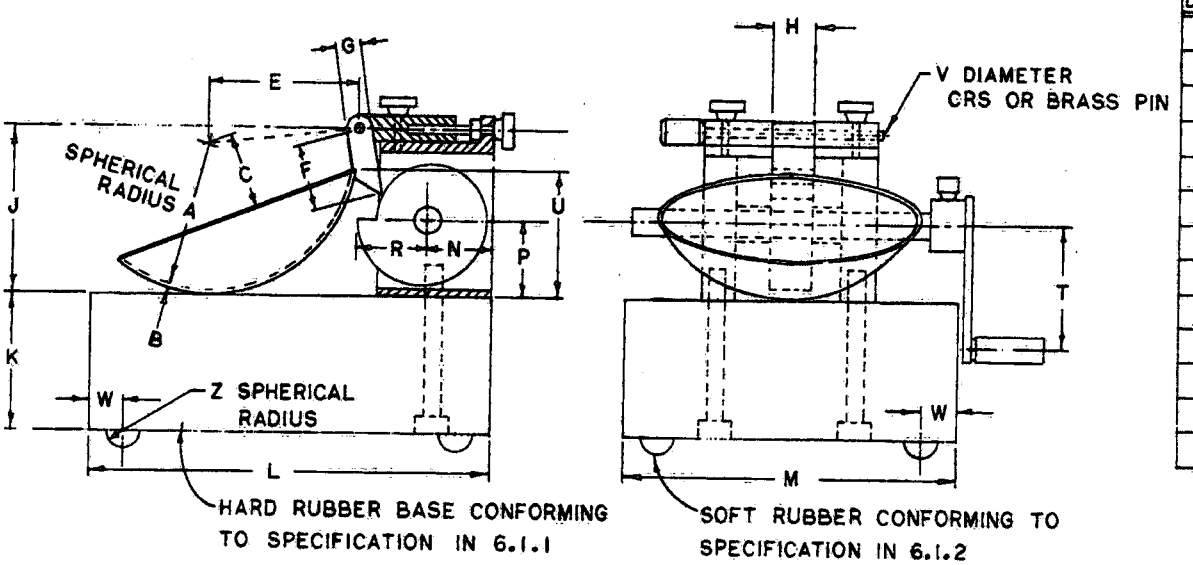

FIG. 1 Hand-Operated Liquid Limit Device

Copyright ASTM International

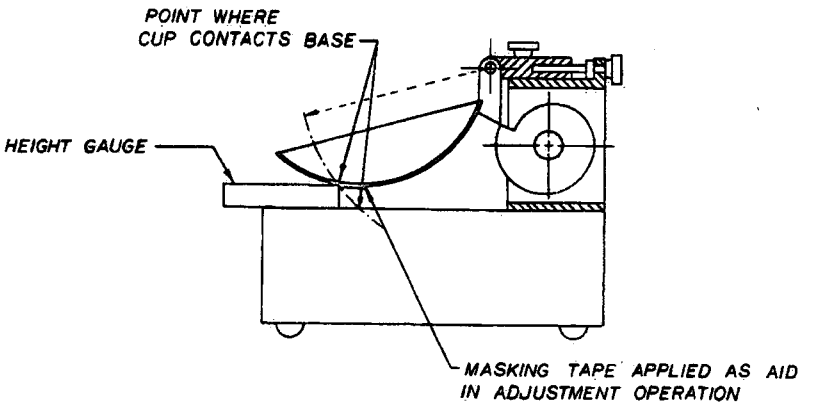

FIG. 2 Calibration for Height-of-Drop

DIMENSIONS

LETTER	A△	B△	C△	D△	E△	F△
MM	2 ± 0.1	11 ± 0.2	40 ± 0.5	8 ± 0.1	50 ± 0.5	2 ± 0.1
LETTER	G	H	J	K△	L△	N
MM	10 MINIMUM	13	60	10 ±0.05	60 DEG ± 1 DEG	20

△ ESSENTIAL DIMENSIONS

□ BACK AT LEAST 15 MM FROM TIP

NOTE: DIMENSION A SHOULD BE 1.9–2.0 AND DIMENSION D SHOULD BE 8.0–8.1 WHEN NEW TO ALLOW FOR ADEQUATE SERVICE LIFE

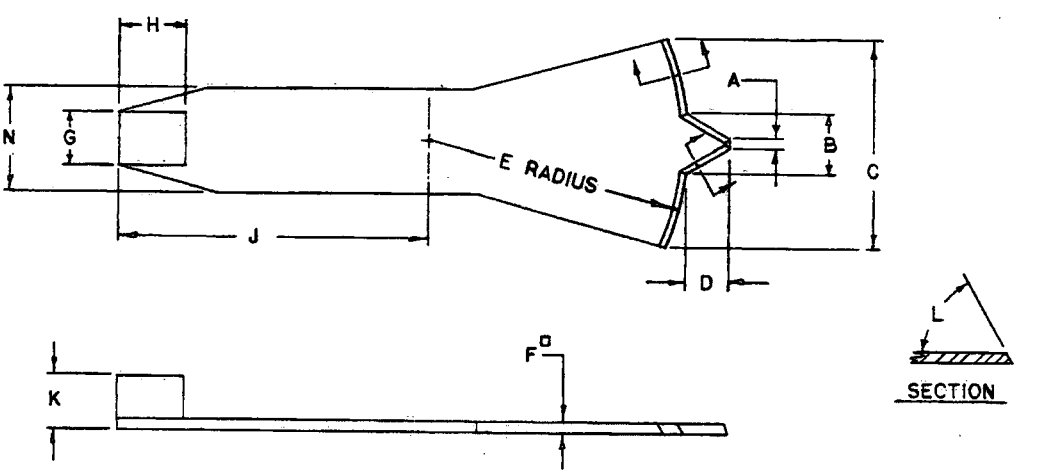

FIG. 3 Grooving Tool (Optional Height-of-Drop Gage Attached)

described in 6.2 since it does not control the depth of the soil in the liquid limit cup. However, there are some data which indicate that typically the liquid limit is slightly increased when the flat tool is used instead of the curved tool.

6.3 *Gage*—A metal gage block for adjusting the height-of-drop of the cup, having the dimensions shown in Fig. 4. The design of the tool may vary provided the gage will rest securely on the base without being susceptible to rocking, and the edge which contacts the cup during adjustment is straight, at least 10 mm (⅜ in.) wide, and without bevel or radius.

6.4 *Water Content Containers*—Small corrosion-resistant containers with snug-fitting lids for water content specimens. Aluminum or stainless steel cans 2.5 cm (1 in.) high by 5 cm (2 in.) in diameter are appropriate.

6.5 *Balance,* conforming to Specification D 4753, Class GP1 (readability of 0.01 g).

6.6 *Mixing and Storage Container*—A container to mix the soil specimen (material) and store the prepared material. During mixing and storage, the container shall not contaminate the material in any way, and prevent moisture loss during

Copyright ASTM International

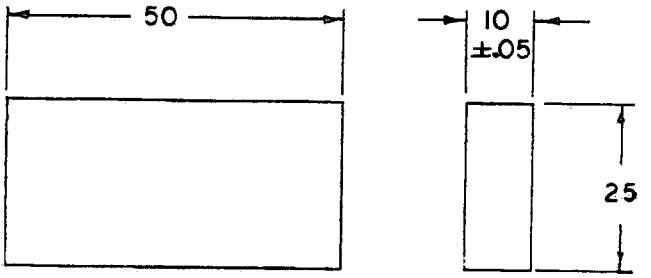

DIMENSIONS IN MILLIMETRES
FIG. 4 Height-of-Drop Gage

storage. A porcelain, glass, or plastic dish about 11.4 cm (4½ in.) in diameter and a plastic bag large enough to enclose the dish and be folded over is adequate.

6.7 *Plastic Limit:*

6.7.1 *Ground Glass Plate*—A ground glass plate at least 30 cm (12 in.) square by 1 cm (⅜ in.) thick for rolling plastic limit threads.

6.7.2 *Plastic Limit-Rolling Device (optional)*—A device made of acrylic conforming to the dimensions shown in Fig. 5.[3,4] The type of unglazed paper attached to the top and bottom plate (see 16.2.2) shall be such that it does not add foreign matter (fibers, paper fragments, etc.) to the soil during the rolling process.

[3] The plastic limit-rolling device is covered by a patent (U.S. Patent No. 5,027,660).[7] Interested parties are invited to submit information regarding the identification of an alternative(s) to this patented item to ASTM Headquarters. Your comments will receive careful consideration at a meeting of the responsible subcommittee, which you may attend.

[4] Bobrowski, L. J., Jr. and Griekspoor, D. M., "Determination of the Plastic Limit of a Soil by Means of a Rolling Device," *Geotechnical Testing Journal*, GTJODJ, Vol 15, No. 3, September 1992, pp. 284–287.

6.8 *Spatula*—A spatula or pill knife having a blade about 2 cm (¾ in.) wide, and about 10 to 13 cm (3 to 4 in.) long.

6.9 *Sieve(s)*—A 200-mm (8-in.) diameter, 425-µm (No. 40) sieve conforming to the requirements of Specification E 11 and having a rim at least 5 cm (2 in.) above the mesh. A 2.00-mm (No. 10) sieve meeting the same requirements may also be needed.

6.10 *Wash Bottle,* or similar container for adding controlled amounts of water to soil and washing fines from coarse particles.

6.11 *Drying Oven,* thermostatically controlled, preferably of the forced-draft type, capable of continuously maintaining a temperature of 110 ± 5°C (230 ± 9°F) throughout the drying chamber.

6.12 *Washing Pan,* round, flat-bottomed, at least 7.6 cm (3 in.) deep, and slightly larger at the bottom than a 20.3-cm (8-in.) diameter sieve.

7. Reagents and Materials

7.1 *Purity of Water*—Where distilled water is referred to in this test method, either distilled or demineralized water may be used. See Note 7 covering the use of tap water.

8. Sampling and Specimen

8.1 Samples may be taken from any location that satisfies testing needs. However, Practices C 702, D 75, and D 420 should be used as guides for selecting and preserving samples from various types of sampling operations. Samples in which specimens will be prepared using the wet-preparation method (10.1) must be kept at their as–sampled water content prior to preparation.

8.1.1 Where sampling operations have preserved the natural stratification of a sample, the various strata must be kept separated and tests performed on the particular stratum of

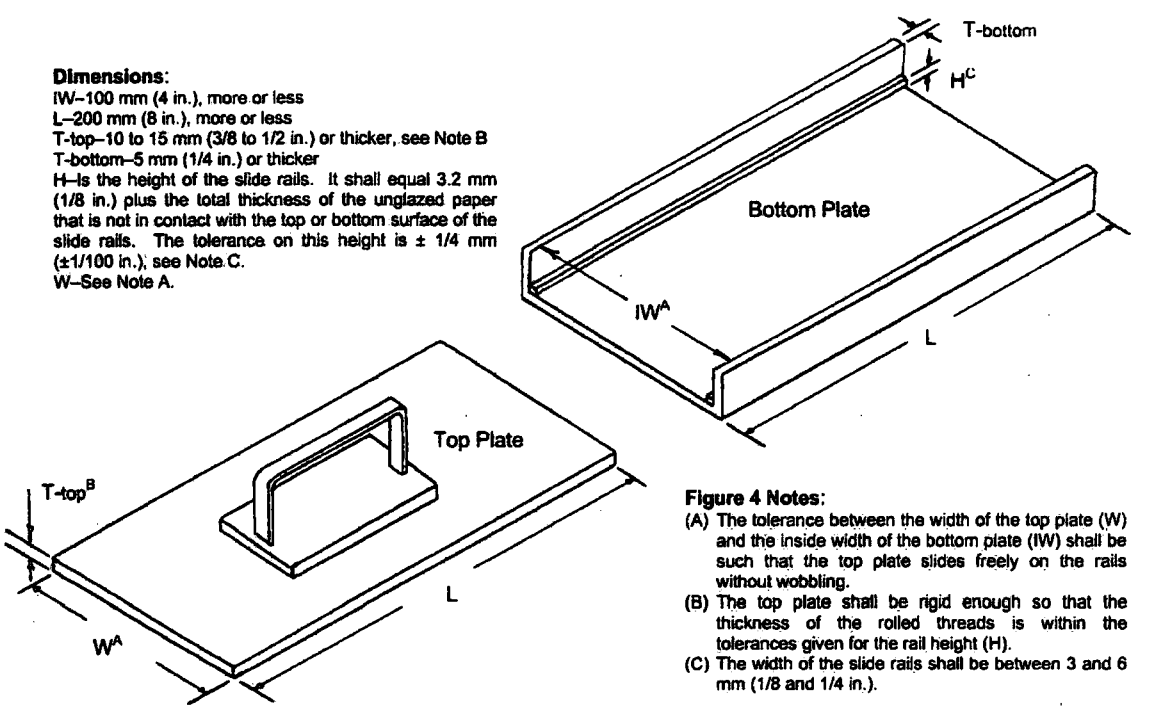

Figure 4 Notes:
(A) The tolerance between the width of the top plate (W) and the inside width of the bottom plate (IW) shall be such that the top plate slides freely on the rails without wobbling.
(B) The top plate shall be rigid enough so that the thickness of the rolled threads is within the tolerances given for the rail height (H).
(C) The width of the slide rails shall be between 3 and 6 mm (1/8 and 1/4 in.).

FIG. 5 Plastic Limit-Rolling Device

interest with as little contamination as possible from other strata. Where a mixture of materials will be used in construction, combine the various components in such proportions that the resultant sample represents the actual construction case.

8.1.2 Where data from these test methods are to be used for correlation with other laboratory or field test data, use the same material as used for those tests where possible.

8.2 *Specimen*—Obtain a representative portion from the total sample sufficient to provide 150 to 200 g of material passing the 425-µm (No. 40) sieve. Free flowing samples (materials) may be reduced by the methods of quartering or splitting. Non-free flowing or cohesive materials shall be mixed thoroughly in a pan with a spatula or scoop and a representative portion scooped from the total mass by making one or more sweeps with a scoop through the mixed mass.

9. Calibration of Apparatus

9.1 *Inspection of Wear:*

9.1.1 *Liquid Limit Device*—Determine that the liquid limit device is clean and in good working order. Check the following specific points.

9.1.1.1 *Wear of Base*—The spot on the base where the cup makes contact should be worn no greater than 10 mm (⅜ in.) in diameter. If the wear spot is greater than this, the base can be machined to remove the worn spot provided the resurfacing does not make the base thinner than specified in 6.1 and the other dimensional relationships are maintained.

9.1.1.2 *Wear of Cup*—Replace the cup when the grooving tool has worn a depression in the cup 0.1 mm (0.004 in.) deep or when the rim of the cup has been reduced to half its original thickness. Verify that the cup is firmly attached to the cup hanger.

9.1.1.3 *Wear of Cup Hanger*—Verify that the cup hanger pivot does not bind and is not worn to an extent that allows more than 3 mm (⅛ in.) side-to-side movement of the lowest point on the rim.

9.1.1.4 *Wear of Cam*—The cam shall not be worn to an extent that the cup drops before the cup hanger (cam follower) loses contact with the cam.

9.1.2 *Grooving Tools*—Inspect grooving tools for wear on a frequent and regular basis. The rapidity of wear depends on the material from which the tool is made, and the types of soils being tested. Soils containing a large proportion of fine sand particles may cause rapid wear of grooving tools; therefore, when testing these materials, tools should be inspected more frequently than for other soils.

NOTE 4—The width of the tip of grooving tools is conveniently checked using a pocket-sized measuring magnifier equipped with a millimeter scale. Magnifiers of this type are available from most laboratory supply companies. The depth of the tip of grooving tools can be checked using the depth-measuring feature of vernier calipers.

9.2 *Adjustment of Height-of-Drop*—Adjust the height-of-drop of the cup so that the point on the cup that comes in contact with the base rises to a height of 10 ± 0.2 mm. See Fig. 2 for proper location of the gage relative to the cup during adjustment.

NOTE 5—A convenient procedure for adjusting the height-of-drop is as follows: place a piece of masking tape across the outside bottom of the cup parallel with the axis of the cup hanger pivot. The edge of the tape away from the cup hanger should bisect the spot on the cup that contacts the base. For new cups, placing a piece of carbon paper on the base and allowing the cup to drop several times will mark the contact spot. Attach the cup to the device and turn the crank until the cup is raised to its maximum height. Slide the height gage under the cup from the front, and observe whether the gage contacts the cup or the tape. (See Fig. 2.) If the tape and cup are both simultaneously contacted, the height-of-drop is ready to be checked. If not, adjust the cup until simultaneous contact is made. Check adjustment by turning the crank at 2 revolutions per second while holding the gage in position against the tape and cup. If a faint ringing or clicking sound is heard without the cup rising from the gage, the adjustment is correct. If no ringing is heard or if the cup rises from the gage, readjust the height-of-drop. If the cup rocks on the gage during this checking operation, the cam follower pivot is excessively worn and the worn parts should be replaced. Always remove tape after completion of adjustment operation.

10. Preparation of Test Specimen

10.1 *Wet Preparation Method*—Except where the dry method of specimen preparation is specified (10.2), prepare the specimen for testing as described in the following sections.

10.1.1 *Material Passes the 425-µm (No. 40) Sieve:*

10.1.1.1 Determine by visual and manual methods that the specimen from 8.2 has little or no material retained on a 425-µm (No. 40) sieve. If this is the case, prepare 150 to 200 g of material by mixing thoroughly with distilled or demineralized water on the glass plate or mixing dish using the spatula. If desired, soak the material in a mixing/storage dish with a small amount of water to soften the material before the start of mixing. If using Method A, adjust the water content of the material to bring it to a consistency that would require about 25 to 35 blows of the liquid limit device to close the groove (Note 6). For Method B, the number of blows should be between about 20 and 30 blows.

10.1.1.2 If, during mixing, a small percentage of material is encountered that would be retained on a 425-µm (No. 40) sieve, remove these particles by hand (if possible). If it is impractical to remove the coarser material by hand, remove small percentages (less than about 15 %) of coarser material by working the material (having the above consistency) through a 425-µm sieve. During this procedure, use a piece of rubber sheeting, rubber stopper, or other convenient device provided the procedure does not distort the sieve or degrade material that would be retained if the washing method described in 10.1.2 were used. If larger percentages of coarse material are encountered during mixing, or it is considered impractical to remove the coarser material by the procedures just described, wash the sample as described in 10.1.2. When the coarse particles found during mixing are concretions, shells, or other fragile particles, do not crush these particles to make them pass a 425-µm sieve, but remove by hand or by washing.

10.1.1.3 Place the prepared material in the mixing/storage dish, check its consistency (adjust if required), cover to prevent loss of moisture, and allow to stand (cure) for at least 16 h (overnight). After the standing period and immediately before starting the test, thoroughly remix the soil.

NOTE 6—The time taken to adequately mix a soil will vary greatly, depending on the plasticity and initial water content. Initial mixing times of more than 30 min may be needed for stiff, fat clays.

Copyright ASTM International

10.1.2 *Material Containing Particles Retained on a 425-µm (No. 40) Sieve:*

10.1.2.1 Place the specimen (see 8.2) in a pan or dish and add sufficient water to cover the material. Allow the material to soak until all lumps have softened and the fines no longer adhere to the surfaces of the coarse particles (Note 7).

NOTE 7—In some cases, the cations of salts present in tap water will exchange with the natural cations in the soil and significantly alter the test results if tap water is used in the soaking and washing operations. Unless it is known that such cations are not present in the tap water, distilled or demineralized water should be used. As a general rule, water containing more than 100 mg/L of dissolved solids should not be used for either the soaking or washing operations.

10.1.2.2 When the material contains a large percentage of particles retained on the 425-µm (No. 40) sieve, perform the following washing operation in increments, washing no more than 0.5 kg (1 lb) of material at one time. Place the 425-µm sieve in the bottom of the clean pan. Transfer, without any loss of material, the soil-water mixture onto the sieve. If gravel or coarse sand particles are present, rinse as many of these as possible with small quantities of water from a wash bottle, and discard. Alternatively, transfer the soil-water mixture over a 2.00-mm (No. 10) sieve nested atop the 425-µm sieve, rinse the fine material through and remove the 2.00-mm sieve. After washing and removing as much of the coarser material as possible, add sufficient water to the pan to bring the level to about 13 mm (½ in.) above the surface of the 425-µm sieve. Agitate the slurry by stirring with the fingers while raising and lowering the sieve in the pan and swirling the suspension so that fine material is washed from the coarser particles. Disaggregate fine soil lumps that have not slaked by gently rubbing them over the sieve with the fingertips. Complete the washing operation by raising the sieve above the water surface and rinsing the material retained with a small amount of clean water. Discard material retained on the 425-µm sieve.

10.1.2.3 Reduce the water content of the material passing the 425–µm (No. 40) sieve until it approaches the liquid limit. Reduction of water content may be accomplished by one or a combination of the following methods: (*a*) exposing to air currents at room temperature, (*b*) exposing to warm air currents from a source such as an electric hair dryer, (*c*) decanting clear water from surface of the suspension, (*d*) filtering in a Büchner funnel or using filter candles, or (*e*) draining in a colander or plaster of Paris dish lined with high retentivity,[5] high wet-strength filter paper. If a plaster of Paris dish is used, take care that the dish never becomes sufficiently saturated that it fails to absorb water into its surface. Thoroughly dry dish between uses. During evaporation and cooling, stir the material often enough to prevent over-drying of the fringes and soil pinnacles on the surface of the mixture. For materials containing soluble salts, use a method of water reduction (*a* or *b*) that will not eliminate the soluble salts from the test specimen.

10.1.2.4 If applicable, remove the material retained on the filter paper. Thoroughly mix this material or the above material on the glass plate or in the mixing dish using the spatula. Adjust the water content of the mixture, if necessary, by adding small increments of distilled or demineralized water or by allowing the mixture to dry at room temperature while mixing on the glass plate. If using Method A, the material should be at a water content that would require about 25 to 35 blows of the liquid limit device to close the groove. For Method B, the number of blows should be between about 20 and 30. Put, if necessary, the mixed material in the storage dish, cover to prevent loss of moisture, and allow to stand (cure) for at least 16 h. After the standing period and immediately before starting the test, thoroughly remix the specimen.

10.2 *Dry Preparation Method:*

10.2.1 Dry the specimen from 8.2 at room temperature or in an oven at a temperature not exceeding 60°C until the soil clods will pulverize readily. Disaggregation is expedited if the material is not allowed to completely dry. However, the material should have a dry appearance when pulverized.

10.2.2 Pulverize the material in a mortar with a rubber-tipped pestle or in some other way that does not cause breakdown of individual particles. When the coarse particles found during pulverization are concretions, shells, or other fragile particles, do not crush these particles to make them pass a 425-µm (No. 40) sieve, but remove by hand or other suitable means, such as washing. If a washing procedure is used, follow 10.1.2.1-10.1.2.4.

10.2.3 Separate the material on a 425-µm (No. 40) sieve, shaking the sieve by hand to assure thorough separation of the finer fraction. Return the material retained on the 425-µm sieve to the pulverizing apparatus and repeat the pulverizing and sieving operations. Stop this procedure when most of the fine material has been disaggregated and material retained on the 425-µm sieve consists of individual particles.

10.2.4 Place material retained on the 425-µm (No. 40) sieve after the final pulverizing operations in a dish and soak in a small amount of water. Stir this mixture and transfer it to a 425-µm sieve, catching the water and any suspended fines in the washing pan. Pour this suspension into a dish containing the dry soil previously sieved through the 425-µm sieve. Discard material retained on the 425-µm sieve.

10.2.5 Proceed as described in 10.1.2.3 and 10.1.2.4.

MULTIPOINT LIQUID LIMIT—METHOD A

11. Procedure

11.1 Thoroughly remix the specimen (soil) in its mixing cup, and, if necessary, adjust its water content until the constancy requires about 25 to 35 blows of the liquid limit device to close the groove. Using a spatula, place a portion(s) of the prepared soil in the cup of the liquid limit device at the point where the cup rests on the base, squeeze it down, and spread it into the cup to a depth of about 10 mm at its deepest point, tapering to form an approximately horizontal surface. Take care to eliminate air bubbles from the soil pat, but form the pat with as few strokes as possible. Keep the unused soil in the mixing/storage dish. Cover the dish with a wet towel (or use other means) to retain the moisture in the soil.

11.2 Form a groove in the soil pat by drawing the tool, beveled edge forward, through the soil on a line joining the highest point to the lowest point on the rim of the cup. When cutting the groove, hold the grooving tool against the surface of

[5] S and S 595 filter paper available in 320-mm circles has proven satisfactory.

Copyright ASTM International

the cup and draw in an arc, maintaining the tool perpendicular to the surface of the cup throughout its movement. See Fig. 6. In soils where a groove cannot be made in one stroke without tearing the soil, cut the groove with several strokes of the grooving tool. Alternatively, cut the groove to slightly less than required dimensions with a spatula and use the grooving tool to bring the groove to final dimensions. Exercise extreme care to prevent sliding the soil pat relative to the surface of the cup.

11.3 Verify that no crumbs of soil are present on the base or the underside of the cup. Lift and drop the cup by turning the crank at a rate of 1.9 to 2.1 drops per second until the two halves of the soil pat come in contact at the bottom of the groove along a distance of 13 mm (½ in.). See Fig. 7 and Fig. 8.

NOTE 8—Use of a scale is recommended to verify that the groove has closed 13 mm (½ in.).

11.4 Verify that an air bubble has not caused premature closing of the groove by observing that both sides of the groove have flowed together with approximately the same shape. If a bubble has caused premature closing of the groove, reform the soil in the cup, adding a small amount of soil to make up for that lost in the grooving operation and repeat 11.1-11.3. If the soil slides on the surface of the cup, repeat 11.1-11.3 at a higher water content. If, after several trials at successively higher water contents, the soil pat continues to slide in the cup or if the number of blows required to close the groove is always less than 25, record that the liquid limit could not be determined, and report the soil as nonplastic without performing the plastic limit test.

11.5 Record the number of drops, N, required to close the groove. Remove a slice of soil approximately the width of the spatula, extending from edge to edge of the soil cake at right angles to the groove and including that portion of the groove in which the soil flowed together, place in a container of known mass, and cover.

11.6 Return the soil remaining in the cup to the dish. Wash and dry the cup and grooving tool and reattach the cup to the carriage in preparation for the next trial.

11.7 Remix the entire soil specimen in the dish adding distilled water to increase the water content of the soil and decrease the number of blows required to close the groove. Repeat 11.1-11.6 for at least two additional trials producing successively lower numbers of blows to close the groove. One of the trials shall be for a closure requiring 25 to 35 blows, one for closure between 20 and 30 blows, and one trial for a closure requiring 15 to 25 blows.

11.8 Determine the water content, W^n, of the soil specimen from each trial in accordance with Test Method D 2216.

11.8.1 Determination of initial masses (container plus moist soil) should be performed immediately after completion of the test. If the test is to be interrupted for more than about 15 minutes, determine the mass of the water content specimens already obtained at the time of the interruption.

12. Calculation

12.1 Plot the relationship between the water content, W^n, and the corresponding number of drops, N, of the cup on a semilogarithmic graph with the water content as ordinates on the arithmetical scale, and the number of drops as abscissas on a logarithmic scale. Draw the best straight line through the three or more plotted points.

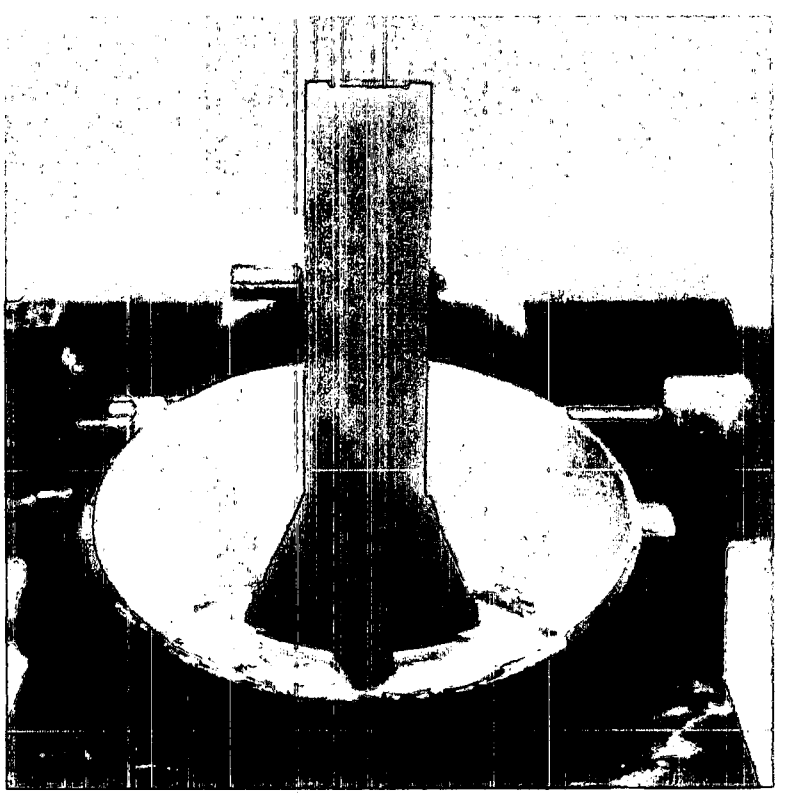

FIG. 6 Example of Grooving Tool Placed in a Properly Grooved Soil Pat

Copyright ASTM International

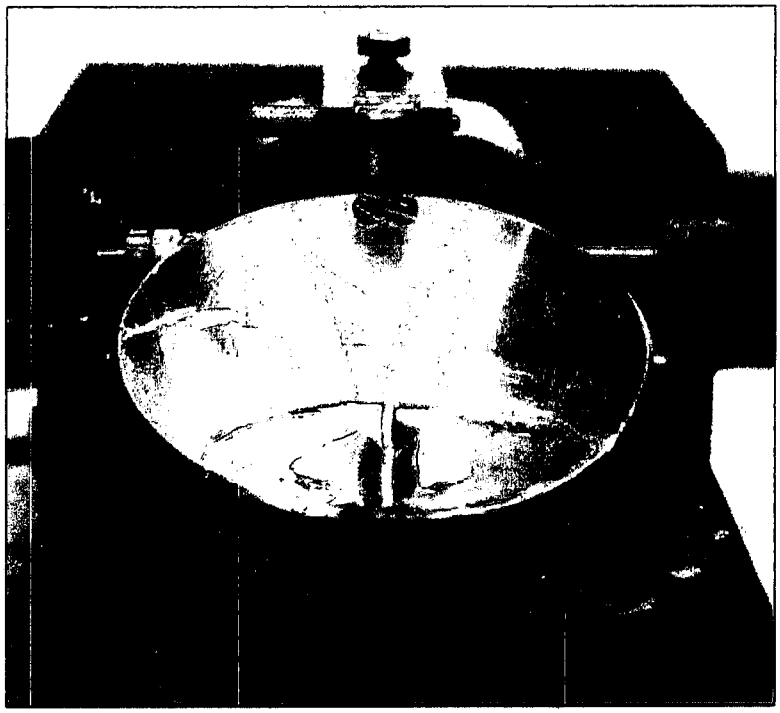

FIG. 7 Grooved Soil Pat in Liquid Limit Device

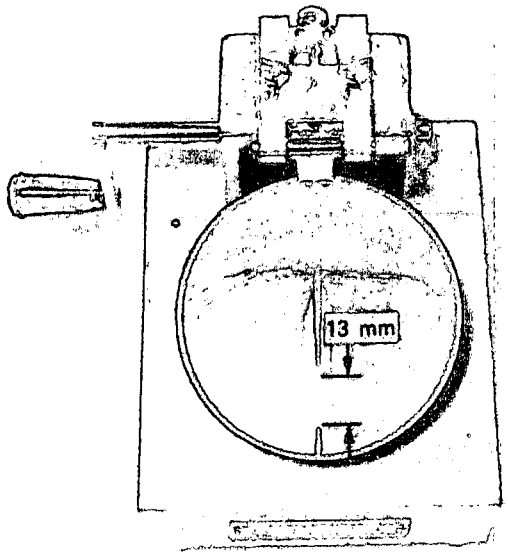

FIG. 8 Soil Pat After Groove Has Closed

12.2 Take the water content corresponding to the intersection of the line with the 25-drop abscissa as the liquid limit of the soil and round to the nearest whole number. Computational methods may be substituted for the graphical method for fitting a straight line to the data and determining the liquid limit.

ONE-POINT LIQUID LIMIT—METHOD B

13. Procedure

13.1 Proceed as described in 11.1-11.5 except that the number of blows required to close the groove shall be 20 to 30.

Copyright ASTM International

If less than 20 or more than 30 blows are required, adjust the water content of the soil and repeat the procedure.

13.2 Immediately after removing a water content specimen as described in 11.5, reform the soil in the cup, adding a small amount of soil to make up for that lost in the grooving and water content sampling orientations. Repeat 11.2-11.5, and, if the second closing of the groove requires the same number of drops or no more than two drops difference, secure another water content specimen. Otherwise, remix the entire specimen and repeat.

NOTE 9—Excessive drying or inadequate mixing will cause the number of blows to vary.

13.3 Determine water contents of specimens in accordance with 11.8.

14. Calculation

14.1 Determine the liquid limit for each water content specimen using one of the following equations:

$$LL^n = W^n \cdot \left(\frac{N}{25}\right)^{0.121}$$

or

$$LL^n = k \cdot W^n$$

where:

LL^n = one point liquid limit for given trial, %,
N = number of blows causing closure of the groove for given trial,
W^n = water content for given trial, %, and
k = factor given in Table 1.

14.1.1 The liquid limit, LL, is the average of the two trial liquid-limit values, to the nearest whole number (without the percent designation).

14.2 If the difference between the two trial liquid-limit values is greater than one percentage point, repeat the test as described in 13.1 through 14.1.1.

PLASTIC LIMIT

15. Preparation of Test Specimen

15.1 Select a 20-g or more portion of soil from the material prepared for the liquid limit test; either, after the second mixing before the test, or from the soil remaining after completion of the liquid limit test. Reduce the water content of the soil to a consistency at which it can be rolled without sticking to the hands by spreading or mixing continuously on the glass plate or in the mixing/storage dish. The drying process may be accelerated by exposing the soil to the air current from an electric fan, or by blotting with paper, that does not add any fiber to the soil. Paper such as hard surface paper toweling or high wet-strength filter paper is adequate.

TABLE 1 Factors for Obtaining Liquid Limit from Water Content and Number of Drops Causing Closure of Groove

N (Number of Drops)	k (Factor for Liquid Limit)
20	0.973
21	0.979
22	0.985
23	0.990
24	0.995
25	1.000
26	1.005
27	1.009
28	1.014
29	1.018
30	1.022

16. Procedure

16.1 From this plastic-limit specimen, select a 1.5 to 2.0 g portion. Form the selected portion into an ellipsoidal mass.

16.2 Roll the soil mass by one of the following methods (hand or rolling device):

16.2.1 *Hand Method*—Roll the mass between the palm or fingers and the ground-glass plate with just sufficient pressure to roll the mass into a thread of uniform diameter throughout its length (see Note 10). The thread shall be further deformed on each stroke so that its diameter reaches 3.2 mm (⅛ in.), taking no more than 2 min (see Note 11). The amount of hand or finger pressure required will vary greatly according to the soil being tested, that is, the required pressure typically increases with increasing plasticity. Fragile soils of low plasticity are best rolled under the outer edge of the palm or at the base of the thumb.

NOTE 10—A normal rate of rolling for most soils should be 80 to 90 strokes per minute, counting a stroke as one complete motion of the hand forward and back to the starting position. This rate of rolling may have to be decreased for very fragile soils.

NOTE 11—A 3.2-mm (⅛-in.) diameter rod or tube is useful for frequent comparison with the soil thread to ascertain when the thread has reached the proper diameter.

16.2.2 *Rolling Device Method*—Attach smooth unglazed paper to both the top and bottom plates of the plastic limit-rolling device. Place the soil mass on the bottom plate at the midpoint between the slide rails. Place the top plate in contact with the soil mass(es). Simultaneously apply a slight downward force and back and forth motion to the top plate so that the top plate comes into contact with the side rails within 2 min (see Notes 10 and 12). During this rolling process, the end(s) the soil thread(s) shall not contact the side rail(s). If this occurs, roll a smaller mass of soil (even if it is less than that mentioned in Section 16.1).

NOTE 12—In most cases, two soil masses (threads) can be rolled simultaneously in the plastic limit-rolling device.

16.3 When the diameter of the thread becomes 3.2 mm, break the thread into several pieces. Squeeze the pieces together, knead between the thumb and first finger of each hand, reform into an ellipsoidal mass, and re-roll. Continue this alternate rolling to a thread 3.2 mm in diameter, gathering together, kneading and re-rolling, until the thread crumbles under the pressure required for rolling and the soil can no longer be rolled into a 3.2-mm diameter thread (see Fig. 9). It has no significance if the thread breaks into threads of shorter length. Roll each of these shorter threads to 3.2 mm in diameter. The only requirement for continuing the test is that these threads can be reformed into an ellipsoidal mass and rolled out again. The operator shall at no time attempt to produce failure at exactly 3.2-mm diameter by allowing the thread to reach 3.2 mm, then reducing the rate of rolling or the

Copyright ASTM International

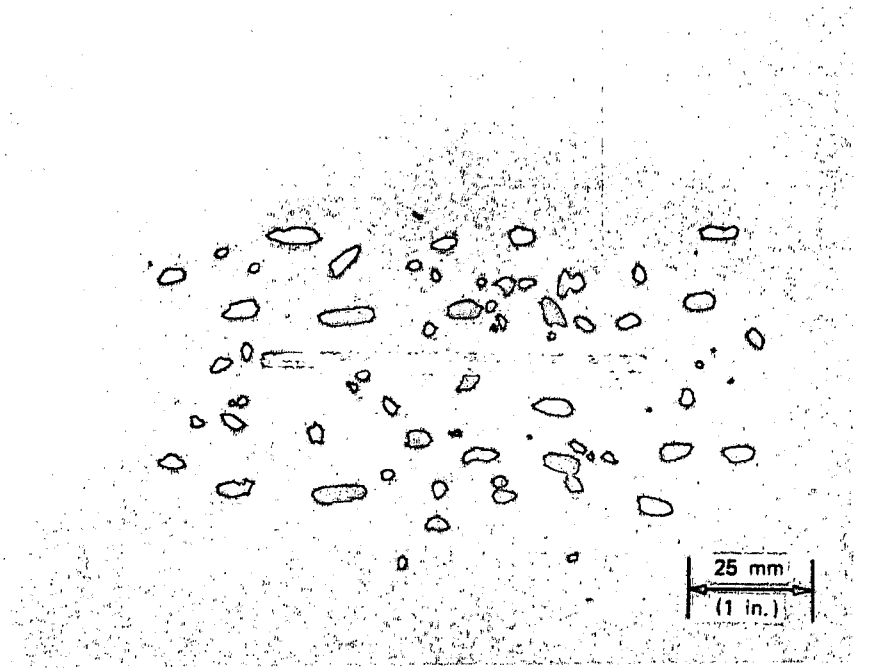

FIG. 9 Lean Clay Soil at the Plastic Limit

hand pressure, or both, while continuing the rolling without further deformation until the thread falls apart. It is permissible, however, to reduce the total amount of deformation for feebly plastic soils by making the initial diameter of the ellipsoidal mass nearer to the required 3.2-mm final diameter. If crumbling occurs when the thread has a diameter greater than 3.2 mm, this shall be considered a satisfactory end point, provided the soil has been previously rolled into a thread 3.2 mm in diameter. Crumbling of the thread will manifest itself differently with the various types of soil. Some soils fall apart in numerous small aggregations of particles, others may form an outside tubular layer that starts splitting at both ends. The splitting progresses toward the middle, and finally, the thread falls apart in many small platy particles. Fat clay soils require much pressure to deform the thread, particularly as they approach the plastic limit. With these soils, the thread breaks into a series of barrel-shaped segments about 3.2 to 9.5 mm (⅛ to ⅜ in.) in length.

16.4 Gather the portions of the crumbled thread together and place in a container of known mass. Immediately cover the container.

16.5 Select another 1.5 to 2.0-g portion of soil from the plastic-limit specimen and repeat the operations described in 16.1 and 16.2 until the container has at least 6 g of soil.

16.6 Repeat 16.1-16.5 to make another container holding at least 6 g of soil. Determine the water content of the soil contained in the containers in accordance with Test Method D 2216. See 11.8.1.

17. Calculation

17.1 Compute the average of the two water contents (trial plastic limits) and round to the nearest whole number. This value is the plastic limit, *PL*. Repeat the test if the difference between the two trial plastic limits is greater than the acceptable range for two results listed in Table 2 for single-operator precision, that is, 1.4 percentage points; i.e., (2.8 × 0.5).

PLASTICITY INDEX

18. Calculation

18.1 Calculate the plasticity index as follows:

$$PI = LL - PL$$

where:

LL = liquid limit (whole number), and
PL = plastic limit (whole number).

18.1.1 Both LL and PL are whole numbers. If either the liquid limit or plastic limit could not be determined, or if the plastic limit is equal to or greater than the liquid limit, report the soil as nonplastic, NP.

19. Report

19.1 Report the following information:

19.1.1 Sample identifying information,

19.1.2 Any special specimen selection process used, such as removal of sand lenses from undisturbed sample,

19.1.3 Report sample as air-dried if the sample was air-dried before or during preparation,

19.1.4 Liquid limit, plastic limit, and plasticity index to the nearest whole number, omitting the percent designation. If the liquid limit or plastic limit tests could not be performed, or if the plastic limit is equal to or greater than the liquid limit, report the soil as nonplastic, NP,

19.1.5 Estimate of the percentage of sample retained on the 425-µm (No. 40) sieve, and

19.1.6 Procedure by which liquid limit was performed, if it differs from the multipoint method.

TABLE 2 Summary of Test Results from Triplicate Test Laboratories (Atterberg Limits)

(1) Soil Type	(2) Number of Triplicate Test Laboratories			(3) Average Value[A] (Percentage Points)			(4) Standard Deviation[B] (Percentage Points)			(5) Acceptable Range of Two Results[C] (Percentage Points)		
	Type Test											
	LL	PL	PI	LL	PL	PI	LL	PL	PI	LL	PL	PI
Single-Operator Results (Within-Laboratory Repeatability)												
CH	13	13	13	59.8	20.6	39.2	0.7	0.5	0.8	2	1	2
CL	14	13	13	33.4	19.9	13.6	0.3	0.4	0.5	1	1	1
ML	12	11	11	27.4	23.4[D]	4.1[D]	0.5	0.3	0.6	2	1	2
Multilaboratory Results (Between-Laboratory Reproducibility)												
CH	13	13	13	59.8	20.6	39.2	1.3	2.0	2.5	4	6	7
CL	14	13	13	33.4	19.9	13.6	1.0	1.2	1.7	3	3	5
ML	12	11	11	27.4	23.4[D]	4.1[D]	1.3	0.9	1.9	4	3	5

[A]The number of significant digits and decimal places presented are representative of the input data. In accordance with Practice D 6026, the standard deviation and acceptable range of results can not have more decimal places than the input data.

[B]Standard deviation is calculated in accordance with Practice E 691 and is referred to as the 1*s* limit.

[C]Acceptable range of two results is referred to as the d2*s* limit. It is calculated as $-1.960 \cdot \sqrt{2} \cdot 1s$, as defined by Practice E 177. The difference between two properly conducted tests should not exceed this limit. The number of significant digits/decimal places presented is equal to that prescribed by this test method or Practice D 6026. In addition, the value presented can have the same number of decimal places as the standard deviation, even if that result has more significant digits than the standard deviation.

[D]For the ML soil, 2 out of 14 triplicate test laboratories reported the soil as nonplastic.

20. Precision and Bias

20.1 *Precision*—Criteria for judging the acceptability of test results obtained by these test methods on a range of soil types are given in Tables 2 and 3. In performing these test methods, Method A and the Wet Preparation Method (except soil was air-dried) were used.

20.1.1 These estimates of precision are based on the results of the interlaboratory program conducted by the ASTM Reference Soils and Testing Program.[6] In this program, some laboratories performed three replicate tests per soil type (triplicate test laboratory), while other laboratories performed a single test per soil type (single-test laboratory). A description of the soils tested is given in 20.1.5. The precision estimates vary with soil type and method(s) used. Judgment is required when applying these estimates to another soil and method used (Method A or B, or Wet or Dry Preparation Method).

20.1.2 The data in Table 2 are based on three replicate tests performed by each triplicate test laboratory on each soil type. The single operator and multilaboratory standard deviation shown in Table 2, Column 4, were obtained in accordance with Practice E 691, which recommends each testing laboratory perform a minimum of three replicate tests. Results of two properly conducted tests performed by the same operator on the same material, using the same equipment, and in the shortest practical period of time should not differ by more than the single-operator d2*s* limits shown in Table 2, Column 5. For definition of d2*s* see Footnote C in Table 2. Results of two properly conducted tests performed by different operators and on different days should not differ by more than the multilaboratory d2*s* limits shown in Table 2, Column 5.

20.1.3 In the ASTM Reference Soils and Testing Program, many of the laboratories performed only a single test on each soil type. This is common practice in the design and construction industry. The data for each soil type in Table 3 are based upon the first test results from the triplicate test laboratories and the single test results from the other laboratories. Results of two properly conducted tests performed by two different laboratories with different operators using different equipment and on different days should not vary by more than the d2*s* limits shown in Table 3, Column 5. The results in Table 2 and Table 3 are dissimilar because the data sets are different.

20.1.4 Table 2 presents a rigorous interpretation of triplicate test data in accordance with Practice E 691 from pre-qualified laboratories. Table 3 is derived from test data that represents common practice.

20.1.5 *Soil Types*—Based on the multilaboratory test results, the soils used in the program are described below in accordance with Practice D 2487. In addition, the local names of the soils are given.

CH—Fat clay, CH, 99 % fines, LL=60, PI=39, grayish brown, soil had been air dried and pulverized. Local name—Vicksburg Buckshot Clay

CL—Lean clay, CL, 89 % fines, LL=33, PI=13, gray, soil had been air dried and pulverized. Local name—Annapolis Clay

ML—Silt, ML, 99 % fines, LL=27, PI=4, light brown, soil had been air dried and pulverized. Local name—Vicksburg Silt

20.2 *Bias*—There is no acceptable reference value for these test methods; therefore, bias cannot be determined.

[6] Supporting data are available from ASTM Headquarters. Request RR: D18-1013.

TABLE 3 Summary of Single-Test Result from Each Laboratory (Atterberg Limits)[A]

(1) Soil Type	(2) Number of Test Laboratories	(3) Average Value (Percentage Points)			(4) Standard Deviation (Percentage Points)			(5) Acceptable Range of Two Results (Percentage Points)		
		Type Test								
		LL	PL	PI	LL	PL	PI	LL	PL	PI
CH	24	59.9	20.4	39.5	2.1	2.7	3.1	6	7	9
CL	24	33.3	19.9	13.4	0.8	1.3	1.6	2	4	4
ML	18	27.1	23.2[B]	3.9[B]	1.3	1.2	1.8	4	3	5

[A]For column footnotes, see Table 3.

[B]For the ML soil, 6 out of 24 laboratories reported the soil as nonplastic.

21. Keywords

21.1 activity; Atterberg limits; liquid limit; plasticity index; plastic limit

Copyright ASTM International

ANNEX

(Mandatory Information)

A1. Resilience Tester

A1.1 A device for measuring the resilience of liquid limit device bases is shown in Fig. A1.1. The device consists of a clear acrylic plastic tube and cap, a 5/16-in. diameter steel ball, and a small bar magnet. The cylinder may be cemented to the cap or threaded as shown. The small bar magnet is held in the recess of the cap and the steel ball is fixed into the recess in the underside of the cap with the bar magnet. The cylinder is then turned upright and placed on the top surface of the base to be tested. Holding the tube lightly against the liquid limit device base with one hand, release the ball by pulling the magnet out of the cap. Use the scale markings on the outside of the cylinder to determine the highest point reached by the bottom of the ball. Repeat the drop at least three times, placing the tester in a different location for each drop. Tests should be conducted at room temperature.

Copyright ASTM International

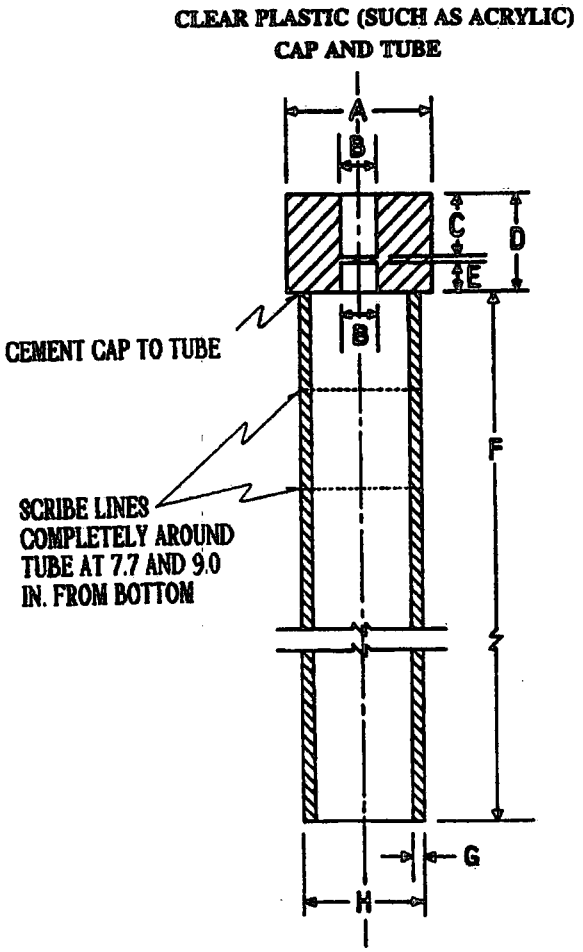

TABLE OF MEASUREMENTS

DIMENSION	DESCRIPTION	ENGLISH, in.	METRIC, mm
A	DIAM. OF CAP	1 1/2	38.10
B	DIAM. OF HOLE	3/8	9.52
C	DEPTH OF HOLE	10/16	15.88
D	HEIGHT OF CAP	1	25.40
E	DEPTH OF HOLE	5/16	7.94
F	LENGTH OF TUBE	10	254.00
G	WALL THICKNESS	1/8	3.18
H	O.D. OF TUBE	1 1/4	31.75

FIG. A1.1 Resilience Tester

APPENDIX

X1. Sample Data Sheet

X1.1 See Fig. X1.1.

Copyright ASTM International

Laboratory Name: Example
Project Name: Example
Project Number: Example
Soil Type: CH-1
Boring Number: N/A
Depth (m or ft): N/A
Initial Visual Description: CH, brown, highly plastic clay
Sample Number: N/A

INITIAL VISUAL USCS GROUP SYMBOL:	CH

SPECIMEN PREPARATION			
Wet:	X	Washed on #40 Sieve	
Dry (Air):		Dry Sieved on #40 Sieve	
Dry (Oven):		Mechanically Pushed Through #40 Sieve	
Mixed on Glass Plate and Removed Medium Plus Sand Particles			X
Mixing Water: Distilled	X	Demineralized:	Other:

TESTING EQUIPMENT USED		
Plastic Limit:	Hand Rolled	X
	Mechanical Rolling Device	
Liquid Limit:	Manual	X
Apparatus No. ( )	Mechanical	
Casagrande/ASTM	Metal	
Grooving Tool:	Plastic	X

AS-RECEIVED WATER CONTENT (OVEN DRIED)

Container No.	example	example	
Mass Moist Soil + Container, M1 (g)	n/a	n/a	
Mass Dry Soil + Container, M2 (g)			
Mass Container, M3 (g)			Average
WATER CONTENT, w_o (%)			

Circle Approximate Max. Grain Size in Sample 3" 1-1/2" 3/4" 3/8" #4 #10 <#10

PLASTIC LIMIT

Container No.	151	s-110	
Mass Moist Soil + Container, M1 (g)	24.44	23.75	
Mass Dry Soil + Container, M2 (g)	22.96	22.13	
Mass Container, M3 (g)	16.76	15.32	Average
WATER CONTENT, w_o (%)	23.9	23.8	23.9

LIQUID LIMIT

Container No.	147	232	152	
Mass Moist Soil + Container, M1 (g)	35.24	37.79	35.88	
Mass Dry Soil + Container, M2 (g)	28.52	30.50	28.46	
Mass Container, M3 (g)	17.19	18.55	16.75	
WATER CONTENT, w_o (%)	59.3	61.0	63.4	
NUMBER OF BLOWS, N	32	24	18	Average
LIQUID LIMIT, ASTM SINGLE POINT	n/a	n/a	n/a	n/a

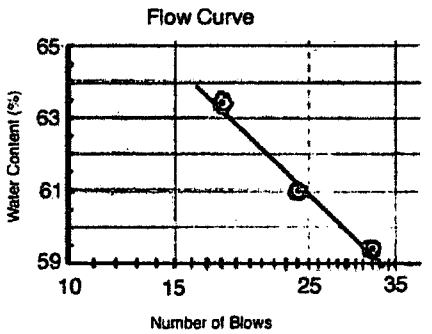

LINEAR REGRESSION ANALYSIS	
w at N = 25 Blows	
Coef. Of Determination, r^2	

Recommended range of Blow Count for Multiple Point Method A:
15 to 25, 25 to 30, and 25 to 35
Recommended range of Blow Count for Single Point Method B:
20 to 30
wo or w = ((M1-M2)/(M2-M3))x100
LL = Water Content at N= 25 blows, from Flow Curve
LL by Single Point = w x (N/25)0.121
PI = LL - PL
LI = (wo-PL) / (LL - PL)

SUMMARY

TEST METHOD	A	X	B		Wet	X	Dry	
AS-RECEIVED WATER CONTENT, w_o (%)							n/a	
LIQUID LIMIT, LL							61	
PLASTIC LIMIT, PL							24	
PLASTICITY INDEX, PI							37	
LIQUIDITY INDEX, LI							n/a	
PERCENTAGE POINTS ABOVE/BELOW A-LINE							n/a	
PLASTICITY CHART CLASSIFICATION							CH	

PREPARED BY: _____ DATE: _____ DRY MASS BY: _____ CHECKED BY: _____
TESTED BY: _____ DATE: _____ CALCULATED BY: _____ SPOT CHECKED BY: _____
REVIEWED BY: _____

FIG. X1.1 Sample Data Sheet

SUMMARY OF CHANGES

Committee D18 has identified the location of selected changes to this standard since the last issue (2000) that may impact the use of this standard.

(*1*) Revised 3.1.1.
(*2*) Added new Fig. 6 and Fig. 7 and subsequent figures were renumbered.
(*3*) Added Appendix X1 and Fig. X1.1.

ASTM International takes no position respecting the validity of any patent rights asserted in connection with any item mentioned in this standard. Users of this standard are expressly advised that determination of the validity of any such patent rights, and the risk of infringement of such rights, are entirely their own responsibility.

This standard is subject to revision at any time by the responsible technical committee and must be reviewed every five years and if not revised, either reapproved or withdrawn. Your comments are invited either for revision of this standard or for additional standards and should be addressed to ASTM International Headquarters. Your comments will receive careful consideration at a meeting of the responsible technical committee, which you may attend. If you feel that your comments have not received a fair hearing you should make your views known to the ASTM Committee on Standards, at the address shown below.

This standard is copyrighted by ASTM International, 100 Barr Harbor Drive, PO Box C700, West Conshohocken, PA 19428-2959, United States. Individual reprints (single or multiple copies) of this standard may be obtained by contacting ASTM at the above address or at 610-832-9585 (phone), 610-832-9555 (fax), or service@astm.org (e-mail); or through the ASTM website (www.astm.org).

Copyright ASTM International

Designation: D 4767 – 04

Standard Test Method for Consolidated Undrained Triaxial Compression Test for Cohesive Soils[1]

This standard is issued under the fixed designation D 4767; the number immediately following the designation indicates the year of original adoption or, in the case of revision, the year of last revision. A number in parentheses indicates the year of last reapproval. A superscript epsilon (ε) indicates an editorial change since the last revision or reapproval.

1. Scope*

1.1 This test method covers the determination of strength and stress-strain relationships of a cylindrical specimen of either an undisturbed or remolded saturated cohesive soil. Specimens are isotropically consolidated and sheared in compression without drainage at a constant rate of axial deformation (strain controlled).

1.2 This test method provides for the calculation of total and effective stresses, and axial compression by measurement of axial load, axial deformation, and pore-water pressure.

1.3 This test method provides data useful in determining strength and deformation properties of cohesive soils such as Mohr strength envelopes and Young's modulus. Generally, three specimens are tested at different effective consolidation stresses to define a strength envelope.

1.4 The determination of strength envelopes and the development of relationships to aid in interpreting and evaluating test results are beyond the scope of this test method and must be performed by a qualified, experienced professional.

1.5 All observed and calculated values shall conform to the guidelines for significant digits and rounding established in Practice D 6026.

1.5.1 The method used to specify how data are collected, calculated, or recorded in this standard is not directly related to the accuracy to which the data can be applied in design or other uses, or both. How one applies the results obtained using this standard is beyond its scope.

1.6 The values stated in SI units shall be regarded as the standard. The values stated in inch-pound units are approximate.

1.7 *This standard does not purport to address all of the safety concerns, if any, associated with its use. It is the responsibility of the user of this standard to establish appropriate safety and health practices and determine the applicability of regulatory limitations prior to use.*

2. Referenced Documents

2.1 *ASTM Standards:* [2]

D 422 Method for Particle-Size Analysis of Soils

D 653 Terminology Relating to Soil, Rock, and Contained Fluids

D 854 Test Method for Specific Gravity of Soils

D 1587 Practice for Thin-Walled Tube Sampling of Soils

D 2166 Test Method for Unconfined Compressive Strength of Cohesive Soil

D 2216 Method for Laboratory Determination of Water (Moisture) Content of Soil, Rock, and Soil-Aggregate Mixtures

D 2435 Test Method for One-Dimensional Consolidation Properties of Soils

D 2850 Test Method for Unconsolidated, Undrained Compressive Strength of Cohesive Soils in Triaxial Compression

D 3740 Practice for Minimum Requirements for Agencies Engaged in the Testing and/or Inspection of Soil and Rock as Used in Engineering Design and Construction

D 4220 Practices for Preserving and Transporting Soil Samples

D 4318 Test Method for Liquid Limit, Plastic Limit, and Plasticity Index of Soils

D 4753 Specification for Evaluating, Selecting, and Specifying Balances and Scales for Use in Soil and Rock Testing

D 6026 Practice for Using Significant Digits in Geotechnical Data

3. Terminology

3.1 *Definitions*—The definitions of terms used in this test method shall be in accordance with Terminology D 653.

3.2 *Definitions of Terms Specific to This Standard:*

3.2.1 *back pressure*—a pressure applied to the specimen pore-water to cause air in the pore space to compress and to

[1] This test method is under the jurisdiction of ASTM Committee D18 on Soil and Rock and is the direct responsibility of Subcommittee D18.05 on Strength and Compressibility of Soils.

Current edition approved Nov. 1, 2004. Published December 2004. Originally approved in 1988. Last previou edition approved in 2002 as D 4767 – 02.

[2] For referenced ASTM standards, visit the ASTM website, www.astm.org, or contact ASTM Customer Service at service@astm.org. For *Annual Book of ASTM Standards* volume information, refer to the standard's Document Summary page on the ASTM website.

***A Summary of Changes section appears at the end of this standard.**

Copyright © ASTM International, 100 Barr Harbor Drive, PO Box C700, West Conshohocken, PA 19428-2959, United States.

pass into solution in the pore-water thereby increasing the percent saturation of the specimen.

3.2.2 *effective consolidation stress*—the difference between the cell pressure and the pore-water pressure prior to shearing the specimen.

3.2.3 *failure*—the stress condition at failure for a test specimen. Failure is often taken to correspond to the maximum principal stress difference (maximum deviator stress) attained or the principal stress difference (deviator stress) at 15 % axial strain, whichever is obtained first during the performance of a test. Depending on soil behavior and field application, other suitable failure criteria may be defined, such as maximum effective stress obliquity, $\sigma'1/\sigma'3$, or the principal stress difference (deviator stress) at a selected axial strain other than 15 %.

4. Significance and Use

4.1 The shear strength of a saturated soil in triaxial compression depends on the stresses applied, time of consolidation, strain rate, and the stress history experienced by the soil.

4.2 In this test method, the shear characteristics are measured under undrained conditions and is applicable to field conditions where soils that have been fully consolidated under one set of stresses are subjected to a change in stress without time for further consolidation to take place (undrained condition), and the field stress conditions are similar to those in the test method.

NOTE 1—If the strength is required for the case where the soil is not consolidated during testing prior to shear, refer to Test Method D 2850 or Test Method D 2166.

4.3 Using the pore-water pressure measured during the test, the shear strength determined from this test method can be expressed in terms of effective stress. This shear strength may be applied to field conditions where full drainage can occur (drained conditions) or where pore pressures induced by loading can be estimated, and the field stress conditions are similar to those in the test method.

4.4 The shear strength determined from the test expressed in terms of total stresses (undrained conditions) or effective stresses (drained conditions) is commonly used in embankment stability analyses, earth pressure calculations, and foundation design.

NOTE 2—Notwithstanding the statements on precision and bias contained in this test method. The precision of this test method is dependent on the competence of the personnel performing it and the suitability of the equipment and facilities used. Agencies which meet the criteria of Practice D 3740 are generally considered capable of competent testing. Users of this test method are cautioned that compliance with Practice D 3740 does not ensure reliable testing. Reliable testing depends on several factors; Practice D 3740 provides a means of evaluating some of those factors.

5. Apparatus

5.1 The requirements for equipment needed to perform satisfactory tests are given in the following sections. See Fig. 1 and Fig. 2

5.2 *Axial Loading Device*—The axial loading device shall be a screw jack driven by an electric motor through a geared transmission, a hydraulic loading device, or any other compression device with sufficient capacity and control to provide the rate of axial strain (loading) prescribed in 8.4.2. The rate of advance of the loading device shall not deviate by more than ±1 % from the selected value. Vibration due to the operation of the loading device shall be sufficiently small to not cause dimensional changes in the specimen or to produce changes in pore-water pressure when the drainage valves are closed.

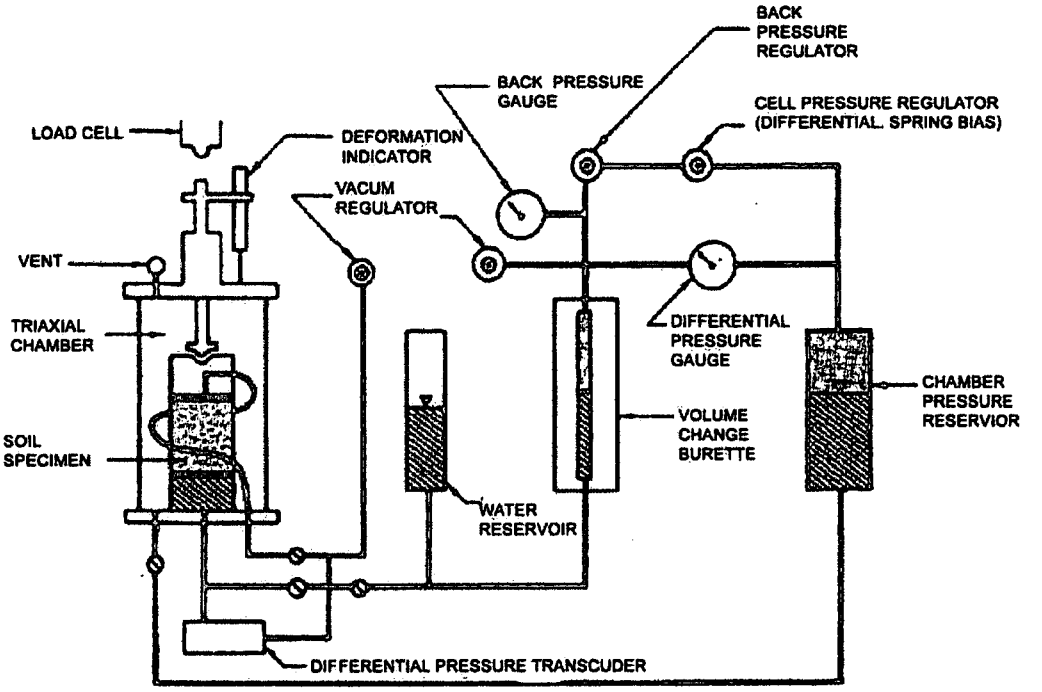

FIG. 1 Schematic Diagram of a Typical Consolidated Undrained Triaxial Apparatus

Copyright ASTM International

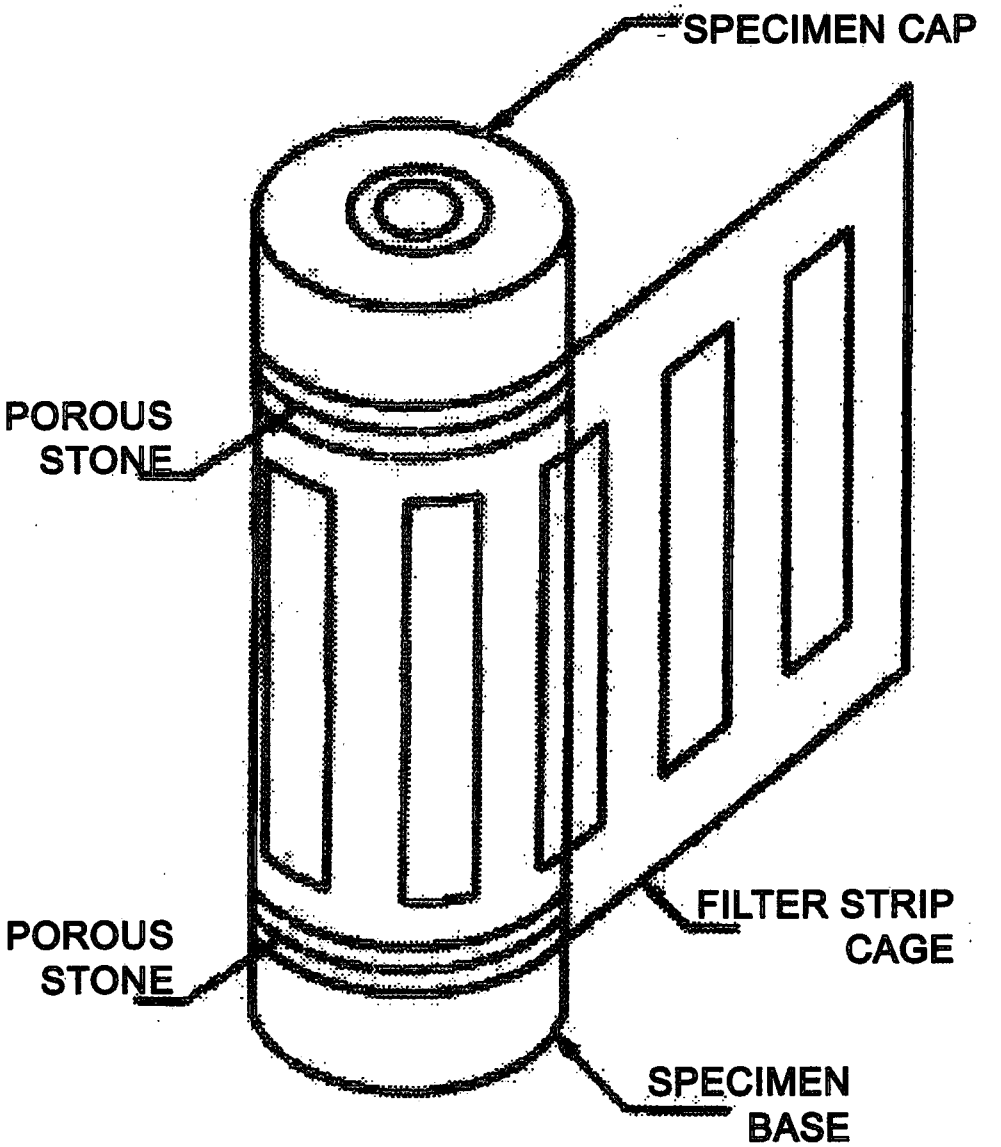

FIG. 2 Filter Strip Cage

NOTE 3—A loading device may be judged to produce sufficiently small vibrations if there are no visible ripples in a glass of water placed on the loading platform when the device is operating at the speed at which the test is performed.

5.3 *Axial Load-Measuring Device*—The axial load-measuring device shall be a load ring, electronic load cell, hydraulic load cell, or any other load-measuring device capable of the accuracy prescribed in this paragraph and may be a part of the axial loading device. The axial load-measuring device shall be capable of measuring the axial load to an accuracy of within 1 % of the axial load at failure. If the load-measuring device is located inside the triaxial compression chamber, it shall be insensitive to horizontal forces and to the magnitude of the chamber pressure.

5.4 *Triaxial Compression Chamber*—The triaxial chamber shall have a working chamber pressure equal to the sum of the effective consolidation stress and the back pressure. It shall consist of a top plate and a base plate separated by a cylinder. The cylinder may be constructed of any material capable of withstanding the applied pressures. It is desirable to use a transparent material or have a cylinder provided with viewing ports so the behavior of the specimen may be observed. The top plate shall have a vent valve such that air can be forced out of the chamber as it is filled. The baseplate shall have an inlet through which the pressure liquid is supplied to the chamber, and inlets leading to the specimen base to the cap to allow saturation and drainage of the specimen when required. The chamber shall provide a connection to the cap.

5.5 *Axial Load Piston*—The piston passing through the top of the chamber and its seal must be designed so the variation in axial load due to friction does not exceed 0.1 % of the axial

load at failure and so there is negligible lateral bending of the piston during loading.

NOTE 4—The use of two linear ball bushings to guide the piston is recommended to minimize friction and maintain alignment.

NOTE 5—A minimum piston diameter of ⅙ the specimen diameter has been used successfully in many laboratories to minimize lateral bending.

5.6 *Pressure and Vacuum-Control Devices*—The chamber pressure and back pressure control devices shall be capable of applying and controlling pressures to within ±2 kPa (0.25 lb/in.^{2}) for effective consolidation pressures less than 200 kPa (28 lb/in.^{2}) and to within ±1 % for effective consolidation pressures greater than 200 kPa. The vacuum-control device shall be capable of applying and controlling partial vacuums to within ±2 kPa. The devices shall consist of pressure/volume controllers, self-compensating mercury pots, pneumatic pressure regulators, combination pneumatic pressure and vacuum regulators, or any other device capable of applying and controlling pressures or partial vacuums to the required tolerances. These tests can require a test duration of several day. Therefore, an air/water interface is not recommended for either the chamber pressure or back pressure systems, unless isolated from the specimen and chamber (e.g. by long tubing).

5.7 *Pressure- and Vacuum-Measurement Devices*—The chamber pressure-, back pressure-, and vacuum-measuring devices shall be capable of measuring pressures or partial vacuums to the tolerances given in 5.6. They may consist of Bourdon gages, pressure manometers, electronic pressure transducers, or any other device capable of measuring pressures, or partial vacuums to the stated tolerances. If separate devices are used to measure the chamber pressure and back pressure, the devices must be calibrated simultaneously and against the same pressure source. Since the chamber and back pressure are the pressures taken at the mid-height of the specimen, it may be necessary to adjust the calibration of the devices to reflect the hydraulic head of fluids in the chamber and back pressure control systems.

5.8 *Pore-Water Pressure-Measurement Device*—The specimen pore-water pressure shall also be measured to the tolerances given in 5.6. During undrained shear, the pore-water pressure shall be measured in such a manner that as little water as possible is allowed to go into or out of the specimen. To achieve this requirement, a very stiff electronic pressure transducer or null-indicating device must be used. With an electronic pressure transducer the pore-water pressure is read directly. With a null-indicating device a pressure control is continuously adjusted to maintain a constant level of the water/mercury interface in the capillary bore of the device. The pressure required to prevent movement of the water is equal to the pore-water pressure. Both measuring devices shall have a compliance of all the assembled parts of the pore-water pressure-measurement system relative to the total volume of the specimen, satisfying the following requirement:

$$(\Delta V/V)/\Delta u < 3.2 \times 10^{-6}\ \mathrm{m^2/kN}\ (2.2 \times 10^{-5}\ \mathrm{in.^2/lb}) \quad (1)$$

where:

ΔV = change in volume of the pore-water measurement system due to a pore pressure change, mm^3(in.^{3}),

V = total volume of the specimen, mm^3(in.^{3}), and

Δu = change in pore pressure, kPa (lb/in.^{2}).

NOTE 6—To meet the compliance requirement, tubing between the specimen and the measuring device should be short and thick-walled with small bores. Thermoplastic, copper, and stainless steel tubing have been used successfully.

5.9 *Volume Change Measurement Device*— The volume of water entering or leaving the specimen shall be measured with an accuracy of within ±0.05 % of the total volume of the specimen. The volume measuring device is usually a burette connected to the back pressure but may be any other device meeting the accuracy requirement. The device must be able to withstand the maximum back pressure.

5.10 *Deformation Indicator*—The vertical deformation of the specimen is usually determined from the travel of the piston acting on the top of the specimen. The piston travel shall be measured with an accuracy of at least 0.25 % of the initial specimen height. The deformation indicator shall have a range of at least 15 % of the initial height of the specimen and may be a dial indicator, linear variable differential transformer (LVDT), extensiometer, or other measuring device meeting the requirements for accuracy and range.

5.11 *Specimen Cap and Base*—The specimen cap and base shall be designed to provide drainage from both ends of the specimen. They shall be constructed of a rigid, noncorrosive, impermeable material, and each shall, except for the drainage provision, have a circular plane surface of contact with the porous disks and a circular cross section. It is desirable for the mass of the specimen cap and top porous disk to be as minimal as possible. However, the mass may be as much as 10 % of the axial load at failure. If the mass is greater than 0.5 % of the applied axial load at failure and greater than 50 g (0.1 lb), the axial load must be corrected for the mass of the specimen cap and top porous disk. The diameter of the cap and base shall be equal to the initial diameter of the specimen. The specimen base shall be connected to the triaxial compression chamber to prevent lateral motion or tilting, and the specimen cap shall be designed such that eccentricity of the piston-to-cap contact relative to the vertical axis of the specimen does not exceed 1.3 mm (0.05 in.). The end of the piston and specimen cap contact area shall be designed so that tilting of the specimen cap during the test is minimal. The cylindrical surface of the specimen base and cap that contacts the membrane to form a seal shall be smooth and free of scratches.

5.12 *Porous Discs*—Two rigid porous disks shall be used to provide drainage at the ends of the specimen. The coefficient of permeability of the disks shall be approximately equal to that of fine sand (1×10^{-4} cm/s (4×10^{-5} in./s)). The disks shall be regularly cleaned by ultrasonic or boiling and brushing and checked to determine whether they have become clogged.

5.13 *Filter-Paper Strips and Disks*— Filter-paper strips are used by many laboratories to decrease the time required for testing. Filter-paper disks of a diameter equal to that of the specimen may be placed between the porous disks and specimen to avoid clogging of the porous disks. If filter strips or disks are used, they shall be of a type that does not dissolve in water. The coefficient of permeability of the filter paper shall not be less than 1×10^{-5} cm/s (4×10^{-6} cm/s) for a normal pressure of 550 kPa (80 lb/in.^{2}). To avoid hoop tension, filter

Copyright ASTM International

strips should cover no more than 50 % of the specimen periphery. Filter-strip cages have been successfully used by many laboratories. An equation for correcting the principal stress difference (deviator stress) for the effect of the strength of vertical filter strips is given in 10.4.3.1.

NOTE 7—Whatman's No. 54 Filter Paper has been found to meet the permeability and durability requirements.

5.14 *Rubber Membrane*—The rubber membrane used to encase the specimen shall provide reliable protection against leakage. Membranes shall be carefully inspected prior to use and if any flaws or pinholes are evident, the membrane shall be discarded. To offer minimum restraint to the specimen, the unstretched membrane diameter shall be between 90 and 95 % of that of the specimen. The membrane thickness shall not exceed 1 % of the diameter of the specimen. The membrane shall be sealed to the specimen cap and base with rubber O-rings for which the unstressed inside diameter is between 75 and 85 % of the diameter of the cap and base, or by other means that will provide a positive seal. An equation for correcting the principal stress difference (deviator stress) for the effect of the stiffness of the membrane is given in 10.4.3.2.

5.15 *Valves*—Changes in volume due to opening and closing valves may result in inaccurate volume change and pore-water pressure measurements. For this reason, valves in the specimen drainage system shall be of the type that produce minimum volume changes due to their operation. A valve may be assumed to produce minimum volume change if opening or closing the valve in a closed, saturated pore-water pressure system does not induce a pressure change of greater than 0.7 kPa (±0.1 lb/in.^{2}). All valves must be capable of withstanding applied pressures without leakage.

NOTE 8—Ball valves have been found to provide minimum volume-change characteristics; however, any other type of valve having suitable volume-change characteristics may be used.

5.16 *Specimen-Size Measurement Devices*— Devices used to determine the height and diameter of the specimen shall measure the respective dimensions to within ±0.1 % of the total dimension and shall be constructed such that their use will not disturb the specimen.

NOTE 9—Circumferential measuring tapes are recommended over calipers for measuring the diameter.

5.17 *Recorders*—Specimen behavior may be recorded manually or by electronic digital or analog recorders. If electronic recorders are used, it shall be necessary to calibrate the measuring devices through the recorder using known input standards.

5.18 *Sample Extruder*—The sample extruder shall be capable of extruding the soil core from the sampling tube at a uniform rate in the same direction of travel as the sample entered the tube and with minimum disturbance of the sample. If the soil core is not extruded vertically, care should be taken to avoid bending stresses on the core due to gravity. Conditions at the time of sample removal may dictate the direction of removal, but the principal concern is to minimize the degree of disturbance.

5.19 *Timer*—A timing device indicating the elapsed testing time to the nearest 1 s shall be used to obtain consolidation data (8.3.3).

5.20 *Balance*—A balance or scale conforming to the requirements of Specification D 4753 readable (with no estimate) to 0.1 % of the test mass or better.

5.21 *Water Deaeration Device*—The amount of dissolved gas (air) in the water used to saturate the specimen shall be decreased by boiling, by heating and spraying into a vacuum, or by any other method that will satisfy the requirement for saturating the specimen within the limits imposed by the available maximum back pressure and time to perform the test.

5.22 *Testing Environment*—The consolidation and shear portion of the test shall be performed in an environment where temperature fluctuations are less than ±4°C (±7.2°F) and there is no direct contact with sunlight.

5.23 *Miscellaneous Apparatus*—Specimen trimming and carving tools including a wire saw, steel straightedge, miter box, vertical trimming lathe, apparatus for preparing compacted specimens, membrane and O-ring expander, water content cans, and data sheets shall be provided as required.

6. Test Specimen Preparation

6.1 *Specimen Size*—Specimens shall be cylindrical and have a minimum diameter of 33 mm (1.3 in.). The average height-to-average diameter ratio shall be between 2 and 2.5. An individual measurement of height or diameter shall not vary from average by more than 5 %. The largest particle size shall be smaller than ⅙ the specimen diameter. If, after completion of a test, it is found based on visual observation that oversize particles are present, indicate this information in the report of test data (11.2.23).

NOTE 10—If oversize particles are found in the specimen after testing, a particle-size analysis may be performed on the tested specimen in accordance with Test Method D 422 to confirm the visual observation and the results provided with the test report (11.2.4).

6.2 *Undisturbed Specimens*—Prepare undisturbed specimens from large undisturbed samples or from samples secured in accordance with Practice D 1587 or other acceptable undisturbed tube sampling procedures. Samples shall be preserved and transported in accordance with the practices for Group C samples in Practices D 4220. Specimens obtained by tube sampling may be tested without trimming except for cutting the end surfaces plane and perpendicular to the longitudinal axis of the specimen, provided soil characteristics are such that no significant disturbance results from sampling. Handle specimens carefully to minimize disturbance, changes in cross section, or change in water content. If compression or any type of noticeable disturbance would be caused by the extrusion device, split the sample tube lengthwise or cut the tube in suitable sections to facilitate removal of the specimen with minimum disturbance. Prepare trimmed specimens, in an environment such as a controlled high-humidity room where soil water content change is minimized. Where removal of pebbles or crumbling resulting from trimming causes voids on the surface of the specimen, carefully fill the voids with remolded soil obtained from the trimmings. If the sample can be trimmed with minimal disturbance, a vertical trimming lathe

Copyright© ASTM International

may be used to reduce the specimen to the required diameter. After obtaining the required diameter, place the specimen in a miter box, and cut the specimen to the final height with a wire saw or other suitable device. Trim the surfaces with the steel straightedge. Perform one or more water content determinations on material trimmed from the specimen in accordance with Test Method D 2216. Determine the mass and dimensions of the specimen using the devices described in 5.16 and 5.20. A minimum of three height measurements (120° apart) and at least three diameter measurements at the quarter points of the height shall be made to determine the average height and diameter of the specimen.

6.3 *Compacted Specimens*—Soil required for compacted specimens shall be thoroughly mixed with sufficient water to produce the desired water content. If water is added to the soil, store the material in a covered container for at least 16 h prior to compaction. Compacted specimens may be prepared by compacting material in at least six layers using a split mold of circular cross section having dimensions meeting the requirements enumerated in 6.1. Specimens may be compacted to the desired density by either: (*1*) kneading or tamping each layer until the accumulative mass of the soil placed in the mold is compacted to a known volume; or (*2*) by adjusting the number of layers, the number of tamps per layer, and the force per tamp. The top of each layer shall be scarified prior to the addition of material for the next layer. The tamper used to compact the material shall have a diameter equal to or less than ½ the diameter of the mold. After a specimen is formed, with the ends perpendicular to the longitudinal axis, remove the mold and determine the mass and dimensions of the specimen using the devices described in 5.16 and 5.20. Perform one or more water content determinations on excess material used to prepare the specimen in accordance with Test Method D 2216.

NOTE 11—It is common for the unit weight of the specimen after removal from the mold to be less than the value based on the volume of the mold. This occurs as a result of the specimen swelling after removal of the lateral confinement due to the mold.

7. Mounting Specimen

7.1 *Preparations*—Before mounting the specimen in the triaxial chamber, make the following preparations:

7.1.1 Inspect the rubber membrane for flaws, pinholes, and leaks.

7.1.2 Place the membrane on the membrane expander or, if it is to be rolled onto the specimen, roll the membrane on the cap or base.

7.1.3 Check that the porous disks and specimen drainage tubes are not obstructed by passing air or water through the appropriate lines.

7.1.4 Attach the pressure-control and volume-measurement system and a pore-pressure measurement device to the chamber base.

7.2 Depending on whether the saturation portion of the test will be initiated with either a wet or dry drainage system, mount the specimen using the appropriate method, as follows in either 7.2.1 or 7.2.2. The dry mounting method is strongly recommended for specimens with initial saturation less than 90 %. The dry mounting method removes air prior to adding backpressure and lowers the backpressure needed to attain an adequate percent saturation.

NOTE 12—It is recommended that the dry mounting method be used for specimens of soils that swell appreciably when in contact with water. If the wet mounting method is used for such soils, it will be necessary to obtain the specimen dimensions after the specimen has been mounted. In such cases, it will be necessary to determine the double thickness of the membrane, the double thickness of the wet filter paper strips (if used), and the combined height of the cap, base, and porous disks (including the thickness of filter disks if they are used) so that the appropriate values may be subtracted from the measurements.

7.2.1 *Wet Mounting Method*:

7.2.1.1 Fill the specimen drainage lines and the pore-water pressure measurement device with deaired water.

7.2.1.2 Saturate the porous disks by boiling them in water for at least 10 min and allow to cool to room temperature.

7.2.1.3 If filter-paper disks are to be placed between the porous disks and specimen, saturate the paper with water prior to placement.

7.2.1.4 Place a saturated porous disk on the specimen base and wipe away all free water on the disk. If filter-paper disks are used, placed on the porous disk. Place the specimen on the disk. Next, place another filter-paper disk (if used), porous disk and the specimen cap on top of the specimen. Check that the specimen cap, specimen, filter-paper disks (if used) and porous disks are centered on the specimen base.

7.2.1.5 If filter-paper strips or a filter-paper cage are to be used, saturate the paper with water prior to placing it on the specimen. To avoid hoop tension, do not cover more than 50 % of the specimen periphery with vertical strips of filter paper.

7.2.1.6 Proceed with 7.3.

7.2.2 *Dry Mounting Method*:

7.2.2.1 Dry the specimen drainage system. This may be accomplished by allowing dry air to flow through the system prior to mounting the specimen.

7.2.2.2 Dry the porous disks in an oven and then place the disks in a desiccator to cool to room temperature prior to mounting the specimen.

7.2.2.3 Place a dry porous disk on the specimen base and place the specimen on the disk. Next, place a dry porous disk and the specimen cap on the specimen. Check that the specimen cap, porous disks, and specimen are centered on the specimen base.

NOTE 13—If desired, dry filter-paper disks may be placed between the porous disks and specimen.

7.2.2.4 If filter-paper strips or a filter-paper cage are to be used, the cage or strips may be held in place by small pieces of tape at the top and bottom.

7.3 Place the rubber membrane around the specimen and seal it at the cap and base with two rubber O-rings or other positive seal at each end. A thin coating of silicon grease on the vertical surfaces of the cap and base will aid in sealing the membrane. If filter-paper strips or a filter-paper cage are used, do not apply grease to surfaces in contact with the filter-paper.

7.4 Attach the top drainage line and check the alignment of the specimen and the specimen cap. If the dry mounting method has been used, apply a partial vacuum of approximately 35 kPa (5 lb/in.^{2}) (not to exceed the consolidation

Copyright ASTM International

stress) to the specimen through the top drainage line prior to checking the alignment. If there is any eccentricity, release the partial vacuum, realign the specimen and cap, and then reapply the partial vacuum. If the wet mounting method has been used, the alignment of the specimen and the specimen cap may be checked and adjusted without the use of a partial vacuum.

8. Procedure

8.1 *Prior to Saturation*—After assembling the triaxial chamber, perform the following operations:

8.1.1 Bring the axial load piston into contact with the specimen cap several times to permit proper seating and alignment of the piston with the cap. During this procedure, take care not to apply an axial load to the specimen exceeding 0.5 % of the estimated axial load at failure. When the piston is brought into contact, record the reading of the deformation indicator to three significant digits.

8.1.2 Fill the chamber with the chamber liquid, being careful to avoid trapping air or leaving an air space in the chamber.

8.2 *Saturation*—The objective of the saturation phase of the test is to fill all voids in the specimen with water without undesirable prestressing of the specimen or allowing the specimen to swell. Saturation is usually accomplished by applying back pressure to the specimen pore water to drive air into solution after saturating the system by either: (*1*) applying vacuum to the specimen and dry drainage system (lines, porous disks, pore-pressure device, filter-strips or cage, and disks) and then allowing deaired water to flow through the system and specimen while maintaining the vacuum; or (2) saturating the drainage system by boiling the porous disks in water and allowing water to flow through the system prior to mounting the specimen. It should be noted that placing the air into solution is a function of both time and pressure. Accordingly, removing as much air as possible prior to applying back pressure will decrease the amount of air that will have to be placed into solution and will also decrease the back pressure required for saturation. In addition, air remaining in the specimen and drainage system just prior to applying back pressure will go into solution much more readily if deaired water is used for saturation. The use of deaired water will also decrease the time and back pressure required for saturation. Many procedures have been developed to accomplish saturation. The following are suggested procedures:

8.2.1 *Starting with Initially Dry Drainage System*—Increase the partial vacuum acting on top of the specimen to the maximum available vacuum. If the effective consolidation stress under which the strength is to be determined is less than the maximum partial vacuum, apply a lower partial vacuum to the chamber. The difference between the partial vacuum applied to the specimen and the chamber should never exceed the effective consolidation stress for the test and should not be less than 35 kPa (5 lb/in.^{2}) to allow for flow through the sample. After approximately 10 min, allow deaired water to percolate from the bottom to the top of the specimen under a differential vacuum of less than 20 kPa (3 lb/in.^{2}) (Note 14).

8.2.1.1 There should always be a positive effective stress of at least 13 kPa (2 lb/in.^{2}) at the bottom of the specimen during this part of the procedure. When water appears in the burette connected to the top of the specimen, close the valve to the bottom of the specimen and fill the burette with deaired water. Next, reduce the vacuum acting on top of the specimen through the burette to atmospheric pressure while simultaneously increasing the chamber pressure by an equal amount. This process should be performed slowly such that the difference between the pore pressure measured at the bottom of the specimen and the pressure at the top of the specimen should be allowed to equalize. When the pore pressure at the bottom of the specimen stabilizes, proceed with back pressuring of the specimen pore-water as described in . To check for equalization, close the drainage valves to the specimen and measure the pore pressure change until stable. If the change is less than 5 % of the chamber pressure, the pore pressure may be assumed to be stabilized.

NOTE 14—For saturated clays, percolation may not be necessary and water can be added simultaneously at both top and bottom.

8.2.2 *Starting with Initially Saturated Drainage System*—After filling the burette connected to the top of the specimen with deaired water, apply a chamber pressure of 35 kPa (5 lb/in.^{2}) or less and open the specimen drainage valves. When the pore pressure at the bottom of the specimen stabilizes, according to the method described in 8.2.1, or when the burette reading stabilizes, back pressuring of the specimen pore-water may be initiated.

8.2.3 *Back-Presuure Saturation*—To saturate the specimen, back pressuring is usually necessary. Fig. 3 [3] provides guidance on back pressure required to attain saturation. Additional guidance on the back-pressure process is given by Black[4] and Lee.[5]

8.2.3.1 *Applying Back Pressure*—Simultaneously increase the chamber and back pressure in steps with specimen drainage valves opened so that deaired water from the burette connected to the top and bottom of the specimen may flow into the specimen. To avoid undesirable prestressing of the specimen while applying back pressure, the pressures must be applied incrementally with adequate time between increments to permit equalization of pore-water pressure throughout the specimen. The size of each increment may range from 35 kPa (5 lb/in.^{2}) up to 140 kPa (20 lb/in. ^{2}), depending on the magnitude of the desired effective consolidation stress, and the percent saturation of the specimen just prior to the addition of the increment. The difference between the chamber pressure and the back pressure during back pressuring should not exceed 35 kPa unless it is deemed necessary to control swelling of the specimen during the procedure. The difference between the chamber and back pressure must also remain within ±5 % when the pressures are raised and within± 2 % when the

[3] Lowe, J., and Johnson, T. C., "Use of Back Pressure to Increase Degree of Saturation of Triaxial Test Specimens," *Proceedings, ASCE Research Conference on Shear Strength of Cohesive Soils* , Boulder, CO, 1960

[4] Black, A. W. and Lee, K. L. (1973), "Saturating Laboratory Samples by Back Pressure," *Journal of the Soil Mechanics and Foundation Division*, ASCE, Vol. 99, No. SM1, Proc. Paper 9484, Jan., pp. 75–93.

[5] Head, K. H., (1986), *Manual of Soil Laboratory Testing, Volume 3: Effective Stress Tests*, Pentech Press Limited, Graham Lodge, London, United Kingdom, pp. 787–796.

Copyright ASTM International

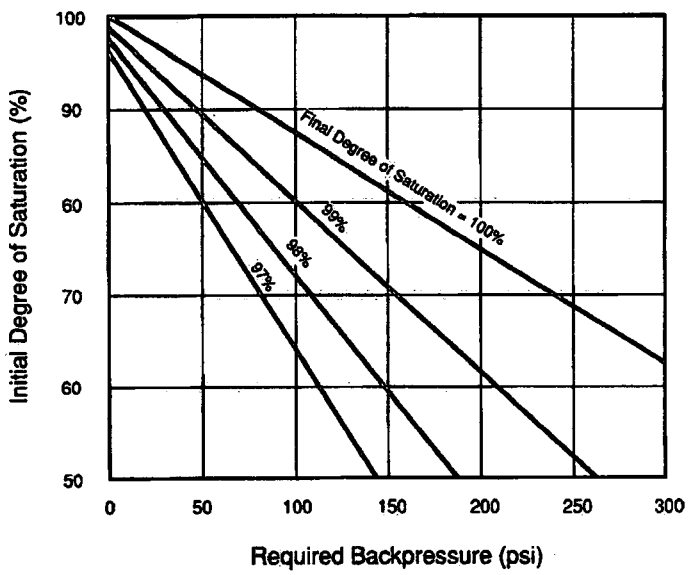

FIG. 3 Pressure to Attain Various Degrees of Saturation

pressures are constant. To check for equalization after application of a back pressure increment or after the full value of back pressure has been applied, close the specimen drainage valves and measure the change in pore-pressure over a 1-min interval. If the change in pore pressure is less than 5 % of the difference between the chamber pressure and the back pressure, another back pressure increment may be added or a measurement may be taken of the pore pressure Parameter B (see 8.2.4) to determine if saturation is completed. Specimens shall be considered to be saturated if the value of B is equal to or greater than 0.95, or if B remains unchanged with addition of back pressure increments.

NOTE 15—The relationships presented in Fig. 4 are based on the assumption that the water used for back pressuring is deaired and that the only source for air to dissolve into the water is air from the test specimen. If air pressure is used to control the back pressure, pressurized air will dissolve into the water, thus reducing the capacity of the water used for back pressure to dissolve air located in the pores of the test specimen. The problem is minimized by using a long (>5 m) tube that is impermeable to air between the air-water interface and test specimen, by separating the back-pressure water from the air by a material or fluid that is relatively impermeable to air, by periodically replacing the back-pressure water with deaired water, or by other means.

NOTE 16—Although the pore pressure Parameter B is used to determine adequate saturation, the B-value is also a function of soil stiffness. If the saturation of the sample is 100 %, the B-value measurement will increase with decreasing soil stiffness. Therefore, when testing soft soil samples, a B-value of 95 % may indicate a saturation less than 100 %.

NOTE 17—The back pressure required to saturate a compacted specimen may be higher for the wet mounting method than for the dry mounting method and may be as high as 1400 kPa (200 lb/in.^{2}).

NOTE 18—Many laboratories use differential pressure regulators and transducers to achieve the requirements for small differences between chamber and back pressure.

8.2.4 *Measurement of the Pore Pressure Parameter B*—Determine the value of the pore pressure Parameter B in accordance with 8.2.4.1 through 8.2.4.4. The pore pressure Parameter B is defined by the following equation:

$$B = \Delta u / \Delta \sigma_3 \quad (2)$$

where:

Δu = change in the specimen pore pressure that occurs as a result of a change in the chamber pressure when the specimen drainage valves are closed, and

$\Delta \sigma_3$ = change in the chamber pressure.

8.2.4.1 Close the specimen drainage valves, record the pore pressure, to the nearest 0.7 kPa (0.1 psi), and increase the chamber pressure by 70 kPa (10 lb/in.^{2}).

8.2.4.2 After approximately 2 min, determine and record the maximum value of the induced pore pressure to the nearest 0.7 kPa (0.1 psi),. For many specimens, the pore pressure may decrease after the immediate response and then increase slightly with time. If this occurs, values of Δu should be plotted with time and the asymptotic pore pressure used as the change in pore pressure. A large increase in Δu with time or values of Δu greater than $\Delta \sigma_3$ indicate a leak of chamber fluid into the specimen. Decreasing values of Δu with time may indicate a leak in that part of the pore pressure measurement system located outside of the chamber.

8.2.4.3 Calculate the B-value using Eq 2.

8.2.4.4 Reapply the same effective consolidation stress as existed prior to the B-value by reducing the chamber pressure by 70 kPa (10 lb/in.^{2}) or by alternatively, increasing the back pressure by 70 kPa. If B is continuing to increase with increasing back pressure, continue with back pressure saturation. If B is equal to or greater than 0.95 or if a plot of B versus back pressure indicates no further increase in B with increasing back pressure, initiate consolidation.

8.3 *Consolidation*—The objective of the consolidation phase of the test is to allow the specimen to reach equilibrium in a drained state at the effective consolidation stress for which a strength determination is required. During consolidation, data is obtained for use in determining when consolidation is complete and for computing a rate of strain to be used for the shear portion of the test. The consolidation procedure is as follows:

Copyright ASTM International

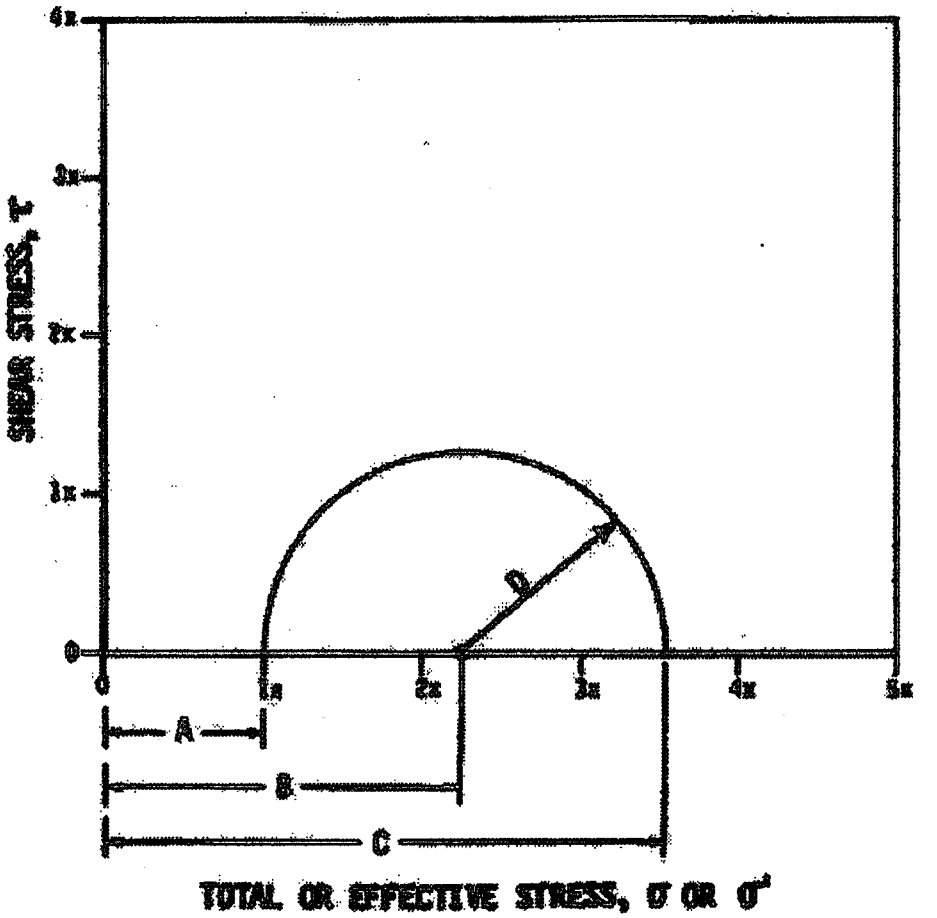

A = TOTAL OR EFFECTIVE MINOR PRINCIPAL STRESS (σ_3 or σ_3')
B = AVERAGE OF TOTAL OR EFFECTIVE PRINCIPAL STRESSES
C = TOTAL OR EFFECTIVE MAJOR PRINCIPAL STRESS (σ_1 or σ_1')
D = RADIUS OF THE MOHR'S CIRCLE; HALF THE PRINCIPAL STRESS DIFFERENCE

FIG. 4 Construction of Mohr Stress Circle

8.3.1 When the saturation phase of the test is completed, bring the axial load piston into contact with the specimen cap, and record the reading on the deformation indicator to three significant digits. During this procedure, take care not to apply an axial load to the specimen exceeding 0.5 % of the estimated axial load at failure. After recording the reading, raise the piston a small distance above the specimen cap, and lock the piston in place.

8.3.2 With the specimen drainage valves closed, hold the maximum back pressure constant and increase the chamber pressure until the difference between the chamber pressure and the back pressure equals the desired effective consolidation pressure. Consolidation in stages is required when filter strips for radial drainage are used, and the load increment ratio shall not exceed two.

8.3.3 Obtain an initial burette reading, and, then, open appropriate drainage valves so that the specimen may drain from both ends into the burette. At increasing intervals of elapsed time (0.1, 0.2, 0.5, 1, 2, 4, 8, 15, and 30 min and at 1, 2, 4, and 8 h, and so forth) observe and record the burette readings, and, after the 15-min reading, record the accompanying deformation indicator readings obtained by carefully bringing the piston in contact with the specimen cap. If burette and deformation indicator readings are to be plotted against the square root of time, the time intervals at which readings are taken may be adjusted to those that have easily obtained square roots, for example, 0.09, 0.25, 0.49, 1, 4, and 9 min, and so forth. Depending on soil type, time intervals may be changed to convenient time intervals which allow for adequate definition of volume change versus time.

Copyright ASTM International

NOTE 19—In cases where significant amounts of fines may be washed from the specimen because of high initial hydraulic gradients, it is permissible to gradually increase the chamber pressure to the total desired pressure over a period with the drainage valves open. If this is done, recording of data should begin immediately after the total pressure is reached.

8.3.4 Plot the burette and deformation indicator readings versus either the logarithm or square root of elapsed time. Allow consolidation to continue for at least one log cycle of time or one overnight period after 100 % primary consolidation has been achieved as determined in accordance with one of the procedures outlined in Test Method D 2435. A marked deviation between the slopes of the burette and deformation indicator curves toward the end of consolidation based on deformation indicator readings indicates leakage of fluid from the chamber into the specimen, and the test shall be terminated.

8.3.5 Determine the time for 50 % primary consolidation, t_{50}, in accordance with one of the procedures outlined in Test Method D 2435.

8.4 *Shear*—During shear, the chamber pressure shall be kept constant while advancing the axial load piston downward against the specimen cap using controlled axial strain as the loading criterion. Specimen drainage is not permitted during shear.

8.4.1 *Prior to Axial Loading*—Before initiating shear, perform the following:

8.4.1.1 By opening or closing the appropriate valves, isolate the specimen so that during shear the specimen pore-water pressure will be measured by the pore-pressure measurement device and no drainage will occur.

8.4.1.2 Place the chamber in position in the axial loading device. Be careful to align the axial loading device, the axial load-measuring device, and the triaxial chamber to prevent the application of a lateral force to the piston during shear.

8.4.1.3 Bring the axial load piston into contact with the specimen cap to permit proper seating and realignment of the piston with the cap. During this procedure, care should be taken not to apply an axial load to the specimen exceeding 0.5 % of the estimated axial load at failure. If the axial load-measuring device is located outside of the triaxial chamber, the chamber pressure will produce an upward force on the piston that will react against the axial loading device. In this case, start shear with the piston slightly above the specimen cap, and before the piston comes into contact with the specimen cap, either (*1*) measure and record the initial piston friction and upward thrust of the piston produced by the chamber pressure and later correct the measured axial load, or (*2*) adjust the axial load-measuring device to compensate for the friction and thrust. The variation in the axial load-measuring device reading should not exceed 0.1 % of the estimated failure load when the piston is moving downward prior to contacting the specimen cap. If the axial load-measuring device is located inside the chamber, it will not be necessary to correct or compensate for the uplift force acting on the axial loading device or for piston friction. However, if an internal load-measuring device of significant flexibility is used in combination with an external deformation indicator, correction of the deformation readings may be necessary. In both cases, record the initial reading on the pore-water pressure measurement device to the nearest 0.7 kPa (0.1 psi) immediately prior to when the piston contacts the specimen cap and the reading on the deformation indicator to three significant digits when the piston contacts the specimen cap.

8.4.1.4 Check for pore pressure stabilization. Record the pore pressure to the nearest 0.7 kPa (0.1 psi). Close the drainage valves to the specimen, and measure the pore pressure change until stable. If the change is less than 5 % of the chamber pressure, the pore pressure may be assumed to be stabilized.

8.4.2 *Axial Loading*—Apply axial load to the specimen using a rate of axial strain that will produce approximate equalization of pore pressures throughout the specimen at failure. Assuming failure will occur after 4 %, a suitable rate of strain, $'\epsilon$, may be determined from the following equation:

$$'\epsilon = 4\ \%/(10\ t_{50}) \tag{3}$$

where:

t_{50} = time value obtained in 8.3.5.

If, however, it is estimated that failure will occur at a strain value lower than 4 %, a suitable strain rate may be determined using Eq 3 by replacing 4 % with the estimated failure strain. This rate of strain will provide for determination of accurate effective stress paths in the range necessary to define effective strength envelopes.

8.4.2.1 At a minimum, record load and deformation to three significant digits, and pore-water pressure values to the nearest 0.7 kPa (0.1 psi), at increments of 0.1 to 1 % strain and, thereafter, at every 1 %. Take sufficient readings to define the stress-strain curve; hence, more frequent readings may be required in the early stages of the test and as failure is approached. Continue the loading to 15 % strain, except loading may be stopped when the principal stress difference (deviator stress) has dropped 20 % or when 5 % additional axial strain occurs after a peak in principal stress difference (deviator stress).

NOTE 20—The use of a manually adjusted null-indicating device will require nearly continuous attention to ensure the criterion for undrained shear.

9. Removing Specimen

9.1 When shear is completed, perform the following:

9.1.1 Remove the axial load and reduce the chamber and back pressures to zero.

9.1.2 With the specimen drainage valves remaining closed, quickly remove the specimen from the apparatus so that the specimen will not have time to absorb water from the porous disks.

9.1.3 Remove the rubber membrane (and the filter-paper strips or cage from the specimen if they were used), and determine the water content of the total specimen in accordance with the procedure in Test Method D 2216. (Free water remaining on the specimen after removal of the membrane should be blotted away before obtaining the water content.) In cases where there is insufficient material from trimmings for index property tests, that is, where specimens have the same diameter as the sampling tube, the specimen should be weighed prior to removing material for index property tests and a representative portion of the specimen used to determine its

Copyright ASTM International

final water content. Prior to placing the specimen (or portion thereof) in the oven to dry, sketch or photograph the specimen showing the mode of failure (shear plane, bulging, and so forth).

10. Calculation

10.1 Measurements and calculations shall contain three significant digits.

10.2 *Initial Specimen Properties*—Using the dry mass of the total specimen, calculate and record the initial water content, volume of solids, initial void ratio, initial percent saturation, and initial dry unit weight. Calculate the specimen volume from values measured in 6.2 or 6.3. Calculate the volume of solids by dividing the dry mass of the specimen by the specific gravity of the solids (Note 20) and dividing by the density of water. Calculate the void ratio by dividing the volume of voids by the volume of solids where the volume of voids is assumed to be the difference between the specimen volume and the volume of the solids. Calculate dry density by dividing the dry mass of the specimen by the specimen volume.

NOTE 21—The specific gravity of solids can be determined in accordance with Test Method D 854 or it may be assumed based on previous test results.

10.3 *Specimen Properties After Consolidation*—Calculate the specimen height and area after consolidation as follows:

10.3.1 Height of specimen after consolidation, H_c, is determined from the following equation:

$$H_c = H_o - \Delta H_o \tag{4}$$

where:

H_o = initial height of specimen, and
ΔH_o = change in height of specimen at end of consolidation.

See Fig. 4.

10.3.2 The cross-sectional area of the specimen after consolidation, A_c, shall be computed using one of the following methods. The choice of the method to be used depends on whether shear data are to be computed as the test is performed (in which case Method A would be used) or on which of the two methods, in the opinion of a qualified person, yield specimen conditions considered to be most representative of those after consolidation. Alternatively, the average of the two calculated areas may be appropriate.

10.3.2.1 *Method A*:

$$A_c = (V_o - \Delta V_{sat} - \Delta V_c) / H_c \tag{5}$$

where:

V_o = initial volume of specimen,
ΔV_c = change in volume of specimen during consolidation as indicated by burette readings, and
ΔV_{sat} = change in volume of specimen during saturation as follows:
ΔV_{sat} = $3V_o[\Delta H_s/H_o]$

where:

ΔH_s = change in height of the specimen during saturation.

10.3.2.2 *Method B*:

$$Ac = (V_{wf} + V_s) / H_c \tag{6}$$

where:

V_{wf} = final volume of water (based on final water content), and
V_s = volume of solids as follows:
V_s = $w_s/(G_s p_w)$

where:

w_s = specimen dry mass,
G_s = specific gravity of solids, and
p_w = density of water.

10.3.3 Using the calculated dimensions of the specimen after consolidation, and assuming that the water content after consolidation is the same as the final water content, calculate the consolidated void ratio and percent saturation.

NOTE 22—The specimen will absorb water from the porous disks and drainage lines during the time it is being removed from the apparatus. When this effect is significant, Method A will yield more reasonable values.

NOTE 23— In this test method, the equations are written such that compression and consolidation are considered positive.

10.4 *Shear Data*:

10.4.1 Calculate the axial strain, ϵ_1, for a given applied axial load as follows:

$$\epsilon_1 = \Delta H / H_c \tag{7}$$

where:

ΔH = change in height of specimen during loading as determined from deformation indicator readings, and
H_c = height of specimen after consolidation.

10.4.2 Calculate the cross-sectional area, A, for a given applied axial load as follows:

$$A = A_c / (1 - \epsilon_1) \tag{8}$$

where:

A_c = average cross-sectional area of the specimen after consolidation, and
ϵ_1 = axial strain for the given axial load.

NOTE 24—The cross-sectional area computed in this manner is based on the assumption that the specimen deforms as a right circular cylinder during shear. In cases where there is localized bulging, it may be possible to determine more accurate values for the area based on specimen dimension measurements obtained after shear.

10.4.3 Calculate the principal stress difference (deviator stress), $\sigma_1 - \sigma_3$, for a given applied axial load as follows:

$$\sigma_1 - \sigma_3 = P / A \tag{9}$$

where:

P = given applied axial load (corrected for uplift and piston friction if required as obtained in 8.4.1.3), and
A = corresponding cross-sectional area.

10.4.3.1 *Correction for Filter-Paper Strips*— For vertical filter-paper strips which extend over the total length of the specimen, apply a filter-paper strip correction to the computed values of the principal stress difference (deviator stress), if the error in principal stress difference (deviator stress) due to the strength of the filter-paper strips exceeds 5 %.

(*1*) For values of axial strain above 2 %, use the following equation to compute the correction:

$$\Delta(\sigma_1 - \sigma_3) = K_{fp} P_{fp} / A_c \quad (10)$$

where:

$\Delta(\sigma_1 - \sigma_3)$ = correction to be subtracted from the measured principal stress difference (deviator stress),
K_{fp} = load carried by filter-paper strips per unit length of perimeter covered by filter-paper,
P_{fp} = perimeter covered by filter-paper, and
A_c = cross-sectional area of specimen after consolidation.

(2) For values of axial strain of 2 % or less, use the following equation to compute the correction:

$$\Delta(\sigma_1 - \sigma_3) = 50\epsilon_1 K_{fp} P_{fp} / A_c \quad (11)$$

where:

ϵ_1 = axial strain (decimal form) and other terms are the same as those defined in Subparagraph (*1*) of 10.4.3.1.

NOTE 25—For filter-paper generally used in triaxial testing, K_{fp} is approximately 0.19 kN/m (1.1 lb/in.).

10.4.3.2 *Correction for Rubber Membrane*— Use the following equation to correct the principal stress difference (deviator stress) for the effect of the rubber membrane if the error in principal stress difference (deviator stress) due to the strength of the membrane exceeds 5 %:

$$\Delta(\sigma_1 - \sigma_3) = (4E_m t_m \epsilon) / D_c \quad (12)$$

where:

$\Delta(\sigma_1 - \sigma_3)$ = correction to be subtracted from the measured principal stress difference (deviator stress),
D_c = $\sqrt{4A_c/\pi}$ = diameter of specimen after consolidation,
E_m = Young's modulus for the membrane material,
t_m = thickness of the membrane, and
ϵ_1 = axial strain (decimal form).

(*1*) The Young's modulus of the membrane material may be determined by hanging a 15-mm (0.5-in.) circumferential strip of membrane using a thin rod, placing another rod through the bottom of the hanging membrane, and measuring the force per unit strain obtained by stretching the membrane. The modulus value may be computed using the following equation:

$$E_m = (F / A_m) / (\Delta L / L) \quad (13)$$

where:

E_m = Young's modulus of the membrane material,
F = force applied to stretch the membrane,
L = unstretched length of the membrane,
ΔL = change in length of the membrane due to the force, F, and
A_m = area of the membrane = $2\ t_m\ W_s$

where:

t_m = thickness of the membrane, and
W_s = width of circumferential strip, 0.5 in. (15 mm).

NOTE 26—A typical value of E_m for latex membranes is 1400 kPa (200 lb/in.).

NOTE 27—The corrections for filter-paper strips and membranes are based on simplified assumptions concerning their behavior during shear. Their actual behavior is complex, and there is not a consensus on more exact corrections.

10.4.4 Calculate the effective minor principal stress, σ'_3 for a given applied axial load as follows:

$$\sigma'_3 = \sigma_3 - \Delta u \quad (14)$$

where:

σ_3 = effective consolidation stress, and
Δu = induced pore-water pressure at the given axial load (total pore-water pressure minus the total back pressure).

10.5 *Principal Stress Difference (Deviator Stress) and Induced Pore-Water Pressure versus Strain Curves*—Prepare graphs showing relationships between principal stress difference (deviator stress) and induced pore-water pressure with axial strain, plotting deviator stress and induced pore-water pressure as ordinates and axial strain as abscissa. Select the principal stress difference (deviator stress) and axial strain at failure in accordance with 3.2.3.

10.6 *p′ – q Diagram*— Prepare a graph showing the relationship between p', $(\sigma'_1+\sigma'_3)/2$ and q, $(\sigma_1 - \sigma_3)/2$, plotting q as ordinate and p' as abscissa using the same scale. The value of p' for a given axial load may be computed as follows:

$$p' = ((\sigma_1 - \sigma_3) + 2\sigma'_3) / 2 \quad (15)$$

where:

$\sigma_1 - \sigma_3$ = principal stress difference (deviator stress), and
σ'_3 = effective minor principal stress.

10.7 Determine the major and minor principal stresses at failure based on total stresses, σ_{1f} and σ_{3f} respectively, and on effective stresses, σ'_{1f} and σ'_{3f} respectively, as follows:

$$\sigma_{3f} = \text{effective consolidation stress}, \quad (16)$$

$$\sigma_{1f} = (\sigma_1 - \sigma_3) \text{ at failure } + \sigma_{3f}, \quad (17)$$

$$\sigma'_{3f} = \sigma_{3f} - \Delta u_f, \text{ and} \quad (18)$$

$$\sigma'_{1f} = (\sigma_1 - \sigma_3) \text{ at failure } + \sigma'_{3f} \quad (19)$$

where Δu_f is the induced pore-water pressure at failure.

10.8 *Mohr Stress Circles*—If desired, construct Mohr stress circles at failure based on total and effective stresses on an arithmetic plot with shear stress as ordinate and normal stress as abscissa using the same scales. The circle based on total stresses is drawn with a radius of one half the principal stress difference (deviator stress) at failure with its center at a value equal to one half the sum of the major and minor total principal stresses. The Mohr stress circle based on effective stresses is drawn in a similar manner except that its center is at a value equal to one half the sum of the major and minor effective principal stresses.

11. Report: Test Data Sheet(s)/Form(s)

11.1 The methodology used to specify how data are recorded on the data sheet(s)/form(s), as given below, is covered in 7.2.1.3.

11.2 Record as a minimum the following general information (data):

11.2.1 Identification data and visual description of specimen, including soil classification and whether the specimen is undisturbed, compacted, or otherwise prepared,

Copyright ASTM International

11.2.2 Values of plastic limit and liquid limit, if determined in accordance with Test Method D 4318,

11.2.3 Value of specific gravity of solids and notation if the value was determined in accordance with Test Method D 854 or assumed,

11.2.4 Particle-size analysis, if determined in accordance with Test Method D 422,

11.2.5 Initial specimen dry unit weight, void ratio, water content, and percent saturation, (specify if the water content specimen was obtained from cuttings or the entire specimen),

NOTE 28—The specific gravity determined in accordance with Test Method D 854 is required for calculation of the saturation. An assumed specific gravity may be used provided it is noted in the test report that an assumed value was used.

11.2.6 Initial height and diameter of specimen,

11.2.7 Method followed for specimen saturation (that is, dry or wet method),

11.2.8 Total back pressure,

11.2.9 The pore pressure Parameter B at the end of saturation,

11.2.10 Effective consolidation stress,

11.2.11 Time to 50 % primary consolidation,

11.2.12 Specimen dry unit weight, void ratio, water content, and percent saturation after consolidation,

11.2.13 Specimen cross-sectional area after consolidation and method used for determination,

11.2.14 Failure criterion used,

11.2.15 The value of the principal stress difference (deviator stress) at failure and the values of the effective minor and major principal stresses at failure, (indicate when values have been corrected for effects due to membrane or filter strips, or both),

11.2.16 Axial strain at failure, percent,

11.2.17 Rate of strain, percent per minute,

11.2.18 Principal stress difference (deviator stress) and induced pore-water pressure versus axial strain curves as described in 10.5,

11.2.19 The $p' - q$ diagram as described in 10.6,

11.2.20 Mohr stress circles based on total and effective stresses, (optional),

11.2.21 Slope of angle of the failure surface (optional),

11.2.22 Failure sketch or photograph of the specimen, and

11.2.23 Remarks and notations regarding any unusual conditions such as slickensides, stratification, shells, pebbles, roots, and so forth, or other information necessary to properly interpret the results obtained, including any departures from the procedure outlined.

12. Precision and Bias

12.1 *Precision*—Test data on precision is not presented due to the nature of the soil materials tested by this procedure. It is either not feasible or too costly at this time to have ten or more laboratories participate in a round-robin testing program. Subcommittee D18.05 is seeking any data from users of this test method that might be used to make a limited statement on precision.

12.2 *Bias*—There is no accepted reference value for this test method, therefore, bias cannot be determined.

13. Keywords

13.1 back pressure saturation; cohesive soil; consolidated undrained strength; strain-controlled loading; stress-strain relationships; total and effective stresses

SUMMARY OF CHANGES

In accordance with Committee D18 policy, this section identifies the location of changes made to this standard since the last edition (2002) that may impact the use of this standard.

(1) The cap connection was changed to be a requirement of the chamber equipment in 5.4, rather than a requirement specific to the baseplate.

(2) Pressure/volume controller were added as acceptable vacuum control devices in 5.6.

(3) A requirement was added for isolating air/water interfaces (if used) from the pressure systems in 5.6.

(4) Note 15 was made 7.2.1.3, making wetting of filter paper disks mandatory when using the wet mounting method.

(5) In section 8.2.3, references concerning back pressure saturation were provided. An associated figure was added as Figure 3. subsequent sections, notes, and figures were renumbered.

(6) Footnotes 3, 4, and 5 were added.

ASTM International takes no position respecting the validity of any patent rights asserted in connection with any item mentioned in this standard. Users of this standard are expressly advised that determination of the validity of any such patent rights, and the risk of infringement of such rights, are entirely their own responsibility.

This standard is subject to revision at any time by the responsible technical committee and must be reviewed every five years and if not revised, either reapproved or withdrawn. Your comments are invited either for revision of this standard or for additional standards and should be addressed to ASTM International Headquarters. Your comments will receive careful consideration at a meeting of the responsible technical committee, which you may attend. If you feel that your comments have not received a fair hearing you should make your views known to the ASTM Committee on Standards, at the address shown below.

This standard is copyrighted by ASTM International, 100 Barr Harbor Drive, PO Box C700, West Conshohocken, PA 19428-2959, United States. Individual reprints (single or multiple copies) of this standard may be obtained by contacting ASTM at the above address or at 610-832-9585 (phone), 610-832-9555 (fax), or service@astm.org (e-mail); or through the ASTM website (www.astm.org).

Copyright ASTM International

APPENDIX B

Treatability Study Work Plan

TREATABILITY STUDY WORK PLAN
FOR
SOIL SOLIDIFICATION/STABILIZATION

Prepared for

Mercury Refining Company Remedial Design Group

May 2010

Project Number: 137692.002.001

BROWN AND CALDWELL

Associates

110 Commerce Drive

Allendale, New Jersey 07401

TREATABILITY STUDY WORK PLAN FOR SOIL SOLIDIFICATION/STABILIZATION

Objective

A solidification/stabilization (S/S) treatability study (TS), as outlined below, will be performed in accordance with USEPA *Guidance for Conducting Treatability Studies under CERCLA*, November 1992, on soil collected from the Mercury Refining Superfund site located in the towns of Colonie and Guilderland, Albany County, New York. The goal of the TS is to identify candidate solidification/stabilization treatment mixtures capable of minimizing the leachability of mercury from contaminated soils as determined by the Synthetic Precipitation Leachate Procedure (SPLP). The soil treatability data will be used to prepare cost estimates and design specifications with regard to full-scale treatment, material excavation, transport and storage.

The TS, including all analytical services, will be conducted by a qualified Contractor with experience performing bench-scale treatability testing of S/S. The schedule for conducting the TS is presented in the RDWP. This TS Work Plan presents information regarding the protocols that will be followed in completing the TS.

Methods of Analysis

Following methods of analysis will be utilized during the TS:

Analysis	Method
Total Mercury	EPA SW846 7471A
SPLP Mercury	EPA Method 1312
Moisture Content	ASTM D2216
Sieve Analysis	ASTM D422
Organic Content	ASTM D2974
pH	EPA Method 9045C
Unconfined Compressive Strength	ASTM D2216
Density	ASTM D5057-90

Sample Receipt and Untreated Material Characterization

As part of the Remedial Design Investigation, wells will be installed and sampled for dissolved mercury. Following receipt and evaluation of the groundwater analytical results, TS samples will be collected from soil in area where the mercury concentration in ground water exceeds the cleanup level of 0.7 µg/L. Samples for mixture development will be collected from two locations: one 5-gallon bucket from the location where the highest groundwater concentrations have been identified, and one 5-gallon bucket from the location where the concentrations are more representative of an average of the entire Solidification/ Stabilization area. Elemental mercury has been previously identified within the soils in an area corresponding to the highest observed concentrations. Therefore, it is likely that the high-concentration sample may contain elemental mercury.

Brown and Caldwell will collect three additional samples. The additional samples will not be used for the mixture design with respect to the leachability. Instead, once the mixture design is established based on the highest and low mercury concentration samples, these additional samples will be utilized to evaluate the feasibility of construction methods considering the range of soil types that may be encountered at the site. In addition the mixture additives, the construction methods used to apply soil stabilization depend primarily on the soil type. Therefore, the collection of the three additional samples will be determined by the soil classification, and not by the mercury concentration.

Samples will be collected by Brown and Caldwell and shipped to the laboratory performing the TS per an EPA approved work plan.

The untreated materials will be logged in and placed into secure storage upon receipt. Each untreated sample will then be homogenized using stainless steel mixing instruments and gently mixed using low energy mixing techniques to ensure a uniform material prior to treatability testing. Any large or agglomerated particles will be broken to more manageable sizes. For bench-scale testing, all particles larger than 0.5 inches in diameter will be removed from the untreated samples.

After homogenization, representative aliquots of the untreated samples will be collected for analytical and/or geotechnical characterization testing. Potential off-gassing from the samples will be managed using standard laboratory health and safety procedures, including proper handling of samples by health and safety-trained personnel, the use of exhaust hoods for all testing, and if necessary the use of respirators equipped for mercury vapor. Characterization testing to be performed on the untreated soils will include total mercury (SW846 7471A), SPLP (EPA Method 1312), moisture content (ASTM D2216), sieve analysis (ASTM D422), organic content (ASTM D2974) and pH testing (EPA Method 9045C) in accordance with the RDWP. These analyses will provide a baseline for the evaluation of the study results. Unused sample portions will be returned to the original shipping containers for storage.

Mercury Stabilization Treatment for Soils

Process Overview

Testing will be conducted on the mercury-impacted soil using a phased approach. Once the baseline characterization of the untreated soil is complete, preliminary screening mixtures will be developed in order to evaluate a range of stabilization reagents and/or addition rates. After the preliminary evaluation has been completed, additional mixtures will be developed to further optimize and evaluate treatment designs identified during the previous phase. Mixtures selected following the optimization phase will be re-developed for the purpose of repeatability evaluation. Upon completion of each phase, the candidate mixture designs will be subjected to analytical characterization analyses. Once the recommended mixture is identified, it will be used to conduct analysis of constructability methods in conjunction with representative soil types for the site.

Preliminary Evaluation

Based on the results of untreated soil material characterization, reagents and addition rates that have been effective at improving the physical properties of similar materials while reducing mercury leachability will be identified. Based on the preliminary assessment, the likely reagents include, but are not limited to, Portland cement, slag cement, hydrated lime, sodium sulfide, impregnated activated carbon and calcium polysulfide. It is anticipated that a total of 18 mixtures of the untreated soil material will be developed in an effort to evaluate a range of reagents and addition rates.

Each mixture will be developed by placing an aliquot of untreated soil into a blending chamber. Reagent will be added to the untreated soil and blended at a rate of approximately 30 to 40 rotations per minute (rpm) until visually homogeneous, approximately 60 to 90 seconds. Immediately following mixture development, the mixture's unit weight will be measured and the mixtures will be placed into cylindrical molds for curing. Each mixture will be allowed to cure for a period of seven days in a humid environment maintained at a temperature of 18 to 24°C. Upon completion of the curing period, each mixture will be submitted for SPLP mercury analysis (EPA Method 1312) and pH analysis (EPA Method 9045C). Monitoring or testing will also be performed to evaluate the physical/geotechnical properties of the treated samples, as outlined below.

Pocket penetrometer readings will be conducted at three, five, and seven days of curing. After seven days of curing, the Contractor will conduct Unconfined Compressive Strength (UCS) testing in accordance with ASTM Method D2166. First, the cured sample specimen will be removed from the cylindrical mold. The weight and physical dimensions of the sample will be determined and recorded on the appropriate data sheet. The specimen will be then placed in the load frame and compressed at a rate of 1% strain per minute until the sample fails or 15% strain is achieved. Throughout the testing, the Contractor will document the load at specific strain values. A representative aliquot of the post test specimen will be subjected to moisture content testing.

Optimization

Based on the results of preliminary stabilization treatment evaluations, treatment designs will be identified for further optimization and evaluation. A total of six mixtures will be developed. Treatment and testing will be in direct accordance with protocols used during the preliminary evaluation.

Repeatability Evaluation

The results of the preliminary evaluation and optimization phases will be reviewed and up to three mixture designs will be selected for the evaluation of repeatability of the results. The mixtures will be analyzed in accordance with the procedures used during the preliminary evaluation.

Evaluation of Construction Methods

A representative mixture design will be selected from among the three options used for the repeatability evaluation. The representative mixture will be applied to the three soil type samples determined to be critical from the standpoint of evaluating the feasibility of construction methods. The mixtures will be analyzed in accordance with the procedures used during the preliminary evaluation. In addition, the representative mixture, as applied to the three critical soil types, will be tested for density to quantify the soil swelling factor. Density tests will be performed prior to, and after the addition of the recommended mixture.

Reporting

Throughout the duration of the project, the Contractor will provide interim facsimiles as data is received. All of the analytical results for total and SPLP mercury will be data validated in accordance with the RDWP. The Contractor will prepare a Treatability Study Report presenting the results of all testing and detailed descriptions of all protocols used during the TS. Recommendations and conclusions based on the results of the TS will also be provided in the report.

It is assumed that the TS will result in the identification of at least one mixture that would achieve the remedial objectives, and could be applied within the soils present at the site. If; however, additional analysis is needed to finalize the design, the TS may have to be expanded under a separate scope.

In accordance with SOW, the TS results will be incorporated into the Remedial Design.

The structure of the Treatability Study Report will be as follows:

1.0 Introduction
2.0 Untreated Waste Receipt
3.0 Untreated Soil Characterization
4.0 Stabilization Treatment
    4.1 Preliminary Evaluations
    4.2 Optimization Evaluations
    4.3 Repeatability Evaluations
    4.4 Evaluation of Construction Methods
5.0 Discussion of Results

Tables
1. Untreated Soil Baseline Characterization
2. Preliminary Soil Stabilization Evaluations
3. Optimizations Soil Stabilization Evaluations
4. Repeatability Evaluations
5. Evaluation of Construction Methods

Attachments
A. Chain-of-Custody
B. Stabilization Evaluation Data Reports

APPENDIX C

Green Remediation Plan

GREEN REMEDIATION PLAN

Prepared for
Mercury Refining Company Remedial Design Group

May 2010

Project Number: 137692.002.001

BROWN AND CALDWELL
Associates
110 Commerce Drive
Allendale, New Jersey 07401

GREEN REMEDIATION PLAN

This green remediation plan has been prepared under guidance provided by USEPA Region 2 entitled the "Clean & Green Policy."[1] The goal of this guidance is to enhance the environmental benefits of federal cleanup programs by promoting technologies and practices that are sustainable.

Green remediation can be defined as the practice of considering all environmental effects of remedy implementation and incorporating options to minimize the environmental footprints of cleanup actions.[2] The objectives of the Clean & Green Policy are to:

- Protect human health and the environment by achieving remedial action goals;
- Support human and ecological use and reuse of remediated land;
- Minimize impacts to water quality and water resources;
- Reduce air emissions and greenhouse gas production;
- Minimize material use and waste production; and
- Conserve natural resources and energy.

As the remedial action described in this work plan is a Superfund cleanup performed by a Responsible Party, the Clean & Green policy applies.

USEPA Region 2 has identified several green remediation technologies which will serve as touchstones for remedial actions. These technologies should be seen as the "starting point" for Superfund cleanups, and USEPA guidance states that these technologies will be standard unless a site-specific evaluation demonstrates impracticability or favors an alternative green approach. These include:

- Use of 100% of electricity from renewable sources;
- Use of concrete made with coal combustion products replacing a portion of traditional cement;
- Use of clean diesel fuels and technologies; and
- Methane capture at landfills.

The remedial strategies at this site include soil and sediment removal, in-situ and ex-situ of soils to stabilize contaminant concentrations at the site, and institutional controls to control contact with residual materials at the site. A brief discussion of potential applications of the first three green remediation technologies at the site follows. There is not a landfill at this site, nor will there be one installed, so this fourth technology

---

[1] EPA Region 2 "Clean & Green" Policy http://www.epa.gov/region02//superfund/green_remediation/policy.html

[2] Superfund Green Remediation Strategy, August 2009. Published by U.S. Environmental Protection Agency Office of Solid Waste and Emergency Response Office of Superfund Remediation and Technology Innovation http://www.epa.gov/superfund/greenremediation/sf-gr-strategy.pdf

opportunity is not discussed herein. As guided by USEPA, these technologies will be evaluated during the remedy selection, preparation of bid specifications, contractor selection, remedy implementation, and remedial action report. They will be implemented unless impracticable, or unless an alternative green approach can be identified.

Renewable Energy

Environmental remediation projects frequently require the use of purchased electricity on site. This electricity may be used to run remediation equipment, power construction trailers, and power security lighting or monitoring equipment. In order to achieve USEPA's stated priority for the use of 100% renewable energy, during contracting and purchase of energy for use at this site, agreements will be pursued with local power providers for supply of energy generated by renewable methods. This can include generation from solar, wind, or hydro power, or combustion of landfill gases such as methane, among others. In general there is a slight mark-up in price for these renewably generated energy sources, and this cost will be tracked along the life of the project. Reasonable efforts will be made to work with local energy suppliers in order to identify the best source of renewably generated energy. The selection of the renewably generated energy program will be made to the greatest extent practicable.

Use of Combustion By-products in place of Concrete

Coal-fired power plants generate quantities of ash byproduct during generation of electricity. This byproduct can be generally split into two groups: fly ash, a light powdery substance collected in the emission control systems of power plants, and bottom ash, a coarser material collected at the bottom of the coal furnace. Both ash products have a composition that is generally similar to that of natural clays and limestone. Fly ash can be used in concrete to replace the clay and limestone components of Portland cement. The resulting concrete is stronger and less permeable, as well as less expensive. In addition fuel costs and associated greenhouse gas emissions are reduced during production of cement, as the fly ash doesn't require the same "preheating" as a clay or limestone component. Bottom ash is generally recycled for use as a crushed rock or sand substitute.

While replacing traditional Portland cement with cement that is amended with combustion by-products will save energy, greenhouse gases during production, and address and handle waste generated during the coal combustion process, there is limited application of concrete at this site. However, concrete used for capping, construction of temporary structures, and other on-site materials will be specified to contain combustion by-products to the extent they are readily available, in order to address this green technology requirement. Guidance and supply information from the Coal Combustion Products Partnership[3] will be used during treatability studies and the specification process to determine where combustion byproducts can be best and most practically utilized at this site.

Clean Diesel Fuels and Technologies

Clean diesel fuels and technologies can be implemented at a site in a variety of ways. Clean diesel can include low-sulfur fuels or fuels which include a biodiesel component. These fuels have lower greenhouse gas and particulate emissions and are better for the immediate and global environment. In addition, diesel equipment

[3] Wastes – Partnerships – Coal Combustion Products Partnership (C^2P^2) http://www.epa.gov/osw/partnerships/c2p2/index.htm

can be retrofitted with additional filtering mechanisms to prevent the emissions of particulates on site. Equipment in use at remediation sites which use diesel fuels can include excavators, generators, dump trucks, and other earth-moving equipment.

In order to satisfy this requirement, specifications and bid packages will include a requirement for remediation contractors to either utilize clean diesel fuel or use retrofitted machinery on site to reduce emissions resulting from traditional diesel. These technologies may include addition of diesel particulate filters, manufacturer provided emissions upgrades, and/or use of alternative diesel-type fuels with lower concentrations of sulfur. A list of verified non-road engine technologies is available from USEPA[4] and includes specific manufacturers and types of reduction technologies. This information will be discussed with contractors and implemented to the greatest extent practicable.

Other Technologies

In addition to the discussed technology opportunities above, the Clean & Green Policy establishes a preference for use of:

- Energy conservation and efficiency approaches including EnergyStar equipment to reduce the amount of energy required during remedy implementation and site restoration;
- Water conservation and efficiency approaches including WaterSense products to reduce the amount of water used on site during remedy implementation and site restoration;
- Sustainable site design to minimize local environmental impacts of remedy implementation and to restore the site considering local environmental concerns after remedy is complete;
- Industrial material reuse or recycling within regulatory requirements of waste products on site which may be related to prior activities (i.e., historic concrete footings and foundations not otherwise impacted by on-site contamination) or waste streams generated from reclaimable impacted wastes (i.e., use of materials impacted with petroleum hydrocarbons as fuel stock for a generation plant);
- Recycling applications for materials generated at or removed from the site to avoid disposal of materials in landfills which can be reused or recycled;
- Transportation of construction materials, contaminated debris disposal, and routine supplies by rail lines;
- Environmentally Preferable Purchasing which, among other items, identifies purchasing of materials which are locally produced, contain recycled materials, and/or have minimal packaging; and
- Greenhouse gas emission reduction technologies which reduce or restrict the on-site generation of known greenhouse gases, such as carbon dioxide or methane.

These technologies will be specified in bid documents to contractors where appropriate and during creation of specifications for remedial action implementation. If one of these is impractical during planning or construction, this will be documented and provided as an appendix of the remedial action report.

In order to measure the cost differentials and environmental benefits associated with implementing the Clean & Green policy, tracking metrics may be required by USEPA. While there are no formal metrics or reporting requirements currently available from USEPA, these metrics may include quantities of materials reduced reused or recycled, carbon or greenhouse gas reductions, quantities of water conserved or replenished,

[4] Verified Nonroad Engine Technologies List http://epa.gov/oms/retrofit/nonroad-list.htm

distance and mode of transport from suppliers or to disposal facilities, quantity of electricity purchased and the generation mixture for the region of purchase, and quantity of energy used on site and its generation source. Documentation of this information will be required by contractors and tracked as part of the remedial action. It will be analyzed and submitted in the remedial action report.

APPENDIX D

Health and Safety Contingency Plan

Health and Safety Contingency Plan for Remedial Activities

MERCURY REFINING SUPERFUND SITE

COLONIE, NEW YORK

December 2009

BC Project Number: 137692.002.001

Prepared by:

BROWN AND CALDWELL

Associates

110 Commerce Drive

Allendale, New Jersey 07401

Prepared for:

Mercury Refining Company Remedial Design Group

Approval Page

This Health and Safety Plan (HSCP) has been prepared and reviewed by the following Brown and Caldwell (BC) personnel for use at: Mercury Refining Superfund Site (137692.002.001).

	Name	Signature	Title	Date
Prepared By:	Gabe Horn		Field Services Technician III	12/14/2009
Reviewed By:	James Marolda		Site Safety Officer	12/14/2009
Reviewed By:	Tamara Sorell	Tamara L. Sorell	Project Manager	12/14/2009
Reviewed By:	Lydia Crabtree, CSP	Lydia M. Crabtree	Regional Safety Unit Manager	12/14/2009
Effective Dates:	December 14, 2009	through	December 13, 2010	

TABLE OF CONTENTS

1. INTRODUCTION 1-1
1.1 Site History 1-2
1.2 Site Description 1-2
1.3 Scope of Work 1-3

2. KEY BC PROJECT PERSONNEL AND RESPONSIBILITES 2-1
2.1 Project Manager 2-1
2.2 Site Safety Officer 2-1
2.3 Regional Safety Unit Manager 2-2
2.4 BC Team Members 2-2
2.5 Subcontractors 2-3

3. HAZARD ANALYSIS 3-1
3.1 Chemical Hazards 3-1
3.2 Hazard Communication 3-3
3.3 Opening Wells and Well Vaults 3-3
3.4 Physical Hazards 3-4
3.4.1 Slip, Trips and Falls 3-4
3.4.2 Housekeeping 3-4
3.4.3 Heavy Equipment 3-5
3.4.4 Materials and Equipment Handling - Lifting 3-5
3.4.5 Excavations 3-6
3.4.6 Drilling 3-6
3.4.7 Noise 3-7
3.4.8 Underground Utilities 3-7
3.4.9 Overhead Utilities 3-7
3.4.10 Equipment Refueling 3-8
3.4.11 Electrical Hazards 3-8
3.4.12 Lockout/Tagout 3-9
3.4.13 Confined Spaces 3-10
3.4.14 Fire/Explosion 3-11
3.4.15 Sharp Objects/Cutting Utensils 3-11
3.4.16 Cutting Acetate Sample Sleeves 3-11
3.4.17 Elevated Platforms 3-12
3.4.18 Ladder Use 3-13
3.4.19 Traffic 3-13
3.4.20 Driving 3-14
3.4.21 Arc Flash Protection 3-14
3.4.22 Boating Safety 3-16

3.4.23 Building Collapse 3-17
3.4.24 Personal Safety - Urban Setting 3-18
3.5 Natural Phenomena 3-19
3.5.1 Sunburn 3-19
3.5.2 Heat Stress 3-19
3.5.3 Cold Stress 3-20
3.5.4 Lightning/Electrical Storms 3-20
3.5.5 Hurricanes 3-21
3.5.6 Tornados and Strong/Straight Line Winds 3-21
3.5.7 Earthquakes 3-22
3.6 Biological Hazards 3-23
3.6.1 Bloodborne Pathogens/Sanitary Waste 3-23
3.6.2 Rodents/Mammals 3-24
3.6.3 Reptiles/Snakes 3-24
3.6.4 Venomous Insects 3-25
3.6.5 Mosquitoes 3-25
3.6.6 Fire Ants 3-25
3.6.7 Spiders/Scorpions 3-26
3.6.8 Ticks 3-26
3.6.9 Poisonous Plants 3-26

4. PERSONAL PROTECTIVE EQUIPMENT 4-1
4.1 Conditions Requiring Level D Protection 4-1
4.2 Conditions Requiring Level C Protection 4-2
4.3 Stop Work Conditions 4-3

5. AIR MONITORING PLAN 5-1
5.1 Monitoring Instrument 5-1
5.2 Site Specific Action Levels 5-2

6. SITE CONTROL MEASURES 6-1

7. DECONTAMINATION PROCEDURES 7-1

8. TRAINING REQUIREMENTS 8-1

9. MEDICAL SURVEILLANCE REQUIREMENTS 9-1

10. CONTINGENCY PROCEDURES 10-1
10.1 Injury or Illness 10-1
10.2 Vehicle Collision or Property Damage 10-2
10.3 Fire 10-2
10.4 Underground Utilities 10-2
10.5 Site Evacuation 10-2
10.6 Spill of Hazardous Materials 10-2

10.7 Work Planning: First Responders 10-3
10.8 Emergency Response 10-3

11. DOCUMENTATION 11-1

LIST OF APPENDICES

Appendix A Air Monitoring Form
Appendix B Site Safety Checklist
Appendix C H&S Plan Acknowledgement Form
Appendix D Daily Tailgate Meeting Form
Appendix E Incident Investigation Form
Appendix F Miscellaneous Health and Safety Information

CRITICAL PROJECT INFORMATION

Primary Known Compound of Concern: Mercury, Arsenic, Manganese, Thallium

Minimum Level of Respiratory Protection: ☒ Level D ☐ Level C

PPE: Hard hat, safety glasses, steel-toed boots, Outer nitrile gloves (11 mil or thicker) and inner nitrile surgical gloves when direct contact with chemically affected soils or groundwater is anticipated (nitrile surgical gloves may be used for collecting or classifying samples as long as they are removed and disposed of immediately after each sampling event), Saranex suits as needed when there is the potential for skin contact.

SEE SECTION 10 FOR SITE EMERGENCY CONTINGENCY PROCEDURES
Do not endanger your own life. Survey the situation before taking any action.

BC Office Telephone	**201-574-4700**
Site Location Address	**110 Commerce Drive Allendale, New Jersey 07401**

EMERGENCY PHONE NUMBERS: In the event of emergency, contact the Project Manager and/or Regional Safety Unit Manager.

Emergency Services (Ambulance, Fire, Police)	**911**
Poison Control	**(800) 876-4766 or (800) 222-1222**
Hospital Name	**Albany Medical Center**
Hospital Phone Number	**(518) 262-3125**
BC Project Manager (PM; Tamara Sorell)	**Office: 201-574-4758 Cell: 973-519-5359**
BC Site Safety Officer (SSO; James Marolda)	**Office: SSO tel# Cell: 201-841-1625**
BC Regional Safety Unit Manager (Lydia Crabtree)	**Office: 615-250-1236 Cell: 615-202-1311**
Corporate Risk Management	**Property Loss Blythe Buetzow: (925) 210-2470 Injury Angela Hale: (925) 210-2218**
Subcontractor Contact (not applicable at this time)	**Office: not applicable Cell: not applicable**
Client Contact (Frank Williams)	**Office: 518-472-1988 Cell: 518-339-7454**

HOSPITAL LOCATION MAP

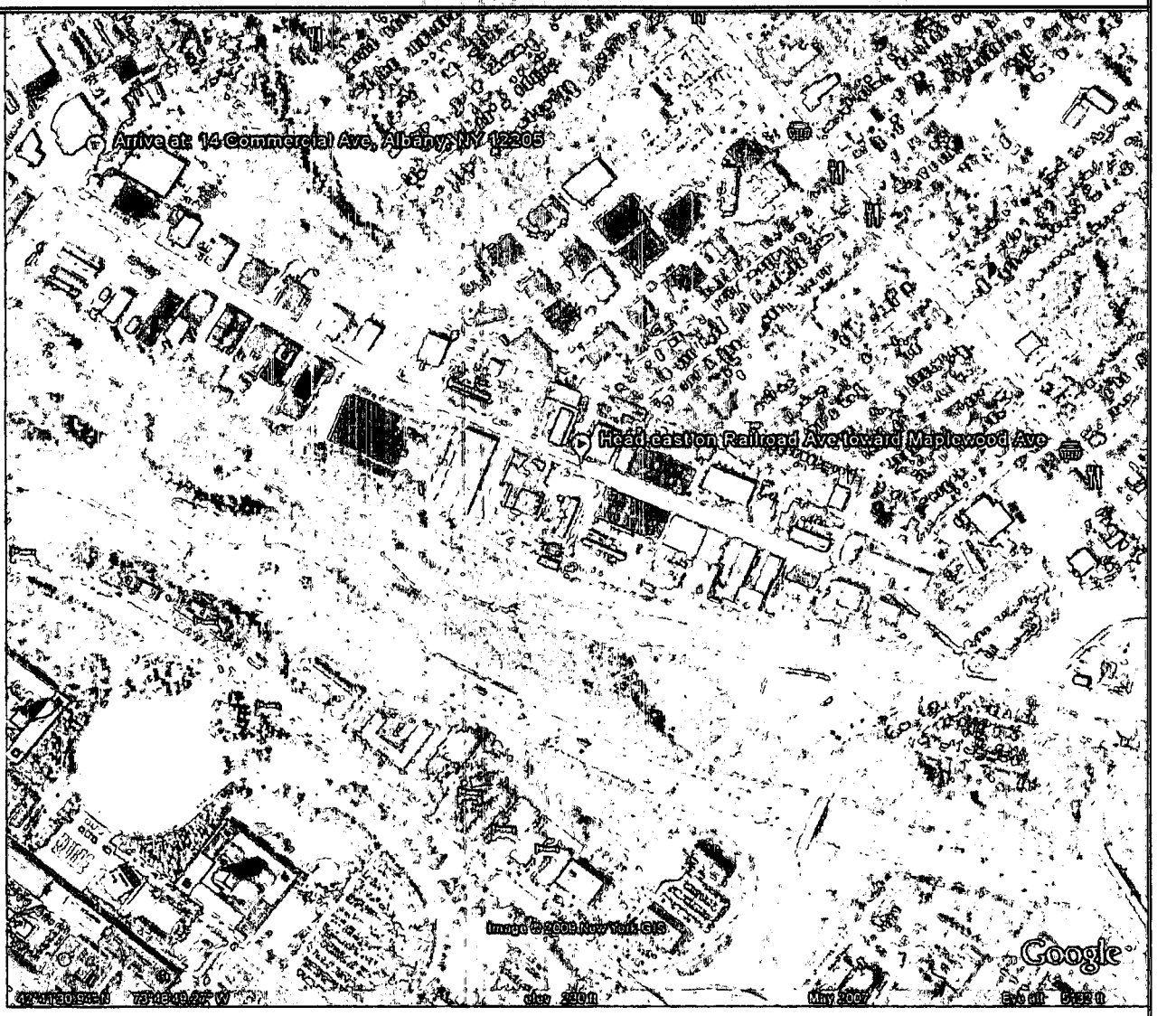

HOSPITAL DIRECTIONS:

1. Start out going EAST on RAILROAD AVE toward MAPLEWOOD AVE.
2. Make a U-TURN at MAPLEWOOD AVE onto RAILROAD AVE.
3. Turn RIGHT onto COMMERCIAL AVEN.
4. Hospital is on the left.

HOSPITAL INFORMATION:

Albany Medical Center
14 Commercial Avenue
Albany, New York

Phone: (518) 262-31250

EMERGENCY FIRST AID PROCEDURES

THE RESPONDER SHOULD HAVE APPROPRIATE TRAINING TO ADMINISTER FIRST AID OR CPR

1. Survey the situation. Do not endanger your own life. DO NOT ENTER A CONFINED SPACE TO RESCUE SOMEONE WHO HAS BEEN OVERCOME. ENSURE ALL PROTOCOLS ARE FOLLOWED INCLUDING THAT A STANDBY PERSON IS PRESENT. IF APPLICABLE, REVIEW MSDSs TO EVALUATE RESPONSE ACTIONS FOR CHEMICAL EXPOSURES.
2. Call 911 (if available) or the fire department **IMMEDIATELY**. Explain the physical injury, chemical exposure, fire, or release.
3. Decontaminate the victim if it can be done without delaying life-saving procedures or causing further injury to the victim.
4. If the victim's condition appears to be non-critical, but seems to be more severe than minor cuts, he/she should be transported to the nearest hospital by the SSO or designated personnel: let the doctor assume the responsibility for determining the severity and extent of the injury. If the condition is obviously serious, contact emergency medical services (EMS) for transport or appropriate actions.

Notify the PM and Regional Safety Unit Manager immediately and complete the appropriate incident investigation reports as soon as possible.

STOP BLEEDING AND CPR GUIDELINES	
To Stop Bleeding	**CPR**
1. Give medical statement by indicating you are trained in 1st Aid. 2. Assure: airway, breathing and circulation. 3. Use **DIRECT PRESSURE** over the wound with clean dressing or your hand (use non-permeable gloves). Direct pressure will control most bleeding. 4. Bleeding from an artery or several injury sites may require **DIRECT PRESSURE** on a **PRESSURE POINT**. Use pressure points for 30 -60 seconds to help control severe bleeding. 5. Continue primary care and seek medical aid as needed.	1. Give medical statement by indicating you are trained in CPR. 2. Arousal: Check for consciousness. 3. Call out for help, either call 911 yourself or instruct someone else to do so. It is very important to call for emergency assistance prior to initiating CPR. 4. Open airway with chin-lift. 5. Look, listen and feel for breathing. 6. If breathing is absent, give 2 slow, full rescue breaths. 7. Look, listen and feel for breathing. 8. If breathing is absent, initiate CPR; 30 compressions for each two breaths. 9. If an automated external defibrillator (AED) is available, use it in accordance with the AED instructions.

1. INTRODUCTION

Brown and Caldwell (BC) has prepared this Health and Safety Contingency Plan (HSCP) for use during the remedial activities to be conducted at Mercury Refining Superfund Site located at 26 Railroad Avenue, Colonie, New York ("the Site"). Activities conducted under BC's direction at the Site will be in compliance with applicable Occupational Safety and Health Administration (OSHA) regulations, particularly those in Title 29 of the Code of Federal Regulations, Part 1910.120 (29 CFR 1910.120), and other applicable federal, state, and local laws, regulations, and statutes. A copy of this HSCP will be kept on site during scheduled field activities.

This HSCP addresses the identified hazards associated with planned field activities at the Site. It presents the minimum health and safety requirements for establishing and maintaining a safe working environment during the course of work. In the event of conflicting requirements, the procedures or practices that provide the highest degree of personnel protection will be implemented. If scheduled activities change or if site conditions encountered during the course of the work are found to differ substantially from those anticipated, the Regional Safety Unit Manager and Project Manager will be informed immediately upon discovery, and appropriate changes will be made to this HSCP.

BC's health and safety programs and procedures, including medical monitoring, respiratory protection, injury and illness prevention, hazard communication, and personal protective equipment (PPE), are documented in the BC Health & Safety Manual. The Health & Safety Manual is readily accessible to BC employees via the BC Pipeline. These health and safety procedures are incorporated herein by reference, and BC employees will adhere to the procedures specified in the manual.

BC's HSCP has been prepared specifically for this project and is intended to address health and safety issues solely with respect to the activities of BC's own employees at the site. A copy of BC's HSCP may be provided to subcontractors in an effort to help them identify expected conditions at the site and general site hazards. The subcontractor shall remain responsible for identifying and evaluating hazards at the site as they pertain to their activities and for taking appropriate precautions. For example, BC's HSCP does not address specific hazards associated with tasks and equipment that are particular to the subcontractor's scope of work and site activities (e.g., operation of a drill rig, excavator, crane or other equipment). Subcontractors are not to rely on BC's HSCP to identify all hazards that may be present at the Site.

Subcontractors are responsible for developing, maintaining, and implementing their own health and safety programs, policies, procedures and equipment as necessary to protect their workers, and others, from their activities. Subcontractors shall operate equipment in accordance with their standard operating procedures as well as manufacturer's specifications. Any project monitoring activities conducted by BC at the Site shall not in any way relieve subcontractors of their critical obligation to monitor their operations and employees for the determination of exposure to hazards that may be present at the Site and to provide required guidance and protection. If requested,

subcontractors will provide BC with a copy of their own HSCP for this project or other health and safety program documents for review.

1.1 Site History

Mercury Refining Company Remedial Design Group has been identified by the USEPA as a Potentially Responsible Party (PRP) at the Mercury Refining Company, Inc. (MERECO) Property on the border of the Towns of Guilderland and Colonie, New York. The areas to the north, east, and west of the MERECO Property are principally light industrial with some commercial use and warehousing. Neighboring properties are Albany Pallet and Box Company (Albany Pallet) to the north, Allied Building Products Corporation (Allied Building) to the east, and Diamond W Products Incorporated (Diamond W) to the west. A CSX Railroad right-of-way is located south of the Property. A portion of an unnamed tributary to Patroon Creek (the Unnamed Tributary) is located immediately south of the MERECO Property; this tributary discharges into Patroon Creek approximately 1,600 feet downstream of the MERECO Property Another approximately 0.7 mile downstream, a dam in the Creek forms the I-90 Pond.

The MERECO parcel was used to reclaim mercury from mercury batteries and other mercury-bearing materials, such as thermometers, fluorescent bulbs, spill debris, and dental amalgams. The recovered mercury was then refined and marketed. The retorts were contained in the old Retort Building located just north of the Container Storage Building. MERECO also collected and brokered silver powders and small quantities of other precious metals. Before 1980, waste contaminated with mercury was dumped over an embankment of the Unnamed Tributary. From 1980 to 1998, waste batteries and other mercury-containing materials were stored in drums on wooden pallets within paved areas of the MERECO Property prior to disposal.

Various investigations at the site identified the presence of mercury at elevated levels in soils, groundwater, surface water and sediment, fish tissue, and soil vapor. In addition to mercury, the levels of the following analytes have also been detected above background levels: arsenic, thallium, manganese, methylmercury, and TOC.

The Site regulatory and remedial history is described in Section 2.1 of the main body of Remedial Design Work Plan (RDWP), to which this HSCP is an appendix.

1.2 Site Description

The Site includes the Mercury Refining Company, Inc. (MERECO) Property, which is located at 26 Railroad Avenue on the border of the Towns of Guilderland and Colonie, Albany County, New York (MERECO Property). This approximately 0.68-acre lot was used as a mercury reclamation facility. Figure 1 shows the MERECO Property location.

MERECO was founded in 1955. The facility used retorts (specialized ovens to distill and recover mercury) to reclaim mercury from mercury batteries and other mercury-bearing materials, such as thermometers, fluorescent bulbs, spill debris, and dental amalgams. The recovered mercury was then refined and marketed. The retorts were contained in the old Retort Building which was located just north of the Container Storage Building. MERECO also collected and brokered silver powders and small quantities of other precious metals. The precious metals operations continue today.

The areas to the immediate north, east, and west of the MERECO Property are principally light industrial with some commercial use and warehousing. The former Albany Pallet and Box Company (Albany Pallet) lies to the north of the Property, Allied Building Products Corporation (Allied Building) is located east of the Property and Diamond W Products Incorporated (Diamond W) is located west of the MERECO Property. A CSX Railroad right-of-way is located south of the Property. The closest residence is located approximately one quarter mile north of the Site.

The Site is defined by the extent of contamination associated with MERECO's past reclamation processes and includes the MERECO Property, the western portion of the Allied Building Property, the southern portion of Diamond W, the southern portion of the Albany Pallet Property, and a portion of an unnamed tributary to Patroon Creek (the Unnamed Tributary), which is located in the CSX right-of-way immediately south of the MERECO Property.

The Unnamed Tributary received contaminated stormwater drainage from the storm sewer system that formerly serviced the MERECO Property. The catch basins of the MERECO storm sewer have been plugged and present-day discharge is therefore expected to be minimal. The Unnamed Tributary currently receives drainage from a municipal storm sewer that extends south from Railroad Avenue through the Allied Building property, then west through the MERECO property to an outfall adjacent to the former outfall of the MERECO storm sewer. Approximately 1,600 feet downstream of the MERECO Property, the tributary converges with Patroon Creek. Approximately one mile downstream of the MERECO Property there is a dam in the Creek which forms the I-90 Pond. The Creek flows over the dam's spillway and enters the Hudson River approximately 5 miles from the stormwater outfall. The dam is owned and maintained by the City of Albany, New York.

The northeastern portion of the MERECO Property is currently covered by a concrete and asphalt cap which is a single-layer cap. The cap was installed to reduce the infiltration of rain water and to prevent direct contact with underlying soils which are contaminated with mercury. The southern portion of the MERECO Property is covered by a single-layer clay cap which was installed after the excavation and off-site disposal of mercury and polychlorinated biphenyl (PCB)-contaminated soils in 1985. The Property currently includes two buildings and is partially surrounded by a chain-link fence. One of the buildings, called the Phase 1 Building, houses the past and current operation of MERECO. The other building, called the Container Storage Building, has been used to store incoming material for processing in the Phase 1 Building. A commercial asphalt roadway and a wide business driveway provide access to the MERECO Property.

1.3 Scope of Work

The purpose of this Health and Safety Contingency Plan (HSCP) is to identify, evaluate, and control potential safety and health hazards and to provide emergency response procedures to incidents that may occur during field operations during the remedial design investigation (RDI) and the remedy implementation (RI) at the Mercury Refining , Superfund Site, 26 Railroad Avenue on the border of the Towns of Guilderland and Colonie, New York (EPA ID# NY00048148175). The activities may involve well drilling and installation, soil borings, surface water and sediment sampling, water level measurements, groundwater sampling, site survey/site reconnaissance, management of investigation-derived waste, excavation and in-situ soil stabilization. This HSCP covers only those Brown and

Caldwell personnel who are working at the site and who have potential for exposure to hazardous waste, hazardous substances, contaminated groundwater, or a combination of these materials.

This HSCP complies with the standards of the Occupational Safety and Health Administration (OSHA) as stated in 29 CFR with emphasis on subsections:

- 1910.120 (Hazardous Waste Operations and Emergency Response),
- 1910.1000 (Toxic and Hazardous Air Contaminants),
- 1910.1200 (Hazard Communication, Employee Right-to-Know Law),
- 1904 (Recording and Reporting Occupational Injuries and Illnesses),
- 1990 (Identification and Regulation of Potential Occupational Carcinogens),
- 1926 (Safety and Health Regulations for Construction); and other applicable federal and state statutes or regulations.

Amendments to this plan will be made as the contaminant profile information is updated, a change in work status or task is made, or as regulatory requirements dictate. Changes to this Plan will be brought to the attention of people covered under the Plan through additional training and appropriate notification as required.

2. KEY BC PROJECT PERSONNEL AND RESPONSIBILITES

Tamara Sorell is the Project Manager (PM). Lydia Crabtree is the Regional Safety Unit Manager (RSUM). James Marolda is has been designated as the BC Site Safety Officer (SSO) for this project. The BC project field staff have completed 40 hours of comprehensive health and safety training, which meets the requirements of 29 CFR 1910.120.

The responsibilities of key BC project personnel are presented below.

2.1 Project Manager

The PM is responsible for evaluating hazards anticipated at the Site and working with designated field staff and the RSUM to prepare this HSCP to address the identified hazards. The PM is also responsible for the following.

- Informing project participants of safety and health hazards identified at the Site.
- Providing a copy of this HSCP to BC project participants and a copy to each BC subcontractor prior to the start of field activities.
- Ensuring that the BC project team is adequately trained and perform safety briefings in accordance with this HSCP.
- Providing the resources necessary for maintaining a safe and healthy work environment for BC personnel.
- Communicating project safety concerns to the RSUM for determining corrective actions.

2.2 Site Safety Officer

The SSO has on-Site responsibility for verifying that BC team members, including subcontractors, comply with the provisions of this HSCP. The SSO has the authority to monitor and correct health and safety issues as noted on-Site. The SSO is responsible for the following.

- Reporting unforeseen or unsafe conditions or work practices at the Site to the PM or RSUM.
- Stopping operations that threaten the health and safety of BC field team or members of the surrounding community.
- Monitoring the safety performance of Site personnel to evaluate the effectiveness of health and safety procedures.
- Performing air monitoring, as necessary, as prescribed in this HSCP.
- Documenting field team compliance with this HSCP by completing the appropriate BC forms contained in the Appendices of this document.
- Conducting daily tailgate safety meetings and assuring that project personnel understand the requirements of this HSCP (as documented by each BC field team member's signature on the Signature Page).

- Limiting access to BC work areas on the Site to BC field team members and authorized personnel.
- Enforcing the "buddy system" as appropriate for Site activities.
- Performing periodic inspections to evaluate safety practices at the Site.
- Identifying the location and route to nearby medical facility and emergency contact information and coordinating appropriate responses in the event of emergency.

2.3 Regional Safety Unit Manager

The RSUM is responsible for final review and modification of this HSCP. Modifications to this HSCP that result in less protective measures than those specified may not be employed by the PM or SSO without the approval of the RSUM. In addition, the RSUM has the following responsibilities.

- Developing and coordinating the overall BC health and safety program.
- Advising the PM and SSO on matters relating to health and safety on this project.
- Recommending appropriate safeguards and procedures.
- Modifying this HSCP, if necessary, and approving changes in health and safety procedures at the Site.

2.4 BC Team Members

BC employees and subcontractors are responsible for familiarizing themselves with health and safety aspects of the project and for conducting their activities in a safe manner. This includes attending site briefings, communicating health and safety observations and concerns to the SSO, maintaining current medical and training status and maintaining and using proper tools, equipment and PPE. Proper work practices are part of ensuring a safe and healthful working environment. Safe work practices are essential and it is the responsibility of BC employees and team members to follow safe work practices when conducting scheduled activities. Safe work practices to be employed during the entire duration of fieldwork include, but are not limited to, the following.

- Following the provisions of this HSCP, company health and safety procedures and regulatory requirements.
- Reviewing safety-related information from other parties (i.e., client or contractors) as it relates to BC's activities.
- Inspecting personal protective equipment (PPE) before on-site use, using only intact protective clothing and related gear, and changing suits, gloves, etc. if they are damaged or beyond their useful service life.
- Set up, assemble, and check out all equipment and tools for integrity and proper function before starting work activities.
- Assisting in and evaluating the effectiveness of Site procedures (including decontamination) for personnel, protective equipment, sampling equipment and containers, and heavy equipment and vehicles.
- Practice the "buddy system" as appropriate for site activities.

- Do not use faulty or suspect equipment.
- Do not use hands to wipe sweat away from face. Use a clean towel or paper towels.
- Practice contamination avoidance whenever possible.
- Do not smoke, eat, drink, or apply cosmetics while in chemically-affected areas of the site or before proper decontamination.
- Wash hands, face and arms before taking rest and lunch breaks and before leaving the site and the end of the workday.
- Check in and out with the SSO upon arrival and departure from the site.
- Perform decontamination procedures as specified in this HSCP.
- Notify the SSO immediately if there is an incident that causes an injury, illness or property loss. Incidents that could have resulted in injury, illness or property loss (close call) will also be reported to the SSO.
- Do no approach or enter an area where a hazardous environment (i.e., oxygen deficiency, toxic or explosive) may exist without employing necessary engineering controls, proper PPE and appropriate support personnel.
- Use respirators correctly and as required for the Site; check the fit of the respirator with a negative or positive pressure test; do not wear respirator with facial hair or other conditions that prevent a face-to-facepiece seal.
- Confined spaces will not be entered without appropriate evaluation, equipment, training and support personnel.

2.5 Subcontractors

Subcontractor personnel are expected to comply fully with subcontractor's HSCP and to observe the minimum safety guidelines applicable to their activities which may be identified in the BC HSCP. Failure to do so may result in the removal of the subcontractor or any of the subcontractor's workers from the job site.

3. HAZARD ANALYSIS

Hazards at the Site may include physical hazards, chemical hazards or biological hazards. Each type of identified hazard is addressed in the following sections. Hazards that are the specialty of a subcontractor (i.e., operation of a drill rig or excavator) are not addressed in this HSCP. Subcontractors are responsible for identifying potential hazards associated with their activities and implementing proper controls.

3.1 Chemical Hazards

Exposure pathways of concern for chemical compounds that may be present at the Site are inhalation of airborne contaminants, direct skin contact with contaminated materials, and incidental ingestion of affected media. Wearing protective equipment and following decontamination procedures listed in Section 7 can minimize dermal contact and incidental ingestion. To minimize inhalation hazards, dust or vapor control measures will be implemented, where necessary, and action levels will be observed during scheduled activities. Site-specific action levels and air monitoring requirements are presented in Section 5.

Known or Suspected Compounds	Source (soil/water/sludge, etc.)	Known Concentration Range (ppm, mg/kg, mg/l)	
		Lowest	Highest
Mercury	Soil, groundwater, surface water, sediment, fish tissue, soil vapor	<10 ppm (soil)	497 ppm (soil)
Arsenic	Groundwater	ND	19.2 ppb
Manganese	Groundwater	ND	3470 ppb
Thallium	Groundwater	ND	37.2 ppb

Chemical descriptions of chemicals of concern, including health effects and exposure limits, are presented in the following paragraphs. Each chemical description includes physical and odor recognition characteristics, the health effects associated with exposure, and exposure limits expressed as an 8-hour time-weighted average (TWA). Provided are federal OSHA (OSHA) permissible exposure limits (PELs; located in 29 CFR 1910.1000); California OSHA (Cal/OSHA) PELs (located in 8 CCR 5155); and the American Conference of Governmental Industrial Hygienists (ACGIH) threshold limit values (TLVs). For sites outside California, Cal/OSHA PELs are included as an additional reference.

MERCURY

Mercury is a silver-colored, heavy, mobile liquid element. Mercury is a poison by inhalation, and is corrosive to skin, eyes, and mucous membranes. It may be absorbed into the body through the skin. Human systemic effects by inhalation include wakefulness, muscle weakness, anorexia, headache, diarrhea, liver changes, dermatitis, and fever. It is an

experimental teratogen with experimental reproductive effects and tumorigenic data. When heated to decomposition it emits toxic fumes of mercury.

- The OSHA PEL is listed as 0.1 mg/m3 as a Ceiling Value for elemental mercury, inorganic compounds and aryl compounds. The OSHA PEL is listed as 0.04 mg/m3 as a Ceiling Value for Alkyl compounds.
- The Cal/OSHA PEL is listed as 0.01 mg/m3 for mercury alkyls and aryl compounds, and 0.025 mg/m3 for metallic and inorganic compounds (as Hg).
- The TLV is listed as 0.01 mg/m3 for mercury alkyls, 0.1 mg/m3 for mercury aryl compounds, and 0.025 mg/m3 for inorganic forms including metallic mercury

Note: Published exposure limits designate a skin notation indicating that dermal contact can contribute to the overall exposure.

ARSENIC

Metallic arsenic is most commonly a gray, brittle, crystalline solid. It can also be in a black or yellow amorphous form. Arsenic is also commonly found in its volatile white trioxide form. Arsenic is used in several insecticides, herbicides, defoliants, desiccants, and rodenticides and appears in a variety of forms. It is also used in tanning, pigment production, glass manufacturing, wood preservation, and anti-fouling coatings. Arsenic is classified as a known carcinogen.

Short-term exposure to arsenic can cause marked irritation of the stomach and intestines with nausea, vomiting, and diarrhea. In severe cases the vomiting and stools are bloody and the exposed individual goes into collapse and shock with weak, rapid pulse, cold sweats, coma, and death. Inorganic arsenicals are more toxic than organic arsenicals, and the trivalent form is more toxic than the pentavalent form. Acute arsenic poisoning usually results from ingestion exposures. Blood cell changes, blood vessel damage, and impaired nerve function can also result from chronic arsenic ingestion. Other effects include skin changes, irritation of the throat, increased risk of cancer of the liver, bladder, kidney, and lung.

- The OSHA PEL is listed as 0.01 mg/m3 for inorganic forms of arsenic and 0.5 mg/m3 for organic forms.
- The Cal/OSHA PEL is listed as 0.01 mg/m3 for inorganic forms of arsenic and 0.2 mg/m3 for organic forms.
- The TLV is listed as 0.01 mg/m3 for arsenic and inorganic arsenic compounds.

MANGANESE

Manganese is a lustrous, brittle, silvery solid. Human systemic effects by ingestion and inhalation (the two routes of absorption) include, insomnia, mental confusion, metal fume fever (dry throat, cough, chest tightness, difficulty breathing, rales, flu-like fever; low-back

pain), vomiting, malaise (vague feeling of discomfort), lassitude (weakness, exhaustion), and kidney damage.

- The OSHA PEL is listed as 5 mg/m3 (as a ceiling limit).
- The Cal/OSH PEL is listed as 0.2 mg/m3.
- The TLV for elemental manganese is listed as 0.2 mg/m3.

THALLIUM

Thallium in solid form exists as thallium sulfate, thallium acetate, and thallium nitrate, all of which are colorless, odorless solids. Soluble thallium compounds are very toxic and cause cumulative intoxication. Many deaths have resulted from swallowing these compounds. Swallowing soluble thallium compounds can cause nausea, vomiting, diarrhea, abdominal pain, and bleeding from the gut. These symptoms are followed by drooping of the eyelids, crossed eyes, weakness, numbness, tingling of the arms and legs, trembling, and pain and tightness of the chest. Hair may fall out after two to three weeks. Severe intoxication may result in prostration, rapid heartbeat, convulsions, and psychosis. Recovery may be complete, but permanent effects such as staggering, visual difficulties, trembling, and mental abnormalities have been reported, and liver and kidney damage have occurred.

- The OSHA PEL is listed as 0.1 mg/m3 for soluble compounds.
- The Cal/OSHA PEL is listed as 0.1 mg/m3 for soluble compounds.
- The TLV is listed as 0.1 mg/m3 for elemental and soluble compounds.

Note: Published exposure limits designate a skin notation indicating that dermal contact can contribute to the overall exposure.

3.2 Hazard Communication

In accordance with the Hazard Communication standard, material safety data sheets (MSDSs) will be maintained on site for chemical products used by BC personnel at the Site (i.e., spray paint, PVC cement, etc.). Subcontractors will be responsible for maintaining MSDSs for chemical products they bring on Site. In addition, containers will be clearly labeled in English to indicate their contents and appropriate hazard warnings. Please note that labeling containers includes, but is not limited to, any waste, used PPE, and/or decontamination materials collected.

3.3 Opening Wells and Well Vaults

Direct-reading instrumentation specified in Section 5 will be used to monitor any work in a well vault at the site where VOCs are a concern. The well vault will be opened carefully with the BC employee staying upwind as much as possible and then left open for a minimum of three minutes to allow the vault to vent. If the well cap is then removed, allow another three minutes for the well head to vent before proceeding. Please note that if there are other established protocols that differ

from 3 minutes; the more protective time increment will be followed. Personnel should stay upwind as much as possible while working in and around the vault.

When removing a well cap, personnel will remain upwind as much as possible and will carefully remove the cap by opening it away from them in order to minimize the likelihood of exposure to vapors. Personnel will wait a minimum of three minutes to allow the well to vent before proceeding.

3.4 Physical Hazards

The following physical hazards, as marked below, have been identified and may be encountered during scheduled field activities.

- ☒ Slips, Trips and Falls
- ☒ Heavy Equipment
- ☐ Excavations
- ☒ Noise
- ☒ Overhead Utilities
- ☐ Electrical Equipment
- ☐ Confined Spaces
- ☒ Sharp Objects/Cutting
- ☐ Elevated Platforms
- ☒ Traffic
- ☐ Arc Flash Protection
- ☐ Building Collapse
- ☒ Housekeeping
- ☒ Materials and Equipment Handling - Lifting
- ☒ Drilling
- ☒ Underground Utilities
- ☐ Equipment Refueling
- ☐ Lockout/Tagout
- ☐ Fire
- ☐ Cutting Acetate Sleeves
- ☐ Ladder Use
- ☒ Driving
- ☐ Boating Safety
- ☐ Personal Safety – Urban Setting

Actions to be taken to protect against the hazards identified are provided in the sections below.

3.4.1 Slip, Trips and Falls

Slipping hazards may exist due to uneven terrain, wet or slick surfaces, leaks or spills. Tripping hazards may be present from elevation changes, debris, poor housekeeping or tools and equipment. Some specific hazards may include: climbing/descending ladders, scaffolding, berms or curbing. Collectively, these types of injuries account for nearly 50 percent of all occupational injuries and accepted disabling claims. Prevention requires attention and alertness on the part of each worker, following and enforcing proper procedures, including good housekeeping practices, and wearing appropriate protective equipment.

3.4.2 Housekeeping

Personnel shall maintain a clean and orderly work environment. Make sure that all materials stored in tiers are stacked, racked, blocked, interlocked, or secured to prevent sliding, falling, collapse, or overturning. Keep aisles and passageways clear and in good repair to provide for free and safe movement of employees and material-handling equipment. Do not allow materials to accumulate to a degree that it creates a safety or fire hazard.

During construction activities, scrap and form lumber with protruding nails and other items shall be kept clear from work areas, passageways, and stairs. Combustible scrap and debris shall be removed at regular intervals. Safe means must be provided to facilitate removal of debris.

Containers must be provided for collecting and separating waste, used rags and other debris. Containers used for garbage and other oily flammable or hazardous waste such as caustics, acids, harmless dusts, etc., must be separated and equipped with covers. Garbage and other waste shall be disposed of at frequent and regular intervals.

3.4.3 Heavy Equipment

Equipment, including earth-moving equipment, drill rigs, or other heavy machinery, will be operated in compliance with the manufacturer's instructions, specifications, and limitations, as well as any applicable regulations. The operator is responsible for inspecting the equipment prior to use each work shift to verify that it is functioning properly and safely.

The following precautions should be observed whenever heavy equipment is in use.

- PPE, including steel-toed boots, safety glasses, high visibility vests, and hard hats must be worn.
- Personnel must be aware of the location and operation of heavy equipment and take precautions to avoid getting in the way of its operation. Workers must never assume that the equipment operator sees them; eye contact and hand signals should be used to inform the operator of the worker's intent.
- Personnel should not walk directly in back of, or to the side of, heavy equipment without the operator's knowledge. Workers should avoid entering the swing radius of equipment and be aware of potential pinch points.
- Nonessential personnel will be kept out of the work area.

3.4.4 Materials and Equipment Handling - Lifting

The movement and handling of equipment and materials on the Site pose a risk to workers in the form of muscle strains and minor injuries. These injuries can be avoided by using safe handling practices, proper lifting techniques, and proper personal safety equipment such as steel-toed boots and sturdy work gloves. Where practical, mechanical devices will be utilized to assist in the movement of equipment and materials. Workers will not attempt to move heavy objects by themselves without using appropriate mechanical aids such as drum dollies or hydraulic lift gates.

Proper lifting techniques include the following.

- Lift with the strength of your knees, not your back.
- Firmly plant your feet approximately shoulder-width apart.
- Turn your whole body, don't bent or twist at the waist.
- Be sure that the path is clear of obstructions or tripping hazards; avoid carrying objects that will obstruct your vision.
- Use caution when holding an object from the bottom to prevent crushing of the hands or fingers when lowering.

3.4.5 Excavations

A competent person who is capable of identifying existing and predictable hazards in the surroundings, or working conditions that are unsanitary, hazardous, or dangerous to employees, and who has authorization to take prompt corrective measures to eliminate them, will be present during excavation activities.

The atmosphere will be tested in excavations, before employees are permitted to enter and begin work, greater than 4 feet in depth or where oxygen deficiency or toxic or flammable gases are likely to be present. The atmosphere shall be ventilated and re-tested until flammable gas concentrations less than 5 percent of the lower explosive limit (LEL) and site-specific action levels are obtained. Worker entry will not be allowed if the oxygen concentration is less than 20 percent. In addition, a safe means of access and egress (i.e., a ladder, stairs or ramp) must be provided so that no more than 25 feet of lateral travel is required by employees.

Workers will not enter unstable excavations or excavations greater than 5 feet in depth without appropriate protective systems such as benching, sloping, or shoring. If shoring or shielding systems are not used, side slopes will not be steeper than 1½:1 without written confirmation from the competent person that slope is safe for the soil conditions. Excavations will be constructed in accordance with the OSHA Excavation Safety Standard (29CFR1926 Subpart P).

The competent person will inspect excavations daily. If there is evidence that a cave-in or slide is possible, work will cease until the necessary safeguards have been taken. Excavated material will be placed far enough from the edge of the excavation (a minimum of 2 feet) so that it does not fall back into the opening or affect the integrity of the sidewall. At the end of each day's activities, open excavations will be clearly marked and secured to prevent nearby workers or unauthorized personnel from entering them. Remote sampling techniques will be the preferred method of sample collection in excavations.

3.4.6 Drilling

During all drilling activities, the operator must ensure that the appropriate level of protection and appropriate safety procedures are utilized. The operator will verify that equipment "kill switches" are functioning properly at the start of each day's use. Hard hats, steel-toed boots, and ear and eye protection will be required at all times when working around drill rigs. The proximity of underground and overhead utilities must be identified before any drilling is attempted. The rig may not be moved with the mast in the upright position.

Workers can effectively manage hazards associated with working around heavy equipment if a constant awareness of these hazards is maintained. These hazards include the risk of becoming physically entangled in rotating machinery, slipping and falling, impact injury to eyes, head and body, and injury from machinery operations. Never work or walk on piles of well casings. Make sure all high-pressure lines and hoses have whip checks attached. Constant visual or verbal contact with the equipment operator will facilitate such awareness. Additional caution is required around steam cleaners that are used to decontaminate heavy equipment. Non-operators shall remain a safe distance away from steam cleaning equipment.

3.4.7 Noise

Noise may result primarily from the operation of heavy equipment, process machinery or other mechanical equipment. Hearing protection with the appropriate noise reduction rating (NRR) shall be worn in areas with high noise levels. A good rule of thumb to determine if hearing protection is needed is the inability to have a conversation at arms length without raising voice levels. If loud noise is present or normal conversation becomes difficult, hearing protection in the form of ear plugs, or equivalent, will be required.

3.4.8 Underground Utilities

Reasonable efforts will be made to identify the location(s) of underground utilities (e.g., pipes, electrical conductors, fuel lines, and water and sewer lines) before intrusive soil work is performed. The state underground utility notification authority (e.g., USA, Dig Alert, Blue Stake, etc.) will be contacted prior to the start of intrusive field activities in accordance with local notification requirements. In areas not evaluated or serviced by the underground utility notification authority, and a reasonable potential for underground utilities exists, one or more of the following techniques will be employed to determine the location of subsurface structures.

- Contracting the services of a qualified private utility locator.
- Having a survey of the subject area conducted by staff trained in the use of subsurface utility locating equipment.
- Subsurface testing (i.e., hand digging or potholing) to the expected depth of probable utilities (not less than 5 feet).

If utilities cannot be located or if unlocated utilities are suspected to be present, subsurface activities (i.e., borings, excavation) should not be conducted before the location(s) or absence of underground utilities is confirmed.

Typical subsurface location marks are as follows:

- Red – electrical,
- Yellow – gas/oil/steam,
- Blue – water,
- Green – sanitary/storm drains/culverts,
- Orange – communications, and
- White – proposed excavation or boring.

Intrusive work should be limited to the area 3.3 feet (1 meter) on either side of the location marks. In some special cases such as fiber optics and high-pressure pipelines this area should be expanded to 16.5 feet (5 meters) on either side of the utility.

3.4.9 Overhead Utilities

If work is to be conducted in the vicinity of overhead electrical utilities, the owner of the overhead line will be contacted to determine the maximum voltage. Any overhead utility will be considered to

be energized unless and until the person owning or operating such line verifies that the line is not energized, and the line is visibly grounded at the work site.

Workers will not perform work in proximity to energized high-voltage lines (including scaffolding, well drilling, pile driving, or hoisting equipment) until danger from accidental contact with high-voltage lines has been effectively guarded against.

Equipment with articulated upright booms or masts are not permitted to operate within 15 feet of an overhead utility line (less than 50kV) while the boom is in the upright position. For transmission lines in excess of 50kV, an additional distance of 4 inches for each 10 kV over 50kV will be used.

3.4.10 Equipment Refueling

Care shall be exercised while refueling generators, pumps, vehicles, and other equipment to prevent fire and spills. Personnel shall eliminate static electricity by grounding themselves (touching metal) prior to using refueling hoses and or containers of petroleum liquids. Items being refueled shall be grounded or be located on the ground and not on a trailer, work bench or inside a truck bed. Equipment that is hot must be allowed to cool prior to refueling. Spill response materials shall be available when conducting refueling operations.

3.4.11 Electrical Hazards

Electrical equipment to be used during field activities will be suitably grounded and insulated. Ground-fault circuit interrupters (GFCI), or equivalent, will be used with electrical equipment to reduce the potential for serious electrical shock. Electrical equipment including batteries, generators, panels and extension cords shall be kept dry during use. Extension cords may not be used as a permanent means of providing power and will be removed from service if they are worn, frayed, or if the grounding prong is missing.

Extension cord precautions include the following.

- Be aware of exposed or bare wires, especially on metal grating. Warning: *Electrical contact with metal can cause fatal electrocution.*
- Prior to use, inspect cords for exposed or bare wires, worn or frayed cords, and incorrect splices. Splices are permitted, but there must be insulation equal to the cable, including flexibility.
- Cables and extension cords in passageways, steps or any area where there may be foot traffic should be secured so as to not create a tripping hazard. Overhead cables and extension cords shall be rigged to a height greater than 6 feet.
- Shield extension cords that must run across driveways or areas where vehicle traffic is present.
- Do not run cords across doorways or windows where they can be frayed or cut by a closed door or window.
- Do not run wires through wet or puddled areas.
- Flexible cord sets that are used on construction sites or in damp locations shall be of hard usage or extra hard usage type.

Observation of energized machinery will take place from a safe distance. Only qualified personnel will remove guards, hatch covers, or other security devices if necessary. Equipment lockout procedures and an appropriate facility work permit requirements will be followed. Lockout/tagout procedures will be conducted before activities begin on or near energized or mechanical equipment that may pose a hazard to site personnel. Workers conducting the operation will positively isolate the piece of equipment, lock/tag the energy source, and verify effectiveness of the isolation. Only employees who perform the lockout/tagout procedure may remove their own tags/locks. Employees shall complete lockout/tagout training before initiating this procedure.

Only qualified personnel will remove covers of electrical equipment to expose energized electrical parts. Entering electrical rooms/vaults or areas with live exposed electrical part by BC employees shall be permitted only when accompanied by a qualified personnel after notification and approval of the appropriate facility personnel.

3.4.12 Lockout/Tagout

Lockout/tagout (LO/TO) procedures in accordance with 29 CFR 1910.147 will be performed before activities begin on or near energized or mechanical equipment that may pose a hazard to site personnel. The purpose of the lockout/tagout (LO/TO) system is to safeguard exposure from machinery, energized electrical circuits, piping under pressure, or any type of energy source from unexpected energization or start up that could at cause harm to an individual. Workers conducting the operation will positively isolate the piece of equipment, lock/tag the energy source, and verify effectiveness of the isolation. Only employees who perform the lockout/tagout procedure may remove their own tags/locks. Employees must be thoroughly trained before initiating this procedure.

Whenever multiple personnel (or multiple employers are working on the same worksite) are to be engaged in activities requiring LO/TO, employees/employers shall inform each other of their activities and coordinate their respective LO/TO procedures. Whenever a group lockout/tagout procedure must be performed, they shall utilize a procedure that affords the same level of protection as that provided by the implementation of a personal lockout or tagout device. Group LO/TO devices shall meet the requirements of 29 CFR 1910.145(f)(3).

<u>Basic Lockout/Tagout Procedures</u>

1. Each person will maintain their own lock, key, and lockout device so that no one else can remove the lock.
2. Always notify the operator when work is to be done.
3. Use your own lock to lock out electrical power. Attach a tag or sign to the power disconnect to indicate that maintenance work is in progress. Use the wording "Do Not Operate."
4. Bleed all pressure from pneumatic, hydraulic, or other fluid lines, or safely isolate them from the area where work is being done.
5. Drain contents of lines or tanks as needed. Lock valves open or closed to prevent buildup of pressure.
6. Ground electrical systems as needed.

7. Secure any device under tension or compression so as to prevent accidental movement. Move suspended parts that could drop or cycle to a safe position and block, clamp, or chain them in place.
8. Verify (test) that the mechanism had been isolated from the source of energy.
9. Ensure that all workers remove their individual locks after work is completed. The last worker should remove the locking devices.
10. Ensure that the last person double-checks that all is clear and safe before start-up.

Portable Equipment

Portable electrical equipment such as hand drills, computers, and power saws that use plug type connectors must be unplugged prior to any task that may expose the employee to energized portions of the equipment. Removal of the plug from the power source, such as the generator or wall socket, may be combined with a tagout system, particularly if the plug is at a distance from the equipment being repaired.

3.4.13 Confined Spaces

Entry into confined spaces will be conducted in strict accordance with 29 CFR 1910.146. Confined spaces will be evaluated prior to entry to determine if hazards are present that could pose a risk to entrants. Before workers may enter a permit-required confined space, a pre-entry checklist and entry permit must be completed by the PM or SSO, approved by the RSUM and, all requirements for entry must be met.

Confined spaces may be described as having, but not being limited to, the following characteristics:

- is large enough to permit an employee to enter and perform work; and
- has limited or restricted means of entry and exit; and
- is not equipped, designed, or intended for continuous human occupancy.

If there is any serious health and safety hazard present in the confined space is considered a permit-required confined space (permit space). A permit-space is a confined space that has one or more of the following characteristics:

- contains or has the potential to contain a hazardous atmosphere; or
- contains or has the potential to contain a material with the potential to engulf or entrap an employee; or
- is so configured that an employee may become trapped, disoriented, or asphyxiated by wall configurations or floors that taper to smaller cross sections; or
- contains any other established safety or health hazard (examples may include sources of energy, moving parts or thermal considerations).

All fluid, electrical, and steam lines and other sources of energy that could harm entrants must be completely isolated before entry. The following atmospheric conditions must be met before entry is permissible (air monitoring may be necessary to verify these conditions are met):

- flammable vapor or dust must be at a concentration less than 5 percent of the lower explosive limit (LEL); and

- oxygen must be at a concentration greater than 20 percent and less than 22 percent; and
- hydrogen sulfide concentration must be less than 5 parts per million (ppm); and
- toxic substances must be at a concentration less than their respective permissible exposure limits or specified action limits.

In addition, the following roles must be designated before entry into permit-required confined spaces is allowed: Entry Supervisor; Attendant; and Authorized Entrant(s). Confined space entry for each project also requires training for the project team on written operating procedures, including the use of the Confined Space Pre-Entry Checklist and Confined Space Entry Permit forms.

BC employees are ***not*** trained in rescue services. Such services are to be arranged locally, prior to entry operations, by the PM. Rescue services can typically be provided by the local fire department or contracted service provider.

3.4.14 Fire/Explosion

Site workers should have an increased awareness concerning fire and explosion hazards whenever working with or near flammable materials, especially when performing any activity that may generate sparks, flame, or other source of ignition. Intrinsically safe equipment is required when working in or near environments with the potential for an explosive or flammable atmosphere. The SSO will verify facility requirements for a "hot work" permit before activities that may serve as a source of ignition are conducted.

Flammable materials will be kept away from sources of ignition. In the event of fire, work will cease, the area will be evacuated, and the local fire response team will be notified immediately. Only trained, experienced fire fighters should attempt to extinguish substantial fires at the Site. Site personnel should not attempt to fight fires, unless properly trained and equipped to do so. A fully charged ABC dry chemical fire extinguisher will be readily available for use during all scheduled activities at the Site.

3.4.15 Sharp Objects/Cutting Utensils

Frequently field tasks require the cutting of items such as rope, packaging or containers. Care should be exercised in using knives and/or cutting implements while performing such cutting tasks. Personnel should cut down and away from their body and other personnel. The item being cut should be braced or secured from movement while cutting. When slicing open acetate liners, such as those utilized in direct push drilling, personnel should use a hook blade cutting implement designed for this task versus a straight blade knife.

3.4.16 Cutting Acetate Sample Sleeves

The cutting of acetate sleeves presents a potential hazard to sampling personnel. By following proper procedures, the risk associated with this activity can be effectively minimized. To remove the soil sample the acetate liner must be cut with a bladed tool or knife. Knives are more frequently the source of disabling injuries than any other hand tool. The principal hazard in the use of knives is

the hand slipping from the handle onto the blade or the blade strikes another part of the body. To prevent this, the following safety procedures should be followed.

- Provide a safety blade holder with a retraction spring on a track where blade mounts. Use a hook type linoleum blade which has a reduced cutting edge. When the hook of the blade is cutting the acetate liner it keeps the blade extended. If the blade breaks or the operator's hand slips the blade automatically retractions into the handle of the safety blade holder.
- Replace blades when they become dull. If material becomes hard to cut the blade is dull.
- Wear leather cut-resistant (such as Kevlar) gloves.
- Wear safety glasses.
- The cutting stroke should be away from the body. If that is not possible, then the hands and body should be in the clear.
- Provide an angle iron device to place the liner in when cutting. This gives a holder for the liner.
- If you drop the knife just let it fall to the ground and DO NOT try to catch it.
- If you lay the knife down make sure the blade is retracted into the holder or the knife is placed in a protective holder.

3.4.17 Elevated Platforms

When working at heights that expose employees to falls greater than 6 feet, especially on sloping roofs and elevated platforms, the requirements of 29 CFR 1926.502 shall be observed. In such instances, a safety harness shall be worn and the lanyard secured at a level not lower than the employee's waist, limiting the free-fall distance to a maximum of 6 feet.

Elevated work platforms shall be constructed, used, and maintained in accordance with Subpart L of the OSHA Construction Safety Orders. Scaffolds and hoisting lines shall be inspected daily by a competent person to verify the integrity of the components. If a material is determined to be defective, it may not be used for any purpose and will be replaced immediately.

A standard railing shall consist of top rail, intermediate rail, toe board, and post. It shall have a vertical height of approximately 42 inches (±3 inches) from the top surface of the top rail to the floor, platform, runway, or ramp. The top rail shall have a smooth surface throughout. The intermediate rail shall be set half way between the top rail and the floor, platform, runway, or ramp.

A cover of standard strength and construction that is secured against accidental displacement shall guard floor holes, hatchways, or any other openings into which a person can walk. When the cover is not in place, the openings shall be guarded with a standard railing (equipped with a toe board) on all exposed sides. Any cover on floor openings shall be properly labeled or stenciled with letters at least one inch high or greater stating "OPENING – DO NOT REMOVE".

Personal Fall Protection Equipment

Full body harness is the only acceptable means of fall arrest for personnel working over surfaces greater than six feet in height. A Fall Arrest System consisting of safety harness and anchor lanyard must be worn by anyone working on elevated surfaces that lack "general" fall protection such as railings, etc.

Lanyards must be tied off at a point above the worker's head and to a firm structure or a portion thereof designed to hold a weight of 5,000 lbs. Only hooks with locking snaps that operate in "as new" condition will be used. These hooks are also referred to as "double action lanyard hooks".

When other possible means of fall protection (railings, etc.) are not available, individuals working at heights of less than 6 feet must tie-off if there is danger of impalement, especially if the impalement hazard cannot be mitigated in accordance with OSHA standards.

All workers must perform routine inspection of belts/harnesses and lanyards prior to their use. The employer shall conduct regular inspections (every three months) of all fall protection equipment. In addition, there shall be an inspection of all workers' personal tools and equipment prior to the employees using them on the job.

Lanyards are to be used for tie-off purposes only, and damaged belts, harnesses, and lanyards must be retired and discarded.

3.4.18 Ladder Use

Ladders are to be maintained in good condition at all times, with tight joints, hardware, and fittings securely attached, and moveable parts freely operating without binding or undo play. Defective ladders must be "tagged" out of service. Safety "feet" shall be kept in good condition. Ladders are to be visually inspected for possible signs of damage or defects daily, before each use.

Where possible, portable straight rung ladders shall be set up so that the horizontal distance from the top support to the foot of the ladder is ¼ of the working length of the ladder. The ladder shall be secured by tying it off to a firm point, or held in place by another worker while in use. If the ladder is used to gain access to a roof or platform, the side rails shall extend at least 3 feet beyond the point of support at the edge of the roof or platform.

Step ladders shall always be set up properly, so that they are in the "A" frame position, level and with all four feet on firm ground, and fully opened with the spreaders locked in place. Personnel are forbidden to stand on the top cap or on the last step of a step ladder, or to stand on the hinged back of a step ladder. A step ladder shall never be used at a straight ladder.

3.4.19 Traffic

Vehicular traffic presents opportunities for serious injury to persons or property. Traffic may consist of street traffic or motor vehicles operated by facility employees or visitors to the Site. Workers and other pedestrians are clearly at risk during periods of heavy traffic. Risk from motor vehicle operations may be minimized by good operating practices and alertness, and care on the part of workers and pedestrians.

Site personnel will wear high-visibility traffic safety vests whenever activities are conducted in areas of heavy traffic. Work vehicles will be arranged to be used as a barrier between site workers and nearby traffic. If required by local ordinances or site location, a traffic control plan will be developed implemented.

It is important to be conscious of all vehicular traffic that may be present during conduct of field operations. Use caution tape, barricades, or safety cones to denote the boundaries of the work area

and to alert vehicle operators to the presence of operations which are non-routine to them. Be careful when exiting the work area and especially when walking out from between parked vehicles to avoid vehicular traffic.

Never turn your Back on Traffic. When working in or near a roadway, walk and work with your face to the oncoming traffic. If you must turn your back to traffic, have a coworker watch oncoming traffic for you.

Vehicle and Worksite Position. Whenever possible, place a vehicle between your worksite and oncoming traffic. Not only is the vehicle a large, visible warning sign, but if an oncoming car should fail to yield or deviate, the parked vehicle, rather than your body, would absorb the first impact of a crash. Turn the wheels so that if the vehicle were struck, it would swing away from the worksite. Even though the vehicle would protect you in a crash, it might be knocked several feet backward. Always leave some room between the rear of the vehicle and the work area.

Use of Signs and Cones to Direct Traffic. Traffic signs and cones are used to inform drivers and direct traffic away from and around you. Cones and signs are only effective if they give oncoming drivers enough time to react and make it clear how traffic should react.

Cone Positioning. The most common coning situation is setting a taper of cones that creates a visual barrier for oncoming motorists and gradually closes a lane.

The position of the taper depends on the road width, position and size of the work area, and also on the characteristics of the traffic.

3.4.20 Driving

A lot of driving is required to get to, from, and between project Sites. Safe vehicle maintenance and operation must be a priority. It requires knowledge of directions to (and conditions of) the Site in advance, careful exiting and merging into traffic, anticipating the unexpected, remaining alert to one's physical and mental condition, resisting distractions such as cell phone use, other car activities and contacting assistance when needed. Report all vehicle accidents/incidents to BC's Risk Manager.

3.4.21 Arc Flash Protection

An arc flash is a short circuit through the air when insulation or isolation between electrified conductors is breached or can no longer withstand the applied voltage, an arc flash occurs. Statistics show that there are 5 to 10 arc flash explosions a day near electrical equipment that result in hospitalization of a burn victim. An arc flash can be caused by common occurrences such as dropping tools, accidental contact with electrical systems, and build up of dirt or corrosion.

The temperature of an arc can reach more than 35,000 F as it creates a brilliant flash of light and a loud noise. Concentrated energy explodes outward from the electrical equipment, spreading hot gases, melting metal, causing death or severe burns, and creating pressure waves that can damage hearing or brain function and a flash that can damage eyesight. The fast-moving pressure wave also can send loose material such as pieces of equipment, metal tools, and other objects flying, injuring anyone standing nearby.

Regulations require the calculation of the "flash protection boundary" inside which qualified workers must be protected when working. This boundary is an imaginary sphere surrounding the potential arc point, "within which a person could receive a second-degree burn if an electrical arc flash were to occur," according to the National Fire Protection Association (NFPA) 70E standard. Brown and Caldwell's Health and Safety Manual gives direction of when and where to establish this boundary.

BC's Electrical Safety/Arc Flash Policy provides information and instruction for BC employees who work on or near energized power circuits, electrical distribution equipment, electrical utilization equipment and those who inspect energized equipment, where a phase-to-ground or phase-to-phase short or fault occurrence may cause an Arc Flash event.

BC employees shall comply with BC Health and Safety Requirements Manual # 207 – Lockout/Tagout and treat electrical equipment and circuits as energized until:

1. Lock-Out / Tag-Out protection is in place and the equipment or circuit has been tested to verify "no voltage" present, by a trained and qualified electrical worker, or
2. The equipment or circuit has been physically isolated from every power source, tested, and clearly labeled.

For those BC employees involved with **energized electrical work** (i.e. design verification, equipment check-out, or start-up adjustments), the following ordered approach shall be used:

1. BC employees shall seek to have a trained and qualified electrical worker perform all energized electrical hands-on work (i.e. switching, metering, testing, etc.) while BC employees remain outside the flash protection boundary.
2. BC employees that closely supervise work within the flash protection boundary shall first receive approval from the Project Manager and Site Safety Officer (SSO).
3. Prior to performing this work, the Project Manager (PM) shall ensure that a Field Work Safety Plan (FWSP) is prepared and approved by the PM, the employee's manager, the SSO, and cognizant Health and Safety Manager.
4. Only "qualified BC employees" shall enter the flash protection boundary wearing the proper Personal Protective Equipment (PPE) and only for Hazard/Risk Categories 0-2 – see the 'Warning' section below. BC personnel shall acquire the proper PPE from the SSO and/or RSUM.

WARNING

Qualified BC personnel are limited to work in Hazard/Risk Categories 0-2, and therefore only require PPE meeting the requirements of Hazard/Risk Categories 0-2.

Only qualified electricians shall conduct work categorized as a Hazard/Risk Category of 3 or 4.

Qualified BC personnel are NOT to cross a flash protection boundary which involves a Hazard/Risk Category 3 or 4 situation.

BC employees and management shall review the **Health and Safety Manual #513 – Arc Flash** for detailed requirements.

Questions concerning this policy should be directed to the BC Office Electrical Engineering Manager and to the RSUM.

Definitions

Energized Electrical Work. Work performed on or near energized electrical systems or equipment with exposed components operating at 50volts or greater. Electrical system testing, thought to be de-energized, but not yet proven to be (for example, a LO/TO effectiveness check).

Flash Protection Boundary. The distance from energized exposed electrical equipment at which an unprotected person will receive a curable burn: 2nd degree burn or blistering. Work performed inside this boundary requires that the person be a "qualified person" and the use of Personal Protective Equipment (PPE) to protect against arc flash burns.

Newly installed/serviced electrical equipment may contain an Arc Flash Label that will identify the energy, hazard category and PPE requirements associated with the equipment. For all other unlabeled equipment, where the specific flash protection boundary (energy, hazard category, and applicable PPE) is not established or cannot be established first (prior to live electrical exposure), BC personnel shall maintain a 4-foot minimum observation distance (BC prefers 10 feet) from the exposed (i.e. doors open, covers off) live electrical equipment. In the event that the 4-foot minimum distance must be crossed, BC personnel shall don PPE appropriate for Hazard/Risk Category 2.

Qualified BC Employee. A person with the training and experience having knowledge of energized electrical equipment hazards from an operational standpoint and from the safety training standpoint.

Educational credentials alone do not make a person qualified. Determination of qualification shall be established by the employee's supervisor or other designated knowledgeable management representative.

3.4.22 Boating Safety

Boating or similar activities on aerated water treatment ponds and/or tanks by BC personnel is not permitted. The aeration process affects the buoyancy of the liquid and therefore boats can not consistently stay afloat.

Performing work activities from a boat can present unique hazards to employees. The following guidelines can help mitigate the risk. The boat can become unstable if the weight in it is excessive or loaded improperly. Too much weight will reduce maneuverability and freeboard (the height of the boat sides above the water) and can increase the risk of sinking.

When boarding the boat, the operator must be sure that the boat is secure. With one hand on the boat, each employee should quickly lower themselves straight down into the center of the boat. A United States Coast Guard (USCG) certified personal floatation device will be worn by each BC employee in the boat. In addition, other USCG-required items (i.e., throwable cushion, retrieval line, etc.) will be present on the boat. To move around in a boat, one should step along the fore-and-aft centerline of the boat while the boat is held in place along the pier.

Do not board the boat while carrying equipment, rather first board the craft and then have someone hand in the equipment or place the equipment in the boat prior to launch The amount and location

of weight is critical and can reduce the risk of capsizing. Weight should be kept towards the middle or centerline of the boat, both fore-and-aft and side-to-side, also the weight should be kept low to the bottom of the boat to reduce the center of gravity.

It is not anticipated that waves of substantial size will be encountered, however, if a wave approaches the boat, steer the bow towards the oncoming wave. Overloading the boat increases draw and the potential for swamping. Watercraft must be operated within the boat manufacturers weight limits.

Should the boat capsize, Brown and Caldwell personnel shall abandon the boat and return to shore as quickly as possible. It is important that the employees attempt to remove themselves from the water as soon as possible, and get inside and call for help. Hypothermia (cold stress) is a significant risk for anyone involved in a boating accident due to the rapid conduction of body heat by cold water. Wet or dry suits are recommended for cold weather/cold water (less than 45° F) operations.

3.4.23 Building Collapse

Buildings collapse for a variety of reasons. Natural phenomena such as earthquakes, hurricanes, floods, mudslides, avalanches, and storms are the usual cause for building collapses. Vacant buildings may be at risk for collapse since maintenance-related activities have been often neglected thus resulting in structural damage.

Project personnel should attempt to answer the following questions whenever working near suspect building structures.

- Are there any vacant buildings present on site?
- Will it be necessary to enter or work next to the vacant building(s)?
- Are there any apparent hazards including external damage, falling objects, sticky doors, structural instability, or possible asbestos and/or lead paint?
    - External damage may include, but not necessarily be limited to, foundation cracks, damaged or missing porch roofs and overhangs supports, gaps between steps and the structure, missing supports or portions of walls, and "washed away" ground.
    - Falling objects may include, but not necessarily be limited to, building cornices, gutters, bricks, and roofs/roofing materials.
- Be aware that when entering a building, if the door sticks at the top it could mean the ceiling is ready to fall. If you force the door open, stand outside the doorway clear of falling debris.
- Has the building(s) been inspected by a qualified professional and deemed safe for entry?
- Are there any viable alternatives for conducting work that preclude the need to enter or work next to the suspect building(s)?

If you have any concerns about entering the building after answering the above questions, speak with the PM immediately. The client will need to be informed that a proper building inspection or engineering controls may be needed before work can be performed.

If you don't feel safe entering a building, then notify the PM and RSUM and stay outside the building at an appropriate distance to avoid falling debris.

3.4.24 Personal Safety - Urban Setting

Working in a distressed neighborhood may present hazards associated with street violence or other crime. In these situations, mental preparation before going to the Site and awareness while on Site are of key importance. If in doubt, always ask Site or client personnel about the safety of a neighborhood. Forethought should be given to arranging to work during daylight hours if possible. Take advantage of any Site security measures (monitoring cameras, security guards) and investigate such measures prior to the field work. Once in the field, work in parties of two or more and stay within view of the general public. Keep a charged cell phone nearby or on your person at all times. Become familiar with your location so you can effectively communicate it over the phone.

In addition to these basic principals, the following is a list of common personal safety rules that apply not only to work at the Site, but to general safety practices while in the field and also between work shifts.

- If at all possible, work/travel in groups. Do not venture out alone.
- Be alert. Notice who passes you and who's behind you. Maintain distance between yourself and strangers. Know where you are, and note potential exit paths.
- If work has paused do not appear slack or distracted. Do not sit in a vehicle with the doors unlocked.
- Walk in well-lighted areas. Don't walk close to bushes, alleys, and so on. In dark or deserted neighborhoods, walk down the middle of the street (be alert to vehicle traffic).
- If a car pulls up slowly, or the occupants of the vehicle bother you, cross the street and walk or run in the other direction. If you are pursued, dial 911.
- If you feel someone is following you, turn around and check. Proceed to the nearest lighted house or place of business.
- Don't overburden yourself with bags or packages, which might impede running or taking care of yourself.
- Be aware of loose clothing, packs/purses and hair. These give an assailant an easier method of grabbing and controlling you. Wear unrestrictive clothing for ease of movement (but not overly loose).
- Carry a non-weapon personal safety device (such as a whistle, panic button, or key light) - anything that could visually or audibly draw attention to your location.
- What you carry in your hand(s) is important. Valuables make you a potential target. Items such as a hand auger or tool may help you be perceived as a less-than-inviting victim.
- Carry as little cash as possible.
- Hold your purse tightly, close to your body. Keep your wallet in a front or in a buttoned, hip pocket. When at a fixed location, lock your valuable items away and out of site (i.e., in a trunk).
- Be careful when people stop you for directions or information. Always reply from a distance; never get too close to a stranger' car.
- If you feel that you are in danger, don't be afraid to scream and run.
    - Toss wallet/keys away from direction of escape.

- Don't attach car keys to house keys.
- Leave large valuables (purse, laptop) locked and hidden in the vehicle.

3.5 Natural Phenomena

Natural phenomena such as weather-related emergencies and acts of nature can affect employees' safety. Natural phenomena can occur with little or no warning. If an emergency situation arises as a result of natural phenomena, adhere to the contingency procedures outlined in Section 10. The following natural phenomena have been identified and may be encountered during scheduled field activities.

- ☒ Sunburn
- ☒ Heat Stress
- ☒ Cold Stress
- ☒ Lightening/Electrical Storms
- ☐ Hurricanes
- ☐ Tornados and Strong/Straight Line Winds
- ☐ Earthquakes

3.5.1 Sunburn

Working outdoors with the skin unprotected for extended periods of time can cause sunburn to the skin. Excessive exposure to sunlight is associated with the development of skin cancer. Field staff should take precautions to prevent sunburn by using sunscreen lotion and/or wearing hats and long-sleeved garments.

3.5.2 Heat Stress

Adverse climate conditions, primarily heat, are important considerations in planning and conducting site operations. Heat-related illnesses range from heat fatigue to heat stroke, with heat stroke being the most serious condition. The effects of ambient temperature can cause physical discomfort, loss of efficiency, and personal injury, and can increase the probability of accidents. In particular, protective clothing that decreases the body's ventilation can be an important factor leading to heat-related illnesses.

To reduce the possibility of heat-related illness, workers should drink plenty of fluids and establish a work schedule that will provide sufficient rest periods for cooling down. Personnel shall maintain an adequate supply of non-caffeinated drinking fluids on site for personal hydration. Workers should be aware of signs and symptoms of heat-related illnesses, as well as first aid for these conditions. These are summarized in the table below.

Condition	Signs	Symptoms	Response
Heat Rash or Prickly Heat	Red rash on skin.	Intense itching and inflammation.	Increase fluid intake and observe affected worker.
Heat Cramps	Heavy sweating, lack of muscle coordination.	Muscle spasms, and pain in hands, feet, or abdomen.	Increase fluid uptake and rest periods. Closely observe affected worker for more serious symptoms.

Condition	Signs	Symptoms	Response
Heat Exhaustion	Heavy sweating; pale, cool, moist skin; lack of coordination; fainting.	Weakness, headache, dizziness, nausea.	Remove worker to a cool, shady area. Administer fluids and allow worker to rest until fully recovered. Increase rest periods and closely observe worker for additional signs of heat exhaustion. If symptoms of heat exhaustion recur, treat as above and release worker from the day's activities after he/she has fully recovered.
Heat Stroke	Red, hot, dry skin; disorientation; unconsciousness	Lack of or reduced perspiration; nausea; dizziness and confusion; strong, rapid pulse.	Immediately contact emergency medical services by dialing emergency medical services. Remove the victim to a cool, shady location and observe for signs of shock. Attempt to comfort and cool the victim by administering small amounts of cool water (if conscious), loosening clothing, and placing cool compresses at locations where major arteries occur close to the body's surface (neck, underarms, and groin areas). Carefully follow instructions given by emergency medical services until help arrives.

3.5.3 Cold Stress

Workers performing activities during winter and spring months may encounter extremely cold temperatures, as well as conditions of snow and ice, making activities in the field difficult. Adequate cold weather gear, especially head and foot wear, is required under these conditions. Workers should be aware of signs and symptoms of hypothermia and frostbite, as well as first aid for these conditions. These are summarized in the table below.

Condition	Signs	Symptoms	Response
Hypothermia	Confusion, slurred speech, slow movement.	Sleepiness, confusion, warm feeling.	Remove subject to a non-exposed, warm area, such as truck cab; give warm fluids; warm body core; remove outer and wet clothing and wrap torso in blankets with hot water bottle or other heat source. Get medical attention immediately.
Frostbite	Reddish area on skin, frozen skin.	Numbness or lack of feeling on exposed skin.	Place affected extremity in warm, not hot, water, or wrap in warm towels. Get medical attention.
Trench Foot	Swelling and/or blisters of the feet	Tingling/itching sensation; burning; pain in the feet	Remove wet/constrictive clothing and shoes. Gently dry and warm feet with slight elevation. Seek medical attention.

3.5.4 Lightning/Electrical Storms

Lightning can be unpredictable and may strike many miles in front of, or behind, a thunderstorm. Workers will therefore cease field operations at the **first** sign of a thunderstorm and suspend activities until at least 30 minutes after the last observed occurrence of lightning or thunder. For purposes of this HSCP, signs of a thunderstorm will include any visible lightning or audible thunder.

In the event of a thunderstorm, field personnel will take the following actions.

- Get inside a permanent building structure (not a shed or canopy) or fully enclosed metal vehicle (not a convertible or camper shell) with the windows fully up.
- If in a house or building, do not use the telephone or any electrical appliance that's connected to the building's electrical wiring.

- Stay away from tall isolated objects, such as trees, drill rigs, telephone poles, or flag poles.
- Avoid large open areas, such as fields or parking lots, where a person is the relatively highest object.
- Stay away from lakes, ponds, railroad tracks, fences, and other objects that could transmit current from a distant lightning strike.
- If caught out in the open without time to escape or find shelter, seek a low area (if time permits), crouch down, and bend forward holding the ankles. Tuck the head so that it's not the highest part of the body, without letting it touch the ground. Under no circumstances lay down.

If a person struck by lightning contact emergency medical services, even if he/she appears only stunned or otherwise unhurt as medical attention may still be needed. Check for burns, especially at fingers and toes, and areas next to buckles and jewelry.

3.5.5 Hurricanes

The key to responding to hurricane conditions is being informed. Before taking to the roads to leave for or from a jobsite during suspect hurricane conditions, listen to the radio for current and forecast conditions. Know what the weather reports mean by "watch" and "warning." A hurricane watch means hurricane conditions are possible in the specified area of the watch, usually within 36 hours. A hurricane warning indicates hurricane conditions are expected in the specified area of the warning, usually within 24 hours.

If watch or warning conditions exist, employees will communicate with the project manager to determine the appropriate course of action. Travel to or from work is not recommended if the employee will travel in the vicinity of a hurricane warning area. Restrictions on travel during hurricane watches are largely dependent on the actual weather conditions at the time. Employees are discouraged from driving during weather conditions where visibility and vehicle control are severely limited.

For long term projects with temporary or permanent office area, keep an emergency preparedness kit consisting of, but not limited to:

- Current project/office contacts list - how to reach folks in an emergency ,
- Blankets,
- Flashlights,
- Radio (operated by batteries),
- Batteries for flashlight and radio (note: batteries should be replaced annually to assure freshness) ,
- Water (unless there is a water bubbler that can be used with no electricity), and
- Snack crackers, dried fruit, etc. - a source of food that won't go bad.

3.5.6 Tornados and Strong/Straight Line Winds

Tornados and strong or straight line winds are potentially dangerous weather conditions because both have the ability to generate on very short notice (in some cases under one hour from clear

weather conditions). Tornados and strong or straight line winds both have the same warning properties and recommendations. If a tornado "watch" is issued for your area, it means that a tornado is "possible". If a tornado "warning" is issued, it means that a tornado has actually been spotted, or is strongly indicated on radar, and it is time to go to a safe shelter immediately.

Be alert to what is happening outside, but do not place yourself in jeopardy by standing next to windows. Some common observations during a tornado include: a sickly greenish or greenish-black color to the sky; if there is a watch or warning announced or posted; an abrupt fall of hail (however, hail can occur in the absence of a tornado); a strange quiet that occurs within or shortly after a thunderstorm; clouds moving by very fast, especially in a rotating pattern or converging toward one area of the sky; a sound like a waterfall or rushing air at first, but turning into a roar as it comes closer (the sound of a tornado has been likened to that of both railroad trains and jets); debris dropping from the sky; an obvious "funnel-shaped" cloud that is rotating; or debris such as branches or leaves being pulled upwards, even if no funnel cloud is visible.

During a tornado warning or tornado occurrence, each employee is instructed to do the following:

- Proceed to interior rooms and halls on the lowest floor ***(do not use an elevator to exit an upper floor)***. Avoid halls that open to the outside in any direction. If there are no interior hallways, avoid those that open to the southwest, south, or west, since that is usually the direction from which the tornado will come.
- Stay away from glass, both windows and doors. Crouch down, and make as small a "target" as possible. If you have something with which to cover your head, do so, otherwise, use your hands.
- Exercise extreme caution when leaving your area of shelter. Be aware of potential hazards (i.e., natural gas smell, smoke, fire). In the event these hazards are encountered in your area of shelter, immediately evacuate the shelter. If the building/shelter has been damaged by a tornado, do not flush the toilets, as the sewer lines may have been damaged.
- If you are traveling in an automobile and can see a tornado, do not stay in your car and try to outrun a tornado. If possible, stop the car and enter the nearest business and seek shelter.
- If you are outside and it is not possible to get inside, seek a low lying ditch, culvert, etc. and keep your body as low to the ground and as braced as possible.

3.5.7 Earthquakes

Earthquakes strike suddenly, violently, and without warning. If your project is located near a fault line, earthquakes are an unpredictable possibility. For long term projects with temporary or permanent office area, keep an emergency preparedness kit consisting of, but not limited to:

- Current project/office contacts list - how to reach folks in an emergency,
- Blankets,
- Flashlights,
- Radio (operated by batteries),
- Batteries for flashlight and radio (<u>note</u>: batteries should be replaced as needed to assure freshness),
- Water (unless there is a water bubbler that can be used with no electricity), and

- Snack crackers, dried fruit, etc. - a source of food that won't go bad.

This kit is meant to serve as overnight survival in the event that it becomes unsafe to leave the project site. The kit's contents should be suited to meet the size and needs of your project.

If you feel the earth shaking, consider the following tips:

- Drop down; take cover under a desk or table and hold on.
- Stay indoors until the shaking stops and you are sure it is safe to exit.
- Stay away from bookcases, shelves, or anything that could fall on you.
- Stay away from windows.
- If inside a building, expect fire alarms and sprinklers to go off during the quake.
- If you are outdoors, find a clear spot away from buildings, trees, and power lines. Drop to the ground and cover your head.

If you are in a car, slow down and drive to a clear place, preferably away from power lines. Stay in the car until the shaking stops.

3.6 Biological Hazards

The following biological hazards have been identified and may be encountered during scheduled field activities.

- ☐ Bloodborne Pathogens/Sanitary Waste
- ☒ Rodents and Mammals
- ☒ Reptiles/Snakes
- ☒ Venomous Insects
- ☒ Mosquitoes
- ☐ Fire Ants
- ☒ Spiders/Scorpions
- ☒ Ticks
- ☒ Poisonous Plants

If any biological hazards are identified at the Site, workers in the area will immediately notify the SSO and nearby personnel.

3.6.1 Bloodborne Pathogens/Sanitary Waste

Potential exposure to bloodborne pathogens may occur during some work activities (e.g., sewer video surveys or source sampling), rendering first aid or CPR. Direct contact is an important route of exposure for bloodborne pathogens due to puncture injuries, contact with abraded skin, or contact with areas such as the eyes, without appropriate protection. While very few organisms can enter the body through normal intact skin, direct contact with sewage, blood and body fluids is to be avoided. Site personnel should thoroughly wash their hands and face before eating, drinking or smoking and before leaving the work site.

Exposure controls and Universal Precautions are required at suspect locations, in order to prevent contact with blood or other potentially infectious materials as specified in Brown and Caldwell's *Bloodborne Pathogens Program.* All blood or other potentially infectious material will be considered infectious regardless of the perceived status of the source individual. A Hepatitis B vaccination will be offered to BC personnel before the person participates in a task where direct exposure to potentially infectious materials is a possibility (i.e., first aid or CPR). For personnel who have potential exposure to sanitary wastes, a current tetanus/diphtheria inoculation or booster is recommended.

3.6.2 Rodents/Mammals

Animals may potentially carry the rabies virus or disease causing agents. Do not attempt to feed or touch animals. Feces from some small mammals may contain diseases such as Hanta Virus. Avoid generating dust in the vicinity of rodent feces. In addition, animals such as dogs or wild predators (i.e., cougars or coyotes) may pose an attack hazard. Persons should slowly back away in a non-threatening manner if an encounter with a threatening animal occurs. In order to avoid such encounters, use the buddy system and make noise when working in areas where such animals may be present.

3.6.3 Reptiles/Snakes

The primary reptiles of concern are venomous snakes (rattlesnake, water moccasin, and copperhead). Avoid contact and areas that may harbor snake populations including high grass, shrubs, and crevices. In the event of a bite, immobilize the affected area and contact emergency medical services. If more than 30 minutes from emergency care, apply bandage wrap two to four inches above the bite (**note**: bandage should be loose enough to slip your finger underneath).

Wear shoes and heavy pants when walking and hiking in areas where snakes are likely found. Do not reach into rocky cracks, under logs, or large rocks. Even if a snake looks dead, do not touch it. A snake can still bite up to one hour after its death. Do not get near or tease a snake. Snakes are shy creatures and generally will not attack unless bothered.

Diamond Back Rattle Snake

Diamond backs are large snakes. They have a row of dark diamonds down the back and a rattle on their tail. These snakes have cat-like eyes and a pit between their nostril and eye. Eastern diamond backs like pine flat woods and scrub areas where palmetto thickets and gopher tortoise burrows are found. These snakes travel during the day and hide at night.

Timber Rattle Snake

Timber rattle snakes have a reddish-brown stripe running down the center of their back and black crossbands. Their tails are solid black with a rattle. These snakes have cat-like eyes and a pit between their nostril and eye. Timber rattlers live in damp river beds, pine flat woods, swamps, and cane thickets.

Pygmy Rattle Snake

These small snakes are light to dark grey in color. They have a tiny rattle. Pygmy rattle snakes have cat-like eyes and a pit between their nostril and eye. These snakes are found in lowland pine flat

woods, prairies, around lakes, ponds, and swamps. Pygmy rattlers are aggressive and will strike anything within striking range.

Cottonmouth (Water Moccasin)

Young cottonmouths are often mistaken for copperheads because of their reddish-brown crossbands. As these snakes age, their cross bands darken until they become almost solid black. Cottonmouths live near water sources like lakes, streams, rivers, ponds, and swamps. When threatened, cottonmouths may coil and open their mouths as though ready to bite. The white inside of the mouth is what gives this snake its name, "cottonmouth".

Copperhead

Copperheads have dark coppery red-brown hourglass crossbands on a lighter brown color. The top of the head is covered with large plate-like scales. Copperheads have cat-like eyes and a pit between their nostril and eye. These snakes live in rocky, wooded areas and low, wet swampy areas. Copperheads are sluggish and rarely bite, unless stepped on or touched.

Coral Snake

The body of this snake is ringed with black, yellow and red bands. (Remember: Red on yellow can kill a fellow. Red on black, venom lack.) The head of a coral snake is black, while the tail is black and yellow.

3.6.4 Venomous Insects

Common examples include bees, fire ants and wasps. Avoid contact with insects and their hives. If stung, remove the stinger by gently scraping it out of the skin (do not use tweezers). If the worker is stung by an insect, immediately apply an ice pack to the affected area and wash area with soap and water and apply antiseptic. If an allergic reaction occurs, contact emergency medical services for appropriate treatment. Seek medical attention immediately if you are allergic to venomous stings such as bees or if anaphylaxis symptoms are present.

3.6.5 Mosquitoes

Mosquitoes may transmit diseases such as West Nile Virus. Symptoms of West Nile Virus include: fever, headache, tiredness, body aches, and occasional rash. Avoid mosquito bites by wearing long sleeved shirt and long pants. Apply insect repellent to clothes and/or skin (if FDA approved for topical use). Report any dead birds in the area to local health officials. Mosquitoes are most active from dusk to dawn.

3.6.6 Fire Ants

Red and Black Fire Ants are capable of inflecting numerous stings (7 to 9) per ant in a matter of seconds, and large numbers of fire ants will typically attack at the same time. Fire ants are very aggressive and will sting simply upon coming in contact with skin. Individuals who are allergic to bees should carry bee sting kits when there is the potential to come in contact with fire ants. Fire ants are predominantly located in the southern United States.

The best way to avoid fire ants is to avoid disturbing their mounds. Fire ant mounds are typically constructed in disturbed habitats such as open fields, along roadsides, lawns, and many other open sunny areas. The mounds are constructed of dirt and/or other organic materials. Mounds are typically 10" to 24" in diameter and approximately 18" in height. If you disturb a mound, get away from the mound immediately.

Fire ant stings typically leave tiny red blisters and sometimes white pustules. Symptoms of stings include blistering, burning, swelling, pain, and irritation of the affected area. Recommended treatment consists of antihistamines along with topical antibiotic cream. Anaphylaxis symptoms such as shortness of breath, discomfort, lowered heart rate, etc. may also accompany fire ant stings. Seek medical attention immediately if you are allergic to venomous stings such as bees or if anaphylaxis symptoms are present.

3.6.7 Spiders/Scorpions

The black widow and brown recluse spiders are the most venomous. Avoid contact with spiders and scorpions and areas where they may hide. They favor dark hiding places. Inspect clothing and shoes before getting dressed. Wear gloves and safety shoes when working with lumbar, rocks, inspecting buildings, etc. Signs and symptoms of bites include: headache, cramping pain/muscle rigidity, rash and/or itching, nausea, dizziness, vomiting, weakness or paralysis, and convulsions or shock. Wash bite area with soap and water and apply antibiotic cream. Contact emergency medical services if allergic reaction or severe symptoms occur.

3.6.8 Ticks

Deer ticks may carry and transmit Lyme disease to humans. Signs of Lyme disease include a reddish "bulls-eye" around the affected area approximately a week after the bite. Symptoms include headache, fever, and muscle/joint pain. Persons suspecting infection should contact a health professional. Whenever possible avoid areas likely to be infested with ticks during the spring and summer months.

Wear light-colored clothing so ticks can be easily spotted and removed. Wear long sleeves and pants and tuck pant legs into boots or socks. Apply insect repellents to clothing and skin (if FDA approved for topical application). Persons with long hair should tie their hair back to minimize the potential for ticks to nestle in the scalp.

Personnel should self perform tick checks once daily field work is completed. If a tick is embedded in the skin, use tweezers to grasp the tick's head (near the skin) and pull straight out. Consider saving the removed tick for laboratory analysis.

3.6.9 Poisonous Plants

Common examples include poison ivy, poison oak and poison sumac. Avoid contact. Long-sleeved shirts and pants will allow some protection against inadvertent contact. If contact occurs, immediately wash the affected area thoroughly with soap and water. If an allergic reaction occurs, seek the care of a medical professional.

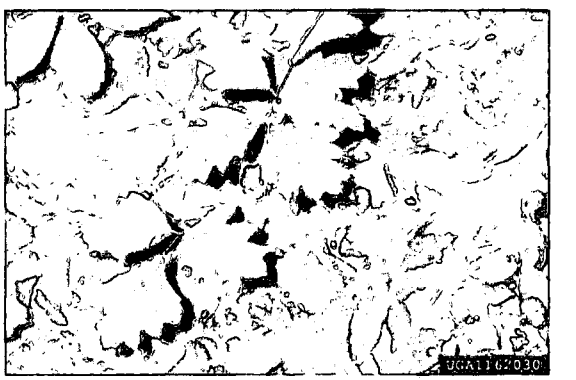

Poison Ivy is a trailing or climbing woody vine or a shrub-like plant with leaves that are each divided into three broad, pointed leaflets. The leaflets are commonly dark glossy green on top and slightly hairy underneath. They produce small yellowish or greenish flowers followed by berry-like drupes.

Poison Oak is a member of the same family as poison ivy and has a very similar appearance. Poison oak has leaves divided into three leaflets and generally has three to seven distinct lobes. Typically they are a shrubby type plant that can grow to eight feet in height, or sometimes can be a climbing plant.

The best way to prevent exposure is the ability to recognize these plants. Conduct an initial survey of the area to determine if the plants are present in the work area, and avoid contact with them.

If plants are located and work must be conducted in that area, have the plants removed if possible. If this is not possible, wear long sleeved shirts, gloves, and a heavy material type pants. Remember not to touch contaminated clothing. There are products available that can be applied to exposed skin, (similar to sunscreen products) prior to working around the plants. Tyvek suits may be another option used at the wearer's discretion to keep poisonous plant oils from getting on clothing. Please note that using Tyvek suits may increase the risk of heat stress conditions so extra precautions should be taken such as more frequent breaks and drinking plenty of fluids.

4. PERSONAL PROTECTIVE EQUIPMENT

The purpose of PPE is to protect employees from hazards and potential hazards they are likely to encounter during site activities. The amount and type of PPE used will be based on the nature of the hazard encountered of anticipated. Respiratory protection will be utilized when an airborne hazard has been identified using real-time air monitoring devices, or as a precautionary measure in areas designated by the RSUM or SSO.

Dermal protection, primarily in the form of chemical-resistant gloves and coveralls, will be worn whenever contact with chemically affected materials (e.g., soil, groundwater, sludge) is anticipated, without regard to the level of respiratory protection required.

On the basis of the hazards identified for this project, the following levels of personal protective equipment (PPE) will be required and used. Changes to the specified levels of PPE will not be made without the approval of the SSO after consultation with the RSUM.

4.1 Conditions Requiring Level D Protection

In general, site activities will commence in Level D PPE unless otherwise specified, or if the SSO determines on site that a higher level of PPE is required. Air monitoring of employee breathing zones will be routinely conducted using real-time air monitoring devices to determine if upgrading to Level C PPE is necessary. Level D PPE will be permitted as long as air monitoring data indicate that airborne concentrations of chemicals of concern are maintained below the site-specific action levels defined in Section 5.2. Level A or B PPE is not anticipated and is therefore not addressed in this plan. If Level A or B PPE is necessary, this HSCP will be revised to reflect changes as appropriate.

It is important to note that dermal protection is required whenever contact with chemically-affected materials is anticipated. The following equipment is specified as the minimum PPE required to conduct activities at the Site:

- Work shirt and long pants,
- ANSI- or ASTM-approved steel-toed boots or safety shoes,
- ANSI-approved safety glasses, and
- ANSI-approved hard hat.

Other personal protection readily available for use, if necessary, includes the following items.

- Outer nitrile gloves (11 mil or thicker) and inner nitrile surgical gloves when direct contact with chemically affected soils or groundwater is anticipated (nitrile surgical gloves may be used for collecting or classifying samples as long as they are removed and disposed of immediately after each sampling event).
- Chemical-resistant clothing (e.g., Saranex or Saranex coveralls) when contact with chemically affected soils or groundwater is anticipated.

- Safety shoes/boots with protective overboots or knee-high PVC polyblend boots when direct contact with chemically affected soils is anticipated.
- Hearing protection.
- Sturdy work gloves.
- High-visibility traffic safety vest.

Work will cease and PPE upgraded if action levels specified in Section 5.2 are exceeded. The RSUM will be notified whenever PPE is upgraded or downgraded.

4.2 Conditions Requiring Level C Protection

If air monitoring indicates that the site-specific action levels defined in Section 5.2 are exceeded, workers in the affected area(s) will upgrade PPE to Level C. In addition to the protective equipment specified for Level D, Level C also includes the following items.

- NIOSH-approved half- or full-face air-purifying respirator (APR) equipped with appropriate cartridges (reference Section 5.2). Note: safety glasses are not required when wearing a full-face APR.
- Outer nitrile gloves (11 mil or thicker) and inner nitrile surgical gloves when direct contact with chemically affected soils or groundwater is anticipated (nitrile surgical gloves may be used for collecting or classifying samples as long as they are removed and disposed of immediately after each sampling event).
- Chemical-resistant clothing (e.g., Tyvek or polycoated Tyvek coveralls) when contact with chemically affected soils or groundwater is anticipated.
- Safety shoes/boots with protective overboots or knee-high PVC polyblend boots when direct contact with chemically affected soils is anticipated.
- Hearing protection.
- Sturdy work gloves.

Respirators will be stored in clean containers (i.e., self-sealing bag) when not in use. Respirator cartridges will be replaced in accordance with the following change-out schedule.

Type of Cartridge	Cartridge Change-out Schedule
Particulate (i.e., HEPA)	At least weekly or sooner the employee detects an increase in breathing resistance. This will occur as the filter becomes loaded with particulate matter.
Sorbent (i.e., organic vapor)	At the end of each day's use or sooner if the employee detects an abnormal odor or other indicator.

Personnel who wear air-purifying respirators must be trained in their use and must have successfully passed either a qualitative or quantitative respirator fit test, and medical evaluation within the last 12 months in accordance with and 29 CFR 1910.134.

4.3 Stop Work Conditions

If air monitoring indicates that the site-specific action levels defined in Section 5.2 are exceeded, activities will cease, and personnel must evacuate the designated Exclusion Zone. The PM and RSUM will be contacted immediately.

Work will also cease if unanticipated conditions or materials are encountered or if an imminent danger is identified. The SSO will immediately contact the RSUM for consultation.

5. AIR MONITORING PLAN

Real-time air monitoring devices will be used to analyze airborne contaminant concentrations approximately every 15 minutes in the workers' breathing zones while workers are in the designated Exclusion Zone, or when task or exposure conditions change (whichever frequency is less). If elevated concentrations are indicated, the monitoring frequency will be increased, as appropriate.

Background concentrations will be determined at the beginning of each work shift by collecting several instrument readings upwind of the scheduled activities. Alternatively, background levels can be determined by collecting readings from a nearby (upwind) area that can reasonably be considered unaffected by Site activities.

Real-time measurements will be made as near as feasible to the breathing zone of the worker with the greatest exposure potential in each active work area. If authorized by the RSUM, real time measurements may cease being taken when enough historical data is generated to warrant its cessation. Air monitoring will be reinstated if potential exposure conditions change.

The equipment will be calibrated daily, and the results will be recorded on BC's Air Monitoring Form. The results of air monitoring will also be recorded on the Air Monitoring Form and will be retained in the project files following completion of field activities. A copy of the Air Monitoring Form is located in Appendix A.

5.1 Monitoring Instrument

Continuous air monitoring will be used in secure areas to identify airborne contaminants using direct reading instruments, including:

- Jerome 431-X mercury vapor analyzer (MVA).
  - Continuous air monitoring will be conducted at each Secure Zone using the MVA. Background MVA readings will be obtained once each morning after calibration and following lunch. The background reading will be taken in an area removed and upwind of the site.

Specification sheets for the monitoring equipment will be maintained within their shipping or storage containers. Included will be methods for calibration, operation, troubleshooting, and minor repair. Availability of the specification sheets will be monitored by the Site Safety Officer. Deficiencies or operating problems with monitoring equipment will be made known to the Project Health and Safety Officer. The continuous monitoring equipment will be serviced and batteries placed on charge, as they are required. A maintenance log will be maintained for monitoring equipment and major discrepancy or operating malfunction must be brought to the attention of the Project Health and Safety Officer within 24 hours.

5.2 Site Specific Action Levels

The following action levels were developed for exposure monitoring with real-time air monitoring instruments. Air monitoring data will determine the required respiratory protection levels at the Site during scheduled intrusive activities. The action levels are based on sustained readings indicated by the instrument(s). Air monitoring will be performed and recorded at up to 15-minute intervals.

If elevated concentrations are indicated, the monitoring frequency will be increased, as appropriate. If during this time, sustained measurements are observed, the following actions will be instituted, and the PM and RSUM will be notified. For purposes of this HSCP, sustained readings are defined as the average airborne concentration maintained for a period of one (1) minute above established background levels.

Activity	Action Level	Level of Respiratory Protection
All remedial activities	< 0.013 mg/m^3	Level D: No respiratory protection required.
All remedial activities	0.013 to 0.13 mg/m^3	Level C: Full-face air-purifying respirator fitted with mercury vapor filter cartridges. Contact RSUM and PM immediately. Implement engineering controls.
All remedial activities	>0.13 mg/m^3	Level B: Air-supplied respirator (air supplied or self-contained breathing apparatus with a qualitative fit test). Contact RSUM and PM immediately. Implement engineering controls.
All remedial activities	>1.3 mg/m^3	Stop work. Contact RSUM and PM immediately.

6. SITE CONTROL MEASURES

The SSO will conduct a safety inspection of the work site before each day's activities begin to verify compliance with the requirements of the HSCP. Results of the first day's inspection will be documented on the Site Safety Checklist. A copy of the checklist is included in Appendix B. Thereafter, the SSO should document unsafe conditions or acts, along with corrective action, in the project field log book.

Procedures must be followed to maintain site control so that persons who may be unaware of site conditions are not exposed to hazards. The work area will be barricaded by tape, warning signs, or other appropriate means. Site equipment or machinery will be secured and stored safely.

Access to the specified work area will be limited to authorized personnel. Only BC employees and designated BC subcontracted personnel, as well as designated employees of the client, will be admitted to the work site. Personnel entering the work area are required to sign the signature page of this HSCP, indicating they have read and accepted the health and safety practices outlined in this plan.

In some instances it may be necessary to define established work zones: an Exclusion Zone, a Contamination Reduction Zone, and a Support Zone. Work zones may be established based on the extent of anticipated contamination, projected work activities, and the presence or absence of non-project personnel. The physical dimensions and applicability of work zones will be determined for each area based on the nature of job activity and hazards present. Within these zones, prescribed operations will commence using appropriate PPE. Movement between zones will be controlled at checkpoints.

Considerable judgment is needed to maintain a safe working area for each zone, balanced against practical work considerations. Physical and topographical barriers may constrain ideal locations. Field measurements combined with climatic conditions may, in part, determine the control zone distances. Even when work is performed in an area that does not require the use of chemical-resistant clothing, work zone procedures may still be necessary to limit the movement of personnel and retain adequate site control.

Personnel entering the designated Exclusion Zone should exit at the same location. There must be an alternate exit established for emergency situations. In all instances, worker safety will take precedence over decontamination procedures. If decontamination of personnel is necessary, exiting the Site will include the decontamination procedures described in the following section.

7. DECONTAMINATION PROCEDURES

Decontamination will take place in the decontamination area identified on-Site. Workers, PPE, sampling equipment, and heavy equipment leaving the exclusion area will be inspected to determine the level of decontamination necessary to prevent the spread of potentially hazardous materials. Unnecessary equipment and support vehicles are to be left outside the designated Exclusion Zone so that decontamination will not be necessary.

Despite protective procedures, personnel may come in contact with potentially hazardous compounds while performing work tasks. If so, decontamination needs to take place using an Alconox or TSP wash, followed by a rinse with clean water. Standard decontamination procedures for levels C and D are as follows.

- equipment drop,
- boot cover and outer glove wash and rinse,
- boot cover and outer glove removal,
- suit removal,
- safety boot wash and rinse,
- inner glove wash and rinse,
- respirator removal,
- inner glove removal, and
- field wash of hands and face.

Site workers should employ only applicable steps in accordance with level of PPE worn and extent of contamination present. The SSO shall maintain adequate quantities of clean water to be used for personal decontamination (i.e., field wash of hands and face) whenever a suitable washing facility is not located in the immediate vicinity of the work area.

Disposable items will be disposed of in an appropriate container. Wash and rinse water generated from decontamination activities will be handled and disposed of properly. Non-disposable items (i.e., respirators) may need to be cleaned or sanitized before reuse. Each site worker is responsible for the maintenance, decontamination, and sanitizing of their own PPE.

Used equipment may be decontaminated as follows.

- Remove adhered materials (i.e., dirt or mud) to increase the effectiveness of the decontamination process.
- An Alconox or TSP and water solution may be used to wash the equipment.
- The equipment will then be rinsed with clean water until it is determined clean.

Each person must follow these procedures to reduce the potential for transferring chemically affected materials off site.

8. TRAINING REQUIREMENTS

BC Site personnel, including subcontractors and visitors conducting work in controlled areas of the Site, must have completed the appropriate training as required by 29 CFR 1910.120. In addition, the SSO will have completed the 8-hour Site Supervisor course, have current training in first aid and CPR, and any additional training appropriate to the level of site hazards. Further site-specific training will be conducted by the SSO prior to the initiation of project activities. This training will include, but will not necessarily be limited to, emergency procedures, site control, personnel responsibilities, and the provisions of this HSCP. Each employee will document that they have been briefed on the hazards identified at the site and that they have read and understand the requirements of this HSCP by signing the H&S Plan Acknowledgement Form attached as Appendix C.

A daily morning briefing to cover safety procedures and contingency plans in the event of an emergency is to be included with a discussion of the day's activities. These daily meetings will be recorded on the Daily Tailgate Safety Meeting Form. A copy of the Daily Tailgate Safety Meeting Form is included in Appendix D.

9. MEDICAL SURVEILLANCE REQUIREMENTS

BC Site personnel, including subcontractors and site visitors, who will or may work in an area designated as an exclusion zone must have fulfilled the appropriate medical monitoring requirements in accordance with 29 CFR 1910.120(f). Each individual entering an exclusion zone must have successfully completed an annual surveillance examination and/or an initial baseline examination within the last 12 months.

Medical surveillance is conducted as a routine program for BC field staff in accordance with the requirements of 29 CFR 1910.120(f). There will not be any special medical tests or examinations required for staff involved in this project.

A Hepatitis B vaccination will be offered to BC personnel before the person participates in a task where direct exposure to potentially infectious materials is a possibility (i.e., first aid or CPR). For personnel who have potential exposure to sanitary wastes, a current tetanus/diphtheria inoculation or booster is recommended.

10. CONTINGENCY PROCEDURES

Minimum emergency equipment maintained on site will include a fully charged ABC dry chemical fire extinguisher, an adequately stocked first aid kit, and an emergency eyewash station (when corrosive chemicals are present). In addition, employees will consider maintaining the personal emergency supply items listed in Section 3: Natural Phenomena, as appropriate.

In the event of an emergency, site personnel will signal distress with three blasts of a horn (a vehicle horn will be sufficient), or other predetermined signal. Communication signals, such as hand signals, must be established where communication equipment is not feasible or in areas of loud noise.

It is the SSO's duty to evaluate the seriousness of the situation and to notify appropriate authorities. The first part of this plan contains emergency telephone numbers as well as directions to the hospital. Nearby telephone access must be identified and available to communicate with local authorities. If a nearby telephone is not available, a cellular telephone will be maintained on site during work activities. The operation of the cellular phone will be verified to ensure that a signal can be achieved at the work location.

The SSO, or designee, should contact local emergency services in the event of an emergency. After emergency services are notified, the PM and RSUM will be notified of the situation as soon as possible. If personal injury, property damage or equipment damage occurs, the PM and BC Risk Manager will be contacted as soon as practicable. An Accident/Incident Investigation Report will be completed within 24 hours by the SSO, or other designated person. A copy of the Accident/Incident Investigation Report is included in Appendix E.

10.1 Injury or Illness

If an exposure or injury occurs, work will be temporarily halted until an assessment can be made to determine it is safe to continue work. The SSO, in consultation with the RSUM, will make the decision regarding the safety of continuing work. The SSO will conduct an investigation to determine the cause of the incident and steps to be taken to prevent recurrence.

In the event of an injury, the extent and nature of the victim's injuries will be assessed and first aid/CPR will be rendered as appropriate. If necessary, emergency services will be contacted or the individual may be transported to the nearby medical center. The mode of transportation and the eventual destination will be based on the nature and extent of the injury. A hospital route map is presented at the front of this HSCP.

In the event of a life-threatening emergency, the injured person will be given immediate first aid and emergency medical services will be contacted by dialing the number listed in the Critical Project

Information section at the beginning of this plan. The individual rendering first aid will follow directions given by emergency medical personnel via telephone.

10.2 Vehicle Collision or Property Damage

If a vehicle collision or property damage event occurs, the SSO, or designee, will contact the BC Risk Manager for appropriate action.

10.3 Fire

In the event of fire, the alarm will be sounded and Site personnel will evacuate to a safe location (preferably upwind). The SSO, or designee, should contact the local fire department immediately by dialing 911. When the fire department arrives, the SSO, or designated representative, will advise the commanding officer of the location and nature of the fire nature, and identification of hazardous materials on site. Only trained, experienced fire fighters should attempt to extinguish substantial fires at the Site. Site personnel should not attempt to fight fires, unless properly trained and equipped to do so. Site personnel should not attempt to fight a fire if it poses a risk to their personal safety.

Note that smoking is not permitted in controlled areas (i.e., exclusion or contamination reduction zones), near flammable or combustible materials, or in areas designated by the facility as non-smoking areas.

10.4 Underground Utilities

In the event that an underground conduit is damaged during subsurface work, mechanized equipment will immediately be shut off and personnel will evacuate the area until the nature of the piping can be determined. Depending on the nature of the broken conduit (e.g., natural gas, water, or electricity), the appropriate local utility will be contacted.

10.5 Site Evacuation

The SSO will designate evacuation routes and refuge areas to be used in the event of a Site emergency. Site personnel will stay upwind from vapors or smoke and upgradient from spills. If workers are in an Exclusion or Contamination Reduction Zone at the start of an emergency, they should exit through the established decontamination corridors, if possible. If evacuation cannot be done through an established decontamination area, site personnel will go to the nearest safe location and remove chemically-affected clothing there or, if possible, leave it near the Exclusion Zone. Personnel will assemble at the predetermined refuge following evacuation and decontamination. The SSO, or designated representative, will count and identify site personnel to verify that all have been evacuated safely.

10.6 Spill of Hazardous Materials

If a hazardous material spill occurs, site personnel should locate the source of the spill and determine the hazard to the health and safety of site workers and the public. Attempts to stop or reduce the flow should only be performed if it can be done without risk to personnel.

Isolate the spill area and do not allow entry by unauthorized personnel. De-energize sources of ignition within 100 feet of the spill, including vehicle engines. Should a spill be of the nature or extent that it cannot be safely contained, or poses an imminent threat to human health or the environment, an emergency cleanup contractor will be called out as soon as possible. Spill containment measures listed below are examples of responses to spills.

- Right or rotate containers to stop the flow of liquids. This step may be accomplished as soon as the spill or leak occurs, providing it is safe to do so.
- Sorbent pads, booms, or adjacent soil may be used to dike or berm materials, subject to flow, and to solidify liquids.
- Sorbent pads, soil, or booms, if used, must be placed in appropriate containers after use, pending disposal.
- Contaminated tools and equipment shall be collected for subsequent cleaning or disposal.

10.7 Work Planning: First Responders

This section will be reviewed together with project personnel and Colonie, NY emergency response workers before the project start-up in order to identify the potentially hazardous conditions that may be associated with specific task activities.

BC will organize an on-site meeting with all relevant first responders who have jurisdiction in the vicinity of the work site. The first responders include members of the Albany Medical Center, Colonie Police Department, Colonie Fire Company, Albany County Sheriff's Department, and Colonie Emergency Management. BC will use this meeting to communicate the site hazards and formulate an emergency notification chain of command for any physical or chemical concerns that may arise during the investigational or remedial activities.

The SSO and their alternate designee will be identified daily during the tailgate safety meeting.

10.8 Emergency Response

In the event of an emergency the SSO or their designee will be immediately notified. Once notified they will assume the role of Team Leader.

The Team Leader will be responsible to direct on site emergency response and will activate emergency response in accordance with the chain of command that is established during the First Responders preconstruction meeting.

While all associates have the authority to stop work or call for a site evacuation, it will be the Team Leader who will, in most cases, make the decision whether site evacuation is necessary.

In the event of a site evacuation the Team Leader will be responsible for taking role at the muster area to determine if all associates have safely evacuated the site. All associates will remain in the muster area until they are released by the SSO or Team Leader.

Once First Responders arrive on site, the Team Leader will relinquish the role of incident commander to the appropriate agency representative and resume their role as the SSO and will remain available to assist the First Responders as needed.

All notifications to the surrounding community will be made through the appropriate agency or at that agency's direction.

11. DOCUMENTATION

The implementation of the HSCP must be documented on the appropriate forms (see appendices) to verify employee participation and protection. In addition, the regulatory requirements must be met for recordkeeping on training, medical surveillance, injuries and illnesses, exposure monitoring, health risk information, and respirator fit-tests. Documentation of each BC employee's health and safety records is maintained by the Health and Safety Data Manager in Walnut Creek, California.

Health and safety documentation and forms completed, as specified by this plan, are to be retained in the project file.

Other relevant project-specific health and safety documents, such as MSDSs or client-specified procedures, will be attached to this HSCP in Appendix F.

APPENDIX A

Air Monitoring Form

Air Monitoring Form

Page ____ of ____

Instructions: Complete this form immediately prior to project start.

Name of Project/Site:	**Project No:**
Project/Site Location:	
Employee Performing Air Monitoring: (Print and Sign):	**Date:**

Photo Ionization/Flame Ionization Detectors (PIDs/FIDs)

☐ PID ☐ FID	**Manufacturer:**	**Model:**	**Serial #:**
Initial Calibration Reading:		**End-of-Use Calibration Reading:**	
Calibration Standard/Concentration:			

Mini-RAM Dust Monitor

Manufacturer:	**Model:**	**Serial #:**
Zeroed in Z-Bag? ☐ Yes ☐ No		

Monitoring Data

Time	Location and Activity	PID/FID (ppm)	Mini-RAM (mg/m³)	Time	Location and Activity	PID/FID (ppm)	Mini-RAM (mg/m³)

APPENDIX B

Site Safety Checklist

Site Safety Checklist

Page ____ of ____

Instructions: Complete this form immediately prior to project start.

Name of Project/Site:	Project No:
Project/Site Location:	
Employee Completing Checklist: (Print and Sign):	Date:

Yes	No	N/A		Yes	No	N/A	
☐	☐	☐	Written Health and Safety (H&S) Plan is on site?	☐	☐	☐	Respirators are available, properly cleaned, and stored?
☐	☐	☐	Addenda to the H&S Plan are documented on site?	☐	☐	☐	Overhead utilities do not present a hazard to equipt./personnel?
☐	☐	☐	H&S Plan information matches conditions/activities at the site?	☐	☐	☐	Traffic control measures have been implemented?
☐	☐	☐	H&S Plan read/signed by all site personnel, including visitors?	☐	☐	☐	Trenches and excavations are safe for entry?
☐	☐	☐	Daily tailgate H&S meetings have been held/documented?	☐	☐	☐	Soil Spoils are at least 2 feet from the edge of the excavation?
☐	☐	☐	Site personnel have required training and medical?	☐	☐	☐	Emergency/FA equipt. is on site as described in the H&S Plan?
☐	☐	☐	Air monitoring is performed/documented per the H&S Plan?	☐	☐	☐	Drinking water is readily available?
☐	☐	☐	Air monitoring equipment has been calibrated daily?	☐	☐	☐	Phone is readily available for emergency use?
☐	☐	☐	Site zones are set up and observed where appropriate?	☐	☐	☐	Utility locator has cleared subject locations?
☐	☐	☐	Access to the work area limited to authorized personnel?	☐	☐	☐	Proper drum and material handling techniques are used?
☐	☐	☐	Decontamination procedures followed/match the H&S Plan?	☐	☐	☐	Waste containers/drums are labeled appropriately?
☐	☐	☐	Decontamination stations (incl. hand/face wash) are set up and used?	☐	☐	☐	Ext. cords are grounded/protected from water/vehicle traffic?
☐	☐	☐	PPE used matches H&S Plan requirements?	☐	☐	☐	Tools and equipment are in good working order?
☐	☐	☐	Hearing protection used where appropriate?	☐	☐	☐	GFCIs used for portable electrical tools and equipment?

Notes

(All "no" answers must be addressed and corrected immediately. Note additional health and safety observations here):

APPENDIX C

H&S Plan Acknowledgement Form

H&S Plan Acknowledgement Form

Instructions: Complete this form immediately prior to project start or as new personnel join the project.

Name of Project/Site:	**Project No:**
Project/Site Location:	
Employee Performing Briefing: (Print and Sign):	**Date:**

Employee Acknowledgement:

The following signatures indicate that these personnel have read and/or been briefed on this Health and Safety (H&S) Plan and understand the potential hazards/controls for the work to be performed.

Important Notice to Subcontractor(s):

Subcontractors are responsible for developing, maintaining, and implementing their own health and safety programs, policies, procedures and equipment as necessary to protect their workers, and others, from their activities. Subcontractors shall operate equipment in accordance with their standard operating procedures as well as manufacturer's specifications. Any project monitoring activities conducted by BC at the Site shall not in any way relieve subcontractors of their critical obligation to monitor their operations and employees for the determination of exposure to hazards that may be present at the Site and to provide required guidance and protection. If requested, subcontractors will provide BC with a copy of their own H&S Plan for this project or other health and safety program documents for review.

BC's Health and Safety Plan has been prepared specifically for this project and is intended to address health and safety issues solely with respect to the activities of BC's own employees at the site. A copy of BC's H&S Plan may be provided to subcontractors in an effort to help them identify expected conditions at the site and general site hazards. The subcontractor shall remain responsible for identifying and evaluating hazards at the site as they pertain to their activities and for taking appropriate precautions. For example, BC's H&S Plan does not address specific hazards associated with tasks and equipment that are particular to the subcontractor's scope of work and site activities. (e.g., operation of a drill rig, excavator, crane or other equipment). Subcontractors are not to rely on BC's H&S Plan to identify all hazards that may be present at the Site. Subcontractor personnel are expected to comply fully with subcontractor's Health and Safety Plan and to observe the minimum safety guidelines applicable to their activities which may be identified in the BC H&S Plan. Failure to do so may result in the removal of the subcontractor or any of the subcontractor's workers from the job site.

Print	Sign	Date	Print	Sign	Date

APPENDIX D

Daily Tailgate Meeting Form

Daily Tailgate Meeting Form

Page ____ of ____

Name of Project/Site:	Project No:
Project/Site Location:	
Employee Completing Form: (Print and Sign):	Date:

Employee Acknowledgement:

The following signatures indicate that these personnel have read and/or been briefed on this Health and Safety (H&S) Plan and understand the potential hazards/controls for the work to be performed.

Important Notice to Subcontractor(s):

Subcontractors are responsible for developing, maintaining, and implementing their own health and safety programs, policies, procedures and equipment as necessary to protect their workers, and others, from their activities. Subcontractors shall operate equipment in accordance with their standard operating procedures as well as manufacturer's specifications. Any project monitoring activities conducted by BC at the Site shall not in any way relieve subcontractors of their critical obligation to monitor their operations and employees for the determination of exposure to hazards that may be present at the Site and to provide required guidance and protection. If requested, subcontractors will provide BC with a copy of their own H&S Plan for this project or other health and safety program documents for review.

BC's Health and Safety Plan has been prepared specifically for this project and is intended to address health and safety issues solely with respect to the activities of BC's own employees at the site. A copy of BC's H&S Plan may be provided to subcontractors in an effort to help them identify expected conditions at the site and general site hazards. The subcontractor shall remain responsible for identifying and evaluating hazards at the site as they pertain to their activities and for taking appropriate precautions. For example, BC's H&S Plan does not address specific hazards associated with tasks and equipment that are particular to the subcontractor's scope of work and site activities. (e.g., operation of a drill rig, excavator, crane or other equipment). Subcontractors are not to rely on BC's H&S Plan to identify all hazards that may be present at the Site. Subcontractor personnel are expected to comply fully with subcontractor's Health and Safety Plan and to observe the minimum safety guidelines applicable to their activities which may be identified in the BC H&S Plan. Failure to do so may result in the removal of the subcontractor or any of the subcontractor's workers from the job site.

Print	Sign	Date	Print	Sign	Date

Plan of the Day

(Describe the activities that are planned to be performed today)

Potential Hazards and Topics Discussed

(Describe the potential hazards and controls that may be associated with planned activities)

☐ Electrical ☐ Chemical ☐ Biological ☐ Physical ☐ Other (specify):

APPENDIX E

Incident Investigation Report

Incident Investigation Report

Instructions:

If an accident or incident occurs, complete all applicable information in this form, make a copy for your records, and immediately forward the original to the office Health and Safety Coordinator (HSC). If fields are not applicable, indicate with "N/A". Use separate sheet(s) if necessary and attach sketches, photographs, or other information that may be helpful in understanding how the accident/incident occurred.
HSC – Review and enter report into the BC Online Safety Observation and Incident Reporting System within 3 workdays of receipt. File original in appropriate office health and safety file.

NOTE:

This report is important – please take the time necessary to properly complete it. Incomplete reports will be forwarded to appropriate management for review and action.

General Information

Date of Accident/Incident	**Time of Accident/Incident:**	**Date Accident/Incident Reported:**	**To Whom:**
Exact Location of Accident/Incident (Street, City, State):			**BC Office:**
Name Project:			**Project Number:**
Employee Completing the Investigation (Print and Sign):			**Date:**

Injured/Ill Employee/Property Damage Information

Employee Name:	**Employee No.**	**Department:**	**Phone Number:**
Job Title:		**Manager's Name and Phone Number:**	
Nature of Injury/Illness (laceration, contusion, strain, etc.):		**Body Part Affected** (arm, leg, head, hand, etc.):	
Describe Property Damage and Estimate Loss :			

Description of Accident/Incident

Describe the accident sequentially, beginning with the initiating event, and followed by secondary and tertiary events. End with the nature and extent of injury/damage. Name any object or substance and tell how they were included. Examples: 1) Employee was pulling utility cart that was loaded with wastepaper from office area to hallway. Wheel of utility cart caught against door casing. Bags of heavy wastepaper that were in cart fell to end of cart. Cart tipped over onto foot of employee. Right foot was crushed between utility cart and door casing, resulting in severe contusion to right foot of employee. 2) Employee was driving rental car from office to project site. Car struck icy section of road. Employee lost control of vehicle, which skidded across road into concrete abutment on side of road. Accident resulted in damage to right fender, tire, headlight, and grill.

Incident Investigation Report

Analysis of Accident Causes

Immediate Causes - Substandard Actions

What substandard actions caused or could have caused the accident/incident? State the actions on the part of the employee or others that contributed to the occurrence of the accident/incident. Examples: 1) Employee overloaded the utility cart with wastepaper. 2) Employee exceeded safe speed on icy road, and was inattentive to hazard.

Codes (check all that apply)

- ☐ 1. Operating equipment without authority
- ☐ 2. Failure to warn
- ☐ 3. Failure to secure
- ☐ 4. Operating at improper speed
- ☐ 5. Making safety devices inoperable
- ☐ 6. Removing safety devices
- ☐ 7. Using defective equipment
- ☐ 8. Using equipment improperly
- ☐ 9. Failure to use PPE properly
- ☐ 10. Improper loading
- ☐ 11. Improper placement
- ☐ 12. Improper lifting
- ☐ 13. Improper position for task
- ☐ 14. Servicing equipment in operation
- ☐ 15. Horseplay
- ☐ 16. Alcohol or drug influence
- ☐ 17. Other (specify)

Immediate Causes - Substandard Conditions

What substandard conditions caused or could have caused the accident/incident? State the conditions that existed at the time of the accident (the specific control factors that were or may have been the direct or immediate cause or causes of the accident). Examples: 1) Wheel of utility cart was worn and would not roll properly; utility cart was overloaded with wastepaper. 2) Road was covered with icy spots; weather was foggy.

Codes (check all that apply)

- ☐ 1. Inadequate guards or barriers
- ☐ 2. Inadequate or improper PPE
- ☐ 3. Defective tools, equipment, or materials
- ☐ 4. Congestion or restricted action
- ☐ 5. Inadequate earning system
- ☐ 6. Fire and explosion hazards
- ☐ 7. Poor housekeeping
- ☐ 8. Noise exposures
- ☐ 9. Radiation exposures
- ☐ 10. High or low temperature exposures
- ☐ 11. Inadequate or excess illumination
- ☐ 12. Inadequate ventilation
- ☐ 13. Hazardous environ. conditions (vapors, dusts, etc.)
- ☐ 14. Other (specify)

Basic Causes - Personal and Job Factors

What personal and/or job factors caused or could have caused the accident/incident? State the influencing factors or underlying causes, either conditions or actions or both, that contributed to the accident/incident. Examples: 1) Employee had not been instructed in overloading hazards. 2) Employee had not been trained in driving under winter conditions; company has no driver training program.

Codes (check all that apply)

Personal Factors

☐ 1. Inadequate capability ☐ 2. Lack of knowledge ☐ 3. Lack of skill ☐ 4. Improper motivation
☐ 5. Other (specify):_____

Job Factors

☐ 1. Inadequate leadership/supervision ☐ 2. Inadequate engineering ☐ 3. Inadequate purchasing ☐ 4. Inadequate maintenance ☐ 5. Inadequate tools/equipment
☐ 6. Inadequate work standards/procedures ☐ 7. Inadequate Wear and tear ☐ 8. Abuse or misuse
☐ 9. Other (specify):

Remedial Actions

Describe the actions taken or planned to prevent recurrence of accident/incident - provide the implementation date and person responsible for any planned corrective action.. Examples: 1) Wheels of utility cart were replaced with larger size wheels; all carts were inspected for safe operation; employees were instructed in overloading hazards. 2) All project personnel were instructed at the safety training meeting on driving under hazardous conditions; driver training program will be implemented.

Codes (check all that apply)

Job Factors

☐ 1. Reinstruction of personnel involved ☐ 2. Reprimand of personnel involved ☐ 3. Temporary/permanent reassignment of personnel ☐ 4. Action to improve clean-up
☐ 5. Equipment repair or replacement ☐ 6. Improve design ☐ 7. Improve construction ☐ 8. Improve PPE ☐ 9. Install of safety guard or device ☐ 10. Work method change
☐ 11. Order use of safer materials ☐ 12. Regional Safety Unit Manager Review
☐ 13. Other (specify):

APPENDIX F

Miscellaneous Health and Safety Information