HAYDEN AREA REGIONIAL SEWER BOARD

Protecting the Aquifer Since '88

10789 N. Atlas Road • Hayden, Idaho 83835 • Fax (208) 772-3863

Ken Windram, Manager
Phone (208) 772-0672

May 28, 2010

Mr. Brian Nickel
US EPA, Region 10
1200 Sixth Avenue, Suite 900
Seattle, WA 98101

RE: HAYDEN AREA REGIONAL SEWER BOARD - NPDES APPLICATION FORM 2A

Dear Mr. Nickel:

This letter is in response to your request for a new NPDES Application Form 2A for the Hayden Area Regional Sewer Board (HARSB). .

The HARSB Wastewater Treatment Facility is owned and operated by the Hayden Area Regional Sewer Board under a Joint Powers Agreement between the City of Hayden, the Hayden Lake Water and Sewer District and Kootenai County. It treats typical municipal wastewater from the City of Hayden the City of Hayden Lake, Kootenai County Airport and unincorporated areas of the County within the Sewer District. The wastewater is all pumped to the treatment plant in multiple force mains and lift stations. The combined flow is metered at the headworks.

The treatment process used is a biological secondary process. The facility is designed to remove BOD and suspended solids.

The wastewater is screened and degritted then divided between three parallel oxidation ditches (1 through 3) and four parallel secondary clarifiers (1 through 4). The clarified water from the treatment trains is recombined for disinfection with chlorine gas. A dechlorination system removes excess chlorine in the final treated water prior to discharge to the Spokane River. When River flows fall below 2,000 cubic feet per second between June 1st and September 30th, reclaimed water is diverted to a HARSB reuse farm under a separate Idaho Department of Environmental Quality permit.

Residual biosolids are dewatered and then composted off-site by a licensed contract operator.

Diesel generators provide a back-up power supply for the entire facility.

The attached flow schematic shows the process units, flows rates, flow directions and recycle streams.

HAYDEN AREA REGIONIAL SEWER BOARD

Please review our information. If you have questions, please contact me.

Sincerely,

Ken Windram, Manager
Hayden Area Regional Sewer Board

Enclosures

FACILITY NAME AND PERMIT NUMBER:
HAYDEN AREA REGIONAL SEWER BOARD ID002659-0

Form Approved 1/14/99
OMB Number 2040-0086

BASIC APPLICATION INFORMATION

PART A. BASIC APPLICATION INFORMATION FOR ALL APPLICANTS:

All treatment works must complete questions A.1 through A.8 of this Basic Application Information packet.

A.1. Facility Information.

Facility name: HAYDEN AREA REGIONAL SEWER BOARD

Mailing Address: 10789 N. ATLAS RD., HAYDEN ID 83835

Contact person: KEN WINDRAM

Title: MANAGER

Telephone number: (208) 772-0672

Facility Address (not P.O. Box): 10789 N. ATLAS RD., HAYDEN ID 83835

A.2. Applicant Information. If the applicant is different from the above, provide the following:

Applicant name: HAYDEN AREA REGIONAL SEWER BOARD

Mailing Address: 10789 N. ATLAS RD., HAYDEN ID 83835

Contact person: KEN WINDRAM

Title: MANAGER

Telephone number: (208) 772-0672

Is the applicant the owner or operator (or both) of the treatment works?

✓ owner ✓ operator

Indicate whether correspondence regarding this permit should be directed to the facility or the applicant.

✓ facility ____ applicant

A.3. Existing Environmental Permits. Provide the permit number of any existing environmental permits that have been issued to the treatment works (include state-issued permits).

NPDES	ID002659-0	PSD	N.A.
UIC	N.A.	Other	
RCRA	N.A.	Other	

A.4. Collection System Information. Provide information on municipalities and areas served by the facility. Provide the name and population of each entity and, if known, provide information on the type of collection system (combined vs. separate) and its ownership (municipal, private, etc.).

Name	Population Served	Type of Collection System	Ownership
CITY OF HAYDEN	14,317	GRAVITY - PUMP STATIO	CITY OF HAYDEN
HLRWSD	4,775	GRAVITY - PUMP STATIO	HLRWSD
KOOTENAI COUNTY	195	GRAVITY - PUMP STATIO	KOOTENAI COUNTY

Total population served 19,287

A.5. Indian Country.

a. Is the treatment works located in Indian Country?

____ Yes ✓ No

b. Does the treatment works discharge to a receiving water that is either in Indian Country or that is upstream from (and eventually flows through) Indian Country?

✓ Yes ____ No

A.6. Flow. Indicate the design flow rate of the treatment plant (i.e., the wastewater flow rate that the plant was built to handle). Also provide the average daily flow rate and maximum daily flow rate for each of the last three years. Each year's data must be based on a 12-month time period with the 12th month of "this year" occurring no more than three months prior to this application submittal.

a. Design flow rate 2.40 mgd

	Two Years Ago	Last Year	This Year	
b. Annual average daily flow rate	1.20	1.10	1.20	mgd
c. Maximum daily flow rate	1.30	1.60	1.41	mgd

A.7. Collection System. Indicate the type(s) of collection system(s) used by the treatment plant. Check all that apply. Also estimate the percent contribution (by miles) of each.

✓ Separate sanitary sewer 100.00 %

____ Combined storm and sanitary sewer ____ %

A.8. Discharges and Other Disposal Methods.

a. Does the treatment works discharge effluent to waters of the U.S.? ____ Yes ✓ No

If yes, list how many of each of the following types of discharge points the treatment works uses:

i. Discharges of treated effluent ____

ii. Discharges of untreated or partially treated effluent ____

iii. Combined sewer overflow points ____

iv. Constructed emergency overflows (prior to the headworks) ____

v. Other ____ ____

b. Does the treatment works discharge effluent to basins, ponds, or other surface impoundments that do not have outlets for discharge to waters of the U.S.? ____ Yes ✓ No

If yes, provide the following for each surface impoundment:

Location: ____

Annual average daily volume discharged to surface impoundment(s) ____ mgd

Is discharge ____ continuous or ____ intermittent?

c. Does the treatment works land-apply treated wastewater? ✓ Yes ____ No

If yes, provide the following for each land application site:

Location: 14248 North Huetter Rd, Hayden Id, 83835

Number of acres: 300.00

Annual average daily volume applied to site: 1.20 Mgd

Is land application ____ continuous or ✓ intermittent?

d. Does the treatment works discharge or transport treated or untreated wastewater to another treatment works? ____ Yes ✓ No

If yes, describe the mean(s) by which the wastewater from the treatment works is discharged or transported to the other treatment works (e.g., tank truck, pipe).

If transport is by a party other than the applicant, provide:

Transporter name: N.A.

Mailing Address: N.A.

Contact person: N.A.

Title: N.A.

Telephone number:

For each treatment works that receives this discharge, provide the following:

Name: N.A.

Mailing Address: N.A.

Contact person: N.A.

Title: N.A.

Telephone number:

If known, provide the NPDES permit number of the treatment works that receives this discharge. N.A.

Provide the average daily flow rate from the treatment works into the receiving facility. 0.00 mgd

e. Does the treatment works discharge or dispose of its wastewater in a manner not included in A.8.a through A.8.d above (e.g., underground percolation, well injection)? ____ Yes ✓ No

If yes, provide the following for each disposal method:

Description of method (including location and size of site(s) if applicable):

N.A.

Annual daily volume disposed of by this method: N.A.

Is disposal through this method ____ continuous or ____ intermittent?

FACILITY NAME AND PERMIT NUMBER:
HAYDEN AREA REGIONAL SEWER BOARD ID002659-0

Form Approved 1/14/99
OMB Number 2040-0086

WASTEWATER DISCHARGES:

If you answered "yes" to question A.8.a, complete questions A.9 through A.12 **once for each outfall** (including bypass points) through which effluent is discharged. Do not include information on combined sewer overflows in this section. **If you answered "no" to question A.8.a**, go to Part B, "Additional Application Information for Applicants with a Design Flow Greater than or Equal to 0.1 mgd."

A.9. Description of Outfall.

a. Outfall number 001

b. Location
River mile 108.7, Coeur d'Alene (City or town, if applicable) — 83814 (Zip Code)
KOOTENAI COUNTY (County) — IDAHO (State)
47* 41' 54" (Latitude) — 116* 50' 03" (Longitude)

c. Distance from shore (if applicable) 100.00 ft.

d. Depth below surface (if applicable) 12.00 ft.

e. Average daily flow rate 1.20 mgd

f. Does this outfall have either an intermittent or a periodic discharge? ✓ Yes ____ No (go to A.9.g.)

If yes, provide the following information:

Number of times per year discharge occurs: Daily_>2000_cfs_Oct_1_to_June

Average duration of each discharge: 24_hours

Average flow per discharge: 1.20 mgd

Months in which discharge occurs: June,July,August,September

g. Is outfall equipped with a diffuser? ✓ Yes ____ No

A.10. Description of Receiving Waters.

a. Name of receiving water SPOKANE RIVER

b. Name of watershed (if known) Spokane River Watershd

United States Soil Conservation Service 14-digit watershed code (if known): ?

c. Name of State Management/River Basin (if known): Spokane River Basin

United States Geological Survey 8-digit hydrologic cataloging unit code (if known): ?

d. Critical low flow of receiving stream (if applicable):
acute ____ cfs chronic ____ cfs

e. Total hardness of receiving stream at critical low flow (if applicable): 17.00 mg/l of $CaCO_3$

FACILITY NAME AND PERMIT NUMBER:
HAYDEN AREA REGIONAL SEWER BOARD ID002659-0

Form Approved 1/14/99
OMB Number 2040-0086

A.11. Description of Treatment.

a. What levels of treatment are provided? Check all that apply.

____ Primary ✓ Secondary

____ Advanced ____ Other. Describe: ____

b. Indicate the following removal rates (as applicable):

Design BOD_5 removal or Design $CBOD_5$ removal	85.00	%
Design SS removal	85.00	%
Design P removal	0.00	%
Design N removal	0.00	%
Other ____		%

c. What type of disinfection is used for the effluent from this outfall? If disinfection varies by season, please describe.

CHLORINATION

If disinfection is by chlorination, is dechlorination used for this outfall? ✓ Yes ____ No

d. Does the treatment plant have post aeration? ____ Yes ✓ No

A.12. Effluent Testing Information. All Applicants that discharge to waters of the US must provide effluent testing data for the following parameters. Provide the indicated effluent testing required by the permitting authority for each outfall through which effluent is discharged. Do not include information on combined sewer overflows in this section. All information reported must be based on data collected through analysis conducted using 40 CFR Part 136 methods. In addition, this data must comply with QA/QC requirements of 40 CFR Part 136 and other appropriate QA/QC requirements for standard methods for analytes not addressed by 40 CFR Part 136. At a minimum, effluent testing data must be based on at least three samples and must be no more than four and one-half years apart.

Outfall number: ____

PARAMETER	MAXIMUM DAILY VALUE		AVERAGE DAILY VALUE		
	Value	Units	Value	Units	Number of Samples
pH (Minimum)		s.u.			
pH (Maximum)		s.u.			
Flow Rate					
Temperature (Winter)					
Temperature (Summer)					

* For pH please report a minimum and a maximum daily value

POLLUTANT		MAXIMUM DAILY DISCHARGE		AVERAGE DAILY DISCHARGE			ANALYTICAL METHOD	ML / MDL
		Conc.	Units	Conc.	Units	Number of Samples		
CONVENTIONAL AND NONCONVENTIONAL COMPOUNDS.								
BIOCHEMICAL OXYGEN	BOD-5							
DEMAND (Report one)	CBOD-5							
FECAL COLIFORM								
TOTAL SUSPENDED SOLIDS (TSS)								

END OF PART A.
REFER TO THE APPLICATION OVERVIEW TO DETERMINE WHICH OTHER PARTS OF FORM 2A YOU MUST COMPLETE

BASIC APPLICATION INFORMATION

PART B. ADDITIONAL APPLICATION INFORMATION FOR APPLICANTS WITH A DESIGN FLOW GREATER THAN OR EQUAL TO 0.1 MGD (100,000 gallons per day).

All applicants with a design flow rate ≥ 0.1 mgd must answer questions B.1 through B.6. All others go to Part C (Certification).

B.1. Inflow and Infiltration. Estimate the average number of gallons per day that flow into the treatment works from inflow and/or infiltration.

10,000.00 gpd

Briefly explain any steps underway or planned to minimize inflow and infiltration.

Collection system inspections locate infiltration and repair are made to stop the inflow.

B.2. Topographic Map. Attach to this application a topographic map of the area extending at least one mile beyond facility property boundaries. This map must show the outline of the facility and the following information. (You may submit more than one map if one map does not show the entire area.)

a. The area surrounding the treatment plant, including all unit processes.

b. The major pipes or other structures through which wastewater enters the treatment works and the pipes or other structures through which treated wastewater is discharged from the treatment plant. Include outfalls from bypass piping, if applicable.

c. Each well where wastewater from the treatment plant is injected underground.

d. Wells, springs, other surface water bodies, and drinking water wells that are: 1) within 1/4 mile of the property boundaries of the treatment works, and 2) listed in public record or otherwise known to the applicant.

e. Any areas where the sewage sludge produced by the treatment works is stored, treated, or disposed.

f. If the treatment works receives waste that is classified as hazardous under the Resource Conservation and Recovery Act (RCRA) by truck, rail, or special pipe, show on the map where that hazardous waste enters the treatment works and where it is treated, stored, and/or disposed.

B.3. Process Flow Diagram or Schematic. Provide a diagram showing the processes of the treatment plant, including all bypass piping and all backup power sources or redundancy in the system. Also provide a water balance showing all treatment units, including disinfection (e.g, chlorination and dechlorination). The water balance must show daily average flow rates at influent and discharge points and approximate daily flow rates between treatment units. Include a brief narrative description of the diagram.

B.4. Operation/Maintenance Performed by Contractor(s).

Are any operational or maintenance aspects (related to wastewater treatment and effluent quality) of the treatment works the responsibility of a contractor? ____Yes ✓ No

If yes, list the name, address, telephone number, and status of each contractor and describe the contractor's responsibilities (attach additional pages if necessary).

Name: _____

Mailing Address: _____

_____

Telephone Number: _____

Responsibilities of Contractor: _____

B.5. Scheduled Improvements and Schedules of Implementation. Provide information on any uncompleted implementation schedule or uncompleted plans for improvements that will affect the wastewater treatment, effluent quality, or design capacity of the treatment works. If the treatment works has several different implementation schedules or is planning several improvements, submit separate responses to question B.5 for each. (If none, go to question B.6.)

a. List the outfall number (assigned in question A.9) for each outfall that is covered by this implementation schedule.

_____

b. Indicate whether the planned improvements or implementation schedule are required by local, State, or Federal agencies.

____Yes ✓ No

c If the answer to B.5.b is "Yes," briefly describe, including new maximum daily inflow rate (if applicable).

_____

d. Provide dates imposed by any compliance schedule or any actual dates of completion for the implementation steps listed below, as applicable. For improvements planned independently of local, State, or Federal agencies, indicate planned or actual completion dates, as applicable. Indicate dates as accurately as possible.

Implementation Stage	Schedule MM / DD / YYYY	Actual Completion MM / DD / YYYY
– Begin construction	___/___/_____	___/___/_____
– End construction	___/___/_____	___/___/_____
– Begin discharge	___/___/_____	___/___/_____
– Attain operational level	___/___/_____	___/___/_____

e. Have appropriate permits/clearances concerning other Federal/State requirements been obtained? ____Yes ____No

Describe briefly: _____

_____

B.6. EFFLUENT TESTING DATA (GREATER THAN O.1 MGD ONLY).

Applicants that discharge to waters of the US must provide effluent testing data for the following parameters. Provide the indicated effluent testing required by the permitting authority for each outfall through which effluent is discharged. Do not include information on combined sewer overflows in this section. All information reported must be based on data collected through analysis conducted using 40 CFR Part 136 methods. In addition, this data must comply with QA/QC requirements of 40 CFR Part 136 and other appropriate QA/QC requirements for standard methods for analytes not addressed by 40 CFR Part 136. At a minimum, effluent testing data must be based on at least three pollutant scans and must be no more than four and one-half years old.

Outfall Number:_____

POLLUTANT	MAXIMUM DAILY DISCHARGE		AVERAGE DAILY DISCHARGE			ANALYTICAL METHOD	ML / MDL
	Conc.	Units	Conc.	Units	Number of Samples		
CONVENTIONAL AND NONCONVENTIONAL COMPOUNDS.							
AMMONIA (as N)							
CHLORINE (TOTAL RESIDUAL, TRC)							
DISSOLVED OXYGEN							
TOTAL KJELDAHL NITROGEN (TKN)							
NITRATE PLUS NITRITE NITROGEN							
OIL and GREASE							
PHOSPHORUS (Total)							
TOTAL DISSOLVED SOLIDS (TDS)							
OTHER							

END OF PART B.
REFER TO THE APPLICATION OVERVIEW TO DETERMINE WHICH OTHER PARTS OF FORM 2A YOU MUST COMPLETE

FACILITY NAME AND PERMIT NUMBER:

HAYDEN AREA REGIONAL SEWER BOARD ID002659-0

Form Approved 1/14/99
OMB Number 2040-0086

BASIC APPLICATION INFORMATION

PART C. CERTIFICATION

All applicants must complete the Certification Section. Refer to instructions to determine who is an officer for the purposes of this certification. All applicants must complete all applicable sections of Form 2A, as explained in the Application Overview. Indicate below which parts of Form 2A you have completed and are submitting. By signing this certification statement, applicants confirm that they have reviewed Form 2A and have completed all sections that apply to the facility for which this application is submitted.

Indicate which parts of Form 2A you have completed and are submitting:

✓ Basic Application Information packet

Supplemental Application Information packet:

_____ Part D (Expanded Effluent Testing Data)

_____ Part E (Toxicity Testing: Biomonitoring Data)

_____ Part F (Industrial User Discharges and RCRA/CERCLA Wastes)

_____ Part G (Combined Sewer Systems)

ALL APPLICANTS MUST COMPLETE THE FOLLOWING CERTIFICATION.

I certify under penalty of law that this document and all attachments were prepared under my direction or supervision in accordance with a system designed to assure that qualified personnel properly gather and evaluate the information submitted. Based on my inquiry of the person or persons who manage the system or those persons directly responsible for gathering the information, the information is, to the best of my knowledge and belief, true, accurate, and complete. I am aware that there are significant penalties for submitting false information, including the possibility of fine and imprisonment for knowing violations.

Name and official title: Ken Windram, Manager, Hayden Area Regional Sewer Board

Signature: [signature]

Telephone number: (208) 772-0672

Date signed: 5/28/10

Upon request of the permitting authority, you must submit any other information necessary to assess wastewater treatment practices at the treatment works or identify appropriate permitting requirements.

SEND COMPLETED FORMS TO:

Send To Printer Back To MSR Maps Change to 11x17 Print Size Show Grid Lines Change to Landscape

USGS 2 km N of Dalton Gardens, Idaho, United States 01 Jul 1987

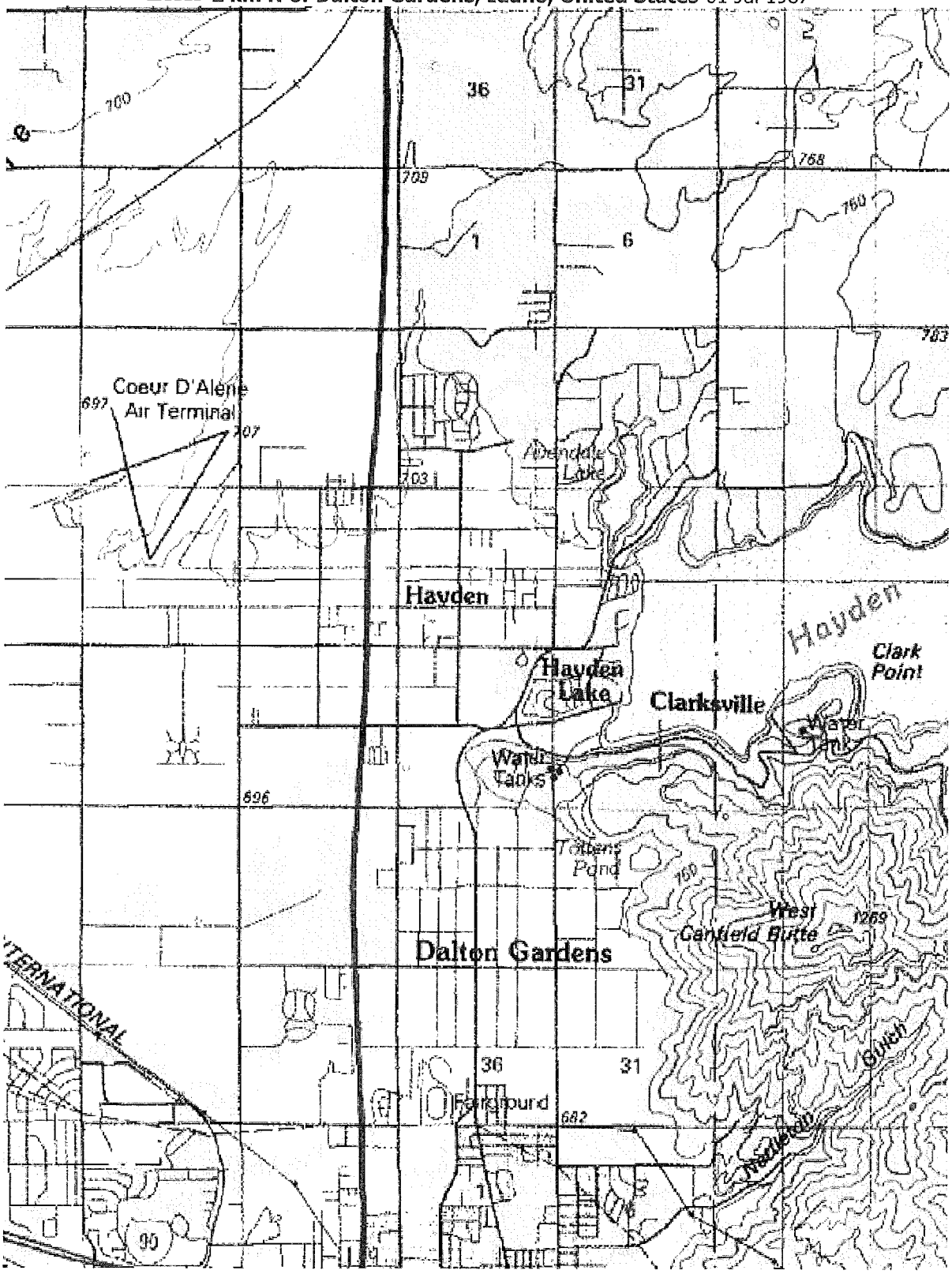

km 0.5 1 1.5 2
mi

Image courtesy of the U.S. Geological Survey

© 2010 Microsoft Corporation. Terms of Use Privacy Statement

F:\Projects\20-07-016 HARSB Phase 3 WWTP\-00 DESIGN\dwg\RECORD\20-07-016_GENERAL-REC.dwg, G4, 3/20/2009 10:47:22 AM, bberger, J-U-B CDA Office

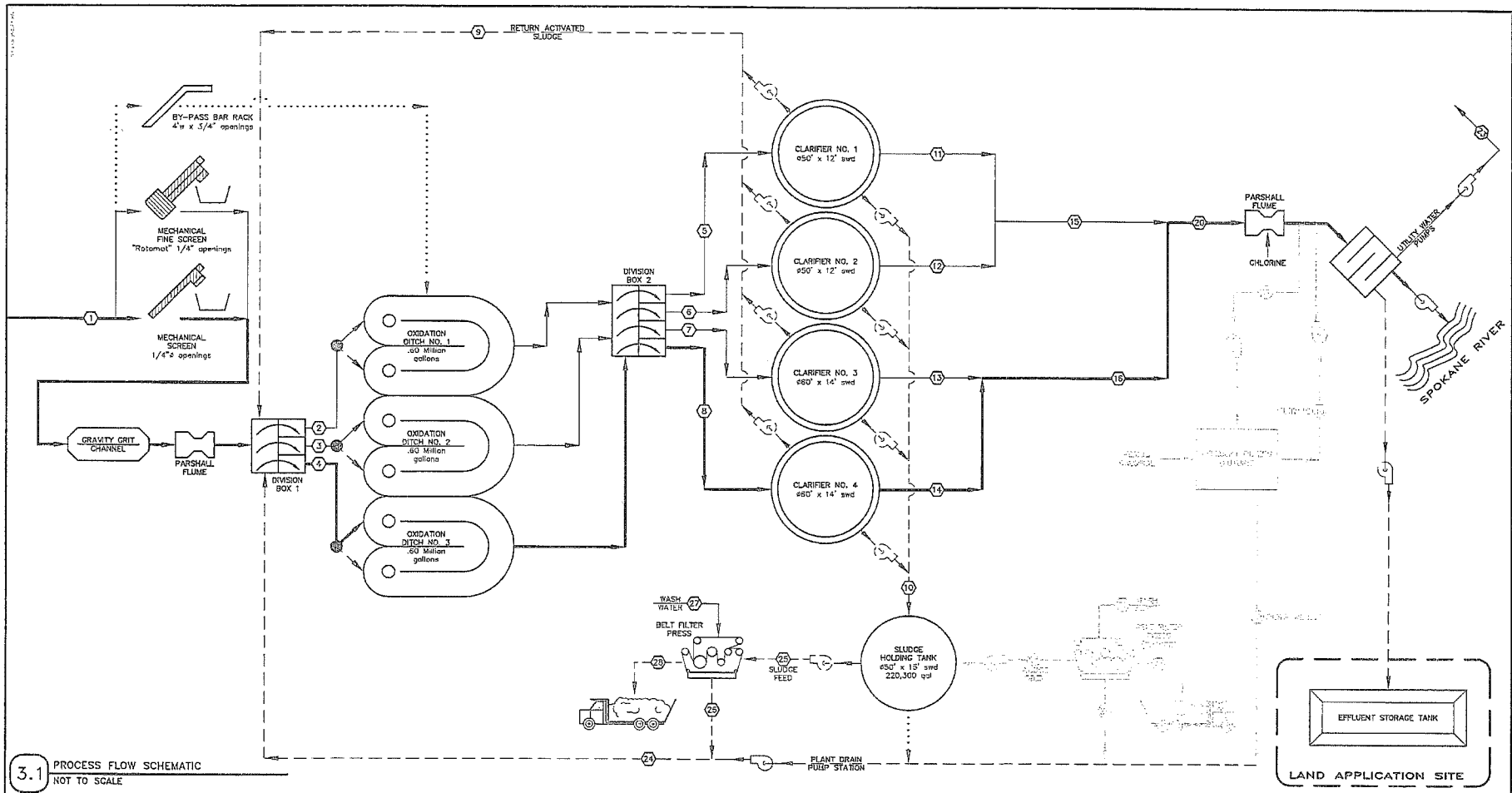

3.1 PROCESS FLOW SCHEMATIC
NOT TO SCALE

NUMBER	FLOW STREAM IDENTIFICATION	FLOW, mgd	
		AVERAGE	PEAK
1	INFLUENT	2.400	5.520
2	OXIDATION DITCH NO. 1 INFLUENT	1.919	2.795
3	OXIDATION DITCH NO. 2 INFLUENT	1.919	2.795
4	OXIDATION DITCH NO. 3 INFLUENT	1.919	2.795
5	CLARIFIER NO. 1 INFLUENT	1.674	2.438
6	CLARIFIER NO. 2 INFLUENT	1.674	2.438
7	CLARIFIER NO. 3 INFLUENT	0	0
8	CLARIFIER NO. 4 INFLUENT	2.410	3.511
9	RETURN ACTIVATED SLUDGE	1.440	2.400
10	WASTE ACTIVATED SLUDGE	0.036	0.036
11	CLARIFIER NO. 1 EFFLUENT	0.966	2.009

NUMBER	FLOW STREAM IDENTIFICATION	FLOW, mgd	
		AVERAGE	PEAK
12	CLARIFIER NO. 2 EFFLUENT	0.966	2.009
13	CLARIFIER NO. 3 EFFLUENT	0	0
14	CLARIFIER NO. 4 EFFLUENT	1.391	2.893
15	CLARIFIERS NO. 1 & 2 COMBINED FLOW	1.931	4.017
16	CLARIFIERS 3 & 4 COMBINED FLOW	1.391	2.893
17	EFFLUENT FILTER FEED	---	---
18	SAND FILTER FILTRATE	---	---
19	SAND FILTER REJECT (FUTURE)	0.360	0.828
20	CLARIFIER EFFLUENT	---	---
21	NOT USED	---	---
22	NOT USED	---	---
23	UTILITY WATER	---	---
24	PLANT DRAIN (FUTURE FLOW RATE)	0.958	1.426

NUMBER	FLOW STREAM IDENTIFICATION	FLOW, mgd	
		AVERAGE	PEAK
25	BELT FILTER PRESS SLUDGE FEED (150 gpm)	---	---
26	BELT FILTER PRESS FILTRATE (1+1 FUTURE)	0.299	0.299
27	BELT FILTER PRESS WASH WATER (73 + 73 gpm)	0.210	---
28	BELT FILTER PRESS DEWATERED SLUDGE	0.022	---
29	NOT USED	---	---
30	NOT USED	---	---
31	NOT USED	---	---

4.1 KEYED NOTES
NOT TO SCALE

NOTE:

1. THE HYDRAULIC PROFILE IS MADE ON THE FLOW PATH IDENTIFIED BY THE HEAVY CONTINUOUS LINE.
2. CLARIFIER NO. 3 IS ASSUMED TO BE OUT OF SERVICE.

LEGEND

- MAIN PLANT FLOW
- SIDE STREAM
- BY-PASS
- (12) FLOW STREAM IDENTIFICATION

RECORD DRAWING CERTIFICATIONS

These Record Drawings represent the locations of improvements based on field observations made during construction and from information provided by others.

J-U-B Engineers • Surveyors • Planners

J-U-B ENGINEERS, Inc.
7825 Meadowlark Way
Coeur d'Alene, Idaho 83815
Phone: 208.762.8787
Fax: 208.762.9797
www.jub.com

RECORD
PROFESSIONAL ENGINEER REGISTERED STATE OF IDAHO SCOTT TIMOTHY JOHNSON
RECORD

NO.	REVISION	BY	CHK	DATE
	RECORD DRAWINGS	LJB	TSK	3.10.09

REUSE OF DRAWINGS
THIS DOCUMENT, AND THE IDEAS AND DESIGNS INCORPORATED HEREIN, AS AN INSTRUMENT OF PROFESSIONAL SERVICE, IS THE PROPERTY OF J-U-B ENGINEERS, INC. AND SHALL NOT BE REUSED IN WHOLE OR PART, FOR ANY OTHER PROJECT WITHOUT THE EXPRESS WRITTEN AUTHORIZATION OF J-U-B ENGINEERS, INC.

PHASE IIIC WWTP EXPANSION
HAYDEN AREA REGIONAL SEWER BOARD

PROCESS FLOW SCHEMATIC

CAD FILE: 20-07-016_GENERAL-REC
PROJ. #: 20-07-016
DRAWING NO.: G03R307
DRAWN BY: BBB
DESIGNED: RTK
CHECKED BY:
ONE INCH
AT FULL SIZE, IF NOT ONE INCH, SCALE ACCORDINGLY
SCALE OF SHEET
HOR. SCALE: AS SHOWN
VER. SCALE: NONE
LAST UPDATED: 3/10/09
DRAWING: G4-R
SHEET: 4 OF 93