CITY OF POST FALLS

Water Reclamation Facility

The Post Falls Water Reclamation Facility is owned and operated by the City of Post Falls. It treats wastewater from the City of Post Falls and the City of Rathdrum. The flows are metered separately then combined for treatment.

The treatment process used is an advanced biological secondary process. The facility is designed to remove BOD, suspended solids, ammonia, and phosphorus and to partially remove nitrogen.

The wastewater is screened and degritted then divided between two parallel biological treatment trains. The first train has a common anaerobic selector, four parallel oxidation ditches (1 through 4) and five parallel secondary clarifiers (1 through 5). The second train has two parallel anaerobic selector/anoxic selector/oxidation ditches (5 and 6) and two parallel secondary clarifiers (6 and 7). The clarified water from the treatment trains is recombined for disinfection with ultraviolet light. A chlorination-dechlorination system provides backup and redundancy to the ultraviolet light system. The treated and disinfected water is discharged to the Spokane River.

Residual biosolids are dewatered and then composted off-site.

Diesel generators provide a back-up power supply for the entire facility.

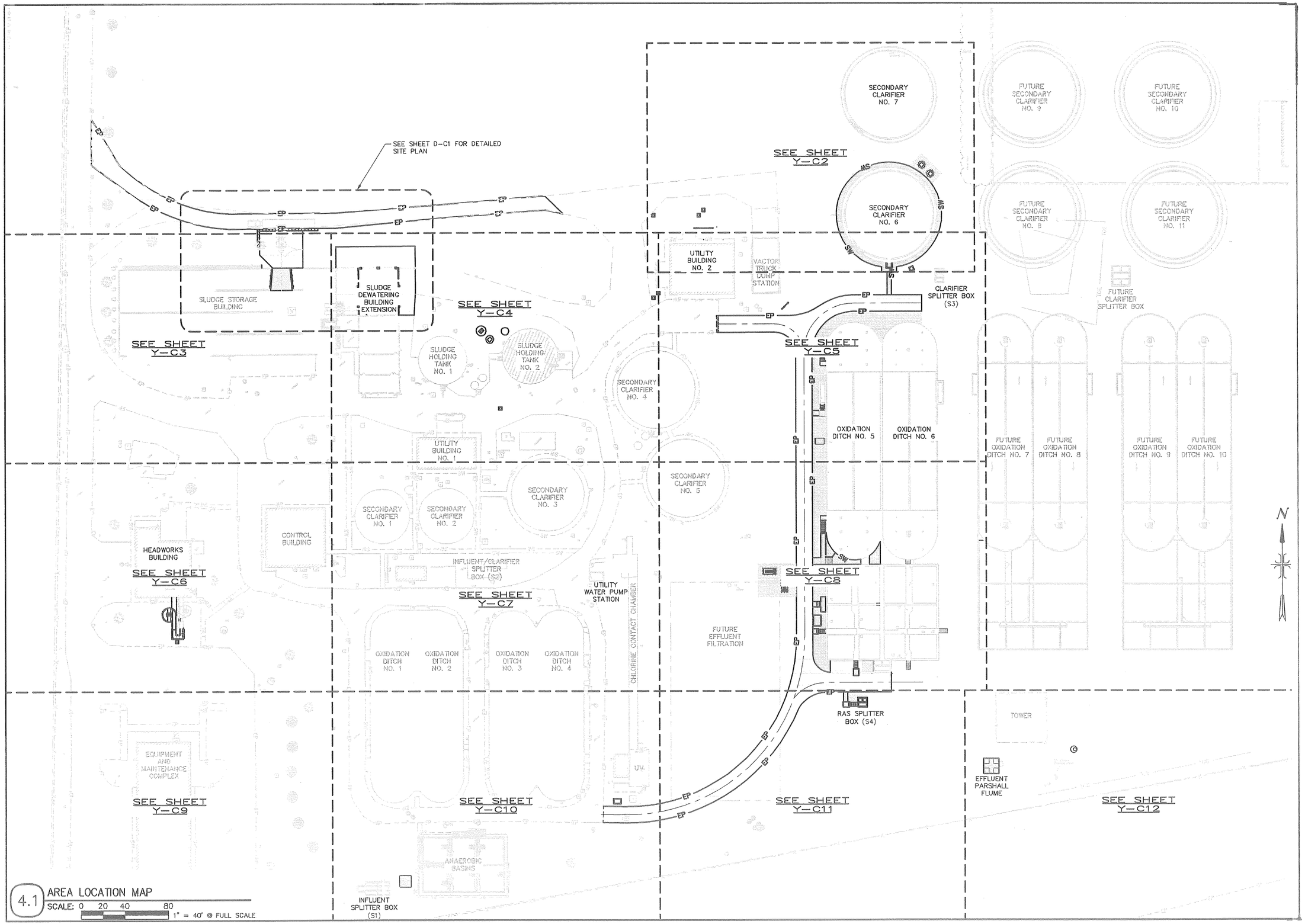
SEE SHEET D-C1 FOR DETAILED SITE PLAN
SLUDGE STORAGE BUILDING
SLUDGE DEWATERING BUILDING EXTENSION
SEE SHEET Y-C3
SEE SHEET Y-C4
SLUDGE HOLDING TANK NO. 1
SLUDGE HOLDING TANK NO. 2
UTILITY BUILDING NO. 1
SECONDARY CLARIFIER NO. 1
SECONDARY CLARIFIER NO. 2
SECONDARY CLARIFIER NO. 3
SECONDARY CLARIFIER NO. 4
SECONDARY CLARIFIER NO. 5
SECONDARY CLARIFIER NO. 6
SECONDARY CLARIFIER NO. 7
FUTURE SECONDARY CLARIFIER NO. 8
FUTURE SECONDARY CLARIFIER NO. 9
FUTURE SECONDARY CLARIFIER NO. 10
FUTURE SECONDARY CLARIFIER NO. 11
SEE SHEET Y-C2
UTILITY BUILDING NO. 2
VACTOR TRUCK DUMP STATION
CLARIFIER SPLITTER BOX (S3)
FUTURE CLARIFIER SPLITTER BOX
SEE SHEET Y-C5
OXIDATION DITCH NO. 5
OXIDATION DITCH NO. 6
FUTURE OXIDATION DITCH NO. 7
FUTURE OXIDATION DITCH NO. 8
FUTURE OXIDATION DITCH NO. 9
FUTURE OXIDATION DITCH NO. 10
HEADWORKS BUILDING
SEE SHEET Y-C6
CONTROL BUILDING
INFLUENT/CLARIFIER SPLITTER BOX (S2)
SEE SHEET Y-C7
UTILITY WATER PUMP STATION
CHLORINE CONTACT CHAMBER
OXIDATION DITCH NO. 1
OXIDATION DITCH NO. 2
OXIDATION DITCH NO. 3
OXIDATION DITCH NO. 4
FUTURE EFFLUENT FILTRATION
SEE SHEET Y-C8
RAS SPLITTER BOX (S4)
TOWER
EFFLUENT PARSHALL FLUME
EQUIPMENT AND MAINTENANCE COMPLEX
SEE SHEET Y-C9
SEE SHEET Y-C10
UV
SEE SHEET Y-C11
SEE SHEET Y-C12
ANAEROBIC BASINS
INFLUENT SPLITTER BOX (S1)
N
4.1 AREA LOCATION MAP
SCALE: 0 20 40 80
1" = 40' @ FULL SCALE

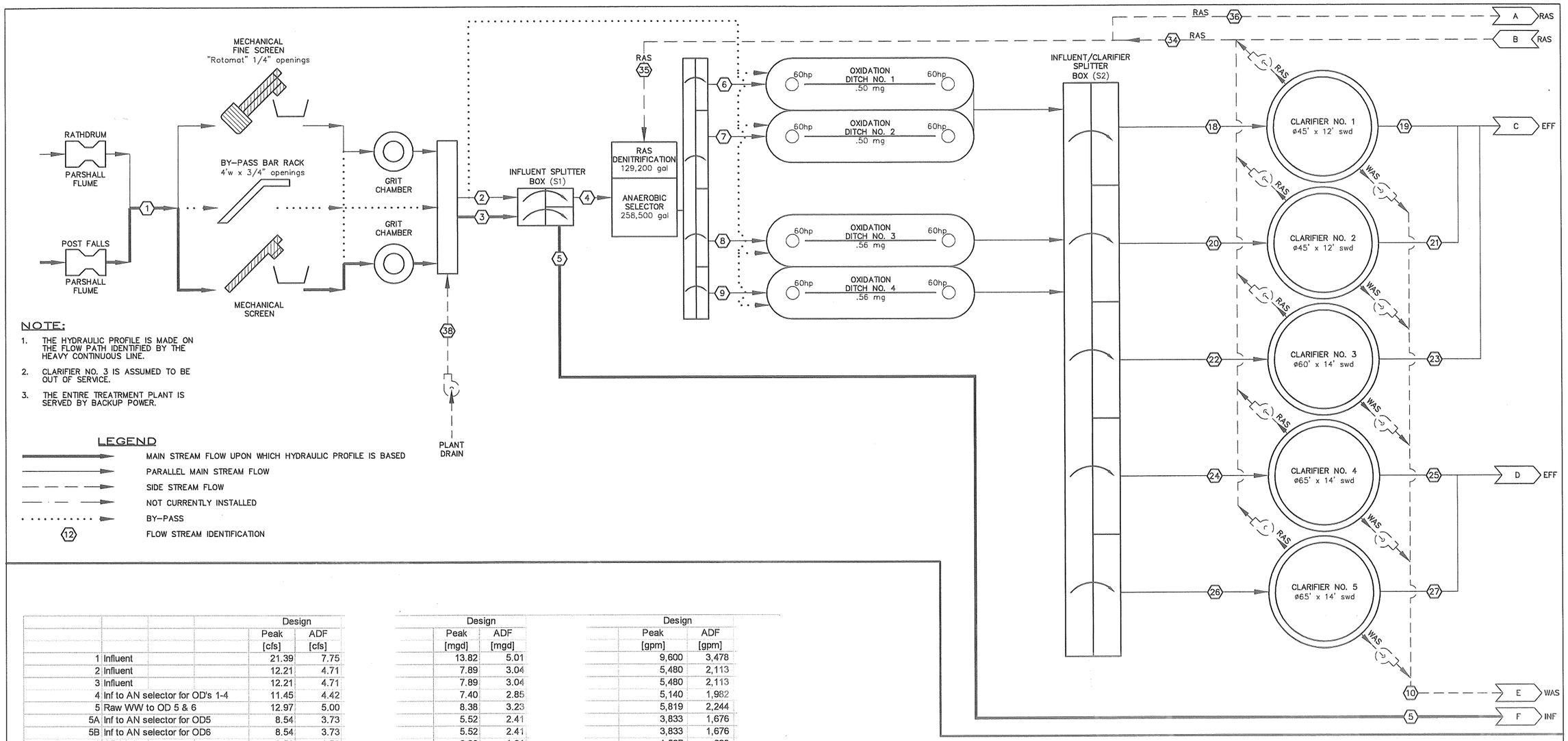

NOTE:

1. THE HYDRAULIC PROFILE IS MADE ON THE FLOW PATH IDENTIFIED BY THE HEAVY CONTINUOUS LINE.
2. CLARIFIER NO. 3 IS ASSUMED TO BE OUT OF SERVICE.
3. THE ENTIRE TREATRMENT PLANT IS SERVED BY BACKUP POWER.

LEGEND

- MAIN STREAM FLOW UPON WHICH HYDRAULIC PROFILE IS BASED
- PARALLEL MAIN STREAM FLOW
- SIDE STREAM FLOW
- NOT CURRENTLY INSTALLED
- BY-PASS
- (12) FLOW STREAM IDENTIFICATION

		Design		Design		Design									
		Peak [cfs]	ADF [cfs]	Peak [mgd]	ADF [mgd]	Peak [gpm]	ADF [gpm]								
1	Influent	21.39	7.75	13.82	5.01	9,600	3,478	24	SC4 inf	5.29	2.31	3.42	1.49	2,374	1,038
2	Influent	12.21	4.71	7.89	3.04	5,480	2,113	25	SC4 eff	4.02	1.55	2.60	1.00	1,802	695
3	Influent	12.21	4.71	7.89	3.04	5,480	2,113	26	SC5 inf	5.29	2.31	3.42	1.49	2,374	1,038
4	Inf to AN selector for OD's 1-4	11.45	4.42	7.40	2.85	5,140	1,982	27	SC5 eff	4.02	1.55	2.60	1.00	1,802	695
5	Raw WW to OD 5 & 6	12.97	5.00	8.38	3.23	5,819	2,244	28	SC6 inf	8.54	3.73	5.52	2.41	3,833	1,676
5A	Inf to AN selector for OD5	8.54	3.73	5.52	2.41	3,833	1,676	29	SC6 eff	6.48	2.50	4.19	1.62	2,910	1,122
5B	Inf to AN selector for OD6	8.54	3.73	5.52	2.41	3,833	1,676	30	SC7 inf	8.54	3.73	5.52	2.41	3,833	1,676
6	OD1 inf	3.56	1.56	2.30	1.01	1,597	698	31	SC7 eff	6.48	2.50	4.19	1.62	2,910	1,122
7	OD2 inf	3.56	1.56	2.30	1.01	1,597	698	32	SC6 and SC7 eff	12.97	5.00	8.38	3.23	5,819	2,244
8	OD3 inf	3.99	1.74	2.58	1.13	1,789	782	33	Final Treated Effluent	21.39	7.75	13.82	5.01	9,600	3,478
9	OD4 inf	3.99	1.74	2.58	1.13	1,789	782	34	Total RAS	7.75	4.65	5.01	3.01	3,478	2,087
10	Inf to AO selector for OD5	8.54	3.73	5.52	2.41	3,833	1,676	35	RAS to AN selector for OD's 1-4	3.63	2.18	2.35	1.41	1,631	979
11	AO recycle	8.23	2.06	5.32	1.33	3,694	923	36	RAS to AN selector for OD's 5-6	4.12	2.47	2.66	1.60	1,847	1,108
12	OD5 Inf	16.77	5.79	10.84	3.74	7,527	2,599	37	Effluent filter backwash	2.14	0.78	1.38	0.50	960	348
13	OD5 outlet	8.54	3.73	5.52	2.41	3,833	1,676	38	Plant Drain	3.03	1.67	1.96	1.08	1,359	747
14	Inf to AO selector for OD6	8.54	3.73	5.52	2.41	3,833	1,676	39	Total WAS	0.20	0.20	0.13	0.13	90	90
15	AO recycle	8.23	2.06	5.32	1.33	3,694	923								
16	OD6 Inf	16.77	5.79	10.84	3.74	7,527	2,599								
17	OD6 outlet	8.54	3.73	5.52	2.41	3,833	1,676								
18	SC1 inf	0.00	0.00	0.00	0.00	-	-								
19	SC1 eff	0.00	0.00	0.00	0.00	-	-								
20	SC2 inf	0.00	0.00	0.00	0.00	-	-								
21	SC2 eff	0.00	0.00	0.00	0.00	-	-								
22	SC3 inf	4.51	1.97	2.91	1.27	2,023	885								
23	SC3 eff	3.42	1.32	2.21	0.85	1,536	592								

CITY OF POSTFALLS

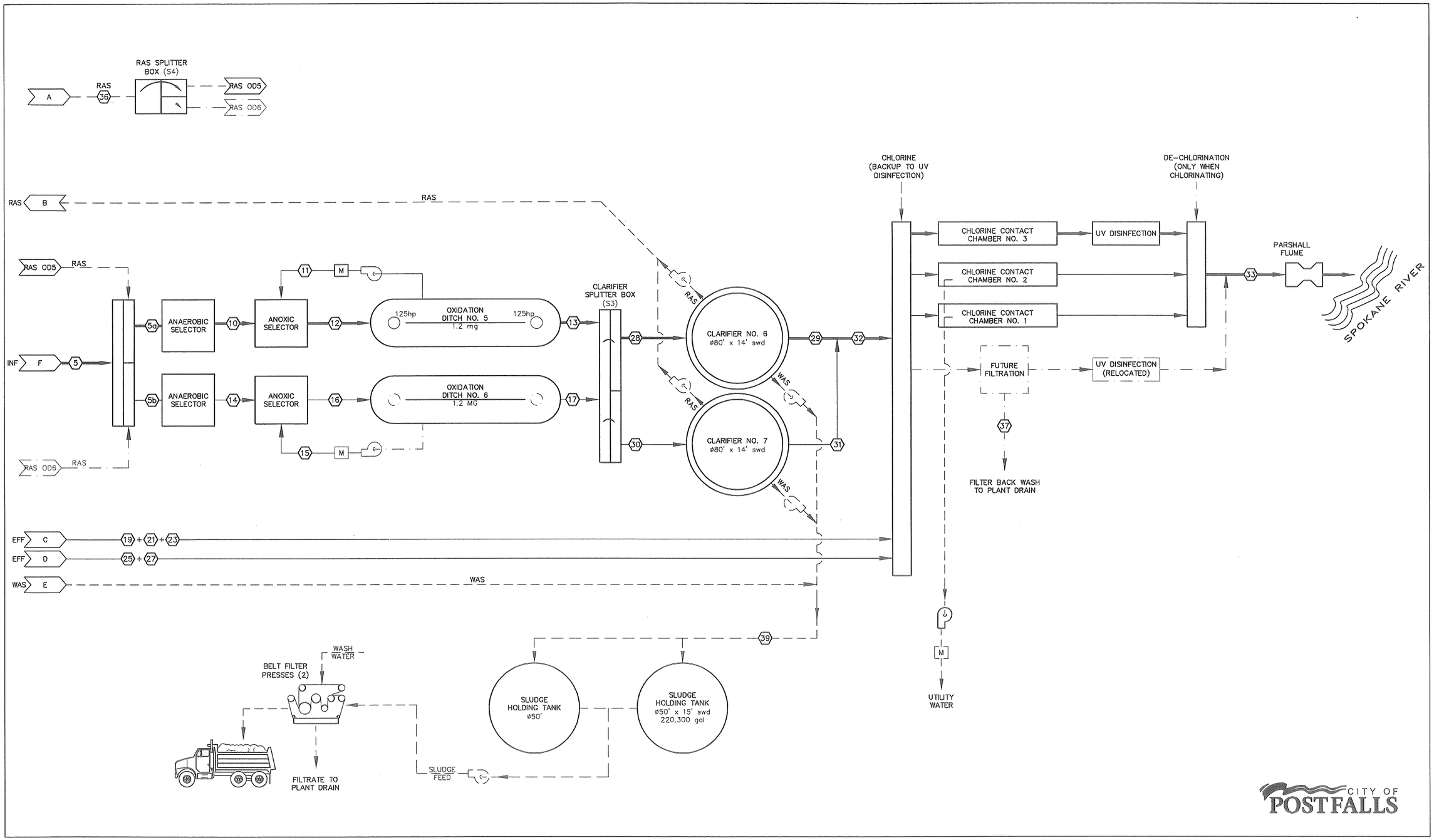

CITY OF POSTFALLS