Re: Revised Meeting Date—Insulfab Plastics Inc. - In The Matter Of Berry's Creek

Clay Monroe to: Joe Alessi 07/06/2010 12:46 PM
Cc: "Angelo C. Morresi", "Jay Hanus"

90 day extension is fine. I'm willing to meet, but I'm not sure it's really necessary. Even if your arguments are convincing, the Agency wouldn't take any action, we simply would no longer consider Insulfab a potentially responsible party. We don't normally retract notice letters or do anything further. But if you think a meeting would be worthwhile, I am available that week.

"Joe Alessi"	Dear Mr. Monroe:	07/02/2010 10:36:31 AM

From: "Joe Alessi" <jalessi@alessilaw.com>
To: Clay Monroe/R2/USEPA/US@EPA
Cc: "Jay Hanus" <Jay@insulfab.com>, <JHanson@bdlaw.com>, "Angelo C. Morresi" <amorresi@aol.com>
Date: 07/02/2010 10:36 AM
Subject: Revised Meeting Date—Insulfab Plastics Inc. - In The Matter Of Berry's Creek

Dear Mr. Monroe:

Please see revised attached letter stating that we would like to schedule a meeting with you during the week of **July 26, 2010** at your offices.

Thank you for your continued cooperation.

Joseph H. Alessi

Joseph H. Alessi LLC
Counselor at Law

10 SOUTH PROSPECT STREET
VERONA, NEW JERSEY 07044
TELEPHONE: (973) 571-9227
FAX: (973) 239-7120
E-mail: jalessi@alessilaw.com

[attachment "REVISEDMonroe letter July 2, 2010.doc" deleted by Clay Monroe/R2/USEPA/US]

318152

BERRY'S CREEK STUDY AREA

NEXUS PACKAGE FOR INSULFAB PLASTICS, INC.

PRP DATA EXTRACTION FORM AND SUPPORTING DOCUMENTS

PREPARED ON BEHALF OF THE
BERRY'S CREEK STUDY AREA COOPERATING PRP GROUP

SUBMITTED TO USEPA REGION II

July 31, 2009

BERRY'S CREEK STUDY AREA
PRP DATA EXTRACTION FORM

INSULFAB PLASTICS, INC.

EXECUTIVE SUMMARY:

Insulfab Plastics, Inc. ("Insulfab") operated a plastics fabricating and machining facility in East Rutherford, New Jersey (the "Site") from at least 1952 until 1998. Starting in 1952 and continuing until 1988, the Site discharged wastewater to the Rutherford-East Rutherford-Carlstadt Joint Meeting ("Joint Meeting"), which discharged effluent to Berry's Creek. For the first 28 years of Insulfab's operations, this discharge was not covered by a federal permit. The Joint Meeting had a long history of inadequately treating industrial wastewater and bypassing waste to Berry's Creek. Insulfab was identified in 1974 as being one of the largest industrial contributors to the Joint Meeting, discharging 13,000 gallons per day of effluent. This effluent, reported to be generated by an air conditioning system installed in the mid-1960s, would almost certainly have contained common cooling water additives made up of hazardous substances, including chromates and other heavy metals. Heavy metals are contaminants of concern in the Berry's Creek Study Area. Additionally, Insulfab's industrial solid waste would almost certainly have been disposed of at either Lyndhurst or Rutherford Landfill, both of which discharged leachate containing CERCLA-listed hazardous substances to Berry's Creek. Insulfab's plant waste is reported to have contained waste machine coolant, waste machine oil, solvents (including carbon tetrachloride), ink- or solvent-contaminated rags and cans and plastic powder.

CURRENT MAILING ADDRESS/CONTACT INFORMATION:

Frank J. Hanus, III, Owner
Insulfab Plastics, Inc.
834 Hayne Street
Spartanburg, SC 29301

See, Lexis Dossier – Insulfab Plastics, 2009, Attachment 1 (BCSA0314786).

FACILITY ADDRESSES:

150 Union Ave.
East Rutherford, NJ 07073
Block 77, Lot 3

A map of the Site depicting various features including proximity to the Berry's Creek Study Area, as well as a street-level map of the Site are attached.

See, Industrial Pretreatment Waste Survey, 1988, Attachment 2 (BCSA0311095); Insulfab Plastics Site Map 1, Attachment 3; Insulfab Plastics Site Map 2, Attachment 4.

FINANCIAL VIABILITY (annual revenue, # of employees):

Insulfab's business began in 1918 as a tool-and-die shop in New York. In the 1940s, the company, then known as Insulating Fabricators of New Jersey, New England and South Carolina, opened a facility in Boston and sometime thereafter moved its main operations to East Rutherford. By 1952, the company was operating at the Site as Insulating Fabricators, Inc. and in 1973 changed its name to Insulfab Plastics, Inc. Insulfab had 115 employees and $8.1 million in net sales for 2008.

See, Lexis Dossier – Insulfab Plastics, 2009, Attachment 1 (BCSA0314786); NJ Industrial Directory – E. Rutherford – (1952-53), Attachment 5 (BCSA0068814); E. Rutherford Board of Health Minutes, 1952, Attachment 6 (BCSA0074099); Spartanburg Herald Article, 8-16-1998, Attachment 7 (BCSA0314784); NJ Industrial Directory – E. Rutherford, 1973, Attachment 8 (BCSA0140275).

DATES OF OPERATION (include info. on predecessors/successors if known):

Insulfab machined plastic at the Site from at least 1952 until 1991; a small office of 3 employees was still in existence at the Site as of 1998.

See, NJ Industrial Directory – E. Rutherford, 1952-53, Attachment 5 (BCSA0068814); Spartanburg Herald Article, 8-16-1998, Attachment 7 (BCSA0314784); NJ Industrial Directory – E. Rutherford, 1998, Attachment 9 (BCSA0274600).

DESCRIPTION OF FACILITY OPERATIONS (list CERCLA hazardous substances used, manufactured or present):

In the early 1970s, Insulfab's SIC code was reported as 3079, which was encompassed within the plastics processing industry. Insulfab's operations in 1973 were described as "thermoset and thermolaminate plastics."

In 1991, industrial directories list their SIC codes as 3081 through 3089, which includes Plastic Film & Sheets, Plastic Profile Shapes, Laminated Plastic Plate, Sheet & Profile Shapes, Plastic Pipe, Plastic Bottles, Plastic Foam Products, Custom Compounding of Purchased Plastic Resins, Plastic Plumbing Fixtures and Plastic Products Not

Elsewhere Classified. They are also listed with SIC code 3432 – Plumbing Fixture Fittings & Trim.

Operations at Insulfab's Spartanburg, NC facility in 1998 included "precision saw cutting, lathe turning, drilling, boring, shaping, contouring, thermoplastic welding and other types of machining and punching" as well as fabrication of composite resins, cloth, hybrid thermoplastic materials and glass. Former employees describe operations as plastics machining, wherein plastic was machined and formed into a variety of plastic parts. They report that Insulfab did not engage in any plastics compounding or formation. Insulfab's operations were similar to that of a "job shop," where customers placed orders for plastic parts which were then machined according to blueprint specifications. Three former employees recalled carbon tetrachloride being used as a cleaning solvent and four former employees remembered the plant using machine coolant. One former employee also reported that waste oil was generated from machining operations and collected in drums. Other materials used onsite included paint for maintenance work and ink for some product stamping.

See, Spartanburg Herald Article, 08-16-1998, Attachment 7 (BCSA0314783); NJ Industrial Directory – E. Rutherford, 1973, Attachment 8 (BCSA0140275); NJ Industrial Directory – E. Rutherford, 1998, Attachment 9 (BCSA0274600); SIC Codes, 2009, Attachment 10 (BCSA0314761, BCSA0314763); NJ Industrial Directory – E Rutherford – (1991), Attachment 11 (BCSA0274590); Insulfab Employee Interview Summaries, Attachment 12 (BCSA0315983-90).

Former employees recall that there was significant discharge from the plant's air conditioning system into the sewer. In 1974, Insulfab was one of the largest industrial contributors to the Joint Meeting, discharging 13,000 gallons per day ("GPD") of wastewater. The air conditioning system at the Site was installed in the mid-1960s and used water from an onsite well dug in 1964. At the time of Insulfab's operations, it was common for anti-corrosion agents containing chromium or chromate to be added to cooling tower water to guard against the corrosion of the metal parts of the cooling system. In 1987, during Insulfab's operations at the Site, approximately 15% of comfort cooling towers (for air conditioning) in the country were still using chromium-based water treatment chemicals. This practice was eventually entirely banned in the early 1990s, due to environmental concerns, primarily associated with wastewater discharges.

If chromates were used alone in the water, a concentration above 200 ppm was necessary to maintain corrosion protection; however, lower concentrations of chromates could be used if they were combined with other chemicals, commonly zinc or phosphate. EPA stated in 1987 that "a large amount of data has shown that the average concentration of chromate in industrial process cooling towers is 13 ppm" and that for "comfort cooling towers" (i.e., air conditioning), a reasonable assumption would be 10 ppm.

In addition to the chromium-based anti-corrosion agents introduced into the cooling tower water, typical water treatment programs included an antiscalant, an antifoulant, a dispersant, a surfactant, a biocide and an acid and/or caustic soda for pH control. These additives are made up of "many combinations of various chemicals." Anti-scalants and anti-foulants were often made of calcium carbonate, calcium sulfate and calcium phosphate. If phosphonates were used instead of phosphate, it was often necessary to add benzotriazole (or another azole) to minimize the corroding effect of chlorine combined with phosphonates. Microbiocides were usually made from chlorine, bromine, iodine, methylene bisthiocyanate, or, rarely, from acrolein or heavy metals.

A patent application from 1971 for a cooling tower water treatment system describes the customary practice of continuously running a chemical pump to inject the various anti-scalants, anti-corrosives into the system and periodically adding large quantities of algaecide as well. These systems included a water bleed system to allow the water "saturated with large quantities of minerals and chemicals" to be removed from the system and replaced with fresh water.

As late as 2003, a patent application described air conditioning condensate as "laden with various chemical constituents and heavy metal concentration."

See, Insulfab Employee Interview Summaries, Attachment 12 (BCSA0315983-90); Removal of Chromate from Cooling Tower Blowdown by Reaction with Electrochemically Generated Ferrous Hydroxide, 1973, Attachment 13 (BCSA0315660); Chromium Emissions from Comfort Cooling Towers – Background Information for Proposed Standards, 1988, Attachment 14 (BCSA0315677-8, BCSA0315682, BCSA0315688-9, BCSA0315694-9, BCSA0315707); US Patent - Cooling Tower Water Treatment System, 1971, Attachment 15 (BCSA0315849); US Patent – Air Conditioning Condensate Drainage System, 2003, Attachment 16 (BCSA0315857); Chromate Removal in Closed HVAC Recirculating Systems, undated, Attachment 17 (BCSA0315974); Joint Meeting Extension – Facility Plan, 1977, Attachment 23 (BCSA0076366); Well Record, 9-17-1964, Attachment 32 (BCSA0166540-1).

PERMITS (provide dates):

NPDES:

Information not available at this time.

POTW (pretreatment):

Information not available at this time.

NEXUS TO BERRY'S CREEK STUDY AREA (describe in detail; cite to supporting documentation; date or time period of disposal; list CERCLA hazardous substances; and volume, if known):

Direct (e.g. pipe, outfall, spill):

Given Insulfab's location and dates of operation, it is virtually certain that at least some of the Site's waste was deposited at one of the landfills in the Meadowlands area that discharged leachate to Berry's Creek. A former employee who had been involved with the plant's waste removal stated that he believed the plant waste was taken to a local landfill. A 1970 landfill study detailed the disposition of industrial waste generated within East Rutherford during the pre-RCRA period. During the late 1960s, large quantities of industrial waste were sent to Lyndhurst and Rutherford Landfills. In fact, 60% of all waste sent to Lyndhurst Landfill and 27% of all waste sent to Rutherford Landfill was industrial in nature. According to the report, 94% of waste generated in Bergen County from locations within five miles of the Hackensack Meadowlands district was disposed of within the Hackensack Meadowlands. Ninety-six percent of waste from locations within East Rutherford hauled to the Meadowlands for disposal was sent to either Lyndhurst or Rutherford Landfill.

Lyndhurst Landfill extends from Van Winkle Ditch (a tributary of Berry's Creek) to Berry's Creek, while Rutherford Landfill lies on man-made land east of Berry's Creek. These landfills were constructed between the mid-1940s and 1969 by filling in the local salt marshes with soil, debris and waste, including municipal, industrial, commercial and demolition waste. Insulfab was operating in East Rutherford for at least 18 of these years (1952-1969 inclusive).

A study done of the landfills in 2001 indicates that Rutherford & Lyndhurst Landfills were discharging 20,000-25,000 and 13,000-18,000 GPD of leachate respectively. Surface water sampling in 2001 confirmed that Rutherford Landfill was experiencing "ongoing" seeps into both the Hackensack River and Berry's Creek resulting in "contaminant loading above that of the background contaminants observed" for organic and inorganic constituents. Sampling of the fill in 2000 and 2001 indicated that aromatic hydrocarbons, phthalates, polycyclic aromatic hydrocarbons ("PAHs"), heavy metals and PCBs were present above the current restricted use criteria. Groundwater contaminated with aromatic hydrocarbons, phthalates, heavy metals and PCBs was observed to be migrating out of the landfills into Van Winkle Ditch, Viola Ditch (a tributary to Berry's Creek), Berry's Creek, Fish Creek and the Hackensack River. Surface water sampling indicated that aromatic hydrocarbons, polycyclic aromatic hydrocarbons and heavy metals were present in the landfill seeps and the surface waters surrounding the landfills with concentrations apparently highest in the seeps themselves. Sediment sampling likewise confirmed the presence of PAHs and heavy metals in the streambeds and seeps.

As discussed above, Insulfab's solid waste included waste machine oils and waste coolant, solvents, ink- and solvent-contaminated cans and rags and plastic powder. While as of 1990, there was insufficient data to confirm or deny that plastics additives containing hazardous substances like lead and cadmium were contributing to the volume or toxicity of leachate in municipal landfills, waste oils, coolants and solvents all contain hazardous substances, some of which were identified in the landfill sampling discussed above.

Additionally, plant trash in general is documented to include hazardous substances. For example, a 1977 Handbook of Solid Waste Management indicates that waste streams from the rubber and plastics industry, of which Insulfab is a part, contains chlorinated hydrocarbons (including PCBs), cyanide, mercury, miscellaneous organics and zinc, some of which were found in the landfill sampling discussed above.

See, Insulfab Employee Interview Summaries, Attachment 12 (BCSA0316031); Multiple Permit Application for the HMDC-Encap Golf Inc. Brownfield Redevelopment Project, 10-2000, Attachment 26 (BCSA0127606-7); Analysis of Alternative Solid Waste Management Systems, 5-1970, Attachment 27 (BCSA0095599, BCSA0095600, BCSA0095611); Remedial Investigation Report – Lyndhurst & Rutherford Landfills, 2001, Attachment 28 (BCSA0179612-4); Encap Correspondence, Attachment 29 (BCSA0170184-7, BCSA0179547-8); Handbook of Solid Waste Management, 1977, Attachment 30; Environmental Fact Sheet – Plastics Production, Use & Disposal, 1990, Attachment 31 (BCSA0315648); Machine Coolant Waste Reduction, 1990, Attachment 33, (BCSA0316192).

<u>Sanitary Sewer</u> (provide name and location of sanitary sewer and receiving POTW):

From the start of Site operations in 1952 until 1988, when the Joint Meeting plant was abandoned and all sewage pumped to the Bergen County Utilities Authority ("BCUA"), Insulfab discharged wastewater to the Joint Meeting. From 1964 or 1965 on, this included the discharge from the plant's air conditioning system. The receiving waters for the Joint Meeting were Berry's Creek.

See, List of Joint Meeting Customers, 1977, Attachment 18 (BCSA0159027); Dominick Presto Affidavit, 6-12-1990, Attachment 19 (BCSA0092871-72); Rutherford-East Rutherford-Carlstadt Joint Meeting NPDES Permit, 3-31-1979, Attachment 20 (BCSA0066768); Feasibility Report on Water Pollution Control Systems, 1970, Attachment 21 (BCSA078998).

The Joint Meeting had a long and well-documented history of inadequately treating process wastes from its industrial customers. The facility was constructed between 1939 and 1940 to provide secondary treatment for wastewater originating in Carlstadt, Rutherford and East Rutherford. The facility was placed into operation in 1941 and by 1967, was already producing unsatisfactory effluent and inadequate treatment.

See, Joint Meeting RERC – Preliminary Report on Sewerage Facilities, 1966, Attachment 22 (BCSA0076686); Joint Meeting Extension – Facility Plan, 1977, Attachment 23 (BCSA0076370-71).

The Joint Meeting was issued a pollution abatement order by the New Jersey Department of Health ("NJDOH") in 1967 and was ordered, in its NPDES Permit effective March 31, 1979, to cease operations and convey all flows to the BCUA. In a 1970 report on water pollution control systems, the Joint Meeting was described as being both hydraulically overloaded and organically overloaded due to various industrial wastes which were damaging the filter media. The plant at that time was unable to meet NJDOH requirements for effluent into Berry's Creek. The "plant efficiency and continuity of operation [was] seriously affected by malfunctioning of deteriorated equipment in practically all of the plant units."

See, Rutherford-East Rutherford-Carlstadt Joint Meeting NPDES Permit, 3-31-1979, Attachment 20 (BCSA0066768-82); Feasibility Report on Water Pollution Control Systems, 1970, Attachment 21 (BCSA0078999, BCSA0079002).

According to a 1977 Joint Meeting Extension Facility Plan prepared by Clinton Bogert Associates,

> *Since its construction in 1940, the plant has performed inadequately. The inadequate treatment results mainly from operating and` maintenance problems. Treatment units which malfunctioned were removed and not repaired. The mechanical equipment has become obsolete. Presently, the tricking filters often clog requiring the flow to be bypassed... [ ] The JM plant now provides less than primary treatment, removing on average only about 25 percent of the BOD and suspended solids from the influent sewage.*

The report also states that the poor quality of the water in Berry's Creek was "mainly due to the poor operation of the JM plant."

Further, the Joint Meeting's sludge incineration facilities were inoperable and thickened raw sludge was pumped to a lagoon, which in turn, polluted groundwater at the Joint Meeting, which was located in close proximity to Berry's Creek. Consulting engineers stated the following with respect to groundwater impacts and leachate generation from the sludge lagoons.

> *[The Joint Meeting] plant abandonment will have several beneficial impacts on water quality. BOD, organic nitrogen, phosphorus, COD and heavy metal loadings in Berry's Creek will be reduced when the treatment plant discharge is eliminated. This will improve water quality in Berry's Creek. Termination of sludge lagooning at the plant site will prevent*

<u>further</u> pollution of groundwater supplies. [emphasis added] Leachate from the lagoons will be reduced after the lagoons have stabilized.

Coagulating tanks were non-functional starting sometime in the 1940s, causing effluent to be bypassed from the tanks from that time forward.

In addition to the above problems, consulting engineers identified several pathways of influent and crossover between the sanitary and storm sewers throughout the Joint Meeting network, as well as instances of sewage bypassing, resulting in industrial waste intended for the POTW being discharged to the storm system and potentially to Berry's Creek.

The District Court of New Jersey issued a Partial Consent Decree on November 14, 1985, ordering the Joint Meeting to cease discharges on January 1, 1988. On January 13, 1988, all flows from the Joint Meeting were conveyed to the BCUA.

Accordingly, and as described above, industrial effluent from Insulfab was discharged via (1) the Joint Meeting's bypassing of untreated or under-treated industrial waste to Berry's Creek, (2) leachate discharges from the Joint Meeting sludge lagoons via runoff to nearby Berry's Creek, and (3) contaminated groundwater discharges from the Joint Meeting sludge lagoons to nearby Berry's Creek.

As discussed above, cooling tower / air conditioning discharge water was historically contaminated with hazardous substances, including chromium and chromate compounds, and other heavy metals including zinc, as well as chlorine and other chemicals. Former employees state that the facility's operations were consistent over time, so it would be reasonable to assume that the volume of wastewater discharged in 1974 would be the same for the entire time that the air conditioning system was operational, at least 15 years of which were not covered by a federal permit (1965-1979 inclusive).

See, Dominick Presto Affidavit, 6-12-1990, Attachment 19 (BCSA0092871); Joint Meeting Extension – Facility Plan, 1977, Attachment 23 (BCSA0076336, BCSA0076377-8, BCSA0076400, BCSA0076428-29, BCSA0076434-35, BCSA0076444-47, BCSA0076466, BCSA0076498); BCUA Joint Meeting Extension Map, Attachment 24 (BCSA0073974); Rutherford-East Rutherford-Carlstadt Joint Meeting POTW Map 3, Attachment 25.

<u>Storm Sewer</u> (provide name and location of storm sewer and receiving waters):

Information not available at this time.

Runoff:

Information not available at this time.

Groundwater:

Information not available at this time.

POTENTIAL NEXUS TO BERRY'S CREEK STUDY AREA (describe in detail; cite to supporting documentation; list CERCLA hazardous substances; and volume, if known):

Direct (e.g. pipe, outfall, spill):

See above discussion of direct releases to Berry's Creek.

Sanitary Sewer (provide name and location of sanitary sewer and receiving POTW):

See above discussion of sanitary overflow releases to Berry's Creek.

Storm Sewer (provide name and location of storm sewer and receiving waters):

Information not available at this time.

Runoff:

Information not available at this time.

Groundwater:

Information not available at this time.

TABLE OF CONTENTS

BERRY'S CREEK STUDY AREA

TABLE OF CONTENTS

NEXUS PACKAGE FOR INSULFAB PLASTICS, INC.

Attachment 1	Lexis Dossier – Insulfab Plastics, 2009
Attachment 2	Industrial Pretreatment Waste Survey, 1988
Attachment 3	Insulfab Plastics Site Map 1
Attachment 4	Insulfab Plastics Site Map 2
Attachment 5	NJ Industrial Directory – E. Rutherford, 1952-53
Attachment 6	E. Rutherford Board of Health Minutes, 1952
Attachment 7	Spartanburg Herald Article, 8-16-1998
Attachment 8	NJ Industrial Directory – E. Rutherford, 1973
Attachment 9	NJ Industrial Directory – E. Rutherford, 1998
Attachment 10	SIC Codes, 2009
Attachment 11	NJ Industrial Directory – E. Rutherford, 1991
Attachment 12	Insulfab Employee Interview Summaries

7/31/2009

Attachment 13	Removal of Chromate from Cooling Tower Blowdown by Reaction with Electrochemically Generated Ferrous Hydroxide, 1973
Attachment 14	Chromium Emissions from Comfort Cooling Towers - Background Information for Proposed Standards, 1988
Attachment 15	US Patent - Cooling Tower Water Treatment System, 1971
Attachment 16	US Patent - Air Conditioning Condensate Drainage System, 2003
Attachment 17	Chromate Removal in Closed HVAC Recirculating Systems, undated
Attachment 18	List of Joint Meeting Customers, 1977
Attachment 19	Dominick Presto Affidavit, 6-12-1990
Attachment 20	Rutherford-East Rutherford-Carlstadt Joint Meeting NPDES Permit, 3-31-1979
Attachment 21	Feasibility Report on Water Pollution Control Systems, 1970
Attachment 22	Joint Meeting RERC - Preliminary Report on Sewerage Facilities, 1966
Attachment 23	Joint Meeting Extension - Facility Plan, 1977
Attachment 24	BCUA Joint Meeting Extension Map
Attachment 25	Rutherford-East Rutherford-Carlstadt Joint Meeting POTW Map 3

Attachment 26	Multiple Permit Application for the HMDC-Encap Golf Inc. Brownfield Redevelopment Project, 10-2000
Attachment 27	Analysis of Alternative Solid Waste Management Systems, 5-1970
Attachment 28	Remedial Investigation Report - Lyndhurst & Rutherford Landfills, 2001
Attachment 29	Encap Correspondence
Attachment 30	Handbook of Solid Waste Management, 1977
Attachment 31	Environmental Fact Sheet - Plastics Production, Use & Disposal, 1990
Attachment 32	Well Record, 9-17-1964
Attachment 33	Machine Waste Coolant Reduction, 1990

ATTACHMENT 1

108D5B

Print Request: Current Document (1)

Time of Request: Wednesday, June 17, 2009 19:26:29

Job Number: 1822:162681515

Client ID/Project Name:

Research Information:

-- Snapshot --, Insulfab Plastics, Inc.

Regarding:

Sent by:

Send to: U OF CALIF - DAVIS, ACD UNIVERSE
UNIVERSITY OF CALIFORNIA - DAVIS
UNIVERSITY LIBRARY
DAVIS, CA 95616

Snapshot

Insulfab Plastics, Inc.

Insulfab Plastics, Inc.

Type	Private
Address	834 Hayne St. Spartanburg 29301-1818 United States
Phone	864-582-7506
Fax	
DUNS® Number	
Ticker(s)	
Exchange(s)	
Email	
Internet	
Employees	115

Industry Classification

Primary SIC Code	Plastics products, nec (3089)
Primary NAICS Code	All Other Plastics Product Manufacturing (326199)
Secondary NAICS Codes	Sporting Goods Stores (451110)

Business Description

Manufacturing; Mfg Plastic Products

from Global Duns Market Identifiers, April 28, 2009
Copyright 2008 Dun & Bradstreet, Inc.

Yearly Financials

		Source
NET SALES	8,100,000	1

[1] Global Duns Market Identifiers, Copyright 2008 Dun & Bradstreet, Inc.

Executives

Name	Title	Age
Frank Jay Hanus III	Owner	
Dina Brehmer	Pres	
Charles Casey	Gen Mgr	

from Standard & Poor's Register of Corporations, May 4, 2009
Copyright 2008 McGraw-Hill, Inc.

ATTACHMENT 2

003242

Office: (201) 641-2552
Plant: (201) 641-2555

BERGEN COUNTY UTILITIES AUTHORITY

Box 122, Foot of Mehrhof Road, Little Ferry, New Jersey 07643

RICHARD F. KILLEEN
Acting Executive Director

VINCENT A. CALDARELLA, Chairman
EUGENE J. BROPHY, Vice Chairman
JAMES ANZEVINO
MARTIN J. HAYES
FRANK C. LONGO
MICHAEL P. RINKO
JOHN E. ROONEY
ROSE TEAGUE
THOMAS J. TOSCANO

Returned

Completed 2/15/88

February 2, 1988

Insulfab Plastics
150 Union Avenue
East Rutherford, New Jersey 07073

RE: Industrial Pretreatment Program
Industrial Pretreatment Waste Survey

Gentlemen:

The Bergen County Utilities Authority effectuated its Industrial Pretreatment Program (IPP) on August 1, 1984, as approved by the New Jersey Department of Environmental Protection. The program addresses the discharge of industrial process wastewater into our collection and treatment facilities.

In accordance with Federal and State regulations applicable to the IPP, the Authority is required to update the Industrial Pretreatment Waste Survey periodically.

Please find enclosed a copy of the aforementioned survey. This survey must be completed and filed with the Authority within two weeks of receipt.

If there are any questions, please do not hesitate to contact Mr. Alfred Struhs of my staff.

Very truly yours,

BERGEN COUNTY UTILITIES AUTHORITY

By: Steven M. Mizerek
STEVEN M. MIZEREK
Principal Engineer

encl.

BCUA USE ONLY

Facility No. _____

Facility _____

Following are further requirements of the Industrial Pretreatment Waste Survey.

1) Submission of one year of Hackensack water company bills (Photo copies only).

2) Number of employees employed at the facilities: 63

3) Annual Number of Days in operation 250

*Please be advised the federal definition of Process Wastewater is as follows:

Process Wastewater:

Any water which, during manufacturing or processing, comes into direct contact with or results from the production or use of any raw material, intermediate product, finished product, by product, or waste product.

BERGEN COUNTY UTILITIES AUTHORITY
INDUSTRIAL PRETREATMENT WASTE SURVEY

General Information

Facility Name: INSULFAB PLASTICS INC

Facility Address: 150 UNION AVE
E. RUTHERFORD NJ 07073

Zip Code: 07073 Telephone Number: (201) 939-7393

Facility Address: (SAME)

Zip Code: Telephone Number: ( )

Standard Industrial Classification Number(s) (SIC Code) for your Facilities

Primary SIC Code:

Secondary SIC Code:

1. Type Ownership of Facilities

Private: ✓ Public: State: Federal:

Other (Specify):

2a. Operational Status of Facility

In Operation: ✓ Closed: Under Construction:

Proposed:

Note: If facilities is in operation proceed to 2b.

2b. Name, title, and telephone number of person authorized to represent this firm in official dealings with the Bergen County Utilities Authority

Person: J. G. NEMETH

Title: PRESIDENT Telephone Number: (201) 939-7393

Alternate person to contact concerning information provided herein

Person: H. VOELKNER

Title: PLANT MANAGER Telephone Number: (201) 939-7393

BCSA0311095

3. Identify the type of business conducted (auto repair, machine shop, electroplating, warehousing, printing, etc.)

INDUSTRIAL PLASTICS MACHINING

4. Provide a brief narrative description of the manufacturing, production, or service activities your firm conducts

CUSTOM FABRICATION TO B/P SPECIFICATIONS, USING BASIC SHAPES OF SHEETS, RODS, TUBES, PLATE, ETC.

5. Does this facility discharge wastewater to a Publicly Owned Treatment Works (POTW)?

Yes: _____ No: ✓

*If no proceed to signatory section, if yes, proceed with survey.

a. Does this facility meet any of the following criteria for classification as a significant POTW user?

1. Does discharge to POTW exceed 25,000 gpd. of process wastewater?*

Yes: _____ No: _____

2. Based upon knowledge of the process(es) producing the wastewater or upon previous discharge analysis, discharge to the POTW contains more than 53 pounds per day of either 5-day Biological Oxygen Demand (BOD) or Chemical Oxygen Demand (COD) or 42 pounds per day of Total Suspended Solids (TSS)

Yes: _____ No: _____

b. This facility generates the following types of wastes (Check all that apply)

		(Avg. Gpd)		
1.	_____ Domestic Waste	_____ Estimated	_____ Measured	_____
2.	_____ Cooling Water, Non-Contact	_____ Estimated	_____ Measured	_____
3.	_____ Boiler/Tower Blowdown	_____ Estimated	_____ Measured	_____
4.	_____ Cooling Water, Contact	_____ Estimated	_____ Measured	_____
5.	_____ Process*	_____ Estimated	_____ Measured	_____
6.	_____ Equipment/Facility Washdown	_____ Estimated	_____ Measured	_____
7.	_____ Air Pollution Control Unit	_____ Estimated	_____ Measured	_____
8.	_____ Storm Water Runoff to Sewer	_____ Estimated	_____ Measured	_____
9.	_____ Other (describe)	_____ Estimated	_____ Measured	_____

Total _____

*Process Wastewater

Any water which, during manufacturing or processing, comes into direct contact with or results from the production or use of any raw material intermediate product, finished product, byproduct, or waste product.

c. Wastes are discharged to (check all that apply)

		(Avg.Gpd)	Type of Waste (1-9 from 5B)
_____	Sanitary Sewer	_____	_____
_____	Storm Sewer	_____	_____
_____	Surface Water	_____	_____
_____	Ground Water	_____	_____
_____	Waste Haulers	_____	_____
_____	Evaporation	_____	_____
_____	Other (describe)	_____	_____

Provide name and address of waste hauler(s), if used.

_____

_____

d. Based upon knowledge of materials and operations used at this facility, could the discharge to the POTW contain any of the priority pollutants listed in Table I, if yes indicate on Table, which pollutants are present

e. Are Pretreatment facilities currently operating?

Yes: _____ No: _____

If yes, the type of Pretreatment operations are:

_____	Biological	_____	Neutralization
_____	Chemical Stabilization	_____	Oil and Grease Removal
_____	Filtration	_____	Sedimentation
_____	Flow Equalization	_____	Other (describe)
_____	Absorption		

*This is to be signed by an authorized official of your firm after adequate completion of this form and review of the information by the signing official.

I have personally examined and am familiar with the information submitted in this document and attachments. Based upon my inquiry of those individuals immediately responsible for obtaining the information reported herein, I believe that the submitted information is true, accurate and complete.

2-10-88
Date

Signature of Official
(Seal if Applicable)

Priority Pollutant Information: Please indicate by placing an "x" in the appropriate box by each listed chemical whether it is "Suspected to be Absent," "Known to be Absent," "Suspected to be Present," or "Known to be Present" in your manufacturing of service activity or generated as a by-product.

CHEMICAL COMPOUND	KNOWN PRESENT	SUBSEQUENT PRESENT	KNOWN ABSENT	SUBSEQUENT ABSENT	KNOWN OR SUSPECTED CONCENTRATION/DAY
I. METALS & INORGANICS					
1. Antimony	___	___	___	___	___
2. Arsenic	___	___	___	___	___
3. Asbestos	___	___	___	___	___
4. Beryllium	___	___	___	___	___
5. Cadmium	___	___	___	___	___
6. Chromium	___	___	___	___	___
7. Copper	___	___	___	___	___
8. Cyanide	___	___	___	___	___
9. Lead	___	___	___	___	___
10. Mercury	___	___	___	___	___
11. Nickel	___	___	___	___	___
12. Selenium	___	___	___	___	___
13. Silver	___	___	___	___	___
14. Thallium	___	___	___	___	___
15. Zinc	___	___	___	___	___
II. PHENOLS & CRESOLS					
16. Phenol(s)	___	___	___	___	___
17. Phenol, 2-chloro	___	___	___	___	___
18. Phenol, 2,4-dichloro	___	___	___	___	___
19. Phenol, 2,4,6-trichloro	___	___	___	___	___
20. Phenol, pentachloro	___	___	___	___	___
21. Phenol, 2-nitro	___	___	___	___	___
22. Phenol, 4-nitro	___	___	___	___	___
23. Phenol, 2,4-dinitro	___	___	___	___	___
24. Phenol, 2,4-dimethyl	___	___	___	___	___
25. m-Cresol, p-chloro	___	___	___	___	___
26. o-Cresol, 4,6-dinitro	___	___	___	___	___

BCSA0311099

CHEMICAL COMPOUND	KNOWN PRESENT	SUBSEQUENT PRESENT	KNOWN ABSENT	SUBSEQUENT ABSENT	KNOWN OR SUSPECTED CONCENTRATION/DAY
III. MONOCYCLIC AROMATICS (EXCLUDING PHENOLS, CRESOLS AND PHTHALATES)					
27. Benzene	___	___	___	___	___
28. Benzene,chloro	___	___	___	___	___
29. Benzene, 1,2-dichloro	___	___	___	___	___
30. Benzene, 1,3-dichloro	___	___	___	___	___
31. Benzene, 1,4-dichloro	___	___	___	___	___
32. Benzene, 1,2,4-trichloro	___	___	___	___	___
33. Bebzene, hexachloro	___	___	___	___	___
34. Benzene, ethyl	___	___	___	___	___
35. Benzene, nitro	___	___	___	___	___
36. Toluene	___	___	___	___	___
37. Toluene, 2,4-dinitro	___	___	___	___	___
38. Toluene, 2,6-dinitro	___	___	___	___	___
IV. PCBs & RELATED COMPOUNDS					
39. PCB-1016	___	___	___	___	___
40. PCB-1221	___	___	___	___	___
41. PCB-1232	___	___	___	___	___
42. PCB-1242	___	___	___	___	___
43. PCB-1248	___	___	___	___	___
44. PCB-1254	___	___	___	___	___
45. PCB-1260	___	___	___	___	___
46. 2-Chloronaphthalene	___	___	___	___	___
V. ETHERS					
47. Ether, bis(chloromethyl)	___	___	___	___	___
48. Ether, bis(2-chloroethyl)	___	___	___	___	___
49. Ether, bis(2-chlorosopropyl)	___	___	___	___	___

BCSA0311100

ATTACHMENT 3

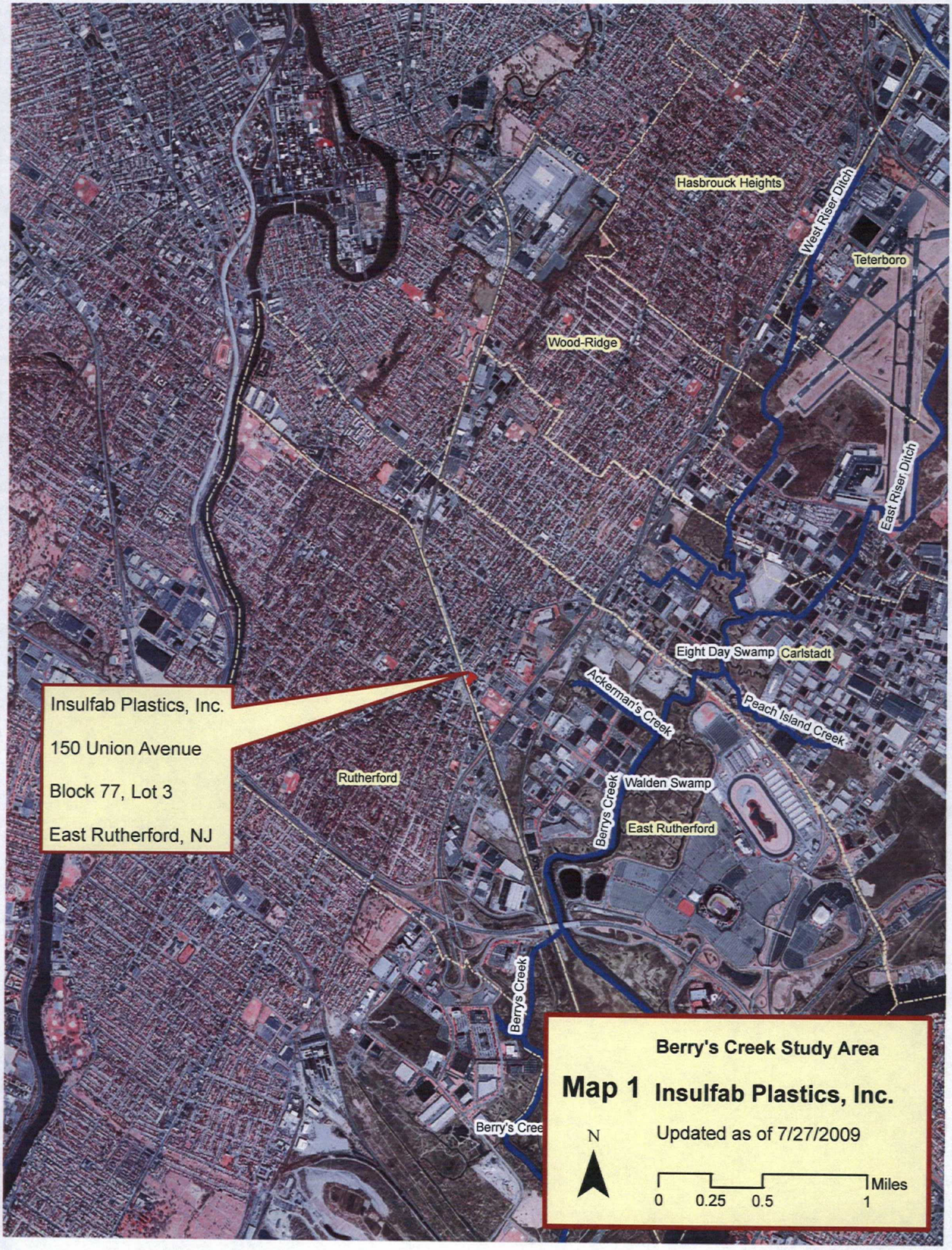
Hasbrouck Heights
West Riser Ditch
Teterboro
Wood-Ridge
East Riser Ditch
Eight Day Swamp
Carlstadt
Ackerman's Creek
Peach Island Creek
Insulfab Plastics, Inc.
150 Union Avenue
Block 77, Lot 3
East Rutherford, NJ
Rutherford
Walden Swamp
Berrys Creek
East Rutherford
Berrys Creek
Berry's Cree
Berry's Creek Study Area
Map 1
Insulfab Plastics, Inc.
Updated as of 7/27/2009
N
0
0.25
0.5
1
Miles

ATTACHMENT 4

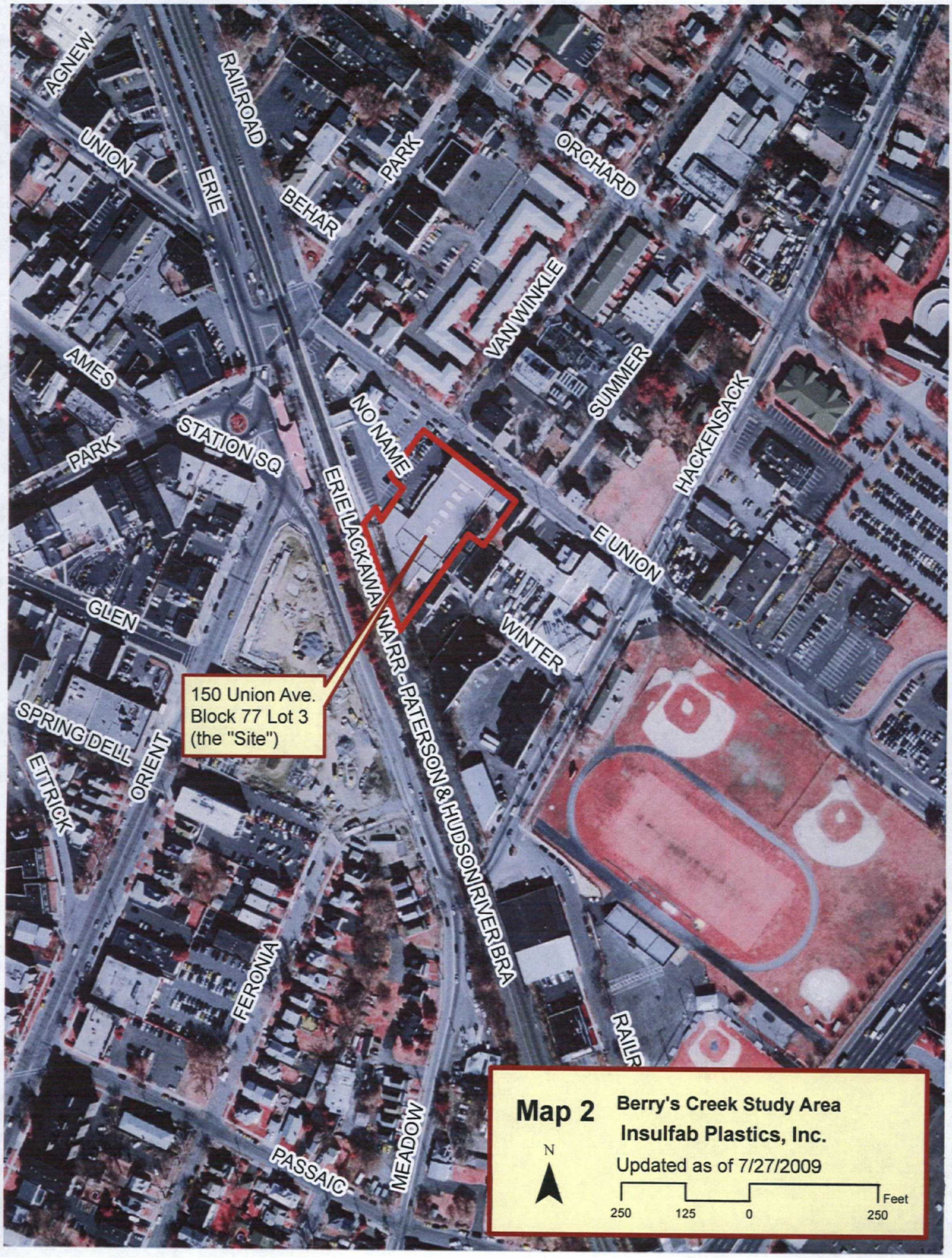
AGNEW
UNION
ERIE
RAILROAD
BEHAR
PARK
ORCHARD
VAN WINKLE
AMES
SUMMER
HACKENSACK
NO NAME
STATION SQ
PARK
ERIE LACKAWANNA RR - PATERSON & HUDSON RIVER BRA
E UNION
GLEN
WINTER
150 Union Ave.
Block 77 Lot 3
(the "Site")
SPRING DELL
ORIENT
ETTRICK
FERONIA
RAILR
PASSAIC
MEADOW
Map 2
Berry's Creek Study Area
Insulfab Plastics, Inc.
Updated as of 7/27/2009
N
250
125
0
250
Feet

ATTACHMENT 5

PROPERTY OF
NEW JERSEY STATE LIBRARY

JAN 10 1973

185 W. State Street
Trenton, N. J.

NEW JERSEY INDUSTRIAL DIRECTORY

1952-53

185 W. State Street
Trenton, N. J.

JAN 10 1973

PROPERTY OF
NEW JERSEY STATE LIBRARY

Compiled, Edited and Published by the
HUDSON DISPATCH
UNION CITY, N. J.

J338.058
I42

PROPERTY OF
NEW JERSEY STATE LIBRARY

PRICE $20.00

BCSA0068809

contd.)

Market st &
toilet tissue,

, Inc., River
xes), sheets,
e, toilet tis-
per, straws,
achine rolls,
r 409
n Riper av,
stic dyes..... 12
ative Assoc.,
conditioning
..... 3
et & River

109 Midland
..... 50
oulevard &
s, enamels..... 15
ulevard, sun
..... 16
Summit av,
t pastes for
products for
ental, powd-
& research
..... 6
Midland av,
house 20
Broadway,
..... 4
merica, 180
ubes 100
245 E. 54th
en cabinets,
: work sur-
& corner
..... 21
per av, car-

Inc Mar. 28,
38. Elev 0-140
and 5275 lots.
ax rate $6.03.
otection 4 vol
rt of county,
Vallington and
ack River and
oad Erie. Ex-
ford National.
), 66 teachers,
Police 1 chief,
geant, 1 detec-
rs with 1 way
estic and fire
ter Co. Build-
finance, 1931.
s Atkins, pres
av. Manufac-
uments, print-
goods, toilet
Creek Bridge,

LA MAGNA MFG CO - MACHINE SHOP

BERGEN COUNTY (contd.)

EAST RUTHERFORD (contd.)

Industries: Employees

Alpha Refining Co., Rt No. 3, refining lab. oil 2
Alpha Screw Products Co., 322 Commercial av, screw machine products
Anders Chemical Company, 26 Poplar st, textile pigment printing colors, lacquers
Beardmore Products, Inc., 50 Paterson av, bath oil capsules, bubble bath capsules, crystal bubble bath 14
Becker Bronze & Iron Works, 207 Everett pl, iron work 2
Becton Dickinson & Co., Ann & Cornelia sts, surgical specialists
Bell Container Corporation, 1 Maple st, corrugated shipping containers & paper products
Bergen Sheet Metal Works, 240 Hackensack st, complete sheet metal line
Boiling Springs Finishing and Plating Co. Inc., 83 Uhland st, polishing & plating steel & brass products 4
Borthig, George C., Co., Inc., State hwy 3, Box 115, insulating varnishes 12
Cali-Footwear Co. Inc., 83 Uhland st, casual shoes & slippers
Carlton Cleaners, 850 Paterson av, dry cleaning 1
Carlton Hosiery Mills, Inc., 45 Carlton av, ladies' full fashion hosiery
Chapin, Chas. E., Inc., 255 Hackensack st, carbon specialties (brushes, rings, etc.) 72
Charvos, Inc., 185 Hackensack st, precision drawing instruments
Chemical Bank Note Co., Inc., Railroad av & Everett pl, printing
East Rutherford Syringes, Inc., 480 Paterson av, hypodermic syringes
Evenpul Foundations, Inc., Maidwell Braissiere & Corset Co., 321 Main st, foundation garments & brassieres
Flintkote Co., The, Central av, asphalt, asbestos cement roofing & siding & allied products, asphalt, resin & rubber emulsions 1052
Garfield Iron & Metal Co., 770 Paterson av, scrap iron
General Printing Ink Corp., Central av & Herman st, rotogravure ink 9
Grove Stamping and Mfg. Co., 366 Grove st, metal, novelties, kitchen utensils, rat traps & smokers' items 18
Hanis, M., & Co., 253-259 Hackensack st, general machine work, turret lathe products 27
Harris, M., & Co., 259 Hackensack st, machine shop 16
Herrick, William, Ink Co., Inc., 1 Maple st, printers' & lithographers' inks..... 34
Ideal Cleaners, 132 Park av, cleaning 20
Industrial Service Co., 51 Paterson av, machinery 16
Insulating Fabricators, Inc., 150 Union av,

BERGEN COUNTY (contd.)

EAST RUTHERFORD (contd.)

Matheson Co., Inc., 337 Paterson plkrd, compressed gases in steel cylinders 39
Miller, Tompkins and Company, 513-525 Paterson av, Multiwall paper shipping sacks
Monroe Sign Corp., 253-259 Hackensack st, neon signs, store fronts 15
Muchnacky, John, 195 Hackensack st, embroidery laces & novelty 2
McGonegal Mfg. Company, The, Railroad av & Mozart st, tool post grinders
New Jersey Warehouse (Semco Furniture Corp.), 1 Maple st, chrome dinette sets 2
Olze, Alex, t/a Anders Chemical Co., 26 Poplar st, textile colors 7
Paragon Steel & Tool Co., Paterson plkrd, tools 8
Petrie Brothers, 263 Paterson av, printing 5
Plastic Mold Tool & Die Co., 1 Maple st, machine tools 35
Pollard Welding, 928 Paterson av, welded boilers 2
Roofing Sales Co., Inc., 524 Paterson av, roofing products 18
Rutherford Machinery, 401 Central av, cameras, plate making equipment, photo-composing and special graphic arts machinery 100
Rutherford Press Inc., 210 Orchard st, magazine printing 62
Semco Furniture Corp., 1 Maple st, chrome dinette sets 2
Solar Instrument Corp., 185 Hackensack st, optical instruments 6
Spevack & Garbaccio, Inc., 190-200 Van Winkle st, dyers, printers & finishers of ribbons & narrow fabrics of all types .. 72
Spill Manufacturing Co., 104 Cornelia st, sunglasses & goggles 22
Standard Insulation Co., 74 Paterson av, coating and lamination for cap liners & packaging specialties 78
Sun Chemical Corporation, Central av & Herman st, printing inks & machinery, paints & chemicals
Tele-Instrument Co., Inc., 50 Paterson av, precision laboratory & production test equipment for the radio & TV industries
Trubek Laboratories, The, State hwy 17, aromatic chemicals 151
Uniflex Rubber Co., 40-42 Paterson av, molded rubber goods 18
U. S. Cleaners of East Rutherford, 450 Rutherford av, cleaners 7
U. S. Mica Company, Inc., Jordan & Van Dyke sts, grinders 13
Valley Brook Laundry, 236a Park av, retail store for laundry 2
Zanker Machine Works, 275 Railroad av, machine shop 1

EDGEWATER (Boro). Inc Nov. 8, 1[illegible] 1940 4,028; 1950 3,952. Elev 0-110 [illegible] .07 sq mi: 414 acres and 1232 lots. Net

BCSA0068814

ATTACHMENT 6

District Health Engineer,
(File)

From this board to Mr. Bernard Kaplan, District Chief Public Health Engineer, Newark, N.J., dated January 30th,1952.

In reference to your letter dated Jan. 25,1952, sent to Dr. R.E.Lueddecke, Health Officer, pertaining to written complaint received by your office, from Mrs. Frick, 33 Union Ave., East Rutherford complaining of the vibrations, of certain machinery at the Insulating Fabricators Co., Inc., 150 Union Ave., East Rutherford have become unbearable and so disturbing as to be a health hazard. As per your request Mr. Fred Taylor our sanitary inspector made a reinvestigation and found that there is a vibration and it is also annoying to the employees.

Mr. H.D.Randall, sales manager of the above company told our sanitary inspector Mr. Fred Taylor that they are working on a secret government contract which will be completed in three weeks, providing we don't get another government contract. In the meantime we will try to eliminate the above problem.

We would appreciate your cooperation in the matter, if you would please send a representative of the Bureau on Adult and Industrial Health, to accompany our Sanitary Inspector Mr. Fred Taylor to the above mentioned address. Mr. Taylor's telephone number is Rutherford 2-4470. Please call in advance for an appointment.
(File)

BILLS:
From Petree Press, dated January 24,1952.

Printing 500 Public Notice Forms		$ 10.50
Printing 500 No. 10 envelopes		7.95
Furninhing and printing 500..3¢ # 8 envelopes		24.65
	Total	$ 43.10

To Robert B.Sontas, paid to Keys Urquhart Co, Inc., 641 Main Ave., Passaic. $ 5.75 for one (1) rubber stamp and wood cue, signature of Robert B.Sontas, to be used by Mrs. Josephine Domenick.....total $ 5.75.

NEW BUSINESS:
Motion made by Mr. John Ruffino, seconded by Mr. Fred Taylor and carried on the following roll call, Mr. O.B.Jones, Henry Herr, Henry Holland Sr, Joseph Schanel, John Ruffino, Fred Taylor and Dr. Lueddecke, that the secretary be authorized to get a price on signs reading " no dogs allowed" by order of the East Rutherford board of health, and make a report at next meeting.

REPORTS:
Sanitary Inspector Mr. Fred Taylor reported forty two (42) inspections made and five (5) plans filed.

ATTACHMENT 7

ProQuest

Databases selected: ProQuest Newspapers

Challenging the status quo

Davis, Kathleen. **Spartanburg Herald - Journal.** Spartanburg, S.C.: Aug 16, 1998. pg. E1

Abstract (Summary)

The management of Insulfab Plastics Inc. in Spartanburg wants the company to reach $40 million in annual sales by 2001, a doubling of its current business.

Full Text (740 words)

Copyright Spartanburg Herald-Journal Aug 16, 1998

The management of Insulfab Plastics Inc. in Spartanburg wants the company to reach $40 million in annual sales by 2001, a doubling of its current business.

To make this goal a reality, the 75-year-old company, which custom fabricates plastics and other nonmetallic materials, is aggressively growing its customer base in the electrical, electronic and process markets, said Robert F. McQuiggan, executive vice president of Insulfab.

Two years ago, the company implemented a strategic business plan that involved all operations and divisions, from management to marketing and engineering, McQuiggan said.

"We changed rather quickly during the last few years," he said. "Things were stodgy and needed to change."

Cultivating new business, particularly in the semiconductor and process industries, has been key to the company's growing sales, McQuiggan said. Still, about 40 percent of Insulfab's clients remain in the electrical sector.

At its headquarters on Hayne Street where 85 of the company's 200 employees work, Insulfab houses administrative offices, a warehouse, and machining and punching operations.

Robbie Promenschenkel, a customer service manager who has been at Insulfab for eight years, has witnessed the company's customer base change.

"When I was first here, we served a lot of automotive companies," Promenschenkel said. "Now, we're more into the semiconductor business ... We've changed with our customers."

With modern computer numerically controlled (CNC) equipment, skilled Insulfab workers perform precision saw cutting, lathe turning, drilling, boring, shaping, contouring, thermoplastic welding and other types of machining and punching.

Typically, Insulfab crafts components used in clients' manufacturing processes, said Graham Bridges, corporate director of procurement. Nonmetallic materials fabricated include composites of resin, cloth, hybrid thermoplastic materials and glass.

The company also does reverse engineering, he said, to give clients exactly what they want.

Insulfab deals primarily with Fortune 500 companies, McQuiggan said, manufacturing for customers worldwide. Electrical clients include General Electric, Cutler-Hammer, Square D Co., The Singer Co. and Ryobi, he said.

Insulfab serves such electronic businesses as KEMET Corp., Motorola Inc. and Texas Instruments. Westinghouse Air Brake Co. and R.R. Donnelley & Sons Co. are two process industry companies that buy services from Insulfab.

On any given day, skilled employees may machine and punch 100 types of products and work with about 1,000 materials, Bridges said.

BCSA0314783

Punch press supervisor Leatus Green said workers must have a certain level of skill to run the computerized equipment. Geometry, trigonometry, blueprint reading and computer language skills are important, he said, as is continuous training.

The CNC equipment at Insulfab is between 1 and 8 years old. McQuiggan plans to spend $1.4 million on equipment and other upgrades at the Spartanburg facility over the next three years.

"Investing in technology is key to the future of the company and the future of the employees," he said.

For three generations, the Hanus family has held the company privately, with no plans to go public, McQuiggan said.

The business began in 1918 as a tool and dye shop in New York. During the Depression, the company was strongly involved with the manufacture of radio bases, he said.

The company -- which was known as Insulating Fabricators of New Jersey, New England and South Carolina -- established a facility in Boston in the 1940s and moved to East Rutherford, N.J., McQuiggan said.

In 1954, Insulating Fabricators opened a high volume, precision stamping facility in Franklin, N.H., he said. In 1961 the company bought the Budd Division of Continental Diamond Fiber in Duncan and moved operations to its present site in Spartanburg.

The company changed its name to Insulfab Plastics Inc. in 1973. In 1989, Insulfab bought a Westinghouse facility in Ponce, Puerto Rico, McQuiggan said. The site now performs precision stamping and nonmetallic fabrication for electrical companies.

The New Jersey facility closed in 1991 and the Spartanburg location was expanded, McQuiggan said.

The company added about 18,000 square feet to the now 62,000-square-foot building. McQuiggan said the company will expand the Spartanburg site by 50 percent during the next three years.

Insulfab also is considering buying two more precision machining firms to help fulfill the 2001 sales goal, McQuiggan said. The company is looking at businesses in the western United States, he said, and expects to make purchases by next year.

The momentum of change should continue to drive the company's success, McQuiggan said.

"We want new ideas," he said. "We need new ideas challenging the status quo. We have tried to generate a spirit of growth, and we intend to stay that way."

Indexing (document details)

Subjects:	Plastics industry, Corporate profiles
Locations:	Spartanburg, SC, US, South Atlantic
Companies:	Insulfab Plastics Inc (**Sic**:3089)
Author(s):	Davis, Kathleen
Publication title:	Spartanburg Herald - Journal. Spartanburg, S.C.: Aug 16, 1998. pg. E1
Source type:	Newspaper
ProQuest document ID:	34003165
Text Word Count	740
Document URL:	http://proquest.umi.com.ezproxy.lapl.org/pqdweb?did=34003165&sid=1&Fmt=3&clientId=13322&RQT=309&VName=PQD

Copyright © 2009 ProQuest LLC. All rights reserved.

BCSA0314784

8

ATTACHMENT 8

1973

NEW JERSEY STATE INDUSTRIAL DIRECTORY

PUBLISHED SINCE 1901

43

BCSA0140273

NURSERY SUPPLIES INC.
447 Market St.
East Paterson, N.J. 07407
Phone: 796-2342
Emp: 6
Plastics
SIC 3079

OZONE CONFECTIONERS BAKERS SUPPLY CO. INC.
55 Bank St.
East Paterson, N.J. 07407
Phone: 791-4444
Emp: 17
Candy
SIC 2071
O/M—C. Palecek

PATHE EQUIPMENT CO., INC.
Sub. of: Walter Kidde & Co., Inc.
16 Lellarts Lane
East Paterson, N.J. 07407
Phone: 796-9341
20,000 Sq. Ft.
Emp: 60
Office: M 4, F 2
Plant: M 54
★Automatic quilting machinery
◆SIC 3552
Ch/B—Fred R. Sullivan
Pr—William V. Codos
Exec/Vp—James X. Kilbridge
VP—George Hellinger
Sec—D.R. Ficcia
Comp—Herbert A. Leibel
R/D—Paul Kuhn

POLYCRAFT EXTRUDERS, INC.
11 Wallace St.
East Paterson, N.J. 07407
Phone: 791-1975
Emp: 15
Polyethylene Film
SIC 3079
Pr—Robert L. Ayers
Sec—John Crowe
Tr—John M. Forrester

PRESTO LOCK CO.
Div. of: Walter Kidde & Co., Inc.
35 Market St.
E. Paterson, N.J. 07407
Phone: 796-6001
Emp: 56
Hardware For Luggage
SIC 3429

PRODUCTION INDUSTRIES CORP.
48 Pine Street
East Paterson, N.J. 07407
Phone: 797-3434
5,000 Sq. Ft.
Emp: 6
Electronic wire
SIC 3357
Pr—E. Schein

QUALITY TUBE & BOX CO., INC.
85 Main Avenue
East Paterson, N.J. 07078
Phone: 796-0280
25,000 Sq. Ft.
Emp: 31
Paper tubes
SIC 2655
Pr—J.E. Scandore
VP—William J. Durkin
Sec—Owen E. Fayne

REL MANUFACTURING CORP.
476 Boulevard
East Paterson, N.J. 07407
Phone: 796-4950
Emp: 104
Injection and custom molding
SIC 3079
Pr—L.A. Fattori
VP—Walter Wagner
VP—A.R. Nierengarden
VP—M. Denofa
Sec—Thomas H. Gassert
S/M—James K. Maloney
P/F—Joseph Cortese

REYNOLDS & REYNOLDS CO.
109 Midland Avenue
East Paterson, N.J. 07407
Phone: 791-3800
60,000 Sq. Ft.
Emp: 138
Office: M 47, F 46
Plant: M 30, F 15
Business forms
SIC 2761
Ch/B—Walter G. Pfeiffer
Pr—Robert Meyers
Exec/Vp—Patrick Strasser
Sec—Earl H. Cosner
Q/M—Richard J. Dennis
S/M—Carl Roeder
P/M—Melvin A. Clark

RICHARDS STEEL FABRICATING CO.
37 Midland Avenue
East Paterson, N.J. 07407
Phone: 797-0300
16,000 Sq. Ft.
Emp: 34
Office: M 4, F 2
Plant: M 28
Steel fabrication
SIC 3441
Pr—C. Catanzariti
Sec—R. Taylor
P/A—F. Severenuk
P/M—R. Jones
P/F—H. Rogers

SAUSVILLE FOODS INC.
17 Chamberlain Avenue
East Paterson, N.J. 07407
Phone: 796-1830
20,000 Sq. Ft.
Emp: 14
Office: M 2, F 2
Plant: M 10
★Baking ingredients and products
◆SIC 2051
Ch/B—Kenneth N. Sausville
Sec—Robert Sausville
O/M—Mary Portelli
Mkt/Dir—John Vandersteen
A/M—Kenneth A. Sausville
T/M—Joanne Deeda
R/D—Sam Brickner
S/D—Simon Acevedo
Ch/Eng—Tom Whitlow
M/M—Adolph Carbo

SOUTHERN ABRASIVES, INC.
8 Paul Kohner Place
East Paterson, N.J. 07407
Phone: 797-3220
10,000 Sq. Ft.
Emp: 17
Office: M 4, F 3
Plant: M 10
Woodworking machinery and conveyor systems
SIC 3553
Ch/B—Paul Brunschwig
Exec/Vp—H. Martin Gordon
VP—Elke A. Gordon
P/A—Douglas Fleischmann
P/F—Hans Haderthauer

STOR-DYNAMICS CORP.
Bloom Rack Div.
99 Main Ave.
East Pasterson, N.J. 07407
Phone: 791-1800
35,000 Sq. Ft., 1.5 Acres
Emp: 35
Office: M 2, F 3
Plant: M 15, F 5
Sheet metal
SIC 3444
Ch/Ex/Off—Milton Bloom
VP—Robert Marcheso
P/F—Charles Haymen

SYNKOTE PAINT COMPANY
144 Van Riper Avenue
East Paterson, N.J. 07407
Phone: 796-4040
5,500 Sq. Ft., 1 Acre
Emp: 12
Epoxies and other specialty chemical coatings.
SIC 2851
Pr—Irwin L. Max
Exec/Vp—Richard E. Max
Sec—Elsa A. Max

U S ARTISTIC MONUMENT CO., INC.
622 Market Street
East Paterson, N.J. 07407
Phone: 796-0340
36,000 Sq. Ft.; 1 Acre
Emp: 11
Office: M 2, F 1
Plant: M 8
Monumenja, granite cutting and polishing
SIC 3281
Pr—John Gregg
VP—Frank Manfredi
VP—Anthony Manfredi
VP—Morris Manfredi
Sec—Albert P. Manfredi

WACO MACHINE CORP.
3 Midland Ave.
East Paterson, N.J. 07407
Phone: 791-2190
Emp: 8
Machine shop
SIC 3599

ZINGARO PRINTING CORP.
21 Summit Ave.
East Paterson, N.J. 07407
Phone: 797-8700
Emp: 8
Printing
SIC 2751

EAST RUTHERFORD
Telephone Area Code—201

Inc.: Mar. 28, 1894
Pop. 1970: 8,536
Elev. (Ft.): 0-140
Area (Sq. Mi.): 4
Net Val. (1972): $143,466,917
Tax Rate per $100 (1972): $2.22
Ratio of Assessed to True Value of Real Property (1972): 118.30%
Fire Insurance Rating: D

AJAX INDUSTRIES, INC.
2 Carlton Avenue
East Rutherford, N.J. 07073
Phone: 933-7961
Emp: 8
Bleaching of cotton
SIC 2261
Pr—Leonard Fried
VP—Edward Weinstein

ALLIED ENVELOPE CO., INC.
P.O. Box 314, 55 Route 20
East Rutherford, N.J. 07073
Phone: 933-4600
20,000 Sq. Ft.
Emp: 35
Office: M 5, F 5
Plant: M 20, F 5
Envelope jobbers
SIC 2642
Pr—J.A. Mccandless
Exec/Vp—R. James Royer
VP—Andrew J. Paretti
P/M—James Whitaker
P/F—Moses Wiley

ANDERS CHEMICAL CORP.
28 Poplar Street,p.O. Box 143
East Rutherford, N.J. 07073
Phone: (201) 939-1700
Emp: 25
Textile printing inks and coatings
SIC 2893
Pr—Richard Hintz
O/M—M. Wright
R/D—Richard Peterson
P/M—Randel van der Heyden

ARROW TOOL & DIE CORP.
117 Herman Street
East Rutherford, N.J. 07073
Phone: 933-6818
Emp: 12
Metal stampings, dies
SIC 3544
Pr—Walter Schffle

ASBESTOS-CEMENT MACHINERY CORP.
61 Paterson Avenue
East Rutherford, N.J. 07073
Phone: 438-8833
Emp: 10
Special machines
SIC 3559
Pr—R. D'Amato

AZTEC PRODUCTS INC.
468 Paterson Ave.
East Rutherford, N.J. 07073
Phone: 935-0010
Emp: 24
Office: M 4, F 4
Plant: M 16
Plating machines, tanks, filters, pumps
SIC 3559

BABEEZ, INC.
2 Carlton Ave.
East Rutherford, N.J. 07073
Phone: 933-7171
Emp: 29
Baby products
SIC 3079

BECTON, DICKINSON & COMPANY
Stanley & Cornelius Sts.
East Rutherford, N.J. 07073
Phone: 939-9000
Emp: 13,000
Medical and hospital supplies
◆SIC 3841

BELL CONTAINER CORPORATION
1 Maple Street
East Rutherford, N.J. 07073
Phone: 438-9000
80,000 Sq. Ft., 4 Acres
Emp: 115
Office: M 6, F 3
Plant: M 117
Corrugated shipping containers
SIC 2653
Ch/B—Edward I. Daspin
Pr—Charles West
Exec/Vp—William Bell
VP—Arthur West
G/M—Richard Brateman
O/M—Abe Levinson
S/M—Theodore Davis

BENTEX MILLS INC.
450 Murray Hill Parkway
East Rutherford, N.J. 07073
Phone: 933-9300
350,000 Sq. Ft., 11 Acres
Emp: 450
Office: M 10, F 40
Plant: M 390, F 10
Knit goods
SIC 2256

BERGEN SHEET METAL WORKS
240 Hackensack Street
East Rutherford, N.J. 07073
Phone: 438-6593
5,000 Sq. Ft.
Emp: 9
Office: M 1
Plant: M 8
Galvanized steel, stainless steel, industrial sheet metal work
SIC 3444
Owner—Philip Reif

BERLIN & JONES CO.
2 East Union Avenue
East Rutherford, N.J. 07073
Phone: 933-5900
Emp: 200
Envelopes
SIC 2642
Pr—Duncan Whyte
VP—Francis A. Connor
Tr—James R. Patterson
Mkt/Dir—Richard L. Higginson
P/M—Vincent J. Vitiello

BLAZER CORP.
400 Paterson Plank Rd.
East Rutherford, N.J. 07073
Phone: 933-1111
Emp: 200
Air conditioning equipment
SIC 3585
Pr—B.V. Blazer
Exec/Vp—M. El Tahry
VP—M. Blazer
Sec—Claire Blazer
Comp—Charles Kerler
T/M—J. Cafaro
R/D—Sylvan R. Hirsch

CARMET COMPANY
Amcarb Division
160 East Union Avenue
East Rutherford, N.J. 07073
Phone: 933-3311
38,000 Sq. Ft., 3 Acres
Emp: 170
Office: M 28, OF 12
Plant: M 112, F 18
★Tungsten carbide dies and wear parts
▲SIC 3544
Pr—C. Avedesian
Comp—J. L. Meigs
G/M—A. Avedesian
S/M—R. Goetz

CHAPIN, CHAS. E. CO., INC.
283 Hackensack Street
East Rutherford, N.J. 07073
Phone: 438-5550
Emp: 50
Carbon graphite products
SIC 3624
Pr—S.G. Chapin

CHEMICAL CORP. OF AMERICA
2 Carlton Ave., P.O. Box 352 Carlton Hill Sta.
East Rutherford, N.J. 07073
Phone: 438-5800
12,000 Sq. Ft., 1 Acre
Emp: 8
Textile chemicals
SIC 2843
Pr—Alan Scher

CHEMICAL DIVISION OF UOP
Div. Of: Universal Oil Products Company
State Highway 17
East Rutherford, N.J. 07073
Phone: 438-7800
Emp: 200
★Chemical intermediates
SIC 2818
Pr—R. A. Moody
VP—D. Friedland
Comp—H. D. Redmond
S/M—A.E. Hoffman
P/A—J.P. Christian
Pers/M—H. C. Friedeman
R/D—M. Dunkel
S/D—W. Meyer
Ch/Eng—W.F. Schroeder
P/Eng—W.L. Lintner

CHEMWOOD CORP.
2 Carlton Ave.
East Rutherford, N.J. 07073
Phone: 933-7722
15,000 Sq. Ft.
Emp: 12
Office: M 1
Plant: M 11
★Polyurethane foam beams and decorative accessories
SIC 3079

COLONIAL PRINTING INK CO. INC.
Div. Of: U.S. Printing Ink Corp.
180 East Union Avenue
East Rutherford, N.J. 07073
Phone: 933-6100
30,000 Sq. Ft., 3 Acres
Emp: 65
★Screen printing ink
SIC 2893
Pr—George Lambert
Exec/Vp—Charles L. Grosslight
VP—Nat Velardi
VP—P. Schaffer
Sec—Mary Lambert
A/M—George L. Van Dillen
T/M—F. Arbate
P/F—Bob Pomponio
S/D—Chester Bart

COURIER-CITIZEN/RUTHCO
Div. Of: Courier Citizen Co.
230 Boiling Springs Avenue
East Rutherford, N.J. 07073
Phone: 935-2555
10,000 Sq. Ft.
Emp: 60
Office: M 30, F 30
Composition and printing
SIC 2751
P/M—George Gianaris

DAWN BIBLE STUDENTS ASSOCIATION
Railroad Avenue
East Rutherford, N.J. 07073
Phone: 438-6421
Emp: 24
Religious book publishing
SIC 2731
Pr—R.J. Krupa
Sec—W.N. Woodworth
Tr—C.R. Weida

DU BOIS CHEMICALS
Div. Of: Chemed Corporation
Du Bois St. & Union Avenue
East Rutherford, N.J. 07073
Phone: 933-2300
121,000 Sq. Ft.
Emp: 99
Office: M 19, F 18
Plant: M 62
Cleaning compounds
SIC 2842

ELK, B.R. & CO., INC.
2 Carlton Avenue
East Rutherford, N.J. 07073
Phone: 933-0245
15,000 Sq. Ft.
Emp: 12
Chemicals and special products
SIC 2899
Pr—B.R. Elk
VP—A. Scher
Sec—R. Kronmon
Tr—F. Scher
S/M—L. Lipari
M/M—J. Strickland

ENGRAVERS SPECIALTIES LABORATORIES
153 Union Ave.
East Rutherford, N.J. 07073
Phone: 438-1150
Emp: 13
Engraving
SIC 3479

FLEXACT MFG. CORP.
62 Railroad Ave., P.O. Box 47
East Rutherford, N.J. 07073
Phone: 933-0199
7,800 Sq. Ft.
Emp: 10
Flexible metal hose
SIC 3599
Pr—Al Douglas
O/M—Charles Hartmann
S/M—Arthur Winter

FLINTKOTE CO., THE
480 Central Avenue
East Rutherford, N.J. 07073
Phone: 438-2800
99,353 Sq. Ft.
Emp: 258
Liquid compounds, coatings and adhesives
SIC 2891
Ch/B—G.J. Pecaro
Ch/Ex—J.A. Thomas
G/M—M. L. Johnson
O/M—W.T. Davidoff
S/M—C.T. Derry
Mkt/Dir—H.F. Davisson
A/M—W. Hoyt
P/A—A.J. ZuHone
T/M—C.H. Flynn
Pers/M—R.W. Henley
P/M—J.S. Guepet
M/M—J. Cordero

FOAM AND PLASTICS DIVISION
Div. of: Tenneco Chemicals, Inc.
13 Manor Drive
East Rutherford, N.J. 07073
Phone: 933-8540
Emp: 150
Office: M 30, F 20
Plant: M 100
★Polyurethane Foam
▲SIC 2821
Comp—D. Perry
G/M—F. Buff
O/M—John Donaldson
Pers/M—S. Harrison
R/D—B. Rudner
P/M—C. McDuffie
Ch/Eng—C. Ferstenberg

GENERAL PRINTING INK CO.
Div. of: Sun Chemical Corp.
390 Central Avenue
East Rutherford, N.J. 07073
Phone: 438-4040
76,000 Sq. Ft.
Emp: 130
Office: M 39, F 13
Plant: M 78
Printing and lithographing inks
SIC 2893
Comp—C. J. Byrnes
G/M—T. V. Morris
O/M—D. Jorgensen
S/M—J. Cotter
P/A—Peter J. Vincelli
P/M—J.J. Del Pizzo

GLAMORISE FOUNDATIONS, INC.
321 Main Street
East Rutherford, N.J. 07073
Phone: 939-1912
Emp: 60
Foundation garments
SIC 2342
Sec—S. Rosner

GLEN ROCK KNITTING MILLS
Div. of D.H.J. Industries Inc.
868 Paterson Plank Road
E. Rutherford, N.J. 07073
Phone: 939-6440
Emp: 84
Contract knitting
SIC 2256

GRAPHIC ARTS FINISHING, INC.
74-78 Paterson Ave.
East Rutherford, N.J. 07073
Phone: 935-6820
Emp: 20
Book Binding
SIC 2789

GRAPHIC PLATE GRAINING CO. INC.
240 Paterson Plank Rd.
East Rutherford, N.J. 07073
Phone: 939-1874
Emp: 8
Plate graining
SIC 2793

GROVE STAMPING & MFG. CO.
366 Grove Street
East Rutherford, N.J. 07073
Phone: 438-2700
8,500 Sq. Ft.
Emp: 17
Office: M 1, F 1
Plant: M 11, F 4
Metal stamping
SIC 3461
Pr—Sal Chiappone
P/A—D. Chiappone

HETTINGER ELECTRIC MFG. CO.
10-20 Winter Pl.
East Rutherford, N.J. 07073
Phone: 438-5444
6,000 Sq. Ft.
Emp: 15
Office: M 2, F 3
Plant: M 7, F 3
★Electrical panels and switches
SIC 3613

HOBOKEN WOOD FLOORING CORP.
100 Willow Street
East Rutherford, N.J. 07073
Phone: 933-9700
20,000 Sq. Ft., 1 Acre
Emp: 13
Office: M 2, F 2
Plant: M 9
Prefinished and unfinished oak flooring
◆SIC 2431
Pr—Elinor J. Sakosits
Ch/Ex/Off—Joseph J. Sakosits
Sec—John J. Sakosits
O/M—Mildred Lefkowitz

INDUSTRIAL SERVICE CO.
61 Paterson Avenue
East Rutherford, N.J. 07073
Phone: 438-8833
Emp: 16
Machine shop jobbing and repair
SIC 3599
Partners:
R.A. D'Amato
H.M. Brown

INSULFAB PLASTICS, INC.
160 Union Ave.
East Rutherford, N.J. 07073
Phone: 939-7393
25,000 Sq. Ft.
Emp: 104
Office: M 10, F 11
Plant: M 76, F 7
Thermoset and thermolaminate plastics
SIC 3079
Pr—Frank J. Hanus, Jr.
Exec/Vp—J.G. Nemeth
VP—W. C. Moore
VP—F. Klinck
VP—M.E. McGuire
Comp—R. Reidenauer
O/M—Craig Heard
P/A—Charles Pauwels
T/M—J. Matros
P/M—M. Mirando
S/D—H. Voelkner
Ch/Eng—A. Scheidelar
P/Eng—A. Gambino

J & M KNITTING MILLS
156 Orchard St.
East Rutherford, N.J. 07073
Phone: 935-3141
Knitting Mill
SIC 2259

K L M MECHANICAL CONTRACTORS INC.
259 Hackensack St.
East Rutherford, N.J. 07073
Phone: 933-8440
Emp: 15
Sheet metal
SIC 3444

LAFAYETTE SPECIALTY LABORATORIES
153 Union Ave.
East Rutherford, N.J. 07072
Phone: 438-1150
Emp: 8
Pantograph machine engraving
SIC 3479
Pr—J. Lombardi

LAMINAC
Div. Of: Knitbrook Inc.
418 Route No. 20
East Rutherford, N.J. 07073
Phone: 933-8180
90,000 Sq. Ft.
Emp: 170
Lamination of textiles and plastics
SIC 3079
Pr—Harry Montesinos
VP—Marvin Marks
Sec—John Avery
O/M—Dorothy Hilsky
P/A—S. Prystauk
T/M—Guy Orlanis

LO GATTO BOOKBINDING CO.
396 Paterson Ave.
East Rutherford, N.J. 07073
Phone: 438-4344
Bookbinding
SIC 2789
Owner—M. Lo Gatto

LUSTRA LIGHTING
I T T Lamp Division
180 Manor Rd.
East Rutherford, N.J. 07073
Phone: 935-3700
135,000 Sq. Ft.
Emp: 120
Office: M 42, F 78
Lighting
SIC 3641
Comp—A. Beane
G/M—J. Briody
Mkt/Dir—H. Chambers
A/M—J. Borsh
P/R—M. Lave
P/A—B. Kraus

MACHINED SHAPES, INC.
1 Maple Road
East Rutherford, N.J. 07073
Phone: 438-8600

Emp: 30
Fabricated metal products
SIC 3499
Pr—J. May

MARATHON ENTERPRISES INC.
86 East Union Ave.
E. Rutherford, N.J. 07073
Phone: 935-3330
Emp: 30
Frankfurter and hamburger rolls
SIC 2051

MARIJON DYEING & FINISHING CO., INC.
219 Murray Hill Parkway
East Rutherford, N.J. 07073
Phone: 933-9770
27,000 Sq. Ft.
Emp: 66
Office: M 2, F 4
Plant: M 60
Dyeing and finishing piece goods
SIC 2262
Pr—Jasper Maltese
Sec—Harriet Russalesi

MATHESON GAS PRODUCTS
Div. of: Will Ross, Inc.
932 Paterson Plank Rd., P.O. Box 85
East Rutherford, N.J. 07073
Phone: 933-2400
9,000 Sq. Ft.
Emp: 222
Office: M 50, F 80
Plant: M 92
★Compressed gases & gas regulating equipment, laboratory chemicals
▲SIC 2813
Pr—A.L. Mossman
VP—R. Sterrett
VP—Morton Gilbert
Comp—Paul Foley
S/M—Joe Richerts
P/A—C. Miele
T/M—A. Michael Laido, Jr.
Pers/M—Len Leimgruber
P/M—Chester Kuduk
P/Eng—Joseph Greene

MAYFAIR INFANTS WEAR CO. INC.
11 Metro Blvd.
East Rutherford, N.J. 07073
Phone: 939-1422
35,000 Sq. Ft.
Emp: 40
Infants' wear
▼SIC 2369
Pr—MORRIS E. TAWIL
Pr—Morris E. Tawil
Ch/Ex/Off—Fred Tawil
Exec/Vp—Ted Tawil
VP—Ike Tawil
VP—Jack Tawil

MCGONEGAL MFG. CO., THE
P.O. Box 133, Railroad Ave. & Mozart St.
East Rutherford, N.J. 07073
Phone: 438-2313
50,000 Sq. Ft.
Emp: 10
Lathe Grinders
SIC 3545
Partners:
Elton S. Mcgonegal
Anna R. Mcgonegal
O/M—Herman C. Renz
S/M—Fred R. Vogel Jr.

MEEHAN-TOOKER INC.
Sub. Of: John Blair & Co.
55 Madison Circle Dr.
East Rutherford, N.J. 07073
Phone: 933-9600
160,000 Sq. Ft., 4 Acres
Emp: 300
Commercial lithography
SIC 2752
Pr—Jerry L. Greenberg
Comp—William. Oellrich
G/M—Robert H. Smith, Jr.
P/A—Jerry Roffer
T/M—William Glanzberg
Pers/M—Carmen Ruiz
P/M—Joseph Wallach
P/Eng—Angelo Hagsanon
M/M—Maynard Liddle

MOLDIECO PLASTICS PRODUCTS INC.
2 Carlton Ave.
E. Rutherford, N.J. 07073
Phone: 438-5277
Emp: 40
Office: M 2, OF 1
Plant: M 25, F 12
Plastic products
▼SIC 3079
Pr—William Yuan
VP—Adolfo Covelli
Sec—Yi Fu Chen
O/M—Dorothy Saqui

PERMA-LINED
Div. Of: Silfka Fabrics
Paterson Ave. & Oak St.
East Rutherford, N.J. 07073
Phone: 933-8555
Emp: 125
Plant: M 125
Textile bonding
SIC 2299
G/M—Isidor Blum
P/A—Linda Mandelzman
P/M—Jack Nattini
P/Eng—Leonard Gargliano

PLASTIC MOLD TOOL & DIE CO., INC.
1 Maple Street
East Rutherford, N.J. 07073
Phone: 939-7757
12,500 Sq. Ft.
Emp: 41
Molds for plastics
SIC 3544
Pr—Joseph A. Ogando
Sec—Carl Leschinski

PORTA-DISPLAY, INC.
132 Union Avenue
East Rutherford, N.J. 07073
Phone: 939-8612
26,000 Sq. Ft.
Emp: 20
Office: M 1, F 4
Plant: M 13, F 2
Convention exhibit booths
SIC 3993
Pr—Madge Margaritis Kruse
Sec—Helen M. Cameron
Tr—George C. Kruse
P/M—Nicholas Giaritta

PUTNAM'S, G.P. SONS
390 Murray Hill Pkwy.
East Rutherford, N.J. 07073
Phone: 933-9292
50,000 Sq. Ft., 4 Acres
Emp: 150
Book publishers
SIC 2731
Pr—Walter J. Minton
Exec/Vp—John R. Dodds
VP—Victor C. Thaller
VP—William M. Thomas
Sec—Robert W. Copp
Comp—Kurt W. Wagner
G/M—Raymond E. Ulrich

ROYAL KITCHENS, INC.
536 Paterson Plank Road
East Rutherford, N.J. 07073
Phone: 939-0177
Emp: 15
Wooden kitchen cabinets
SIC 2511
Pr—Frank Robinson
Exec/Vp—Jerry Carucci
VP—Onofrio P. Carucci

ROYCE CHEMICAL CO.
17 Carlton Ave.
East Rutherford, N.J. 07073
Phone: 438-5200
125,000 Sq. Ft.
Emp: 130
Office: M 20, F 16
Plant: M 92, F 2
★Industrial chemicals, rubber and textile industries
SIC 2819
Ch/B—Albert J. Royce, Sr.
Pr—Albert J. Royce, Jr.
Exec/Vp—Howard C. Royce
VP—Richard L. Jones
Sec—A.B. Hall
Comp—William Donnellon
G/M—A. J. Royce, III
P/A—Mildred Williams
T/M—Lyle Grosmann
Pers/M—William Kingston
R/D—Herman Nelson
P/M—John Maziarsky
S/D—Don French
Ch/Eng—Carl Brennan
P/Eng—Howard Horn
M/M—John Powell

RUTHERFORD MACHINERY CO.
Div. of: Sun Chemical Corp.
401 Central Avenue
East Rutherford, N.J. 07073
Phone: 933-1200
84,000 Sq. Ft.
Emp: 187
Office: M 30, F 12
Plant: M 125
Lithographic machinery and equipment
◆SIC 3555
Pr—Norman Alexander
Exec/Vp—Edward Barr
VP—M. Fischer
Sec—B. Jaffe
Tr—J. Craig
Comp—Robert Wirth
G/M—Dennis Libutti
O/M—Ursula Stevens
S/M—William Verge
P/A—S. Stefanski
T/M—William Sloan
P/M—Richard Soren

SABIN ROBBINS PAPER CO.
80 Willow St.
East Rutherford, N.J. 07073
Phone: 935-0575
60,000 Sq. Ft.
Emp: 23
Office: M 13, F 1
Plant: M 9
Paper
SIC 2621

SCHNEIDER PRESS INC.
55 Madison Circle Dr.
East Ruthford, N.J. 07073
Phone: 933-9600
Emp: 55
Printing
SIC 2752

SCHOLL, INC.
235 Murray Hill Parkway
East Rutherford, N.J. 07073
Phone: 933-0600
50,000 Sq. Ft., 2 Acres
Emp: 67
Office: M 4, F 37
Plant: M 24, F 2
Footwear and foot care remedies
SIC 3842

SOMMERS PLASTIC PRODUCTS
Div. Of: Whittaker Corp.
East Rutherford Industrial Park
East Rutherford, N.J. 07073
Phone: 933-1400
40,000 Sq. Ft.; 3.25 Acres
Emp: 60
Office: M 25, F 15
Plant: M 20
Vinyl plastic sheeting, bookbinding, advertising specialties
◆SIC 2821
Comp—Armin Fried
G/M—Saul Altman
O/M—Ruth Mcinnich
S/M—Samuel Matlin
P/A—Eugene Kolk
T/M—P. Benevento
P/M—Jack Reddy
P/F—Manuel Silva

STANCO ELECTRIC COMPANY
161 Hackensack Street,p.O. Box 94
East Rutherford, N.J. 07073
Phone: 939-9055
16,500 Sq. Ft.
Emp: 10
Office: M 2, F 1
Plant: M 7
Electric motors and controls
SIC 3621
Owner—Joseph Barbiero

STAR-GLO RUBBER MFG. INC.
1 Carlton Ave.
East Rutherford, N.J. 07073
Phone: 939-8162
62,000 Sq. Ft., 3 Acres
Emp: 98
Office: M 5, F 3
Plant: M 78, F 12
Custom molded precision rubber parts for industry
SIC 3069
Pr—J. R. Starita
Exec/Vp—A. Olivarri
VP—D. O'Brien
VP—J. Markert
VP—C. Starita
Sec—Elaine B. Diorio
Comp—W. Hartley
P/A—A. Broker
S/D—R. Griffin
Branch
Lorrainn Rubber
50 W. Hunter St.
Maywood, N.J.

STAYNE MEDICAL INC.
480 Paterson Avenue
East Rutherford, N.J. 07073
Phone: 939-0670
60,000 Sq. Ft.
Emp: 75
★Medical instruments and apparatus
◆SIC 3841
Pr—Alfred E. Rancke
Comp—Gerald Hirschberg
T/M—Raymond Milne
P/F—Thomas Vilardo
Ch/Eng—Ferenc Jambor

SUN CHEMICAL CORP.
390 Central Ave.
East Rutherford, N.J. 07073
Phone: 438-4040
Emp: 155
Printing inks
SIC 2893

TOP NOTCH METAL FINISHING CO.
Route 20
East Rutherford, N.J. 07073
Phone: 438-2440
13,000 Sq. Ft., 15 Acres
Emp: 31
Office: F 1
Plant: M 30
Plating
SIC 3471
Partners:
Charles A. Scaglione
Joseph A. Scaglione

U.S. COMMERCIAL BODY BUILDING COMPANY
788 Paterson Avenue
East Rutherford, N.J. 07073
Phone: 777-5427
Emp: 7
Truck and bus bodies
SIC 3713
Pr—Carl Trebbing

UNITED CARNABY MILLS, INC.
25 East Union Ave.
East Rutherford, N.J. 07073
Phone: 935-0020
Emp: 175
Knitted fabrics
SIC 2256

UNITED STATES PRINTING INK CORP.
Sub. of Millmaster Onyx Corp.
343 Murray Hill Parkway
East Rutherford, N.J. 07073
Phone: 933-7100
50,000 Sq. Ft.
Emp: 107
★Printing inks
SIC 2893
Ch/B—John A. Seixas
Pr—Donald H. Seixas
VP—Morris Friedland
VP—R. W. Schmidt
VP—Neal A. Fishkin
Sec—Matthew J. Kane
O/M—Emma Mirto
Mkt/Dir—R. L. Stearns
P/M—John Hanlon
Ch/Eng—Samuel Leiner

BCSA0140276

M/M—John McLean

WEARBEST WEAVING CORP.
2 Carlton Ave.
East Rutherford, N.J. 07073
Phone: 438-9229
Emp: 9
Broad woven fabrics
SIC 2221

ZENITH PRECISION, INC.
836 Paterson Avenue
East Rutherford, N.J. 07073
Phone: 933-8640
4,000 Sq. Ft.
Emp: 23
Precision machined parts
SIC 3599
Pr—W.W. Struck
VP—D. Struck
Sec—J. Malachuk
Tr—O. Malachuk

EDGEWATER
Telephone Area Code—201

Inc.: Nov. 8, 1889
Pop. 1970: 4,987
Elev. (Ft.): 0-110
Area (Sq. Mi.): 0.07
Net Val. (1972): $62,446,680
tax Rate per $100 (1972): $2.77
Ratio of Assessed to True Value of Real Property (1972)1: 73.12
Fire Insurance Rating: B

BURKLEY LEATHER CO., INC.
River Rd. & Garden Pl.
Edgewater, N.J. 07020
Phone: 945-7300
Emp: 46
Leather tanning
SIC 3111

CAROLACE EMBROIDERY CO., INC.
342 River Road
Edgewater, N.J. 07020
Phone: 945-2181
60,000 Sq. Ft.
Emp: 150
Office: M 14, F 12
Plant: M 75, F 50
★Laces and embroideries
◆SIC 2397
Ch/B—Leonard Rubin
Pr—Bernard Mann
Exec/Vp—Leonard Rubin
VP—Morris Esposito
Sec—Joseph Questel
Comp—Oscar Machlis
G/M—Sol Arian
O/M—Herbert Young
S/M—Sidney Weinstein
Mkt/Dir—Jerry Alvarez
T/M—Robert Gennett
R/D—Dominick Dibisceglier
P/M—Morton Newberg
P/F—Frank Creighton
S/D—Dominick Trentacosta
Ch/Eng—Cris Felle
P/Eng—Joseph De Nosio
M/M—Joseph Janolis
Branch Plant:
Guttenberg, N.J.

CELOTEX CORPORATION
Div. of: Jim Walter Corp.
1 River Road
Edgewater, N.J. 07020
Phone: 941-2300
800,000 Sq. Ft. 55 Acres
Emp: 210
Office: M 49, OF 9
Plant: M 152
Gypsum wallboard, urethane roof insulation, asphalt
SIC 3275
R/D—J.M. Ciskowski
P/M—R.E. Stetson
P/Eng—N. Koretz

CROWN NATIONAL INDUSTRIES
Garden Place and River Road
Edgewater, N.J. 07020
Phone: 943-1200
55,000 Sq. Ft.; 6 Acres
Emp: 120
Wire display racks
SIC 3481
Pr—Max Schuster
Exec/Vp—Michael H. Schuster
Sec—Michael Thal
G/M—Joel Schuster
T/M—Mario Matarazzo
P/F—Joseph Taverna

DISPLAYMASTERS, INC.
354 Undercliff Avenue
Edgewater, N.J. 07020
Phone: 943-4224
Emp: 20
Advertising displays
SIC 3993
Pr—J.C. Roll

F M C CORP
Coffin Turbo-Pump Div.
326 Dean St.
Englewood, N.J. 07631
Phone: 568-4700
29,000 Sq. Ft., 1.5 Acres
Emp: 93
Office: M 26, F 20
Plant: M 46
Boiler feed pumps
▲SIC 3561
G/M—C.D. Stafford
O/M—S.T. McQuillen
S/M—R.A. Bocksel
P/A—T.J. Wrocklage
P/M—W.T. Bradley
Ch/Eng—R.G. Crawford

FAESY & BESTHOFF, INC.
143 River Road
Edgewater, N.J. 07020
Phone: 945-6200
60,000 Sq. Ft., 1 Acre
Emp: 24
Industrial and agricultural chemicals
SIC 2879
Pr—Silas Besthoff
VP—Anthony W. Bestoff
Sec—Michael Henley

FORMIT TOOL & DIE CO.
824 River Road
Edgewater, N.J. 07020
Phone: 943-8981
Emp: 9
Machine tool accessories
SIC 3545
Owner—A.J. Dipietro

GORLYN PLASTICS CORP.
840 River Road
Edgewater, N.J. 07020
Phone: 945-6918
Emp: 15
Plastic buttons
SIC 3963
Pr—S. Gorlyn

HILLS BROS. COFFEE, INC.
835 River Road
Edgewater, N.J. 07020
Phone: 943-6300
Emp: 250
Coffee roasters
◆SIC 2095
G/M—D.D. Morton

ILVAPLAST USA INC.
280 River Rd.
Edgewater, N.J. 07020
Phone: 941-2050
Emp: 11
Plastics
SIC 3079

INDUSTRIAL DEVICES, INC.
982 River Road
Edgewater, N.J. 07020
Phone: 224-4700
20,000 Sq. Ft.
Emp: 170
Office: M 5, F 10
Plant: M 30, F 125
Indicator lights, voltage testers
SIC 3641
Pr—Bernard Schnoll
VP—Yona Goren
VP—Ted Kavsen
Sec—Michael Giani
Tr—Joseph Hammerman
Comp—Michael Lanes
O/M—Tom Tansey
A/M—John Spitzer
P/A—Mike Giani
P/M—Angelo Sireci
Ch/Eng—Joseph Ceder

LEVER BROTHERS CO., INC.
233-277 River Rd.
Edgewater, N.J. 07020
Phone: 945-2400
36 Acres
Emp: 600
Household and industrial soaps, detergents, margarine
SIC 2841, 2096, 2844
R/D—William Holiday

LINMARK SCHIFFLI EMBROIDERY
340-A River Road
Edgewater, N.J. 07020
Phone: 943-2435
Emp: 20
Schiffli embroideries
SIC 2397
Pr—I. Rubin

LUSTRELON, INC.
1 River Rd.
Edgewater, N.J. 07020
Phone: 943-1485
Lighting fixtures
SIC 3642
Pr—Harold Schiller
VP—David Goldberg

MARITEC CORPORATION
860 River Road
Edgewater, N.J. 07020
Phone: 941-2030
10,000 Sq. Ft.
Emp: 10
Marine chemicals
▲SIC 2899
Pr—T. Silverman
Sec—E. Vasconi
S/M—R. F. O'Boyle

METROMODULAR SYSTEMS INC.
700 River Rd
Edgewater, N.J. 07020
Phone: 945-6655
Emp: 80
Precast concrete
SIC 3272

OCTAGON PROCESS, INC.
596 River Road
Edgewater, N.J. 07020
Phone: 945-9400
157,000 Sq. Ft., 8 Acres
Emp: 75
Office: M 15, F 10
Plant: M 50
★Chemicals, cleaning compounds, solvents, oils, greases and insecticides
◆SIC 2842
Pr—Harold Rosenberg
Exec/Vp—Chester A. Maas
Sec—Joan Benvenuti
Tr—Sol Rosenberg
S/M—Chester Maas
T/M—William Gillen
R/D—Saul Charms
P/Eng—Lee Liebmann

QUEEN ANNE MILLS, INC.
1034 River Road
Edgewater, N.J. 07020
Phone: 945-1930
6,000 Sq. Ft.
Emp: 8
Knitted fabrics
SIC 2256
Pr—F.H. Stanek

SCHWARZ, H., LEATHER CO., INC.
River Road and Garden Place
Edgewater, N.J. 07020
Phone: 945-7300
40,000 Sq. Ft.
Emp: 68
Office: M 4, F 5
Plant: M 50, F 9
Finished leathers
SIC 3111
Pr—Herbert Schwarz
Affiliate Burkley Leather Co., Inc.-Same Address

SPENCER KELLOGG
Div. Of: Textron, Inc.
143 River Rd.
Edgewater, N.J. 07020
Phone: 945-1500
Processed vegetable oils
SIC 2093
Pr—Robert L. Terrill
Exec/Vp—Howard A. Scheu
VP—Dan K. Farstad
VP—Robert C. Hussong
VP—George J. Hutzler
VP—Henri E. Meylan
Comp—Paul E. Raimondo
O/M—Walter Pustay
P/M—Merlin Brockway
M/M—Joe Saltamach

SYNTHATRON CORPORATION
150 River Rd.
Edgewater, N.J. 07020
Phone: 941-1711
15,000 Sq. Ft., 1.5 Acres
Emp: 8
Gases and chemicals
▲SIC 2813
Ch/B—Hillard Blanck
Pr—Martin Prince (Dr)
P/M—Gregorio Tarancon

VEE BEES, INC.
280 Undercliff Avenue
Edgewater, N.J. 07020
Phone: 945-4476
Emp: 8
Fur goods
SIC 2371
Pr—J. Vandenaeghe

VENUS CONTROLS CORP.
840 River Rd.
Edgewater, N.J. 07020
Phone: 945-5772
4,000 Sq. Ft., 3/4 Acres
Emp: 8
Plant: M 8
Food machinery
SIC 3551
Pr—Harry W. Victor
Sec—Leonora Victor
P/A—L. Messinger

VIRGINIA LEE LACES, INC.
340 River Road
Edgewater, N.J. 07020
Phone: 943-1111
Emp: 25
Embroidery
SIC 2397
Pr—F. Creighton

EMERSON
Telephone Area Code—201

Inc.: Apr. 8, 1903
Pop. 1970: 8,428
Elev. (Ft.): 20-182
Area (Sq. Mi.): 2.6
Net Val. (1972): $59,336,034
Tax Rate per $100 (2972): $5.35
Ratio of Assessed to True Value of Real Property (1972): 67.16%
Fire Insurance Rating: D

DEBRA ANN MILLS, INC.
47 Columbia Avenue
Emerson, N.J. 07630
Phone: 265-6610
Emp: 10
Knit goods
SIC 2221

JAY COMPANY
45 Emerson Plaza, East
Emerson, N.J. 07360
Phone: 262-6454
Emp: 8
Apparel findings
SIC 2396

JOB RITE TOOL & MACHINE, INC.
24 Lozier Avenue
Emerson, N.J. 07630
Phone: 261-5043
Emp: 10

ATTACHMENT 9

HarrisInfoSource™

Features:

- Company profiles
- Key contacts with titles
- Street and mailing addresses
- Extended ZIP Codes
- Phone, fax and toll free numbers
- Headquarters location and phone
- Employment figures
- Import/Export
- Product description
- Annual sales
- Facility size

...and much more

OFFICIAL New Jersey Manufacturers Directory™ 98

Published in cooperation with the New Jersey Department of Commerce & Economic Development

New Jersey
WHAT A DIFFERENCE A STATE MAKES

BCSA0274598

East Rutherford

Publisher: Richard Tal
EMP: 2 **EST:** 1994 **SQ. FT:** 1,500
EST. SLS: Under $500K
Privately Owned
SIC: 2752 2791 2396 2761 2759 Offset, screen & laser printing: souvenir journals, business cards, programs, stationery, announcements & invitations; desktop publishing

(G-2045)
VALIANT TOOL CO
30 N 15th St (07017-5156)
PO Box 432 (07019-0432)
Phone 973 678-3361
FAX: 973 678-2428
President: William Billand
Vice Pres: Vincent Riggi
▼EMP: 7 **EST:** 1964
SQ. FT: 10,000
EST. SLS: $500-999K
Privately Owned
SIC: 3469 Electronic miniature coining & stampings

(G-2046)
VALLEY DIE CUTTING CO INC
238 Amherst St (07018-2507)
Phone 973 672-4876
FAX: 973 672-2793
Owner: John Deyer
EMP: 20 **EST:** 1960
SQ. FT: 15,000
EST. SLS: $1MM-4.9MM
Privately Owned
SIC: 2671 2621 2679 2631 2675 Paper: chip board, corrugated, packaging & converting

(G-2047)
WRAPS INC
810 Springdale Ave (07017-1298)
Phone 973 673-7873
FAX: 973 673-2240
President: Ralph V Barone
General Mgr: Mike Mickulis
Sales Mgr: Brian Guidera
Plant Mgr: Don Dechert
EMP: 26 **EST:** 1946
EST. SLS: $1MM-4.9MM
Privately Owned
SIC: 3089 Plastic prdts

(G-2048)
WRIGHT & LATO INC
800 Springdale Ave (07017-1299)
Phone 973 674-8700
FAX: 973 674-6964
President: Greg Clapper
Controller: Brian Stemmer
EMP: 50
EST. SLS: $5MM-9.9MM
Privately Owned
SIC: 3911 Precious jewelry

(G-2049)
YEOMANS, WILLIAM H INC
127 Brighton Ave (07017-1706)
Phone 973 674-9090
FAX: 973 674-7207
President: William H Yeomans
Vice Pres: Brent Yeomans
EMP: 10 **EST:** 1969 **SQ. FT:** 2,000
EST. SLS: $1MM-4.9MM
Privately Owned
SIC: 2431 Custom millwork

EAST RUTHERFORD
Population - 7,902
Bergen County

(G-2050)
A J ENVELOPE & PRINTING CO INC
1 Maple St # 2 (07073-1202)
Phone 201 804-7767
FAX: 201 804-6323
President: James Andersen
EMP: 4 **EST:** 1991
EST. SLS: Under $500K
Privately Owned
SIC: 2759 2761 Specialty printing; envelopes, letterheads & business forms

(G-2051)
ABBOTT SCREEN PRINT PROCESS
153 Orchard St (07073-1903)
Phone 201 933-5455
FAX: 201 804-0140
Owner: Steven Bornemann
EMP: 5 **EST:** 1940
EST. SLS: $500-999K
Privately Owned
SIC: 2396 2759 2752 3993 Textile, plastic, cardboard screen printing, decals & point of purchase displays

(G-2052)
ACCUSCREEN INC
26 Oak St # B (07073-1204)
Phone 201 531-9800
FAX: 201 531-9744
Owner: Tom Haemmerle
EMP: 1
EST. SLS: Under $500K
Privately Owned
SIC: 2759 2396 Screen printing & textile screen printing

(G-2053)
ALEX'S CUSTOM KITCHENS INC
824 Paterson Ave (07073-1054)
Phone 201 933-9359
Owner: Alex Eliages
EMP: 3
EST. SLS: Under $500K
Privately Owned
SIC: 2434 Custom wood & laminated kitchen cabinets

(G-2054)
AMBIX LABORATORIES
Div Organics Corp Of America
210 Orchard St (07073-1913)
PO Box 425 (07073-0425)
Phone 201 939-2200
FAX: 201 939-7090
President: Alvin Goren
Vice Pres: Eli Gorenberg
▼EMP: 30 **EST:** 1968
EST. SLS: $10MM-24.9MM
Privately Owned
SIC: 2844 2834 Cosmetic, health & beauty aids, nutritional supplements & herbal tonics

(G-2055)
AMERICAN INDUSTRIAL RESEARCH
1 Madison St (07073-1672)
Phone 973 778-1080
Natl Toll Free: 800 229-1080
FAX: 973 778-9105
Owner: Paul Beebe
Plant Foreman: Ray Gelok
▼EMP: 8 **EST:** 1964
SQ. FT: 5,500
EST. SLS: $1MM-4.9MM
Privately Owned
SIC: 2992 Indl lubricants

(G-2056)
ARROW TOOL & DIE CORP
117 Herman St (07073-1218)
Phone 201 933-6699
FAX: 201 933-2044
President: Walter Scheffler
EMP: 4 **EST:** 1960
EST. SLS: Under $500K
SIC: 3469 3544 Metal stampings; tool & die

(G-2057)
ARTMARK MOLD & TOOL CORP
742 Paterson Ave (07073-1028)
Phone 201 935-3377
President: Ted Ura
EMP: 10 **EST:** 1990 **SQ. FT:** 6,500
EST. SLS: $500-999K
Privately Owned
SIC: 3544 Custom plastic injection molds

(G-2058)
ASTOR BERNING CORP
330 Murray Hill Pkwy (07073-2111)
PO Box 421 (07073-0421)
Phone 201 939-4550
FAX: 201 939-4557
Vice Pres: Karl Pattberg
General Mgr: Carl Sisco
◆EMP: 8 **EST:** 1974
EST. SLS: $500-999K
Privately Owned
SIC: 3965 2387 Covered buttons, buckle parts & belt materials

(G-2059)
BALSCO CORRUGATED BOX CO INC
132 Union Ave (07073-1998)
Phone 973 546-0500
FAX: 201 507-8363
President: Vincent Scolaro
EMP: 6 **EST:** 1963 **SQ. FT:** 15,000
EST. SLS: $1MM-4.9MM
Privately Owned
SIC: 2653 Corrugated boxes

(G-2060)
BERLIN & JONES CO INC
2 E Union Ave (07073-2171)
Phone 201 933-5900
FAX: 201 933-4242
President: Richard L Higginson
Senior V P: Vincent Vitiello
V P Mfg: Dan Moran
V P Sales: Richard B Lipman
Treasurer: Walter Lypowy
EMP: 260 **EST:** 1843
EST. SLS: $25MM-49.9MM
Privately Owned
SIC: 2677 Envelopes

(G-2061)
BLOOMFIELD DRAPERY CO INC
948 Paterson Ave (07073-1041)
Phone 973 777-3566
FAX: 973 777-4402
President: Steve Gold
EMP: 9 **EST:** 1934
EST. SLS: $500-999K
Privately Owned
SIC: 2391 Draperies & stage curtains

(G-2062)
C C A INDUSTRIES INC
200 Murray Hill Pkwy (07073-2113)
PO Box 7486 (07073-7486)
Phone 201 330-1400
Natl Toll Free: 800 524-2720
FAX: 201 935-0675
Ch of Bd: Ira Berman
President: David Edell
Vice Pres: Dunnan Edell
Purch Agent: Dale Hrycak
Persnl Mgr: John Bingman
Plant Spvr: Diego Torres
◆EMP: 100 **EST:** 1974
EST. SLS: $25MM-49.9MM
Privately Owned
SIC: 2844 Health & beauty aids

(G-2063)
C Q CORP
480 Paterson Ave (07073-1281)
PO Box 355 (07073-0355)
Phone 201 935-8488
FAX: 201 935-7211
Owner: Cyrus Shahrzad
Plant Mgr: Robert Gordon
EMP: 25 **EST:** 1975
SQ. FT: 35,000
EST. SLS: $1MM-4.9MM
Privately Owned
SIC: 2396 Sportswear & bed linen screen printing

(G-2064)
CAMBREX CORP (HQ)
1 Meadowlands Plz # 15th (07073-2100)
Phone 201 804-3000
FAX: 201 804-9852
Ch of Bd: Cyril Baldwin Jr
President: James A Mack
CFO: Douglas H MacMillan
Vice Pres: Claes Glassel
V P Admin: Steven M Klosk
V P Bus Dvlpt: Salvator J Guccione
V P Corp Dvlpt: Peter Tracey
V P Tech: Ronald D Carroll
EMP: 35 **EST:** 1982
Publicly Owned
SIC: 2899 Specialty chemicals

We can provide you with over 150 different information products
CALL 800-[illegible]-5900

(G-2065)
CAPITOL FOAM PRODUCTS
75 E Union Ave (07073-2127)
Phone ..... 201 933-5[illegible]
Natl Toll Free: 800 526-4707
FAX: 201 933-7684
President: Bart Krupp
EMP: 50 **EST:** 1965
EST. SLS: $5MM-9.9MM
Privately Owned
SIC: 3086 Foam

CHEMICAL CORP OF AMERIC[illegible]
EAST RUTHERFORD NJ Mov[illegible]
To Chester NY

(G-2066)
COATES SCREEN INC (HQ)
180 E Union Ave (07073-2124)
Phone ..... 201 933-6[illegible]
Natl Toll Free: 800 274-4657
FAX: 201 933-3361
President: Barry Marshall
General Mgr: Joe Halter
Sales Mgr: Glenn Olsen
Marketing Mgr: Bob Nersesian
Purch Agent: Mike Twidle
▼EMP: 100 **EST:** 1955
Privately Owned
SIC: 2893 Screen printing inks

COLONIAL PRINTING INC,
EAST RUTHERFORD NJ See
Coates Screen Inc

(G-2067)
COMPU-SORT SYSTEMS INC
51 Clinton Pl (07073-1323)
Phone ..... 201 460-0[illegible]
President: Vincent Vulcano
EMP: 6 **EST:** 1960
EST. SLS: $1MM-4.9MM
Privately Owned
SIC: 3577 Hardware computer sorting eqpt

(G-2068)
D & M SHEET METAL CO INC
430 Central Ave (07073-1214)
PO Box 245 (07073-0245)
Phone ..... 201 939-6[illegible]
FAX: 201 939-8038
President: Mark Mihal
EMP: 40 **EST:** 1971
EST. SLS: $1MM-4.9MM
Privately Owned
SIC: 3444 Sheet metal fabricating

(G-2069)
D & R MACHINE & TOOL INC
788 Paterson Ave (07073-1030)
Phone ..... 973 473-[illegible]
FAX: 973 473-9785
President: Stanley Delekta
EMP: 5 **EST:** 1987
EST. SLS: Under $500K
Privately Owned
SIC: 3599 Machine shop: general machining

(G-2070)
D' ESPOSITO'S, R PRINTING
151 Park Ave (07073-1819)
Phone ..... 201 804-[illegible]
FAX: 201 804-7756
Owner: Richard D'Esposito
EMP: 2 **EST:** 1991
EST. SLS: Under $500K
Privately Owned
SIC: 2752 2759 2789 2791 Offset letterpress printing; computerized typesetting; glue & stitch binding

(G-2071)
DAWN BIBLE STUDENTS
199 Railroad Ave (07073-1915)
Phone ..... 201 438-[illegible]
Natl Toll Free: 800 234-3296
FAX: 201 531-8225
President: Robert Gorecki
Vice Pres: Burton Brown
▼EMP: 20 **EST:** 1932
EST. SLS: $1MM-4.9MM
Privately Owned
SIC: 2731 2732 Bible study book printing & publishing

BCSA0274599

(G-2072)
DIAMOND CHEMICAL CO INC
Union Ave & Dubois St
PO Box 7428 (07073-7428)
Phone 201 935-4300
Natl Toll Free: 800 654-7627
FAX: 201 935-6997
President: Abraham Diamond
Vice Pres: Fred Diamond
V P Opers: Robert Diamond
V P Sales: Harold Diamond
Controller: Bill Lovatt
Plant Mgr: Asghar Alee
EMP: 100 **EST:** 1930
EST. SLS: $25MM-49.9MM
Privately Owned
SIC: 2842 Cleaning chemicals

(G-2073)
E C I TECHNOLOGY CO
1 Madison St (07073-1605)
Phone 973 773-8686
FAX: 973 773-8797
President: Holmes Bailey
Opers Mgr: Marianna Rabinovitch
EMP: 20 **EST:** 1987
EST. SLS: $1MM-4.9MM
Privately Owned
SIC: 3825 3829 3559 Test eqpt, solder ability testers, plating bath analyzers & plating barrels

(G-2074)
EAST RUTHERFORD SCREEN PRINT
154 Park Ave (07073-1818)
Phone 201 939-4006
FAX: 201 939-2023
Owner: Dawn Tausendfreund
Owner: Paul Tausendfreund
EMP: 7 **EST:** 1989 **SQ. FT:** 1,200
EST. SLS: $500-999K
Privately Owned
SIC: 2396 2395 Textile screen printing & embroidering svc

(G-2075)
ERFED CORP
1 Madison St (07073-1605)
Phone 201 438-1568
President: Erwin Fedkenhever
EMP: 3 **EST:** 1956 **SQ. FT:** 3,000
EST. SLS: Under $500K
Privately Owned
SIC: 3499 Metal concession vending boxes

(G-2076)
EXPRESS SIGN
405 Murray Hill Pkwy (07073-2136)
Phone 201 438-0098
Owner: David Marinaro
EMP: 2 **EST:** 1991
EST. SLS: Under $500K
Privately Owned
SIC: 3993 Metal & plastic signs

(G-2077)
F G M INC
Div Star-Glo Industries Inc
2 Carlton Ave (07073-1612)
Phone 973 478-4470
President: John Feitner
Plant Mgr: Ted Senkowski
EMP: 5 **EST:** 1960
EST. SLS: $500-999K
Privately Owned
SIC: 3089 Plastic injection molding
HQ: Star-Glo Industries Inc
2 Carlton Ave
East Rutherford, NJ 07073
201 939-6162

(G-2078)
F P METAL PRODUCTS
175 Hackensack St (07073-1504)
Phone 201 933-2173
FAX: 201 933-1455
Owner: Frank Pinella
EMP: 7 **EST:** 1965
EST. SLS: $500-999K
Privately Owned
SIC: 3444 7692 Sheet metal fabricating & HVAC eqpt, piping & welding

(G-2079)
FALICON, JAMES SERVICES
375 Railroad Ave (07073-1717)
PO Box 381 (07073-0381)
Phone 201 438-5628
FAX: 201 438-7020
Owner: James Falicon
General Mgr: Kenneth Falicon
EMP: 3 **EST:** 1921 **SQ. FT:** 2,100
EST. SLS: Under $500K
Privately Owned
SIC: 2752 2759 Offset & letterpress printing

(G-2080)
G & J MACHINE CO INC
366 Grove St (07073-1727)
Phone 201 896-0770
FAX: 201 896-1036
President: Jose Gutierrez
EMP: 5 **EST:** 1980
EST. SLS: $500-999K
Privately Owned
SIC: 3559 Precision machine parts

(G-2081)
GENERAL FOAM CORP
13 Manor Rd (07073-2119)
Phone 201 933-8540
FAX: 201 933-1418
President: Daniel Brecher
Dir Persnl: Dorothy Clark
Persnl Mgr: Mary Ross
Plant Mgr: Ed Reinink
EMP: 270 **EST:** 1962
EST. SLS: $25MM-49.9MM
Privately Owned
SIC: 3086 2821 Flexible polyurethane foam prdts
HQ: General Foam Corp
100 W Century Rd
Paramus, NJ 07652
201 262-7501

(G-2082)
INSULFAB PLASTICS INC
150 Union Ave (07073-1999)
Phone 201 939-7392
FAX: 201 507-8748
President: Frank J Hanus I I I
EMP: 3 **EST:** 1938
EST. SLS: Under $500K
Privately Owned
SIC: 3089 3599 Plastic machine parts

(G-2083)
J B WOODWORKING SHOP
21 State Rt 17 (07073-2106)
Phone 201 933-0428
Owner: John Borer
EMP: 4 **EST:** 1960 **SQ. FT:** 1,000
EST. SLS: Under $500K
Privately Owned
SIC: 2434 Wood kitchen cabinets

(G-2084)
KEMP INC
21 Poplar St (07073-1289)
Phone 201 935-9484
FAX: 201 935-2897
Owner: Henry Feitz
EMP: 10 **EST:** 1940 **SQ. FT:** 8,000
EST. SLS: $500-999K
Privately Owned
SIC: 3599 Machinery parts

(G-2085)
KULITE TUNGSTEN CORP
160 E Union Ave (07073-2124)
Phone 201 438-9000
FAX: 201 438-0891
CEO: Ronald Kurtz
Human Res Mgr: Dave Menapace
Q C Mgr: Kathy Morrison
Plant Mgr: Bob Behrends
◆EMP: 102 **EST:** 1948
EST. SLS: $10MM-24.9MM
Privately Owned
SIC: 3356 3341 Nonferrous metals

(G-2086)
LOGATTO BOOKBINDING
390 Paterson Ave (07073-1339)
Phone 201 438-4344
FAX: 201 438-1775
President: Medo LoGatto
EMP: 7 **EST:** 1967
EST. SLS: Under $500K
Privately Owned
SIC: 2789 Perfect, plastic & glue custom binding

(G-2087)
MARATHON ENTERPRISES INC (HQ)
66 E Union Ave (07073-2179)
Phone 201 935-3330
FAX: 201 935-5693
President: Gregory Papalexis
Vice Pres: Boyd Edelman
V P Sales: Mark Rosen
Treasurer: Nick Iasiello
EMP: 20 **EST:** 1965
Privately Owned
SIC: 2013 Hot dogs, frankfurters, cooked & cured lunch meats

(G-2088)
MARIJON DYEING & FINISHING CO
219 Murray Hill Pkwy (07073-2114)
PO Box 408 (07073-0408)
Phone 201 933-9770
FAX: 201 933-2172
President: Frank Mummolo
CFO: John Grimaldi
Plant Mgr: Bill Bernish
EMP: 200 **EST:** 1955
EST. SLS: $25MM-49.9MM
Privately Owned
SIC: 2262 Synthetic textile finishing

(G-2089)
MATHESON GAS PRODUCTS INC
932 Paterson Plank Rd (07073-2173)
PO Box 85 (07073-0085)
Phone 201 933-2400
FAX: 201 933-1928
Purch Agent: Sandy Saba
Plant Mgr: Mike Jenkins
EMP: 100 **EST:** 1925
EST. SLS: $25MM-49.9MM
Privately Owned
SIC: 2813 Specialty indl compressed gases
HQ: Matheson Gas Products Inc
959 Route 46
Parsippany, NJ 07054
973 257-1100

MC GONEGAL MANUFACTURING CO, EAST RUTHERFORD NJ See Themac Inc

(G-2090)
MEEHAN-TOOKER INC (HQ)
25 E Union Ave (07073-2127)
Phone 201 933-9600
Natl Toll Free: 800 526-7841
FAX: 201 933-7291
CEO: Michael Voss
CFO: Thomas Morley
EMP: 35 **EST:** 1928
Privately Owned
SIC: 2752 2789 Offset printing; glue, side wire & saddle stitch binding

(G-2091)
NUMERTECH INC
167 Humboldt St (07073-1736)
Phone 201 507-1822
FAX: 201 507-1866
Owner: Ajay Patel
EMP: 6 **EST:** 1988
EST. SLS: $1MM-4.9MM
Privately Owned
SIC: 3559 Aircraft & computer inds machinery parts

(G-2092)
O K BEADS INC (HQ)
405 Railroad Ave (07073-1747)
PO Box 441 (07073-0441)
Phone 201 438-5431
FAX: 201 438-8647
President: Joe Cremona
V P Sales: Joan Sonn
EMP: 5 **EST:** 1987
Privately Owned
SIC: 3231 Glass beads

(G-2093)
PARK GENERATOR CO INC
456 Paterson Ave (07073-1392)
Phone 201 438-4455
FAX: 201 438-2711
President: Ibrahim Turk Altein
EMP: 6 **EST:** 1960
EST. SLS: $500-999K
SIC: 3621 Starters, alternators, motors & generators

(G-2094)
PENQUIN PUTNAM CO
390 Murray Hill Pkwy (07073-2109)
Phone 201 933-9292
Natl Toll Free: 800 631-8571
FAX: 201 933-4927
V P Mktg: Robert Copp
EMP: 150 **EST:** 1961
EST. SLS: $25MM-49.9MM
Privately Owned
SIC: 2731 Book publishing
HQ: Penquin Putnam Co
200 Madison Ave
New York, NY 10016
212 951-8400

PUTNAM'S BERKLEY PUBL GROUP, EAST RUTHERFORD NJ See Penquin Putnam Co

RAMS BEE TYPESETTING, EAST RUTHERFORD NJ See Thermal Typesetting

(G-2095)
RAPID-REPRO CO
275 Paterson Ave (07073-1337)
Phone 201 933-2515
Owner: Edward Hager
EMP: 1 **EST:** 1970
EST. SLS: Under $500K
Privately Owned
SIC: 2752 Commercial lithograph printing

(G-2096)
ROEHRS CO INC
PO Box 125 (07073-0125)
Phone 201 939-0090
FAX: 201 939-0091
Publisher: Alfred B Graf
EMP: 4
EST. SLS: $500-999K
Privately Owned
SIC: 2731 Horticultural books

(G-2097)
ROYCE ASSOCIATES LTD
Div Monopco Inc
35 Carlton Ave (07073-1613)
Phone 201 438-5200
FAX: 201 438-5207
CEO: A J Royce I I I
EMP: 8 **EST:** 1982
EST. SLS: $1MM-4.9MM
SIC: 2865 3087 Zinc dust dyes & plastics

(G-2098)
SCANCELLI PRINTS INC
190-212 Van Winkle St
PO Box 416 (07073-0416)
Phone 201 933-0720
FAX: 201 933-8686
President: Kamig Ozanian
Vice Pres: Kerop Ozanian
Vice Pres: Edward Ozanian
EMP: 70 **EST:** 1952
EST. SLS: $10MM-24.9MM
Privately Owned
SIC: 2679 Hand printed wallpaper

(G-2099)
SCITEX AMERICA CORP
1 Meadowlands Plz # 8th (07073-2100)
Phone 201 507-9000
FAX: 201 507-8448
Sales Mgr: Jeff O'Reilly
EMP: 50
EST. SLS: $1MM-4.9MM
SIC: 2791 Computer typesetting & desktop publishing
HQ: Scitex America Corp
8 Oak Park Dr
Bedford, MA 01730
781 275-5150

GEO

BCSA0274600

GEO

(G-2100)
SEQUA CAN MACHINERY
Div Sequa Corp
401 Central Ave (07073-1217)
Phone 201 933-1200
FAX: 201 933-9029
President: Jack Skrypek
V P Sls/Mktg: Robert Carpenter
Plant Mgr: George D'Amelio
EMP: 175 **EST:** 1940
EST. SLS: $10MM-24.9MM
Publicly Owned
SIC: 3549 3479 Can decorating eqpt
PA: Sequa Corp
200 Park Ave 54th FL
New York, NY 10166
212 986-5500

(G-2101)
STAHL SOAP CORP (HQ)
1 Branca Rd (07073-2121)
Phone 201 507-5770
Natl Toll Free: 800 527-5115
FAX: 201 507-8868
V P/Gen Mgr: June Stahl
EMP: 8 **EST:** 1945
Privately Owned
SIC: 2841 Soap

(G-2102)
STAR-GLO INDUSTRIES INC (HQ)
2 Carlton Ave (07073-1612)
Phone 201 939-6162
FAX: 201 939-4054
President: Anthony G Olivieri
V P Finance: Richard Wilz
V P Engrg: Ed Peterhoff
V P Sales: Dennis Azzolina
Purch Agent: David Oddo
Dir Human Res: Beatriz Sanchez
Q C Mgr: Jonathon Richards
EMP: 187 **EST:** 1950
SQ. FT: 175,000
Privately Owned
SIC: 3061 Custom molded rubber prdts

(G-2103)
TECH-AIR CONSTRUCTORS INC
169 Hackensack St (07073-1504)
Phone 201 438-4440
FAX: 201 438-8954
Owner: Dennis Palmer
EMP: 8
EST. SLS: $500-999K
Privately Owned
SIC: 3444 Sheet metal fabrication

(G-2104)
THEMAC INC (HQ)
405 Railroad Ave (07073-1747)
PO Box 444 (07073-0444)
Phone 201 438-2313
FAX: 201 438-8647
President: Joseph Cremona
Sales Mgr: Laura Wilkins
▼**EMP:** 10 **EST:** 1976
Privately Owned
SIC: 3599 Tool post grinders

(G-2105)
THERMAL TYPESETTING
299 Hackensack St (07073-2005)
Phone 201 460-0408
FAX: 201 460-8204
President: James Ramsey
EMP: 8 **EST:** 1983
EST. SLS: $500-999K
Privately Owned
SIC: 2752 2759 2791 2789 Offset printing, thermography, typesetting & desktop publishing; glue, perfect, ring & saddle stitch binding

(G-2106)
TITAN PLASTICS CO
Sub Penn Bottle & Supply Co
433 Murray Hill Pkwy (07073-2107)
Phone 201 935-7700
FAX: 201 935-1584
General Mgr: Jay Selz
Plant Mgr: Mark Selz
EMP: 60
EST. SLS: $5MM-9.9MM
Privately Owned
SIC: 3085 Pharmaceutical plastic bottles
PA: Penn Bottle & Supply Co Inc
7150 Lindbergh Blvd
Philadelphia, PA 19153
215 365-5700

(G-2107)
TRANS-WORLD MARKETING CORP
360 Murray Hill Pkwy (07073-2109)
Phone 201 935-5565
FAX: 201 935-3996
President: James Cavaluzzi
V P Finance: William V Carafello
General Mgr: Mark Stanton
EMP: 65 **EST:** 1966
EST. SLS: $5MM-9.9MM
Privately Owned
SIC: 3993 2542 Signs, advertising displays & in-store fixtures

(G-2108)
U S INK CORP (DH)
343 Murray Hill Pkwy (07073-2110)
Phone 201 933-7100
FAX: 201 933-6113
Vice Pres: R W Schmidt
Plant Mgr: Ed Caddell
▼**EMP:** 200 **EST:** 1936
Privately Owned
SIC: 2893 Printing ink
HQ: U S Ink Corp
651 Garden St
Carlstadt, NJ 07072
201 935-8666

(G-2109)
WEBVELOPE ROLLS OFFSET
200 Murray Hill Pkwy (07073-2113)
Phone 201 896-3800
FAX: 201 896-3924
President: John Pizzuto
EMP: 7 **EST:** 1944
EST. SLS: $500-999K
Privately Owned
SIC: 2752 2791 Offset & lithographic printing & typesetting

(G-2110)
Z & A PRINTING CO INC
349 Railroad Ave (07073-1717)
Phone 201 438-0888
FAX: 201 438-6263
Owner: Carl Oliveri
Prdtn Mgr: Leo Lombardi
EMP: 6 **EST:** 1985 **SQ. FT:** 4,000
EST. SLS: $500-999K
Privately Owned
SIC: 2752 2791 2789 Offset printing, typesetting & saddle stitch binding

(G-2111)
ZENITH PRECISION INC
536 Paterson Ave (07073-1282)
Phone 201 933-8640
FAX: 201 933-0936
President: Matteo De Gennaro
Vice Pres: Giovanni Antico
Purch Agent: Lucy Ann Antico
▼**EMP:** 10 **EST:** 1967
SQ. FT: 4,000
EST. SLS: $1MM-4.9MM
Privately Owned
SIC: 3559 3769 Precision machine parts for aerospace & commercial inds

EAST WINDSOR
Mercer County

N L ASSOCIATES INC, EAST WINDSOR NJ Moved To Monmouth Junction NJ

EATONTOWN
Population - 13,800
Monmouth County

(G-2112)
ADAMATIC CORP
Div P M I Food Equipment Group
607 Industrial Way W (07724-2213)
Phone 732 544-8400
Natl Toll Free: 800 526-2807
FAX: 732 544-1216
Business Mgr: Mike Hartnett
▼**EMP:** 40 **EST:** 1951
EST. SLS: $5MM-9.9MM
Publicly Owned
SIC: 3556 Bakery machinery & eqpt
HQ: P M I Food Equipment Group
701 S Ridge Ave
Troy, OH 45374
937 332-3000

(G-2113)
ALGEN DESIGN SERVICES INC
38 Industrial Way E (07724-3317)
Phone 732 389-4511
FAX: 732 389-3811
EMP: 50
EST. SLS: $5MM-9.9MM
Privately Owned
SIC: 3672 Printed circuit boards

(G-2114)
ALLIEDSIGNAL INC
Aerospace Equipment System Div
118 Highway 35 (07724-3444)
Phone 732 542-2000
FAX: 732 389-7301
General Mgr: Dennis Strouse
Marketing Mgr: Bob Haligan
Dir Human Res: Robert McKeagen
Q C Mgr: Norm Harris
◆**EMP:** 250 **EST:** 1930
SQ. FT: 500,000
EST. SLS: $25MM-49.9MM
Publicly Owned
SIC: 3728 3812 3621 Aircraft generators & controls
PA: AlliedSignal Inc
101 Columbia Rd
Morristown, NJ 07960
973 455-2000

(G-2115)
ART PRESS INC
968 Shrewsbury Ave (07724-3003)
Phone 732 544-0505
FAX: 732 544-9114
General Mgr: Art Sliverstone
EMP: 5 **EST:** 1991 **SQ. FT:** 2,500
EST. SLS: $500-999K
Privately Owned
SIC: 2752 Commercial offset printing

(G-2116)
BERWEILER & SONS INC
36 Eaton Rd (07724-2286)
Phone 732 542-4522
FAX: 732 389-8450
President: Robert Berweiler
EMP: 8
EST. SLS: $1MM-4.9MM
Privately Owned
SIC: 3441 Steel fabricating

(G-2117)
BILLS, JAMES W INC
126 High St (07724-3424)
Phone 732 544-1338
Owner: James W Bills
EMP: 4
EST. SLS: Under $500K
Privately Owned
SIC: 3444 Sheet metal fabricating

(G-2118)
BIO-LOGICAL CONTROLS INC
1 Industrial Way W (07724-2255)
Phone 732 389-8922
FAX: 732 389-8922
President: Gary D Messina
EMP: 4 **EST:** 1970
EST. SLS: $500-999K
Privately Owned
SIC: 3569 Air filtration units for health care ind

(G-2119)
COLWOOD ELECTRONICS INC
15 Meridian Rd (07724-2242)
Phone 732 544-1119
FAX: 732 544-1118
President: Richard Colaguori
EMP: 9 **EST:** 1979 **SQ. FT:** 3,800
EST. SLS: $1MM-4.9MM
Privately Owned
SIC: 3546 Woodburning tools

(G-2120)
CRITERION CHOCOLATES IN
125 Lewis St (07724-3454)
Phone 732 542-7
FAX: 732 542-0045
Owner: George Karagias
General Mgr: Ron Boyadjian
EMP: 15 **EST:** 1929
EST. SLS: $5MM-9.9MM
Privately Owned
SIC: 2066 Chocolates

(G-2121)
CURVON CORP
34 Apple St (07724-2600)
Phone 732 747-3
Natl Toll Free: 800 631-2236
FAX: 732 747-5491
President: Blake G Banta
EMP: 25 **EST:** 1891
EST. SLS: $1MM-4.9MM
Privately Owned
SIC: 2392 2231 2241 Horse blanke

(G-2122)
D & D TOOL CO INC
132 Lewis St (07724-3480)
Phone 732 542-11
FAX: 732 542-1241
President: John M Dietz I I I
▼**EMP:** 18 **EST:** 1951
EST. SLS: $1MM-4.9MM
Privately Owned
SIC: 3494 3592 3452 Valves, pistons & pins

(G-2123)
DESIGN NEON
PO Box 688 (07724-0688)
Phone 732 935-14
Owner: Susan Gubitosa
EMP: 4 **EST:** 1990
EST. SLS: Under $500K
Privately Owned
SIC: 3993 Neon signs

(G-2124)
E C C S INC
1 Sheila Dr # 6A (07724-2663)
Phone 732 747-699
FAX: 732 747-6542
CEO: Greg Azcui
V P Sls/Mktg: David Boyle
Opers Mgr: Priyan Guneratne
Dir Mfg: Tim Berbrich
◆**EMP:** 95 **EST:** 1983
SQ. FT: 40,000
EST. SLS: $10MM-24.9MM
Privately Owned
SIC: 3577 Computer storage systs

(G-2125)
ELECTRONIC CONCEPTS INC (HQ)
526 Industrial Way W (07724-2284)
PO Box 1278 (07724-1081)
Phone 732 542-7880
FAX: 732 542-0524
President: Bernard Lavene
V P Mktg: Philip Lepore
Purch Agent: Mark Fitzpatrick
Opers Mgr: Robert Landis
◆**EMP:** 112 **EST:** 1969
Privately Owned
SIC: 3675 Capacitors

(G-2126)
F & M ORTHOPEDIC
22 Main St (07724-3432)
Phone 732 542-1949
FAX: 732 542-1448
Owner: Kevin Barna
Treasurer: John Flynn
EMP: 4 **EST:** 1987 **SQ. FT:** 2,000
EST. SLS: $500-999K
Privately Owned
SIC: 3842 Orthopedic, prosthetic & surgical devices

(G-2127)
FASHION RITE CORP INC
8 Industrial Way E (07724-3317)
Phone 908 578-0709
FAX: 908 578-0750
President: Tony Adrisano
▲**EMP:** 35 **EST:** 1974
EST. SLS: $1MM-4.9MM
Privately Owned

▲=Import ▼=Expo
◆=Import/Expo

BCSA0274601

ATTACHMENT 10

Sic Code
Quickly Find SIC Info & Resources in Our Online Directory Today.
www.business.com

Sic Code
Get Industry intelligence on over 700 sectors. Updated quarterly.
www.FirstResearch.com

SiC Wafers
Silicon Carbide all diameters For Research and Development
www.UniversityWafer.com

Ads by Google

Table of Contents
Search
How to get help
Search Government sites
Government Hotlines
Today's Federal Register
FAQs
Services
Contact Info for:
EPA
State agencies
OSHA
DOT
Regs:
Search Government regs and sites
Data: Search EPA databases
States
Related Sites
Feedback
What's new
Site home

Ads by Google
Primary Sic Code
Engine Codes
Roamans Codes
Dialing Codes
Code Uneetee com

SIC Code List

The U.S. Standard Industrial Classification (SIC) system was the older way of classifying businesses to provide new comparability in statistics about business activity across North America. Starting in 2000, the North American Industry Classification System (NAICS) will begin to replace the U.S. SIC system (it is being phased in). NAICS is used in the U.S., Canada, and Mexico and is expected to help reshape the way we view our changing economy (i.e., NAFTA, etc.)

The SIC codes are presented below in their entirety. They are still in use and appear often on some government forms.

If you would like to see the new NAICS codes click here!

Or to easily convert a single SIC to NAICS, OR a single NAICS code to SIC, click here

To locate either an SIC code or an industry, just click on the "Find in Page" function in your browser (in Netscape, just click on "edit" then "find in page") and enter the code or industry you're looking for.

For more information about a specific SIC code, click here

DIVISION A. AGRICULTURE, FORESTRY, AND FISHING

01 AGRICULTURAL PRODUCTION-CROPS

011 CASH GRAINS
0111 WHEAT
0112 RICE
0115 CORN
0116 SOYBEANS
0119 CASH GRAINS, NOT ELSEWHERE CLASSIFIED

013 FIELD CROPS, EXCEPT CASH GRAINS
0131 COTTON
0132 TOBACCO
0133 SUGARCANE AND SUGAR BEETS
0134 IRISH POTATOES
0139 FIELD CROPS, EXCEPT CASH GRAINS, NOT ELSEWHERE CLASSIFIED

016 VEGETABLES AND MELONS
0161 VEGETABLES AND MELONS

017 FRUITS AND TREE NUTS
0171 BERRY CROPS

BCSA0314751
7/2/2009

305 GASKETS, PACKING, AND SEALING DEVICES AND RUBBER AND PLASTICS HOSE
3052 RUBBER AND PLASTICS HOSE AND BELTING
3053 GASKETS, PACKING, AND SEALING DEVICES

306 FABRICATED RUBBER PRODUCTS, NOT ELSEWHERE CLASSIFIED
3061 MOLDED, EXTRUDED, AND LATHE-CUT MECHANICAL RUBBER GOODS
3069 FABRICATED RUBBER PRODUCTS, NOT ELSEWHERE CLASSIFIED

308 MISCELLANEOUS PLASTICS PRODUCTS
3081 UNSUPPORTED PLASTICS FILM AND SHEET
3082 UNSUPPORTED PLASTICS PROFILE SHAPES
3083 LAMINATED PLASTICS PLATE, SHEET, AND PROFILE SHAPES
3084 PLASTICS PIPE
3085 PLASTICS BOTTLES
3086 PLASTICS FOAM PRODUCTS
3087 CUSTOM COMPOUNDING OF PURCHASED PLASTICS RESINS
3088 PLASTICS PLUMBING FIXTURES
3089 PLASTICS PRODUCTS, NOT ELSEWHERE CLASSIFIED

31 LEATHER AND LEATHER PRODUCTS

311 LEATHER TANNING AND FINISHING
3111 LEATHER TANNING AND FINISHING

313 BOOT AND SHOE CUT STOCK AND FINDINGS
3131 BOOT AND SHOE CUT STOCK AND FINDINGS

314 FOOTWEAR, EXCEPT RUBBER
3142 HOUSE SLIPPERS
3143 MEN'S FOOTWEAR, EXCEPT ATHLETIC
3144 WOMEN'S FOOTWEAR, EXCEPT ATHLETIC
3149 FOOTWEAR, EXCEPT RUBBER, NOT ELSEWHERE CLASSIFIED

315 LEATHER GLOVES AND MITTENS
3151 LEATHER GLOVES AND MITTENS

316 LUGGAGE
3161 LUGGAGE

317 HANDBAGS AND OTHER PERSONAL LEATHER GOODS
3171 WOMEN'S HANDBAGS AND PURSES
3172 PERSONAL LEATHER GOODS, EXCEPT WOMEN'S HANDBAGS AND PURSES

319 LEATHER GOODS, NOT ELSEWHERE CLASSIFIED
3199 LEATHER GOODS, NOT ELSEWHERE CLASSIFIED

32 STONE, CLAY, GLASS, AND CONCRETE PRODUCTS

321 FLAT GLASS
3211 FLAT GLASS

322 GLASS AND GLASSWARE, PRESSED OR BLOWN
3221 GLASS CONTAINERS
3229 PRESSED AND BLOWN GLASS AND GLASSWARE, NOT ELSEWHERE CLASSIFIED

323 GLASS PRODUCTS, MADE OF PURCHASED GLASS
3231 GLASS PRODUCTS, MADE OF PURCHASED GLASS

324 CEMENT, HYDRAULIC
3241 CEMENT, HYDRAULIC

325 STRUCTURAL CLAY PRODUCTS
3251 BRICK AND STRUCTURAL CLAY TILE
3253 CERAMIC WALL AND FLOOR TILE
3255 CLAY REFRACTORIES
3259 STRUCTURAL CLAY PRODUCTS, NOT ELSEWHERE CLASSIFIED

BCSA0314761
11/2/2009

34 FABRICATED METAL PRODUCTS, EXCEPT MACHINERY AND TRANSPORTATION EQUIPMENT

341 METAL CANS AND SHIPPING CONTAINERS
3411 METAL CANS
3412 METAL SHIPPING BARRELS, DRUMS, KEGS, AND PAILS

342 CUTLERY, HANDTOOLS, AND GENERAL HARDWARE
3421 CUTLERY
3423 HAND AND EDGE TOOLS, EXCEPT MACHINE TOOLS AND HANDSAWS
3425 SAW BLADES AND HANDSAWS
3429 HARDWARE, NOT ELSEWHERE CLASSIFIED

343 HEATING EQUIPMENT, EXCEPT ELECTRIC AND WARM AIR; AND PLUMBING FIXT
3431 ENAMELED IRON AND METAL SANITARY WARE
3432 PLUMBING FIXTURE FITTINGS AND TRIM
3433 HEATING EQUIPMENT, EXCEPT ELECTRIC AND WARM AIR FURNACES

344 FABRICATED STRUCTURAL METAL PRODUCTS
3441 FABRICATED STRUCTURAL METAL
3442 METAL DOORS, SASH, FRAMES, MOLDING, AND TRIM
3443 FABRICATED PLATE WORK (BOILER SHOPS)
3444 SHEET METALWORK
3446 ARCHITECTURAL AND ORNAMENTAL METALWORK
3448 PREFABRICATED METAL BUILDINGS AND COMPONENTS
3449 MISCELLANEOUS STRUCTURAL METALWORK

345 SCREW MACHINE PRODUCTS, AND BOLTS, NUTS, SCREWS, RIVETS, AND WASHE
3451 SCREW MACHINE PRODUCTS
3452 BOLTS, NUTS, SCREWS, RIVETS, AND WASHERS

346 METAL FORGINGS AND STAMPINGS
3462 IRON AND STEEL FORGINGS
3463 NONFERROUS FORGINGS
3465 AUTOMOTIVE STAMPINGS
3466 CROWNS AND CLOSURES
3469 METAL STAMPINGS, NOT ELSEWHERE CLASSIFIED

347 COATING, ENGRAVING, AND ALLIED SERVICES
3471 ELECTROPLATING, PLATING, POLISHING, ANODIZING, AND COLORING
3479 COATING, ENGRAVING, AND ALLIED SERVICES, NOT ELSEWHERE CLASSIFIED

348 ORDNANCE AND ACCESSORIES, EXCEPT VEHICLES AND GUIDED MISSILES
3482 SMALL ARMS AMMUNITION
3483 AMMUNITION, EXCEPT FOR SMALL ARMS
3484 SMALL ARMS
3489 ORDNANCE AND ACCESSORIES, NOT ELSEWHERE CLASSIFIED

349 MISCELLANEOUS FABRICATED METAL PRODUCTS
3491 INDUSTRIAL VALVES
3492 FLUID POWER VALVES AND HOSE FITTINGS
3493 STEEL SPRINGS, EXCEPT WIRE
3494 VALVES AND PIPE FITTINGS, NOT ELSEWHERE CLASSIFIED
3495 WIRE SPRINGS
3496 MISCELLANEOUS FABRICATED WIRE PRODUCTS
3497 METAL FOIL AND LEAF
3498 FABRICATED PIPE AND PIPE FITTINGS
3499 FABRICATED METAL PRODUCTS, NOT ELSEWHERE CLASSIFIED

35 INDUSTRIAL AND COMMERCIAL MACHINERY AND COMPUTER EQUIPMENT

351 ENGINES AND TURBINES
3511 STEAM, GAS, AND HYDRAULIC TURBINES, AND TURBINE GENERATOR SET UNI
3519 INTERNAL COMBUSTION ENGINES, NOT ELSEWHERE CLASSIFIED

352 FARM AND GARDEN MACHINERY AND EQUIPMENT
3523 FARM MACHINERY AND EQUIPMENT

ATTACHMENT 11

1991

MacRAE'S STATE INDUSTRIAL DIRECTORY

44 cc

BCSA0274589

East Rutherford

KOVAL PRESS INC.
75 Armour Place
Dumont, NJ 07628
Phone: 201-385-6640
Sales: $10,000,000 and over
Emp: 5
Commercial Printing, Lithographic
SIC 2752

NICKS KITCHEN CENTER
71 New Milford Ave.
Dumont, NJ 07628-2325
Phone: 201-384-7419
Sales: $1,000,000 to $5,000,000
Emp: 2
Kitchen Cabinets
SIC 2434
Partner: J. D' Aloisio
Partner: N. D' Aloisio

OCEAN MACHINERY CORP.
29 Aladdin Ave., Box 36
Dumont, NJ 07628-3334
Phone: 201-384-0545
Sales: Up to $1,000,000 Est. 1950
Emp: 29
3,724 Sq. Ft.
◆Commercial marine equipment, pumps, winches & machining
SIC 3561, 3593, 3594, 3599, 3731
Pres: Howard L. Humphries
Treas: Elinor M. Hein
Sls Mgr: Vincent F. Smith
PA: Vincent F. Smith
Ch Eng: William Murphy

PAMCO PROSTHETICS
30 W. Madison Ave.
Dumont, NJ 07628-2317
Phone: 201-385-8744
Emp: 1
Dental Appliances
SIC 3843
Pres: J. Romano

EAST RUTHERFORD
Telephone Area Code-201

ABBOTT SCREEN PROCESS PRINTING INC.
299 Hackensack St.
E. Rutherford, NJ 07073-2005
Phone: 201-933-5455
Sales: Up to $1,000,000 Est. 1962
Emp: 5
6,000 Sq. Ft.
Mfr. decals & posters; screen printing
Pres: Sam Zell
Exec VP: Ara Postoyan
Bank:
National Community Bank
Rutherford, NJ

AFFINITO & SONS MFG. CO., FELICE
503 Washington Ave.
E. Rutherford, NJ 07072-2802
Phone: 201-933-2012
Sales: $1,000,000 to $5,000,000
Emp: 13
7,500 Sq. Ft.
Precision machining
SIC 3593, 3599
Partner: Anthony Affinito
Partner: Domenick Affinito
Partner: Felice Affinito

BERLIN & JONES COMPANY
2 E. Union Ave.
E. Rutherford, NJ 07070
Phone: 201-933-5900
FAX: 201-933-4242
Sales: $10,000,000 and over
Est. 1843
Emp: 250
110,000 Sq. Ft. 6.3 Acres
▲Envelopes
★SIC 2677
Pres: Duncan Whyte
Exec VP: Richard L. Higginson
Treas: Walter Lypowy
VP Sales: Richard B. Lipman
Sr VP: Vincent J. Vitiello
Bank:
United Jersey Bank
E. Rutherford, NJ

BOSTITCH, DIV. OF TEXTRON
1 Madison St.
E. Rutherford, NJ 07073
Phone: 201-773-5113
212-964-0840
Emp: 15
7500 Sq. Ft.
Mfr. staplers, nailers, fastening equipment
Pres: G. Schuler
GM: S. Pollack
OM: D. Midiri
PLANT:
RI: E. Greenwich, 401-884-2500

CHEMED CORP., DUBOIS CHEMICALS DIV.
DuBois St. & Union Ave.
E. Rutherford, NJ 07073
Phone: 201-933-2300
Sales: $10,000,000 and over
Est. 1928
Emp: 89
133,000 Sq. Ft. 7 Acres
▲Industrial & institutional cleaning compound
★SIC 2842
CEO: Paul Voet
VP Fin: T. Westerfield
Treas: W. Harrington
GM: A. Pennisi
OM: F. Bellino
PA: H. Hiller
Traf Mgr: J. Delcore
Plant Mgr: Julian Stacy
Ch Eng: P. Floyd
MM: W. Walsh
Bank:
United Jersey
Branch Plants:
Dallas, Tex.
Los Angeles, Calif.
Sharonville, Ohio

COLONIAL PRINTING INK CO.
180 E. Union Ave.
E. Rutherford, NJ 07073-2124
Phone: 201-933-6100
Est. 1959
Emp: 100
30,000 Sq. Ft. 3 Acres
◆Printing ink
SIC 2893
Pres: George Lambert
Exec VP: P. Herman
VP: Nat Velardi
Traf Mgr: F. Abhate
PF: J. Halter
Banks:
United Jersey Bank
E. Rutherford, NJ
Bankers Trust
E. Rutherford, NJ
NY: E. Rutherford

D & M SHEET METAL CO., INC.
430 Central Ave.
E. Rutherford, NJ 07073-1214
Phone: 201-939-6300
Sales: $5,000,000 to $10,000,000
Est. 1969
Emp: 47
20,000 Sq. Ft. 1 Acres
Sheet metal fabrication
SIC 3444, 3449
Pres: Andrew Mihal
VP: M. Mihal
Sec: Irene Mihal

DAWN BIBLE STUDENTS ASSOCIATION
199 Railroad Ave.
E. Rutherford, NJ 07073-1915
Phone: 201-438-6421
Sales: $10,000,000 and over
Emp: 23
Religious book publishing
SIC 2731
Pres: G.M. Jevck
VP: W. Post

F.P. METAL PRODUCTS, INC.
175 Hackensack St.
E. Rutherford, NJ 07073
Phone: 201-933-2173
SIC 3443
Pres: Frank Panella
Treas: Betty Panella

INSULFAB PLASTICS INC.
150 Union Ave.
E. Rutherford, NJ 07073-1917
Phone: 201-939-7392
Outside NJ: 800-631-8394
Sales: $10,000,000 and over
Est. 1923
Emp: 70
30,000 Sq. Ft. 1 Acres
▲Mfr. & dist. fabricators of plastic sheets, tubes, rods, etc.
SIC 3081, 3082, 3083, 3084, 3085, 3086, 3087, 3088, 3089, 3432
Pres: J.G. Nemeth
VP: F.J. Hanous
Bank:
National Community Bank
E. Rutherford, NJ
SALES OUTLETS:
MA: Watertown, 923-9800
NJ: East Rutherford, 939-7392
NC: Greensboro, 274-1688
SC: Spartanburg, 582-7507

KULITE TUNGSTEN CORP.
160 E. Union Ave.
E. Rutherford, NJ 07073
Phone: 201-438-9000
Telex: 138533
Sales: $5,000,000 to $10,000,000
Est. 1947
Emp: 60
38,000 Sq. Ft.
◆Tungsten, powder metallurgy, refactory metals & special alloys
★SIC 3297, 3356, 3399
Pres: Ronald Kurtz
VP: Anthony Kurtz
Sec: Stephen Kurtz
Compt: Charles Lindenauer
GM: Richard Manberg
Sls Mgr: Douglas Disney
Ch Eng: Henry Utzinger

LO GATTO BOOKBINDING CO.
390 Paterson Ave.
E. Rutherford, NJ 07073-1339
Phone: 201-438-4344
Sales: Up to $1,000,000 Est. 1967
Emp: 4
4,000 Sq. Ft.
Bookbinding
SIC 2789
Pres: M. Lo Gatto
VP: R. Lo Gatto
Bank:
National Community Bank
E. Rutherford, NJ

MARATHON ENTERPRISES
66 E. Union Ave.
E. Rutherford, NJ 07073
Phone: 201-935-3331
Sales: $10,000,000 and over
Emp: 225
Mfr. sausage & other meat products, bread & cake
SIC 2013, 2051
Pres: Gregory Papalexis

ORVAL-KENT FOOD CO.
164 Madison St.
E. Rutherford, NJ 07073-1635
Phone: 201-779-2090
Sales: $10,000,000 and over
Emp: 265
125,000 Sq. Ft.
▲Fresh prepared salads, mayonnaise & dressing
★SIC 2035, 2066, 2068, 2096, 2099
VP Fin: Fin/Harvey L. Cohen
Sls Mgr: Edward O'Brien

PARK GENERATOR CO., INC.
456 Paterson Ave.
E. Rutherford, NJ 07073-1315
Phone: 201-438-4455
Emp: 18
Automotive Starters & Generators
SIC 3621
Pres: J. Casiello

PLASTIC MOLD TOOL & DIE CO., INC.
1 Maple St.
E. Rutherford, NJ 07073
Phone: 201-939-7757
FAX: 201-939-5991
Sales: $1,000,000 to $5,000,000
Est. 1945
Emp: 48
13,000 Sq. Ft. 66 Acres
◆Mfr. molds for plastics; medical instrumentation
SIC 3544
Pres: J. A. Ogando

ROEHRS CO.
Box 125, 24 High St.
E. Rutherford, NJ 07073-1404
Phone: 201-939-0091
Sales: Up to $1,000,000 Est. 1959
Emp: 8
▲Horticultural book publishing
SIC 2731
Pres: A. B. Graf
VP: W. Hoffbauer
Sec: A. Kipp

SGANCELLI PRINTS INC.
190-212 Van Winkle St., Box 416
E. Rutherford, NJ 07073-1817
Phone: 201-933-0720
Sales: $1,000,000 to $5,000,000
Est. 1888
Emp: 55
Wallpaper
SIC 2679
Pres: Karnig Ozanian

STAR-GLO INDUSTRIES INC.
4 Carlton Ave.
E. Rutherford, NJ 07073
Phone: 201-939-6162
Telex: 138054; Fax: 201-939-4054
Sales: $10,000,000 and over
Est. 1954
Emp: 225
180,000 Sq. Ft. 6 Acres
▲Mfr. custom molded rubber goods, short run precision custom plastic molding, molded rubber, urethane & teflon covered rollers
★SIC 3061, 3069, 3081, 3082, 3083, 3084, 3085, 3086, 3087, 3088, 3089, 3432
Ch Bd: Joseph R. Starita
Exec VP: W. Lamonica
Pres: Anthony G. Olivieri
VP Opn: E. Peterhoff
VP Mfg: M. F. Sheridan
Sls Mgr: D. Azzolino
OM: W. Van Benschoter
PA: Dave Oddo
Res Dir: N. Vanderploog
Bank:
First Fidelity
Newark, NJ

TEC TORCH CO., INC. DIV. STAR-GLO INDUSTRIES INC.
2 Carlton Ave., Box 500
E. Rutherford, NJ 07073
Phone: 201-933-1121
Telex: 138054
Sales: $1,000,000 to $5,000,000
Est. 1956
Emp: 20
7,000 Sq. Ft. 1.9 Acres
◆Torches for inert gas welding & inert gas spot welding
★SIC 3548, 3549, 3559
VP Mkt: R. Longo
Treas: R. Longo
Sls Mgr: T. Calandrillo

ZENITH PRECISION INC.
536 Paterson Ave., Box 241
E. Rutherford, NJ 07073-1207
Phone: 201-933-8640
Sales: Up to $1,000,000
Emp: 23
4,000 Sq. Ft.
Precision machined parts
SIC 3545
Pres: W.W. Struck
Sec: J. Malachuk

EDGEWATER
Telephone Area Code-201

EYELET INC.
340 River Rd.
Edgewater, NJ 07020-1007
Phone: 201-943-1111
Sales: $1,000,000 to $5,000,000
Emp: 60
25,000 Sq. Ft.
Schiffli machine embroidery
SIC 2397
Pres: B. Mann
VP: D. Mann
VP: D. Rubin
Sec: L. Rubin

BCSA0274590

ATTACHMENT 12

MEMORANDUM

To: [redacted] (e-mail)

From: [redacted]

Subject: Berry's Creek Investigation
[redacted] - Insulfab

Date: July 20, 2008

On Monday, July 20, 2009, I made contact with [redacted] at his residence, [redacted]. I explained the purpose of my visit on behalf of the Berry's Creek PRP Group as it concerned his former employment with Insulfab in East Rutherford, NJ. [redacted] provided the following information:

[redacted], who is 77 years of age, confirmed that he worked at Insulfab in East Rutherford but on a sporadic basis between 1958 and 1991. [redacted] could not recall exact employment dates during this period noting that he left Insulfab on at least three occasions for other employment including one five-year period when he operated his own service station.

[redacted] said he began his employment around 1958 as a lathe machine operator and continued to work as a machine operator until he eventually became a machinist foreman during the latter part of his Insulfab employment. In describing Insulfab's East Rutherford operation, [redacted] mostly corroborated previous accounts provided by former employees [redacted] and [redacted].

I questioned [redacted] about Insulfab's waste streams, particularly during the earlier period of his employment. [redacted] said water-soluble machine oil was the primary waste generated from machining operations. He recalled waste coolant was placed in 55-gallon drums that, to the best of his knowledge, were removed by Insulfab's waste hauling vendor. He could not identify any particular waste hauler that might have serviced Insulfab, and he did not know where Insulfab's waste was disposed.

[redacted] said other wastes included plastic scraps and plastic powder waste that was collected in the plant's vacuum system. He recalled that the company had both floor and ceiling vacuums and that accumulated plastic powder was disposed with plant trash. He also recalled that dirty rags, used primarily for general cleaning, were collected in a drum and subsequently disposed with the trash. He recalled that one of the janitors usually removed the waste drums to an outdoor area where the waste hauler picked them up. [redacted] said he was not familiar with the use of cleaning solvents at Insulfab and believed that any use of solvents would have been minimal.

Regarding Insulfab's reported discharges to the Joint Meeting Sewer System, [redacted] said he was not familiar with Insulfab's wastewater discharges. He was certain that machine coolant was not discharged to the sewer system, reiterating that waste coolant was always placed in drums for disposal. [redacted] was likewise not familiar with the operation of the air conditioning system or any coolant substance that might have been used in conjunction with the system. [redacted] remembered the sir conditioning system was installed around 1964 and how oppressive conditions were at the plant prior to that time.

When asked about other employees, [redacted] identified [redacted] (phonetic) as a former pant maintenance man who might be helpful if he is still living. He thought [redacted] resided in Lyndhurst when he worked at Insulfab and then relocated to Florida following his retirement. He identified [redacted] as former inspections employee who is believed to be residing in Rutherford. [redacted], when asked, said former employee [redacted] is definitely deceased.

[redacted] was unable to provide any additional information and the interview was concluded.

cc: [redacted] (e-mail)

[redacted]

MEMORANDUM

To: [redacted] (e-mail)

From: [redacted]

Subject: Berry's Creek Investigation
[redacted] - Insulfab

Date: July 21, 2009

On Tuesday, July 21, 2009, I made telephone contact with [redacted] at his residence, [redacted], telephone [redacted]. After I explained the purpose of my call on behalf of the Berry's Creek PRP Group regarding his former employment with Insulfab in East Rutherford, NJ, [redacted] provided the following information:

[redacted], who is 85 years of age, confirmed his employment with Insulfab beginning sometime in the early-1950s until his retirement in 1985. Although he was not certain about his employment starting date, [redacted] believed the company was known as Insulating Fabricators when he began his employment. [redacted] worked primarily as a lathe machine operator during his earlier period of employment before being assigned to machine maintenance and repair. He noted that the company began transitioning to computer-operated machines during his later employment years.

[redacted] described Insulating Fabricators/Insulfab as a large machine shop that filled customer orders for plastic parts. He said the company purchased all of its plastic supplies and did not manufacture any of its own. When asked, [redacted] said he was not familiar with any secret government contract that Insulating Fabricators might have worked on in the early-1950s. (As cited in borough health minutes).

I questioned [redacted] about machine maintenance and in particular the use of lubricants and cleaning solvents. [redacted] acknowledged his use of machine oil for lubrication, but he was unable to describe the lubricant other than to identify it as "regular machine oil." He thought waste oil was collected and dumped into drums; however, he did not know the arrangements for waste oil disposal.

[redacted] also confirmed that solvents were occasionally used for cleaning parts and equipment. He identified carbon tetrachloride as one such solvent that was used during the earlier period before it was determined to be dangerous and its use was discontinued. He could not identify any solvent(s) that Insulfab might have used following the banning of carbon tetrachloride. [redacted] was not sure if rags were used with solvent in cleaning machinery, but acknowledged some soiled rags might have been disposed with plant trash.

[redacted]

[redacted] said most plant waste consisted of plastic powder that was generated from the numerous machines that Insulfab operated. He said large quantities of plastic powder were collected in drums and disposed as plant trash. He had no idea who the company's contracted waste hauler(s) might have been.

Regarding Insulfab's reported wastewater discharges to the Joint Meeting Sewer System, [redacted] said he knew of no liquid waste that the company discharged to the sewer system other than water for the water-cooled air conditioning system, which was installed in the 1960s. [redacted] said the system, as he understood it, operated strictly on cold water and did not require adding any coolant substances.

[redacted] was unable to provide any additional information and the interview was concluded.

cc: [redacted] (e-mail)

[redacted]

MEMORANDUM

To: [redacted] (e-mail)

From: [redacted]

Subject: Berry's Creek Investigation
[redacted] - Insulfab

Date: July 15, 2008

On Tuesday, July 14, 2009, I made telephone contact with [redacted] at his residence, [redacted], telephone [redacted]. After I explained the purpose of my call on behalf of the Berry's Creek PRP Group regarding his former employment with Insulfab, [redacted] provided the following information:

[redacted] confirmed his employment at Insulfab from 1956 until his termination in 1995. During his initial period of employment, [redacted] said the company was known as Insulating Fabricators, and occupied a small building at 150 Union Avenue in East Rutherford, NJ. [redacted] said he worked in various capacities at Insulfab including production control, sales and assistant plant manager. He relocated with the company to Tilton, NH around 1991 and remained with Insulfab until his lay-off in 1995.

[redacted] described Insulfab's East Rutherford business as essentially a machine shop operation where plastic was machined and formed into a variety of plastic parts ranging from very small to very large items. [redacted] said the company had an extensive customer base including the defense electronics industry.

[redacted] noted that Insulfab's machining operation required minimal use of raw materials, because the company did not produce any of the plastic it machined. When asked about his knowledge of themoset and thermolaminating processes, [redacted] explained that these were two different types of plastic that Insulfab machined, and not processes that the company actually utilized on-site. He described thermoset plastic as a very rigid plastic that can not be bent, citing Bakelite as an example. By contrast, he described thermolaminated plastic as pliable and can be molded, citing Plexiglas as an example. He reiterated that Insulfab machined these plastics but did not produce thermoset or thermolaminated plastic.

Regarding the use of solvents, oils, inks and other types of potentially hazardous substances, [redacted] said the use of these substances was minimal because the East Rutherford operation was relatively small and was confined to machining. He remembered the plant storage area was small and accommodated several 55-gallon coolant drums along with a small number of paint cans for in-house painting and ink cans for some product stamping.

[redacted]

[redacted] believed Insulfab used water-based coolants and that waste coolant was stored in drums that were periodically removed by an unknown vendor. He confirmed that employees occasionally used cleaning solvents including carbon tetrachloride to clean machinery. [redacted] acknowledged that dirty cleaning rags, plastic waste, sweepings along with some small ink and solvent cans were likely disposed in the plant trash dumpster. He said an unknown waste hauler made regular, possibly daily pick ups, of the plant dumpster. He had no idea where the hauler disposed of Insulfab's waste.

Regarding the company's reported wastewater disposal to the Joint Meeting sewer system, [redacted] said he was not familiar with the company's use of the Joint Meeting. He believed a significant volume of wastewater was generated from the company's air conditioning system. He remembered the company dug a very deep hole, perhaps 300 feet, to an on-site underground spring that it used for the air conditioning system. [redacted] was not aware of any on-site septic system that Insulfab might have utilized during his employment in East Rutherford. He was likewise not familiar with any major accidents or spills at the plant.

I asked [redacted] about other former employees including an individual tentatively identified as chemical engineer [redacted]. [redacted] said this former employee, [redacted], is deceased. He expressed surprise that I identified him as a chemical engineer. [redacted] said he always knew [redacted] a production control/sales employee and doubted that he ever earned an engineering degree. [redacted] was not familiar with any chemical engineering position that existed at the East Rutherford plant during his term of employment.

[redacted] believed [redacted], a former accounting employee, and [redacted], former vice president, are still residing in the North Jersey area. He said former plant manager [redacted] was last known to be residing in Ft. Myers, FL while [redacted] and [redacted] are deceased. [redacted] said the only other person who could be helpful regarding plant waste disposal would [redacted] (phonetic), former plant maintenance supervisor; however, [redacted] noted [redacted] could be deceased because of his advanced age.

[redacted] was unable to provide any additional information and the interview was concluded.

cc: [redacted] (e-mail)

BCSA0315988

MEMORANDUM

To: [redacted] (e-mail)

From: [redacted]

Subject: Berry's Creek Investigation
[redacted] - Insulfab

Date: July 16, 2008

On Wednesday, July 15, 2009, I made telephone contact with [redacted] at his son's residence in [redacted]. I had called [redacted]'s [redacted] residence and received voice message referral to the [redacted] number. After I explained the purpose of my call on behalf of the Berry's Creek PRP Group regarding his former employment with Insulfab in East Rutherford, NJ, [redacted] provided the following information:

[redacted] confirmed his employment at Insulfab in East Rutherford from [redacted] until his retirement in [redacted]. [redacted] said he worked in the company's quality control and production control departments before becoming plant manager sometime in the 1980s. [redacted] described the East Rutherford plant as very similar to that of a "job shop" where customers placed orders for plastic parts which were then machined according to blueprint specifications.

[redacted] stated that Insulfab did not manufacture or produce plastic but received its supplies from various chemical companies including Dupont and Rohm & Haas. Insulfab received sheet, rod and tube plastic supplies that consisted of both thermoset and laminate plastics such as nylon base, lexan, Teflon and Plexiglas.

When asked, [redacted] said Insulfab's basic plant processes remained intact during his 37- year employment. He noted the most significant change that affected production was equipment modifications including the transition from manual machining to computer- and numerically-controlled machining.

I questioned [redacted] about his knowledge of wastewater discharges to the Joint Meeting Sewer System citing 1977 figures that indicated Insulfab to be one of the large volume industrial dischargers to the Joint Meeting. [redacted] said he knew of no wastewater discharge other than that generated by the company's air conditioning system. He corroborated former employee [redacted]'s description of Insulfab's use of on-site well water for its cooling system.

When questioned further, [redacted] said he could not recall any other liquid waste streams that Insulfab might have discharged to the Joint Meeting. He said the company

always used water-based coolants but he believed waste coolant was placed in drums and not discharged to the sewer system. [redacted] noted that as plant manager he oversaw the filing of MSDS sheets which the company filed for its machine coolants and solvents.

[redacted] also corroborated [redacted]'s account regarding the minimal use of cleaning solvents including carbon tetra chloride. He confirmed that floor sweepings, dirty rags and possibly some empty solvent cans might have been disposed in the company's waste dumpster. He thought a local waste hauler serviced the dumpster and disposed of waste at one of the local landfills.

[redacted] could not identify any particular waste hauler who serviced Insulfab's dumpster but he assumed it was the same hauler who had the contract with the Borough of East Rutherford. [redacted] explained that as plant manager he tried to solicit bids for a less costly waste removal contract, but he subsequently learned that the more favorable waste hauling bidders were "not available in East Rutherford." [redacted] did not elaborate but implied that there might have been some unsavory elements that influenced local waste removal contracts.

Regarding other former employees, [redacted] identified [redacted] of [redacted] and [redacted] of [redacted] as plant foreman who might be able to provide additional information. He confirmed that [redacted] (phonetic) was a former long-time maintenance man; however, [redacted] did not know if [redacted] is still living because his estimated age would be at least 85 years. When asked, [redacted] said he was not aware of Insulfab employing anyone in a chemical engineering position at East Rutherford.

[redacted] was unable to provide any additional information and the interview was concluded.

cc: [redacted] (e-mail)

ATTACHMENT 13

Removal of Chromate from Cooling Tower Blowdown by Reaction with Electrochemically Generated Ferrous Hydroxide

E. I. Onstott[1] **and William S. Gregory**

University of California, Los Alamos Scientific Laboratory, Los Alamos, N.M. 87544

Edward F. Thode

New Mexico State University, Las Cruces, N.M. 88001

■ Treatment of cooling tower blowdown with electrochemically generated $Fe(OH)_2$ quantitatively reduced Cr(VI) to Cr(III) and concurrently precipitated it without pH adjustment. Concentrations of Cr(VI) of <0.005 mg/l. were achieved. $Fe(OH)_2$ treatment also precipitated a large fraction of the phosphate and other anions to improve product effluent quality significantly with respect to total dissolved solids. Steady-state generation of $Fe(OH)_2$ in blowdown was accomplished with high Faraday efficiency in a flow cell which utilized sacrificial low-carbon steel anodes and stainless steel cathodes. Colloids were formed under most electrolysis conditions, and special procedures were required to obtain filterable precipitates.

Chromate salts are used commercially for corrosion control in cooling water systems. Wastes from chrome plating baths contain both chromate salts and chromic acid. Removal of chromium from these waste effluents prior to return to natural waterways is a major environmental problem. Hexavalent chromium is especially undesirable since it is known to be carcinogenic (Amer. Pub. Health Assoc., 1965) and also deleterious to sewage plant operation (Siegerman, 1971).

Levels of chromium allowed in waste effluents which are returned to natural waterways and underground reservoirs by Federal law are presently controlled by state environmental improvement and protection agencies. The U.S. Public Health Service has specified a maximum Cr(VI) concentration of 0.05 mg/l. for drinking water.

Treatment for Cr(VI) removal usually involves chemical reduction to Cr(III) with SO_2, sulfite salts, $FeSO_4$ (Carls and Schieber, 1971), or $Na_2S_2O_5$ (Balden, 1959) all at pH 2.5 to 3. Cr(III) is then precipitated at pH 8.5 by adding NaOH or CaO. These procedures increase total dissolved solids (Na_2SO_4 or $CaSO_4$) in the treatment process by an estimated 200 mg/l. for a Cr(VI) content of 15 mg/l.

Several other methods of treatment which have been reported include reduction by scrap iron (*Air, Water News*, 1971), iron chips (Selm and Hulse, 1962), iron powder (Hine, 1969), metal sulfides (Lancy, 1966), electrochemical reduction with carbon particles (*Products Finishing*, 1970), and ion exchange (Carls and Schieber, 1971).

A new method of treating cooling tower blowdown utilizing electrochemically generated $Fe(OH)_2$ as the reducing agent is reported here. Cr(VI) is reduced quantitatively to Cr(III) by $Fe(OH)_2$ and concurrently precipitated without adjusting the pH of the blowdown before or after electrolysis. The reaction can be written:

$$0.5Cr_2O_7^{2-} + 3Fe(OH)_2 + 3.5H_2O \rightleftharpoons Cr(OH)_3 + 3Fe(OH)_3 + OH^- \quad (1)$$

The free energy change, $\Delta G°$, for this reaction in neutral solution was computed from Latimer's data (1952) to be −38.3 kcal/mol of Cr, and it is almost as large as for the reaction in acid solution:

$$HCrO_4^- + 7H^+ + 3Fe^{2+} \rightleftharpoons Cr^{3+} + 3Fe^{3+} + 4H_2O \quad (2)$$

where $\Delta G°$ is −40.1 kcal/mole of Cr.

In this paper are reported the results of laboratory batch and flow cell experiments which were done to test improvement of water quality with respect to Cr(VI), Cr(III), soluble orthophosphate, soluble condensed phosphates, and total dissolved solids.

Experimental

The source of waste water was cooling tower blowdown effluent from the Los Alamos Scientific Laboratory power plant. The cooling water is routinely made up from secondary sewage effluent from the Laboratory Technical Area treatment plant, and a proprietary corrosion inhibitor (Betz Laboratories, Trevose, Pa.) containing chromate, phosphate, and zinc is added. Typically, the quality of the secondary sewage effluent is very good: chemical oxygen demand, 25 mg/l.; total dissolved solids, 210 mg/l.; total soluble phosphate (soluble orthophosphate plus soluble condensed phosphates which hydrolyze to orthophosphate), 2 mg/l. P. The cooling water is recirculated as many as four times and total dissolved solids in the blowdown increases by a factor of three or four.

Cr(VI), total Cr, soluble orthophosphate, and soluble condensed phosphate analyses were done, usually in triplicate, according to Standard Methods (Amer. Pub. Health Assoc., 1965). The permanganate method was used for total Cr, and the stannous chloride modification was used for phosphates.

Total dissolved solids were analyzed at 103°C by a procedure developed in this laboratory to obviate the need for desiccation of samples. Analyses were done in an air conditioned laboratory at 22.5 ± 1°C and about 50% relative humidity. Clean 250-ml beakers were dried for several hours at 103°C, cooled in air for 20 min, then tared to the nearest 0.1 mg. A top-loading Mettler balance was used to weigh 200 ± 0.05 grams of liquid sample which had been passed through a 0.45-μ membrane (Millipore) filter. After evaporation of samples to dryness on a steam plate, they were heated for at least 24 hr at 103°C, then weighed to the nearest 0.1 mg after cooling in air for 20 min. By this procedure, moisture absorption by samples after heating at 103°C was minimal, and not significantly different than if samples were desiccated prior to weighing. Triplicate samples were reproducible to a precision generally better than 3%. Beakers were conveniently cleaned for reuse with 1*M* oxalic acid and a brush to remove adherent solids.

Batch electrolyses were done with 1.8 l. of waste water in a 2-l. beaker. The cathode was a 316 stainless steel sheet 9.4 × 17 × 0.08 cm, positioned parallel to a mild cold-rolled steel (AISI C1010) anode of similar dimensions and separated at top and bottom with nonconducting spacers

[1] To whom correspondence should be addressed.

BCSA0315660

approximately 2 mm thick. Effective area of each electrode was 140 cm². The electrolyte was stirred with a 3.5-cm Teflon-covered magnetic bar at about 2000 rpm, such that a vortex funnel extended about two thirds of the way down from the surface, and the electrolyte was continuously swirled between the electrodes, which were located close to the wall of the beaker. Before each electrolysis, the anode was cleaned with 1*M* oxalic acid, washed with distilled water, and then air dried for about 15 min prior to weighing and immediate use. Experiments were done at constant current, manually controlled, usually at 1 A. The voltage required for 1 A was in the range of 3–6. At the start of each experiment, a reverse polarity electrolysis was done for 15–30 sec. After electrolysis, the anode was quickly wiped and washed clean of adhering material with distilled water, then air dried for a few minutes before weighing.

Most of the precipitate was removed by rough filtering with a compressed plug of fiber glass wool in a polyethylene funnel. Suspended solids and colloid not removed by this procedure were removed with a 0.45-μ membrane (Millipore) filter prior to analyses for chromium, phosphate, and total dissolved solids.

Steady-state flow experiments were done by pumping the blowdown from a barrel through a calibrated flowmeter to the electrolysis cell described below, using a small centrifugal pump. Flow rates were controlled with a 5-mm bore glass stopcock.

The cell was fabricated with two removable 12.7 × 52.3 × 0.64-cm type AISI C1019 cold formed steel anodes placed between three 12.7 × 52.3 × 0.08-cm Type 316 stainless steel cathodes in an upright position and spaced 0.16 cm. Acrylic plastic was used to frame the electrodes in a rectangular box. Feed to the cell was from the bottom; the product effluent overflowed the electrodes at the top of the cell. Total effective area of the anodes was 2080 cm², since both sides of each were utilized. Both sides of the middle cathode and one side of each outer cathode were utilized. Anodes were cleaned with 1*M* oxalic acid shortly before use, and were also operated cathodically for about 30 sec immediately prior to making a run.

Results and Discussion

Results from batch (beaker) experiments did not appear to be significantly different from results from steady-state flow cell experiments. Consequently, the results are reported in terms of appropriate parameters rather than by type of experiments.

Anodization of Fe. $Fe(OH)_2$ is generated electrochemically according to the electrode reactions:

$$Fe \rightarrow Fe^{2+} + 2e^- \text{ anode} \quad (3)$$

$$2H_2O + 2e^- \rightarrow H_2 + 2OH^- \text{ cathode} \quad (4)$$

$$Fe + 2H_2O \rightarrow Fe(OH)_2 + H_2 \quad (5)$$

Faraday efficiencies for this process in the blowdown effluents were evidently close to 100% as shown by weight loss measurements in Figure 1 for batch experiments. Good weight-loss data for the flow cell were not obtained because of the inability of weighing the anodes precisely after each individual run. However, the accumulated weight loss for several runs was very close to that expected for 100% Faraday efficiency.

Other investigators have reported on the efficiency of Fe anodization in waste waters. Miller and Knipe (1965) reported that steel anodes were anodized with 91% efficiency in sewage effluents, and Sadek (1970) measured about 100% efficiency for synthetic sewage. Recent work in this laboratory showed near 100% efficiency for low carbon steel anodes in secondary sewage effluents in beaker experiments, but in flow cell experiments only 84% efficiency was measured.

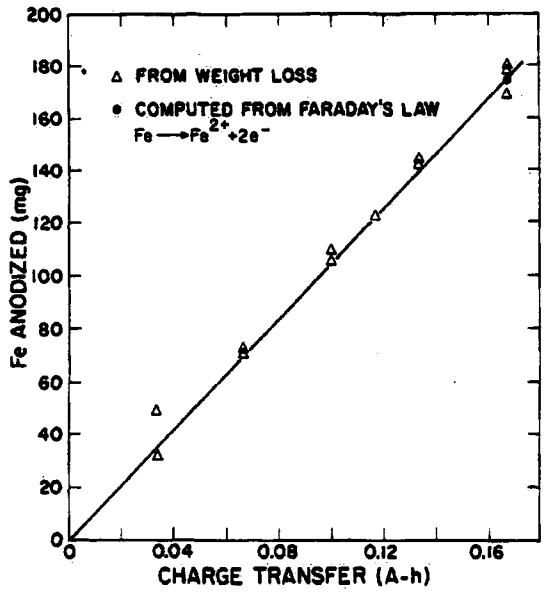

Figure 1. Faraday efficiency plot for $Fe(OH)_2$ generation in blowdown in batch experiments

Equation 3 is symbolic of the anode reaction, but probably it is not accurate for depicting the actual mechanism. Recent work by Bockris and co-workers (1971) on anodization of high purity Fe in neutral borate solutions showed that $Fe(OH)_2$ is formed as a layer on the anode. Similar behavior would be expected with blowdown, and under steady-state conditions the $Fe(OH)_2$ formed should be continuously ejected from the anode and react with Cr(VI) in solution.

Formation of Colloid. Colloids were formed in most of the electrolysis experiments. As a general rule, flocculated precipitates were obtained only when the amount of Fe anodized was <25 mg/l. or >200 mg/l. This behavior is in conformance with known coagulation phenomena (Stumm and O'Melia, 1968). For the former case, the precipitate was a mixture of Cr(III) and Fe(III) hydroxides and phosphates. For the latter case, the precipitate contained a large fraction of $Fe(OH)_2$ in addition to Cr(III) and Fe(III) hydroxides and phosphates.

As a practical matter, procedures were developed for obtaining filterable flocs while achieving quantitative Cr(VI) removal to concentrations of <0.005 mg/l. This could be done by three different procedures:

1. Electrolyze blowdown to give a concentration of Fe >200 mg/l.
2. Electrolyze blowdown to give a concentration of Fe >200 mg/l., then mix with unreacted blowdown to give the final product.
3. Electrolyze blowdown to give a concentration of Fe >200 mg/l.; electrolyze a second batch to give a concentration of Fe of 20–25 mg/l.; mix the two batches to give the final product.

Procedure 2 or 3 would ordinarily be preferred to minimize both iron consumption and electricity consumption, since 85 mg/l. of Fe would suffice. However, as will be seen later, for this stage of development, neither procedure 2 or 3 was effective for reducing total Cr to a very low level of <0.01 mg/l.

Removal of CR(VI) by $Fe(OH)_2$. Electrolytic reduction of Cr(VI) in blowdown on a stainless steel cathode could

BCSA0315661

possibly occur (Uhlig, 1962), but evidently the rate is very low, since exploratory electrolyses with a stainless steel anode (which was passive) and stainless steel cathode showed essentially no reduction of Cr(VI).

Removal of Cr(VI) by batch electrolysis with a Fe anode is demonstrated in Figure 2. Reduction to Cr(III) was very efficient until the concentration of Cr(VI) became small. The amount of Fe(II) required for quantitative removal of Cr(VI) was about 65 mg/l. as shown in Table I. (Note that total Cr removal is covered in a later section of this discussion.)

Partial reduction of Cr(VI) in the flow cell was also very efficient as shown by Table II.

However, when a mixing procedure was used to obtain a filterable floc, the amount of Fe(II) required for complete Cr(VI) reduction was greater than with a batch electrolysis. Table III shows this effect. About 85 mg/l. of Fe(II) was required.

These results indicate that flocculated $Fe(OH)_2$ is not as effective as freshly generated $Fe(OH)_2$ for removal of last traces of Cr(VI) to a concentration of <0.005 mg/l.

Some experiments also were done by a mixing procedure where untreated blowdown was mixed with electrolyzed blowdown containing flocculated $Fe(OH)_2$. The amount of Fe generated was >200 mg/l., and the amount of Fe added to the product after mixing was about 100 mg/l. Product effluents obtained under these conditions invariably contained <0.005 mg/l. of Cr(VI).

The competing reaction of oxidation of $Fe(OH)_2$ by dissolved oxygen probably accounts for the decreased efficiency of reduction of Cr(VI) to Cr(III) at low concentrations. With a dissolved O_2 concentration of 6.5 mg/l. in the blowdown, the amount of Fe(II) consumed by the reaction:

$$4Fe(OH)_2 + O_2 + 2H_2O \rightleftharpoons 4Fe(OH)_3 \quad (6)$$

would be 45 mg/l. Although this reaction has a $\Delta G°$ of −22.1 kcal/mol of Fe, it is slower and secondary to reaction 1 where $\Delta G°$ is −12.8 kcal/mol of Fe (Latimer, 1952).

Removal of Cr(III). Data were obtained on soluble Cr(III) remaining in electrolyzed blowdown and the resulting product effluents (Table IV). Determinations are reported only for products in which Cr(VI) was present in concentrations of <0.005 mg/l. and filterable flocs were obtained. Untreated blowdown pH values were in the

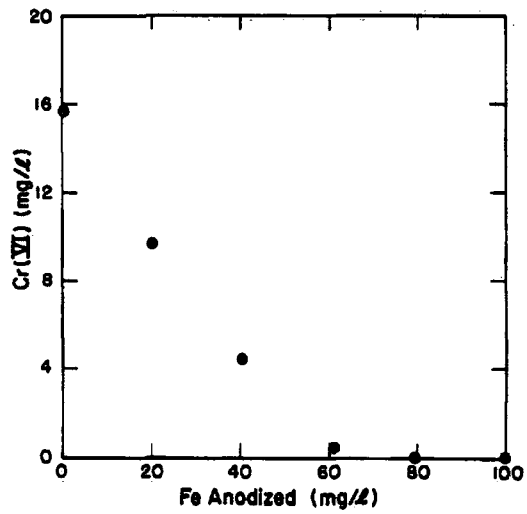

Figure 2. Removal of Cr(VI) by beaker electrolysis at 1 A. Fe was anodized at a rate of 17.4 mg/min

Table I. Removal of Cr(VI) by Batch Electrolysis at 1 Ampere

Elect. time, min.	Fe anodized, mg/l.	Starting Cr(VI), mg/l.	Product Cr(VI), mg/l.	Cr(VI) Removal, %	Efficiency of removal, %[a]
8.0	58	13.77	1.42	89.7	79
6.0	61	15.59	0.37	97.6	84
7.0	68	15.48	<0.005	>99.96	75
8.0	79	13.77	<0.005	>99.96	57
8.0	79	15.59	<0.005	>99.96	65
10.0	101	15.48	<0.005	>99.96	50

[a] Computed on the basis of 3 moles of Fe(II) per mole of Cr(VI).

Table II. Partial Reduction of Cr(VI) in Flow Cell at 2.5 Amperes

Flow rate, l./min	Fe anodized, mg/l.[a]	Starting Cr(VI), mg/l.	Cr(VI) removal, %	Efficiency of removal, %
1.50	22.2	13.28	45.7	99.9
1.50	22.2	14.28	45.7	96.4
1.50	22.2	13.10	50.6	98.1
1.50	22.2	13.45	54.3	100.0
1.95	28.9	14.13	59.1	93.7
1.95	28.9	12.96	62.7	92.4

[a] Computed from Faraday's law for 2-electron oxidation.

Table III. Removal of Cr(VI) by a Mixing Procedure[a]

Volume mixing ratio	Fe added, mg/l.	Starting Cr(VI), mg/l.	Product Cr(VI), mg/l.	Cr(VI) removal, %	Efficiency of removal, %
4.39	60	13.45	0.62	95.4	74
4.39	60	13.10	0.21	98.4	72
3.51	79	14.28	0.053	99.6	59
3.10	84	15.48	0.006	99.96	61
2.33	106	13.28	<0.005	>99.96	41

[a] One batch was electrolyzed 2.5 A and 1.95 l./min to give Fe content of 22 mg/l., then mixed with second batch which was electrolyzed at 24 A and 1.50 l./min to give Fe content of 278 mg/l.

BCSA0315662

Table IV. Concentrations of Cr(III) in Electrolyzed Blowdown and in Product Effluent after Mixing

Electrolyzed blowdown		Product effluent	
Fe anodized mg/l.	Cr(III), mg/l.	Fe added, mg/l.	Cr(III), mg/l.
278	0.005	103	0.035
278	<0.005	106	0.017
231	<0.005	110	0.038
278	<0.005	132	0.021
278	<0.005	139	0.123
303	0.013	152	0.107

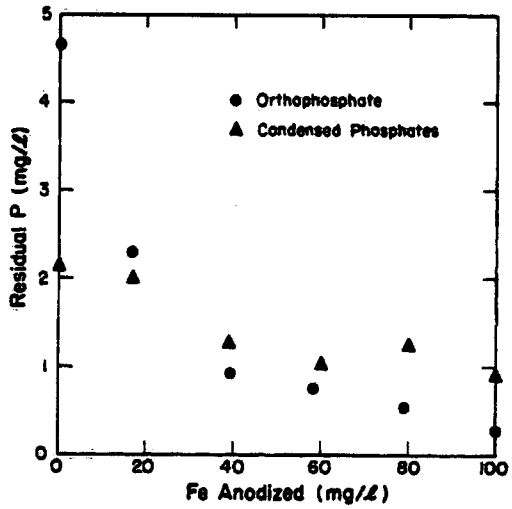

Figure 3. Removal of phosphates by beaker electrolysis at 1 A

range of 6.0–6.6 and product pH values were in the range of 6.8–7.8.

The concentrations of Cr(III) were low when large amounts of Fe were anodized in the blowdown, but the product effluents from mixing contained considerably more Cr(III). Adjustment of pH either before or after electrolysis possibly would improve Cr(III) removal.

Removal of Phosphates. Measurements were made on removal of soluble orthophosphate and soluble condensed phosphates. Figure 3 shows removal of phosphates from blowdown in a typical batch electrolysis. Figure 4 shows orthophosphate removal with respect to Fe anodized, and Figure 5 is a similar plot for condensed phosphate removal. Condensed phosphates were removed less efficiently than orthophosphate.

Residual orthophosphate concentrations after electrolysis (Figure 3) were similar to those measured by Recht and Ghassemi (1970) under comparable conditions by chemical precipitation with Fe(III) salts. For example, at pH 7.1 with a 2:1 Fe:P ratio, the residual orthophosphate concentration measured by Recht and Ghassemi (1970) was 1.8 mg/l. P, compared to the value of 2.3 mg/l. in Figure 3 for the same 2:1 Fe:P ratio. The residual orthophosphate concentration apparently is determined primarily by solubility limitations of Fe(III) orthophosphate.

Reduction in Total Dissolved Solids (TDS). Product effluents were definitely improved with respect to TDS. Data for flow cell runs are shown in Figure 6 with percentage reduction in TDS plotted as a function of Fe anodized. Substantial reductions averaging 22% were obtained for about 100 mg/l. of Fe, and larger reductions averaging 40% were measured for 280 mg/l. of Fe. A surplus of electrochemically generated precipitate is significantly beneficial for product effluent quality with respect to TDS.

Reagent and Energy Costs. Removal of Cr(VI) to a concentration of <0.01 mg/l. would require about 0.8 lb of

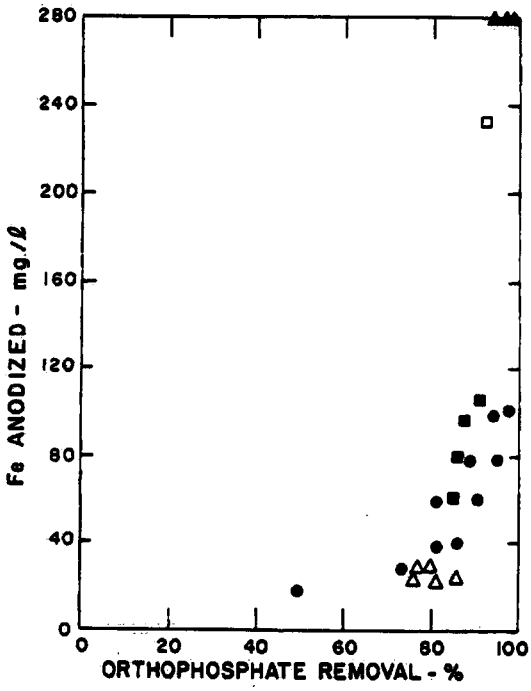

Figure 4. Removal of orthophosphate by electrolysis. Mean concentration in untreated blowdown was 5.67 mg/l. P

● 1-A beaker electrolysis product, △ 2.5-A flow cell electrolysis product, □ 20-A flow cell electrolysis product, ▲ 24-A flow cell electrolysis product, ■ 24-A flow cell electrolysis product mixed with 2.5-A flow cell electrolysis product

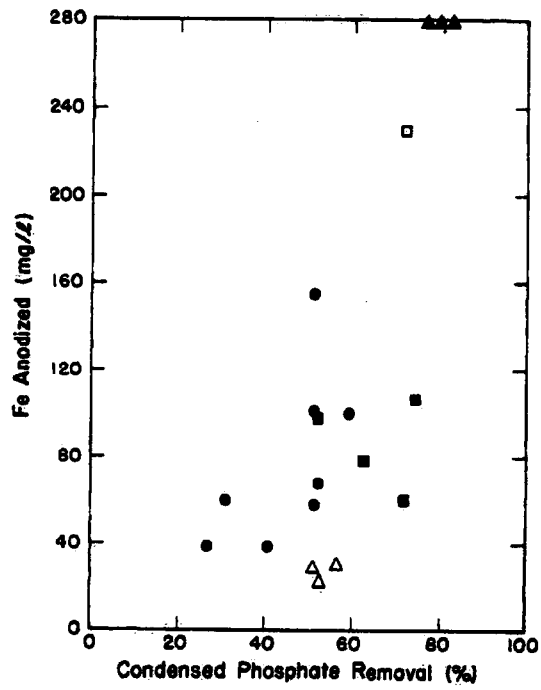

Figure 5. Removal of condensed phosphates by electrolysis. Mean value in untreated blowdown was 2.64 mg/l. P

● 1-A beaker electrolysis product, △ 2.5-A flow cell electrolysis product, □ 20-A flow cell electrolysis product, ▲ 24-A flow cell electrolysis product, ■ 24-A flow cell electrolysis product mixed with 2.5-A flow cell electrolysis product

BCSA0315663

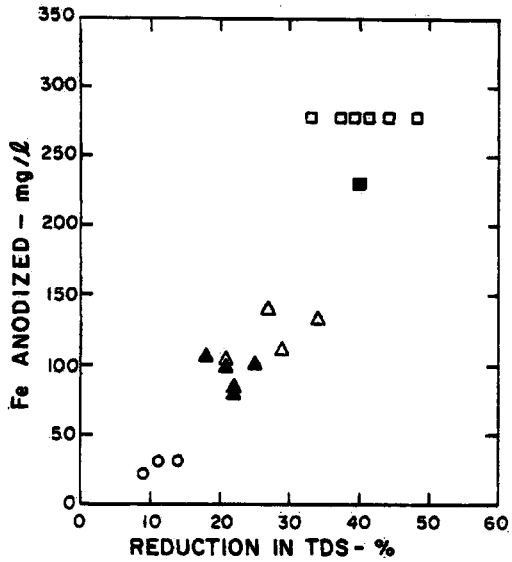

Figure 6. Reduction in total dissolved solids for blowdown feeds initially containing 720 to 990 mg/l. TDS

○ 2.5-A electrolysis product, □ 24-A electrolysis product, ■ 20-A electrolysis product, △ 24-A electrolysis product mixed with untreated blowdown, ▲ 24-A electrolysis product mixed with 2.5-A electrolysis product

low carbon steel per 1000 gal of product effluent. At a cost of 12 cents per lb, the Fe reagent cost would be about 10 cents per 1000 gal of product effluent, exclusive of shipping and handling costs.

Approximately 2 kwh (dc) per 1000 gal of product effluent would be required for a driving potential of 5 V.

Significance of Results

Recently many users of the proved chromate corrosion-prevention method have chosen to abandon it rather than go to the expense of special waste-treatment facilities. In the long run, this may not be an economically desirable course, because the substitute materials may prove more expensive than the continued use of Cr(VI) products coupled with effluent cleanup facilities. Furthermore, many users of Cr(VI) chemicals such as electroplaters have no alternative but to install effluent treatment facilities.

The electrochemical ferrous hydroxide precipitation process is worthy of further study and development because it offers a means of effectively removing total chromium while, at the same time, reducing phosphate by 80% or more and reducing TDS by up to 40%.

Primary advantages of the method are: Reduction and precipitation are done concurrently without adjustment of pH. Extraneous soluble ions are not added to increase TDS and also increase reagent cost. (There is a beneficial decrease in TDS by co-precipitation of Fe and Cr compounds in the flocs.) Reagent is added accurately and simply by controlling feed flows and current flows, and can be done in the steady-state mode for automated operation.

Disadvantages of the method are: Stable colloids are formed under most conditions which usually are optimum for quantitative Cr(VI) removal. Excessive amounts of anodized Fe are required for quantitative Cr(III) precipitation (<0.01 mg/l), and for maximum improvement in TDS. Direct current power is required.

Acknowledgment

The chromate removal problem was suggested by R. I. Brasier who also provided valuable counsel. R. J. Bard, Kermit L. Holman, and W. S. Nichols contributed valuable advice. Technical assistance was provided by New Mexico State University Cooperative students Douglas J. Roberts and Henry L. Horak.

Literature Cited

Air, Water News, Aug. 30, 1971, p 6.
American Public Health Association, "Standard Methods for the Examination of Water and Wastewater," 12th ed., 1965.
Balden, A. R., *Sewage Ind. Wastes*, 31, 934 (1959).
Bockris, J. O'M., Genshaw, M. A., Bursic, V., Wroblowa, H., *Electrochim. Acta*, 16, 1859 (1971).
Carls, B. H., Schieber, J. R., "Secondary Treatment Methods for Cooling Tower Blowdown," Betz Laboratories, Inc., Trevose, Pa., 1971.
Hine, Fumio, Jap. Patent 69,05,696 (March 10, 1969); *Chem. Abstr.*, 71, 128456*m* (1969).
Lancy, L. E., U.S. Patent 3,294,680 (Dec. 27, 1966).
Latimer, W. M., "Oxidation Potentials," second ed., Prentice-Hall, Englewood Cliffs, N.J., 1952.
Miller, H. C., Knipe, W., "Electrochemical Treatment of Municipal Waste Water," AWTR-13, U.S. Dept. HEW, Public Health Service (1965).
Prod. Finish. (Cincinnati), 34 (6), 92 (1970).
Recht, H. L., Ghassemi, Masood, "Kinetics and Mechanism of Precipitation and Nature of the Precipitate Obtained in Phosphate Removal from Wastewater Using Aluminum(III) and Iron(III) Salts," *Water Pollut. Contr. Res. Ser.*, 17010EKI 04/70, U. S. Dept. of the Int., FWQA, 1970.
Sadek, S. E., "An Electrochemical Method for Removal of Phosphates from Waste Waters," *Water Pollut. Contr. Res. Ser.*, 17010, U. S. Dept. of the Int., FWQA, 1970.
Selm, R. P., Hulse, B. T., U.S. Patent 3,027,321, March 27, 1962.
Siegerman, Howard, *ChemTech*, November 1971, p 672.
Stumm, Werner, O'Melia, C. R., *J. Amer. Water Works Ass.*, 60, 514 (1968).
Uhlig, H. H., "Corrosion and Corrosion Control," Wiley and Sons, New York, N.Y., 1962, p 226.

Received for review June 16, 1972. Accepted December 19, 1972. Work was done under the auspices of the United States Atomic Energy Commission.

BCSA0315664

ATTACHMENT 14

EPA-450/3-87-010a

Chromium Emissions from Comfort Cooling Towers — Background Information for Proposed Standards

Emissions Standards Division

U.S. ENVIRONMENTAL PROTECTION AGENCY
Office of Air And Radiation
Office Of Air Quality Planning And Standards
Research Triangle Park, North Carolina 27711

March 1988

BCSA0315665

1. SUMMARY

Regulations for chromium (Cr) emissions from comfort cooling towers (CCT's) are being developed because hexavalent chromium (Cr^{+6}), the form of Cr used in CCT's, is considered to be a potent carcinogen. Nationwide annual Cr emissions from CCT's are estimated to be about 7.2 to 206 Megagrams (16,000 to 453,000 pounds) (based on an average nationwide utilization rate of 46 percent). These emissions result in a health risk estimate of 4 to 112 cancer cases per year. This range reflects the lower- and upper-bound emission estimates and the upper-bound unit risk factor.

Two regulatory alternatives were evaluated for CCT's: nonchromium option and a high-efficiency drift eliminator option (HEDE). The least burdensome regulatory alternative is a standard that prohibits the use of chromium-based chemicals in CCT's and the sales of these chemicals for use in CCT's. Such a standard can reduce the risk by 100 percent, and this benefit can be achieved without operating problems or unreasonable costs.

A standard requiring retrofit of existing CCT's with HEDE's would be less effective (85 percent reduction in risk, or less). In addition, implementation of an HEDE standard would be impossible at some existing sites because of tower configuration. Where retrofit would be possible or in new CCT's, an HEDE standard would be much more complex than switching to nonchromium treatment. An annual inspection of the drift eliminator for proper sealing with the tower structure and an initial certification program to verify that selected drift eliminators can achieve the required emission rate would be required. This inspection and certification process would be more costly for operators than switching to nonchromium treatment programs. Furthermore, the certification process may take several years to complete.

BCSA0315677

Comfort cooling towers are used extensively as components of heating, ventilation, and air conditioning (HVAC) or refrigeration systems. The HVAC systems are installed in hospitals; hotels; shopping malls; and office, educational, and other commercial buildings. Refrigeration systems are used for ice skating rinks, cold storage (food) warehouses, and other commercial operations.

Hexavalent chromium is used in CCT water to inhibit corrosion in the heat exchanger of the HVAC or refrigeration equipment and in the connecting piping. Hexavalent chromium has long provided the best corrosion protection at a reasonable cost. However, environmental concerns (primarily wastewater discharges) have prompted many operators to switch to nonchromate water treatments. Currently, an estimated 75 to 90 percent of the 250,000 CCT's nationwide use nonchromium treatment programs or no water treatment. Although the remaining CCT's do not operate under special conditions that require the use of Cr^{+6}, many operators are reluctant to change from a treatment procedure with which they are familiar to one that will require more attention to achieve the same results.

A regulation eliminating Cr^{+6} emissions from CCT's is most effectively accomplished under Section 6 of the Toxic Substances Control Act (TSCA). Under TSCA, both owner/operator use of Cr^{+6} in CCT's and vendor sales of Cr^{+6} for use in CCT's could be prohibited. Under the Clean Air Act (CAA), the thrust of the rule would be on compliance by the owners and operators of the CCT's. The population of distributors (20+ major and approximately 400 total) is much smaller than the population of CCT's (approximately 250,000) that would have to be inspected to ensure implementation of the standard. Thus, TSCA is the best authority for regulating the use of Cr^{+6} chemicals in CCT's. By prohibiting the sales of the chemicals and also making the chemical sales companies liable, it is expected that the burden of ensuring compliance with the regulation would be reduced for both EPA and owners/operators of CCT's.

BCSA0315678

3. COMFORT COOLING TOWERS

3.1 GENERAL

This section provides a description of the source category and the major users of comfort cooling towers (CCT's); the cooling tower system; heating, ventilating, and air conditioning (HVAC) and refrigeration systems served by the cooling towers; cooling water chemical treatment programs; the mechanism by which hexavalent chromium (Cr^{+6}) is emitted, and the emission control techniques.

3.2 DEFINITION OF SOURCE CATEGORY

There are two broad categories of cooling towers, comfort and industrial. Comfort cooling towers are used to maintain a specified environment or refrigeration system. Industrial process cooling towers are used to control the temperatures of process fluids in industrial production units. The EPA is evaluating industrial towers separately because the cooling system conditions under which industrial towers operate may make controlling corrosion in an industrial tower more complex and difficult. The conditions that distinguish these towers and that make controlling Cr^{+6} emissions from CCT's less difficult than controlling Cr^{+6} emissions from industrial towers include a lower potential for corrosion because lower water temperatures typically are encountered; a lower utilization rate; the extensive use of heat exchangers constructed of copper, which is less susceptible to corrosive attack; little opportunity for upsets in the chemical treatment programs from contamination of the cooling water; and a lower potential for significant economic loss should alternative chemicals not perform satisfactorily. Usually only one heat exchanger is integrated into a single cooling tower system in CCT systems whereas a single industrial tower may support many heat exchangers.

BCSA0315681

Comfort cooling towers are used in all States in the U.S., primarily in urban areas. Major users of CCT's with HVAC systems include hospitals, hotels, educational facilities, office buildings, and shopping malls. Refrigeration systems that may operate with CCT's include ice skating rinks, cold storage (food) warehouses, and other commercial operations. Estimates from the two largest manufacturers of cooling towers (each represents a 40 percent market share) indicate that the nationwide population of CCT's is between 200,000 and 300,000.[1,2] An estimate slightly lower than 200,000 was provided by a smaller, regional manufacturer.[3] The 300,000 estimate was provided by the manufacturer that appears to have the higher percentage of the CCT market. Water treatment vendors estimated that 10 to 25 percent of CCT's use chromium-based water treatment chemicals.[4-6] For analysis purposes, it is assumed that the nationwide population of CCT's is 250,000 units and that 15 percent of CCT's (about 37,500) use chromium-based water treatment chemicals. Hexavalent chromium use in CCT's appears to be distributed randomly across the country.

3.3 COMFORT COOLING SYSTEM COMPONENTS

3.3.1 Cooling Tower

Cooling towers are devices that cool warm water by contacting it with ambient air that is drawn or forced through the tower. For most cooling towers, about 80 percent of the cooling occurs from evaporation of water as the air flowing through the tower contacts water cascading from the top to the bottom of the tower.[7] Most tower systems are designed with recirculating water systems to conserve water resources or reduce costs of purchasing water. Typically, the CCT is an open recirculating system, but some are closed recirculating systems. The major cooling tower components include the fan(s), fill material, water distribution deck or header, drift eliminator, structural frame, and cold water basin. Other components that affect tower operation include the pumps and pipes necessary to circulate the cooling water through the cooling tower and heat exchanger loops.

Cooling towers are designed with mechanically induced-, mechanically forced-, or natural-draft airflow. Induced draft is provided by a propeller-type fan located in the stack at the top of the tower.

BCSA0315682

can be either a compression-cycle or an absorption type (see Figure 3-4). In both systems, cooling water is required to condense the refrigerant vapor (i.e., Freon® in a compression-cycle system and water in most absorption-type systems). (Note: Water-ammonia compression systems also have been used with ammonia as the refrigerant. However, in HVAC systems, water/lithium bromide compression systems predominate.) In the absorption system, cooling water also is required for the absorber. Water is supplied from a cooling tower at about 29°C (85°F), and it returns to the tower at about 35°C (95°F). The condenser typically is constructed of copper tubes and a cast steel shell. The condensed refrigerant passes to the evaporator where warm water from the air handling units transfers heat that evaporates the refrigerant, thereby chilling the water. The chilled water is pumped back to the air handling units.[8,9]

The required tower size for a given air conditioning load depends on the type of chiller system used. Compression-type equipment is designed for a temperature difference of 5.6°C (10°F) across the tower and a recirculating rate of 11.6 liters per minute (ℓ/min) (3 gallons per minute [gal/min]) per ton of air conditioning. Absorption-type equipment is designed for a temperature difference of 8.3°C (15°F) across the tower and a recirculating rate of 15.1 ℓ/min (4 gal/min) per ton of air conditioning. A ton of air conditioning is defined as 3,514 Watts (W) (12,000 Btu/hour [h]). Compression-type equipment will reject 4,392 W (15,000 Btu/h) to the cooling tower because for each ton of air conditioning, an additional 878 W (3,000 Btu/h) is required to perform the work needed to compress the refrigerant. When absorption-type equipment is used, 8,785 W (30,000 Btu/h) are rejected at the cooling tower for each ton of air conditioning because 5,270 W (18,000 Btu/h) are required to drive the process. Water is evaporated at the rate of 7.2 ℓ (1.9 gal) and 14.0 ℓ (3.7 gal) per hour per ton of cooling in the cooling towers used with compression and absorption systems, respectively.[10]

3.4 CHEMICAL TREATMENT PROGRAMS

3.4.1 Purpose

Chemicals are added to the recirculating cooling water to inhibit the corrosive effects of the water, to control the rate of scaling and fouling, and to control the growth of micro-organisms in both the cooling tower and the heat exchangers. As evaporation occurs during cooling, the

BCSA0315688

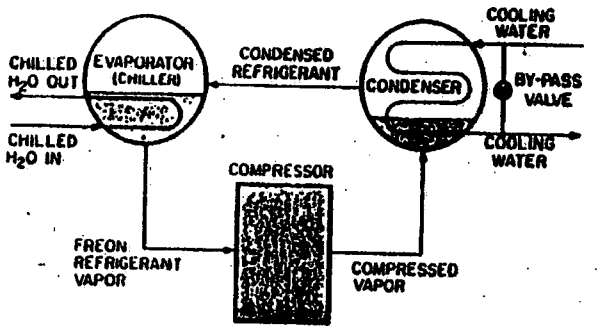

COMPRESSION-CYCLE
COOLING SYSTEM

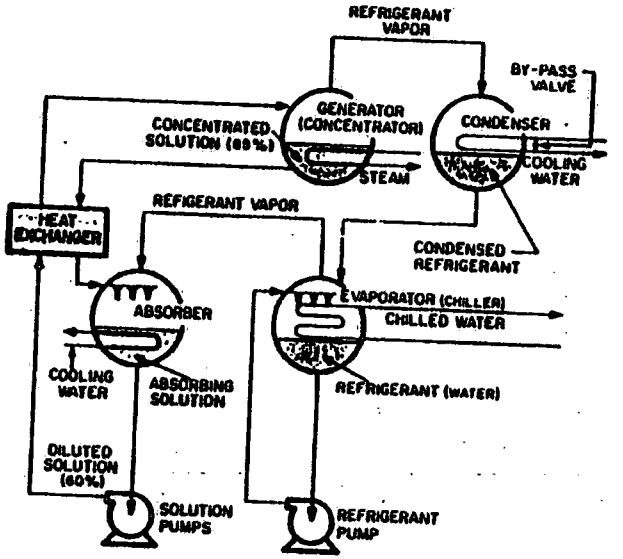

ABSORPTION-TYPE
COOLING SYSTEM

Figure 3-4. Cooling systems served by comfort cooling towers.
(Reprinted from Reference No. 10)

BCSA0315689

chemical constituents of the water become concentrated. A percentage of the recirculating water is intentionally discharged (blowdown) to maintain acceptable concentrations of suspended and dissolved solids. Also, as water cascades through the tower, some is entrained and emitted from the stack as drift. Fresh water is added to make up for the losses resulting from evaporation, blowdown, and drift.

Typical water treatment program chemicals include (1) a corrosion inhibitor, (2) an antiscalant, (3) an antifoulant, (4) a dispersant, (5) a surfactant, (6) a biocide, and (7) an acid and/or caustic soda for pH control. Chromium-based chemicals are corrosion inhibitors. Other chemicals fall into one or more categories, and many combinations of various chemicals are used. The quality of the cooling tower water supply directly affects the type and quantity of chemicals required to maintain satisfactory protection. The three problems--corrosion, scaling and fouling, and microbiological growth--and the chemicals used to control them are discussed later in this section.

Major water chemistry parameters that affect the selection of chemical treatment programs include pH, calcium hardness (calcium ion concentration), alkalinity (bicarbonate, carbonate, and hydroxide ions), chloride, sulfate, silica, dissolved solids (conductivity), and suspended solids. Water quality also directly affects the number of cycles of concentration that can be maintained. The number of cycles of concentration is defined as the ratio of conductivity or calcium hardness of the recirculating water to that of the makeup water. The maximum level of either parameter established is based on the chemical treatment program and the acceptable rates of corrosion and scaling.

3.4.2 Corrosion.

3.4.2.1 Description. Corrosion is the oxidation of a metal by some oxidizing agent in the environment. The area over which metal is oxidized (corroded) is called the anode; the area over which the oxidizing agent is reduced is called the cathode. Many metals contain both anodic and cathodic areas. As corrosion proceeds, electrons flow through the metal from the anode to the cathode. In water, an electrochemical cell is formed as cations migrate toward the cathode and anions move toward the anode. The water is the conducting fluid or electrolyte. The flow of

BCSA0315690

electrons through the metal (external circuit) is the corrosion current, which is limited by the rate at which electrons are accepted by the oxidizing agent at the cathode. Figure 3-5 illustrates the mechanisms for corrosion in a single metal. Galvanic corrosion occurs when two different metals are in physical contact. Depending on their relative characteristics, one of the metals will function as an anode and the other as a cathode, and the anodic metal will corrode. Conditions that increase the conductivity of the water (e.g., high dissolved solids content or high temperature) increase the rate of corrosion.

Several types of corrosion occur in cooling water systems including general etching, pitting, tuberculation, and crevice corrosion. The least harmful is the general etching that occurs uniformly over the surface of the metal. Pitting is the formation of small holes from corrosive attack at the metal surfaces, and tuberculation refers to the corrosion products cap that forms over a pit. Crevice corrosion occurs where metallic and nonmetallic materials contact. Corrosion can be retarded, but not totally prevented, and the rate of corrosion that is acceptable varies among systems. Inhibitors are added primarily to protect the heat transfer surfaces, which are the most critical metal components in the system, from corrosion. The terms and corrosion rates presented in Table 3-1 are generally used to describe the severity of carbon steel and copper corrosion.

Chemicals used in a recirculating water system are either anodic or cathodic corrosion inhibitors, and the mechanisms by which they protect the metal are passivation, precipitation, and/or adsorption. Anodic corrosion inhibitors function by providing a barrier film or deposit at anodic areas that prevents the electrolytic half-cell reaction from occurring. Cathodic inhibitors prevent the other half-cell reaction from occurring by providing a barrier film or deposit at cathodic areas. Table 3-2 lists various anodic and cathodic inhibitors. The barrier created by passivation is an oxide that forms on the metal surface, and the barrier created by precipitation is an insoluble precipitate that coats the metal surface. Generally, anodic inhibitors are passivators, and cathodic inhibitors are precipitators. Molecules that have polar properties provide a barrier by adsorbing on the entire metal surface. Adsorption inhibitors are usually organic compounds.[10-12]

BCSA0315691

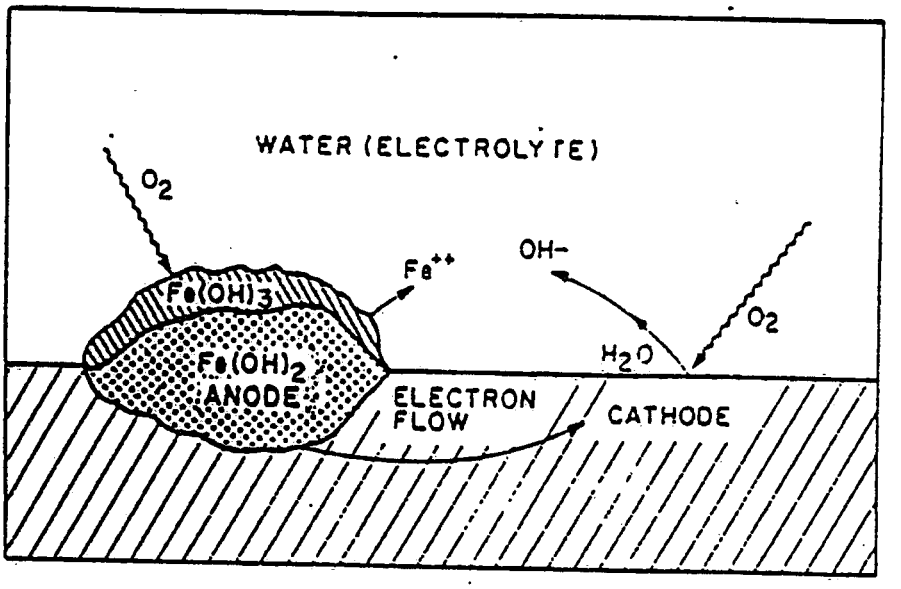

ANODIC REACTIONS

$Fe \rightarrow Fe^{++} + 2e^-$

$Fe^{++} + 2OH^- \rightarrow Fe(OH)_2$ (soluble form)

$Fe(OH)_2 + H_2O + \frac{1}{2}O_2 \rightarrow 2\ Fe(OH)_3$ (insoluble red-brown deposit)

CATHODIC REACTIONS

$2e^- + 2H^+ \rightarrow H_{2gas}$

$1\frac{1}{2}H_2 + O_{2gas} \rightarrow H_2O + OH^-$

Figure 3-5. Corrosion mechanism on carbon steel surface. (Reprinted from Reference No. 10)

BCSA0315692

TABLE 3-1. CORROSION RATES OF METALS[12]

Description	Corrosion rates, μm/yr (mil/yr)	
	Carbon steel	Copper alloy
Negligible	<25.4-50.8 (<1-2)	<2.54 (<0.1)
Mild	50.8-127.0 (2-5)	3.81-5.08 (0.15-0.2)
Moderate	127.0-254.0 (5-10)	5.08-8.89 (0.2-0.35)
Severe	>254.0 (>10)	12.7-25.4 (0.5-1)

BCSA0315693

3.4.2.2 Chromium-Based Inhibitors. Chromates historically have provided the best protection against corrosion for the money and effort. Very little monitoring and control of concentration are required. Even if the inhibitor feed is temporarily interrupted, the existing film will continue to provide protection for several days.

Chromate concentration typically must be maintained above 200 parts per million (ppm) if the chromates are used alone in the recirculating water. However, chromates (which are anodic inhibitors) typically are used in combination with cathodic inhibitors. In these combinations, less chromate provides the same corrosion protection that is provided by high concentrations of chromate alone. Vendors provide many chromate-based combinations for use in CCT's; and definitions of low-, very low-, and ultra-low-chromate concentrations vary. In all cases, the chromate concentration is less than 30 ppm. For the purposes of this document, all of these treatment program classifications will be considered low-chromate.

The chemicals most commonly added to chromate-based formulations are zinc and phosphate; but organic compounds, polysilicates, and molybdates also have been used. (The same chemicals are used in treatment programs without chromates and are discussed in greater detail in Section 5.1.1.) Table 3-3 provides concentrations and typical operating conditions of some of the formulations discussed in various publications, which generally focus on industrial tower systems.[10-12] However, at those facilities that use chromates in the CCT's, the same treatment program is used in both the CCT's and the industrial process cooling systems. Chromate is an excellent copper corrosion inhibitor, but many publications indicate that it is common to add the organic triazole inhibitors to low-chromate formulations that are used in systems with copper heat transfer surfaces; this was confirmed by some of the EPA studies of chemical treatment programs used at CCT's (case studies).[13-17] However, this does not mean that triazoles are more effective or even as effective as chromate at protecting copper from corrosion. The addition of triazoles also protects copper surfaces from reactions with phosphonate dispersants.

The cathodic half-cell reaction controls the rate of corrosion at the anode. Thus, for a given cathodic reaction rate, the same mass of the anode will corrode. If the cathodic reaction is not controlled by

BCSA0315694

TABLE 3-2. ANODIC AND CATHODIC CORROSION INHIBITORS

Anodic	Cathodic
Chromate	Polyphosphate
Molybdate	Zinc
Orthophosphate	Polysilicate
Nitrites	
Orthosilicate	

BCSA0315695

TABLE 3-3. CHROMATE-BASED CORROSION INHIBITORS[10-12,18]

Combination[a]	Concentration, ppm[b]	Operating conditions
Chromate/zinc	5-20/2.5-10	pH 6.5-7.0
Chromate/orthophosphate	20-25/3-3.5 5-10/10	pH 7.0-7.5 pH 6.2-6.8
Chromate/phosphate/zinc[c]	15-25/2-5/2-5	pH 6.0-7.0
Chromate/polyphosphate/zinc	10-30/3-5/3-5	pH 6.5-7.0 CaH 100-600 ppm[d]
	20-25/5-10/2.5-3.0	pH 6.0-6.5 CaH <400-600 ppm
	5/10/unk	pH 6.5-7.2
Chromate/zinc/phosphonate	15-25/2-4/3-5 2-3/2-3/5-10	pH 6.5-7.5 pH 6.5-7.0
Chromate/phosphonate	5-10/3-5	Not specified
Chromate/phosphonate/dispersant	5-15/2-6/2-6	pH 7.5-8.5
Chromate/dispersant	3-5/30	pH 7.5-8.5
Chromate/polysilicate	5-10/5-10	pH >7.5 Si <10 ppm
Chromate/zinc/dispersant	10-20/1-2/1.5-10	pH 7.0-9.0
Chromate/molybdate	10-30/1-5	pH >7.5

[a]In all combinations except chromate/polysilicate, the organic triazole corrosion inhibitors should be included at 1 to 10 ppm when the system contains copper.
[b]The components of some combinations can be formulated differently for different applications.
[c]Polyphosphate and/or orthophosphate.
[d]CaH is calcium hardness.

BCSA0315696

cathodic inhibitors or triazoles and if only small spots of the anodic surface remain unprotected, pitting may occur. Although chromate is an excellent inhibitor, the likelihood that small areas will remain unprotected is greater with lower chromate treatments than it is with higher chromate treatments.

3.4.3 Scaling and Fouling

3.4.3.1 Description. Scale formation occurs when dissolved solids and gases in cooling water reach their limit of solubility and precipitate out onto piping and heat transfer surfaces. Fouling occurs when deposits of dirt, leaves, and/or flocs of insoluble salts or hydrous oxides from corrosion agglomerate in the heat exchanger tubes. Scaling reduces the heat transfer capacity of heat exchangers, and fouling hinders the flow of water through heat exchangers. These conditions also contribute to pitting-type corrosion by creating corrosion cells and preventing the corrosion inhibitor from contacting the surface of the metal. Calcium carbonate is the most common scale found in cooling water systems, but calcium sulfate and calcium phosphate also can be formed in many systems. All three scales become less soluble, and, therefore, more likely to precipitate at higher temperatures. Calcium sulfate is more likely to precipitate at lower pH and the other two scales are more likely to precipitate at higher pH. Control of scaling and fouling depends on the control of deposition onto surfaces. The deposition can be affected by changing the solubility of scale-related salts, reducing the crystalline growth capacity of scale-related salts, and dispersing constituents that form fouling-related flocculations.

3.4.3.2 Antiscalants and Antifoulants

Chemical compounds that are commonly used and are the most effective in controlling the rate of scaling include polyphosphates and phosphonates. These compounds reduce the crystalline growth capacity of calcium salts. Certain phosphonate compounds affect the solubility of the calcium salts and reduce the formation of scale. Polymeric dispersants (with a molecular weight less than 20,000) reduce the potential for fouling.[10-12]

The phosphonates typically are added to chromate-zinc formulations as an alternative to phosphate, and scaling is better controlled than it is

BCSA0315697

with phosphate. Also, the amount of chromate can be reduced since the phosphonate system can be operated at a slightly higher pH.

The powerful oxidizing potential of chlorine can promote corrosion of copper if phosphonates also are present in the system. The addition of benzotriazole (or other azoles) and dispersants can minimize this effect. Phosphonates are also subject to biological oxidation, which results in the release of orthophosphate ions that can cause fouling as well as reduction of the recommended concentration of phosphonate. However, this fouling problem is much less severe than that produced in systems treated with polyphosphates.[12]

3.4.4 Microbiological Control

Three types of microorganisms are found in cooling tower water systems: bacteria, fungi, and algae. Bacteria are dispersed in the water, fungi invade wood components, and algae attach to surfaces in the tower. Slime produced by bacteria can coat and aggregate debris on heat exchanger surfaces, thereby reducing the efficiency of heat transfer. Biological deposits on metal surfaces also can accelerate pitting corrosion. Fungi can cause decay of wood either by surface attack (soft rot) or internal attack of the cellulose (white rot). Algal growth can coat the fill material and reduce the effectiveness of the water droplet formation and, thus, the effectiveness of heat transfer in the tower.

Microbiocides can be classified as oxidizing agents, enzyme poisons, organic chemical compounds, and miscellaneous compounds. The oxidizing agents include chlorine, bromine, and iodine. Enzyme poisons include methylene bisthiocyanate, acrolein, and heavy metals (e.g., copper sulfate, copper citrate, tin, phenylmercuric acetate, methyl mercury). Acrolein and the heavy metals are not widely used and are not known to be used in CCT's. Organic compounds normally require high dosage rates and include dodecylquamidine hydrochloride and quaternary ammonia salts. Most microbiocides used for treating cooling water are included in the categories above, but dithiocarbamates are a class of miscellaneous compounds that also are effective microbiocides. However, they reduce chromate and, thus, cannot be used in chromate-treated systems.[10,12]

BCSA0315698

Organic chemical compounds which either hydrolyze to relatively nontoxic forms or can be detoxified are also used as micobiocides. Hydrolyzable materials include 2,2-dibromo-3-nitrilopropionamide, chlorinated cyanurates, and halogenated hydantoins. Chemicals which are both hydrolyzable and detoxifiable are methylene bis-thiocyanate and bromonitrostyrene. Isothiazolin is a widely used biocide that can be detoxified.[10,18]

3.5 MAINTENANCE REQUIREMENTS

The maintenance requirements for CCT's and associated heat exchangers are affected by the effectiveness of the chemical treatment programs. The effectiveness of the corrosion inhibitor is important to the life expectancy of metal surfaces exposed to the recirculating water in both the tower and heat exchanger. Excessive corrosion will cause premature replacement of equipment and additional maintenance. Metal structural components of the tower such as steel columns and beams, connector plates and bolts, piping and pumps, valves, and controller equipment corrode from exposure to the cooling tower water. However, the most critical corrosion occurs in the heat exchangers. Many CCT operators have Eddy-current tests conducted periodically (every 1 to 5 years) to detect heat exchanger tubes in danger of failing, and these tubes are either replaced or plugged.[19-25] Some loss of efficiency or cooling capacity because of plugged tubes can usually be tolerated because cooling systems are often designed with a margin of safety.

Scaling occurs on the surfaces of CCT components and heat exchangers. Scaling in the CCT can reduce tower heat rejection capacity by interfering with splash or film fill water distribution and the formation of water droplets. Airflow characteristics also can be altered when airflow passages in the fill and drift eliminator become blocked; this increases the pressure drop across the system and reduces cooling efficiency. The tower fill and drift eliminator surfaces typically are inspected annually and cleaned if necessary. Winter is the most common time to perform the work since the demand, if any, on the system is minimal. Scaling and fouling in heat exchanger tubes reduce the heat transfer capacity because of the low conductivity of the crystalline film created on the tube surfaces and flow restrictions that result. The scale

BCSA0315699

$$\text{Evaporation rate} = (0.00085)(\text{Recirculation rate})(\Delta T \text{ of water}) \quad (2)$$

where:

Evaporation rate [=] ℓ/min (gal/min).

4.1.5 Blowdown Rate

Blowdown rates depend on cycles of concentration as shown in Equation 3.[4] Cycles of concentration can vary widely with the treatment program used and the makeup water quality. Cycles of concentration ranging from 2 to 8 have been reported. A uniform assumption of 5 cycles of concentration (the midpoint of the range) was used for all six model towers. The assumption is supported by several CCT operators.[6,11-13]

$$\text{Blowdown rate} = \frac{\text{Evaporation rate}}{(\text{Cycles of concentration}-1)} \quad (3)$$

4.1.6 Hexavalent Chromium Emissions

Data on chromate concentrations in CCT water treatment programs vary from less than 1 ppm to 20 ppm chromate.[9,15,16] Although a large amount of data has shown that the average concentration of chromate in industrial process cooling towers is 13 ppm, there are not sufficient data on CCT systems to justify using a concentration other than the midpoint of the observed range.[17-25] Therefore, the chromate concentration in the recirculating water for the model CCT's is assumed to be 10 ppm (10 ppm chromate is equal to 4.48 ppm Cr^{+6}).

Four chromium emission factors developed from EPA-sponsored tests performed on two industrial cooling towers equipped with lower efficiency drift eliminators are presented in Table 4-2.[26,27] These emission factors relate chromium emissions to the chromium concentration in the recirculation water in units of milligrams of Cr^{+6} emitted per ppm Cr^{+6} in the recirculating water per liter of recirculating water (mg Cr^{+6}/ppm Cr^{+6}/ℓ H_2O) (pounds of Cr^{+6} emitted per ppm of Cr^{+6} in the recirculating water per gallon of recirculating water [lb Cr^{+6}/ppm Cr^{+6}/gal H_2O]). Because the product of the recirculating water flow rate and the Cr^{+6} concentration in the water is the recirculating Cr^{+6} flow rate, the emission factor also can be expressed as mg Cr^{+6} emitted/mg Cr^{+6} recirculating (lb Cr^{+6}/lb Cr^{+6}). The recirculation rates, chromate

BCSA0315707

ATTACHMENT 15

United States Patent

[11] 3,627,032

[72] Inventors Philip S. Glad
Decatur;
Frank D. Parker, Sr., Atlanta; Richard W. Glad, Atlanta, all of Ga.

[21] Appl. No. 45,621
[22] Filed June 12, 1970
[45] Patented Dec. 14, 1971
[73] Assignee Parker Engineered Chemicals, Inc. Atlanta, Ga.

[54] COOLING TOWER WATER TREATMENT SYSTEM
9 Claims, 2 Drawing Figs.

[52] U.S. Cl. 165/32, 165/95, 165/107
[51] Int. Cl. G05d 23/00
[50] Field of Search ..... 165/95, 60, 32, 107, 12; 261/DIG. 3, DIG. 31

[56] References Cited

UNITED STATES PATENTS

2,859,766	11/1958	Shuldener	261/DIG. 31
3,282,277	11/1966	Hayman	261/DIG. 3
3,450,265	6/1969	Kreusch et al.	261/DIG. 3

Primary Examiner—Charles Sukalo
Attorney—Jones & Thomas

ABSTRACT: A water treatment system for a large capacity air conditioner or similar heat exchange system which includes a reservoir, a refrigeration unit, a cooling tower for spraying the water to the reservoir, and flow means for flowing water from the reservoir through the refrigeration unit to the cooling tower. Water makeup means is provided for adding additional fresh water to the reservoir, and a water drain system functions to drain away the stale water of the reservoir in response to the inflow of fresh makeup water. Chemical additive pumps function to add chemical compositions to the circulating water as makeup water is added to the system.

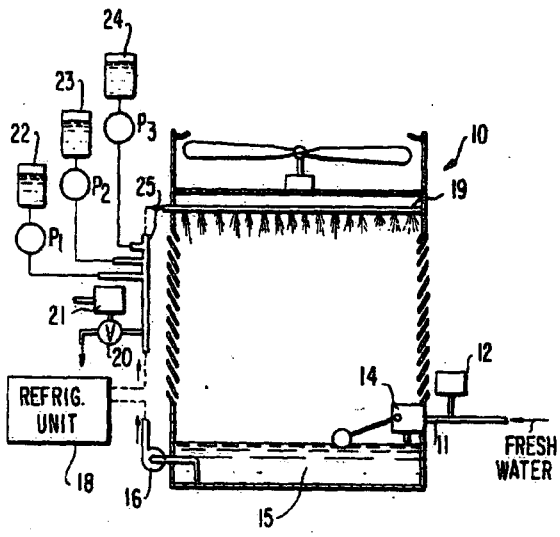

BCSA0315847

FIG. 1

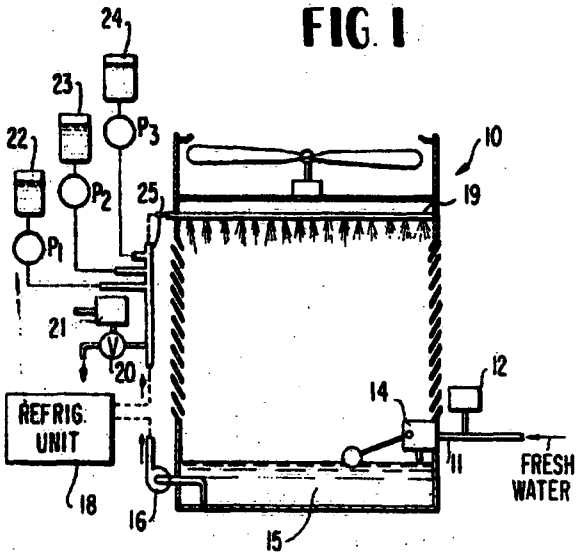

FIG. 2

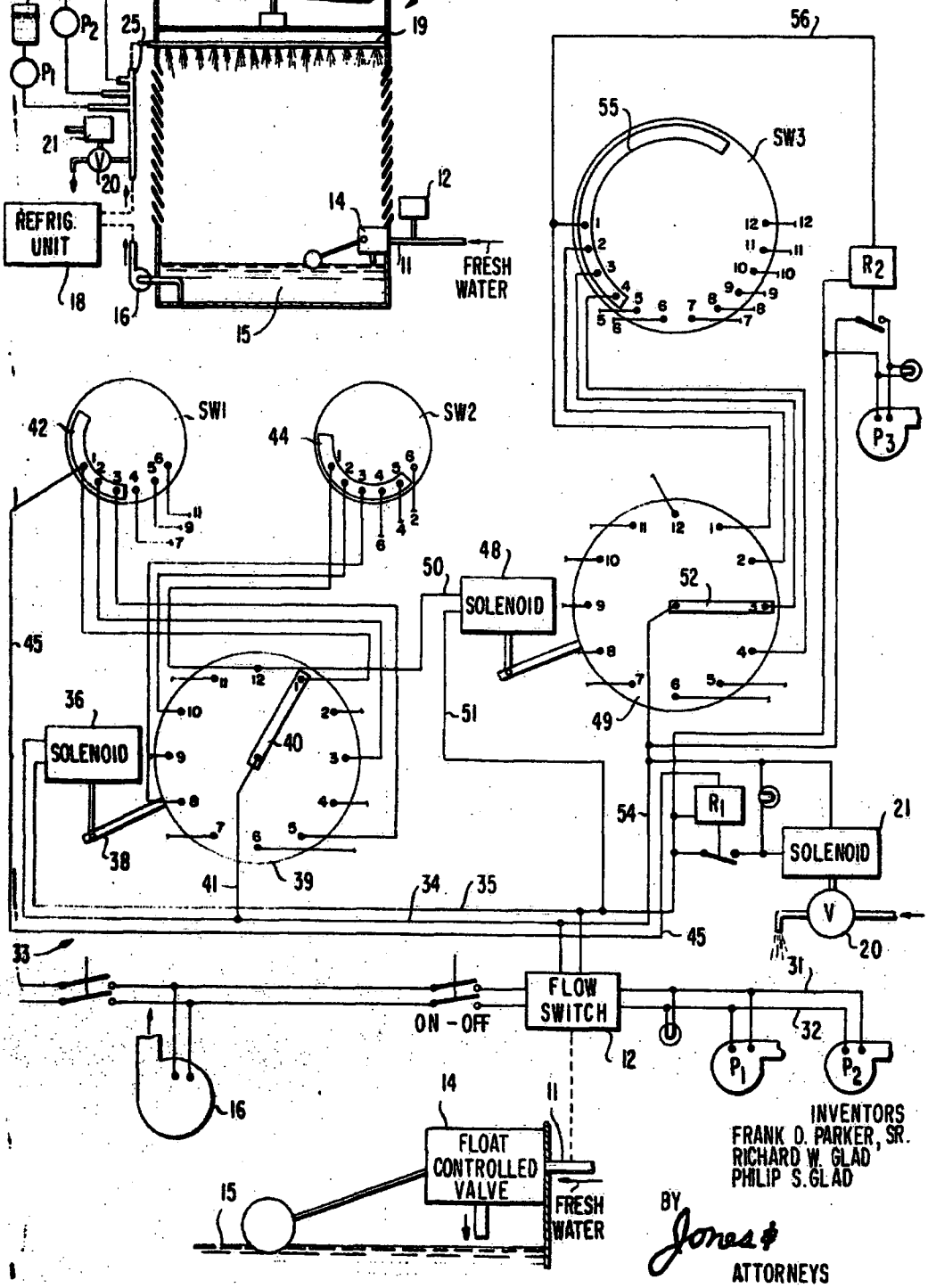

INVENTORS
FRANK D. PARKER, SR.
RICHARD W. GLAD
PHILIP S. GLAD
BY Jones &
ATTORNEYS

COOLING TOWER WATER TREATMENT SYSTEM

BACKGROUND OF THE INVENTION

In the water circulation system for a large capacity air-conditioning unit, the hot water flowing from the heat exchanger of the air conditioning unit is usually directed to the upper end of a cooling tower where it is sprayed in the air down through a relatively open tower for cooling purposes. When the water reaches the reservoir at the lower end of the tower, it is available for recirculation through the system.

Water normally contains minerals and when the water is evaporated from the flow system as it flows down through the cooling tower the minerals are generally left behind and tend to accumulate in the liquid remaining in the reservoir, and the spraying of the water causes the water to become substantially saturated with oxygen. The minerals eventually drop out of solution from the saturated water and form scale on the surfaces of the cooling tower and in the conduits of the heat exchanger and other flow conduits of the system. The scale forms an insulating barrier and inhibits the transfer of heat at the heat exchanger and narrows the flow passage ways of the flow conduits. The oxygen of the water tends to react with the metal surfaces of the structure and to corrode and to otherwise deteriorate the structure. Moreover, the warm water of the system forms a breeding place for algae, bacteria, fungae, etc., which tends to block the flow system of the apparatus.

Because of these general problems, it has become customary to inject chemical compositions in the cooling tower water. These chemical compositions include scale and corrosion inhibitors and occasionally an algaecide. In the past the automated devices utilized to add these chemicals to the flow systems usually included a pump for pumping small quantities of liquid compositions into the cooling tower water as the tower pump operated to flow water from the reservoir through the heat exchanger and to the spray at the top of the cooling tower. The chemical pump thus ran continuously with the tower pump, without regard to the condition of the water in the cooling tower. Moreover, the algaecides were usually added by hand in large quantities by a maintenance man, since algaecides do not seem to work effectively when added continuously to such a system. In addition, the devices utilized a water bleed system to bleed the stale water from the cooling tower so that the stale water saturated with large quantities of minerals and chemicals could be progressively replaced with fresh water. The devices utilized to perform the water bleed function have usually been embodied in a bleed conduit that is opened by a valve in response to the operation of the cooling tower pump. Thus, the bleed of the stale water was slow and continuous and routed through a relatively small valve opening which was easily blocked by debris in the water, etc., and rendered inoperative.

In order that the addition of chemicals to the water of a cooling tower could be more responsive to the condition of the water, some devices have been developed for testing the electrical conductivity of the water and actuating a chemical pump in response to a certain level of water conductivity. These systems function properly only on a temporary basis since the device for continuously testing the conductivity of the water becomes coated with scale and becomes ineffective and inaccurate. The chemical additive system therefore becomes unreliable and requires continual maintenance.

SUMMARY OF THE INVENTION

Briefly described, the present invention comprises a water treatment system for the water circulation system of a large capacity air-conditioning system which functions to maintain the water in the system in a suitable condition for passage through the heat exchanger and into engagement with the surfaces of the flow system. Makeup water is added to the reservoir of the cooling tower to replace the water lost from evaporation and windage, and chemicals are added to the water in the flow system as the water flows from the heat exchanger to the spray means at the top of the cooling tower.

The chemicals are added only during the operation of the cooling tower pump and as the makeup water enters the reservoir. Thus, when the water level in the reservoir is low, which is when the concentration of minerals and oxygen is relatively high, fresh water and chemicals are added to the system to reduce the concentration of minerals in the water and their deleterious effects. If the atmospheric conditions change so that the frequency of water replenishment is reduced, the minerals left behind in the water due to evaporation of the water will be reduced and the necessity of adding chemicals to the water will be reduced. Thus, the system functions to add chemicals to the water in response to the flow of makeup water to the system, which normally corresponds to the concentration of minerals in the water.

Thus, it is an object of this invention to provide a water treatment system for a water-cooled air-conditioning system which prolongs the life of the components of the system and reduces the frequency of inspection, maintenance and repair of the system.

Another object of this invention is to provide a cooling system that controls the composition of its cooling water to reduce the formation of scale, oxides, algae, bacteria, etc., on the surfaces of the system and in the water of the system.

Other objects, features and advantages of the present invention will become apparent upon reading the following specification when taken into conjunction with the accompanying drawing.

BRIEF DESCRIPTION OF THE DRAWING

FIG. 1 is a schematic elevational view of a cooling tower and cooling system of a large capacity air-conditioning system.

FIG. 2 is an electrical schematic of the control system for the cooling system of FIG. 1.

DESCRIPTION OF THE PREFERRED EMBODIMENTS

Referring now in more detail to the drawing, in which like numerals indicate like parts throughout the several views, FIG. 1 illustrates water cooling tower 10, fresh water inlet conduit 11, flow switch 12, and float-controlled valve 14 which controls the inlet of the water to the reservoir or sump 15 of the cooling tower. Cooling tower recirculating pump 16 functions to flow the water from sump 15 through the heat exchanger (not shown) of refrigeration unit 18 and to the spray conduit 19 in the upper portion of the cooling tower 10. The water treating means includes bleed valve 20 controlled by solenoid 21, and diaphragm injection pumps P1, P2 and P3 arranged to inject chemicals from supply sources 22,23 and 24, respectively, into recirculating conduit 25 downstream from recirculating pump 16 and refrigeration unit 18. Bleed valve 20 is positioned downstream from refrigeration unit 18 so that the hottest water of the system is discharged, and pumps P1, P2 and P3 are positioned downstream from bleed valve 20 so that the chemicals from these pumps will not be lost through the bleed valve and will be injected into the hottest water of the system where it is most effective.

As is illustrated in FIG. 2, when pump 16 is operating and float controlled valve 14 opens to flow fresh water through conduit 11 to sump 15, flow switch 12 will detect the flow of water and will function to energize the system. When flow switch 12 is closed due to the flow of fresh water through conduit 11, pumps P1 and P2 are energized through conductors 31 and 32, and the water treating means or variable control mechanism 33 is energized through terminal conductors 34 and 35. Solenoid 36 is immediately energized and functions to move the lever 38 of stepping switch 39; however, the rotatable conductor arm 40 of stepping switch 39 will move only when solenoid 36 has been deenergized. Movable arm 40 of stepping switch 39 is connected through conductor 41 to conductor 34. The odd-numbered contacts of the 12 contacts on stepping switch 39 are connected to the six contacts on selector switch SW1. The crescent conductor 42 of selector switch SW1 is arranged to progressively cover the contacts of the

selector switch. The even-numbered contacts of stepping switch 39 are connected to the contacts of selector switch SW2, and its crescent conductor 44 is also arranged to make progressive contact of its contacts. With this arrangement, as rotatable arm 40 of stepping switch 39 rotates and sequentially engages its contacts, it will be alternately connected to selector switches SW1 and SW2.

When rotatable arm 40 of stepping switch 39 engages any one of its odd-numbered contacts, and if the crescent conductor 42 of selector switch SW1 is moved so that it engages all of its contacts, conductor 45 connected to contact numbered 1 of selector switch SW1 will be connected to the rotating conductor arm 40 on alternate positions of the conductor arm, which energizes relay R1 and makes a circuit to solenoid 21 to open bleeder valve 20. Thus, the sump 15 will be bled by bleeder valve 20 on alternate operations of float controlled valve 14. Of course, if the crescent conductor 42 of selector switch SW1 is repositioned so as to cover less than all of its contacts, the operation of bleeder valve 20 will be less frequent. For example, if crescent conductor 42 of selector switch SW1 is positioned as shown so as to cover the first three of its six contacts, bleeder valve 20 will function to operate on the first, third and sixth operation of float-controlled valve 14, and will not function again for the remaining cycles of operation of the float controlled valve until a total of 12 cycles of the float controlled valve has occurred. Thus, bleeder valve 20 will function during three of the 12 cycles of the float-controlled valve.

When rotatable contact arm 40 of stepping switch 39 engages the even-numbered contacts of the stepping switch, and if the crescent conductor 44 of selector switch SW2 is moved so that it engages all six of its contacts, solenoid 48 of stepping switch 49 will be energized through its conductors 50 and 51 on alternate positions of rotatable conductor arm 40 of stepping switch 30. This causes stepping switch 49 to move its rotatable conductor arm 52 on alternate cycles of float controlled valve 14. Of course, if the crescent conductor 44 of selector switch SW2 is in engagement with less than all of its contacts, the frequency of operation of solenoid 48 will be reduced. For instance, if crescent conductor 44 of selector switch SW2 is in engagement with five of its six contacts, solenoid 48 will be operated on the fourth, sixth, eight and 10th and 12th positions of rotatable conductor 40, but not on position numbered 2, so that solenoid 48 is operated only during five out of the 12 cycles of float-controlled valve 14.

Rotatable conductor arm 52 of stepping switch 49 is connected to terminal conductor 34 through its conductor 54, and its 12 contacts are connected to the 12 contacts of selector switch SW3. Thus, a circuit will be made to one of the contacts on selector switch SW3 for every position of rotatable conductor arm 52 of stepping switch 49. If the crescent conductor 55 of selector switch SW3 is in engagement with all of its 12 contacts, a circuit will be made to relay R2 through conductor 56 on every operation of float-controlled valve 14, and relay R2 will function to operate pump P3 during every cycle. Of course, if crescent conductor 55 of selector switch SW3 is in engagement with fewer than all of its contacts, pump P3 will be operated less frequently. For instance, if crescent conductor 55 is in engagement with the first four of its 12 contacts, pump P3 will operate when rotatable conductor arm 52 of stepping switch 49 is in engagement with its first four contacts. When the rotatable conductor arm 52 moves beyond the first four contacts, pump P3 will not be operated. Since rotatable conductor arm 52 moves only on alternate operations of float-controlled valve 14, pump P3 will then operate during the first eight cycles of float-controlled valve 14, and will be dormant during the next 16 cycles of the float controlled valve. With this arrangement, pump P3 will function to cause a surge of the chemical it injects into the water of the cooling tower, and then no more of its chemical will be injected for a prolonged time.

Pump P1 will normally be the pH control pump of the system and will function to inject sulfuric acid or a similar substance into the recirculating water. Pump P2 will be the corrosion inhibitor pump and will function to inject a chromate-base liquid into the recirculating water. Pump P3 is the algaecide pump and will function to inject an ammonium-based liquid into the recirculating water. It should be noted from FIG. 1 that bleed valve 20 is located upstream from pumps P1, P2 and P3, so that the water taken from the system is removed upstream from the location where the chemicals are injected into the system.

While pumps P1, P2 and P3 are schematically illustrated as being centrifugal pumps, it will be understood that these pumps are diaphragm pumps and function to inject accurate amounts of the chemicals into the system. Moreover, while the pumps are operating, pumps P1 and P2 function to inject approximately one-fourth the quantity of liquid into the recirculating water as pump P3, and all the pumps can be adjusted to control the quantity of liquid being pumped by controlling the amplitude of diaphragm movement and the timing of the pumping by adjustment of the variable control system 33.

Generally, Pump P3 will be set for less frequent operation than pumps P1 and P2, and since pump P3 functions to flow approximately four times the volume of liquid as pumps P1 and P2, the water treating means functions to inject a massive dose of algaecide at spaced time intervals. This arrangement is beneficial to the system in that algae occasionally becomes immune to an algaecide if it is in continuous contact with a constant dose of the algaecide. The massive infrequent dosage of algaecide tends to completely overcome any algae in the flow system on an infrequent basis, which is all that is necessary to control the algae under normal circumstances. Of course, switches SW2 and SW3 can be adjusted as may be suitable for the particular geographic and atmospheric conditions to increase or decrease the frequency of operation of Pump P3 as may be desired. In a similar manner, the frequency of operation of bleed valve 20 can be adjusted by changing the setting of switch SW1, as previously described.

Since the chemical compositions are added to the flow system as the water enters the upper end of the cooling tower, the surfaces of the cooling tower will be contacted with the chemical compositions and the chemicals will be sprayed with generally even distribution onto the top surface of the water in the reservoir. This keeps any blind spots from occurring in the system where the chemicals might not reach an area of the reservoir.

While this invention has been described in detail with particular reference to preferred embodiments thereof, it will be understood that variations and modifications can be effected within the spirit and scope of the invention as described hereinbefore and as defined in the appended claims.

I claim:

1. A flow system comprising a reservoir for water or the like, a heat exchange unit, spray means for spraying water to said reservoir, recirculating flow means for flowing recirculating water from said reservoir through said heat exchange unit and to said spray means, water makeup means responsive to the level of water in said reservoir for intermittently adding additional water to said reservoir, and water treating means responsive to the flow of water from said water makeup means to said reservoir and to the flow of recirculating water for treating the water flowing from said reservoir to said spray means, said water treating means including drain means for draining water from said flow system during less than all of the cycles of operation of said water makeup means.

2. The flow system of claim 1 and wherein said drain means comprises means for draining water from the water in said flow means downstream from said heat exchange unit and upstream from said spray means, and wherein said water treating means further comprises chemical additive means for adding a chemical composition to the water in said flow means downstream from the point in said flow means where the water is drained and upstream from said spray means.

3. The flow system of claim 1 and wherein said water treating means comprises chemical additive means selectively

BCSA0315850

responsive to at least some of the sequential cycles of intermittent addition of make up water by said water make up means for adding a chemical composition to the water of the flow system.

4. The flow system of claim 1 and wherein said drain means is selectively responsive to one-half or fewer of the cycles of intermittent addition of makeup water by said water makeup means for draining water from the water of the flow system, said water treating means further comprising first chemical additive means responsive to each of the cycles of intermittent addition of make up water by said water makeup means during the operation of said flow means for adding a chemical composition to the water of the flow system, and second chemical additive means selectively responsive to various cycles of the intermittent addition of makeup water by said water makeup means for adding a chemical composition to the water of the flow system.

5. A flow system comprising a reservoir for containing water or the like,

a heat exchange unit,

spray means arranged to spray water through a cooling tower to said reservoir,

flow means for flowing the water from said reservoir through said heat exchange unit to said spray means,

water makeup means responsive to the level of water in the said reservoir for flowing water or the like to said reservoir when the level of water in said reservoir is low and until the level of water in said reservoir reaches a predetermined level,

water drain means selectively responsive to one-half or fewer of the cycles of water flow through said water makeup means during the operation of said flow means for draining water flowing from said heat exchange unit to said spray means only during the flow of water by said water makeup means,

first chemical additive means responsive to each of the cycles of water flow through said water makeup means during the operation of said flow means for adding a chemical composition to the water flowing from said heat exchange unit to said spray means, and

second chemical additive means selectively responsive to all or fewer of the cycles of water flow through said water makeup means during the operation of said flow means for adding a chemical composition to the water flowing from said heat exchange unit to said spray means.

6. In a flow system comprising a cooling tower, a reservoir below the cooling tower, a heat exchange unit, and flow means connected between the reservoir, heat exchanger and cooling tower for recirculating water from the reservoir through the heat exchanger and to the cooling tower, and a water makeup means responsive to the level of water in said reservoir to flow makeup water to the reservoir, the improvement therein comprising water treating means operative only during the flow of water through the water makeup means for adding chemical compositions to the water being recirculated in said flow system during each cycle of operation of said water makeup means and for draining a portion of the recirculating water during less than each cycle of operation of said water makeup means.

7. The invention of claim 6 and wherein said water treating means comprises at least one pump means operative only during the flow of water through the water makeup means and during the flow of water through the flow means to add a chemical composition to the water flowing through the flow means.

8. The invention of claim 6 and wherein said water treatment means comprises at least two pump means selectively operative during various cycles of operation of the water makeup means to add chemical compositions to the water of the flow system.

9. A flow system comprising a reservoir for water or the like, a heat exchanger, spray means for spraying the water to said reservoir, recirculating flow means for flowing water from said reservoir through said heat exchanger and to said spray means, water makeup means responsive to the level of water in said reservoir for intermittently adding water to said system, water drain means responsive to selected cycles of said water makeup means for draining water from said system only during the flow of makeup water to said system, first chemical additive means for adding a first chemical composition to said flow system upon each cycle of said water makeup means and a second chemical additive means for adding a second chemical composition to said system at selected ones of the cycles of said water makeup means.

* * * * *

BCSA0315851

ATTACHMENT 16

US 20040134213A1

(19) United States

(12) Patent Application Publication (10) Pub. No.: US 2004/0134213 A1

Dudley et al. (43) Pub. Date: Jul. 15, 2004

(54) AIR CONDITIONING CONDENSATION DRAINAGE SYSTEM

(76) Inventors: William E. Dudley, Weimer, TX (US); C. Ross Dutton, Friendswood, TX (US)

Correspondence Address:
JAMES L. JACKSON
ANDREWS & KURTH, L.L.P.
SUITE 4200
600 TRAVIS
HOUSTON, TX 77002 (US)

(21) Appl. No.: 10/341,920

(22) Filed: Jan. 13, 2003

Publication Classification

(51) Int. Cl.[7] F25D 23/12; F25D 21/14

(52) U.S. Cl. 62/285; 62/259.2

(57) ABSTRACT

An air-conditioning condensate drainage system for mounting to the roof membrane of the roof structure of buildings or for construction thereof directly onto the roof membrane of a building structure. The air-conditioning condensate drainage system is defined by one or more strips of material having an isolation membrane having a bottom surface for assembly to a roof membrane. A pair of spaced ridge elements project upwardly from the isolation membrane and cooperate with the isolation membrane to define an air-conditioning condensate drainage channel. In the alternative, ridge strips may be disposed in spaced relation and fixed directly to a roof membrane to define condensate drain channels along the roof membrane to in-roof drains. The condensate drain strip or ridge strips may be molded or extruded and maybe formed directly on and adhered to or fixed to the roof membrane to define the condensate drain channels.

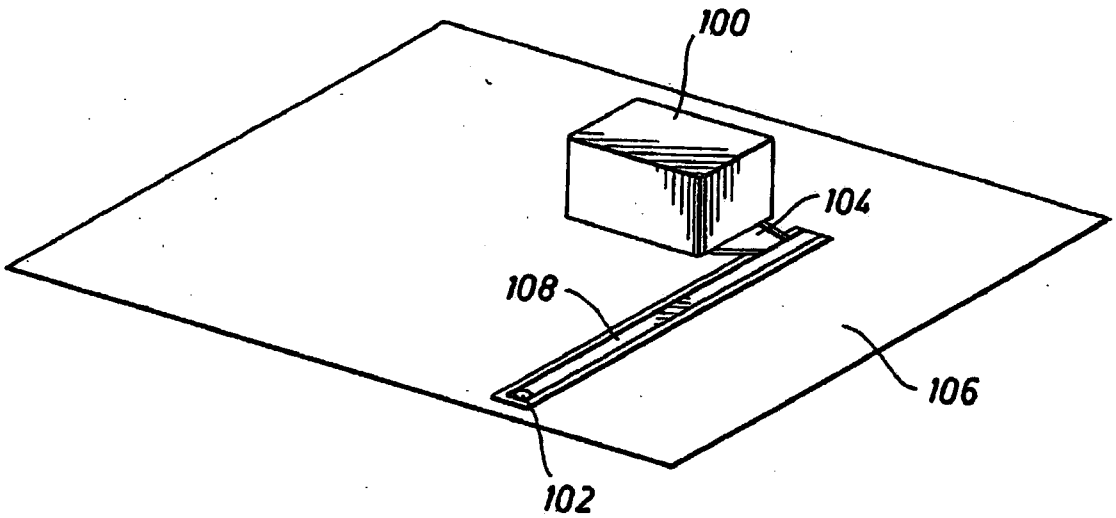

FIG. 1

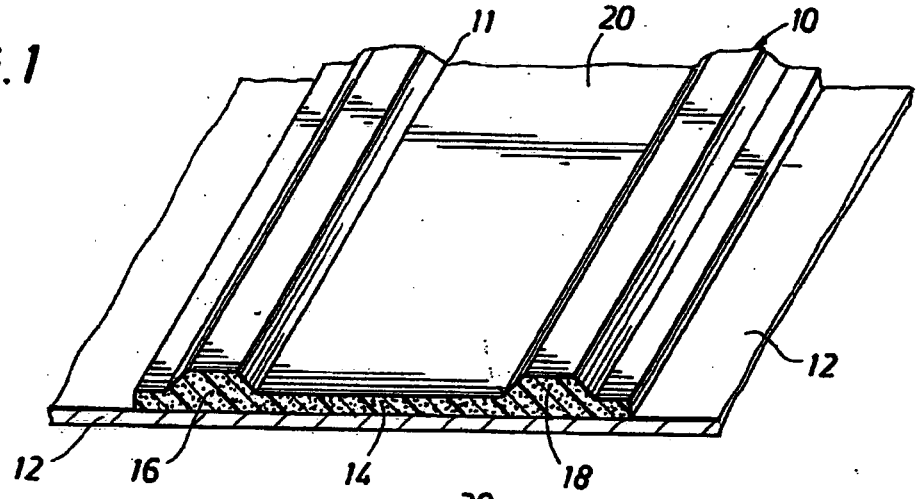

FIG. 2

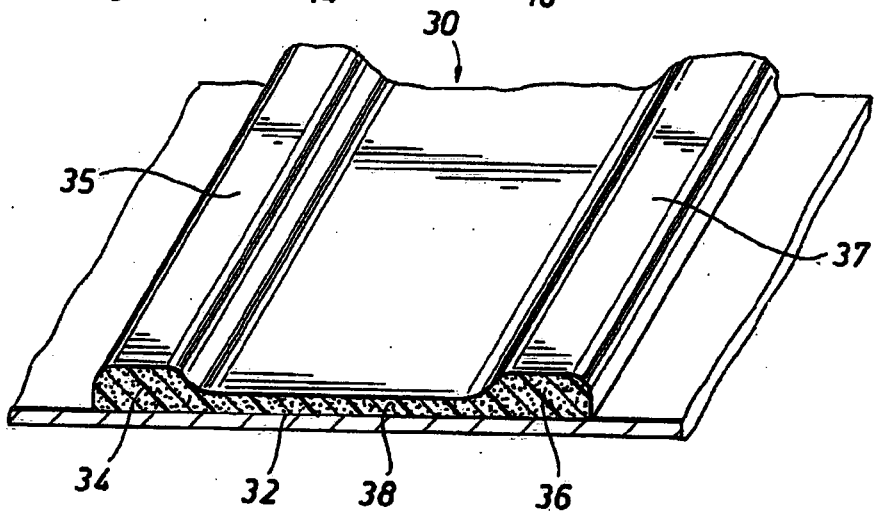

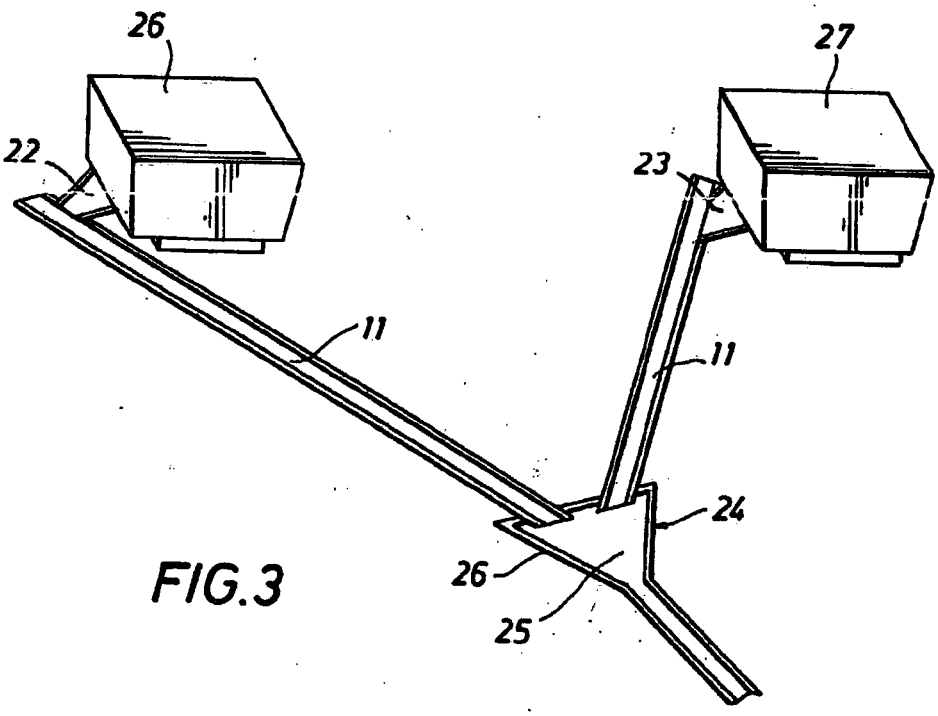

FIG. 3

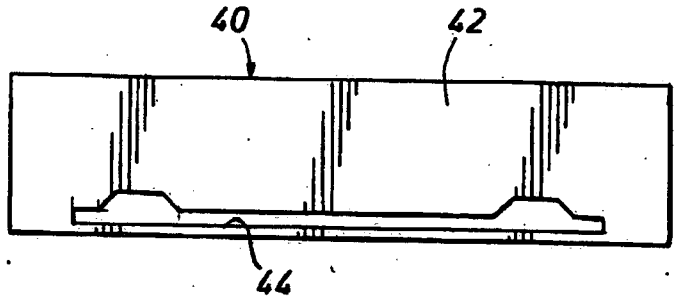

FIG. 4

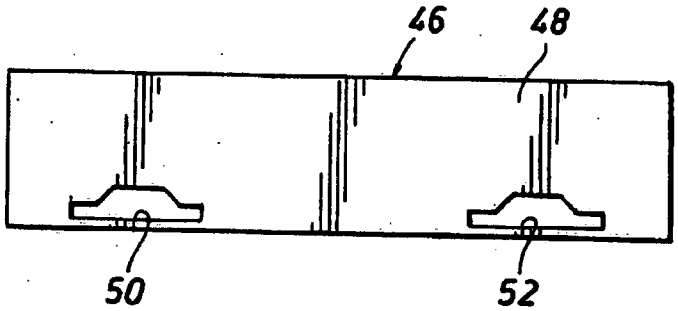

FIG. 5

FIG. 6

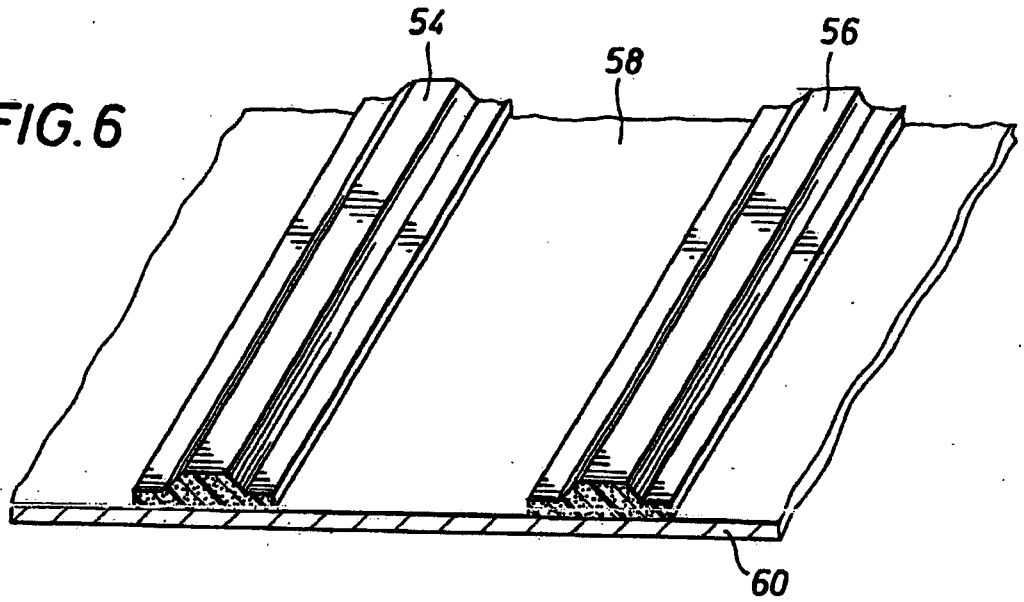

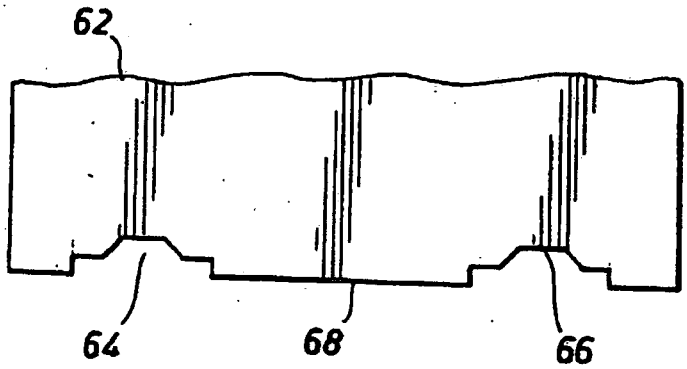

FIG. 7

FIG. 8

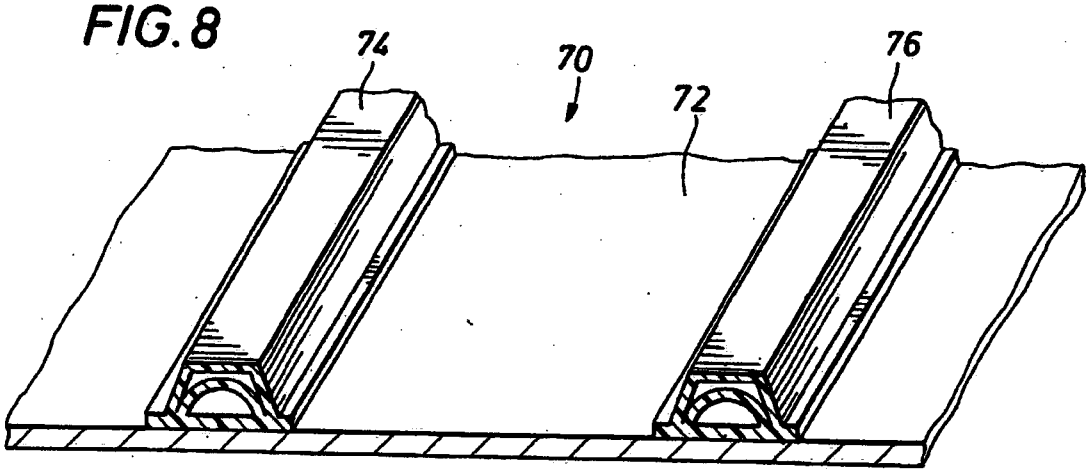

FIG. 9

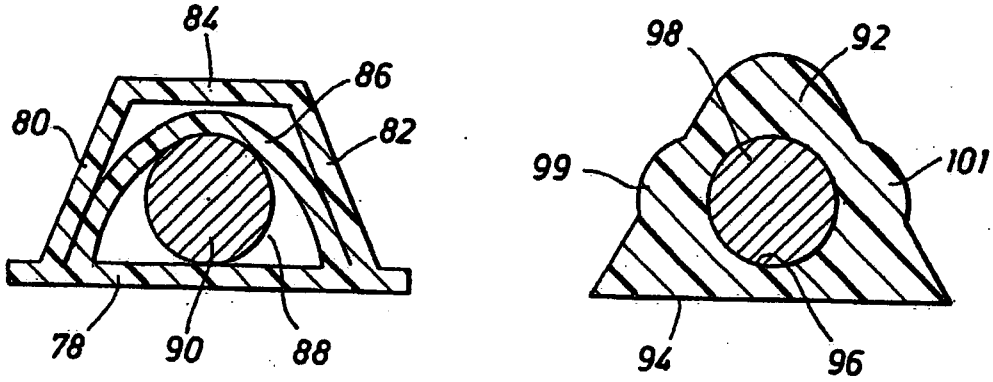

FIG. 10

FIG. 11

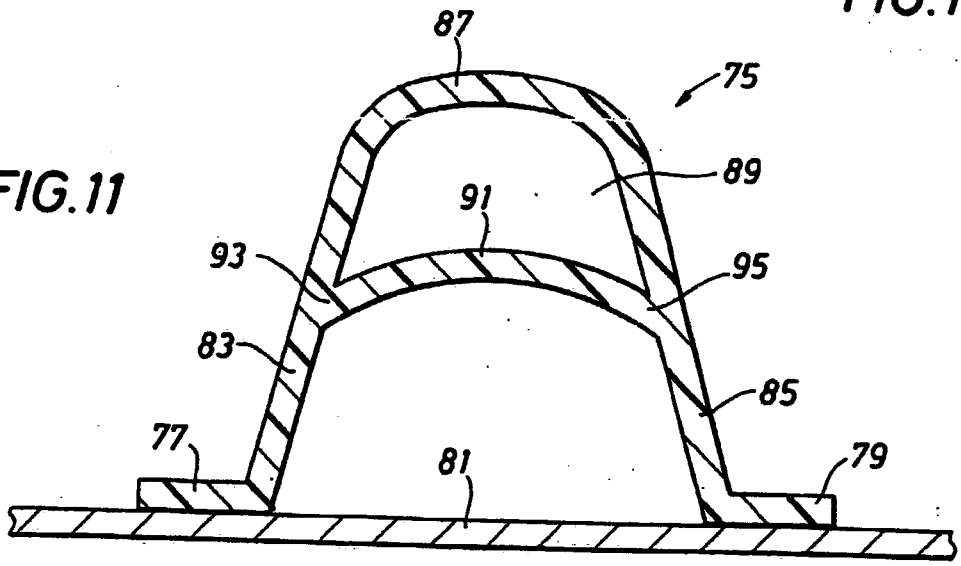

FIG.12

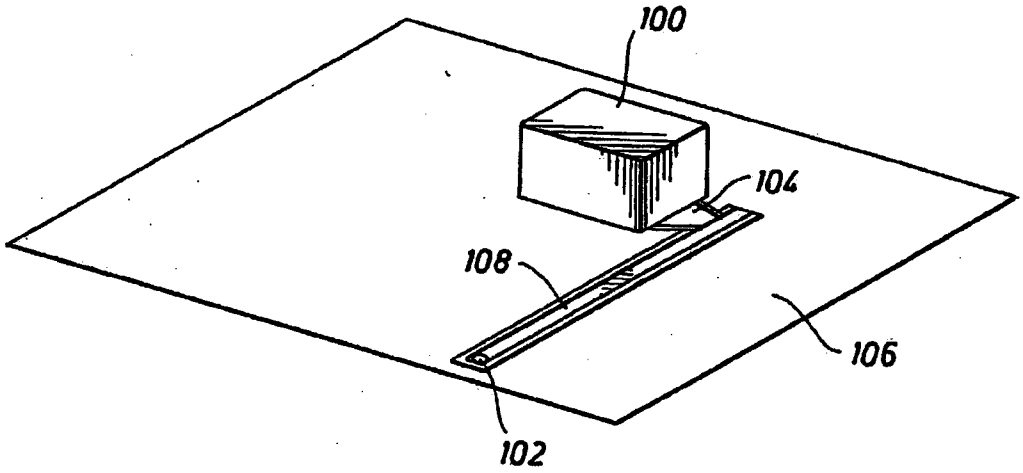
100
104
108
106
102

FIG.13

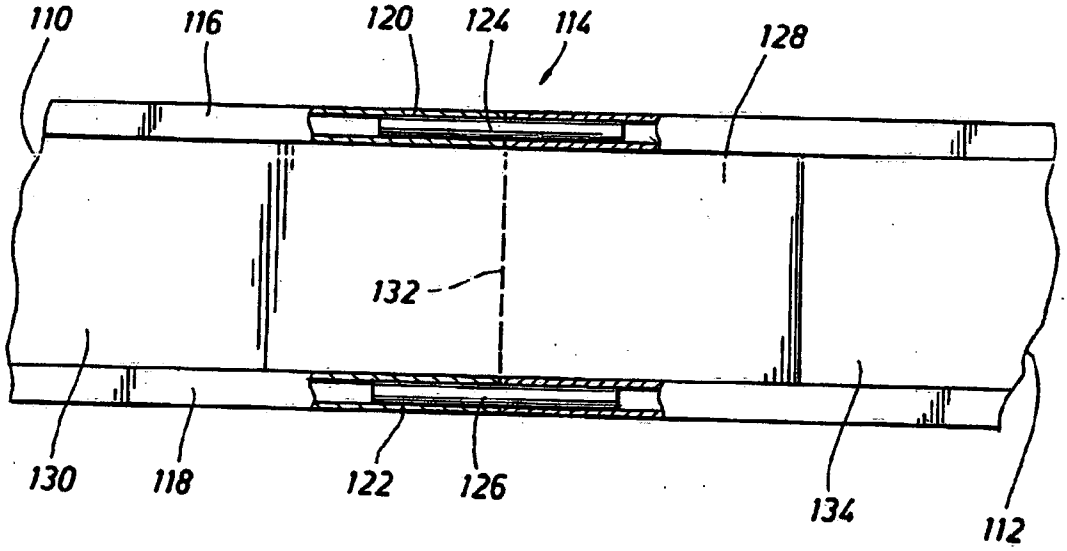
110
116
120
124
114
128
132
130
118
122
126
134
112

AIR CONDITIONING CONDENSATION DRAINAGE SYSTEM

CROSS-REFERENCED TO RELATED PATENT

[0001] The present invention concerns an improvement to the subject matter of U.S. Pat. No. 6,167,717 for "Air Conditioning Condensation Drainage System", which issued to William E. Dudley and C. Ross Dutton on Jan. 2, 2001.

BACKGROUND OF THE INVENTION

[0002] 1. Field of the Invention

[0003] The present invention relates generally to the compromise or deterioration of roofing membrane materials by the condensate from air conditioning systems that are mounted on or above the roofs of commercial buildings that are finished with a roofing membrane that is slightly inclined or contoured, so as to direct water to drain openings in the roof and into drain conduits. More particularly, the present invention concerns the provision of a roof mounted drain system for collecting air conditioning condensate from roof-mounted air-conditioning units and conducting the condensate to a disposal drain and simultaneously isolating the roof membrane from contact by the air conditioning condensate. Even more specifically, the present invention concerns structure and materials for creating a plurality of nondestructive water conducting paths over the surface of a roofing system, that will direct discharged air conditioning condensate from roof mounted air conditioning units to one or more in-roof drains or gutters for disposal and will serve to isolate the roof membrane from the condensate.

[0004] 2. Description of the Prior Art

[0005] Roofing membrane deterioration is typically caused by the presence of persistent air conditioning ("a/c") condensation in localized areas on a roof surface, regardless of the roof surface membrane or construction. It has been determined through tests that a/c condensation moisture is laden with various chemical constituents and heavy metal concentration. Moreover, as water evaporation occurs and a/c condensation continues to be added onto the roofing membrane, the concentration of chemicals and heavy metals will continuously increase thus increasing the detrimental effect of these materials to the roofing membrane. Particularly, a/c condensation fluids attack the roof membrane in areas where it flows and in collection areas where it tends to collect in pools on the roof membrane surface. It has been found that summer heat will actually turn the water flows and pools into boiling water which will literally oxidize the roofing membrane. Extreme cold will freeze these water flows and pools causing fissures in the roof membrane surface. This problem is well documented by the National Roofing Contractors Association, manufacturers of roofing materials, and other roofing industry experts. Present methods of removing the a/c condensation from the roof surface are not effective. The following is a brief description of the most commonly utilized methods for a/c condensation removal from roofing systems.

[0006] PVC or Metal Piping:

[0007] The most common method utilized for the collecting and removal of a/c condensation from a roofing system is to connect a form of piping to the a/c unit and to run the piping from the unit to a suitable point of drainage. Typically, condensate collected in the condensate collection pan of a/c unit will exit the collection pan at a discharge opening and will flow into a drain line through a water trap, also referred to as a "P-trap". The P-trap is a U-shaped conduit section maintaining a water seal between the collection pan and the drain line which functions to isolate air within the drain line from the interior of the a/c unit. Debris and algae will build up or become deposited within the P-trap as well as the drain line and will block the flow of condensate discharge from the collection pan. When a/c condensate drainage piping is utilized, the different types of drainage piping will vary from polyvinyl chloride (PVC) piping, galvanized steel piping, copper piping, and even black iron gas line piping. It has been found with condensate drainage piping that the piping systems quickly become clogged with debris and algae that is present within the drainage system, especially when the a/c unit is situated in a humid environment. It is not unusual for P-traps and drain lines to require service three to four times per year to remove algae and debris blockage Obviously, when a/c drain conduits become clogged to the point that condensate water cannot flow freely there-through, the condensate will build up within the condensate collection pan until it flows into air flow ductwork and then seeks its way into the building. Service personnel are then called on an emergency basis to repair the roof sufficiently prevent leakage of water into the building. At times condensate will build up within the a/c unit until it begins to leak around the edges of the collection pan, in which case it will flow onto the roofing membrane, causing deterioration of the roof membrane as mentioned herein. If the a/c unit structure is partially rusted away adjacent the perimeter of the condensate collection pan, which is often the case, significant leakage of condensate onto the roofing membrane will occur. The condensate will then flow along the roof membrane, following the natural slope of the roof membrane and will develop one or more pools of condensate liquid on the roof surface. This condensate liquid, because it is laden with chemicals and heavy metals as mention above, will begin to degrade the roof membrane. As typically occurs in roofing systems, having condensate drain conduits, because of traffic, age, and constant clogging problems requiring significant maintenance effort and expense, personnel having the responsibility for building maintenance will eventually disconnect the condensate drainage pipes from the air conditioning units. This of course, will cause the a/c condensate to be discharged directly from the collection pan through the drain opening and onto the roof membrane surface. When the drain piping is disconnected in this manner, it is done with the knowledge that deterioration of the roofing membrane by the discharged a/c condensate will eventually result and that, as a consequence, roofing repair will be necessitated in a relatively short period of time. The eventual result is that the disconnected a/c drainage pipes will end up as debris that is present on the roof surface. This disconnected piping debris obviously presents a hazard to workers engaged in roofing maintenance and repair and can be a cause of damage to the roofing membrane.

[0008] Internal Piping:

[0009] While commercial buildings can be provided with internal a/c drain piping systems that extend throughout the building structure to conventional building drain lines, this internal piping method is seldom used because it is expensive and requires frequent maintenance. Internal condensate

drainage piping is a piping system that is connected with the condensate discharge drains of the various a/c units and extends to plumbing drain lines within the confines of the building structure. Debris collected by the condensate of the a/c units will flow along with the condensate into the drain lines and in time will clog the lines. The algae that builds up in all a/c drain lines also causes clogging of the lines. In a relatively short time the drain lines will be sufficiently blocked that flow of condensate drainage will be blocked. This will cause the a/c condensate to enter duct-work and flow into the building structure as mentioned above. These systems are virtually always abandoned due to clogging because the drain lines, being located within the building structure are difficult to access and service or repair.

[0010] Surface Drainage:

[0011] Even though the presence of a/c condensate on a roof membrane is known to cause damage to the roofing system, surface drainage is the method that is most often employed for condensate drainage. Since drainage systems composed of metal or PVC pipe will become clogged and inoperative in a short period of time and are also expensive to install and maintain, it has been found most practical to allow roof surface drainage to occur, knowing that the roofing system will require repair at more frequent intervals. In this case, persistent a/c condensation fluids are allowed to collect in certain areas on the roof membrane surface, causing extensive and accelerated roof membrane deterioration. It is desirable therefore to provide an a/c condensate drainage system for flat roofed building structures which will not be subject to frequent blockage by debris, algae and the like and yet will continuously exclude a/c condensate drainage fluid from the roof membrane surface. It is also desirable to provide flat roofing systems of building structures with a/c condensate drain systems that will efficiently drain a/c condensate fluid along the roof surface to appropriate roof drains for disposal without permitting the a/c condensate to collect on the roof membrane.

[0012] Types of Roofing Systems:

[0013] The following types of roofing systems with roof mounted a/c units are specifically noted as roofing systems that would benefit from installation of an air conditioning condensation drainage system according to the present invention.

[0014] Single Ply Roofing Systems:

[0015] This type of roofing system includes all single ply systems such as ethylene propylene diene monomer or ethylene propylene diene terpolymer (EPDM), polyvinyl chloride (PVC), chlorosulfonated polyethylene (CSPE), also referred to by its registered trademark HYPALON®, thermoplastic olefin (TPO), and/or other types of single ply roofing membranes of chemically or heat welded seam systems.

[0016] Modified Bitumen Roofing Systems:

[0017] Modified bitumen roofing systems include all types of roofing systems that have a styrene butadiene styrene (SBS) or atactic polypropylene (APP) modified bitumen surface layer.

[0018] Built-Up Roofing Systems:

[0019] Built-up roofing (BUR) systems include all types of coal tar and asphalt built-up roofing systems that utilize felts or other fabrics as interply sheets that represent integral components of construction.

[0020] Metal Roofing Systems:

[0021] The term "metal roofing systems" is intended to encompass standing seam metal roofing, corrugated metal roofing and any other metal roofing that is applied in panels and having leakage preventing treatment at any panel joints that exist. The term "metal roofing systems" is also intended to encompass metal roofing installations having a metal roofing membrane and having ridge members which are attached to metal roofing by means of cement, bonding material or the like and which simulate standing seam metal roofing.

[0022] Other Roofing Systems:

[0023] The term "other roofing systems" is intended to encompass all other types of roofing systems that have a smooth surface of material or materials being exposed to weather and which define a roofing membrane that excludes water from the interior of a building structure.

SUMMARY OF THE INVENTION

[0024] It is a principal feature of the present invention to provide a novel a/c condensate drainage system for the roofing systems of buildings which provides for a/c condensate drainage along the contour of the surface of the roofing membrane and yet isolates most of the roofing membrane from continuous exposure to the condensate fluid and the chemical and heavy metal constituents contained therein;

[0025] It is another feature of the present invention to provide a novel a/c condensate drainage system for the roofing systems of buildings which can be provided in the form of one or more strip structures that are intended to be installed directly on the roof membrane surface of a roofing system to provide an open roof mounted surface drainage channel or closed drainage channel to conduct a/c condensate directly from an a/c unit to a roof mounted water drain of the roof structure;

[0026] It is an even further feature of the present invention to provide a novel a/c condensate drainage system for the roofing systems of buildings wherein the drainage system can be constructed of similar or identical roof membrane materials as compared to the roof membrane or can be of integral molded construction so that the surface mounted a/c condensate drainage system will be of sacrificial nature, being replaced as needed to permit the basic underlying roofing membrane to have a normal or conventional service life;

[0027] It is an even feature of the present invention to provide a novel a/c condensate drainage system for the roofing systems of buildings which is designed to capture air conditioning condensate and to channel the condensate along a non-destructive path over the surface of a roofing system and will direct the discharge condensation from roof mounted a/c units into an in-roof drain or gutter that is constructed from any of a number of existing roofing materials such as bitumen, rubber, CSPE, PVC, foam, TPO, asphaltic, HYPALON®, and/or any other common or uncommon materials used in the roofing industry; and

[0028] It is another feature of the present invention to provide a novel a/c condensate drainage system for the roofing systems of buildings which includes the use of

pre-manufactured surface drainage system materials that are designed for installation onto a roof membrane to create a non destructive path over the surface of a roofing system and will direct the discharge condensation from roof mounted a/c units to an in-roof drain or gutter;

[0029] It is another feature of the present invention to provide a novel a/c condensate drainage system having a drain channel structure that is in the form of one or more strips of material which can be cemented, bonded or heat sealed to a conventional roofing membrane and can be molded and adhered to the roofing membrane or molded onto the roofing membrane to define one or more drainage channels for conducting air-conditioning condensate along a roof surface to one or more drains of the roof;

[0030] It is also a feature of the present invention to provide a novel a/c condensate drainage system for the roofing systems of buildings which is of integral construction, being formed in any desired manner, such as by molding or extrusion, including molding or extrusion of materials onto a roofing membrane to define air-conditioning condensate drainage channels or collector basins. The materials may be cured in place on the roofing membrane or bonded or cemented to the primary roofing membrane of a roof to create one or more water drain channels for draining a/c condensate or water from any other source to drain openings or gutters, while protecting the primary roofing membrane from accelerated deterioration by the substantially continuous presence of water, including air-conditioning condensate or its constituents.

[0031] It is another important feature of the present invention to provide a novel method and apparatus for installation of air-conditioning condensate drainage systems onto roof membrane surfaces, which include attachment of drainage channel forming materials to roof surfaces, molding of drainage channel structures directly onto roof surfaces and extrusion of drainage channel configurations from dies directly onto roof surfaces.

[0032] Briefly, the various objects and features of the present invention are realized through the provision of an a/c condensate drainage system having one or more strips of material that are secured in any desirable manner to a roof membrane surface for the purpose of defining a drainage channel along the roof surface for air-conditioning condensate emanating from roof mounted air-conditioning units, an isolation wall or membrane which is applied to a roof membrane surface by heat welding, bonding or by any other suitable means that is common to the roofing industry. This isolation wall or membrane can be a component of an integral or one-piece construction for an air-conditioning condensate drain element will be exposed to the weather and any a/c condensate that is present and will form the bottom surface of a roof mounted drain channel structure for conducting a/c condensate along the roof surface to an appropriate in-roof drain. One of the principal functions of this isolation membrane is to ensure that the a/c condensate does not come into contact with the roofing membrane over which it flows. A pair of lateral ridge structures project upwardly from the outer edge portions of the isolation membrane and are disposed in spaced relation so as to define a condensate channel there between. The lateral ridge structures can be integral with the isolation membrane, such as when integrally formed by a molding or extrusion process, and define spacing containment walls which are of sufficient height to efficiently drain a/c condensate along the drain channel without allowing it to overflow from the condensate drainage channel and spill onto the roof membrane surface. The lateral ridge structures may be composed of multiple layers of any suitable roofing material if desired. Alternatively, the lateral ridge structures may be formed by certain roofing materials such as asphaltic impregnated board, for example, which is fixed to the isolation membrane and which is then overlaid by one or more layers of roofing membrane material so that the condensate drain channel is defined largely by the upper layer of overlying roofing membrane material and the drain channel defined thereby. The a/c drain element, if desired, maybe formed onto the roofing membrane surface by an extrusion process which causes the a/c drain element to firmly adhere or become cemented or bonded to the roof membrane.

[0033] Under circumstances where an isolation membrane of a roofing installation is composed of a material that effectively resists deterioration by the chemical constituents of air-conditioning condensate, air-conditioning condensate drainage channels may be defined on the isolation membrane by adhering strips of ridge material in spaced relation onto the isolation membrane. Preferably these ridge strips will be of generally triangular configuration, having a reasonably large base surface for cementing or bonding to the isolation membrane and with inclined lateral surfaces converging in cross-section to a relatively narrow apex. The ends of the ridge strips, and perhaps the entire ridge strips will define central openings receiving joint alignment dowels that align abutting ends of the ridge strip material. Suitable adhesive or bonding material will typically secure the ends of the ridge strips in aligned abutting assembly. If desired, strips of air-conditioning condensate drainage channel material, having a central membrane and spaced channel forming ridges may have joint configurations that interfit and overlap to ensure against leakage, and the ridges may have end openings defining receptacles for ridge alignment dowels.

[0034] As a further alternative, an a/c drain channel may be formed on a roof membrane or on a drain channel membrane layer covering a roof membrane. In this case, strips of ridge defining material can be heat sealed, cemented, bonded or otherwise secured to the roof membrane or drain channel membrane layer and can be spaced as desired for defining a drain channel of desired width. Strips of ridge defining material of this nature can be applied to the roof membrane or a drain channel membrane in a manner defining one or more collector junctions or receptacles that are arranged to receive a/c condensate from two or more a/c drain channels to minimize the amount of drain channel material that might be required to effectively prepare a roofing system for a/c condensate drainage.

[0035] A polymer foam material may be extruded from an extrusion machine directly onto a roofing membrane and may be formed to a desired air-conditioning condensate drainage channel configuration such as by means of an extrusion die of the machine. Alternatively, the polymer form material emerging from an extrusion machine onto a roofing membrane surface can be rolled or otherwise formed in its uncured state, so as to cure to the desired configuration to define a drainage channel. After curing, an external lining of a suitable protective material may be sprayed onto or

painted onto the polymer form to thus define a durable and impervious external lining for a drainage channel structure.

BRIEF DESCRIPTION OF THE DRAWINGS

[0036] So that the manner in which the above recited features, advantages and objects of the present invention are attained and can be understood in detail, a more particular description of the invention, briefly summarized above, may be had by reference to the preferred embodiment thereof which is illustrated in the appended drawings, which drawings are incorporated as a part hereof.

[0037] It is to be noted however, that the appended drawings illustrate only a typical embodiment of this invention and are therefore not to be considered limiting of its scope, for the invention may admit to other equally effective embodiments.

[0038] In the Drawings:

[0039] **FIG. 1** is an isometric illustration of a part of an integrally constructed product strip representing an a/c condensate drainage system which is constructed in accordance with the principles of the present invention and is shown affixed to the roofing membrane of building structure;

[0040] **FIG. 2** is an isometric illustration of a part of an integrally constructed product strip representing an a/c condensate drainage system which is constructed in accordance with the principles of the present invention and which is molded or extruded onto a roof membrane surface or attached thereto in any suitable manner;

[0041] **FIG. 3** is an isometric illustration of a part of a roofing system and showing two roof mounted air-conditioning units and an air conditioning condensate drainage system which is constructed in accordance with the principles of the present invention and incorporates condensate collector basins having condensate drainage channels leading from the air-conditioning units to a channel drainage collector disposed in feeding relation with another drainage channel;

[0042] **FIG. 4** is an elevational view of a plate-type extrusion die for extruding an air-conditioning condensate drainage strip having the configuration shown in **FIG. 1**;

[0043] **FIG. 5** is an elevational view of a plate-type extrusion die for extruding a pair of spaced air-conditioning condensate drainage strips having the configuration shown in **FIG. 6** and which may be extruded for later attachment to a roof membrane or which may be directly extruded onto a roofing membrane;

[0044] **FIG. 6** is an isometric illustration showing a pair of condensate drainage control strips that may be extruded from the die of **FIG. 5** or might be formed in any other suitable fashion for attachment to a roofing membrane or extruded directly on a roofing membrane;

[0045] **FIG. 7** is an elevational illustration of a striker plate having a configuration for striking off excess extruded or laid foam material to define the spaced ridge element of an air-conditioning condensate drainage channel;

[0046] **FIG. 8** is an isometric illustration of a part of a roof membrane, having affixed thereto two spaced strips of a/c condensate drainage ridge material which is constructed in accordance with the principles of the present invention;

[0047] **FIG. 9** is a sectional view of a ridge strip construction for an air-conditioning condensate drainage channel or catch basin and having an internal structural wall and showing a joint alignment dowel member located within an opening defined in part by the internal structural wall;

[0048] **FIG. 10** is a sectional view of a ridge strip construction for an air-conditioning condensate drainage channel or catch basin and having an internal passage or opening having a joint alignment dowel member located therein for strip alignment at joints;

[0049] **FIG. 11** is a sectional view of a ridge strip element being similar to that of **FIG. 9** and being adapted for condensate drainage channel or catch basin construction on roofing installations;

[0050] **FIG. 12** is an isometric illustration showing a roof structure having an air-conditioning unit mounted thereon and showing a air-conditioning condensate drainage channel being defined by spaced ridge elements applied directly to the roof membrane or to a roof mounted panel defining a portion of a drain channel; and

[0051] **FIG. 13** is a plan view of joined strips of air-conditioning condensate drainage channel material, with parts thereof broken away and shown in section and illustrating dowelled interconnection and overlapping panel sections for joint integrity and joint leakage prevention.

DETAILED DESCRIPTION OF PREFERRED EMBODIMENT

[0052] Referring now to the drawings and first to **FIG. 1**, an air-conditioning condensate drainage system constructed in accordance with the principles of the present invention and representing the preferred embodiment is shown generally at **10** and is shown in the figure as a partial strip of condensate drain structure which is shown to be mounted in any suitable fashion onto the roofing membrane **12** of a building roofing system. The air-conditioning condensate drainage system **10** comprises an isolation membrane **14** which is typically in the form of an elongate strip of material that is compatible with the membrane material of the roofing membrane **12**. Preferably, the isolation membrane will be a component of an integral construction composed of a polymer material such as polyvinyl chloride (PVC) which may be layered with other suitable materials and may be reinforced by a suitable fabric to enhance the structural integrity thereof. The integral condensate drainage strip material **11** may be manufactured by an extrusion process either being a pre-manufactured strip component for attachment to a roofing membrane surface or, in the alternative, may be composed of a syntactic foam material which is extruded or molded directly onto the roofing membrane. The isolation membrane **14** may be constructed of identical or similar material as compared with the roofing membrane and will be affixed to the upper surface of the roofing membrane **12** by heat welding, bonding, by suitable roofing adhesive or by any other installation method or materials as is common to the roofing industry. The isolation membrane typically serves as the bottom membrane layer or one of the bottom layers of the a/c condensate drainage strip or strips and functions to isolate the roofing membrane **12** from contact by a/c condensate and the chemicals and heavy metals present therein and also functions to define the bottom wall structure of a drainage channel for conducting a/c conden-

sate from the condensate discharge of an a/c unit to a suitable drain in the roofing structure. From the isolation membrane projects at least a pair of spaced ridge defining elements **16** and **18** which are preferably integral with the isolation membrane or web **14**. Additionally, the strip material **11** and its spaced ridge defining elements **16** and **18** may be composed of a heat weldable polymer material such as PVC which is heat welded to the roof membrane **12** and thus is a permanent integral component of the air-conditioning condensate drainage system. The spaced ridge defining elements are typically oriented in substantially parallel relation so as to define a condensate drain channel **20** therebetween. It should be borne in mind however, that the spaced ridge elements **16** and **18** may be oriented in angular relation to one another or oriented in any other suitable relation to define a drainage channel of desired configuration and dimension. For example, as is evident from **FIG. 3** hereof, the spaced ridge defining elements and the resulting ridges defined thereby can be oriented in diverging relation so as to define a catch basin **22** or **23** for collecting condensate being discharged by the condensate drain openings **24** of one or more a/c units, such as is shown at **26** and **27**. Typically, a catch basin **22** or **23** will be provided in the form of a pre-manufactured connector structure **23** which is affixed to the roofing membrane and is also affixed in suitable manner to a strip **11** of pre-manufactured condensate drain assembly. Alternatively, a catch basin structure **22** or **23** can be constructed in place on the roofing membrane so that its configuration can be suited to the a/c drain and the roof structure of the building. For conservation of materials, as shown in **FIG. 3**, condensate drain channels leading from air-conditioning units may conduct condensate to a collector basin structure shown generally at **24** which is preferably of generally triangular configuration, being defined by a collector membrane **25** having edge ridges **26**. The installed or pre-manufactured collector basin structure **24** may be of any suitable configuration and may be used for connection of drain channels, for defining catch basins, for connecting drain channels with roof mounted drain fittings, etc, without departing from the spirit and scope of the present invention. It should also be borne in mind that the spaced ridge defining elements **16** and **18** of the condensate drainage strips or the ridges **26** of the collector basins may be of any suitable dimension or configuration that may be considered appropriate for defining spaced ridges having a drain channel or basin therebetween. The spaced ridge defining elements may be of substantially triangular or rhomboid cross-sectional configuration as shown in **FIG. 1**, of oval or curved cross-sectional configuration as shown in **FIG. 2** if desired. In fact, the ridge defining elements may be of any configuration or dimension for defining spaced ridges projecting a suitable height above the isolation membrane or roof membrane surface to ensure that the maximum expected volume of a/c condensate and rain water or snow melt flow will be accommodated by the cross-sectional dimension and volumetric capacity of the drain channel. Additionally, since the roofing membranes of most commercial buildings are typically slightly sloped to enable surface drainage of the water resulting from rain, melting snow or ice to the in-roof surface drains of the roofing system, the spaced ridges of the condensate drain structure must be of sufficient height to compensate for the slight slope of the roofing membrane and yet provide for adequate containment of the a/c condensate that is intended to be acquired and controlled as it is conducted to a suitable in-roof drain for ultimate disposal. As an example, it should be noted that the ridge defining elements **16** and **18** may be of differing height if desired so that one drain channel ridge will have greater height than the other. This will allow the air-conditioning condensate drainage system to be mounted to a slightly sloping roof membrane in a manner accommodating its slope, and yet ensuring that the a/c condensate is adequately contained and is not permitted to spill over a ridge and onto the roofing membrane surface.

[0053] The embodiment shown generally at **30** in **FIG. 2** may be of molded or extruded construction and defines a substantially planar bottom surface **32** for contact with a roofing membrane surface. A pair of spaced contoured side ridges **34** and **36** are preferably formed integrally with the isolation membrane **38** thereof and define ridges having a curved or contoured upper surface as shown at **35** and **37**. The integral strip material of the embodiment **30** of **FIG. 2** may be formed by an extrusion or molding process for later attachment as a pre-manufactured strip to the roofing membrane of a roofing installation. In the alternative, if desired, the integral strip of material of the embodiment may be extruded directly onto the roofing membrane, with the material thereof being bonded or adhered to the roofing membrane surface.

[0054] Referring now to **FIGS. 4 and 5** of the drawings, extrusion dies are shown for extruding one of more strips of material either to form a pre-manufactured strip material for placement on the roof membrane of a roofing system or to extrude the strip material directly on the roof membrane surface. In the case of **FIG. 4**, an extrusion die shown generally at **40** is in the form of a die plate **42** having a single die opening **44** of the configuration for forming the condensate channel strip material of **FIG. 1**. In the case of **FIG. 5**, an extrusion die is shown generally at **46** which is in the form of a plate-like die **48** having a pair of extrusion openings **50** and **52** through which ridge strips, such as are shown at **54** and **56** in **FIG. 6** may be extruded. The extrusion openings **50** and **52** are spaced properly to define a condensate drain channel **58** of desired volumetric capacity therebetween. As shown in **FIG. 6**, the ridge strips **54** and **56** may be heat sealed, cemented or bonded to a conventional roof membrane **60** or may be extruded directly onto the roof membrane such as by a channel forming extrusion machine that is moved along the roof membrane during installation of the ridge strips. If desired, the extruded ridge strips may be coated with a protective material that resists damage by ultraviolet rays. Also, if desired, the channel ridge strips may be formed from a plurality of materials or a plurality of layers of material, such as conventional roofing materials, and adhered to the roof membrane by heat sealing, cementing, bonding or by any other suitable means of attachment.

[0055] The strip material forming the air-conditioning condensate drain strip or strips can be supplied in rolls so that rolls of extended length can be shipped to end users. In the alternative, the air-conditioning condensate drainage strip material can be cut into strips of suitable length, i.e., ten foot lengths, twenty foot lengths, etc. and can then be packaged for shipment to wholesalers, retailers or end users.

[0056] It should also be born in mind that the drain structure shown in FIGS. **1-6** may also be installed by

constructing them directly on the roof structure through the use of any suitable construction procedure and materials that are appropriate to the roofing industry.

[0057] As shown in FIG. 7, extruded or laid foam material in its uncured state may be formed to desired configuration by a striker plate 62 having openings 64 and 66 that form the uncured foam material to define spaced ridges, with edge 68 defining a flat surface configuration during striking of the foam material. After the material has been formed and cured a coating of UV protective material may be applied to the cured foam substrate in any desirable manner.

[0058] As a further example, the air-conditioning condensate drainage system of FIGS. 1-3 can be installed in place on the roof membrane of a roofing system according to the following procedure: The isolation membrane 12 can be installed directly onto the roof membrane and suitably oriented to accommodate the slope of the roof membrane. The ridge defining structures of the strip material may then be placed in suitably spaced relation on the isolation membrane or directly on the roof membrane, so that the roof membrane becomes a portion of the condensate drain channel structure. The height of the ridge defining structures should be sufficient to accommodate unusually low areas of the roofing installation that occur due to roofing tolerances.

[0059] FIGS. 1, 2 and 6 illustrate a/c condensate drainage strip materials of monolithic or integral construction and which may be formed by extrusion, molding or fabrication. These strip profiles maybe composed of polymer foam material PVC, Modified bitumens, Hypalons, CSPE, EPDM, and/or other suitable materials that are suitable for condensate drainage channels on roofing systems. In each case the profiles define spaced ridges and a bottom wall to confine a/c condensate and typically prevent its contact with the roof membrane to which the a/c condensate drainage system is affixed. If desired, however, ridge strips may be applied in any suitable manner to a roof membrane surface so as to use the membrane surface between the strips to form portions of the drain channels. The strip materials may be composed of any of a number of commercially available expandable foam materials which may be formed in place or may be pre-manufactured and then affixed to a roofing membrane by cementing, bonding or by any other suitable means. The condensate drainage strip material may be composed of any of a number of suitable materials having the capability for resisting damage in the presence of the heavy metal and chemical constituents of air-conditioning condensate.

[0060] The isometric illustration of FIG. 8 shows an air-conditioning condensate drainage installation shown generally at 70, having a central membrane 72 that may be the uppermost membrane of a roofing installation or may be an isolation membrane of the general nature shown at 14 in FIG. 1. Pre-manufactured ridge strips 74 and 76 are installed onto the membrane 72 in any suitable manner. The ridge strips 74 and 76 are each of the general configuration that is shown in FIG. 9 and having a wide base wall 78 for attachment to the membrane and tapered side walls 80 and 82 extending in upwardly converging relation from the base wall. A generally flat top wall 84 is integral with the side walls. Within the hollow interior of the ridge strip is located a structural wall 86 that is shown to be of curved configuration and defines structural wall edges 87 and 89 that are either joined with the base wall 78 or with the side walls 80 and 82 or both. The structural wall 86 provides the hollow ridge strip with enhanced structural integrity and prevents its collapse. It should be borne in mind that the internal structural wall 86 may have a configuration other than the curved configuration that is shown. The curvature of the structural wall 86 and its relation with the base wall 78 defines an internal passage region 88 that permits the location of a dowel 90 within the internal passage. A dowel would be used at abutting joints of the ridge strip material to align the abutting strip ends, to facilitate connection of the ends of abutting strips and to provide the strip ends and the resulting joint with enhanced structural integrity. The dowel will extend into the passages of abutting ridge strips and permit the abutting ends of the ridge strips to be joined by cement or bonding material or to be heat welded or otherwise secured.

[0061] Another ridge strip embodiment is shown in FIG. 10 and comprises a strip body 92 of generally triangular configuration, which defines a rather wide or broad base surface 94 that is adapted for being cemented, bonded or heat welded to a roof membrane or a drainage channel membrane. The ridge strip 92 defines inclined, upwardly converging side surfaces 93 and 95 which merge with a ridge top surface 97 which can be of arcuate cross-sectional configuration as shown or may be of substantially planar configuration, essentially as shown in FIG. 9. The ridge strip may be composed of any suitable polymer material or any of a number of acceptable roofing materials, such as indicated above. The ridge strip 92 defines a central passage 96 which receives a dowel member 98 in the same general manner as described in connection with FIG. 9. The dowel bridges the joint of abutting ridge strips, maintains alignment of the abutting ends of the ridge strips and enhances the capability of the ridge strips to be attached to one another to form a secure joint. The strip body structure may also be designed with opposed lateral rib elements 99 and 101 which provide a strengthening function for the strip as well as establishing an aesthetic appearance of the strip, when it is installed on a roofing membrane or on an isolation membrane to define a condensate drain channel.

[0062] In some cases the tolerances of roofing installations cause the slope of the roofing membrane to be uneven so that a roof surface condition exists that causes water "pooling" on the roofing membrane. When these pooling areas of a roof are traversed by the condensate drainage strips or panels of the present invention, water pooling within a drainage channel can occur. It is appropriate in such case, therefore, to provide condensate drainage channel installations having drainage channel ridges of greater height so that pooling condensate will not overflow the drainage channels and spill onto the roofing membrane of the roofing installation. As shown in FIG. 11, a ridge strip shown generally at 75 is of extruded construction, having base flanges 77 and 79 to enable the ridge strip to be affixed to any suitable surface. As shown, the base flanges 77 and 79 may be cemented, heat welded or bonded to a substrate 81, which may be the bottom panel of a drainage channel strip or a section of a roofing membrane. Angulated side walls 83 and 85 are integral with the base flanges and extend upwardly therefrom and are disposed in upwardly converging relation with one another. The angulated side walls 83 and 85 merge smoothly with a curved upper wall structure 87 having an upwardly facing convex surface. The base flanges, angulated side walls and the curved upper wall structure cooperatively

define an internal space **89**. An intermediate structural wall **91** is located intermediate the internal space **89** and is arranged with its opposite side edges **93** and **95** integrally connected intermediate the upper and lower edges of the respective angulated sidewalls. The intermediate structural wall **91** is of curved configuration and is oriented with its convex surface facing upwardly. This curved configuration of the intermediate structural wall **91** provides the ridge strip with considerable structural integrity and permits it to be of substantial height, to contain condensate as well as rainwater, snow melt, etc. on roofing areas that are subject to pooling. For example, the height of the curved upper wall **87** above the substrate **81** can be in the order of one inch or greater, if desired, and yet the ridge strip will have excellent characteristics of structural integrity. The ridge strip construction may be composed of any of a number of polymer materials, conventional roofing materials as desired, without departing from the spirit and scope of the present invention.

[0063] As shown in **FIG. 12**, the ridge strip material of FIGS. **8-10** can be used to define air-conditioning condensate drainage channels extending from a roof mounted air-conditioning unit **100** to a roof drain opening **102**. The ridge strip material can be arranged to define a catch basin **104** which receives all leaked condensate from the air-conditioning unit. The ridge strip material can be attached to the roof membrane **106** so as to define a drain channel **108**, with the spaced ridges confining the condensate to the drain channel and ensuring that no lateral leakage occurs as the condensate is conducted to the drain opening of the roof.

[0064] As shown in **FIG. 13**, pre-manufactured condensate drain channel strips shown at **110** and **112** can be constructed so as to establish an interfitting joint shown generally at **114**. In this case, the pre-manufactured drain channel strips each have side ridge elements **116** and **118** that are of tubular configuration or define dowel receptacles **120** and **122** at the ends, receiving dowel members **124** and **126**. The dowel members achieve alignment of the ends of the ridge members, enhance the structural integrity of the ridge members at the joint and simplify the attachment of the abutting ridge members. A portion **128** of the central panel **130** of the strip material **110** extends beyond the ends of the ridge members and overlaps the end **132** of the opposite air-conditioning condensate drainage strip **112**. The panel portion **128** is fixed to the central panel **134** of the strip material **112**, such as by cementing, bonding, heat sealing or the like and prevents leakage of the central panels at the joint **114**.

[0065] In view of the foregoing it is evident that the present invention is one well adapted to attain all of the objects and features hereinabove set forth, together with other objects and features which are inherent in the apparatus disclosed herein.

[0066] As will be readily apparent to those skilled in the art, the present invention may easily be produced in other specific forms without departing from its spirit or essential characteristics. The present embodiment is, therefore, to be considered as merely illustrative and not restrictive, the scope of the invention being indicated by the claims rather than the foregoing description, and all changes which come within the meaning and range of equivalence of the claims are therefore intended to be embraced therein.

We claim:

1. An air-conditioning condensate drainage system for the roof structure of buildings, comprising:

an elongate strip of material having an isolation membrane defining a bottom surface for assembly to a roof membrane and having an upper surface; and

a pair of ridges being integral with said elongate strip of material and being disposed in spaced relation with one another and cooperating with said isolation membrane to define an air-conditioning condensate drainage channel between said ridges.

2. The air-conditioning condensate drainage system of claim 1, comprising:

said pair of ridges each having a curved cross-sectional surface configuration.

3. The air-conditioning condensate drainage system of claim 1, comprising:

said pair of ridges each having a generally triangular cross-sectional surface configuration.

4. The air-conditioning condensate drainage system of claim 1? comprising:

said pair of ridges being disposed in angular relation with one another and defining a condensate collection basin therebetween; and

a plurality of condensate drain channels being in condensate feeding communication with said condensate collection basin.

5. An air-conditioning condensate drainage system for the roof structure of buildings, comprising:

a roof membrane defining a portion of a roofing system; and

a pair of spaced ridge elements being fixed to said roof membrane and being disposed in spaced relation with one another and defining an air-conditioning condensate drainage channel therebetween.

6. A method for manufacturing an air-conditioning condensate drainage system for the roof structure of buildings, comprising:

placing at least one elongate drain channel strip onto a roof membrane, said elongate drain channel strip being of integral construction and having an isolation membrane and having a pair of spaced ridge elements being integral therewith and defining an air-conditioning condensate drainage channel therebetween; and

fixing said elongate drain channel strip to said roof membrane.

7. The method of claim 6, comprising:

said fixing step being heat welding said elongate drain channel strip to said roof membrane; and

during said heat welding step, applying mechanical pressure to said elongate drain channel strip for enhancing said heat welding thereof to said roof membrane.

8. The method of claim 6, comprising:

said fixing step being forming said elongate drain channel strip directly on and in heat welded relation with said roof membrane.

9. The method of claim 8, comprising:

during said fixing step, extruding said elongate drain channel strip from an extrusion die directly on and in heat welded relation with said roof membrane.

10. The method of claim 6, comprising:

forming a pair of ridge strips on a roof membrane; and

heat welding said pair of ridge strips to said roof membrane.

11. The method of claim 10, comprising:

applying mechanical pressure to said pair of ridge strips for enhancing heat welding thereof to said roof membrane.

12. A method for installing an air-conditioning condensate drainage system on the roof structure of a building having one or more air-conditioning units, wherein the roof structure includes a roof membrane, said method comprising:

affixing a condensate collection basin to said roof membrane, said condensate collection basin having in isolation membrane and perimeter ridges of sufficient height to define a collection basin of sufficient volume to accommodate the condensate drainage from a plurality of air-conditioning units;

affixing elongate strips of condensate drain material to the roof membrane along a desired drainage path from a plurality of air-conditioning units to said condensate collection basin, said condensate drain material defining a pair of spaced ridges defining a drainage path therebetween; and

affixing an elongate strip of condensate drain material to the roof membrane along a desired drainage path from said condensate collection basin to an in-roof drain of the roof structure.

13. The method of claim 12, comprising:

said affixing said elongate strip of condensate drain material and said condensate collection basin to the roof membrane of the roof structure being heat welding.

14. The method of claim 13, comprising:

said affixing said elongate strip of condensate drain material and said condensate collection basin to the roof membrane including application of mechanical pressure to said elongate strip of condensate drain material and said condensate collection basin during heat welding thereof.

15. A method for manufacturing an air-conditioning condensate drainage system for application to a roof membrane of a roof structure of buildings, comprising:

positioning at least one elongate condensate drain strip on a roof membrane, said elongate condensate drain strip having a pair of spaced integral ridge elements thereon and defining a condensate drain channel therebetween; and

fixing said at least one elongate condensate drain strip to said roof membrane.

16. A method for installing an air-conditioning condensate drainage system for application to a roof membrane of a roof structure of buildings, comprising:

mixing a quantity of polymer foam material;

applying said polymer foam material to a roofing membrane; and

forming said polymer foam material to define an air-conditioning drain channel having spaced ridge members and defining a liquid drain channel between said spaced ridge members.

17. The method of claim 16, comprising:

after curing of said polymer foam material, applying a coating of protective material to said air-conditioning drain channel.

18. The method of claim 16, wherein said step of applying said polymer foam material to said roofing membrane comprising:

extruding said polymer foam material through a die plate having at least one die opening of a configuration defining at least a portion of said air-conditioning drain channel; and

depositing the extruded polymer foam material onto said roofing membrane.

19. The method of claim 16, wherein said step of applying said polymer foam material to said roofing membrane comprising:

depositing said polymer foam material onto said roofing membrane;

with said polymer foam material in its uncured state, forming said polymer foam material to a desired configuration to define an air-conditioning condensate drain channel structure; and

after said forming of said polymer foam material, permitting curing of said of said polymer foam material on said roofing membrane.

20. The method of claim 19, comprising:

said forming of said polymer foam material being extrusion of said polymer foam material through a die plate onto said roofing membrane.

21. The method of claim 19, comprising:

said forming of said polymer foam material being moving a striker plate along said polymer foam material, said striker plate being configured to conform said polymer foam material to desired configuration for defining an air-conditioning condensate drain channel structure.

22. An air-conditioning condensate drain channel structure, comprising:

at least one strip of material having a mounting base surface;

at least one elongate ridge member projecting upwardly from said mounting base surface;

and having upwardly converging side surfaces and an upper surface intersecting said side surfaces.

23. The air-conditioning condensate drain channel structure of claim 22, comprising:

said at least one strip of material being substantially solid and having a generally triangular cross-sectional configuration, having opposed angulated side surfaces extending upwardly from said base surface and being disposed in upwardly converging relation and merging with a ridge top surface.

24. The air-conditioning condensate drain channel structure of claim 22, comprising:

said at least one strip of material being of hollow construction defining an interior space and having a base wall and angulated side walls projecting upwardly from said base wall and being disposed in upwardly converging relation with one another, said at least one strip of material having a strip top wall being integral with each of said side walls; and

an intermediate structural wall being located within said interior space and having spaced bottom edges being in integral connection with at least said base wall, said intermediate structural wall providing said at least one strip of material with enhanced structural integrity.

25. The air-conditioning condensate drain channel structure of claim 24, comprising:

a dowel receptacle being defined between said intermediate structural wall and said base wall for receiving a dowel at a joint between abutting ridge strips for alignment of ridge strip ends for facilitating connection of abutting ridge strip ends and for enhancing the structural integrity of abutting connected ridge strips.

26. The air-conditioning condensate drain channel structure of claim 22, comprising:

said at least one strip of material being a pair of strips of material each defining at least one elongate ridge; and

said pair of elongate strips of material being mounted to a roofing membrane and disposed in spaced relation to define an air-conditioning condensate drain channel therebetween.

27. The air-conditioning condensate drain channel structure of claim 22, comprising:

said at least one strip of material having a central panel defining side edges and defining a pair of elongate ridge members each being located at a respective one of said side edges and defining an air-conditioning condensate drain channel therebetween; and

said at least one strip of material being adapted for mounted to a roofing membrane.

28. The air-conditioning condensate drain channel structure of claim 27, comprising:

said elongate ridges having ends defining dowel receptacles;

dowel elements being received with dowel receptacles of abutting elongate ridges for alignment of said ends of abutting ridges, for facilitating connection of said ends of abutting ridges and for enhancing the structural integrity of a joint defined by said ends of abutting ridges.

29. The air-conditioning condensate drain channel structure of claim 28, comprising:

a second strip of material being adapted for end to end connection with said at least one strip of material and having an extended central panel section being disposed for overlapping relation with a portion of said central panel of said at least one strip of material to prevent leakage at said joint.

30. An air-conditioning condensate drain channel strip comprising:

a drain channel ridge element having upwardly converging angulated side walls and an upper wall defining an internal ridge space;

at least one base flange being integrally connected with at least one of said angulated side walls and adapting said drain channel strip for mounting to a roofing substrate; and

an intermediate internal wall having side edges integrally connected with said angulated side walls and enhancing the structural integrity of said drain channel ridge element.

31. The air-conditioning condensate drain channel strip of claim 30, comprising:

said upper wall being elongate and being of curved configuration and having a convex surface facing upwardly; and

said intermediate internal wall being of curved configuration and having a convex surface facing upwardly.

32. The air-conditioning condensate drain channel strip of claim 30, comprising:

each of said upwardly converging angulated side walls having bottom edges; and

said at least one base flange being a pair of generally flat flange elements each projecting laterally and outwardly from respective bottom edges of said upwardly converging angulated side walls

* * * * *

ATTACHMENT 17

Real World Corrosion Monitoring - Inside The Pipe

CORRVIEW

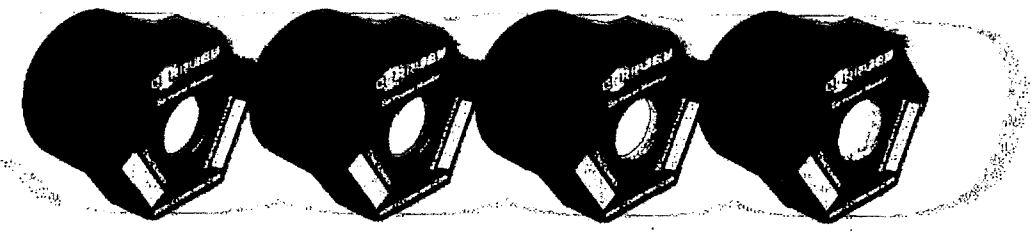

Technical Bulletin M-7

CHROMATE REMOVAL IN CLOSED HVAC RECIRCULATING SYSTEMS

The use of hexavalent chromium as a corrosion inhibitor of HVAC cooling and heating systems was finally prohibited for cooling tower use in New York City in January 1990, and elsewhere in the U.S. over some years prior.

For decades, chromate was the overwhelming treatment chemical of choice - providing low corrosion rates typically around 1 mil per year (MPY) for even open cooling tower systems, and controlling microbiological growths through its own inherent toxicity. Building and plant engineers relied solely upon the use of chromate based chemical additives to provide the required corrosion protection of steel piping systems. With even the most inferior application methods, often nothing more than an unmeasured scoop of chromate powder dumped into the cooling tower sump at irregular intervals, corrosion rates could often be maintained at or below 1 MPY.

Although its use in boilers and open cooling tower systems was almost totally banned, continued use in closed systems was permitted under stringent regulatory conditions - an option many building owners and plant operators have taken advantage of given the proven superior corrosion control provided by hexavalent chromate.

DRAINING REMAINS A PROBLEM

Removing hexavalent chromate from a closed circulating system prior to maintenance, drain down, or a change in chemical treatment program presents enormous problems since it is illegal to discharge chromate treated water into sewers, streams, rivers, or ground surfaces anywhere in the United States. State and federal regulations are quite strict.

Up until now, the only legal solution for those having older circulating systems treated with chromate has been to repeatedly drain and flush the entire volume into 55 gallon drums, and dispose of them as a hazardous waste in a sanitary landfill or through incineration - all at extraordinary cost.

Rather than remove thousands of gallons of chromate treated water and pay for the disposal of tens of thousands of pounds of hazardous waste material, it is possible to selectively filter the hexavalent chromate from any vessel or piping system.

SELECTIVE CHROMATE REMOVAL

Through a special procedure, the hexavalent chromate is adsorbed onto various specialty resin or ion exchange compounds - thereby reducing any toxic waste disposal problem ten thousand fold or more. In most cases, the problem can be reduced to the weight of just little more than the original chemical content itself.

At a typical concentration of 1,000 PPM for a closed system treated with hexavalent chromate, the actual amount of chemical is still only one tenth of one percent of the volume of the water - or 1/1,000 the weight of the water. A 5,000 gallon closed system, for example, would require the disposal of approximately 42,250 lbs. of chromate treated water on just the first draining - multiple drainings would be required to reduce the final chromate level to acceptable limits. Again for this example, 91 drums, 55 gallons each, would need to be filled and carted away just on the first drain down. As many as 300 drums might be ultimately required.

However, only about 42 lbs. of hexavalent chromate actually exists as the source of the problem, and can be slelectively removed by perhaps a few dozen ion exchange cartridges. This reduces the hazardardous waste problem dramatically - thereby also reducing handling and disposal costs. In addition, relatively few pounds of hazardous waste will not likely title a building or plant facility as a hazardous waste point source.

STEP BY STEP PROCEDURE

Preliminary testing of the water to identify its chemical characteristics and an estimate of the overall contaminant problem is recommended - since other factors, some of them hidden or unknown, can influence chromate removal efficiency.

This simple and inexpensive filtration system can be easily installed, setup and maintained by building personnel. Depending upon the volume of the system, the concentration of chromate to be removed, and the removal capacity of the particular type of filtering system selected, the chemical content can be reduced in as little time as a few days to a few months.

The chromate removal system typically consists of a series of five cartridge elements; each having the purpose of removing a specific component part of the chemical contaminant. Cartridges are individually housed to allow changing only those elements which have reached their maximum capacity - thereby reducing the cost of unnecessarily replacing partially used elements. For larger systems, refillable housing containing significantly more chromate removal resin can be used instead of the individual cartridges.

TOTAL REMOVAL

A flowmeter is incorporated into the piping layout in order to ensure the most effective chromate removal by maintaining the required retention time through the filtering media. When operated under design parameters, this chemical removal system will reduce chromate levels from 1,000 PPM or more to 0 PPM - thereby fulfilling all federal and/or state discharge requirements.

This chemical specific filtering system may be installed on a once through pass to a drain in order to satisfy a maximum allowed chemical discharge limit. Another option is to install it across one or more circulating pumps whereby the clear filtered water is returned to the system. After full completion of the chemical removal process, it is necessary to only dispose of the used cartridges by following recommended hazardous material procedures. Since the chromate is adsorbed onto resins which are contained within *"sealed"* plastic filter cartridges typically, worker exposure and site contamination is minimized.

Given knowledge of the total system volume, flow rate, contaminant concentration, and rate of cleaned fluid returned to the system, it is possible to calculate an estimate of the time required to clean any piping system down to any level of removal.

SIMPLE INSTALLATION

The below schematic flow diagram illustrates the basic mechanism for setting up an effective chromate removal system as described above. Other variations exist. Critically important is the need to prefilter the liquid using a fine 1-5 micron sediment cartridge in order to protect the microfine pores on the ion exchange resin from clogging - thereby limiting their removal capacity.

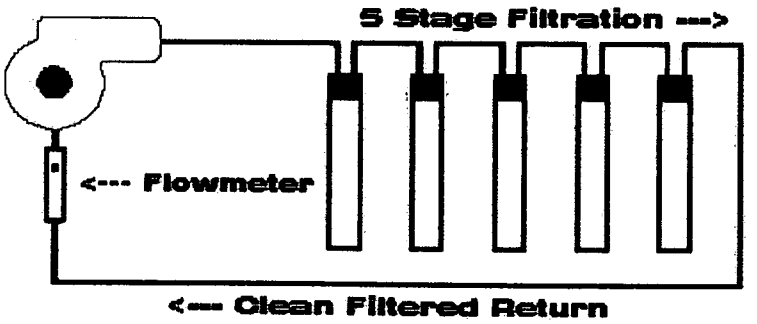

ATTACHMENT 18

RERE-JM

CLINTON BOGERT ASSOCIATES

CONSULTING ENGINEERS

JOB NO.

PROJECT

DATE 6-13-77

SUBJECT

SHEET 1 OF 4

DETAIL LIST OF MANUFACTURING INDUSTRY IN JM COMPUTED BY SZS CHECKED BY

INDUSTRY NUMBER	NAME OF INDUSTRY	ADDRESS	
CARLSTADT.			
03001	A & M Electroplating.	443 Garden Street.	Carlstadt.
03002	Acrison, Inc.	180 Broad Street	Carlstadt.
03011	Aluminum Anodizing.	500 13th Street.	Carlstadt.
03015	Arsynco, Inc.	FT. 13th Street,	Carlstadt.
03020	Backus Machine WKS	520 11th Street,	Carlstadt.
03022	Bergen Iron & Engineering	755 HWY 17	Carlstadt.
03026	Brevel Motors Corp.	Broad & 16th Street	Carlstadt.
03028	Bloomfield Drapery Co.	410 Hackensack Street,	Carlstadt.
03043	Diamond Shamrock Chem.	Berry Ave. At Route 17	Carlstadt.
03052	Glow Plastic Corp.	45 Broad Street,	Carlstadt.
03061	Hoole Machine & Eng.	334, 12th Street.	Carlstadt.
03064	J Chas Embroidery.	545 2nd Street.	Carlstadt.
03065	Jomac Inc.	181 Broad Street	Carlstadt.
03074	Lincoln Dress Co.	433 Lincoln Street	Carlstadt
03077	Maguth & Son Machine	508 Jefferson Street	Carlstadt.
03083	Morton Castings Inc.	333 16th Street,	Carlstadt.
03085	Natale Mach & Tool.	339 13th Street,	Carlstadt.
03092	Perma-Flex Rollers	711 State HWY 17	Carlstadt.
03109	Randolph Products.	12th Street.	Carlstadt.
03110	Record Electroplating	595 Broad Street	Carlstadt.
03116	Sedivor Inc.	320, 13th Street	Carlstadt.
03117	Smith & Nichols	610 Central Ave	Carlstadt.
03119	Stanbec Co Inc.	70 Broad Street	Carlstadt.
03121	Spear Packing Inc.	20th & Broad St.	Carlstadt.
03122	Town Offset	75 Broad Street.	Carlstadt.
03124	Sun Chemical	631 Central Ave.	Carlstadt.
03126	I P Smith	325 14th Street	Carlstadt.
03134	Tel-Instrument Co.	728 Garden Street	Carlstadt.
03137	Eagle Button Co.	415 14th Street.	Carlstadt.
03161	Catalyst Dev. Corp.	35 Broad Street	Carlstadt.
03270	Idl Mfg. & Sales.	730 Garden Street	Carlstadt.
03283	Ganes Chemical Co.	326 Garden Street	Carlstadt.
03284	Albert Frei Emb.	533 First Street	Carlstadt.
03285	Cosan Chemical Corp	426, 13th Street	Carlstadt.
03288	Reliable Casket Co.	313 10th Street	Carlstadt.
03296	RJR Archer	631 Central Ave.	Carlstadt.
03298	US Post Office.	Broad & 2nd. St.	Carlstadt.
03019	BSAF Wyandotte	Broad & 14th St.	Carlstadt

CLINTON BOGERT ASSOCIATES

CONSULTING ENGINEERS

JOB NO.

PROJECT

DATE 7-13-1977

SUBJECT

SHEET 2 OF 4

DETAIL List of Manufacturing Industry. COMPUTED BY SZS CHECKED BY

INDUSTRY NUMBER	NAME OF INDUSTRY	ADDRESS.		
RUTHERFORD.				
38002	Atlas Machine & Tool Corp.	255	Highland cross	Rutherford
38006	Electrol Burner Man Co	22	union Ave.	Rutherford.
38010	Howmedica Inc.	359	Veterans Blvd.	Rutherford.
38011	Humphrey Pharmacal	63	Meadow Road	Rutherford
38013	Lafayetta Gen Machine WKS	27	Glen Road	Rutherford.
38015	Dara Dress	13	union Ave	Rutherford.
38020	Rutherford Forge Inc.	25	Borough Street	Rutherford
38021	Rutherford Dress Co.	28	Glen Road	Rutherford
38024	Singleton Machine & Tool	49	Meadow Road,	Rutherford
38027	Times Press Inc.	30	Franklin Place	Rutherford
38028	Trisse, Inc.	309	Veterans Blvd.	Rutherford
38029	Westmount Tool Corp	225	Highland cross	Rutherford
38031	PSEG	184	Park Ave	Rutherford.
38032	American Thread	350	Industrial DR.	Rutherford.
38033	Jory Engravers	23	W Erie Ave.	Rutherford
38035	Fashion Footwear Co.	290	Veterans Blvd.	Rutherford
38036	Varrelman's Bakery	60	Park Ave.	Rutherford
38037	Montage	9	Industrial Dr.	Rutherford
38038	Royal Kitchens, Inc.	231	State Hwy 17	Rutherford
38039	Dairy Queen.	234	Park Ave	Rutherford.
38040	Geo Hillman Co.	285	Highland cross	Rutherford.
38041	Titan Battery & Ignition	285	Highland cross	Rutherford
38042	Sicomac Carriers	285	Highland cross	Rutherford.
38043	U.S. Post office		Park Ave	Rutherford
38019	Polymer Corp.	285	Highland Cross	
38034	Shear Knife Grinding Co.	49	Meadow Rd.	Rutherford

BCSA0159026

CLINTON BOGERT ASSOCIATES

CONSULTING ENGINEERS

JOB NO. _____

PROJECT _____ DATE _____

SUBJECT _____ SHEET 3 OF 4

DETAIL List of Mfg. Industris in JM. COMPUTED BY S.S. CHECKED BY _____

INDUSTRY NUMBER	NAME OF INDUSTRY	ADDRESS	
EAST RUTHERFORD			
39001	Abbott Screen Process PTG.	299 Hackensack St.	E-Rutherford
39005	Anders Chemical corp.	26 Popular St.	E-Rutherford
39006	Arrow Tool & Die	117 Herman St.	E-Rutherford
39007	Asbestos Cement Mach.	51 Paterson Ave.	E-Rutherford
39008	Aztec Products Inc.	468 Paterson Ave.	E-Rutherford
39010	Becton Dickinson & Co.	Stanley St.	E-Rutherford
39011	Bell Container corp.	1 Maple St.	E-Rutherford
39013	Bergen Sheet Metal.	240 Hackensack St.	E-Rutherford
39020	Chas E Chapin Co.	253 Hackensack St.	E-Rutherford
39025	Courier Citizen Co.	230 Boiling Springs	E-Rutherford
39026	Dawn Bible Student Assoc.	199 Railroad Ave.	E-Rutherford
39027	Dina Linens.	150 Park Ave.	E-Rutherford
39030	Flintkote Co.	480 Central Ave	E-Rutherford
39032	General PTG Ink Co.	390 Central Ave	E-Rutherford
39037	Grove Stamping & Man	366 Grove St.	E-Rutherford
39038	Hettinger Elec. Mfg. Co	10-20 Winter Pl.	E-Rutherford
39039	Hoboken Wd. Flooring	100 Willow St.	E-Rutherford
39041	Insul-Fab Plastics Inc	150 Union Ave	E-Rutherford
39046	La Gatto Bookbinding	396 Paterson	E-Rutherford
39053	McGonegal Mfg. Co.	405 Railroad Ave	E-Rutherford
39057	Perma-Lined Co.	Paterson & Oak	E-Rutherford
39058	Plastic Mold Tool & Die	1 Maple St.	E-Rutherford
39059	Porta Display	132 Union Ave	E-Rutherford
39062	Rutherford Mach. Co.	401 Central	E-Rutherford
39071	T. Buszko Emb.	195 Hackensack St.	E-Rutherford
39077	Z+A. Printing Co.	349 Railroad Ave	E-Rutherford
39078	Zenith Precision Inc	536 Paterson Ave	E-Rutherford
39086	Cadillac carbide cutting	345 Railrod Ave	E-Rutherford
39088	Hive Manufacturing Co.	366 Grove St.	E-Rutherford
39089	AQuilogg	117 Herman St	E-Rutherford
39090	Arlington Casket Co	150 Park Ave	E-Rutherford
39091	Gallo's	1 Maple St.	E-Rutherford
39092	Converter Graphics.	1 Maple St	E-Rutherford
39093	Park Generator Co.	456 Paterson Ave	E-Rutherford
39094	James Falcon Svc	275 Railroad Ave	E-Rutherford
~~39095~~	~~Wellington Synthetics~~	~~Whelan Road~~	~~E-Rutherford~~
39096	Associated Metal Prod.	175 Hackensack Ave	E-Rutherford
39097	Rapid Repro.	275 Paterson Ave	E-Rutherford
39098	European Tours Travel.	277 Paterson Ave	E-Rutherford
39099	Harvey Rubins Dog School.	239 Paterson Ave	E-Rutherford
39101	F Schanerman	135 Clinton Pl	E-Rutherford
39104	U.S. Post Office	296 Hackensack	E-Rutherford

BCSA0159027

CLINTON BOGERT ASSOCIATES

CONSULTING ENGINEERS

JOB NO.

PROJECT

DATE

SUBJECT

SHEET 4 OF 4

DETAIL List of Manufacturing Industry in JM COMPUTED BY CHECKED BY

EAST RUTHERFORD (cont'd.)

INDUSTRY NUMBER	NAME OF INDUSTRY	ADDRESS
39017	Dubois Chemical Co.	Dubois St. & Union Ave.
39028	Engravers Specialties Labs	153 Union Ave.

BCSA0159028

ATTACHMENT 19

Christensen

RECEIVED
SEP 21 19
DEPT. OF ENVIRON. PROTECTION
Division Water Resources
Bureau of Information Systems

WALTER M. SLOMIENSKI, JR., ESQ.
112 Locust Avenue
Wallington, New Jersey 07057
(201) 777-5000
Attorney for Joint Meeting, Rutherford, East Rutherford and Carl

AFFIDAVIT OF EXEMPTION

State of New Jersey
County of Bergen

Dominick Presto, says under oath:

(1) I am the Mayor of the Borough of Carlstadt and the Chairman of the Joint Meeting, Rutherford, East Rutherford and Carlstadt.

(2) The Joint Meeting has been issued a New Jersey Pollutant Discharge Elimination System Permit # NJ0022756.

(3) By the terms of a Partial Consent Decree entered by the United States District Court for the District of New Jersey on November 14, 1985, the Joint Meeting was ordered to cease discharges on January 1, 1988.

(4) Pursuant to the terms of the Partial Consent Decree, on January 13, 1988, all flows from the Joint Meeting treatment plant were conveyed to the Bergen County Utilities Authority.

(5) Therefore, the Joint Meeting no longer has a discharge and no longer is required to obtain a New Jersey Pollutant Discharge Elimination System Permit.

BCSA009287T

(6) The purpose of this Affidavit of Exemption is to terminate the permit previously issued to the Joint Meeting, Rutherford, East Rutherford and Carlstadt.

Signed and sworn to before
me on June 12, 1990

Walter M. Slomienski, Jr.
Attorney at Law
State of New Jersey

Dominick Presto
Chairman, Joint Meeting
Rutherford, East Rutherford
and Carlstadt

RECEIVED
SEP 21 1990
DEPT. OF ENVIRON. PROTECTION
Division Water Resources
Bureau of Information Systems

BCSA0092872

ATTACHMENT 20

Permit Number: NJ0022756

Name of Permittee: Joint Meeting
Rutherford, East Rutherford & Carlstadt

Effective Date: March 31, 1979

Expiration Date: July 1, 1983

NATIONAL POLLUTANT DISCHARGE ELIMINATION SYSTEM

PERMIT TO DISCHARGE

In reference to the application received from the above-mentioned permittee for a permit authorizing the discharge of pollutants in compliance with the provisions of the Clean Water Act, as amended by the Clean Water Act Amendments of 1977, P.L. 95-217, (33 U.S.C. §§1251-1376) (hereinafter referred to as "the Act").

Joint Meeting- Rutherford East Rutherford-Carlstadt
P.O. Box 281
Rutherford, New Jersey 07070

(hereinafter referred to as "the Permittee")

is authorized by the Regional Administrator, Region II, U.S. Environmental Protection Agency (EPA), to discharge from:

Joint Meeting-Rutherford, East Rutherford, Carlstadt STP

Foot of Borough Street

Rutherford, New Jersey 07070

to receiving waters named Berry's Creek

in accordance with the following conditions.

EXHIBIT B

A. GENERAL CONDITIONS

1. All dischargers authorized herein shall be consistent with the terms and conditions of this permit. The discharge of any pollutant more frequently than, or at a level in excess of, that identified and authorized by this permit shall constitute a violation of the terms and conditions of this permit. Such a violation may result in the imposition of civil and/or criminal penalties as provided for in Section 309 of the Act. Facility modifications, additions, and/or expansions that increase the plant capacity must be reported to the permitting authority and this permit then modified or re-issued to reflect such changes. Any anticipated change in the facility discharge, including any new significant industrial discharge or significant changes in the quantity or quality of existing industrial discharges to the treatment system that will result in new or increased discharges of pollutants must be reported to the Regional Administrator. Modifications to the permit may then be made to reflect any necessary changes in permit conditions, including any necessary effluent limitations for any pollutants not identified and limited herein. In no cases are any new connections, increased flows, or significant changes in influent quality permitted that will cause violation of the effluent limitations specified herein.

2. After notice and opportunity for a hearing, this permit may be modified, suspended or revoked in whole or in part during its term for cause including, but not limited to, the following:

   a. violation of any terms or conditions of this permit;
   b. obtaining this permit by misrepresentation or failure to disclose fully all relevant facts; or,
   c. a change in any condition that requires either a temporary or permanent reduction or elimination of the permitted discharge.

3. Notwithstanding 2 above, if a toxic effluent standard or prohibition (including any schedule of compliance specified in such effluent standard or prohibition) is established under Section 307(a) of the Act for a toxic pollutant which is present in the discharge authorized herein and such standard or prohibition is more stringent than any limitation upon such pollutant in this permit, this permit shall be revised or modified in accordance with the toxic effluent standard or prohibition and the permittee shall be so notified.

4. The permittee shall allow the head of the State water pollution control agency, the Regional Administrator, and/or their authorized representative, upon the presentation of credentials:

   a. to enter upon the permittee's premises where an effluent source is located or in which any records are required to be kept under the terms and conditions of this permit;
   b. to have access to and copy at reasonable times any records required to be kept under the terms and conditions of this permit;
   c. to inspect at reasonable times any monitoring equipment or monitoring methods required in this permit; or,
   d. to sample at reasonable times any discharge of pollutants;
   e. to inspect the operation of the treatment facilities.

5. The issuance of this permit does not convey any property rights in either real or personal property, or any exclusive privileges, nor does it authorize any injury to private property or any invasion of personal rights, nor any infringement of Federal, State or local laws or regulations; nor does it obviate the necessity of obtaining State or local assent required by law for the discharge authorized.

6. This permit does not authorize or approve the construction of any onshore or offshore physical structures or facilities or the undertaking of any work in any navigable waters.

7. Except for data determined to be confidential under Section 308 of the Act, all monitoring reports required by this permit shall be available for public inspection at the offices of the head of the State water pollution control agency and the Regional Administrator. Knowingly making any false statement on any such report may result in the imposition of criminal penalties as provided for in Section 309 of the Act.

8. The diversion or bypass of any discharge from the treatment works by the permittee is prohibited, except: (1) where unavoidable to prevent loss of life or severe property damage; or (2) where excessive storm drainage or runoff would damage any facilities necessary for compliance with the terms and conditions of this permit. The permittee shall notify the Regional Administrator in writing within 72 hours of each diversion or bypass in accordance with the procedure specified below for reporting non-compliance. The permittee shall within 30 days after such incident submit to EPA for approval a plan to prevent recurrence of such incidents.

9. If for any reason the permittee does not comply with or will be unable to comply with any effluent limitation specified in this permit, or should any unusual or extraordinary discharge of wastes occur from the facilities herein permitted, the permittee shall immediately notify the Regional Administrator and appropriate State agency by telephone and provide the same authorities with the following information in writing within five (5) days of such notification:

   a. A description of the non-complying discharge including its impact upon the receiving waters.
   b. Cause of non-compliance.
   c. Anticipated time the condition of non-compliance is expected to continue, or if such condition has been corrected, the duration of the period of non-compliance.
   d. Steps taken by the permittee to reduce and eliminate the non-complying discharge.
   e. Steps to be taken by the permittee to prevent recurrence of the condition of non-compliance.

10. The permittee shall take all reasonable steps to minimize any adverse impace to navigable waters resulting from non-compliance with any effluent limitation specified in this permit. The permittee will also provide accelerated or additional monitoring as necessary to determine the nature and impact of the non-complying discharge.

11. Except as provided in permit condition 8 on bypassing, nothing in this permit shall be construed to relieve the permittee from civil or criminal penalties for non-compliance.

12. Nothing in this permit shall be construed to preclude the institution of any legal action nor relieve the permittee from any responsibilities, liabilities, or penalties established pursuant to any applicable State law or regulation under authority preserved by Section 510 of the Act.

13. In the event of any change in control or ownership of facilities from which the authorized discharges emanate, the permittee shall notify the succeeding owner or controller of the existence of this permit by letter, a copy of which shall be forwarded to the Regional Administrator and the State water pollution control agency.

14. The provisions of this permit are severable, and if any provision of this permit, or the application of any provisions of this permit to any circumstance, is held invalid, the application of such provision to other circumstances, and the remainder of this permit, shall not be affected thereby.

15. The permittee shall provide notice to the Regional Administrator of the following:

    a. Any new introduction of pollutants into such treatment works from a source which would be a new source as defined in Section 306 of the Act if such source were discharging pollutants;
    b. Any new introduction of pollutants which exceeds 10,000 gallons on any one (1) day into such treatment works from a source which would be subject to Section 301 of the Act if such source were discharging pollutants; and,
    c. Any substantial change in volume or character of pollutants being introduced into such treatment works by a source introducing pollutants into such works at the time of issuance of the permit.

    Such notice shall include information on the quality and quantity of effluent to be introduced into such treatment works; and an anticipated impact of such change in the quantity or quality of effluent to be discharged from such publicly owned treatment works.

16. The permittee shall require any industrial user of such treatment works to comply with the requirements of Section 204(b), 307 and 308 of the Act. Any industrial user subject to the requirements of Section 307 of the Act shall be required by the permittee to prepare and transmit to the Regional Administrator periodic notice (over intervals not to exceed nine (9) months) of progress toward full compliance with Section 307 requirements.

17. The permittee shall require any industrial user of storm sewers to comply with the requirement of Section 308 of the Act.

18. The permittee shall comply with Sections 201(b) through 201(g) of the Act.

BCSA0066772

B. REQUIRED EFFLUENT LIMITATIONS AND MONITORING AND OPERATIONAL REQUIREMENTS

1.A. Required Effluent Limitations

During the period beginning on the date determined by Condition C-II and lasting until the expiration date of this permit, discharges shall be limited and monitored by the permittee as specified below:

a. A substantially complete removal of settleable solids shall be achieved.

b. See Table I.

c. Except as specifically authorized in this permit, the permittee shall not discharge floating solids or visible foam.

d. The effluent values for pH shall remain within the limits of 6.0 to 9.0.

e. The 30-day average quantity of effluent discharged from the wastewater treatment facility shall not exceed 4.0 million gallons per day (MGD).

f. See Section C.

1.B. Interim Effluent Limitations

During the period beginning on the effective date of this permit and lasting until the date determined by Condition C-II, discharges shall be limited and monitored by the permittee as specified below:

a. Same as permit Condition B.1.A.a.

b. See Table I-A.

c. Same as permit Condition B.1.A.c.

d. Same as permit Condition B.1.A.d.

e. The 30 day average quantity of effluent discharged from the wastewater treatment facility shall not exceed 4.0 MGD.

2. Facility Operation and Quality Control

All waste collection, control, treatment and disposal facilities shall be operated in a manner consistant with the following:

a. At all times, all facilities shall be maintained as efficiently as possible and operated as efficiently as possible and in a manner which will minimize upsets and discharges of excessive pollutants.

b. The permittee shall provide an adequate operating staff which is duly qualified to carry out the operation, maintenance and testing functions required to insure compliance with the conditions of this permit.

c. Maintenance of treatment facilities that results in degradation of effluent quality shall be scheduled during non-critical water quality periods and shall be carried out in a manner subject to approval by the permitting authority.

d. Prohibited Wastes

The permittee shall under no circumstances allow introduction of wastes into the treatment works identified as "Prohibited Wastes" pursuant to Section 307 of the Act. The following wastes are prohibited as published in 40 CFR 128:

(i) Wastes which create a fire or explosion hazard in the publicly owned treatment works.

(ii) Wastes which will cause corrosive structural damage to treatment works, but in no case wastes with a pH lower than 5.0, unless the works is designed to accomodate such wastes.

(iii) Solid or viscous wastes in amounts which would cause obstruction to the flow in sewers, or other interference with the proper operation of the publicly owned treatment works.

(iv) Wastes at a flow rate and/or pollutant discharge rate which is excessive over relatively short time periods so that there is a treatment process upset and subsequent loss of treatment efficiency.

3. Self-Monitoring and Reporting Requirements

a. The permittee shall effectively monitor the operation and efficiency of all treatment and control facilities and the quantity and quality of the treated discharge. Monitoring data required by this permit shall be summarized on an average calendar month basis. The monthly summaries of data will then be used to prepare a single quarterly report. Duplicate original copies of the Discharge Monitoring Report form (EPA Form T-40), properly completed and signed by the permittee must be submitted within 28 days after the end of each report period to the Regional Administrator and the State agency at the following addresses:

Permits Administration Branch
Environmental Protection Agency
Region II
26 Federal Plaza
New York, New York 10007

Assistant Director
Pollution Control, Monitoring,
Surveillance and Enforcement Element
Division of Water Resources
New Jersey State Department of
Environmental Protection
P.O. Box CN-029
Trenton, New Jersey 08625

Quarterly reports will be required for periods beginning on the first day of the first month following the issuance of this permit. The data collected and submitted shall include the parameters and testing frequencies specified in Table II. Samples and measurements of the effluent taken to achieve compliance with the monitoring requirements specified above shall be taken at the point of combined flow into the outfall sewer.

Samples and measurements of the influent wastewater taken to meet the monitoring requirements specified above shall be taken at the point of plant inflow.

b. Sampling and Analysis Methods

Other measurements of oxygen demand can be substituted for Bio-chemical Oxygen Demand (BOD) where the permittee can demonstrate long-term correlation of the method with BOD values. Substitution of such measurements must receive prior approval of the permitting authority.

The analytical and sampling methods used shall conform to the regulations published pursuant to Section 304(g) of the Act. These regulations are published in the Federal Register as 40 CFR Part 136. However, different but equivalent methods are allowable if they receive the prior written approval of the permitting authority.

The permittee shall periodically calibrate and perform maintenance procedures on all monitoring and analytical instrumentation at intervals to insure accuracy of measurements.

4. Recording

The permittee shall record for all samples the date and time of sampling, the sampling method used, the date analyses were performed, the identity of the analysts, and the results of all required analyses and measurements.

All sampling and analytical records mentioned in the preceding paragraph shall be retained for a minimum of three (3) years. The permittee shall also retain all original recordings from any continuous monitoring instrumentation, and any calibration and maintenance records, for a minimum of three (3) years. These periods will be extended during the course of any unresolved litigation, or when so requested by the permitting authority.

5. Solids Disposal

Collected screenings, slurries, sludges, and other solids shall be disposed of in such a manner as to prevent such materials from entering the waters of the United States except in accordance with a permit issued under Section 405 of the Act. If for any reason such materials do enter the waters of the United States, the permittee shall notify the permitting authority with the following information in writing within 14 days:

1. Dates of the occurrence;
2. A description of the non-complying discharge (nature and volume);
3. Cause of non-compliance;
4. Steps taken to reduce and eliminate the non-complying discharge; and,
5. Steps to be taken to prevent recurrence of the condition of non-compliance.

6. **Discharge Location Description**

Discharge No. 001

Latitude: 40° 48' 37"

Longitude: 74° 09' 36"

TABLE I-A
REQUIRED INTERIM EFFLUENT LIMITATIONS

Effluent Characteristics	Discharge Load Allocations				Discharge* Concentrations Limitations		Minimum* Percent Removal Limitations
	30 Consecutive Day Average		7 Consecutive Day Average		30 Day Average (mg/l)	7 Day Average (mg/l)	30 Day Average
	lb/day	kg/day	lb/day	kg/day			
5-Day-20 °C Biochemical Oxygen Demand	7670	3480	11510	5220	230	345	30
Suspended Solids	3840	1740	5840	2650	115	175	45

*whichever is more stringent

TABLE I
REQUIRED INTERIM LIMITATIONS

Effluent Characteristics	Discharge Load Allocations				Discharge* Concentrations Limitations		Minimum* Percent Removal Limitations
	30 Consecutive Day Average		7 Consecutive Day Average		30 Day Average (mg/l)	7 Day Average (mg/l)	30 Day Average
	lb/day	kg/day	lb/day	kg/day			
5-Day-20 °C Biochemical Oxygen Demand	6510	2950	9840	4460	195	295	40
Suspended Solids	2840	1290	4170	1890	85	125	60

*whichever is more stringent

BCSA0066779

Table II - Self-Monitoring Requirements 1/

Parameter	Minimum Monitoring Requirements Measurement Frequency	Sample Type
Total Flow, mgd	continuous	N/A
BOD_5, mg/l	once per week	24-hour composi
BOD_5, kg/day*	---------	---
Settleable Solids, ml/l	twice per day	grab
Suspended Solids, mg/l	once per week	24-hour compos
Suspended Solids, kg/day*	---------	----
Residual Chlorine, mg/l 2/	twice per day	grab
Fecal Coliform, N per 100 ml 2/	once per week	grab
pH	twice per day	grab
Temperature, °C 2/	twice per day	grab

1/ Except where indicated, influent and effluent measurement and testing are required.

2/ Only effluent testing required.

* To be determined based on actual flow and actual results for parameters noted.

C.I. STATE CERTIFIED REQUIREMENTS

As required by the New Jersey State Department of Environmental Protection (NJSDEP) Certification of Joint Meeting; Rutherford for the purpose of assuring compliance with New Jersey's water quality standards and other appropriate requirements of State law as provided by Section 401(d) of the Act, the permittee shall comply with the following effluent limitations and other limitations:

1. The permittee shall discharge so as not to violate New Jersey Surface Water Quality Standards, N.J.A.C. 7:9-4 et. seq. (Docket No. DEP 012-74-11).

2. Pursuant to N.J.A.C. 7:9-4.4 (a) (13), effective year-round disinfection shall be required for all treated wastewater discharges containing pathogenic organisms.

3. The applicant shall comply with the approved recommendations of the Water Quality Management Basin Plan for the Northeast New Jersey Urban Area in accordance with Section 303 (e) of the Act.

4. The applicant shall comply with the areawide Water Quality Management Plan for Northeast New Jersey being developed by the New Jersey Department of Environmental Protection in accordance with Section 208 of the Act.

5. The applicant shall comply with the approved recommendations of the Facility Plan being developed by the Bergen County Sewer Authority in accordance with Section 201 of the Act.

   Upon approval of the Facility Plan this permit may be modified to include a schedule of achieving compliance with N.J.A.C. 7:9-4.6 by implementing the recommendations of the Facility Plan. In the interim the standards and compliance dates set forth in the NPDES permit are applicable except that the Department will strive to optimize the effluent quality through implementation of the Max/Min report and/or the application of State laws and regulations including sewer bans, when deemed appropriate by the Department.

C.II. Schedule of Compliance to Attain Required Effluent Limitation 1/ 2/ 3/

The permittee has indicated that the level of treatment currently being afforded the discharge is not meeting the level of treatment as provided for in Section 301(b)(1)(B) and (C) of the Act, and has requested a time extension under Section 301(i) of the Act. Upon review of all the facts presented in this matter, the EPA hereby grants such a time extension provided that the permittee shall comply with the following schedule and shall report to the Regional Administrator and the State Agency within 14 days following each date on the schedule detailing its compliance or non-compliance.

1. By January 31, 1979, start construction at the wastewater treatment facility.

2. Construction should be completed by August 31, 1979.

3. By September 30, 1979, attain the effluent requirements set forth in Table I of the permit.

4. All flows will be conveyed to the Bergen County Regional Sewer Authority (BCSA) as soon as those regional facilities are operable.

1/ If at any time, it is determined that Federal funding will not be available in time to assure compliance by July 1, 1983 with the final effluent limitations contained in this permit, this time extension shall be revoked by the Regional Administrator.

2/ If the time period allotted for the completion of an interim requirement specified above is greater than 9 months, then the permittee shall submit a report detailing its progress toward completion of the interim requirement at the end of the first 9-month period and at the end of each succeeding 9-month period (including of course, the report, specified above, required within 14 days following the specified completion date).

3/ Each notice of non-compliance shall include:

A. A short description of the non-compliance;
B. A description of any actions taken or proposed by the permittee to comply with the elapsed schedule requirement without further delay;
C. A description of any factors which tend to explain or mitigate the non-compliance;
D. An estimate of the date the permittee will comply with the elapsed schedule requirement and an assessment of the probability that the permittee will meet the next schedule requirement on time.

0017

The issuance of this permit shall in no way negate, modify or affect the requirements of Condition A(5) of this permit. The issuance of the permit does not represent a decision or recommendation on the part of the U.S. Environmental Protection Agency as to the desireability or legality of the construction by the permittee of facilities, buildings or other structures of whatever type.

This permit shall become effective on March 31, 1979.

This permit and the authorization to discharge shall be binding upon the permittee and any successors in interest of the permittee and shall expire at midnight five (5) years from the effective date of this permit. The permittee shall not discharge after the above date of expiration. In order to receive authorization to discharge beyond the above date of expiration, the permittee shall submit such information, forms and fees as are required by the agency authorized to issue NPDES permits no later than 180 days prior to the above date of expiration.

By authority of Eckardt C. Beck
(Regional Administrator)

February 14, 1979
(Date)

(Signature)
Meyer Scolnick
Director
Enforcement Division

ATTACHMENT 21

R Hames

STATE OF NEW JERSEY

HACKENSACK MEADOWLANDS DEVELOPMENT COMMISSION

FEASIBILITY REPORT

ON

WATER POLLUTION CONTROL SYSTEMS

IN CONNECTION WITH

THE DEVELOPMENT OF THE HACKENSACK MEADOWLANDS

IN

BERGEN AND HUDSON COUNTIES

SEPTEMBER 1970

JOHN J. KASSNER & CO., INC.
Consulting Engineers
250 Broadway
New York, N.Y., 10007

BCSA0078897

STATE OF NEW JERSEY

HACKENSACK MEADOWLANDS DEVELOPMENT COMMISSION

EDMUND T. HUME
Chairman

WILLIAM D. McDOWELL
Vice Chairman

JOHN E. VAUGHAN
Treasurer

ISADORE GLAUBERMAN

IRWIN W. SILVERMAN

MYLES S. SPECTOR

Joseph R. Williams

CLIFFORD A. GOLDMAN
Acting Executive Director

CLAYSON W. FOLEY
Acting Chief Engineer

SEPTEMBER 1970

JOHN J. KASSNER & CO., INC.
Consulting Engineers
250 Broadway
New York, N.Y., 10007

BCSA0078898

13. Rutherford, East Rutherford, Carlstadt Joint Meeting Plant

Berrys Creek (via Berrys Creek Canal) - Tributary Mile 1.8

The Rutherford, East Rutherford, Carlstadt Joint Meeting (Tri-Borough) Plant is located east of N.J. Route 17 at the foot of Borough Street in the Borough of Rutherford near the westerly right-of-way line of the Erie-Lackawanna Railroad.

The Tri-Borough Joint Meeting is an independent agency established by the Boroughs of Rutherford, East Rutherford and Carlstadt in 1938 for the purpose of providing interceptor sewers and sewage treatment facilities for approximately 1,040 tributary acres which lie in these three communities, generally to the west of N.J. Route 17. The sewage emanating from approximately 860 acres of Rutherford and East Rutherford, lying in the Passaic River drainage basin, is independently collected by the respective Boroughs and discharged to the Passaic Valley Sewage Commission. The present area served by the Tri-Borough Plant lies to the east of the Passaic Valley-Hackensack Valley ridge line and generally to the west of Berrys Creek. The location of the Tri-Borough Plant and its present service area is shown on Exhibit No. 4, Existing Sanitary Sewer Service Areas.

The Public Health Service, U. S. Department of Health, Education and Welfare, reported that this system served approximately 32,100 persons in 1962. According to the 1960 census, the three Boroughs had

BCSA0078995

a resident population of 34,284 persons. The Division of Economic Development of the New Jersey Department of Conservation and Economic Development has estimated the population of these three communities to be 38,570 as of July 1, 1968.

Observations indicate that the area of these three communities, lying on the westerly slope of the Hackensack River Valley to the west of N.J. Route 17 has been developed to almost complete saturation with mixed residential, commercial and industrial development. For the most part, however, this upland area can be characterized as being essentially residential in character of low to medium density. The area to the east of Route 17 and west of Berrys Creek is low-lying meadowland which has been intensely developed for industrial use with some being heavy-industrial in nature. The meadowlands to the east of Berrys Creek is zoned for industry and is mostly vacant but has been developed for industrial use along existing roads. Vacant areas between these arteries are receiving heavy pressure for industrially oriented development.

From the 1969 municipal budgets and from information obtained from municipal officials, it was reported that the Borough of Carlstadt appropriated $40,065, the Borough of East Rutherford $42,000 and the Borough of Rutherford $45,000 for their respective shares of the expenses of Tri-Borough Joint Meeting 1969 budget and East Rutherford appropriated

BCSA0078996

$21,026.67 and Rutherford $14,900 for payment of their respective shares of the Passaic Valley Sewer Commission's expenses. The Borough of Rutherford further appropriated $16,000 for salaries and wages, and $2,400 for other expenses in connection with the maintenance of that Borough's sewage collection system. No information was available relative to appropriations made by the Boroughs of Carlstadt and East Rutherford for the maintenance of their collection systems. Neither the Joint Meeting nor the three Boroughs impose separate sewer charges for the use of their facilities, the revenue for these purposes being derived from taxes on local property. However, it is understood that the Borough of Rutherford receives an annual payment from a dye plant located within its corporate limits presumably because of the character of the waste discharged by that industry. Rutherford has an ordinance which regulates the discharge of industrial waste to its system and the Joint Meeting has regulations controlling the character of the waste to be treated. However, according to municipal officials, the Boroughs of Carlstadt and East Rutherford have no ordinances which impose municipal control over the character and strengths of sewage allowed to be discharged to their systems.

The individual municipal sewage collection systems located in the present Joint Meeting service area are owned and maintained by the individual municipalities and are of the separate sanitary sewer type. These collection systems drain to the Joint Meeting trunk sewers by gravity.

BCSA0078997

The Joint Meeting trunk sewers are separate gravity sewers owned and maintained by the Joint Meeting. Sewage from the north and east enters the plant through a 36 inch diameter sewer from Borough Street in Rutherford. This sewer extends along the southerly right-of-way of the Erie-Lackawanna Railroad, crossing the railroad at a point approximately 250 feet east of N.J. Route 17. This 36 inch sewer continues along the northerly line of the Railroad to Route 17 where it proceeds in a northerly direction along the east side of Route 17 to Union Avenue in East Rutherford. A 24 inch and 18 inch diameter spur extends westerly in Union Avenue to Hackensack Street. The main trunk continues northerly some 150 feet to the east of Route 17, along William Street to the Carlstadt boundary at Paterson Plank Road. The line continues in Carlstadt in Twelfth Street to Broad Street where two 18 inch diameter lines join, one from the east from Fourteenth Street and one from the west from Route 17. At Route 17, a 10 inch spur enters from the west on Broad Street from Eighth Street. The trunk extends as a 12 inch diameter sewer along Route 17 to the north, terminating at Berry Avenue. These trunk sewers were constructed by the Joint Meeting in 1938 together with some 8 inch diameter sewers in Hackensack Street from Monroe Avenue to Mozart Street, in Union Avenue from Broad Street to Hackensack Street, and in Hackensack Street from just west of Union Street to Poplar Street and Paterson Avenue in East Rutherford. Information relative to the slopes or elevations of these Joint meeting trunk sewers was not available.

BCSA0078998

According to a report entitled "Preliminary Report on Sewerage Facilities" prepared by Ronald B. Brown and Clinton Bogert Associates, consulting engineers to the Joint Meeting, in June 1966, a 30 inch diameter trunk extends in Borough Street from the Plant to Route 17 and an 18 inch diameter trunk is located in Veterans Boulevard extending southwardly to N.J. State Highway Route 3. Information relative to the age, slopes or elevations of these sewers was not available.

The present Tri-Borough Joint Meeting Treatment Plant was placed in service in 1941 as a modern secondary treatment facility having a design capacity of 4.0 mgd. It replaced the existing Borough of Rutherford municipal plant which was an obsolete, primary facility using Imhoff tanks.

According to New Jersey State Department of Health records, a pollution abatement order was issued to the Joint Meeting in May 1967, requiring a minimum reduction of BOD of 80% and an effluent concentration of BOD not greater than 50 ppm.

According to the 1966 engineering report, the present effective plant hydraulic capacity would be 2.9 mgd at average flow based upon present design requirements, and is established by the lowest rated capacity from among the various plant units.

Present flows to the Joint Meeting Plant have been variously estimated as being in excess of 3 mgd average daily, with estimated peak flows of 11 mgd due to combined storm flow and industrial peak flows. Peak flows presently impose excessive hydraulic loadings on various plant units, which in turn contribute to the inability of the present plant to meet New Jersey State Department of Health requirements. Not only is the existing plant hydraulically overloaded but organic overloading also occurs due to the deleterious effect that strong plating, dye and chemical wastes have on the biological filter media.

BCSA0078999

According to the municipal tax assessment maps of the Borough of Rutherford, the Joint Meeting Plant occupies a site consisting of approximately 10.7 acres, most of which appears to be occupied or used by the existing facilities.

A schematic flow diagram is shown on Exhibit No. 5D and is a composite of information obtained from the 1966 Brown & Bogert Report, the New Jersey State Department of Health and from data furnished by officials of the Joint Meeting as to treatment presently being afforded.

Flow into the plant first passes through two mechanically cleaned bar screens into a wet well and is then pumped into the grit chamber. There are four raw sewage lift pumps providing a total capacity of 11 mgd, however, standby electric power facilities provide only 4 mgd of dependable pumping capacity. One of the grit channels is presently equipped with mechanical grit removal equipment installed about 1966.

Flow next passes through rapid mix and flocculation chambers which were initially provided for the addition of a flocculant chemical prior to primary sedimentation. This equipment has seriously deteriorated and chemicals are not presently being added, so that the units apparently now contribute little to the treatment process. From the rapid mix and flocculation chambers, flow enters two primary settling tanks, each of which is equipped with sludge collectors, but not equipped for grease and scum removal. These units were converted from their previous function as Imhoff tanks to their present usage as primary settling tanks. These tanks are the plant units which limit present plant hydraulic capacity to 2.9 mgd.

BCSA0079000

During periods of peak flow, a by-pass from the influent channel of the tanks normally conducts flow around the tanks and the trickling filters to the secondary settling tank.

Following the completion of primary treatment in the primary treatment tanks, flow enters the secondary pumping station. The station has one 4 mgd unit and two 2 mgd units, but there is no standby power available for the station.

Flow from the secondary pumping station is fed to standard rate trickling filters by a filter dosing chamber with dosing siphons. There are four units, of which three are normally in service. Each filter is 110 feet in diameter and has an 8 foot deep crushed stone bed.

From the trickling filters, flow enters two secondary settling tanks which were also converted from Imhoff tanks.

Chlorination facilities include an evaporator and three chlorinators. Chlorine is presently applied to the plant influent and to the effluent from the secondary settling tanks. There is, however, no chlorine contact tank to provide required contact time before the plant effluent is discharged into Berrys Creek. Operating records of the Joint Meeting indicate that chlorine dosage varies from 150 to 200 pounds per day.

Sludge removed from the primary and secondary settling tanks is pumped into two digesters. The plant, as originally designed, provided for two stage digestion with sludge heating and utilization of gas produced

BCSA0079001

during digestion. At present, only the sludge pumps are operable. Digester No. 1 was initially equipped with a floating cover and Digester No. 2 with a fixed cover, both of which are reported to be in a seriously deteriorated condition. Facilities for the chemical conditioning of sludge, vacuum filtration and incineration of sludge cake were installed with the initial plant. However, this equipment reportedly has not been used since 1945. From the digesters, sludge is discharged into wet lagoons at the plant site for drying and ultimate disposition in the Meadowlands as land fill.

New Jersey State Department of Health records indicate that the plant efficiency and continuity of operation is seriously affected by malfunctioning of deteriorated equipment in practically all of the plant units. In addition, it appears that some structural deterioration has also taken place in certain plant units, most notably, in the uneven subsidence of foundations of two of the trickling filters and in one area of the plant administration building. In addition to other causes, plant flow data must be considered to be inaccurate because of deterioration and loss of concrete from the Parshall flume.

Problems being experienced in the operation of the plant are many. The lack of grease and scum collection equipment allows floating material to pass to the trickling filters with resultant clogging and inefficient performance of the filters. Plant pumping facilities, both raw sewage and

BCSA0079002

secondary, are unreliable and experience considerable downtime. In addition, the mode of operation of the secondary pumps is not proper for uniform dosing of the trickling filters and contributes, along with the lack of grease and scum collection equipment, to poor filter performance. The industrial components of the flow are apparently of appreciable strength, since it is reported that corrosion of plant equipment represents a major operating problem. In addition to problems internal to the plant, high tides created by storm conditions and high winds are reported to completely flood the plant at times. The inadequate treatment presently afforded to the wastes from this plant has been the subject of much attention from the State Department of Health for a number of years in their efforts to secure correction of plant deficiencies. The plant has at various times been cited for excessive BOD's and suspended solids, by-passing of plant units, coliform bacteria, color and odor, and for insufficient chlorine residual.

The conclusion drawn in the 1966 engineering report was that the most feasible solution for the Joint Meeting's problem is the expansion and upgrading of the present Joint Meeting Plant, provided that a Federal construction grant could be obtained for such a project. The recommended program of improvements includes the construction of a new pumping station with screenings removal, sewage pumping and laboratory facilities, the installation of new chemical feed, chlorination and vacuum filtration

BCSA0079003

equipment in the existing Administration Building, construction of new primary settling tanks and grit removal facilities, modifications and repairs to the existing trickling filters with conversion to high rate dosage, construction of new secondary settling tanks, conversion of the existing secondary settling tank to a chlorine contact tank, addition of new sludge thickeners, modifications and repairs to the sludge digesters, and the restoration of sludge incineration and other sludge handling and disposal facilities. The report indicated that the alternate course of action, in the event that a Federal Grant were not available, should be to investigate service from the Bergen County Sewer Authority for sewage treatment.

The New Jersey State Department of Health recently disapproved an application by the Joint Meeting for a Federal-State Grant-in-Aid to expand and upgrade the facilities at the Joint Meeting Plant on the basis that retention of this plant was not compatible with the regional approach to pollution abatement preferred for this area.

The aforementioned 1966 engineering report to the Joint Meeting also recommended that the Borough of Carlstadt should enter into independent negotiations with the Bergen County Sewer Authority to have that agency provide sewerage facilities for and treatment of the sewage generated in that portion of the Borough's meadowlands lying outside of the Joint Meeting service area. In 1967, the Borough of Carlstadt created the Carlstadt Sewerage Authority as an independent agency to provide service

BCSA0079004

for that portion of its meadowlands lying east of Berrys Creek. The Carlstadt Sewerage Authority subsequently negotiated an agreement with the Bergen County Sewer Authority to have that agency treat the sewage emanating from the Carlstadt Sewerage Authority district.

According to a report and construction plans prepared by Clinton Bogert Associates, consulting engineers to the Carlstadt Sewerage Authority, construction of Stage I sewerage facilities were initiated in 1967 to serve the northeasterly portion of the Authority's district located west of Washington Avenue and generally north of the New Jersey and New York Railroad. This area of approximately 180 acres of improved meadowland contained approximately 55 existing industries which were to be served by this Stage I improvement. The collection system is designed to drain to a pumping station located opposite the end of Jony Drive south of the New Jersey and New York Railroad on the southerly projected line of Commercial Avenue. This system reportedly became operational in 1968 with the completion of construction of the Bergen County Sewer Authority's Hasbrouck Heights Sewer Extension. The outlet from these Stage I facilities is into this sewer extension via a 12 inch diameter force main running northerly along Commercial Avenue from the pumping station.

According to a sewer inventory report prepared by the Bergen County Planning Board, Stage II improvements were under construction as of

BCSA0079005

March 1969. Construction plans prepared by the Authority's consulting engineer indicate that Stage II improvements would serve the southeasterly portion of the district west of Washington Avenue which portion of the district would drain to a pumping station located on Paterson Plank Road approximately 2,900 feet west of Washington Avenue. The pumping station would lift the sewage to enable it to drain into the Stage I improvement by gravity.

Stage II improvements would also serve the area of the district immediately east of Washington Avenue. The sewage from this portion of the district would drain to a new pumping station located on Barrell Street some 2,200 feet east of Washington Avenue. A new outlet for this sewage would be provided by the construction of an 18 inch diameter force main and/or a 36 inch diameter gravity sewer extending northerly in Central Boulevard and Central Boulevard Extension to the Bergen County Sewer Authority Hasbrouck Heights Sewer Extension. It is understood that at least a portion of these Stage II improvements are presently operational.

The Carlstadt Sewerage Authority imposes sewerage charges on the users of its system and uses the revenue thus derived to amortize their sewerage construction bonds, to pay for the treatment charges made by the Bergen County Sewer Authority and to offset administrative and maintenance costs. The service charges imposed by the Carlstadt Sewerage Authority take the form of a one-time connection fee to the system and a use charge schedule based on type of use, water consumption and building

BCSA0079006

area served. These charges and fees are in addition to revenues in the form of real estate taxes which are collected by the Borough of Carlstadt, a portion of which taxes are allocated to that municipality's sewerage maintenance and sewage treatment expenses.

In 1968, the Borough of East Rutherford likewise created an independent agency, the East Rutherford Sewerage Authority, to undertake the planning, financing and construction of a sewerage system in this Borough's meadowland area. This action was taken in response to recommendations contained in a report to the Borough of East Rutherford prepared by Elam and PopoffEngineering Associates in August 1968 entitled "Report on the Feasibility Study for Sanitary Sewerage".

From information, plans and design reports prepared by Pandullo, Chrisbacher, Price Associates, engineering consultants to the Authority, plans for the first four phases of construction of this sewerage system were completed by September of 1969. Contract No. 1 is comprised of a system of sanitary sewers to serve Marietta Parkway, Metro Boulevard and a portion of Montgomery Drive as well as sewers to serve N. J. State Highway Route 20 between Paterson Plank Road and the N. J. State Highway Route 3 ramping system. Contract No. 2 consists of a system of sewers to serve Paterson Plank Road, Murray Hill Parkway and Manor Road. Contract No. 3 encompasses the construction of a permanent pumping station at Gotham Parkway and Paterson Plank Road. The pumping

BCSA0079007

station will discharge into the sewerage system of the Carlstadt Sewerage Authority and thence into the Bergen County Sewer Authority System for treatment. The ultimate design of the entire East Rutherford Sewerage Authority's system envisons collecting the sewage emanating from the "uplands" area of East Rutherford currently served by the Joint Meeting Plant, as well as from the meadowlands area, and discharging it into the Bergen County Sewer Authority facilities for treatment. However, in order to make the initial sewer installations immediately operational, the construction of a temporary pumping station is provided in Contract No. 3-A, at the same location, as an interim measure. The East Rutherford Sewerage Authority has executed a renewable agreement with the Carlstadt Sewerage Authority which covers the discharge of East Rutherford sewage into the Carlstadt Authority's system. The Bergen County Sewer Authority has agreed to this interim method of sewage disposal by the East Rutherford Sewerage Authority. The agreement sets an interim maximum discharge rate of 1.0 mgd and provides for re-evaluating this flow restriction prior to the renewal of the agreement.

Contract No. 4 consists of the installation of sewers in East Union Avenue, Meadow Lark Drive, Bergen Boulevard, Heritage Drive and a portion of Montgomery Drive. It is believed that Contracts Nos. 1, 2, 3-A and 4 were in the process of construction as of the date of this Report, but the systems are not yet in operation.

BCSA0079008

The Bergen County Sewer Authority filed a preliminary application during 1969 for a Federal Grant for part of the cost of a proposed 36 inch diameter force main through the Borough of Carlstadt. The capacity of this force main was to be sufficient to accommodate the ultimate flow from the Borough of East Rutherford and the remainder of the southerly portion of the Bergen County Sewer Authority District, including those portions of the municipalities of Carlstadt, East Rutherford, Rutherford, Lyndhurst and North Arlington lying within the Hackensack River Valley in Bergen County.

In order for the Tri-Borough Joint Meeting to implement the recommendations made in the 1966 Brown and Bogert Engineering Report, it would be necessary for the three municipalities to act in concert. No firm action or commitment is known to have been taken by the Joint Meeting but the previously mentioned independent actions taken by the participating municipalities tends to put the future continuance of this Joint Meeting as a separate entity in doubt. The Borough of Carlstadt is considering diverting the flow from the presently sewered area of its jurisdiction directly into the Bergen County Sewer Authority System, by-passing the Joint Meeting Facilities, in accordance with recommendations contained in a 1967 feasibility study. The Borough of East Rutherford is also considering the possibility of taking similar unilateral action. As far as is known at this time, the Borough of Rutherford has taken no action.

BCSA0079009

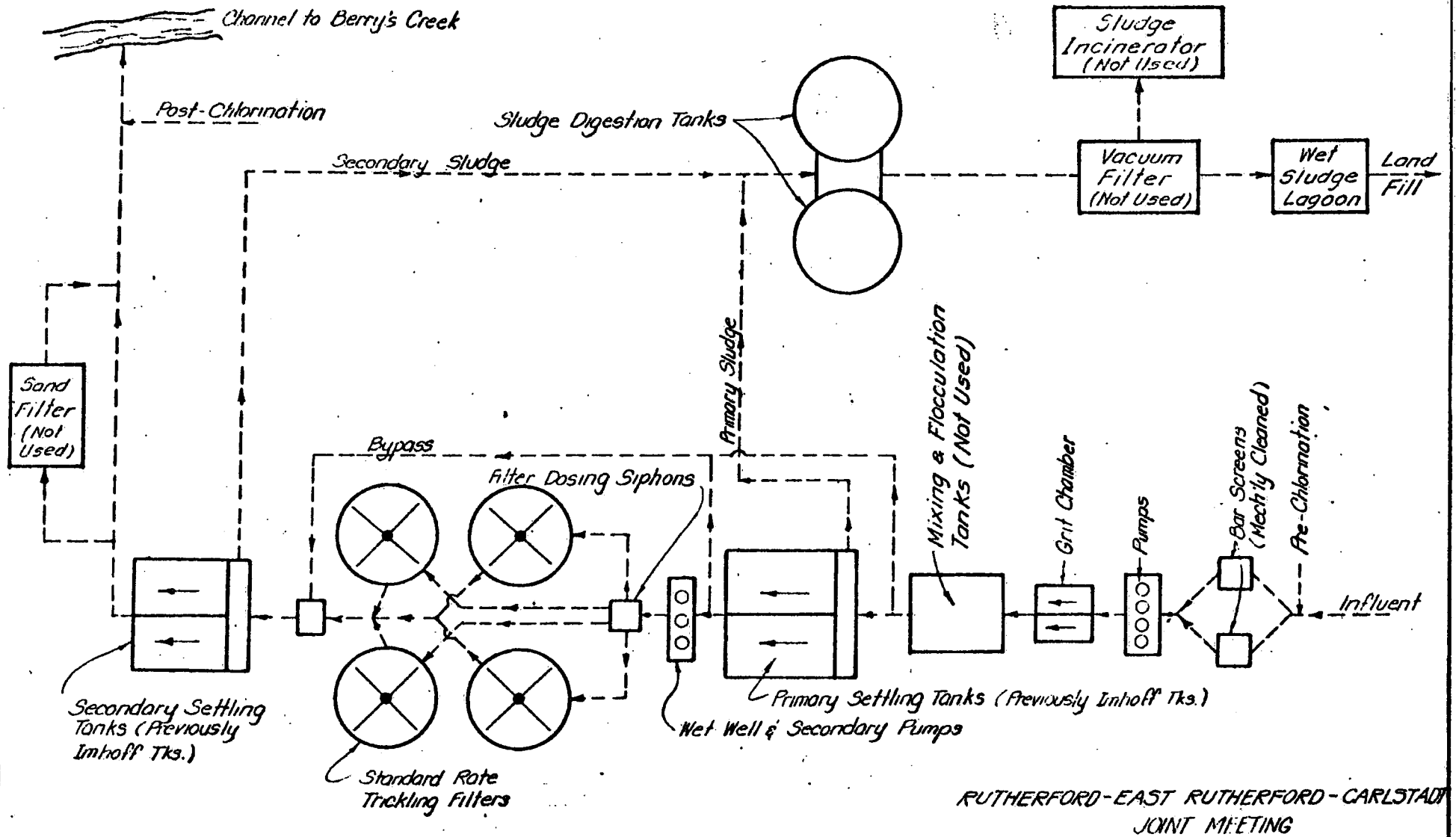

PLANT CAPACITY - 2.9 MGD

RUTHERFORD - EAST RUTHERFORD - CARLSTADT
JOINT MEETING
EXISTING TREATMENT PLANT
SCHEMATIC FLOW DIAGRAM
FEB. 1970

EXHIBIT BCSA0079010

ATTACHMENT 22

APPENDIX
A

JOINT MEETING
RUTHERFORD, EAST RUTHERFORD AND CARLSTADT
NEW JERSEY

PRELIMINARY REPORT ON SEWERAGE FACILITIES

PROPERTY OF
ENGINEERING DEPARTMENT
B. C. U. A.

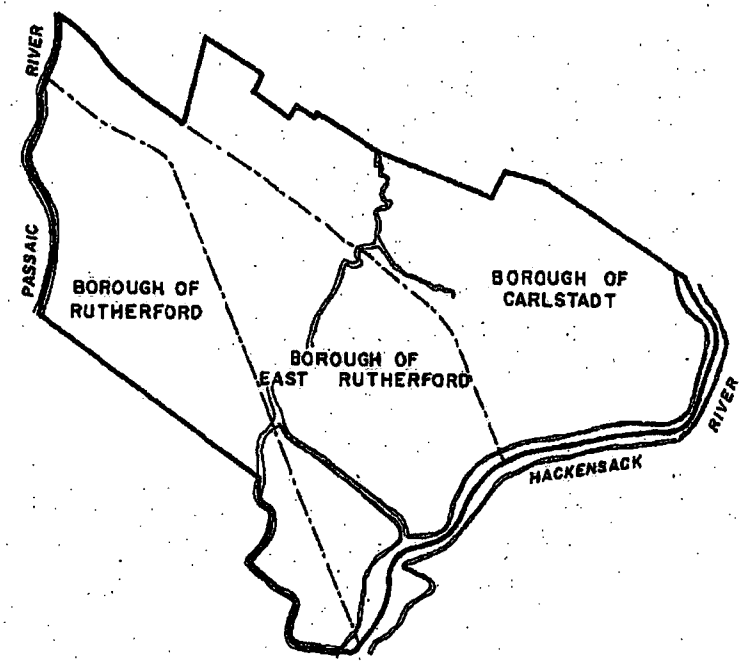

A-11

RONALD B. BROWN
CLINTON BOGERT ASSOCIATES
CONSULTING ENGINEERS
JUNE 1966

BCSA0076679

JOINT MEETING
RUTHERFORD, EAST RUTHERFORD AND CARLSTADT
NEW JERSEY

PRELIMINARY REPORT ON SEWERAGE FACILITIES

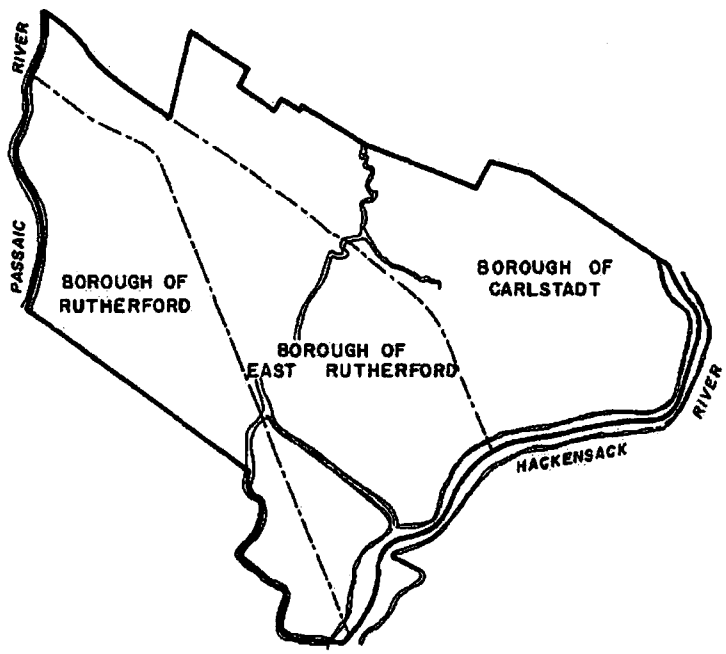

RONALD B. BROWN
CLINTON BOGERT ASSOCIATES
CONSULTING ENGINEERS
JUNE 1966

BCSA0076680

were held with major developers who are proposing construction in this area. A study was also made of soil conditions at various locations in the area in order to determine the types of construction necessary for the installation of sewerage facilities.

Present Flows and Plant Loadings

There has been only a moderate increase in population in the three Boroughs in the last 35 years, with an increase of the total population from 27,420 in 1930 to about 36,000 in 1965; however, there has been a steady industrial growth, originally in the area along Route 17 and the Erie Lackawanna Railroad, and more recently in the meadowland areas east of Route 17.

As a result of the above growth, the flow as well as industrial waste loading at the treatment plant has been steadily increasing. Although there has been some reduction in total annual flow during the past two years as a result of drought conditions and water conservation, it is anticipated that the flow will return to a higher rate upon resumption of normal water use. The average daily plant flow during the period 1955 through 1965 was as follows:

1955 - 1.92 mgd	1961 - 2.65 mgd
1956 - 2.08 "	1962 - 2.90 "
1957 - 2.06 "	1963 - 3.00 "
1958 - 2.15 "	1964 - 3.09 "
1959 - 2.34 "	1965 - 2.96 " (Estimated at 3.3 mgd with normal flow conditions)
1960 - 2.52 "	

In addition to the increased average flows, peak flows to the plant during storms have required operation of all pumps including the standby pump. Thus, maximum

BCSA0076685

flows are at least 11 mgd due to storm flow and high industrial peaks, whereas, most of the plant units were apparently designed for a lower peak flow.

As a result of the above increased flow and loading, deterioration of the treatment plant and more stringent New Jersey State Health Department requirements, the plant is presently not producing a satisfactory effluent, and extensive modifications and repairs to the plant would be required just to provide adequate treatment for flows from the areas presently sewered. However, the following additional flows must also be considered:

(a) The UOP Company in East Rutherford desires to connect into the East Rutherford sewer systems and discharge to the treatment plant a flow estimated at an average of 0.5 mgd consisting of an industrial waste which could not be handled and properly treated under present plant conditions.

(b) All three Boroughs have sewered areas between Route 17 and Berry's Creek which, as they develop, will cause an increase in plant flows.

(c) Development is restricted in the meadow areas of Carlstadt and East Rutherford south and east of Berry's Creek until sewers are provided in such areas, because high ground water conditions and clay subsoils make subsurface sewerage treatment unsatisfactory in the meadowlands. Upon installation of sewers, these additional flows, if discharged to the Joint Meeting plant, would produce even heavier loadings upon the treatment facilities.

Future Flows

In order to establish a program for sewerage facilities in the three municipalities, estimates have been made of the flows which might be expected under a First Stage program and for "ultimate" complete development. The First Stage Program would serve essentially all of the presently sewered areas, the developed and unsewered meadowland area in Carlstadt and a small amount of flow from

BCSA0076686

2800 acres, has been developed and sewered for a number of years. Of this sewered area, the western section, consisting of approximately 860 acres in Rutherford and East Rutherford, which drains normally to the Passaic River, is sewered to the system of the Passaic Valley Sewerage Commissioners, whereas, the eastern section is sewered to the Joint Meeting treatment plant located in Rutherford. The eastern "meadowland" area of approximately 3900 acres in the three Boroughs is located mostly in East Rutherford and Carlstadt, and has remained undeveloped for many years. However, in the past few years it has been undergoing rapid development primarily of an industrial nature.

The Joint Meeting of Rutherford, East Rutherford and Carlstadt was established in 1938 for the purpose of collecting and treating the sewage from the western section of the three Boroughs in the Hackensack River drainage area west of Route 17. Under the auspices of the Joint Meeting, the present sewage treatment plant, which is a standard rate trickling filter plant with provision for chemical treatment, was constructed between 1939 and 1941 with a design capacity of 4.0 mgd (million gallons per day). A more detailed description of the plant is given later in this report and in Appendix A.

Field Investigations

For the purposes of this report, studies and field investigations were made to determine recent flows and plant loadings, the condition of the existing sewage treatment plant and the status of development in unsewered portions of the meadowland areas. A review was made of all available maps and data and elevations were obtained where required for the study. In addition, in the present rapidly developing industrial area of Carlstadt, a field survey was made of the industries presently in operation in the area, and meetings

BCSA0076725

ATTACHMENT 23

BERGEN COUNTY SEWER AUTHORITY

JOINT MEETING EXTENSION

FACILITY PLAN

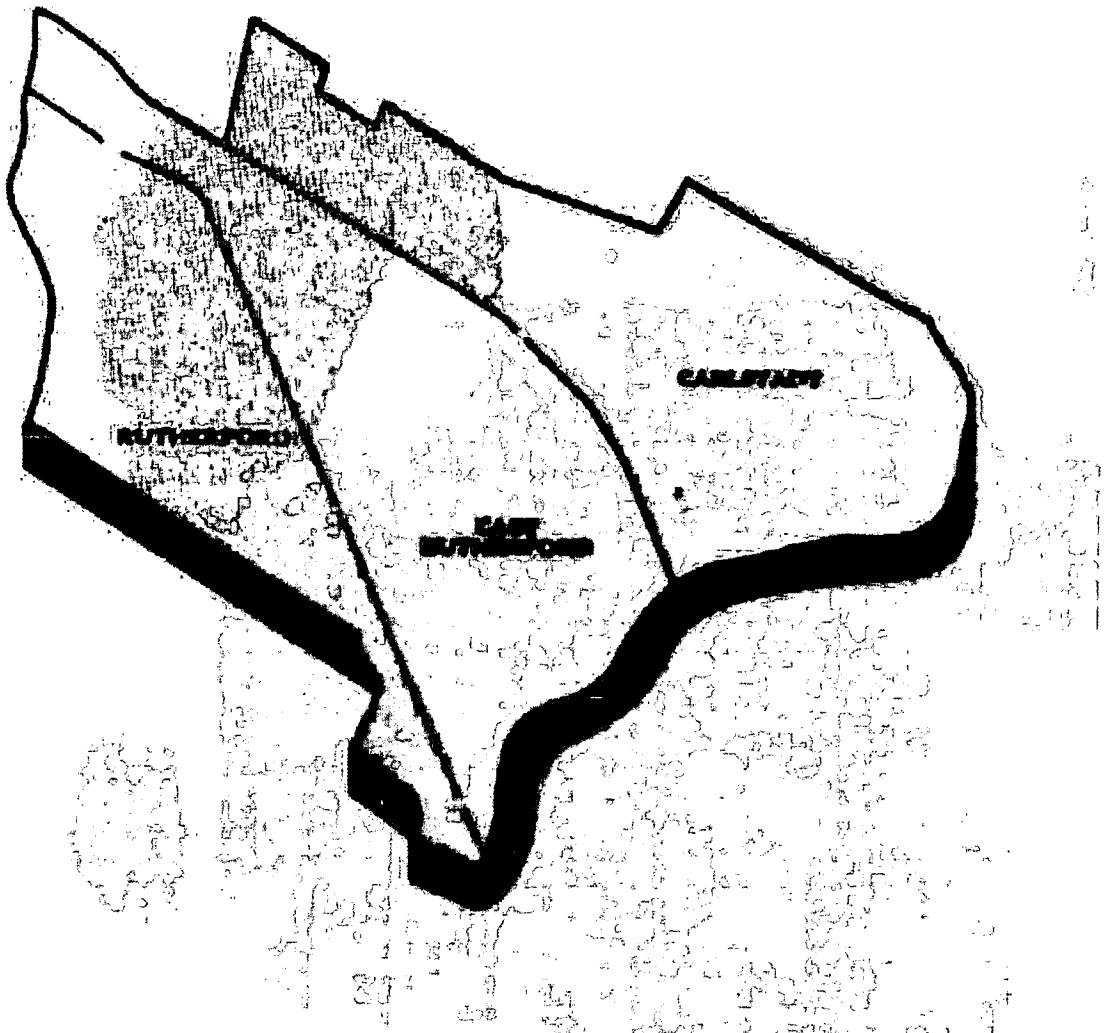

CLINTON BOGERT ASSOCIATES
CONSULTING ENGINEERS

MAY, 1977

BCSA0076323

BERGEN COUNTY SEWER AUTHORITY

JOINT MEETING EXTENSION

FACILITY PLAN

RICHARD F. KILLEEN, Chairman

ANDREW VACCARO, Vice Chairman
DOMINIC CASAMASSINA
JOHN CURRAN

FRANK C. LONGO
CHARLES PORSCHEN
J. DONALD WASSERMAN

• • •

JOHN G. COSTELLO, Executive Director
JOSEPH CIPOLLA, Secretary
ROBERT J. MURPHY, Treasurer

• • •

STEPHEN J. MOSES, ESQ.
Counsel

JOHN J. ECCLESTON
Auditor

PROPERTY OF
ENGINEERING DEPARTMENT
B. C. U. A.

DRAFT

CLINTON BOGERT ASSOCIATES
CONSULTING ENGINEERS

MAY, 1977

BCSA0076324

CLINTON BOGERT ASSOCIATES

PARTNERS
IVAN L. BOGERT
HERBERT L. KAUFMAN

PRINCIPAL ASSOCIATES
WAYNE EAKINS
JOHN H. SCARINO

ASSOCIATES
JOHANNES DEWAAL
FRANCIS J. DOBROWOLSKI
IGNAZ ROTTENBUCHER
DANIEL S. GREENE
HERBERT LANDESMAN
UMBERTO A. MILLETARI
WILLIAM WHEELER

CONSULTING ENGINEERS

2125 CENTER AVENUE • FORT LEE, NEW JERSEY 07024
(201) 944-1676 • CABLE: BOGERTENG FORTLEENJ

May 31, 1977

Bergen County Sewer Authority
Post Office Box 122
Little Ferry, New Jersey 07643

Re: Joint Meeting Extension
Facility Plan

Gentlemen:

In accordance with the terms of our contract dated January 29, 1974 and in compliance with U.S. Environmental Protection Agency Rules and Regulations, we are transmitting herewith a draft copy of the Joint Meeting Extension Facility Plan.

Conclusions and recommendations indicating the need to proceed with the final design and construction of the proposed Pumping Station and force main are on Pages 2-4.

Respectfully submitted,

CLINTON BOGERT ASSOCIATES

By: Ivan L. Bogert
Ivan L. Bogert
P.E., N.J. Lic. No. 6341

ILB/DHH:az
Encl.

1.0 Summary, Conclusions and Recommendations

1.1 Summary

The Joint Meeting (JM) sewage treatment plant which serves portions of the Boroughs of Rutherford, East Rutherford and Carlstadt has been discharging an unsatisfactory effluent for many years. Based on reports, issued by the JM in 1966 and by the Bergen County Sewer Authority (BCSA) in 1971 and 1973, the State and Federal authorities concurred that the BCSA should construct a pumping station and force main, to transfer the JM flow to the BCSA system. The current National Pollution Discharge Elimination System (NPDES) permit for the JM plant requires the permittee to discontinue operation by connecting to the regional BCSA system.

This Facilities Plan discusses the natural, utility, and demographic systems which may affect, or be affected by, the recommended project. The projection of increasing flows, from the JM service area directly affects the project design. The report includes an Infiltration/Inflow analysis of the 46 miles of sewers tributary to the proposed JM pumping station.

Alternate schemes for treating and transporting sewage generated in the Joint Meeting area were considered. The report identifies the environmental, organizational, economic or legal factors which led to the preferred alternate selection. Preliminary design and layout of the recommended pump station and force main are presented. The project costs, method of financing, and schedule of implementation are also developed.

4.2.42 Average Industrial Flow - The industrial sewage in 1974 averaged 0.78 mgd. Approximately 60 percent of this flow or 0.45 mgd, originated from these 13 industries, all of which discharge more than 10,000 gpd:

Company	Discharge (1000 gpd)	Municipality
1. Arcynco, Inc.	120	Carlstadt
2. RJR Archer	66	Carlstadt
3. Ganes Chemical Co.	56	Carlstadt
4. General Printing Ink Co.	35	E. Rutherford
5. Diamond Shamrock Chem.	30	Carlstadt
6. Brevel Motors Corp.	24	Carlstadt
7. Catalyst Development Corp	23	Carlstadt
8. A & M Electroplating	20	Carlstadt
9. Town Offset	19	Carlstadt
10. Aluminum Anodizing	14	Carlstadt
11. Bell Container Corp.	14	E. Rutherford
12. Insulfab Plastics Inc.	13	E. Rutherford
13. Howmedica, Inc.	12	Rutherford
	446	

The remaining 0.33 mgd originated from the additional 250 industries in the service area.

Plate 8 indicates the industrial flow from each mini-system. The majority of the industrial flow originates in the areas east of Route 17, along Carlstadt's western boundary, and along the Erie-Lackawanna Railroad at the Rutherford-East Rutherford boundary.

4.2.43 Peak Flow - Peaks of both domestic and industrial flows were estimated to be 1.5 times the average base flow. These estimates are based on the analysis of the

BCSA0076366

4.3 INFILTRATION/INFLOW ANALYSIS

4.3.1 Purpose and Scope

Section 201 of the 1972 Water Pollution Control Act Amendments and Section 35.927 of the Rules and Regulations of the EPA requires an Infiltration/Inflow (I/I) analysis for projects requesting Federal Grant monies. A subsequent staged Sewer System Evaluation Survey (SSES) is required if the analysis demonstrates that the sewers admit excessive Infiltration/Inflow. Excessive Infiltration /Inflow is that portion which a cost-effectiveness analysis determines as more economical to eliminate from the system than to transport and treat.

The analysis presented as Section 4.3 of the Facilities Plan discusses the tributary sewer system, extraneous flows, field investigations, the cost-effectiveness analysis and the recommended programs. Some supportive data which is usually incorporated into an independent I/I analysis is included in Sections 4.1, 4.2 and 5.0.. Other supportive data is included in the I/I analysis for the BCSA system.

4.3.2 Sewer System

4.3.21 Development - Most of the sanitary sewers in the Joint Meeting service area were constructed around 1910 by the Boroughs of Rutherford, East Rutherford and Carlstadt. Between 1910 and 1940, sewage from the three municipal sanitary sewer systems discharged to Berry's Creek after passing through rudimentary municipal sewage treatment plants. The treatment provided by these facilities was

inadequate to prevent increased pollution of Berry's Creek and the Hackensack River. The pollution was compounded by the tidal action in these waterways which retards the downstream travel of the sewage pollutants.

In 1936 the State Department of Health adopted a resolution requiring secondary treatment for all sewage discharged to the Hackensack River and its tributaries. To comply with this ruling the three Boroughs decided that a single sewage treatment plant would be most feasible. Accordingly in 1938, Rutherford, East Rutherford and Carlstadt created the "Joint Meeting" empowered to construct, operate, maintain and finance a single secondary treatment plant and the trunk sewers necessary to convey sewage from the municipal systems to the plant. The Joint Meeting Treatment Plant in Rutherford and the trunk sewers were constructed as PWA projects (N.J. 1400F Contracts 1 and 2) in 1939 and 1940.

4.3.22 Description

Sewer Lengths - There are presently 46 miles of gravity sewers, excluding house connections, tributary to the Joint Meeting plant. Approximately 43.9 miles were constructed by the municipalities. The remaining 2.1 miles were constructed by the Joint Meeting. This is the sewer length distribution by municipality:

		Municipal Sewers (miles)	Joint Meeting Sewers (miles)	Total (miles)
1.	Carlstadt	12.6	0.9	13.5

(Cont'd)

BCSA0076371

Joint Meeting

1. Engineer

Rutherford - Vent and pick holes in the manhole covers admit inflow to the sanitary system in areas which flood during heavy rainfall or high tides. Such flooding was reported on Veteran's Boulevard and on Erie Avenue east of Chestnut Street. Possible storm connections to the sanitary system along Orient Way and at other unspecific locations may also contribute inflow. Other inflow sources include air conditioners, sump pumps and drains for roofs, yards, foundations and cellars, which may be connected to the sanitary system. The interviewed officials were not aware of the exact location of any of these sources.

In the preliminary investigations for night metering our field technicians discovered a cross connection between the storm and sanitary sewers on Erie Avenue at Chestnut Street. This cross connection apparently functions as an inflow source since the Superintendent for the D.P.W. reported that heavy rainfall surcharges the storm sewers in this area. The pressure from the surcharging occasionally lifts storm manhole covers off their rims.

Sewers in areas with a high groundwater table may contribute excessive infiltration. Reported areas with high groundwater include the swampy meadowlands, underlain by springs east of Route 17 and Springdell Avenue.

Root intrusion into the house connections along with buildups of grease and rags have caused basement backups on Orient Way near Winslow place. The root intrusion may indicate excessive infiltration.

East Rutherford - Flooding during heavy rainfall was reported on Paterson Avenue at Hoboken Avenue and on Hackensack Street at the railroad crossing. As previously mentioned, street flooding contributes inflow to the sanitary system. Specific inflow sources within the borough such as storm system cross connections, sump pumps or illegal drain connections were not reported. High groundwater east of Route 17 and springs throughout the borough indicate areas which may contribute excessive infiltration.

Carlstadt - These areas subject to flooding during extremely high tides or heavy rainfall, may contribute inflow to the Carlstadt system:

1. Broad Street between Thirteenth and Fourteenth Streets
2. Hoboken Road at Tenth and Broad Streets
3. The general area east of Route 17

Illegal drainage connections (roof, area, foundation and cellar drains) were reported on Eighth Street north of Marsan Drive. Drains may connect to the sanitary system in other areas, however, specific locations were not reported.

The area between Route 17 and Berry's Creek lies within the Hackensack Meadowlands. Excessive infiltration caused by high groundwater may occur in this section of the system. Root intrusion into the system, another indicator of excessive infiltration, was reported on Tenth Street near Division Street, and on Sixth Street between Berry Avenue and Broad Street.

4.3.25 Maintenance Program - The three servi

BCSA0076378

sewers is included in the amount assessed for this miscellaneous category.

2. Reduction of Bypassing - The amount of sewage bypassed during extreme storms will be reduced by the program of extraneous flow removal. The increased water quality due to the reduced bypassing has a substantial environmental benefit. Large tangible benefits from this program would be incurred from reducing the peak should storage or treatment of the extreme peaks be required. Additional savings would be incurred by lessening the extent of the cleanup of sewage floatables and solids deposited on the river banks.

3. Reduced Sewage Flooding - During peak inflow and infiltration periods, sewers without emergency overflows surcharge to levels which can flood streets, basements, and sewer system structures. The disadvantages of such flooding are fairly obvious. Street and yard flooding creates an unhealthy condition during the duration of the flooding and requires a substantial cleanup and disinfection effort after each occurrence. In addition to the disadvantage associated with street flooding, sanitary sewage entering basements can destroy valued possessions of the residents along the route of a surcharged sewer. Within the sewer system, sewage solids are deposited on the bench and rungs of each manhole, junction chamber, and meter chamber along the surcharged section. Unless cleaned after each surcharge these solids create noxious conditions in those structures. Reducing the extraneous peak flow derives economic benefit by reducing the occurrence of such surcharging.

BCSA0076400

River into which the BCSA sewage treatment plant discharges as "Water Quality Limited" TW-2. In accordance with this classification, the current NPDES permit for the BCSA plant during construction, requires a minimum of 75 percent removal of the influent BOD, and suspended solids over a 30 day period. The permit also specifies a maximum effluent BOD and suspended solids level of no more than 75 ppm over a seven day period and no more than 50 ppm over a 30 day period. These limits will be tightened when the expansion is completed.

Because the Hackensack River is designated "Water Quality Limited" the BCSA plant may soon need to provide better than secondary treatment. In Special Grant Conditions established by the EPA for the current plant, expansion commits the Authority to prepare a facility plan detailing alternate methods of obtaining the specified water quality.

The present ocean dumping permit for the plant requires complete digestion of all primary and secondary sludge barged to the Atlantic dumping area. In addition, the permit directs the Authority to prepare a facility plan recommending the most cost-effective method of sludge disposal in anticipation of a ban on ocean dumping.

4.4.2 Joint Meeting Treatment Plant

Since its construction in 1940, the plant has performed inadequately. The inadequate treatment results mainly from operating and maintenance problems. Treatment units which malfunctioned were removed and not repaired. The mechanical equipment has become obsolete. Presently, the trickling

filters often clog requiring the flow to be bypassed, improperly pretreated industrial wastes entering the filters has inhibited biological growth on the filter stones. The sludge withdrawal system in the settling tank no longer functions and the tanks must be bypassed and dewatered to remove the sludge. The two-phase sludge digester serves mainly as a holding and dewatering tank.

The sludge incineration facilities are inoperable and thickened sludge is pumped to a nearby lagoon. Operation of the coagulating tank equipment has been discontinued. A few years after construction, the magnetite filters clogged and this unit has been bypassed since that time. Additionally, sections of the plant administration building have developed structural cracks caused by support pile deterioration.

The JM plant now provides less than primary treatment, removing on the average only about 25 percent of the BOD and suspended solids from the influent sewage. Such treatment is not acceptable for discharges to Berry's Creek. Tests in 1972 revealed the waters of Berry's Creek to be anaerobic.

The Joint Meeting is presently under EPA and State orders to discontinue operation of the JM plant and to connect to the BCSA system. The three municipalities, Carlstadt, East Rutherford and Rutherford, have indicated they will comply with this directive. The Joint Meeting will determine the ultimate disposition of the abandoned plant facilities.

BCSA0076429

Year	Average Flow (mgd)*	Peak Flow (mgd)
1976	3.04	8.4
1980	3.83	10.0
1990	4.98	12.5
2000	6.13	15.0
2010	7.17	17.0
2020	7.36	17.5

*Excluding excessive infiltration

5.3.5 Non-Excessive Infiltration and Inflow - From the infiltration inflow analysis it was determined that the average infiltration rate was 1.30 mgd and the average inflow rate was 0.04 mgd. The preliminary cost-effectiveness analysis indicated 0.66 mgd of infiltration may be cost-effectively removed by a rehabilitation program. Cost-effective removal of inflow sources discovered during the physical inspection and smoke testing operations may remove 70 percent of the 0.040 mgd average inflow, or 0.028 mgd. Therefore average non-excessive infiltration may be 0.64 mgd, and non-excessive inflow maybe 0.012 mgd.

5.3.6 Flow Characteristics - Joint Meeting sewage contains a considerable amount of industrial discharge. Periodically, batches of industrial wastes received at the JM plant, have overloaded the plant units and upset the biological action within the trickling filters. The shock load effects from these wastes have reduced JM plant efficiency.

BCSA0076434

5.3.7 Sewage Overflows - The system tributary to the proposed JME is comprised entirely of separate sanitary sewers. There are no combined sewers. However, a storm-sanitary system interconnection was discovered during our preliminary field investigations, indicating the possibility of other such connections. The proposed inflow investigation should effectively detect any other cross-connections.

5.3.8 Possible Flow Reduction

5.3.81 Reduction of Industrial Flow - Flow from the service area will eventually be treated at the BCSA plant. Therefore, pretreatment requirements of the Authority will apply to the Joint Meeting industries. Industrial discharges may be sampled on a regular basis at the point of entry. If the wastes entering the system fail to meet discharge standards then pretreatment will be required. Discharge of uncontaminated cooling water to the system is also prohibited.

Carlstadt, East Rutherford and Rutherford intend to implement an industrial waste regulation and an equitable cost recovery regulation which will meet EPA requirements. This program will be developed and coordinated in conjunction with the BCSA program.

As discussed in section 4.2.42, most of the industries in the service area discharge small quanti

BCSA0076435

instructing the JM to join the the BCSA would have to be reversed. Such implementation difficulties would certainly delay the abandonment of the JM plant.

An evaluation of environmental issues also weighs against the PVSC transfer. Primary adverse impacts caused by construction of the needed connecting sewers, although temporary would be greater because the construction would occur through a more densely developed area. Adding the JM flow to the PVSC trunk would raise the hydraulic profile in that sewer. Since the trunk intercepts combined sewer systems the quantity of combined sewage bypassed to the Passaic River would increase because of the lost trunk capacity used to convey JM flow. The interbasin transfer of JM flow would cause another adverse impact. Effluent from the BCSA Plant discharges to the tidal Hackensack River twelve miles above the outlet. The effluent of the PVSC Plant discharges to Upper New York Bay. Removal of the JM effluent would decrease the flow in the lower Hackensack River. This would result in slightly longer detention time of pollutants, more saltwater intrusion and slightly lower average river water levels available to recharge aquifers.

6.3 Upgrading the JM Plant

6.3.1 Background - The 1966 JM Preliminary Report on Sewerage Facilities considered five alternate schemes for sewering the JM area and the eastern portion and East Rutherford. The schemes included combinations of

BCSA0076444

treating portions of this flow (1) at the BCSA plant (2) at an upgraded JM Plant (3) at a new plant on the Hackensack River. During the late 1960's and early 1970's the eastern portions of Carlstadt and East Rutherford were sewered with the discharges pumped to the BCSA Hasbrouck Heights Trunk Sewer. Thus, several alternates presented in the 1966 report including the Hackensack River Plant, are no longer valid.

However the analysis of the two basic alternates for serving the JM area, (1) at the BCSA Plant (2) at an upgraded JM Plant, remains valid. The report recommended, the Joint Meeting should not upgrade the JM Plant unless large federal grants were available for the purpose of upgrading. Otherwise the JM area should be sewered to the BCSA plant. This conclusion was based mainly on economic considerations. The report demonstrated that upgrading would be the more expensive alternative. Based on this and subsequent analyses, the court ordered the JM to connect to the BCSA system.

These issues were evaluated in recommending the alternative of transfer to the BCSA over upgrading the existing plant:

1. Berry's Creek-Hackensack River water quality
2. Reliability
3. Sludge Disposal
4. Construction Impacts
5. Construction Costs
6. Operating and Maintenance Cost
7. Implementation

6.3.2 Berry's Creek - Hackensack River Water Quality - As mentioned in Section 4.1.4 the water quality in Berry's Creek is presently so poor that at times of the year the stream is anaerobic. The streams poor quality is mainly due to the poor operation of the JM plant. Upgrading the JM plant would reduce the unsatisfactorily high BOD and SS load discharged to Berry's Creek, and raise the dissolved oxygen level. However the effluent from an upgraded JM plant would result in higher concentration of BOD, SS, phosphorous organic nitrogen and heavy metals, (and lower dissolved oxygen) in Berry's Creek than would result if the effluent were eliminated. When the JM effluent is removed, the only treated sewage discharged to Berry's Creek will be from the 0.7 mgd Wood-Ridge municipal plant.

The benefit of upgraded Berry's Creek quality will be somewhat balanced by the slight lowering of the Hackensack River quality between the BCSA plant outfall and Berry's Creek. The lowering of the Hackensack River quality will be much less than the increase of Berry's Creek quality because of the much larger base flow in the Hackensack River and the better quality effluent produced by the BCSA plant.

The beneficial effect of higher Berry's Creek quality will be somewhat offset by the disadvantage of lower flows. Average Berry's Creek flow would be reduced about 30 percent. This lower flow will result in longer pollutant resident time, slightly increased salt water intrusion and

slightly lower creek levels available to recharge aquifiers. These disadvantages will be somewhat offset by the beneficial effect of higher flow rates in the section of the Hackensack River between the BCSA Plant and Berry's Creek.

6.3.3 Reliability - Many JM industries discharge process wastes. In the past these wastes have caused plant operating difficulties. The smaller the treatment plant the more vulnerable the biological processes are to upset by industrial shock load. The BCSA plant currently treats large quantities of industrial wastes, and the plant processes were designed to accomodate these wastes. Therefore the reliability of treatment would be greater at the larger BCSA plant than at a smaller upgraded JM plant. To achieve the same degree of reliability at the JM plant a more stringent monitoring of industrial discharge would be necessary.

6.3.4 Sludge Disposal - The JM plant was constructed with digestion, vacuum filtration, and incineration units for sludge disposal. Currently the raw sludge is lagooned because all sludge disposal facilities are in disrepair. If the JM plant were upgraded, the sludge disposal facilities would have to be repaired and upgraded, or another means of disposal implemented. Regional sludge disposal at the BCSA plant appears to be a more economically and environmentally sound alternative. The quantity of sludge originating from the Joint Meeting sewage is small in compaBCSA0076447 amounts currently processed at the BCSA plant.

As discussed in Section 6.3.2, JM plant abandonment will have several beneficial impacts on water quality. BOD, organic nitrogen, phosphorus, COD and heavy metal loadings in Berry's Creek will be reduced when the treatment plant discharge is eliminated. This will improve water quality in Berry's Creek. Termination of sludge lagooning at the plant site will prevent further pollution of groundwater supplies. Leachate from the lagoons will be reduced after the lagoons have stabilized.

The adverse impact on the Hackensack River caused by additional discharges from the BCSA plant is minor since the additional flow from Joint Meeting is small in comparison with the flow presently treated at the BCSA plant. Discharging the JM flows to the Hackensack River is beneficial in that it will increase flow and reaeration rates, aid in dispersion of pollutants, prevent salt water intrusion, and recharge groundwater supplies downstream.

Alleviation of Public Health Problems - The selected plan will reduce public health problems by replacing a source of river and soil pollution by conveying the sewage from the JM area to an environmentally sound regional treatment plant.

Industrial and Residential Relocation - The selected plan will not cause relocation of any industries, residences or roadways. It may allow the development of the site of the abandoned JM plant.

BCSA0076466

10.0 Summary of Environmental Considerations

The proposed pumping station and force main which will convey Joint Meeting flows to the BCSA system for treatment represents the most environmentally sound alternative. Construction of the proposed facility will eliminate most of the pollutant loading to Berry's Creek and consequently improve the water quality. Present sludge lagooning procedures will cease and impacts to the local ecosystem will decrease. As the sludge stabilizes in these lagoons the public health hazard will diminish. By constructing the pumping station on the existing plant site and the force main along existing roadways and rights of way the adverse primary impacts will be minimized and temporary. The Joint Meeting Extension does not disturb any historically, archaeologically or environmentally significant areas. Since the area is zoned for light industry and sports complex by the HMDC, the overall environmental sensitivity is limited.

In the design of the East Rutherford Extension force main, the BCSA provided for future expansion of the system by providing sufficient capacity to convey the Joint Meeting flow. A JME connection point was included on Gotham Parkway in the construction of the BCSA ERE force main. There will be limited other impacts on the existing BCSA system.

The proposed project has certain adverse primary impacts which are temporary in nature. ConstBCSA0076498
Berry's Creek Crossing will disturb the waterway and local

ATTACHMENT 24

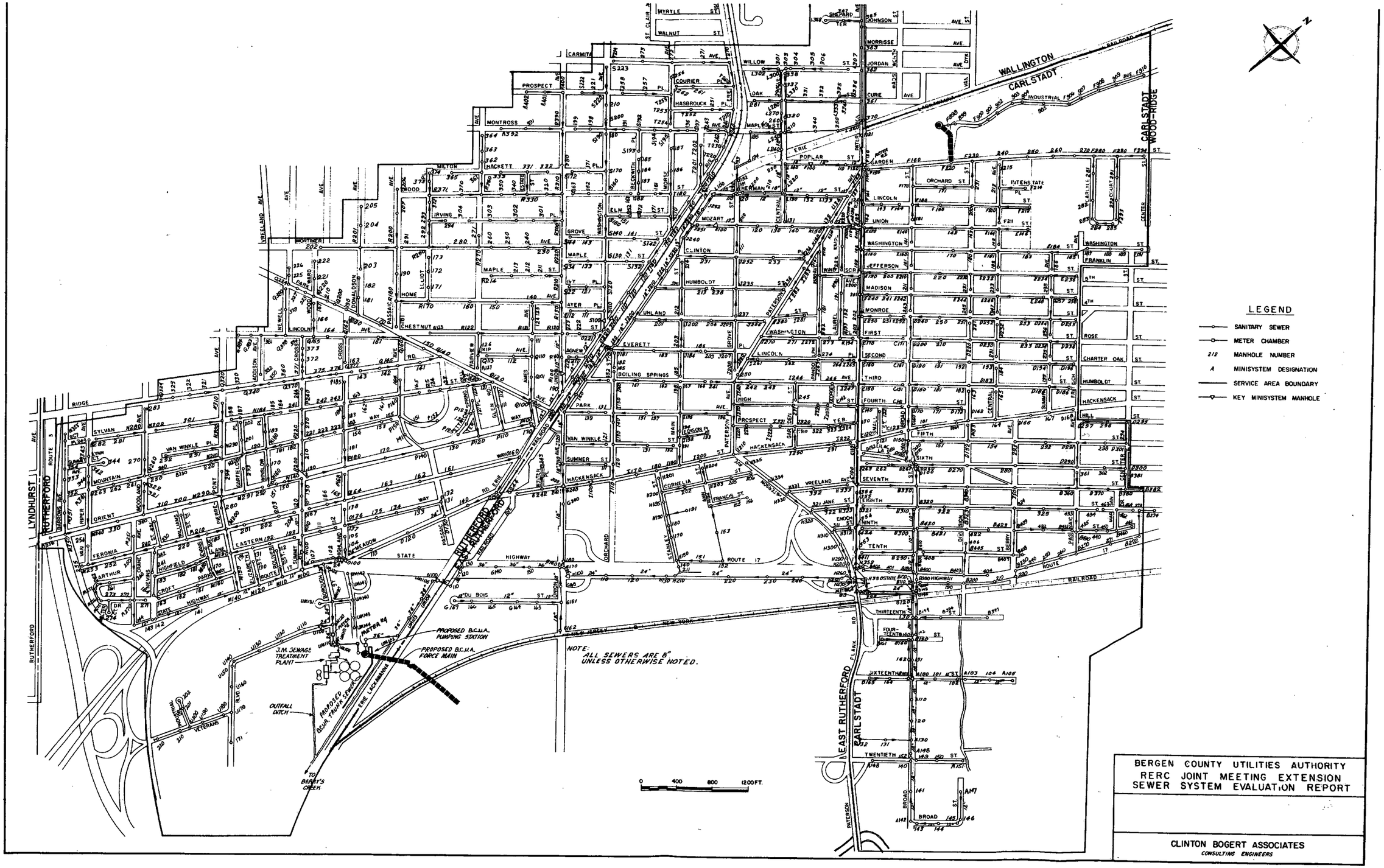

Same for Plate 2 & 3

BCSA007397

ATTACHMENT 25

Hasbrouck Heights
West Riser Ditch
Teterboro
East Riser Ditch
Wood-Ridge
Rutherford, East Rutherford, Carlstadt Joint Meeting POTW
Eight Day Swamp
Ackerman's Creek
Peach Island Creek
Carlstadt
Rutherford
Walden Swamp
Berry's Creek
East Rutherford
Berry's Creek
Oritani Marsh
Fish Creek
Berry's Creek Marsh
Map 3
Berry's Creek Study Area
Rutherford, East Rutherford, Carlstadt Joint Meeting POTW
Updated as of 11/21/2007
N
Miles
0.5 0.25 0 0.5

ATTACHMENT 26

MULTIPLE PERMIT APPLICATION

for the

HMDC/EnCap Golf, Inc.
Brownfield Redevelopment Project
Bergen County, New Jersey

prepared for:

EnCap golf
Tampa, Florida

October, 2000

Prepared by:

IT CORPORATION

IT Project 806436

BCSA0127600

IT Corporation
200 Horizon Center Boulevard
Trenton, NJ 08691-1904
Tel. 609.584.8900
Fax. 609.588.6300

A Member of The IT Group

October 5, 2000

Mr. Richard DeWan
New Jersey Department of Environmental Protection
Site Remediation Program
Office of Dredging & Sediment Technology
P.O. Box 028
401 E. State Street
Trenton, NJ 08625-0028

RE: Multiple Permit Application
Brownfield Redevelopment Project
Bergen County, New Jersey

Dear Mr. Dewan:

This letter transmits six copies of the Multiple Permit Application for the Brownfield Redevelopment Project, Bergen County, New Jersey. This document is submitted on the behalf of EnCap Golf, LLC of Tampa, Florida and the Hackensack Meadowlands Development Commission (HMDC).

The Kingsland Landfill Closure Plan, Appendix O, is not provided with the application. The closure plan will be provided under separate cover to those parties who request it.

If you have any questions or require clarification on the content of the enclosed application, please contact me at (609) 588-6452.

Sincerely,
IT CORPORATION

Jack Koczan
Principal

Cc: Project File
J. Cappola-Decotiis, Fitzpatrick, & Gluck (10 copies)

MULTI-PERMIT APPLICATION
WATERFRONT DEVELOPMENT, WATER QUALITY CERTIFICATION, COASTAL ZONE CONSISTENCY, AND STREAM ENCROACHMENT

TABLE OF CONTENTS

		PAGE
1.0	**INTRODUCTION**	1
2.0	**PROJECT LOCATION AND DESCRIPTION**	2
2.1	Project Location	2
2.2	Infrastructure Description	2
2.3	Landfill Remediation/Closure	4
2.4	Post-Remediation Land-Use	5
3.0	**SEDIMENT SAMPLING AND TESTING**	6
3.1	Objectives and Scope Of Work	6
3.2	Sampling Program Objectives	6
3.3	Sample Types and Overall Scope Of Work	7
4.0	**PROPERTY OWNERSHIP ISSUES**	9
4.1	Dredging	9
4.2	Disposal	10
5.0	**ENVIRONMENTAL ASSESSMENT**	10
5.1	Existing Conditions	10
5.2	Environmental Effects of the Proposed Project	12
6.0	**COMPLIANCE WITH COASTAL ZONE MANAGEMENT**	17

APPENDICES

APPENDIX A	Site Location Maps and Data
APPENDIX B	Project Site Bathymetry
APPENDIX C	Sediment Sampling Plans
APPENDIX D	Raw Sediment Data
APPENDIX E	Red Clay AUD Data
APPENDIX F	Processed Sediment Beneficial Reuse AUD Data
APPENDIX G	Local Permits and Approvals
APPENDIX H	Tideland Application
APPENDIX I	Property Ownership and Notification Documentation
APPENDIX J	Compliance with Relevant Coastal Zone Management Rules
APPENDIX K	LURP Application
APPENDIX L	Permit Identification Form
APPENDIX M	Photos of Project Area
APPENDIX N	Wetland Impact Maps
APPENDIX O	Kingsland Closure Plan
APPENDIX P	Conceptual Mitigation Plan

1.0 INTRODUCTION

The Hackensack Meadowlands Development Commission ("HMDC") and EnCap Golf, LLC are undertaking a Brownfield redevelopment project that involves the remediation of three orphan landfills within the Hackensack Meadowlands District ("HMD"). The three orphan landfills are the Lyndhurst, Rutherford and Avon landfills (the "Site"), which are located in the Township of Lyndhurst and the Borough of Rutherford. In addition, it is planned that the Kingsland Park landfill will be included in the project. This landfill would be closed in accordance with the New Jersey Department of Environmental Protection ("NJDEP") approved closure/post-closure plan. Following the remediation of the landfills, the Site will be redeveloped into a 27-36 hole golf complex. HMDC is currently acquiring the necessary parcels through friendly negotiations and if necessary will condemn parcels through their Eminent Domain authority.

To facilitate the remediation of the landfills and the transport of capping material it will be necessary to dredge a mooring area in the Hackensack River and Berry's Creek and construct a bulkhead and a dredged material processing facility. In addition, a series of roads and bridges will be constructed across these landfills in order to transport capping material.

It is proposed that the remediation of the Site will be accomplished through the beneficial use of dredged sediment. The sediment would be stabilized at the proposed processing facility and engineered to comply with the New Jersey Department of Environmental Protection's ("NJDEP") technical specifications for environmental and geotechnical standards as a landfill cap. In accordance with the Memorandum of Agreement entered into between the NJDEP and EnCap Golf LLC, the site will be remediated in accordance with the appropriate NJDEP regulations. In addition, the Remedial Action Workplan will be consistent with the required NJDEP placement criteria for processed dredged material. It is also anticipated that beneficial use of dredged clay will be used as capping material to remediate the site. Further, alternative materials will also be used for grade changing in conjunction with the capping of the site.

The proposed project requires State of New Jersey permits including:

- Waterfront Development Permit;
- Stream Encroachment Permit;
- State Water Quality Certificate; and
- Tideland Instrument.

This document provides data and environmental analysis required for the State of New Jersey to determine if these permits are to be issued.

Federal permits under Section 404 of the Clean Water Act and Section 10 of the Rivers and Harbors Act of 1899 were applied for in a separate application submitted to the US Army Corps of Engineers on April 5, 2000. A public hearing on the application was held on May 26, 2000. A supplemental public notice was issued on August 14, 2000.

Additional permits related to the operation of the processing facility under the Clean Air Act New Source Review, point and non-point discharges of dewatering effluent, and landfill disruptions will be addressed in separate permit submittals.

BCSA0127603

2.0 PROJECT LOCATION AND DESCRIPTION

2.1 PROJECT LOCATION

The proposed project site is located in the Township of Lyndhurst, Borough of Rutherford, and Town of North Arlington as shown in Figure 1. The project site encompasses approximately 752 acres. A breakdown of project acreage by filled area and wetlands/open water is provided in Table 1.

Table 1
Project Site Area Summary
(in acres)

Location	Upland Area	Tidal Wetlands	Non-Tidal Wetlands	Totals
Avon Landfill	114	3.8	0.3	118
Lyndhurst Landfill	131	21.7	0	153
Rutherford Landfill	93	191.8	1.4	286
Total Orphan Landfills	338	217.3	1.7	557
Kingsland Landfill	186	0	9	195
Total Project Area	524	217.3	10.7	752

Notes:

- Project acreages have been developed using a combination of information obtained from municipal tax records, HMDC GIS database, and property surveys.
- The Avon Landfill acreage includes approximately 14 acres owned by the City of Jersey City and 8.8 acres owned by NJ Transit which will require temporary or permanent easements for a portion of the properties.
- The Lyndhurst Landfill acreage includes approximately 3.2 acres covered by Valley Brook Avenue.
- The Lyndhurst Landfill acreage does not include approximately 36.5 acres owned by Buckley Broadcasting and 15.3 acres owned by F. Viola. Both properties are currently occupied by radio towers.
- Avon, Lyndhurst and Rutherford Landfill acreages include a 60 feet wide easement for the Williams (Transcontinental) gas pipelines.
- Kingsland Landfill acreage includes portions of Williams and PSE&G gas rights of way, HMDC administrative and park office complex, and NJ Transit properties which may be excluded from areas available for development.
- Kingsland wetland delineation has not been completed. Therefore, an estimated 9 acres of non-tidal wetland has been included in the acreage computation based on secondary source information alone.

2.2 IMPROVEMENTS DESCRIPTION

To facilitate the remediation of the Site, 4-6 million cubic yards of material will be needed for grade changing purposes and as capping material. It is anticipated that the majority of the material will be transported to the Site by barge, which will necessitate the dredging of an access channel and construction of a bulkhead offloading facility and haul roads. The design includes the installation of approximately 180 feet of heavy duty PZ22 steel "Z" sheathing along the west bank of the Hackensack River and approximately 180 feet of the same running west along the north bank of Berry's Creek to accommodate the mooring of two Clyde 24 foot, 80 ton, barge mounted tub cranes, or their equals, as shown in Figure 3. The bulkhead details are shown in Figure 4.

A "dolphin wall bulkhead" will be used to position and "slide" the dredge scows as the Clyde 24s reposition the barges via their deck winches. It is currently envisioned that the dolphins will be 50' in length and 24" in diameter. The thickness of the dolphins will be Schedule 40 steel pipe filled with concrete. Approximately 12 of the

BCSA0127604

dolphins are to be constructed with appropriate concrete set anchors in order to accommodate 6" mooring bollards.

In order to facilitate the reposition of full or light (empty) scows in and out of the material off-loading area, a temporary scow mooring area is envisioned 575 feet water ward of the west bank of the Hackensack River beyond the main channel and about 300 feet downstream of the railroad tressel. A Stake Boat, 330' x 40' will be used as a floating mooring dock. Four (4) additional dolphins, similar in the above stated specification, will be set for the Stake Boating mooring (See Figure 3).

Following installation of the bulkhead, dredging will be performed in the Hackensack River and Berry's Creek as shown in Figures 5 and 6. The dredging will provide a 14-foot depth at Mean Low Water (MLW) to allow sufficient depth for the dredge scows to dock. The dredging will be performed using environmental cable-arm or watertight clamshell equipment. The proposed area of dredging is shown on the attached Figures 5 and 6. Representative cross-sections are shown on Figure 6. Approximately 43,000 cubic yards of material will be dredged – 25,000 cubic yards from the Hackensack River and 18,000 cubic yards from Berry's Creek. Based on field studies conducted in March 2000, approximately 28,000 cubic yards of the 43,000 total will be clay. The 15,000 cubic yards of dredged sediments will be used as ground cover at HMDC's 1-E landfill. The clay will be placed upland as structural fill for various construction activities. Dredging activities will be confined to the appropriate dredging time period designated for anadromous fish areas.

The haul road routing options for transportation of fill material were analyzed and it was determined that there are four potential options shown on the attached Figure 8. The haul road alignments, as well as bridge locations, have been selected to minimize impacts on wetland areas. In addition, a Bailey bridge design (Figure 9), which requires minimal structural support, is proposed to limit habitat disruption. Detailed wetland mapping, based on delineation performed in January and February 2000 are shown in the enclosed March 2000 Wetland Delineation Report. Interim stockpile locations will be determined during remedial planning for the landfills. Further, these interim stockpile locations will not impact wetlands.

The proposed processing facility includes two 1000 tons per hour (TPH) rotary trommel screens for course debris and material scalping followed by two 400 TPH RapidMix pugmills capable of processing 14,000 cubic yards per day of sediment. The processed sediments would be used for grading and capping the Site in support of the Remedial Action Workplan ("RAW").

The proposed offloading and processing facility will be capable of receiving and processing 7,000-14,000 cubic yards of dredged material per day. This processing facility will be capable of handling a maximum amount of 14,000 cubic yards of dredged sediment and a maximum amount of 9,000 cubic yards of dredged clay per day. The facility will receive material from local dredging projects. Prior to receiving a portion of this material, it will be necessary to: preliminary grade, construct a road network, and place temporary bridges to facilitate transportation of the dredged materials to the landfills.

The proposed Brownfields remediation redevelopment effort involves several phases of development encompassing a large area of land in the Hackensack Meadowlands District (HMD). The Brownfields remediation redevelopment project is being performed pursuant to the Memorandum of Agreement ("MOA") between NJDEP and EnCap.

Currently, it is planned that the Site will be remediated and redeveloped pursuant to the Brownfields and Contaminated Site Remediation Act (N.J.S.A. 58:10B-1 et. seq.). The remedial/closure approach was developed in accordance with New Jersey Department of Environmental Protection (NJDEP) Division of Solid and Hazardous Waste (DSHW) and Site Remediation Program (SRP).

The capping system will be structured, from bottom to top, as follows:

- Passive Gas Venting System: perforated gas collection pipes buried in the solid waste extending across the landfill;
- Grading and Shaping Layer: low permeability clay, processed dredge material (PDM), or other approved material used as subgrade;
- Soil Barrier Layer: a minimum of 12 inches of low permeability material (most likely clay or PDM from area dredging projects);
- Drainage Layer: Six inches of granular material or a geosynthetic drainage layer to minimize head on the barrier layer; and
- Vegetative Support Layer: a soil vegetative support layer including subsoil and topsoil layers with a minimum combined thickness of 18 inches of which at least four inches will be topsoil.

The capping system will be constructed in part by beneficially using dredged material originating from area navigational channel deepening projects and other approved material for grading and shaping the capping system. Two types of dredged material may be used: a low permeability clay and processed sediment. Both of these materials will be obtained through harbor deepening contracts. Other materials that have historically been approved by NJDEP for beneficial use may also be used for shaping, grading and drainage purposes.

As part of the overall remedy, institutional controls, including a Deed Notice and Classification Exception Area (CEA), will be implemented to restrict use of groundwater at the site.

The proposed remedial action will limit potential direct contact risks, limit exposure pathways and risk associated with discharge of leachate to adjacent surface water bodies. Specifically, the proposed remedial action includes the construction of a low permeability cap on the landfills that will:

- Prevent direct contact between the landfill waste and potential human and ecological receptors;
- Limit infiltration of precipitation through the landfill waste;

BCSA0127606

- Reduce the development of landfill leachate (groundwater in contact with landfill waste); and

- Reduce the discharge of leachate-impacted groundwater (and contaminant mass) to surface water.

- Facilitate the end use development with appropriate grading

The proposed remedial actions would result in water quality improvement in the Hackensack River, Berry's Creek, other local tributaries of the Hackensack River and the estuary as a whole. Currently, leachate produced in the landfills is adversely impacting water quality. Estimates of leachate production are approximately 100,000 to 140,000 gallons per day for the Avon Landfill, which represents 100 acres of the 528 acres to be remediated. Estimates of leachate production for the Lyndhurst and Rutherford landfills are as follows: Lyndhurst – approximately 20,000 to 25,000 gpd and Rutherford – approximately 13,000 to 18,000 gpd. Regarding Kingsland landfill, there is a leachate collection system currently capturing leachate generated at this landfill.

Permanent wetland impacts associated with the proposed remedial actions could be up to a maximum of 8.9 acres. The impacts are related to remedial activities including capping the site, removal of waste, elimination of leachate seeps, temporary bridges, and culvert replacements. Other temporary disturbances of wetlands during construction will be mitigated. Wetlands located at the Site (along Van Winkle Ditch and other tributaries) will be restored (see Figure 9). Restoration will involve removal of waste from wetlands, re-contouring of the wetland areas, and replanting with wetland vegetation. Additional actions may be taken to improve tidal flow and habitat diversity. The restored wetlands will be protected in future Site development plans.

After the landfill remediation is completed (possibly concurrently with portions of the site remediation) the property will be developed into land uses that are compatible with the HMDC's Redevelopment Plan(s). The bulk of this Site is zoned as recreational and open space. The proposed end-use is a 27 to 36 hole golf complex (i.e., clubhouse, cart barn, maintenance building, snack shops, restrooms, driving range, teaching facilities and a hotel). The development of the golf complex will include a hotel, spa and conference center facility. In addition, it is anticipated that time-share units could be developed as part of the golf complex.

The remediation will involve varying degrees of grade change to achieve remedial design components. The grade change will vary depending upon landfill conditions encountered during Site clearing. Loading sequences across or over a given landfill will be monitored for settlement and loading rates adjusted as needed to assure geotechnical stability. The fill thickness to achieve grade change and to develop sufficient drainage are expected to vary considerably. Consequently, the final Site topography is unknown at this early stage of this project. Therefore, it is impossible to Site or initiate the design of the golf complex. When the remediation is complete and final grade and topographic conditions are known facility siting and design will be possible. Conceptual designs suitable for permitting applications will be developed during this time period. There will be remediation progress reports submitted to all agencies on a periodic basis that will identify milestones achieved during the remediation and construction of the golf complex.

The proposed design of the golf courses are to be of the "links" (Scottish) style. The links style golf course design incorporates natural topography and vegetation, including the high grasses preferred by the marsh hawk and American Bittern. Approximately 50 percent of the golf course area will be maintained as natural or enhanced habitat.

The Meadowlands courses will be designed according to the following principals: environmental planning, wildlife and habitat management, integrated pest management, water conservation, and water quality management. The golf course design will begin after the remedial actions are initiated. However, specific items that will be incorporated into the design include: rough or unplayable areas that will utilize indigenous plants, capture and re-use of water, and habitat enhancement. HMDC plans to dedicate the golf course, surrounding rough, and unplayable areas into "open space" by deed restriction or other appropriate mechanisms.

3.0 SEDIMENT SAMPLING AND TESTING

On March 28 and 29, 2000 sediment sampling was performed at the dredge site location. Seven borings (HMDC-1 through 7) were drilled in the Hackensack River and four borings (HMDC-8 through 11) were drilled in Berry's Creek. The sampling was performed in accordance with NJDEP guidelines and communications of January 20 and 24, 2000.
(Appendix D)

3.1 Objectives and Scope of Work

Based on the correspondence from the NJDEP and various regulatory and engineering requirements, the sampling and analytical tasks to characterize sediment from the Hackensack River and Berry's Creek were identified. It is anticipated that the sediment will be dredged from these water bodies and either used as capping material or disposed of as ID 27 waste at an active disposal facility in the Meadowlands. The major tasks of the sediment sampling and analysis program included:

- Chemical evaluation of fine-grained sediment and clay;
- Structural assessment of the sediment and clay;
- Leachability evaluation of the amended material (sediment); and
- Treatability evaluation for the amended sediment.

3.2 Sampling Program Objectives

The overall objectives of the sediment sampling program were to:

- Evaluate the nature and degree of chemical impacts, if any, of the fine-grained sediment and clay;
- Confirm the chemistry of the clay in the six-inch interval immediately below the anticipated dredging depth to verify the environmental quality of the remaining sediments (post -dredging);
- Assess the geotechnical properties of the dredge materials to verify that they will be acceptable for use as structural fill;
- Assess the potential leachability of amended dredge material (sediment), using the Multiple Extraction Procedure (MEP) and subsequent analysis for SVOCs, pesticides, PCBs, PCDD/PCDFs, and metals; and

- Evaluate the improvement in the structural properties of the sediments through stabilization with pozzalonic reagents.

The treatability testing to evaluate the leachability and structural properties of the amended material is currently underway. This work was completed August 1, 2000. The results of this work will be forwarded to NJDEP under separate cover. Sediment quality data is provided in **Appendix D.**

Sample Types And Overall Scope Of Work

The basic sample types collected, included:

- Uni-core composite samples for grain size, TOC, and percent moisture;
- Multi-core composites for grain size, TOC, percent moisture, and bulk sediment chemistry;
- Uni-core composites (borings 4 and 11) for bulk sediment chemistry;
- Uni- and multi-core composite elutriate samples for bulk sediment chemistry;
- Depth-discrete samples for geotechnical analysis; and Composite samples for sediment treatability analysis.

Samples were collected from eleven boring locations (HMDC-1 through HMDC-11), as shown in Appendix D Figure 2. The number and locations of the samples, as well as the scheme for sample compositing, were directed by NJDEP (in correspondences to IT Corporation, dated January 20, 2000 and January 24, 2000).

Based on existing knowledge with regard to stratigraphy in the site area, it was determined that the bottom sediments encountered beneath both the Hackensack River and Berry's Creek would likely be stratified; silty sediments underlain by a varved silt/clay. As such, composite samples, that are representative of both the silty sediments and the varved silt/clay, were collected and analyzed.

Uni-Core Composite Samples for Grain Size, TOC, and Percent Moisture. Both uni-core and multi-core composite samples were collected and analyzed for grain size, TOC, and percent moisture. The uni-core results are typically compared to the multi-core results as part of NJDEP quality control (QC) evaluations. The scope of the uni-core composite sampling is described in the remainder of this section. Two samples, one representing the silty sediments and the other representing the underlying varved silt/clay, were collected from each of the eleven borings (HMDC-1 through HMDC-11) shown in Appendix D Figure 3 and 4, and analyzed for grain size, TOC and percent moisture. A total of twenty-two composite samples were collected and analyzed for these parameters.

Multi- and Uni-Core Composite Samples for Bulk Sediment Chemistry. Analysis of multi-core composite samples was also conducted for grain size, TOC, and percent moisture. Multi-core composite samples were analyzed for a suite of bulk chemistry parameters, including SVOCs, pesticides, PCBs, PCDDs/PCDFs, and metals. These analyses are required to ensure the sediment planned for excavation is acceptable for use as fill material. Multi-core composite samples, representing the six-inch interval immediately below the expected dredge elevation, were collected and analyzed for the above bulk chemistry parameters.

Based on NJDEP guidance regarding dredge sediment sampling, each type of material in the boring (i.e. silty sediment and/or varved silt/clay), greater than two feet in length, was sampled individually. Based on communication with NJDEP, multi-core composite samples were collected from both the silty sediments immediately

beneath the Hackensack River and Berry's Creek and the underlying varved silt/clay. No other stratification (greater than two feet thickness) was noted. Each type of sedimentary material was composited (per boring), and the material(s) from up to three borings were composited, as discussed further in this section. The boring locations are shown in Appendix D Figure 2.

A total of three multi-core composites (HMDC-AS, HMDC-BS, and HMDC-CS) and two uni-core composite samples (HMDC-4S) and HMDC-11S) were collected to represent the silty sediments immediately beneath the Hackensack River and Berry's Creek. A total of three multi-core composite samples composites (HMDC-AC, HMDC- BC, HMDC-CC) and two uni-core composite samples (HMDC-4C) and HMDC-IIC) were collected from the underlying varved silt/clay. The bottom six inches of varved silt/clay was also composited to form two multi-core composites (HMDC-DC and HMDC-EC).

The following summarize the sample compositing scheme directed by NJDEP for the silty sediments:

- HMDC-AS -Multi-core composite representing HMDC-I, -2 and -3 (Hackensack River);
- HMDC-BS -Multi-core composite representing HMDC-5, -6 and -7 (Hackensack River);
- HMDC-CS -Multi-core composite representing HMDC-8, -9 and -10 (Berry's Creek);
- Discrete Samples -Uni-core composites representing boring HMDC-4 (Hackensack River) and boring HMDC-11 (Berry's Creek).

Three composite samples were also collected from the varved silt/clay:

- HMDC-AC -Multi-core composite representing HMDC-I through -4 (Hackensack River)
- HMDC-BC -Multi-core composite representing HMDC-5 through -8 (Hackensack River)
- HMDC-CC -Multi-core composite representing borings HMDC-9 through -11 (Berry's Creek)

Additionally, the bottom six inches of varved silt/clay in each of the eleven borings were collected directly from the cores submitted to the laboratory .The samples were then composited by the laboratory and analyzed for the full suite of bulk chemistry parameters (SVOCs, PCBS, pesticides, PCDDs/PCDFs, and metals).

These composite samples were designated:

- HMDC-DC: Multi-core composite representing the bottom six inches of HMDC-I through -8 (Hackensack River); and
- HMDC-EC: Multi-core composite from the bottom six inches of HMDC-9 through -11 (Berry's Creek).

Composite Elutriate Samples for Bulk Sediment Chemistry. Three multi-core and two uni-core composite samples (same composite scheme as bulk sediment chemistry) were collected to evaluate the elutriate chemistry. The following bullets summarize the sample compositing scheme for the elutriate:

- HMDC-AE -Multi-core composite representing borings 1,2 and 3 (Hackensack River);

- HMDC-BE -Multi-core composite representing borings 5,6 and 7 (Hackensack River);
- HMDC-CE -Multi-core composite representing borings 8,9 and 10 (Berry's Creek);
- Discrete Samples -Uni-core composites representing HMDC-4 (HMDC-4E, Hackensack River) and HMDC-11 (HMDC-11E, Berry's Creek).

The boring locations are shown in Appendix D Figure 2. A total of three multi-core composite (HMDC-AE, HMDC-BE, HMDC-CE) and two uni-core composite (HMDC-4E and HM -1E) samples were collected to represent the elutriate.

Depth-Discrete Samples for Geotechnical Analysis. A 14-inch depth-discrete sample for geotechnical analysis was obtained from the varved silt/clay encountered in HMDC-2 (Hackensack River) and HMDC-10 (Berry's Creek). Additionally, a six- to eight-inch depth-discrete section was securely wrapped in plastic and placed in Ziploc-type storage bag for evaluation of in-situ moisture content. These samples were analyzed for the following geotechnical parameters:

- Grain Size / Hydrometer Analysis;
- Modified Proctor Density;
- Water Content;
- Shear Strength;
- Soil Classification;
- Atterberg Limits; and
- Permeability at Optimum Moisture and 90 Percent Modified Proctor.

The boring locations are shown in Appendix D Figure 2.

Composite Sample for Sediment Treatability Analysis. A composite sample of the silty sediments was collected for treatability analysis by IT Corporation's laboratory in Knoxville, Tennessee. The treatability work will evaluate the improvement in the structural properties of the silty sediments through stabilization with pozzalonic reagents. As indicated previously, the treatability work results will be provided to NJDEP under separate cover. The results of the sediment testing are provided in Appendix D.

4.0 PROPERTY OWNERSHIP ISSUES

4.1 Dredging

The proposed dredging limits lie within properties currently owned by Borough of Rutherford that will be purchased by the HMDC. Appendix I includes tax maps for properties and a listing of the property owners' addresses.

The submerged lands within the project area are the subject of a Tidelands Application that was submitted on July 14, 2000. (Appendix H) The Tidelands Application is currently being reviewed.

Several properties lie adjacent to the proposed works. The owners of these properties are identified in Appendix I. Certified letters of notification were sent to the property owners, advising them of the HMDC/EnCap's application to the Department. Copies of Certified mail receipts are presented in Appendix I. Certified notification letters were also sent to the appropriate municipal and County officials.

Avon Site. The Avon site, approximately 118 acres, is comprised of Block 231 Lot 14 and Block 233 Lot 14. The State of New Jersey is the owner of Block 233 Lot 14 representing 66.6240 acres. The remaining Lots are owned by private parties.

Lyndhurst Site. The Lyndhurst site, 153 acres, is comprised of Block 231 Lot 9 (partial), 11 and 12 and Block 233 Lot 10 through 12 and 15. Property owners are provided in Appendix I.

Rutherford Site. The Rutherford site, 286 acres, is comprised of Block 220 Lot 1 through 12, 14, 15.01 through 15.03. Property owners are provided in Appendix I.

Kingsland Site. The Kingsland site, 195 acres, is comprised of: Block 236 Lot 1, 1.01, and 1.02; Block 194 Lot 1; Block 195 Lot 1; Block 197 Lot 1; and Block 198 Lot 1 through 3. Property owners are provided in Appendix I.

Acquisition of title to these properties is underway. The HMDC is acquiring all necessary properties through friendly acquisition or condemnation.

5.0 ENVIRONMENTAL ASSESSMENT

The Draft Environmental Impact Statement (EIS) for the Hackensack Meadowland District Special Area Master Plan was issued in July 1995. The objective of the SAMP is to balance environmental and economic development needs. This project is currently being incorporated into the final EIS for the SAMP and will be subjected to a detailed environmental evaluation. This project has minimal negative impacts and substantial positive environmental impacts. Specific areas of concern including fishery resources, wetland impacts, and threatened and endangered species are discussed in this document.

5.1 Existing Conditions

The existing environmental conditions are detailed in Section 3 of the SAMP Draft EIS. The following are excerpts related to particular areas of concern.

The important biological resources in the river and its tributaries are the fish and other aquatic species found there. These resources were assessed and monitored by the HMDC during 1987 and 1988 (HMDC, 1989). A total of 339 individual samples were taken at 22 different locations, using four different sampling methods. Of particular importance for this project are the fish resources.

Fish Populations. Based on the data collected during the two years of the study, several observations can be made regarding the fish species found in the District as follows:

The fish population is reported to be dominated (numerically) by the mummichog (Fundulus heteroclitus). This species represents approximately 90% of the individuals caught. Other abundant fishes were the Atlantic silverside, inland silverside, white perch, blueback herring, Atlantic tomcod, brown bullhead, pumpkinseed, American eel, and bay anchovy.

BCSA0127612

The composition of the fish community is reported to vary seasonally with two peaks in species diversity .The first peak occurs in the spring and the second in the fall. The peaks correspond to periods of seasonal use such as the spring and fall migrations. Fish using the estuary as a refuge from predators and/ or as a nursery area also contributed to these peaks.

The dominance of one species in a population is characteristic of stressed environments, such as those subject to pollutants. In the Hackensack River the environmental factor, which most affects the aquatic habitat, is reported to be low levels of dissolved oxygen. The mummichog has become dominant in the river and its tributaries because it is a salt marsh fish that is adapted to periods of low DO and can survive the stresses caused by periods of low DO that occur (McLane, 1978). This can be disputed.

Although the River is stressed because of low dissolved oxygen levels it is still an important habitat. The main stem of the river south of the Meadowlands sports complex is used by the Atlantic tomcod and American Shad that were listed as a T/E species in the AVID (EPA, 1989), but are not officially listed as a threatened or endangered fish in New Jersey. The open water areas are also important winter habitat for diving ducks.

Threateried and Endangered Species. A detailed discussion of the occurrence and distribution of endangered and threatened species is provided in Section 3.3.1 of the SAMP Draft EIS. Of particular interest is the Berry's Creek area (South of NJ Route 3). The wetlands and uplands in this area have been identified as resting, breeding, and feeding habitat for several species, including northern harrier, American bittern, peregrine falcon, Savannah sparrow, sedge wren, bobolink, and salt marsh bulrush.

The entire length of the Hackensack River is identified as a habitat for American shad, while the Hackensack River from Mill Creek south is identified as a habitat for Atlantic tomcod.

The peregrine falcon is addressed extensively in section 3.3.1 the SAMP Draft EIS and is not discussed in this document. Those species, which are listed for the project area, are discussed below.

Salt Marsh Bulrush. The salt marsh bulrush (Scirpus maritimus) is wetland plant on New Jersey's endangered species list. Within the District, it has been found in the wetlands around lower Berry's Creek, which comprise approximately 730 acres.

Northern Harrier. The breeding population of the northern harrier (Circus cyaneus) is listed as endangered in New Jersey. The northern harrier is not especially sensitive to human activity. In the District, the identified habitat for this bird is the wetlands and uplands around lower Berry's Creek (approximately 730 acres of wetlands and 405 acres of uplands). The New Jersey Audubon Society, (NJAS) reports that in 1975, there were four nesting pairs of northern harrier in the District. By 1979, harriers were down to two nesting pairs, and in the 1990s, only one pair remained in the Berry's Creek area.

Bobolink. The bobolink (Doliconyx oryzivorus) is listed as a threatened bird in New Jersey. The bobolink is not known to be sensitive to human activity, and it may nest in the District. Within the District, the habitat identified for the bobolink includes approximately 730 acres of wetlands and 405 acres of upland around lower Berry's Creek.

Savannah Sparrow. The savannah sparrow (Passerculus sandwichensis) is included on New Jersey's list of threatened birds. Within the District, approximately 1,820 acres of wetlands and 415 acres of uplands around lower Berry's Creek and the Sawmill Creek Wildlife Management Area have been identified as habitats for the savannah sparrow.

American Bittern. The breeding population of the American bittern (Botaurus lentiginosus) is listed as threatened in New Jersey. The American bittern is usually found hidden deep in a wetland amongst emergent plants. It, also may nest in the Meadowlands. Within the District, the identified habitat for this bird include approximately 2,715 acres of wetlands and 520 acres of uplands, including: wetlands along Belleville Turnpike, Mill Creek, and the "high salt marsh" near the Hackensack River south of Route 3; and wetlands and uplands near lower Berry's Creek, Kearny Marsh, and Sawmill Creek Wildlife Management Area.

Sedge Wren. The sedge wren (Cistothorus platensis) is a state-endangered bird. Sedge wrens are not known to be especially sensitive to human disturbance, but they may nest in the Meadowlands. Within the District, identified habitats for the sedge wren encompass approximately 730 acres of wetlands and 405 acres of uplands around lower Berry's Creek.

American Shad. The American shad (Alosa sapidissima) was listed as a T /E species in the AVID (EPA, 1989), but is not officially listed as a threatened or endangered fish in New Jersey. Within the District, the entire length of the Hackensack River has been identified as habitat for the American shad.

Atlantic Tomcod. The Atlantic tomcod (Microgadus tomcod) was listed as a T /E species in the AVID (EPA, 1989) , but is not officially listed as a threatened or endangered fish in New Jersey. Within the District, the Hackensack River south of Route 3 and the deeper channels in the Sawmill Creek Wildlife Management Area have been identified as habitat for the Atlantic tomcod.

Aquatic Habitat. The existing bathymetry at the dredge site is presented in Appendix B. Of concern is the potential loss of approximately 0.25 acres of subtidal and intertidal habitat.

5.2 Environmental Impacts of the Proposed Project

5.2.1 Introduction

The proposed project has net positive environmental impacts including providing an upland disposal option for harbor wide dredging projects and local water quality improvements resulting from the reduction of leachate generation.

The proposed project also provides a feasible alternative to ocean disposal at the HARs. Public opposition to ocean disposal of dredged materials from the New York-New Jersey Harbor is widespread. The USEPA is currently re-evaluating the sediment quality criteria for disposal at the HARs. The criteria is likely to be more stringent resulting in additional dredged material that will require upland disposal. Currently, upland disposal capacity is limited. Additional requirements for upland disposal would result in either the elimination or deferral of dredging projects required to support the economic viability and environmental quality of the harbor.

The proposed project offers approximately four (4) million cubic yards in capacity for upland beneficial use of dredged material. This additional capacity provides the

USACE with an economically and environmentally sound upland alternative and at the same time avoiding public opposition to ocean disposal. Further, this alternative will provide assurances to the Maritime transport industry that their ports dredged material will be disposed in a timely manner.

The proposed remedial actions at the Avon site would result in water quality improvement in the Hackensack River, Berry's Creek and other local tributaries of the Hackensack River. Currently, leachate produced in the landfills is adversely impacting water quality. Estimates of leachate production are approximately 100,000 top 140,000 gallons per day for Avon Landfill, which represents 97 acres of the 342 acres to be remediated.

Project specific impacts are related to; wetlands, subtidal and intertidal habitats, fish populations, endangered species, and noise.

5.2.2 Wetland Impacts

Wetland impacts associated with the proposed remedial actions are approximately 9 acres as summarized in Table 2 and shown in Appendix N.

The impacts are related to remedial activities including elimination of leachate seeps, bridges, and culvert replacements. Approximately, 30 acres of wetlands located at the remediation sites (south-east of the Avon Landfill and along Van Winkle Ditch) will be restored or enhanced (see Figure 9). Restoration will involve removal of waste to the landfills to be capped, re-contouring of the wetland areas, and replanting. Additional actions may be taken to improve tidal flow and habitat diversity. The draft wetland mitigation plan is provided as an attachment to this document. The enhanced wetlands will be protected in future site development plans.

5.2.3 Subtidal and Intertidal Habitat

The design of the sediment off-load facility has been modified to minimize the dredge area and impacts on subtidal and intertidal habitat. With the current design there will be a loss of about 0.25 acres of existing habitat. However, through pull back of the existing riprap and waste between the rotating crane structures additional habitat can be created. It is anticipated that the final design will result in a net increase of subtidal and intertidal habitat.

5.2.4 Fishery Resources

There will be no significant alteration to the habitat of Berry's Creek and the Hackensack River as stated above. In addition, the dredging will be timed to avoid impacts on the fish species of concern. The dredging period is being assessed under the Essential Fish Habitat evaluation prepared for the US Army Corps of Engineers. Net water quality improvements, due to elimination of leachate from the Avon site, will result in a positive impact on the fishery.

TABLE 2
WETLAND IMPACT AREAS

Wetland Impact Area	Acres	Description
1	0.03	Portion of Wetland Area E
2	0.05	Portion of Wetland Area F
3	0.24	Portion of Wetland Area M
4	0.17	Portion of Wetland Area N
5	0.06	Portion of Wetland Area K - Berry's Creek - east bank at Transco Pipeline
6	0.01	Berry's Creek center pier
7	0.23	Portion of Wetland Area J – Berry's Creek - west bank
8	1.14	Portion of Wetland Area D – Edge
9	0.05	Portion of Wetland Area D – Van Winkle Ditch
10	0.19	Portion of Wetland Area D – ditch at Valley Brook Avenue
11	1.03	Portion of Wetland Area A – Bucks Creek east of Valley Brook Avenue
12	2.40	Portion of Wetland Area B – Bucks Creek west of Valley Brook Avenue
13	1.01	Portion of Wetland Area C at Valley Brook Avenue
14	0.07	Portion of Wetland Area P at culvert to Van Winkle Ditch
15	0.07	Portion of Wetland Area P north edge
16	0.22	Portion of Wetland Area P – ditch along Valley Brook Avenue
17	0.25	Portion of Wetland Area S at Berry's Creek west bank
18	0.20	Portion of Wetland Area K at Fish Creek
19	0.11	Portion of Wetland Area L at Fish Creek
20	0.82	Portion of Wetland Area P – south bank
21	0.24	Portion of Wetland Area P – north bank
22	0.03	Portion of Wetland Area K – Berrys Creek North Rutherford Road
23	0.09	Portion of Wetland Area K – North Rutherford Access Road
24	0.19	Wetland Area T
Total	8.9	

5.2.5 Endangered and Threatened Species

The project is not expected to adversely impact the threatened and endangered species reported at the project site. The species of major concern are the Northern Harrier and American Bittern. As previously stated, the proposed links golf course design incorporates natural topography and vegetation including the high grasses preferred by the marsh hawk and American Bittern, in the design. Approximately 50 percent of the golf course area will be maintained as natural or enhanced habitat. The natural areas will be established as protected out-of-play areas, as required to protect nesting and breeding pairs. Specific items that will be incorporated into the

BCSA0127616

design include: wetland buffer areas, rough or unplayable areas will utilize indigenous plants, capture and re-use of water, and habitat enhancement.

There will be net positive impacts on habitat quality through water quality improvements, wetland restoration/enhancement activities, and the reduction of potential exposure to contaminated soils and vegetation.

5.2.6 Noise

There are six general classes or noise sources in industrial settings: power-generating units; fluid control systems; process equipment; atmospheric inlets and discharges; materials handling; and plant traffic. Material handling and traffic are the significant sources of noise at the proposed sediment unloading and processing facility.

The determination of noise as a form of environmental pollution has gained wide acceptance throughout both public interest groups and government agencies in the last few years. As a result, noise levels are considered in the overall evaluation of environmental impact of a proposed project

The determining factors of how sound is perceived by the human ear include the actual level of the sound (or noise), the frequencies involved, the exposure length, and the changes or fluctuations during exposure. Because frequencies are not equally perceived, this measure is adjusted or weighted to correspond to human hearing. This adjusted unit is known as the decibel (A-weighted), or dB (A).

Noise impacts related to the operation of the Off-Load Facility were evaluated using a methodology recommended by the National Institute of Occupational Health and Safety. The procedure involves determination of the Sound Pressure Level (SPL) for each piece of equipment, summation of equipment SPL's to allow the facility to be treated as a singular source, and determination of SPL at identified worst-case receptors.

Summation of SPL's for equipment of the Facility was done assuming that the sources were not identical (i.e., non-coherent) in the noise produced using:

$$SPL_f = 10 \text{ Log } [10^{SPL/10}]$$

The SPL due to the facility at specific receptor locations was determined using the formula:

$$SPL_2 = SPL_f + 20 \text{ Log } (d1/d2)$$

where d1 = 4 feet and d2 = the receptor distance from the source.

The 20 log or -6 dB spherical doubling was used due to the absence of noise corridors.

The resultant SPL at the receptor locations was then calculated. This approach accounts only for sound attenuation due to divergence. It does not include attenuation by air or ground.

Equipment proposed for the sediment handling facility will comply with applicable Noise and Building Codes. To reduce noise impacts during operation to the lowest levels possible, the following mitigating measures will be employed:

- A variety of noise-limiting devices such as mufflers, silencers, baffles, etc., will be used on high-noise-level equipment; and

- Any noise-generating sources will be oriented as much as possible facing away from residential areas and will be provided with noise-reducing structures when such orientation does not suffice.

Facility equipment and systems will be specified to ensure that the noise levels at the nearest residence due to Facility operation will conform with all applicable noise codes.

Upon start-up of operations, a noise monitoring program will be implemented to demonstrate compliance with applicable regulations. If the data indicates non-compliance with the applicable standards, mitigation measures will be implemented by the applicant. Further data will be collected to demonstrate the effectiveness of the remedial measures. Long-term noise monitoring, if required, will be performed by the applicant.

The worst-case resultant noise increases without mitigation at the Harmon Cove location are shown in Table 3. Table 4 presents worst case Harmon Cove building interior noise increases with attenuation by windows and the building structures.

Table 3
Harmon Cove (Ground Level)-Worst-Case Receptor Sound Level [dB(A)]

Description	SPL	Resultant SPL
Highest Recorded Day Ambient	67	
SPL from Facility	49	
		67
Lowest Recorded Day Ambient	52	
SPL from Facility	49	
		54
Average Day Ambient	55	
SPL from Facility	49	
		56
Nighttime Ambient	52	
SPL from Facility	49	
		54

Table 4
Harmon Cove (Building Interior)-Worst-Case Receptor Sound Level [dB (A)]

Description	SPL	Resultant SPL
Highest Recorded Day Ambient	67	
SPL from Facility	29	
		67
Lowest Recorded Day Ambient	52	
SPL from Facility	29	
		52
Average Day Ambient	55	
SPL from Facility	29	
		55
Nighttime Ambient	52	
SPL from Facility	29	
		52

The noise level increases due to facility operation are limited to a maximum increase of 2 dB during periods of the lowest ambient sound pressure levels. There is no noise increase anticipated for the Harmon Cove interior spaces provided windows are closed.

6.0 COMPLIANCE WITH COASTAL ZONE MANAGEMENT

The proposed project requires compliance with Coastal Zone Management Rules (N.J.A.C. 7:7E). Appendix J addresses the following rules:

Special Water's Edge Areas (7:7E-3.25 through 7:7E-3.32),
Wetlands (7:7E-3.27),
Wetlands Buffers (7:7E-3.28),
Finfish Migratory Pathways (7:7E-3.5),
Navigation Channels (7:7E-3.7)
Ports (7:7E-3.11),
Submerged Infrastructure Routes (7:7E-3.12),
Shipwrecks and Artificial Reefs (7:7E-3.13),
Intertidal and Subtidal Shallows (7:7E-3.15),
Beaches (7:7E-3.22),
Filled Water's Edge Areas (7:7E-3.23),
Endangered or Threatened Wildlife or Vegetation Species Habitat (7:7E-3.38),
Critical Wildlife Habitats (7:7E-3.39),
Public Open Space (7:7E-3.40),
Special Hazards Areas (7:7E-3.41)
Hackensack Meadowlands District (7.7E-3.45)
Geodetic Control Reference Marks (7:7E-3.47),
General Water Areas Acceptability Conditions for Uses (7:7E-4.2 g,h,j & q),
Resort/Recreation Use (7:7E-7.3)
Port Use Rules (7:7E-7.9),
Dredged Material Disposal on Land (7:7E-7.12),
Marine Fish and Fisheries (7:7E-8.2),
Water Quality (7:7E-8.4),
Stormwater Management (7:7E-8.7),
Public Access to the Waterfront (7:7E-8.11),
Scenic Resources and Design (7:7E-8.12), and
Buffers and Compatibility of Uses (7:7E-8.13).

BCSA0127619

ATTACHMENT 27

ID 65

Report Number 1970-0[illegible]

ANALYSIS OF ALTERNATIVE SOLID WASTES MANAGEMENT SYSTEMS FOR THE HACKENSACK MEADOWLANDS DISTRICT

Prepared for

THE HACKENSACK MEADOWLANDS DEVELOPMENT COMMISSION
STATE OF NEW JERSEY

Edmund T. Hume, Chairman
William D. McDowell, Vice Chairman
John E. Vaughn, Treasurer
Isadore Glauberman
Irwin W. Silverman
Myles S. Spector

Clifford A. Goldman, Acting Executive Director
Clayson W. Foley, Acting Chief Engineer

Prepared by

ZUEH ENVIRONMENTAL ENGINEERS
831 Parkway Avenue
Trenton, N. J. 08618

Headquarters
Watergate Office Building
2600 Virginia Avenue, N.W.
Washington, D. C. 20037

Regional Office
610 Lefrak Tower
97-45 Queens Boulevard
Forest Hills, N. Y. 11374

MAY 1970

BCSA0095570

TABLE IV-1

SUMMARY OF SOLID WASTE LANDFILLING IN THE MEADOWLANDS - 1968

LANDFILL OPERATION*	SOLID WASTES - TONS PER WEEK				
	DOMESTIC	INDUSTRIAL	COMMERCIAL	DEMOLITION	TOTAL
Kearny I	411	805	92	1,707	3,015
Kearny II	1,105	1,528	586	2,192	5,411
Kearny III	375	494	39	89	997
Kearny IV	1,669	1,273	541	208	3,691
Kearny V	1,659	11	1	16	1,687
North Arlington I	806	404	46	17	1,273
North Arlington II	450	649	60	771	1,9[illegible]
Lyndhurst I	1,571	2,642	99	94	4,406
Rutherford I	1,654	785	353	130	2,922
Secaucus	882	1,099	651	823	3,455
Little Ferry	39	-	-	664	703
TOTALS	10,621	9,690	2,468	6,711	29,490

Data from New Jersey Department of Health survey

* Locations of Landfills shown on Figure V-I.

BCSA0095599

TABLE IV-2

QUANTITIES OF SOLID WASTES DISPOSED OF AT LANDFILL SITES IN THE MEADOWLANDS BY ALL KNOWN CONTRIBUTING COMMUNITIES

Sources of Solid Wastes	WASTES DUMPED AT EACH LANDFILL SITE, Tons/week										
	Kearny I	Kearny II	Kearny III	Kearny IV	Lyndhurst I	Rutherford	Secaucus	N.Arlington I	N.Arlington II	Little Ferry	TOTAL
BERGEN COUNTY											
Allendale	-	-	-	-	-	-	-	22.0	-	-	22.0
Bergenfield	-	-	-	3.6	-	18.7	-	-	-	-	22.3
Bogota	-	-	-	-	0.7	18.6	-	-	-	4.7	23.9
Carlstadt	9.7	-	-	3.1	58.8	264.9	25.9	-	4.1	-	366.6
Cliffside Park	-	-	-	-	-	7.2	-	-	-	-	7.2
Closter	-	-	-	-	-	9.2	-	-	-	-	9.2
Dumont	-	-	-	-	-	1.9	-	-	-	-	1.9
East Paterson	-	-	-	-	1.9	95.4	-	-	13.7	36.2	147.1
East Rutherford	-	8.3	-	1.0	74.5	150.1	-	-	-	-	234.8
Edgewater	-	-	-	-	-	-	42.5	-	-	-	42.5
Emerson	-	-	-	-	1.7	9.2	-	-	2.7	-	13.5
Englewood	-	-	-	-	4.1	25.7	-	-	-	2.3	32.1
Fair Lawn	-	-	-	2.5	281.2	17.5	-	4.4	-	-	305.5
Fairview	-	-	-	-	-	2.3	-	-	-	3.6	5.9
Fort Lee	-	-	-	-	-	53.1	0.9	-	-	174.0	228.1
Garfield	-	-	-	-	7.7	11.1	-	-	3.7	-	22.6
Glen Rock	-	-	-	3.8	-	85.6	0.7	-	-	-	90.0
Hackensack	-	-	1.4	3.5	23.9	329.5	12.1	-	-	19.2	389.5
Hasbrouck Heights	-	-	-	0.2	2.5	83.4	-	-	-	47.1	133.1
Hillsdale	-	-	-	-	-	54.9	-	-	-	-	54.9

Data from the New Jersey Department of Health

BCSA0095600

TABLE IV-4

QUANTITIES OF SOLID WASTES GENERATED AND DISPOSED OF IN THE MEADOWLANDS DISTRICT BY AREAS ADJACENT TO THE DISTRICT

COUNTY	ZONE 1			ZONE 2		
	Generated Tons/Week	Meadowlands Disposal Tons/Week	Percent to Meadowlands District	Generated Tons/Week	Meadowlands Disposal Tons/Week	Percent to Meadowlands District
Bergen	4,670	4,395	94	2,970	931	31
Essex	13,890	10,262	75	3,350	1,114	33
Passaic	1,760	1,762	100	3,450	1,561	45
Hudson	4,850*	4,850	100	0	0	-
Union	270	2	1	3,900	271	7
Totals	25,440	21,271		13,670	3,877	
Averages for Zones			84			28

* Not including materials handled by Bayonne and Jersey City facilities

BCSA0095611

ATTACHMENT 28

Kimball
L. Robert Kimball & Associates
Corporate Headquarters
615 West Highland Avenue, P.O. Box 1000, Ebensburg, PA 15931 Phone: 814/472-7700 Fax: 814/472-7712
www.lrkimball.com E-Mail: aande@lrkimball.com

September 28, 2001

Mr. Michael S. Kenney
NJ Department of Environmental Protection
Responsible Party Cleanup Element
410 E. State Street
Trenton, NJ 08625-0028

Re: Final Remedial Investigation Report for Lyndhurst and Rutherford Landfill
Township of Lyndhurst and Borough of Rutherford
Bergen County, NJ

Dear Mr. Kenney:

Enclosed are five (5) copies of the Final Remedial Investigation Report for the Lyndhurst and Rutherford Landfills conducted for the Meadowlands Golf Resort Project.

Sincerely,

Michael E. Benner, P.G.
Project Manager

Enclosures
99-0864/C/A/C/01LT0928
cc: J Hockensmith, Encap
J. Cappolla, DFG
J. Sartor, PS&S

Final
Remedial Investigation Report
For
Lyndhurst Landfill and Rutherford Landfill
Township of Lyndhurst and Borough of Rutherford,
Bergen County, New Jersey

Prepared for:

EnCap GOLF Holdings, LLC
TAMPA, FLORIDA

September 2001

PREPARED BY:

Joseph W. D'Andrea
Senior Technical Leader

Michael E. Benner PG
Project Manager & Geologist

L. ROBERT KIMBALL & ASSOCIATES,
ARCHITECTS AND ENGINEERS, INC.
615 WEST HIGHLAND AVENUE
EBENSBURG, PA

undisturbed areas of the Rutherford Landfill area. Due to the saline conditions, reported groundwater quality is poor within the unconfined aquifer connected with local surface water bodies and the landfilled waste and in the underlying confined aquifer in and immediately beneath the underlying silt and clay.

Groundwater in the local bedrock north of the landfills is reported poor but suitable for secondary uses. Well searches have identified several groundwater withdrawl wells in the nearby ridge of sedimentary rock north of the landfills.

5.1.3 Surface Water

The study area is located within the Berry's Creek Watershed of the Hackensack River Drainage Basin, which fall within the reach of saline water from the New York Bay. The tributaries to Berry's Creek within the study area include Fish Creek, various drainage ditches surrounding the Rutherford Landfill, Van Winkle Ditch and Viola Ditch surrounding the Lyndhurst Landfill, and surface run-off pathways from properties along Valley Brook Avenue into the aforementioned surface waters.

Surface water quality of Berry's Creek and the Hackensack River form the baseline conditions for the study area due to twice-daily turnover of surface water with tidal fluctuation. Tidal flows from Berry's Creek and the Hackensack River dominate surface water flow within and out-side of the study area. As an urban watershed, Berry's Creek and the Hackensack River exhibit elevated concentrations of regional urban deposition and permitted and un-permitted discharges from industrial, municipal, and highway storm and sewer systems.

Environmental data collected on a quarterly basis from Berry's Creek and the Hackensack River by the Hackensack Meadowlands Development Commission and site investigations conducted in 2000 and 2001 indicate cadmium, lead and nickel have consistently exceeded SWQC in the regional surface water system. Surface water results from New Jersey Turnpike Authority studies in 1985 also showed arsenic, chromium, copper, lead, nickel and zinc to exceed SWQC in the Hackensack River upstream and downstream of the study area.

Results of analyses performed during the current investigations confirm poor quality of the Berry's Creek and Hackensack River upstream of the landfill areas. Results of analyses performed on surface water samples collected in 2001 from locations approximately ½ to 1 mile upgradient of the study area showed arsenic, manganese and thallium to be above SWQC. In one sample from the Hackensack River, about 1-mile north of the project area, fifteen PAH compounds were above the SWQC. Trace concentrations of several volatile organic compounds, including acetone, chlorobenzene, m/p xylenes, and toluene have been detected in area surface waters.

Prior and current investigations confirm on-going discharge of landfill leachate via small-volume seeps at the river/waste fill interface. In most cases, the seeps were observed at the point the stream sediment meets the eroded fill face. A few smaller seeps are visible as stained sediment and rivelets eminating from steeper sediment slopes out from the fill. Most seeps were observed

to slow and/or stop flowing at low tide, indicating the source of seepage is stream water coming back out of fill material. As noted for the groundwater flow potential discussions, except for a mound of groundwater in the Rutherford East fill, the hydraulic potential for leachate flow out of the fill is limited to response to tidal fluctuations and periods of extreme storm events.

Results of laboratory analyses performed on the leachate seeps indicate presence of inorganic and organic constituents at concentrations at and above those concentrations found in the local surface water systems. As such, the leachate seeps generate contaminant loading above that of the background contaminants observed in Berry's Creek and the Hackensack River.

5.1.4 Sediment

Investigations conducted over the past 15 years on sediments from Berry's Creek and the Hackensack River consistently have identified elevated presence of heavy metals in the watershed. Metals found to consistently exceed SWQC include cadmium, chromium, copper, lead, mercury, nickel and zinc. Volatile organic compounds, herbicides, pesticides or PCBs have been detected in sediment samples but have not generally exceeded of SWQC. As a saline ecosystem, Marine/Estuarine Screening Criteria are used to compare the levels of contamination noted in and surrounding the study area. Marine/Estuarine Effects Range Low (ERL) and Effects Range Medium (ERM) are used as applicable.

Seven PAHs recurrently detected above ERL Criteria in sediments inside and outside of the study area include: benzo(a)anthracene, benzo(b)fluoranthene, chrysene, benzo(a)pyrene, indeno(1,2,3-cd) pyrene, phenanthrene, and pyrene. The apparent source for these compounds is regional deposition of combustion byproducts and migration with storm water and tide to the local surface waters.

5.2 Rutherford Landfill Investigations

Historical records indicate Rutherford Borough operated the Rutherford Landfill between about 1961 and 1969, with fill east of the NJ Turnpike concentrated between about 1966 and 1969. Approximately 93 acres of the Rutherford Landfill study area consists of land surfaces constructed by filling former saline marshland with waste originating from municipal, industrial, commercial, and demolition waste sources. The horizontal extent of fill extends to surface water bodies and marshland that surround the landfill. Approximately 180 acres of undisturbed and partially disturbed marshland remain within the Rutherford Landfill study area. The remaining portions of the study area consist of open water.

Waste was placed directly into former marshland by end dumping, resulting in waste being placed atop marsh soil and into open water. Former marshland meadow mat and organic silt also were pushed aside as a mud wave and excavated as fill activity progressed from northwest to southeast. Bore log information indicates that three to 18 feet of black organic material remain beneath the waste fill. Borings advanced near the intersection of Berry's Creek and the Hackensack River observed black organic silt to at least 41 feet below ground surface, indicating a probable location of river scour into underlying varved silt and clay observed elsewhere in the

landfill. Waste and organic soil are visible at the toe of slope in Berry's Creek, Fish Creek, the Hackensack River, and various ditches constructed along the edge of fill. Riprap surface cover has been placed along portions of the Hackensack River shoreline exposed by river erosion.

Waste fill recorded in borings and test pits consisted of debris, rubber, glass, wood, plastic, metal goods and other residential and commercial waste materials. No concentrated mass of industrial waste was observed, although historical records indicate disposal of industrial waste.

Current surface cover varies throughout the landfill. In general, the landfill surface is irregular, disturbed and covered by a zero to two feet thick layer of sandy soil. Phragmities and tall grasses dominate undeveloped portions of the landfill. Various trees and shrubs populate localized areas and stream banks. Numerous areas of disturbed ground and areas littered with concrete rubble and municipal wastes are distributed throughout the landfill.

Wastes are exposed at ground surface at several areas of disturbed land in all portions of the landfill. Access to the landfill and disturbed areas is unrestricted. As such, direct contact with waste and contaminated soil remains as an on-going risk factor to human, avian, amphibian, and mammalian receptors.

Vegetation has aggressively covered portions of the landfill, with numerous areas of standing trees and brush. A dense growth of vegetation covers the undisturbed portions of the landfill and has developed a strong surface thatch. The disturbed and irregular land surfaces increase rainfall infiltration into landfilled waste. The shallow surface slope, irregular surfaces, and surface cover reduce the risk of surface soil migration by surface erosion.

5.2.1 Rutherford Landfill Soil/Fill/Debris Investigations

Waste fill in Rutherford East (the fill area east of the NJ Turnpike) was observed from 11.5 feet to 37 feet beneath ground surface. The average waste thickness was about 17.2 feet. The surface elevations of the fill area east of the turnpike vary from five feet along the outer edge to about 28 feet above MSL. A 1.6 to 6.5 feet thick layer, averaging about 3.2 feet, of black organic soil and meadow mat was observed beneath the fill. Gray varved clay observed beneath the meadow mat is reported to extend to more than 100 feet below MSL.

Waste fill was observed from about 4 to 11 feet beneath ground surface in Rutherford West (the fill area immediately west of the turnpike). The waste fill thickness averaged about 8.3 feet. The surface elevations measured in the area varies from 4.5 feet above MSL in several depressions and along the stream edges to an average of seven to eight feet above MSL. Several areas of localized fill measure nine to ten feet above MSL. Fill profiles indicate the waste was placed in multiple lifts over the operating life of the landfill, ultimately achieving upper surface elevations of four to ten feet above MSL. About 2.4 feet to 7.9 feet of organic material and meadow mat were observed beneath the fill in the borings. The average thickness of the organic silt layer was about 4.5 feet. Gray clay was observed beneath the organic soil, with top of clay at negative seven to ten feet elevation.

ATTACHMENT 29

Lyndhurst/Rutherford Redevelopment Project

Lyndhurst Township, Bergen County, New Jersey

Interim Remedial Investigation Report

For

Lyndhurst and Rutherford Landfills

DRAFT

Sections 1, 2, 3 and 4 only

Tables 1 through 68

Figures 1 through 17

Prepared for:

EnCap GOLF LLC
TAMPA, FLORIDA

PREPARED BY:

Joseph W. D'Andrea
Senior Environmental Specialist

Michael E. Benner PG
Project Manager

L. ROBERT KIMBALL & ASSOCIATES, INC.
CONSULTING ARCHITECTS AND ENGINEERS
615 WEST HIGHLAND AVENUE
EBENSBURG, PA

1.0 INTRODUCTION

L. Robert Kimball and Associates, Inc. (Kimball) has prepared this Remedial Investigation Report for EnCap Golf LLC of Tampa Florida to document results of environmental and physical conditions at the Lyndhurst and Rutherford Landfills in Lyndhurst Township and the Borough of East Rutherford, Bergen County, New Jersey.

Section 1 outlines the project purpose, objectives, and description of the project. Section 2 presents the physical setting of the project area as developed using historical documents, research, and results of investigations by Kimball and others. Section 3 presents the results of previous investigations performed by others. Section 4 presents the technical overview of the investigative work performed in 1999, 2000 and 2001. Section 5 presents the results of investigations performed in 1999, 2000 and 2001. Section 6 discusses the compiled results and interpretation of findings. Section 7 presents the results of a baseline ecological assessment for the site. Section 8 presents conclusions and recommendations based on the results of investigations and background research.

1.1 Purpose and Objectives

The purpose of this remedial investigation for the Lyndhurst and Rutherford Landfills was to evaluate and substantiate previous findings, fill data gaps in the conceptual model, and establish current conditions needed to support design and construction anticipated in closing the landfills. The objectives of this work were to:

- Determine subsurface characteristics of the site, including soil characteristics, horizontal and vertical extent of wastes, and stratigraphy.
- Determine hydrologic characteristics of the site, physical and chemical characteristics of site groundwater and impacts of tidal fluctuations in nearby surface water bodies.
- Determine the type and concentration of contaminants in landfill gas, surface soil, groundwater, surface water and sediments.
- Collect information needed to characterize baseline conditions at the landfill edge in order to determine capping and other needed engineering controls.

1.2 Site Location and Description

The Lyndhurst and Rutherford Landfills are situated along the west bank of the Hackensack River in Lyndhurst Township and Rutherford Borough, Bergen County, New Jersey. Figure 1 – Site Location Map, presents the site location at the eastern end of Valley Brook Avenue, south of Route 3 and west of the NJ Turnpike and Hackensack River. The current land surfaces were constructed by filling former saline marshland with soil, debris, and waste over a 10 to 15 year period from the mid-1950's until 1969. Figure 2 – Site Layout Map and the following describe the significant cultural and geographic surface features noted in the vicinity of the study area.

Lyndhurst Landfill – Lyndhurst Landfill consists of man-made lands north and east of the Jersey City Aqueduct constructed between the mid 1950s and 1969 by filling former marshland with solid waste from municipal, industrial, commercial and demolition sources. Lyndhurst Landfill extends from Van Winkle Ditch to Berrys Creek.

Rutherford Landfill – Rutherford Landfill consists of man-made lands north and east of Berrys Creek. The landfill was constructed between 1961 and 1969 by filling former marshland with solid waste from municipal, industrial, commercial and demolition sources. The Rutherford Landfill was constructed between Berrys Creek, the NJ Transit Bergen Line, and the Hackensack River. Landfill operations ended prior to completely filling the marshland.

NJ Transit Bergen Line - The NJ Transit Bergen Line consists of an earthen embankment constructed prior to 1900 in former marshland. The rail embankment defines the northeast extent of the Rutherford Landfill.

NJ Transit Main Line - The NJ Transit Main Line, formerly owned by Conrail and earlier the Erie-Lackawanna Railroad, consists of an earthen embankment constructed prior to 1900 in former marshland. The rail embankment defines the western extent of the waste fill area of the Avon Landfill.

Williams Pipelines - Two steel natural gas pipelines are constructed in an earthen embankment in a 60-foot wide easement along the southeastern property lines of the Lyndhurst Landfill and the northern portion of the Rutherford Landfill.

NJ Turnpike - The NJ Turnpike western extension is an earthen embankment constructed in 1968 and 1969 through former marshland between the Williams Pipeline embankment and saline marshland along the western shore of the Hackensack River.

Jersey City Aqueduct - The Jersey City Aqueduct consists of two 72-inch diameter steel pipes constructed in 1902 and 1903 on earthen embankment in former marshland. The Jersey City Aqueduct encompasses properties owned by the City of Jersey City (Block 231, Lot 13 and Block 233, Lot 13) and operated by the United Water Company.

Van Winkle Ditch - Van Winkle Ditch is a man-made drainage channel excavated along the northeast edge of the Jersey City Aqueduct to carry marshland flow to Berrys Creek and the Hackensack River. Van Winkle Ditch flows southeasterly along the aqueduct embankment to the Transcontinental Pipeline, then northeasterly along the pipeline to Berrys Creek. With invert elevations of about zero to four feet above mean sea level, Van Winkle Ditch exhibits tidal influence from Berrys Creek and the Hackensack River throughout its length.

Un-named Tributary (hereafter referred to as Viola Ditch) to Berrys Creek - Viola Ditch cuts across the northern portion of the Lyndhurst Landfill. The un-named tributary is connected to Van Winkle Ditch through a culvert located approximately midway along the eastern edge of the Jersey City Aqueduct. The tributary directs storm flow from the landfill and natural flow from

Final
Remedial Investigation Report
For
Lyndhurst Landfill and Rutherford Landfill
Township of Lyndhurst and Borough of Rutherford,
Bergen County, New Jersey

Prepared for:

EnCap GOLF Holdings, LLC
TAMPA, FLORIDA

September 2001

PREPARED BY:

Joseph W. D'Andrea
Senior Technical Leader

Michael E. Benner PG
Project Manager & Geologist

L. ROBERT KIMBALL & ASSOCIATES,
ARCHITECTS AND ENGINEERS, INC.
615 WEST HIGHLAND AVENUE
EBENSBURG, PA

EXECUTIVE SUMMARY

This Remedial Investigation Report (RIR) documents investigations conducted by L. Robert Kimball and Associates, Inc. (Kimball) for EnCap Golf Holdings, LLC of Tampa, Florida on properties planned for development in the Township of Lyndhurst and the Borough of Rutherford, Bergen County, New Jersey. The properties studied include those encompassing the former Lyndhurst Landfill, the former Rutherford Landfill, and partially developed properties along Valley Brook Avenue referred to the Viola Area. Background and site investigations were conducted to determine historical and current land uses, physical and chemical characteristics fill used to construct the current lands, contaminant presence and migration pathways, contaminant impacts to the local environment, preliminary information needed for remedial alternative analysis, design and permitting.

The Lyndhurst and Rutherford Redevelopment Areas consist of filled lands constructed in saline marshland along Berry's Creek and the Hackensack River. Except for two properties located north of Polito Avenue, properties within the study area encompass lands filled between 1940's and 1969 using soil, demolition debris, historic fill, and solid wastes from municipal, industrial, commercial and demolition sources. The fill was placed by end-dump method until reaching open water bodies, ultimately reaching about 93 acres of fill in the Lyndhurst Landfill, about 77 acres of fill in the Rutherford Landfill, and more than 40 acres in the Viola Area. Site investigations observed 3 to 18 feet of waste fill in the Lyndhurst Landfill, 4 to 18 feet of waste fill in the Rutherford Landfill west of the New Jersey Turnpike, 12 to more than 26 feet of waste fill in the Rutherford Landfill east of the turnpike, and 13 to 15 feet of waste in the Viola Area.

Former marshland sediment and vegetation were encountered beneath the fill as a layer of black organic silt and meadow mat 4 to 8 feet thick in the Lyndhurst Landfill, 3 to 10 feet thick in the Rutherford Landfill and 2 to 3 feet thick in the Viola Area. Two areas of organic silt 23 to 27 feet thick were encountered along former stream and river channels. A 90 to over 130 feet thick layer of varved silt and clay was recorded in borings performed in various portions of the project area. Glacial till, shale and sandstone bedrock is present at depths of 110 feet to 150 feet below ground surface, with deeper depths to the north and northwest.

Groundwater was observed as flat, stable shallow water tables in both the Lyndhurst and Rutherford Landfills. A groundwater mound with hydraulic potential of 7 to 11 feet was observed in the Rutherford Landfill East of the Turnpike. Modeling of potentiometric surfaces in the landfills indicate site groundwater migrates outward from the center of the fills, to discharge to nearby surface water bodies. The underlying varved silt and clay layer acts as an aquitard to vertical movement of groundwater into or out of the landfill. Tidal influence was observed in a temporary piezometer and a monitor well, both located within 40 feet of tidally influenced streams. Otherwise, tidal influence was not observed beyond 100 feet of stream edge.

The Hackensack River and tributaries within the immediate vicinity of the site exhibit diurnal tidal changes with measured total range from 6.7 to 7.1 feet in Berry's Creek. The diurnal tidal influence was observed throughout all surface water bodies within the study area. Flood tide was observed to reach all of the surface waters within the study area. Restrictions to flow at culverts constructed in

Fish Creek, Van Winkle Ditch, and Viola Ditch prevent the streams from fully dewatering and reaching the low tide elevations observed in Berry's Creek and the Hackensack River.

Kimball and other project consultants conducted intrusive investigations of the landfills in March and April 2000, December 2000, January 2001, March 2001 and April 2001. Site investigations included soil/fill/debris, groundwater, surface water, sediment, and landfill gas.

Soil/Fill/Debris Investigations. Soil borings and test pits were advanced in a broad coverage of the study area to obtain physical characteristics of the fill, establish the extent of fill, and obtain samples for analysis. To date, boring density is approximately one boring per 3 acres, with at least one sample analysis per every 4 to 5 acres. Site investigations confirmed historical records of random placement of historic fill and solid waste from municipal, industrial, commercial and demolition sources. Soil contamination was confirmed to exceed current NJDEP restricted use criteria throughout the study area. Soil/fill/debris investigations identified dispersed presence of aromatic hydrocarbons, phthalates, polycyclic aromatic hydrocarbons and heavy metals in site fill at concentrations above and below current restricted use criteria. Polychlorinated Biphenyl's (PCBs) were found in a subset of soil samples collected from all areas of study above and below the applicable NJDEP restricted use criteria. The investigations conducted to date have established the general type and extent of fill, the physical characteristics of fill and underlying soil, levels of contamination, and constraints to construction.

Groundwater Investigations. Temporary piezometers were installed and sampled in March/April 2000. Water level sensors were placed in select piezometers and adjoining streams to collect water level changes over 24 hours and during slug tests in concert with manual water level readings in all points. Groundwater samples were collected from temporary piezometers in March/April 2000 and analyzed for general landfill parameters, volatile organics, base neutral organics, and heavy metals. Monitor wells were installed and sampled in December/January and April 2001. Water level sensors were again used in select wells to gather water level changes over 72 hours and perform slug tests. Samples were collect from the wells in January and April 2001 and analyzed for volatile organics, semivolatile organics, pesticides, PCBs, and TAL inorganics.

Groundwater was encountered in saturated fill, underlying organic silt and meadow mat, and in a 120 to over 135 feet thick layer of low-permeability silt and clay underlying the project area. Water level measurements obtained from 24 piezometers and 25 monitor wells installed in the fill identified slight groundwater mounding within the fill resulting in groundwater flowing radially outward toward surrounding surface water bodies.

Results of groundwater analyses identified a dispersed presence of aromatic hydrocarbons, phthalates and heavy metals in site groundwater exceeding current NJDEP Class IIA Groundwater Quality Standards in all portions of the Lyndhurst Landfill and Rutherford Landfill. Polychlorinated Biphenyl's (PCBs) were found in one groundwater sample from Block 233, Lot 11. Groundwater modeling and results of surface reconnaissance and sampling indicate the impacted groundwater migrates out of the landfills into Van Winkle Ditch, Viola Ditch, Berry's Creek, Fish Creek and the Hackensack River.

Surface Water Investigations. Surface water were collected from Van Winkle Ditch, Viola Ditch, Berry's Creek, Fish Creek, and the Hackensack River. Seep samples were collected at significant seeps identified at the stream edge along waste fills. The water samples were analyzed for volatile organics, semivolatile organics, pesticides, PCBs, and heavy metals. Surface water investigations identified aromatic hydrocarbons, polycyclic aromatic hydrocarbons (PAHs), phthalates, and heavy metals in seeps and surface waters surrounding both landfills. Concentrations of organic compounds detected in surface water samples collected from the general flow paths of the streams met SE2 Surface Water Quality Criteria. Concentrations of heavy metals detected in seeps and in open waters upstream and downstream and adjacent to the landfills exceeded current SE2 Surface Water Quality Criteria. The concentrations of contaminants appear of highest concentration in the landfill seeps. The contaminants are similar to background concentrations in the general flow paths of the streams upstream and downstream of the study area, and samples collected by the HMDC throughout the Hackensack River water shed.

Sediment Investigations. Sediment samples were collected from study area stream beds, seep flows, and water ways upstream and downstream of the study area. Results of sediment analyses detected PAH organic compounds and heavy metal analytes in sediments throughout the study area and in the Hackensack River at concentrations exceeding Marine/Estuarine Screening Guidelines. Aromatic hydrocarbons were detected at trace concentrations in sediments located at seeps. The contaminants noted in on-site sediments are similar in type and concentration as contaminants identified in samples collected upstream and downstream of study area. The data also confirm findings reported for areas influenced by Berry's Creek and the Hackensack River in prior studies conducted by New Jersey Turnpike Authority (NJTA) – 1985, New Jersey Sports and Exposition Authority (NJSEA) – 1987, and Hackensack Meadowlands Development Corporation (HMDC) – 1998 and 1982.

Landfill Gas. Gas from the unsaturated zone of the landfill was monitored using real-time volatile organic detectors during intrusive investigations and groundwater sampling events. Landfill gas samples were collected from eight locations on the Lyndhurst Landfill and eight locations on the Rutherford Landfill and analyzed for volatile organic compounds and methane. Results of air sample analyses show presence of a limited number of non-methanogenic compounds at concentrations meeting current health based standards. Methane was reported above detection levels of 0.1% in one sample collected from the northeastern corner of the Lyndhurst Landfill, indicating low gas generation rate in the aged landfills. Positive readings on FID samples collected from underlying meadow mat and organic silt indicate on-going generation of gases by natural decomposition of the natural organic material. Based on landfill gas modeling using assumptions based on investigation findings, landfill gas generation is assumed to continue. Only one location in the Rutherford Landfill – East was confirmed to emit observable amounts of landfill gas.

Ecological Assessment. Results of the environmental investigations were used to evaluate the potential for impacts to environmentally sensitive areas. Aromatic hydrocarbons, PAHs and heavy metals were identified in site soil, and groundwater above one or more regulatory action levels. These same compounds were detected at lower concentrations surface water and sediments of Van Winkle Ditch, Viola Ditch, Fish Creek, Berry's Creek, and the Hackensack River. The study area waterways and associated wetland areas were identified as environmentally sensitive areas within

the area of influence of the landfills. The groundwater to surface water pathway between landfilled waste and potential receptor areas was identified as the primary migration pathway generating risk to receptors.

Conclusions and Recommendations. Results of investigations were used to develop opinions as to the physical and chemical characteristics of the study area, extent of fill, and potential impacts to the local environment. Recommendations were presented for the need or adequacy of investigations relative to remedial alternative analysis and land development.

Soil/Fill/Debris data collected to date confirm presence of soil, rock, historic fill, and various solid waste fills throughout the study area. The extent of fill is verifiable through historical aerial photographs, site reconnaissance, and results of intrusive investigations. The data are adequate for delineation of fill, characterization of fill quality, and distribution of contaminants exceeding restricted use criteria. Any necessary additional investigation would be limited to that necessary for design of proposed engineering controls.

Groundwater data collected to date confirm presence of various volatile, semivolatile and inorganic contaminants in the saturated fill. The types and concentrations of contaminants are evaluated as typical for municipal waste landfills and represent low-concentration, long-term non-point source pollutant loading upon adjoining streams. Due to continued exfiltration of groundwater to adjoining streams, additional groundwater evaluation would be a part of the design of proposed engineering controls.

Surface water quality data collected to date identified a regional and local presence of a limited number of organic compounds and consistent number of inorganic analytes in surface waters. The results of analysis of landfill seeps confirm on-going discharge of low-concentration, low volume contamination to local surface water. Assuming engineering controls will be installed to control this discharge, we recommend that any additional investigation be limited to that necessary for implementation of those controls.

Sediment quality data collected to date also show regional and local presence of a limited number of PAH organics and inorganics in sediment throughout the watershed. Results of sediment analyses for samples collected from the flow path of seeps confirm localized elevation of metals in the concentrated seep discharges. Otherwise, analyses of sediment collected from general stream flow paths within, at the edge and upstream and down-stream of the study area exhibit similar type and quality of contaminants. Analyses performed on sediments collected from marshland between Berry's Creek and the Rutherford Haul road depict consistent deposition of contaminants identified in the Berry's Creek flow, in particular mercury. The contaminants appear to decrease with depth, reaching sediment screening criteria below 1.5 feet from marsh surface, except for mercury. Potential impacts associated with the landfills will be mitigated by designed engineering controls that are to be constructed. Therefore, additional investigation of sediment quality and possible impacts is deemed unnecessary in evaluating remedial alternatives for landfill closure.

Ecological assessments confirmed environmentally sensitive areas adjoining lands containing contaminants of concern with the ability and pathways to migrate from the source area to the receptors. The source area consists of distributed non-point sources generated by fill used in constructing upland in former marshland. The investigations conducted to date appear adequate for establishing the type and levels of impact, which are similar in type and degree as identified throughout the Hackensack River watershed. Engineering controls will be designed and constructed to mitigate impact from the landfills. Therefore, further investigation of ecological impacts is not warranted.

Williams Pipelines (Formerly Transcontinental) – Two steel natural gas pipelines are constructed in an earthen embankment in a 60-foot wide easement along the southeastern property lines of the Lyndhurst Landfill and the Rutherford Landfill. The pipelines were constructed prior to landfill activities and thereby provide a limit of waste.

NJ Turnpike – The NJ Turnpike western extension is an earthen embankment constructed in 1968 and 1969 through former marshland between the Williams Pipeline embankment and the Rutherford Landfill East fill.

Van Winkle Ditch – Van Winkle Ditch is a man-made drainage channel excavated along the northeast edge of the Jersey City Aqueduct to carry marshland flow to Berry's Creek and the Hackensack River. Van Winkle Ditch flows southeasterly along the Jersey City Aqueduct embankment to the Williams Pipeline, then northeasterly along the pipeline to Berry's Creek. With invert elevations of about zero to four feet above mean sea level, Van Winkle Ditch exhibits tidal influence from Berry's Creek and the Hackensack River throughout its length.

Viola Ditch (formerly un-named tributary to Berry's Creek) – Viola Ditch is a manmade ditch constructed to drain areas along Valley Brook Avenue between Van Winkle Ditch and Berry's Creek. The ditch directs storm flow from the Lyndhurst Landfill and the Viola Area to Berry's Creek. The West Branch of the Viola Ditch cuts across the northern portion of the Lyndhurst Landfill and separates Lyndhurst Landfill from the Viola Area, and is connected to Van Winkle Ditch through a culvert located approximately midway along the eastern edge of the Jersey City Aqueduct. The Viola Ditch north Branch extends up into the Viola Area, separating developed properties along Valley Brook Avenue and undeveloped areas along Van Winkle Ditch.

Berry's Creek – Berry's Creek is the primary drainage system within the study area. Original hydrology of the creek was altered prior to 1900 when the NJ Bergen Line culvert was constructed, restricting flow through the creek. In the first half of the 1900's, the Berry's Creek Canal was excavated north of the study area to re-establish creek flow to the Hackensack River. Berry's Creek flow was observed to flow into and out of the study area with the tidal cycle through the Berry's Creek Canal. Berry's Creek separates the Lyndhurst Landfill and the Rutherford Landfill.

Fish Creek – Fish Creek is a natural waterway that drains marshland east and west of the NJ Transit Bergen Line. Fish Creek flows beneath the rail line through a culvert, connecting with the Oritani Marsh northeast of the rail line embankment. Fish Creek passes beneath the Rutherford Haul Road through a collapsing metal culvert at the north edge of the Rutherford Landfill West fill area.

Hackensack River – The Hackensack River flows north to south along the eastern edge of the study area. Tidal flows from the river extend into the study area through Mary Anne's Ditch, Berry's Creek, Fish Creek, Viola Ditch and Van Winkle Ditch.

Valley Brook Avenue – Valley Brook Avenue is the central point of access to the study area.

Lyndhurst Landfill – Potentiometric surface elevations in the Lyndhurst Landfill observed in April and December 2000 ranged between 2 and 3.5 feet above mean sea level (MSL). The mean high water elevation in Berry's Creek is reported to be 2.7 feet above mean sea level (MSL). Therefore the groundwater surface elevations in the Lyndhurst Landfill exhibit little to no hydraulic potential to flow from landfill waste to surface water bodies, except for extended low tide periods. As such, the groundwater within the Lyndhurst Landfill is expected to have low, periodic potential to flow from the centrally located high radially outward to the adjoining surface water bodies. Water seeps were observed along the stream edges surrounding the landfill, indicative of localized channel flow into and out of the waste above the sediment line from the tide. One temporary piezometer located within 100 feet of streams edge in the Lyndhurst Landfill exhibited measurable effects of tidal fluctuations. Remaining wells and piezometers did not exhibit tidal fluctuations. This observation is taken to indicate that the influence of tidal flux across the waste edge is limited to a thin belt around the edge of landfill, and to localized high-flow zones in the belt.

Rutherford Landfill North and Rutherford Haul Road – Water surface elevations measured in temporary piezometers placed in the linear fill areas generally equate to the mean high water in the adjoining waterways. Portions of the fill in these areas are within 75 feet of tidally influenced water.

Rutherford Landfill West – Potentiometric surface elevations in the Rutherford Landfill West observed in April and December 2000 ranged between 2 and 3.5 feet above mean sea level (MSL). The mean high water elevation in Berry's Creek is reported to be 2.7 feet above mean sea level (MSL). Therefore the groundwater surface elevations in the Rutherford Landfill West exhibit little to no hydraulic potential to flow from landfill waste to surface water bodies, except for extended low tide periods. As such, the groundwater within the Lyndhurst Landfill is expected to have low, periodic potential to flow from the centrally located high radially outward to the adjoining surface water bodies. Water seeps were observed along the stream edges surrounding the landfill, indicative of localized channel flow into and out of the waste from the tide above the sediment line.

Rutherford Landfill East – Potentiometric surface elevations observed in April and December 2000 in the Rutherford Landfill east of the turnpike depict a centrally located groundwater mound with upper groundwater surface elevations 17 to 18 feet above MSL. The observed groundwater mound hydraulic potential of 14 to 15 feet above the surrounding surface water elevations indicates groundwater flow from the centrally located high to the adjoining surface water bodies.

Tidal Influence – Numerous groundwater seeps were observed along the stream edges, indicating potential migration of groundwater from the landfilled waste to the surface water bodies and/or an inflow/outflow effect from the tidal surface water bodies. Hydrologic sensors were placed in Berry's Creek, Van Winkle Ditch and in temporary piezometers located in landfilled wastes. As shown in Figures 10A, 10B, 10C and 10D (Volume 2) – Hydrographs, groundwater elevations in landfilled waste within 100 feet of the streams edge along Van Winkle Ditch were observed to vary to some degree with the surface water elevations in nearby surface water bodies. This information indicates that tidal influence from the Hackensack River may extend a limited distance into the landfilled waste. The significantly lower amplitude of change noted in the landfilled waste

BCSA0179560

indicates that movement of groundwater within the landfilled waste is likely similar to estuarine ebb and flood flow.

Groundwater Flow Potential in Waste – Results of slug tests run on monitor wells screened in the waste layers indicate hydraulic permeability to range from 10^{-2} to 10^{-3} cm/sec. As noted above, at least two monitoring points depict tidal influence in the waste, indicating a potential for piping in waste voids along the stream edge. The low, flat groundwater surface elevations in all fills west of the Williams Pipeline indicate low flow potential except at extended low tide periods along a belt adjoining stream edges. The larger hydraulic head in the Rutherford Landfill East increases the potential for groundwater flow out of waste into the adjoining streams.

Groundwater Flow Potential in Organic Silt Layer – As shown in Figures 5, 6, 7, and 8, original marshland material remains as a three to ten feet thick layer of organic silt beneath the landfilled waste. Results of slug tests run on wells screened across the silt and waste interface indicate permeability ranges of 10^{-4} to 10^{-5} cm/sec. As noted above, the hydraulic permeability of the waste was estimated to be 10^{-2} to 10^{-3} cm/sec. Since the wells were screened across the silt and into the waste, the permeability would be a cumulative effect of high-flow waste and low-flow organic silt and meadow mat.

Effective Groundwater Flow – As noted above, groundwater flow in the waste is limited to horizontal flow out of the waste into adjoining streams. The underlying varved clay aquitard prevents vertical groundwater flow. The organic silt and meadow mat remaining beneath the waste fill and in the surface water bodies provides a low-flow media. The organic silt layer does not equate to the underlying varved silt and clay aquitard, nor does is approach the high-flow waste layer. Therefore, the organic silt and meadow mat exhibits a restriction to hydraulic flow. This is supported by the presence of numerous seeps along the landfill edge, which are localized to the waste edge and above the river and stream sediment line. Since there is apparently several orders of magnitude difference between the waste and underlying silt permeabilities, most of the groundwater is most probably released through the waste.

2.3 Study Area Topography

The Lyndhurst and Rutherford landfills are located within a topographic lowland adjacent to the western shoreline of the Hackensack River. The Hackensack Meadowlands extends north and south of the study area, with surface elevations rising gradually to the north. Surface topography rises out of the marshland to local man-made earthen rises within and surrounding the study area, and by natural land surfaces to the west.

The NJ Turnpike was constructed in 1968 and 1969 on man-made fills through marshland using earth and rock from off-site sources. The NJ Turnpike embankment top surface elevations range from a low of 10.5 feet over Berry's Creek to 35.5 feet on the decks of the NJ Transit Bergen and Main Line bridges. The NJ Turnpike embankment slopes down to shallow swales constructed between the embankment and adjoining fills. The swale invert elevations vary from one to three feet above MSL near Berry's Creek to as much as seven to ten feet near the NJ Transit Bergen Line Embankment.

The ditch exhibits tidal influence from Berry's Creek and the Hackensack River throughout its length. Using topographic mapping, an estimated 800,000 cubic feet (six million gallons) of water flows through Van Winkle Ditch each tidal cycle (twice each day).

Tidal measurements were obtained for a National Oceanographic and Atmospheric Agency (NOAA) tide gage installed in a tributary to the Hackensack River identified as Berry's Creek No. 8E. Copies of the tide gage data are provided in Appendix C (Volume 3) with Tidal Study Data and in Table 3 – Hydrologic Data for Berry's Creek. A recent vertical survey of the tide gage benchmark elevation was obtained to convert tide gage measurements to the current NAVD88 elevations.

Based on the 1977 tidal measurements adjusted to 1988 North American Vertical Datum, the tide in Berry's Creek and the Hackensack River adjoining the site ranges between a mean low water elevation of about negative 3.2 feet and mean high water of about 2.66 feet (NOAA, 1977).

Per the 1993 NJDEP Flood Plain study, as recorded in the current Federal Emergency Management Agency (FEMA) flood plain maps for the area, the FEMA 100-year flood plain elevation for the area is about 7.6 feet NAVD88 (8.66 feet NGVD29). Since the surface water bodies surrounding the landfills are tidally influenced tributaries of the Hackensack River, the project area does not influence the regulated flood way (FEMA, 1993).

The northern half of Van Winkle Ditch is connected to Viola Ditch (formerly called an un-named tributary to Berry's Creek) that bisects the Lyndhurst Landfill. The tributary is tidally influenced through its full length, discharging to Berry's Creek twice a day through a dual culvert under Valley Brook Avenue.

2.5 Well Search

A well search was obtained from the NJDEP Bureau of Water Quality. Another well search was provided along with the Environmental Data Base Research obtained from public and privates sources through Environmental Data Research, Inc. Both well searches indicate that no public or private wells are located within a one-mile radius of the site. The two privately owned production water wells and one public water supply well were reported within a one and one-half mile radius of the site. Review of the NJDEP Bureau of Water Allocation Well Record database by Kimball personnel showed no record of these two privately owned production wells. Conversations with NJDEP personnel indicated that the database might not be inclusive of all wells drilled within the project area. If the historic well records were not prepared completely or misinformation was provided the data may not have been included into the database. Well identified in this search are shown on Figure 11 – Existing Wells Search.

A review of the NJDEP Water Allocation database by Kimball personnel did however indicate the presence of a production well at the Sika Chemical Corporation facility located along Valley Brook Avenue. The well was reportedly installed in December 1966 to a depth of 302 feet below ground surface. Well records show the Sika well to be completed within the red shale of the

BCSA0179564

3.0 RESULTS OF PREVIOUS INVESTIGATIONS

3.1 NJ Turnpike Authority Environmental Impact Statement Technical Studies for Turnpike Widening (NJTA 1985)

Louis Berger & Associates (LBA), under contract with the NJTA, conducted surface water and sediment sampling and analysis of Berry's Creek and the Hackensack River in 1985 for Technical Studies for an Environmental Impact Study (EIS) for the NJ Turnpike Widening Project. Copies of sections of the EIS are provided in reference documents.

3.1.1 NJTA EIS Surface Water Investigations – 1985

LBA collected 19 surface water samples from the project vicinity, with 12 samples in the Hackensack River, two samples from Kingsland Creek waterways, one sample from Berry's Creek, and four samples from Berry's Creek Canal. The water samples were analyzed for nitrogen, phosphates, chlorides, and priority pollutant metals. The results of analyses are presented in Table 4 – Surface Water Analysis Results – NJTA EIS 1985.

The results of analyses are indicative of saline water in urban conditions as expected for the Hackensack River. Due to reporting of results in milligrams per liter (mg/L), the incidence of reported non-detection of metals is greater than expected for the local environment.

3.1.2 NJTA EIS Sediment Investigations – 1985

LBA collected sediment samples from exposed stream/river bed and marshland in and adjacent to Berry's Creek, Berry's Creek Canal, Kingsland Creek, Kingsland Ditch and the Hackensack River. The sample locations in and adjacent to the current study area are presented on Figure 14 – Sample Location Map and in the original report provided with the previously submitted Reference Documents Package submitted with the Avon Landfill Remedial Investigation Report. The results of analyses performed on the sediment samples are presented in Table 5 – Sediment Analysis Results – NJTA EIS 1985.

The results of analyses indicate consistent presence of inorganic constituents in sediments in the Hackensack River and tributaries. In general, the results of analyses indicate regional impacts from urban runoff and industrial discharges resulting in region-wide inorganic contamination at concentrations above current Marine/Estuarine Sediment Screening Criteria Effects Range Low. Lead is recurrently observed above Effects Range Medium. Mercury is a reported contaminant of concern in Berry's Creek and Berry's Creek Canal north of the study area. Sediment quality is significantly better in Kingsland Ditch. The results are similar between samples collected from exposed sediments and in nearby marshland sediments.

3.2 NJ Sports and Exposition Authority – Wetland Assessment for Proposed Sports Stadium (NJSEA 1987)

The NJ Sports and Exposition Authority (NJSEA) conducted wetland assessments in 1987 in researching properties proposed for a baseball stadium. Geotechnical, surface water, and sediment investigations were included in the study, which resulted in data pertinent to the Lyndhurst and Rutherford Landfill study. The Wetland Evaluation and Mitigation Report For The Proposed Baseball Stadium prepared by Malcolm Pirnie, Inc. and dated June 1987 is provided in the reference documents previously provided with the Avon Landfill Remedial Investigation Report.

3.2.1 NJSEA Surface Water Investigation – 1987

Malcolm Pirnie collected 15 surface water samples from surface water bodies and landfill seeps surrounding the Avon and Lyndhurst Landfills. Sample locations W1 through W15 are presented in the original reference document.

Sample locations W1, W3 and W14 were in or near seeps from the east edge of the Lyndhurst Landfill flowing into Berry's Creek. Locations W2 and W13 were from surface seeps in the southeast corner of the Lyndhurst Landfill. Locations W4, W10 and W11 were from waters in or adjacent to Viola Ditch in the north section of the Lyndhurst Landfill. Locations W5 and W9 were from the north half of Van Winkle Ditch. Locations W7 and W8 were from Bucks Creek and outside of the Lyndhurst Landfill area of study. Locations W6 and W12 were from another un-named tributary to Berry's Creek north of the Lyndhurst Landfill area of study. Location W15 was from Berry's Creek east of the NJ Turnpike.

Results of analyses performed on surface water samples collected in 1987 are presented in Table 6 – Surface Water Analysis Results – NJSEA 1987 and the original report provided with the previously submitted reference documents. Results exceeding surface water quality criteria also are presented on Figure 12 (Volume 2) – Historic Surface Water – Lyndhurst - Organics and Inorganics. In general, the results of analyses indicate presence of organic compounds and inorganic analytes typical of the urban environment of the Hackensack River basin.

Target compound list (TCL) volatile organics found in the surface water samples include acetone, methylene chloride, benzene, toluene, chlorobenzene, ethylbenzene, and total xylenes. Acetone, a common laboratory contaminant, was invalidated due to the method blank contamination; while methylene chloride was detected at a low concentration but is also a common laboratory contaminant. Benzene was found in trace amounts to 200 ug/L, toluene and chlorobenzene were detected from trace amounts to 460 ug/L, ethylbenzene was detected from trace amounts to 1600 ug/L, and 200 ug/L, respectively, and total xylenes were found to have concentrations from trace amounts to 6,600 ug/L. Four other volatile organics were detected at trace amounts.

3.2.2 NJSEA Sediment Investigations – 1987

The NJSEA collected and analyzed sediment samples from locations W1 through W6. Sediment analysis results are presented in Table 7 – Sediment Analysis Results – NJSEA 1987 and original data tables in the reference document.

The sample analysis results indicate presence of heavy metals, aromatic hydrocarbons and PAHs at concentrations exceeding Marine/Estuarine effects ranges. Pesticides and PCBs were not detected.

3.3 USEPA Site Inspection of Avon Sanitary Landfill (USEPA 1990)

NUS Corporation, under contract with the US Environmental Protection Agency (USEPA), completed site investigations in 1990 under the USEPA Superfund Program. The Site Inspection Report, with sample and analysis documentation, is provided in project reference documents previously submitted with the Avon Landfill Remedial Investigation Report. NUS collected two surface water samples, NJC2-SW1 and NJC2-SW2, from Van Winkle Ditch, which are relevant to the Lyndhurst Landfill study area.

3.3.1 USEPA Surface Water Investigations – 1990

Data results are presented in Table 8 –Surface Water Analysis Results – USEPA 1990 and Figure 12 – Historic Surface Water - Lyndhurst – Organic Compounds and Inorganic Analytes. Sample NJC2-SW1 was collected in the northern half of Van Winkle Ditch. Sample NJC2-SW2 was collected in the southern end of Van Winkle Ditch along the Transcontinental Pipeline. Both samples were analyzed for TCL+30.

As shown in Table 8 – Surface Water Analysis Results – Block 220, arsenic (J-estimated value – 29.5 micrograms per liter-ug/L) and manganese (640 and 358 ug/L) were detected above current NJDEP SE2 Surface Water Standards. Bis(2-ethylhexyl)phthalate (14ug/L) was reported above surface water standard. Remaining inorganic and organic compounds in the TCL+30 scan were not detected or detected at concentrations below the Surface Water Standard (USEPA, 1990).

3.4 Neglia Engineering Associates – 1990

In August 1990, Neglia Engineering Associates (Neglia) produced an Engineering Report for Township of Lyndhurst for development of the Lyndhurst Municipal Ball Fields. The Lyndhurst Ball Fields are located east of Valley Brook Avenue, in Block 231, Lot 11. Table 9 – Soil Analysis Results – Lyndhurst Ball Field SI Report – 1990 presents results of analyses conducted on six surface soil samples collected from the lot. Sample locations 1 through 6 are not mentioned in the report dated August 31, 1990; nor are they shown on the sample location map.

The results of soil analyses indicate presence of several heavy metals including antimony, arsenic, copper, lead, nickel, and zinc and the PCBs in soils in the lot. At least one metal species

Ditch, Berry's Creek, Fish Creek, and drainage ditches along the Rutherford access road indicate that groundwater exfiltration within the tidal range is dominated by diurnal surface water flow into and back out of the landfill at water's edge.

The ten to 12 feet of hydraulic head observed in the Rutherford Landfill east of the turnpike provides a significant hydraulic barrier to surface water infiltration and a driving force for groundwater exfiltration. Therefore, groundwater exfiltration can be assumed to be dominated by migration of infiltrating rainwater at this landfill only.

4.2.3 Lyndhurst Landfill Surface Water Investigations

Kimball conducted surface water investigations in March 2000, December 200 and April 2001. Kimball collected and analyzed 33 surface water samples from within, adjacent to and outside of the project area.

Surface water samples were collected in accordance with the project RIWP and QAPP and the NJDEP Field Sampling Procedures Manual. Field sampling and documentation were performed in accordance with the QAPP, prepared to comply with the Technical Requirements for Site Remediation 7:26E-3.6 through 3.9. Samples were collected at low tide to increase the probability that each sample contained impacted groundwater from the landfills. Sample bottles without preservatives were filled by direct submersion into the water body. Sample bottles with preservative were filled from the unpreserved bottles by carefully transferring the sample into the appropriate bottles. Volatile organic analytes (VOA) vials were filled from the unpreserved bottles leaving no headspace or air bubbles.

Field parameter measurements (pH, specific conductivity, dissolved oxygen and oxygen reduction potential [ORP]) were collected for all surface water and seep samples using a YSI Water Quality Meter.

Surface water sample locations are shown on 14C – Surface Water/Seep/Sediment Sample Location Map.

4.2.3.1 Lyndhurst Landfill Surface Water Sampling - March 2000

Six surface water samples were collected in March 2000 from Van Winkle Ditch (LSW1, LSW2, ASW4) and Viola Ditch (LSW3, LSW4, LSW5) surrounding the Lyndhurst Landfill. Samples collected were analyzed for PP VOCs and PP Base Neutral Organic Compounds, PP Metals, COD, BOD, chlorides, pH, nitrate nitrogen, TS and TSS. Results of analyses are presented in tables:

- Table 87 – Surface Water Analysis Results – Lyndhurst Organics – March 2000.
- Table 88 – Surface Water Analysis Results – Lyndhurst Inorganics and Miscellaneous Parameters – March 2000.

Analytical results compared to criteria are shown on Figure 28 – Surface Water Results Above Criteria – Lyndhurst – March 2000.

Significant Events or Seasonal Variations Affecting Sampling or Analysis

Flood tide from the Hackensack River reaches all portions of the study area. Therefore, surface water collected from those locations contained water from sources external and internal to the landfill study area. The surface water samples were collected at low tide to maximize the percentage of impacted groundwater in the surface water samples.

4.2.3.2 Lyndhurst Landfill Surface Water Sampling - December 2000

Nine surface water samples were collected in December 2000 from locations in Van Winkle Ditch (L-4, L-6), Viola Ditch (L-9), an Un-named Tributary to Berry's Creek (L24), Berry's Creek (L-8, L-25), and the Hackensack River (L-26). Sampling Logs are presented in Appendix B (Volume 3). Field measurements included: pH, conductivity, dissolved oxygen, oxidation/reduction potential, and temperature.

Locations, L24, L25, and L26 were selected to assess conditions in the surface water bodies flowing into and out of the study area.

Surface water samples collected in December 2000 were analyzed for TCL volatiles + 10, TCL semi-volatiles + 15, pesticides, PCBs, TAL metals, ammonia nitrogen, nitrate nitrogen, total kjeldahl nitrogen (TKN), chloride, COD, TOC, TS, TSS. Results of analyses are presented in tables:

- Table 89 – Surface Water Analysis Results – Lyndhurst TCL volatiles – December 2000.
- Table 90 – Surface Water Analysis Results – Lyndhurst TCL Semi-Volatiles – December 2000.
- Table 91 – Surface Water Analysis Results – Lyndhurst Pesticide/PCBs – December 2000.
- Table 92– Surface Water Analysis Results – Lyndhurst Inorganics – December 2000.

Surface water analytical results in comparison to criteria are summarized on Figures 29 – Surface Water and Seep-Organic Compounds and Inorganic Analytes Above Criteria – Lyndhurst – December 2000.

Significant Events or Seasonal Variations Affecting Sampling or Analysis

Diurnal tidal flows in all streams within the study area fully inundated exposed sediment to depths of two to four feet. Therefore, surface water sampling was limited to the two to four hour period before and after low tide so that the surface water sample collection could coincide with the collection of seep and sediment samples at the same location.

The inorganic analytes arsenic, manganese and mercury were reported at concentrations above SWQC in all portions of the study area. Comparison of analytical results of samples collected within the Lyndhurst Landfill study area and those collected out-side of the study area indicate inorganic analytes within the study area are similar to those reported for regional surface water quality.

The data tables also present results of analyses performed on water seeping out of the landfill face into adjoining surface waters. The seeps appeared to slow and stop at low tide, indicating little to no active discharge from the main groundwater mass within the waste fill. Instead, the data indicate that the seeps represent surface water flow into and out of the landfill mass at the stream sediment to waste fill interface. In most cases, this location represents a 2 to 4 feet high face of exposed fill at the top of stream sediment.

In general, the results of analyses performed on landfill seep samples show organic contamination similar to types and concentrations noted in adjoining surface water. As shown in the enclosed data tables, the inorganic constituents aluminum, arsenic, iron, lead, manganese, chloride and ammonia nitrogen consistently were detected at concentrations exceeding the concentrations in the river and stream samples, by one to two orders-of-magnitudes.

5.3.4 Lyndhurst Landfill Sediment Investigations

Sediment samples were collected from stream sediments adjoining the Lyndhurst Landfill. The results of analyses presented in enclosed data tables are compared with the Marine/Estuarine Sediment Screening Guidelines Effects Range Low (ERL) and Effects Range Medium (ERM), as well as the NJDEP restricted use criteria.

In general, volatile organic compounds were not detected in site sediment samples. Methylene chloride was detected in three samples above the ERL, however, methylene chloride was frequently found in laboratory and trip blanks and has been dismissed as a probable laboratory contaminant.

Several semi-volatile compounds were detected above ERL and ERM criteria in one sample (V8) collected from the northern end of Van Winkle Ditch. Otherwise, a limited number of PAHs were detected below criteria in the Lyndhurst Landfill sediment samples.

No pesticide or herbicide compounds were detected in the Lyndhurst Landfill sediment samples.

The PCB Arochlors 1254 and 1260 were reported at concentrations above the ERL and below the ERM in one sediment sample from the Viola area (V7SD1D), otherwise PCBs were absent from the Lyndhurst Landfill sediment analysis results. The duplicate of the V7 sample V7SD1 did not report detection of PCBs, raising doubt as to the presence and/or average distribution of the compounds in the sediment.

The inorganics arsenic, cadmium, chromium, copper, lead, mercury, silver, thallium and zinc were all reported above the ERL criteria and recurrently above the ERM criteria in site sediment.

The mean lead concentration (4097 mg/kg) and maximum lead concentration (17200 mg/kg) exceeds all criteria. Since the mean concentration for lead presence in site soil exceeds one or more screening criteria, lead is identified as a CPEC.

- The mean mercury concentration (3.1 mg/kg) and maximum mercury concentration (17.6 mg/kg) exceed all criteria. Since the mean concentration for mercury presence in site soil exceeds one or more screening criteria, mercury is identified as a CPEC.

- The mean nickel concentration (178 mg/kg) and maximum nickel concentration (1190 mg/kg) exceeded all criteria. The minimum nickel found in a sample was 11.4 mg/kg. As such, nickel is identified as a CPEC.

- The mean silver concentration (3.48 mg/kg) is above the sediment ERL. The maximum silver concentration (15.8 mg/kg) exceeds both of the sediment screening criteria. Since the mean concentration of silver in site soil samples is above two of the three screening criteria, silver is identified as a CPEC.

- The mean zinc concentration (1376 mg/kg) and maximum zinc concentration (3740 mg/kg) exceed all criteria. The minimum zinc found in a sample was 37.1 mg/kg. As such, zinc is identified as a CPEC.

- The PAH compounds benzo(a)anthracene, benzo(a)pyrene, benzo(ghi)perylene, benzo(k)fluoranthene, chrysene, fluoranthene, phenanthene, and pyrene exceed at least one sediment screening criteria in site soil. As such the noted compounds are identified as CPECs.

- The Aroclors 1254 and 1260 were detected in site soil at concentrations less than soil (2 mg/kg) screening criteria but greater than the sediment ERL (0.023 mg/kg) screening criteria. As such, PCBs are identified as CPECs in the additional properties.

6.1.2 Contaminants in Site Surface Water and Seeps

Surface water samples were collected from seeps flowing from landfill waste and the main flow streams of Van Winkle Ditch, Viola Ditch, Berry's Creek, Fish Creek, and the Hackensack River. Samples collected in March 2000 were selected representative of mainstream flows of the waterways noted above. Samples collected in December 2000 were located representative of active landfill seeps and stream flow at the point seepage entered the noted waterways.

The primary sources of contaminants affecting site surface water include contaminant loads of Berry's Creek and the Hackensack River, groundwater seepage from site landfills, and runoff from industrial, residential and transportation development. In addition, contaminated sediment carried into the study area with Berry's Creek and the Hackensack River over the past 100 years generates an on-going in-stream source of impact to site surface water.

6.1.2.1 Aqueous Inorganic Constituents

Table 6-4 presents inorganic constituents recurrently detected in the surface water and seep samples collected in 2000/2001 (see Tables 6-3) and the USEPA Acute and Chronic Saline Estuarine Criteria for the protection of aquatic organisms (FR 1998: 63(237) pg. 68357). Background concentrations shown in the tables are averages of analyses performed by the HMDC on samples collected from Berry's Creek and the lower section of the Hackensack River on a quarterly basis from 1993 to 1999 (Table 12).

Table 6-4
Organic and Inorganic Concentrations in Surface Water versus Ecological Screening Criteria

Analyte / Compound	Range (ug/L)	Surface water Mean (ug/L)	Background Mean and Maximum (ug/L)	EPA Acute Surface Water Criteria (ug/L)	EPA Chronic Surface Water Criteria (ug/L)	NJDEP Surface Water Standards (ug/L)
Inorganics						
Arsenic	ND – 117	12.6	--	69	36	0.136
Cadmium	ND – 30.8	2.5	17.3 (148.1)	42	9.3	--
Chromium	0.85 – 1280	88.8	16.2 (229.7)	--	--	3230
Copper	ND – 1370	112	20.5 (156.6)	7.9	5.6	--
Lead	ND – 1660	174	144.5 (1379.2)	210	8.1	--
Mercury	ND – 7.0	1.1	--	1.8	0.025	0.146
Nickel	4.2 – 252	30.6	91.4 (693)	74	8.2	3,900
Selenium	ND – 14.8	4.5	--	290	71	--
Zinc	1.0 - 3590	384	43.7 (279.5)	90	81	--

NOTE: 1 – Mean values were calculated from surface water samples collected quarterly from 1993 to 1999 at 14 locations in the area.

The preceding table provides the regional mean background concentrations of cadmium, chromium, copper, lead, nickel, and zinc from 1993 to 1999 developed as the mean concentration of the HMDC long term sampling results. In review of the HMDC data, we observed an obvious improvement in surface water quality for chromium, copper, and zinc in the 1999 data as compared to the 1993 through 1998 data. For example, the maximum zinc concentrations in the Hackensack River and Berry's Creek samples for 1993 through 1998 ranged from 81 ug/L to 253 ug/L and for 1999 ranged from 44 ug/L to 190 ug/L. Also, we observe significant variation in concentrations between annual results, indicating temporal variation in constituent concentrations. The following provide compound specific evaluations.

- The maximum arsenic concentration (117 ug/L) exceeds all criteria. The mean arsenic concentration (12.6 ug/L) exceeds the NJDEP Surface Water Criteria (0.136 ug/L) but is below the EPA Acute and Chronic Surface Water Criteria (69 ug/L and 36 ug/L, respectively). There were only two out of 42 samples analyzed that exceeded the criteria. Therefore arsenic is evaluated not to be a CPEC in water.

BCSA0179635

- The mean concentration for cadmium (2.5 ug/L is less than the EPA Acute Criteria (42 ug/L) and EPA Chronic Criteria (9.3 ug/L). Maximum cadmium results exceeded the EPA Chronic Criteria but not the EPA Acute Criteria (42 ug/L). The background mean for cadmium is 17.3 ug/L, which is greater than the mean and the EPA Chronic Surface Water Criteria (9.3 ug/L). Therefore, cadmium is evaluated not to be a CPEC for water.

- The mean concentration for chromium (88.8 ug/L) and the maximum concentration for chromium (1280 ug/L) are below the NJDEP Surface Water Standard. Therefore, selenium is evaluated not to be a CPEC for water.

- The mean (112 ug/L) and maximum (1,370 ug/L) concentrations for copper are greater than the EPA Acute Criteria (7.9 ug/L) and the EPA Chronic Criteria (8.1 ug/L). Since the mean and maximum concentrations of copper also exceed the background concentration of 20.5 ug/L, copper is retained as a CPEC in water.

- The mean concentration for lead of 174 ug/L is greater than the EPA Chronic Criteria of 8.1 ug/L. The maximum concentration for lead of 1660 ug/L is greater than the EPA Acute Criteria of 210 ug/L. Since the mean concentration of lead in site discharges meet both the background 144 ug/L and the EPA Acute Criteria, lead is evaluated not to be a CPEC in water.

- The mean concentration (1.1 ug/L) for mercury exceeds the EPA Chronic Criteria (0.025 ug/L) and the NJDEP Surface Water Standard (0.146 ug/L). The maximum mercury concentration (7.0 ug/L) exceeds the EPA Acute Criteria (1.8 ug/L), the EPA Chronic Criteria and the NJDEP Surface Water Standard. Therefore, mercury is retained as a CPEC for water.

- The mean concentration for nickel of 30.6 ug/L is greater than the EPA Chronic Surface Water Criteria of 8.2 ug/L. The maximum concentration for nickel of 252 ug/L is greater than the EPA Acute Surface Water Criteria of 74 ug/L. Since the mean concentration of nickel is less than the background mean for nickel of 91.4 ug/L, nickel is evaluated not to be a CPEC for water.

- The mean concentration of 4.5 ug/L and the maximum concentration 14.8 ug/L for selenium are below all criteria. Therefore, selenium is evaluated not to be a CPEC for water.

- The mean concentration of zinc (384 ug/L) and maximum zinc concentration (3590 ug/L) exceeds the EPA Acute Criteria (90 ug/L) and EPA Chronic Criteria (81 ug/L). The mean concentration of zinc is greater than the EPA criteria and the background concentration of 43.7 ug/L. Therefore, zinc is retained as a CPEC for water.

For the constituents dissolved in water seeping from the landfill to have a measurable impact on the receiving water body, the volume of the discharge must be of a significant mass in relationship to the receiving water body. Constituent concentrations in surface water did not

substantially exceed surface water ecological screening criteria for protection of aquatic organisms, nor is the mass of contaminants significant in comparison with the tidal flow of Berry's Creek and the Hackensack River. Therefore, the inorganic constituents detected in surface water within the study area are evaluated not to pose a significant threat to ecological receptors.

6.1.2.2 Aqueous Organic Constituents

In general, organic contaminants were not consistently detected in surface waters within the study area. Methylene chloride was found to be above criteria but not enough to account for more than being a laboratory contaminant. Only one semivolatile compound, benzo(a)anthracene (estimated 1 ug/L), was reported above criteria (0.031 ug/L). There were no pesticides or PCBs reported above criteria. Therefore, organic contamination seeping from the landfills is evaluated not to pose a significant threat to ecological receptors.

6.1.3 Contaminants in the Site Sediment

Sediment samples collected during the March 2000 sampling event were selected representative of general conditions in Van Winkle Ditch, Viola Ditch, Berry's Creek and Fish Creek. Sediment samples collected during the December 2000 sampling event were selected representative of sediments impacted by seepage from the landfills, plus sediments at project limits upstream and downstream of Berry's Creek.

6.1.3.1 Sediment Inorganic Constituents

In Tables 6-5 and 6-6 the mean and maximum concentrations of inorganics and organics detected in sediment samples collected at each of these landfills were compared to ecological screening criteria prepared by NJDEP for Lyndhurst and Rutherford Landfills, respectively. These values are based on the *Guidelines for the Protection and Management of Aquatic Sediment Quality in Ontario* published by the Ontario Ministry of the Environment in 1993. The Lowest Effects Levels (LEL) indicates concentrations at which adverse benthic impact may begin to occur. Water column species and wildlife are potential risk via biomagnifications if site-specific sediment concentrations of mercury are at or above the LEL. Analytes/compounds without screening criteria or those not commonly detected (less than 25 percent of the samples) are not listed on the table. All sediment sample results can be found in the analytical tables of this report.

7.3.5 Landfill Gas Investigation

Results of real-time gas detection conducted during boring activities within the haul road and north nodes did not report landfill gas. Individual samples or analyses were not conducted on soil gases from the haul road or north nodes. The lack of indications of landfill gas generation along the haul road coincides with significant presence of inorganic demolition debris and lower presence of organic municipal waste.

7.4 Lyndhurst Landfill

The following present the conclusions and recommendations for the Lyndhurst Landfill, described as filled lands between Berry's Creek and Van Winkle Ditch.

7.4.1 Soil/Fill/Debris Investigation

Extent of Fill. Historical aerial photographs provide clear depiction of fill activities over time. Site investigations verified the horizontal extent of fill evident in historical and current aerial photographs. Municipal landfill operations filled former marsh adjoining Berry's Creek and Van Winkle Ditch, resulting in solid waste fill to waters edge. Observations from 71 soil borings and 8 test pits completed by Kimball and others and distributed throughout the landfill have verified the vertical extent of fill to be about 13 to 18 feet within the center of the landfill and 3 to 7 feet along the edge of the fill. The solid waste lies atop original marsh meadow mat, organic silt, and varved silt and clay. The background research and site investigations conducted to date provide sufficient information to delineate the horizontal and vertical extent of fill.

Type of Fill. Waste fill visible at ground surface and encountered in the soil borings distributed over the full extent of fill include solid wastes typical of municipal waste landfill operations accepting mixed wastes from urban areas. No discrete or large masses of industrial wastes were encountered or are indicated by levels of contamination.

Contaminants of Concern. The contaminants detected in site soil typify municipal waste with incidental presence of cinders and ash and industrial wastes. A limited number of volatile organic compounds were detected below restricted use criteria, with no defined pattern or source. Polycyclic aromatic hydrocarbons were consistently detected at concentrations typical of incidental presence of historic fill mixed in with the solid waste. The PCBs, Aroclor 1248 and 1254, were detected in roughly 12% of the landfill soil samples at concentrations below NJDEP restricted use criteria. Heavy metal constituents were detected throughout the landfill at concentrations typical of municipal waste and historic fill. Metals exceeding restricted use criteria included lead in 28 of 39 samples, plus copper in 13 of 39, barium in 12, zinc in 10 arsenic in 8, nickel in 7, antimony in 6, and cadmium, thallium and vanadium in 2 of 39 samples collected from March 2000 to March 2001. Although investigations uncovered visible indications and reports of co-mingling of solid wastes from industrial and commercial sources, the levels of heavy metals and organic compounds in the soil analyses indicate the municipal solid waste stream dominates site fill. Although the number of soil analyses varies from the

density recommended in N.J.A.C. 7:26E, the consistent observations in soil borings and site reconnaissance, together with consistent results of analyses completed to date appears sufficient to confirm the types and concentrations of contaminants typical for co-mingled solid waste from municipal waste flow streams.

7.4.2 Groundwater Investigations

Physical Characteristics of Groundwater. Results of water level measurements in temporary piezometers and monitor wells distributed over landfill indicate presence of groundwater throughout the waste fill at approximately the same surface elevation as the surrounding marsh and stream levels. Results of slug tests and groundwater surface elevation measurements indicate a slight potential exists for groundwater flow following storm events when rainwater freely percolates into the waste fill and raises local groundwater sufficiently to create a temporary hydraulic mound in the center of the landfill. The data indicate rainwater freely infiltrates the waste mass and is able to flow through the waste to surface water bodies that surround the landfill. Groundwater appears to reach ground surface in depressions portions of the landfill that have subsided to below 4 feet elevation, indicating potential for surface exfiltration and runoff during extreme storm events. Long-term groundwater monitoring within the landfill did not show a significant influence of tidal fluctuations along Van Winkle Ditch, Berry's Creek or Viola Ditch. One location along the Viola Ditch exhibited tidal impacts, indicating potential influence within the outer edge of fill. The face of landfill waste along the streams was limited to a 2 to 3 feet vertical face above broad organic silt streambeds. Landfill seeps also were limited to the exposed face of waste, indicating interaction between site groundwater and local surface water is constrained by the low-permeability silt streambed. The consistent characteristics and differences between the waste fill, edge of fill, and underlying silt and clay layers provides a concise definition to groundwater flow potential and pathways within the landfill.

Groundwater Quality. A limited number of aromatic hydrocarbons, polycyclic aromatic hydrocarbons and phthalates were detected in site groundwater at concentrations below criteria. All organic compounds detected on site in 2000 and 2001 sampling met GWQS with the exception of benzene in one sample. Benzene was detected in 1 of 25 samples at concentrations above the GWQS. Chlorobenzene, ethylbenzene and xylenes were detected in 1 of 25 samples collected in 2000 and 2001 at concentrations below GWQS. These same compounds were detected in shallow wells sampled by others between Viola Ditch and Valley Brook Avenue in 1999. Methane was detected dissolved in the groundwater in the center of the fill, indicative of continued active decomposition of organic matter within the center of the landfill mass. No herbicides, pesticides or PCBs were detected in site groundwater. Lead was reported above the GWQS in 18 of 18 samples. The inorganic constituents aluminum, arsenic, iron and manganese were recurrently detected at concentrations within one magnitude above GWQS. Antimony, chromium, copper, mercury, nickel zinc and cyanide were found in less than five of the 18 samples. Arsenic, cadmium, lead, mercury, nickel and zinc were reported above GWQS in unfiltered samples but below GWQS in filtered samples, indicating presence on suspended solids in groundwater.

7.4.3 Surface Water and Seep Investigation

Seepage is limited to exposed waste above the less-permeable silt and clay sediments along the stream banks, indicating groundwater flow out of the landfill into local surface water is limited to extreme high tide and following storm events when the groundwater pool rises above the seep elevations. Except for phthalates below SWQS in 1 to 6 of the 25 surface water samples, volatile organic compounds, semi-volatile organic compounds, pesticides, or PCBs were not detected in the surface water samples collected from Berry's Creek, Van Winkle Ditch, and Viola Ditch and at the outer edge of landfill proximity (R25 and L25). The inorganic analytes arsenic (13 of 25 samples), mercury (24 of 25 samples) and manganese (6 of 25 samples) were detected above SWQS. Comparison between the seep qualities, adjoining surface water quality and site groundwater quality reveals that the seepage represents a mix of surface infiltration water and groundwater flowing out of the landfill mass at low tide. Except for a limited number of seeps located along Berry's Creek, where waste was exposed the full depth of creek tidal change, the seeps located near the high tide elevation and above creek sediments dried up before return of high tide, which indicates the daily seepage is generated by the periodic infiltration and exfiltration of stream water through the 2 to 3 feet of exposed waste along the stream bank. Once in the creek, the contamination is indistinguishable from the background water quality associated with Berry's Creek and the Hackensack River upstream of the site (BK1 and BK2).

Since the data and site observations confirm seepage consisting of a mix of groundwater flowing out of the landfill mass and surface water returning at low tide, it is our opinion that site groundwater quality represents worst-case quality of landfill seepage. As such, the exfiltration of landfill seepage represents an on-going non-point source of pollutant loading upon the adjoining water-ways.

7.4.4 Sediment Investigation

Volatile, pesticide, and PCB organic compounds were not detected in the sediment samples collected along the landfill edge or immediately upstream and downstream of the landfill. A limited number of PAHs were detected in 3 of 15 samples at concentrations meeting sediment screening criteria. The metals arsenic, cadmium, chromium, copper, lead, mercury, silver and zinc were detected at concentrations exceeding ERL criteria in 60% to 80% (depending on the constituent) of the samples collected in sediment along visible seeps from the landfill in Berry's Creek, Van Winkle Ditch and Viola Ditch. The concentrations noted in the assumed worst-case sediments are similar in concentration to sediments sampled at the edge of the study area (R24, R25, L25) and upstream in Berry's Creek (BK1) outside of the study area. The concentrations of these same metals were noticeably higher in sediment samples collected from Berry's Creek and the Hackensack River (BK1, BK2, BK3, R26, and L26) outside of the study area.

7.4.5 Landfill Gas Investigation

Real-time monitoring of gases within wells, vents and burrows indicate compounds detectable by flame ionization dominate compounds detected by photo-ionization, which usually represents increased presence of gases generated by natural biodegradation. Results of analysis of grab

samples of landfill gas at locations LP-1, LP-2, GW6a and GW-9 identified trace concentrations of a variety of industrial compounds typical of aerosols, paints and fuels. The concentrations noted were all below health-based standards. The data indicate the potential exists for continued discharge of landfill gas containing low-level organic compounds.

7.5 Viola Area

The following present the conclusions and recommendations for the properties identified for possible development in the northern extent of the Lyndhurst Landfill.

7.5.1 Soil/Fill/Debris Investigation

Extent of Fill. Historical aerial photographs depict clearly the timing and extent of fill activities throughout the Viola Area. Site reconnaissance and subsurface investigations verified the horizontal extent of fill identified in the aerial photographs. Soil borings distributed over the properties confirmed various fills to be about 13 to 15 feet. The edge of former marshland is evident as meadow mat and organic silt beneath properties located south of Polito Avenue. Properties located north of Polito Avenue appear excavated from naturally occurring glacial sediment and partially filled with historic fill and construction soil to level the land. Properties south of Polito Avenue appear to have been constructed by filling former marshland with various mixes of historic fill, demolition debris and municipal waste. The background research and site investigations conducted to date provide sufficient information to delineate the horizontal and vertical extent of fill.

Type of Fill. As noted above, the fill encountered on these properties consist of various mixes of construction fill, historic fill, demolition debris, and municipal waste. Fill north of Polito Avenue consists mainly of construction fill and historic fill. Fill south of Polito Avenue consists of mixes of construction soil, demolition debris, historic fill and municipal waste. No discrete or large masses of industrial wastes were encountered or are indicated by levels of contamination. Elevated presence of lead in soil and groundwater in the southeast sector of this area indicates potential presence of industrial waste, although no such waste was observed during this investigation.

Contaminants of Concern. The contaminants of concern vary with differences in fill matrices observed across this area. In particular, the type and level of contamination varies significantly between land areas north and south of Polito Avenue.

South of Politio Avenue, the presence of waste fill dominates fill quality. A limited number of volatile organic compounds were detected below restricted use criteria, with no defined pattern or source. Benzene was detected in one sample (V-4) above restricted use criteria in an area of historic fill previously remediated following fuel tank field closure. Polycyclic aromatic hydrocarbons were consistently detected at concentrations typical of historic fill mixed in with the solid waste and construction fill. The PCBs, Aroclor 1254 and 1260, were detected in three samples collected from an area of waste fill in Lot 16.01 below NJDEP restricted use criteria.

Heavy metal constituents were detected at concentrations typical of municipal waste and historic fill. Metals exceeding restricted use criteria included barium and lead in 6 of 7 samples, copper in 5 of 7, zinc in 4 arsenic in 3, antimony and nickel in 2 of 7 samples from the landfilled portion of the area. Lead was detected in two samples from waste fill in Lot 16.01 at concentrations significantly higher than concentrations in samples from similar fill areas of the project, indicating potential presence of metal bearing wastes.

NJDEP LUST records indicate 8 USTs were removed and remedial actions taken on Lot 16.02. The records indicate site closure has been stalled by a request to contain contaminated soil not related to the tank removals. Kimball investigations have confirmed the presence of lead contamination at issue with the LUST program.

North of Politio Avenue, absence of waste fill reduces the variety and concentration of contaminants observed in site fill. Analysis of samples from properties located north of Polito Avenue did not report presence of volatile, pesticide, PCB or herbicide constituents above detection limit. Several PAH compounds were reported above NJDEP restricted use criteria in 1 of four samples from the Lot 18, with concentrations falling with historic fill range. No inorganic analytes were reported above restricted criteria. The type and concentration of contaminants observed north of Polito Avenue indicates incidental impact from historic fill and absence of significant impact from former soap storage and manufacturing operations on the properties.

7.5.2 Groundwater Investigations

Physical Characteristics of Groundwater. Groundwater was observed to vary north and south of Polito Avenue. North of Polito Avenue, soil borings did not reach saturated conditions within 25 feet of ground surface. Results of water level measurements in two monitor wells installed in fill south of Polito Avenue indicate presence of groundwater in the fill slightly above the surrounding marsh and stream levels. Soil borings confirmed presence of the organic silt and clay beneath the fill areas south of Polito Avenue, as such groundwater flow is expected to represent rainwater entering the fill and migrating out to adjoining streams via seepage.

Groundwater Quality. As noted above, shallow groundwater was only observed south of Polito Avenue. A limited number of aromatic hydrocarbons, polycyclic aromatic hydrocarbons and phthalates were detected at concentrations below GWQS in the fill south of Polito Avenue. N-nitosodiphenylamine was detected in 1 of 2 samples above the GWQS. Chlorobenzene and acetone were each detected in 1 of 2 wells at concentrations below GWQS. No herbicides, pesticides or PCBs were detected in area groundwater. Aluminum, antimony, barium, cadmium, chromium, iron, lead and manganese were detected above GWQS in both groundwater samples. Copper, nickel and zinc were detected in 1 of 2 samples above GWQS. The results of investigations conducted to date confirm impacts to site groundwater from waste fill.

7.5.3 Surface Water and Seep Investigation

Water was observed to seep out of the fill along the top of sediment in the stream banks along Van Winkle Ditch and Viola Ditch. The shallow, flat groundwater table indicates flow would increase following storm events when the groundwater pool rises above the stream elevations. Except for benzene in one sample and a phthalate in one sample below SWQS, volatile organic compounds, semi-volatile organic compounds, pesticides, or PCBs were not detected in the seep samples collected from Van Winkle Ditch and Viola Ditch. The inorganic analytes arsenic, manganese and mercury were detected above SWQS in both seep samples. We do note that the laboratory reported detection levels consistently exceed surface water quality standards for organic compounds, therefore we cannot confirm if trace concentrations of contaminants exceed SWQS.

Comparison between quality of surface water and groundwater noted above, indicates the seepage represents groundwater flowing out of the landfill mass at low tide. The data also indicate that site groundwater quality represents worst-case quality of seepage. The continued seepage of groundwater represents an on-going non-point source for pollutant loading upon the Van Winkle Ditch and Viola Ditch.

7.5.4 Sediment Investigation

Volatile and pesticide organic compounds were not detected in the sediment samples collected along the northern extreme of Van Winkle Ditch and Viola Ditch. PCB Aroclors 1254 and 1260 were detected in one sample (V7) above marine estuarine sediment screening levels. However the duplicate sample from the same location was reported as non-detect, indicating possible positive or negative bias. A limited number of PAHs were detected in one sample (V-7) at concentrations below sediment screening criteria. The metals arsenic, cadmium, chromium, copper, lead, mercury, nickel, silver and zinc were detected in both sediment samples collected at concentrations exceeding ERL criteria in sediment along visible seeps. The concentrations noted in the assumed worst-case sediments are similar in concentration to sediments sampled at the edge of the study area (R24, R25, L25) and upstream in Berry's Creek (BK1) outside of the study area. The concentrations of these same metals were noticeably higher in sediment samples collected from Berry's Creek and the Hackensack River (BK1, BK2, BK3, R26, and L26) outside of the study area.

7.6 Ecological Assessment

Contaminants of Potential Ecological Concern – Several inorganic and organic constituents of site soil, sediment, and seeps have been detected above applicable ecological criteria and background concentrations. As such, arsenic, cadmium, copper, lead, mercury, nickel, zinc, PAHs and PCBs exhibit sufficient risk to be identified as Contaminants of Potential Ecological Concern.

Potential Receptor Areas – The Lyndhurst Landfill and Rutherford Landfill were constructed by filling salt-water marsh with solid waste, soil, and debris. Wetland assessments conducted in

2000 identified viable surface water ecosystems and saline wetland bordering Van Winkle Ditch, Viola Ditch, Berry's Creek, Berry's Creek Marsh, Fish Creek and the Hackensack River within the study area. As such, environmentally sensitive areas exist immediately adjacent to and downstream of the landfills.

Contaminant Migration Pathways – Dense vegetation, irregular land surfaces, and thin and disturbed surface cover minimize the potential for migration of contaminants by overland runoff or air dispersion. Precipitation falling within the landfills readily infiltrates into site groundwater, which in turn is free to migrate into adjoining surface water bodies that surround the landfills. The organic silt and varved clay provide effective barriers to contaminant migration beneath the landfills. Numerous seeps identified along the edge of waste act as a defined pathway for contaminated groundwater to migrate to adjoining surface water bodies.

General Conclusions – Contaminants of environmental concern exist with active contaminant migration pathways from the landfill source to adjoining potential receptor areas.

Soil/Fill/Debris containing compounds above criteria are distributed throughout Lyndhurst Landfill, Rutherford Landfill, Rutherford North and the Haul Road, and the Viola Area underlain by waste fill. No concentrated areas of contamination were reported that would suggest definable potential source areas separate of the waste fill.

The surface water bodies identified within the study area are inundated daily with water and suspended silts from Berry's Creek and the Hackensack River. As such, the impacts noted in site sediment and surface water include the long-term cumulative effect of contaminant migration from both on-site and off-site sources. As noted in other sections of this report, site surface water quality downstream of the landfill seeps is similar to water quality in the regional Berry's Creek and Hackensack River Basin upstream of the site. Therefore, reported impacts to sediment and surface waters are a function of both off-site and on-site sources.

ATTACHMENT 30

Table 2

Representative Hazardous Substances Within Industrial Waste Streams (Pre-Federal Waste Regulation)

Industry	Hazardous Substances										
	As	Cd	Chlorinated hydrocarbons (Includes PCBs)	Cr	Cu	Cyanides	Pb	Hg	Miscellanous organics	Se	Zn
Mining and metallurgy	✓	✓		✓	✓	✓	✓	✓		✓	✓
Paint and dye		✓		✓	✓	✓	✓	✓	✓	✓	
Pesticide	✓		✓			✓	✓	✓	✓		✓
Electrical and electronic			✓		✓	✓	✓	✓		✓	
Printing and Duplicating	✓			✓	✓		✓		✓	✓	
Electroplating and metal finishing		✓		✓	✓	✓					✓
Chemical manufacturing			✓	✓	✓			✓	✓		
Explosives	✓				✓		✓	✓	✓		
Rubber and plastics			✓			✓		✓	✓		✓
Battery		✓					✓	✓			✓
Pharmaceutical	✓							✓	✓		
Textile				✓	✓				✓		
Petroleum and coal	✓		✓				✓				
Pulp and paper								✓	✓		
Leather				✓					✓		

Note: Wilson, David Gordon, ed., Handbook of Solid Waste Management, Van Nostrand Reinhold Company, New York, 1977, p. 77.

ATTACHMENT 31

United States
Environmental Protection
Agency

Solid Waste and
Emergency Response
(OS-305)

EPA/530-SW-90-017A
February 1990

Office of Solid Waste

EPA

Environmental Fact Sheet

PLASTICS: THE FACTS ABOUT PRODUCTION, USE, AND DISPOSAL

FROM EPA'S *REPORT TO CONGRESS ON METHODS TO MANAGE AND CONTROL PLASTIC WASTE*

Discarded plastic products and packaging make up a growing proportion of municipal solid waste. By the year 2000, the amount of plastic we throw away will increase by 50 percent. Current volume estimates for plastic waste range from 14 to 21 percent of the waste stream. By weight plastics contribute seven percent, and less than one percent of plastic waste is currently recycled. Additionally, some plastic items end up as litter that poses ecological risk in the marine environment and aesthetic and economic loss. Knowledge of the amounts, types, and uses of plastics produced in the United States is necessary for the evaluation of solutions.

The Major Plastics and Their Uses

The term "plastics" encompasses a wide variety of resins or polymers with different characteristics and product uses. Nearly 60 billion pounds of plastic were produced in the U.S. in 1988.

Five resins account for nearly 60 percent of all plastics used by consumers. These are low-density polyethylene, used in garbage bags; polyvinyl chloride, used in cooking oil bottles; high-density polyethylene, used in milk jugs; polypropylene, used in car battery cases; and polystyrene, used in disposable food containers. The resin polyethylene terephthalate is produced in much smaller quantities, but is familiar to consumers as the plastic used in soft drink bottles. One-third of all plastics is used in packaging. Because packaging has a short lifetime, it makes up a large part of the plastic waste stream.

Recycled/Recyclable
Printed on paper that contains at least 50% recycled fiber

BCSA0315647

Where Do Plastic Wastes Go?

About 80 percent of all municipal solid waste is landfilled, while 10 percent is incinerated and 10 percent recycled. Because only a small percentage of plastics is recycled (less than one percent), virtually all plastics are landfilled or incinerated.

Plastics make up about seven percent (by weight) of the municipal solid waste stream and about 14 to 21 percent by volume.

Do Plastics Cause Disposal Problems?

The slow degradation of plastics is not a significant factor in landfill capacity. Research has shown that other constituents (e.g., paper, wood, food wastes) also degrade very slowly.

Plastics contain additives, however, such as colorants, stabilizers and plasticizers, that may include toxic constituents such as lead and cadmium. Plastics contribute 28 percent of all cadmium in municipal solid waste and approximately two percent of all lead. Data are too limited to determine whether these and other plastic additives contribute significantly to leachate produced in municipal solid waste landfills.

Plastics that contain heavy metal-based additives may also contribute to the metal content of incinerator ash. EPA is conducting a study of substitutes for lead- and cadmium-based additives.

Because of its resistance to degradation, littered plastics debris can have a particularly serious effect in the marine environment (see related fact sheet, *The Facts About Plastics in the Marine Environment).* Enhancing the degradation of plastics has also been offered as a solution. Data are too limited, however, to determine their exact role (see related fact sheet, *The Facts on Degradable Plastics).*

EPA believes source reduction and recycling will provide the most significant results in reducing the impact of plastics in the environment (see related fact sheets, *Plastics: The Facts on Source Reduction* and *The Facts on Recycling Plastics).*

Where Can I Find Additional Information?

Call EPA's RCRA/Superfund Hotline for a free copy of the Executive Summary of the *Report to Congress on Methods to Manage and Control Plastic Wastes* (EPA/530-SW-89-051A). The toll-free number is 1-800-424-9346, or TDD 1-800-553-7672 for the hearing impaired. In Washington D.C., the number is 382-3000 or TDD 475-9652. The Hotline is open from 8:30 a.m. to 7:30 p.m. EST, Monday through Friday. Ask the Hotline for information on ordering the full report.

Original Printing on Recycled Paper

ATTACHMENT 32

2-13-214

Form 87

DEPARTMENT OF CONSERVATION
AND ECONOMIC DEVELOPMENT
DIVISION OF WATER POLICY & SUPPLY

Permit No. 26-2962 (30)
Application No. _____
County _____

WELL RECORD

1. OWNER Insulating Fabricators Inc. ADDRESS 150 Union Ave., East Rutherford, NJ
   Owner's Well No. 1 SURFACE ELEVATION 30 Feet (Above mean sea level)
2. LOCATION Union Avenue, East Rutherford
3. DATE COMPLETED 8/31/64 DRILLER Burrows Well Drilling Co., Inc.
4. DIAMETER: top 8 inches Bottom 6 inches TOTAL DEPTH 300 Feet
5. CASING: Type steel Diameter 8 inches Length 62 Feet
6. SCREEN: Type _____ Size of Opening _____ Diameter _____ inches Length _____ Feet
   Range in Depth { Top _____ Feet / Bottom _____ Feet } Geologic Formation _____
   Tail piece: Diameter _____ inches Length _____ Feet
7. WELL FLOWS NATURALLY _____ Gallons per Minute at _____ Feet above surface
   Water rises to _____ Feet above surface
8. RECORD OF TEST: Date 8/19/64 Yield [redacted] 170 Gallons per minute
   Static water level before pumping 60 Feet below surface
   Pumping level [redacted] 147 feet below surface after 8 hours pumping
   Drawdown [redacted] 87 Feet Specific Capacity _____ Gals. per min. per ft. of drawdown
   How Pumped Turbine How measured Orifice 3 x 4
   Observed effect on nearby wells none
9. PERMANENT PUMPING EQUIPMENT:
   Type Submersible Mfrs. Name Sumo
   Capacity [redacted] G.P.M. How Driven electric H.P. 10 R.P.M. _____
   Depth of Pump in well 155 Feet Depth of Footpiece in well _____ Feet
   Depth of Air Line in well _____ Feet Type of Meter on Pump _____ Size _____ Inches
10. USED FOR Air-Conditioning AMOUNT { Average _____ Gallons Daily / Maximum _____ Gallons Daily }
11. QUALITY OF WATER _____ Sample: Yes _____ No. X
    Taste _____ Odor _____ Color _____ Temp. 56 °F
12. LOG Over Are samples available? No
    (Give details on back of sheet or on separate sheet. If electric log was made, please furnish copy)
13. SOURCE OF DATA Drillings
14. DATA OBTAINED BY Burrows Well Drilling Co., Inc. Date Sept. 17, 1964

(NOTE: Use other side of this sheet for additional information such as log of materials penetrated, analysis of the water, sketch map, sketch of special casing arrangements etc.)

BCSA0166540

26 13 214

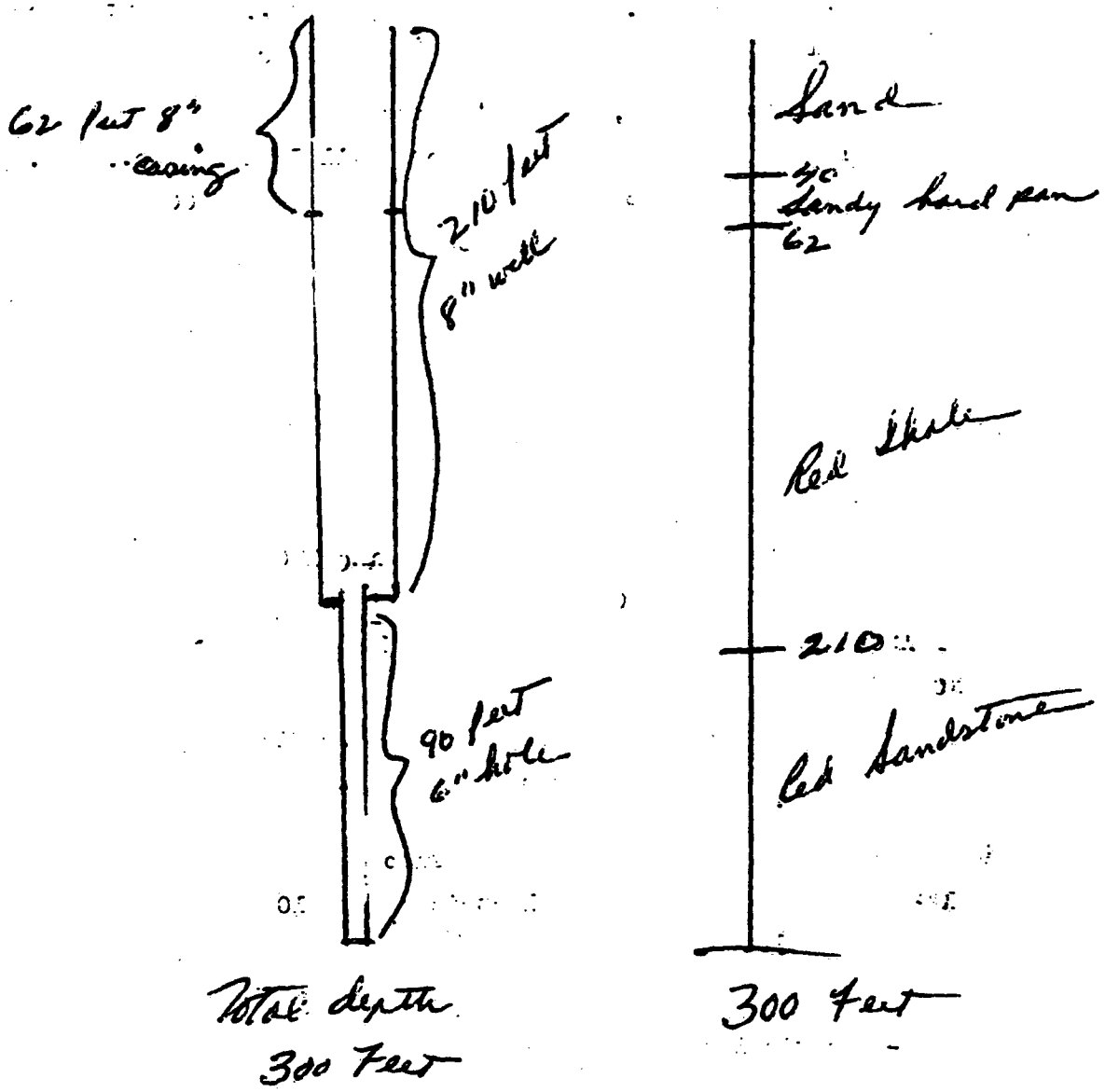

RECEIVED
GEOLOGY
TOPOGRAPHY

BCSA0166541

ATTACHMENT 33

United States
Environmental Protection
Agency

Research and Development

Risk Reduction
Engineering Laboratory
Cincinnati, OH 45268

EPA/600/S2-90/033 Sept. 1990

EPA

Project Summary

Machine Coolant Waste Reduction by Optimizing Coolant Life

Joseph Pallansch

Machine shops use coolants to improve the life and function of machine tools. With use, these coolants become contaminated with oils, and this contamination can lead to growth of anaerobic bacteria and shortened coolant life. This project investigated methods to extend coolant life through improved coolant maintenance; the goal was to reduce the volume of coolant waste.

Skimmers to remove oil from the surface of coolants were cost-effective. Practices for changing the coolant were documented and modified for improved coolant life. A specific coolant with wide applicability and tolerance was tested and found to have a life of at least 7 mo when using the documented procedures.

This Project Summary was developed by EPA's Risk Reduction Engineering Laboratory, Cincinnati, OH, to announce key findings of the research project that is fully documented in a separate report of the same title (see Project Report ordering information at back).

Introduction

Machine shops use coolants to transfer the heat generated during the machining process away from cutting tools and parts being produced. The coolant is collected in and recirculated from a sump. During use, the coolant collects oil from the machining process. This oil, called tramp oil, contributes to the growth of anaerobic bacteria that produce hydrogen sulfide gas, shorten coolant life, and eventually force disposal of the coolant as waste.

Coolant sumps contain from 20 to 100 gal each, and depending on maintenance practices, the coolant may require monthly or even weekly replacement. Even a small shop will have several machine tools, and large shops can have 100 and more. The exact management scheme for this waste coolant is determined by the type of coolant, level of contamination, presence of regulated materials (metals, organic solvents) and availability of treatment. Disposal costs vary from $20 to $200 per 55-gal drum depending on management required.

Washington Scientific Industries (WSI) is a machine shop that uses a wide variety of tools to make parts from materials such as steel, aluminum, copper, and stainless steel. The machines are medium-sized and similar to those used in many machine shops. The volume of waste coolant generated by WSI is affected by business activity, but averages 120 55-gal drums per yr with a management cost of $150 per drum.

This project was designed to study the following:

- a specific water-soluble coolant (Blasocut 2000 Universal*) used

* Mention of trade names or commercial products does not constitute endorsement or recommendation for use.

with a variety of machines, tools, and materials;
- coolant maintenance practices associated with three types of machines;
- observable health effects when using and handling recycled coolants;
- handling practices for chips and waste coolant;
- chip/coolant separation; and
- oil/water separation

The goal was to identify factors and techniques that contribute to the extension of coolant life and to document procedures and effects of the entire coolant life cycle. This information should be useful for decision making in other shops attempting to reduce the volume of waste coolant generated.

Procedures

The coolant selected by the company, Blasocut 2000, is a mineral oil based, water-soluble, metal-working fluid. Its use is intended for all chip-forming operations except grinding and all materials except magnesium. The concentration is made up of 60% refined mineral oils, to which emulsifiers and corrosion inhibitors are added. No biocides are present in the concentrate, and none are needed to maintain the solution. Company literature indicates that use of this coolant does not adversely affect worker health and that the coolant is recycled extensively in other applications.

Machines chosen for the project are 1 to 4 yr old and used for jobs with long (2 to 4 wk) production runs. Operators, material, and process were held constant during the project as much as possible. Standard industrial engineering practices were used to determine direct and indirect labor required for coolant change practices, coolant maintenance, waste handling, and waste containment.

Sampling was done to establish baselines for new coolant, way oil, coolant dilution water, air quality, and health effects. Ongoing sampling and analysis were also performed to monitor recycled coolant quality, air quality, and health effects. All sampling and analysis were performed by an independent consulting laboratory.

After several months of characterization, various coolant maintenance practices were evaluated: disk and belt skimmers for removing tramp oil, a centrifuge for removing tramp oil, and coolant change and sump cleaning practices. Sump modifications were required to mount equipment on the control group of machines, and additional equipment such as timers and coolant circulating pumps were also evaluated.

Chip handling practices from generation to storage before salvage were evaluated to address the problems of inefficient handling, poor salvage quality, and escape of coolant and oil draining from chips in storage. Time-and-motion studies were used to develop an efficient system for moving chips from the machine tools where they are generated to a waste management building specifically designed to capture and store draining coolant and oil and to protect chips while in storage.

Results and Discussion

Coolant Changing Procedure

The following changing procedure was established as the most efficient for extending coolant life.

1) skim all tramp oil from coolant surface
2) pump coolant from sump
3) vacuum chips from sump
4) remove sump access covers
5) vacuum chips from sump
6) steam clean and vacuum sump (repeat until clean)
7) replace sump access covers
8) replace coolant

This new practice takes about 5 hr and 12 min to do on a cast sump. Sumps made of sheet metal take several hours less because corners are more easily cleaned. This new coolant changing procedure, when combined with improved ongoing coolant maintenance, holds promise for extending coolant life.

Coolant Maintenance

Both belt and disc-type skimmers effectively reduced coolant oil and grease concentrations. This increases aerobic activity in the coolant and contributes to longer coolant life. When a centrifuge was evaluated for cleaning the coolant in the sumps of 25 machines not in the study group, it was not cost-effective, at least as a mobile unit.

Coolant

Blasocut 2000, even after being recycled for 7 mo, met or exceeded metal removal rates for aluminum, steel, copper, and stainless steel. The use of recycled coolant also did not appear to be associated with any increase in dermatitis on operators' hands. Laboratory research showed that when the recycled coolant must be disposed of, oil and water can be separated by acidifying the coolant and allowing the oil fraction to separate. Elevated levels of 2.5 to 3.5 mg/L copper and 8 to 10 mg/L zinc were found in the water fraction of the coolant left after this separation.

Conclusions and Recommendations

The life of machine tool coolant can be significantly extended, and the volume of waste coolant generated can be reduced. Using a coolant and way oil with wide applicability and suitability for recycling is important. Key factors seem to be tolerance of hard water, resistance to anaerobic bacteria growth, and stability over a range of concentrations.

Simple skimming of tramp oil using any of several different methods was cost effective and reduced oil and grease concentrations significantly. This extended coolant life to at least 7 mo; previously, used coolant may have been changed after 1 wk.

Although using this single coolant meets 90% of WSI s requirements, many machine shops will balk at switching to a different coolant. Therefore, further research is needed on the coolant maintenance and changing procedures documented in this project and on their effect on the life of a variety of coolants. Research is also needed on alternative cooling methods and schemes for preventing contamination of coolant by way and hydraulic oil.

This study was conducted through the Minnesota Technical Assistance Program and the Minnesota Waste Management Board. The full report was submitted in partial fulfillment of Cooperative Agreement No. CR 813437-01 under the sponsorship of the U.S. Environmental Protection Agency.

☆U. S. GOVERNMENT PRINTING OFFICE: 1990/748-012/2009

BCSA0316193

BCSA0316194

Joseph Pallansch is with Washington Scientific Industries Inc., Long Lake, MN 55356
James S. Bridges is the EPA Project Officer (see below).
The complete report, entitled "Machine Coolant Waste Reduction by Optimizing Coolant Life," (Order No. PB 90-257 783/AS; Cost: $17.00, subject to change) will be available only from:
National Technical Information Service
5285 Port Royal Road
Springfield, VA 22161
Telephone: 703-487-4650
The EPA Project Officer can be contacted at:
Risk Reduction Engineering Laboratory
U.S. Environmental Protection Agency
Cincinnati, OH 45268

United States
Environmental Protection
Agency

Center for Environmental Research
Information
Cincinnati OH 45268

BULK RATE
POSTAGE & FEES PAID
EPA
PERMIT No. G-35

Official Business
Penalty for Private Use $300

EPA/600/S2-90/033

BCSA0316195