NOTE:
SEE UPDATED
APPLICATION DATED
4-6-84

REVERE
COPPER AND BRASS INCORPORATED

June 16, 1981

P.O. Box 250
Clinton, Ill. 61727
217-935-3111
TWX: 510-527-7750

EPA Region 5 Records Ctr.
315330

RECEIVED
JUN 18 1981
ENVIRONMENTAL PROTECTION AGENCY
DIVISION OF WATER POLLUTION CONTROL
PERMIT SECTION - SPRINGFIELD
STATE OF ILLINOIS

Ms. Carol Houston
Permit Section-DWPC
Illinois EPA
2200 Churchill Road
Springfield, IL 62706

Ref; NPDES Permit No. IL0002356

Dear Ms. Houston,

Forwarded herewith is the consolidated permit application for renewal of our NPDES Permit No. IL0002356 covering outlets 001 and 002.

Please call if I may be of further service.

Very truly yours,

Anthony B. Taubert
Chief Chemist

cc-B. T. Cunningham
S. H. Kaprelian-XO
M. A. Pingaman-GO
File

Please print or type in the unshaded areas only
(fill–in areas are spaced for elite type, i.e., 12 characters/inch).

Form Approved OMB No. 158-R0175

FORM 1 GENERAL

EPA

U.S. ENVIRONMENTAL PROTECTION AGENCY

GENERAL INFORMATION

Consolidated Permits Program

(Read the "General Instructions" before starting.)

I. EPA I.D. NUMBER

F ILD005078274

LABEL ITEMS

I. EPA I.D. NUMBER

III. FACILITY NAME

V. FACILITY MAILING ADDRESS

VI. FACILITY LOCATION

PLEASE PLACE LABEL IN THIS SPACE

GENERAL INSTRUCTIONS

If a preprinted label has been provided, affix it in the designated space. Review the information carefully; if any of it is incorrect, cross through it and enter the correct data in the appropriate fill–in area below. Also, if any of the preprinted data is absent *(the area to the left of the label space lists the information that should appear)*, please provide it in the proper fill–in area*(s)* below. If the label is complete and correct, you need not complete Items I, III, V, and VI *(except VI-B which must be completed regardless)*. Complete all items if no label has been provided. Refer to the instructions for detailed item descriptions and for the legal authorizations under which this data is collected.

II. POLLUTANT CHARACTERISTICS

INSTRUCTIONS: Complete A through J to determine whether you need to submit any permit application forms to the EPA. If you answer "yes" to any questions, you must submit this form and the supplemental form listed in the parenthesis following the question. Mark "X" in the box in the third column if the supplemental form is attached. If you answer "no" to each question, you need not submit any of these forms. You may answer "no" if your activity is excluded from permit requirements; see Section C of the instructions. See also, Section D of the instructions for definitions of **bold–faced terms.**

SPECIFIC QUESTIONS	MARK 'X' YES	NO	FORM ATTACHED
A. Is this facility a **publicly owned treatment works** which results in a **discharge** to **waters of the U.S.**? (FORM 2A)		X	
C. Is this a facility which currently results in **discharges** to **waters of the U.S.** *other than those described in* A or B above? (FORM 2C)	X		X
E. Does or will this facility treat, store, or dispose of **hazardous wastes**? (FORM 3)	X		
G. Do you or will you inject at this facility any produced water or other fluids which are brought to the surface in connection with conventional oil or natural gas production, inject fluids used for enhanced recovery of oil or natural gas, or inject fluids for storage of liquid hydrocarbons? (FORM 4)		X	
I. *Is this facility a proposed* **stationary source** which is one of the 28 industrial categories listed in the instructions and which will potentially emit 100 tons per year of any air pollutant regulated under the Clean Air Act and may affect or be located in an **attainment area**? (FORM 5)		X	

SPECIFIC QUESTIONS	MARK 'X' YES	NO	FORM ATTACHED
B. Does or will this facility *(either existing or proposed) include a* **concentrated animal feeding operation** or **aquatic animal production facility** which results in a **discharge** to **waters of the U.S.**? (FORM 2B)		X	
D. Is this a proposed facility *(other than those described in A or B above) which will result in a* **discharge** to **waters of the U.S.**? (FORM 2D)		X	
F. Do you or will you inject at this facility industrial or municipal effluent below the lowermost stratum containing, within *one quarter mile of the well bore,* underground sources of drinking water? (FORM 4)		X	
H. Do you or will you inject at this facility fluids for special processes such as mining of sulfur by the Frasch process, solution mining of minerals, in situ combustion of fossil fuel, or recovery of geothermal energy? (FORM 4)		X	
J. Is this facility a proposed **stationary source** which is NOT one of the 28 industrial categories listed in the instructions and which will potentially emit 250 tons per year of any air pollutant regulated under the Clean Air Act and may affect or be located in an **attainment area**? (FORM 5)		X	

III. NAME OF FACILITY

1 SKIP REVERE COPPER AND BRASS INCORPORATED

IV. FACILITY CONTACT

A. NAME & TITLE *(last, first, & title)*	B. PHONE *(area code & no.)*
2 TAUBERT ANTHONY CHIEF CHEMIST	217 935 3111

V. FACILITY MAILING ADDRESS

A. STREET OR P.O. BOX

3 PO BOX 250

B. CITY OR TOWN	C. STATE	D. ZIP CODE
4 CLINTON	IL	61727

RECEIVED

JUN 18 1981

ENVIRONMENTAL PROTECTION AGENCY

STATE OF ILLINOIS

VI. FACILITY LOCATION

A. STREET, ROUTE NO. OR OTHER SPECIFIC IDENTIFIER

5 SOUTH SHERMAN STREET

B. COUNTY NAME

DEWITT

C. CITY OR TOWN	D. STATE	E. ZIP CODE	F. COUNTY CODE *(if known)*
6 CLINTON	IL	61727	

CONTINUE ON REVERS

CONTINUED FROM THE FRONT

VII. SIC CODES *(4-digit, in order of priority)*

A. FIRST	B. SECOND
7 3351 (specify) Drawing Copper Tubing	7 3471 (specify) Chrome and Copper Plating
C. THIRD	**D. FOURTH**
7 3469 (specify) Metal Stampings	7 (specify)

VIII. OPERATOR INFORMATION

A. NAME: 8 REVERE COPPER AND BRASS INCORPORATED

B. Is the name listed in Item VIII-A also the owner? [X] YES [ ] NO

C. STATUS OF OPERATOR *(Enter the appropriate letter into the answer box; if "Other", specify.)*
F = FEDERAL, S = STATE, P = PRIVATE, M = PUBLIC *(other than federal or state)*, O = OTHER *(specify)*: P (specify)

D. PHONE *(area code & no.)*: A 217 935 3111

E. STREET OR P.O. BOX: PO BOX 250

F. CITY OR TOWN: B CLINTON **G. STATE**: IL **H. ZIP CODE**: 61727

IX. INDIAN LAND Is the facility located on Indian lands? [ ] YES [X] NO

X. EXISTING ENVIRONMENTAL PERMITS

A. NPDES *(Discharges to Surface Water)*	9 N	ILO002356	
D. PSD *(Air Emissions from Proposed Sources)*	9 P		
B. UIC *(Underground Injection of Fluids)*	9 U		
E. OTHER *(specify)*	9	73030722	(specify) Illinois EPA Air Operating Permit
C. RCRA *(Hazardous Wastes)*	9 R		
E. OTHER *(specify)*	9	72090295	(specify) Illinois EPA Air Operating Permit

XI. MAP

Attach to this application a topographic map of the area extending to at least one mile beyond property bounderies. The map must show the outline of the facility, the location of each of its existing and proposed intake and discharge structures, each of its hazardous waste treatment, storage, or disposal facilities, and each well where it injects fluids underground. Include all springs, rivers and other surface water bodies in the map area. See instructions for precise requirements.

XII. NATURE OF BUSINESS *(provide a brief description)*

Manufacture of copper-clad stainless steel kitchen utensils.

Fabrication of stampings from various metals for the trade.

Piercing and drawing of seamless copper tubing.

XIII. CERTIFICATION *(see instructions)*

I certify under penalty of law that I have personally examined and am familiar with the information submitted in this application and all attachments and that, based on my inquiry of those persons immediately responsible for obtaining the information contained in the application, I believe that the information is true, accurate and complete. I am aware that there are significant penalties for submitting false information, including the possibility of fine and imprisonment.

A. NAME & OFFICIAL TITLE *(type or print)*	B. SIGNATURE	C. DATE SIGNED
John M. Eikenberg Vice-President	John M. Eikenberg	June 16, 1981

COMMENTS FOR OFFICIAL USE ONLY

C

Please print or type in the unshaded areas only.

EPA I.D. NUMBER (copy from Item 1 of Form 1)
ILD005078274

Form Approved OMB No. 158-R0173

FORM 2C NPDES

EPA

U.S. ENVIRONMENTAL PROTECTION AGENCY
APPLICATION FOR PERMIT TO DISCHARGE WASTEWATER
EXISTING MANUFACTURING, COMMERCIAL, MINING AND SILVICULTURAL OPERATIONS
Consolidated Permits Program

I. OUTFALL LOCATION

For each outfall, list the latitude and longitude of its location to the nearest 15 seconds and the name of the receiving water.

A. OUTFALL NUMBER (list)	B. LATITUDE			C. LONGITUDE			D. RECEIVING WATER (name)
	1. DEG.	2. MIN.	3. SEC.	1. DEG.	2. MIN.	3. SEC.	
001	40	08	45	88	57	30	Unnamed tributary of Coon Creek
002	40	08	45	88	57	30	Unnamed tributary of Coon Creek

II. FLOWS, SOURCES OF POLLUTION, AND TREATMENT TECHNOLOGIES

A. Attach a line drawing showing the water flow through the facility. Indicate sources of intake water, operations contributing wastewater to the effluent, and treatment units labeled to correspond to the more detailed descriptions in Item B. Construct a water balance on the line drawing by showing average flows between intakes, operations, treatment units, and outfalls. If a water balance cannot be determined *(e.g., for certain mining activities)*, provide a pictorial description of the nature and amount of any sources of water and any collection or treatment measures.

B. For each outfall, provide a description of: (1) All operations contributing wastewater to the effluent, including process wastewater, sanitary wastewater, cooling water, and storm water runoff; (2) The average flow contributed by each operation; and (3) The treatment received by the wastewater. Continue on additional sheets if necessary.

1. OUTFALL NO. (list)	2. OPERATION(S) CONTRIBUTING FLOW		3. TREATMENT	
	a. OPERATION (list)	b. AVERAGE FLOW (include units)	a. DESCRIPTION	b. LIST CODES FROM TABLE 2C-1
001	Pickling Solutions	1600 GPD	2K - 2C - 1G - 1U - 5D	
	Continuous Cast Furnace	182,100 GPD	None	
	Chrome Plating rinses	7000 GPD	2L - 2K - 2C - 1G - 1U - 5D	
	Finish Department rinse	30,000 GPD	2L - 2K - 2C - 1G - 1U - 5D	
001	Copper Plating rinses	33,000 GPD	2K - 2C - 1G - 1U - 5D	
	Pickle rinse	6000 GPD	2K - 2C - 1G - 1U - 5D	
	Storm water, upstream		None	
	Recirculating H_2O system	9000 GPD	1U - 1H - 1G - 5D	
001	Annealing furnaces	Unknown	None	
	Billet furnace	Unknown	None	
	Filter backwash	Unknown	None	
002	Storm, field drainage	10,900 GPD	None	

RECEIVED
JUN 13
ENVIRONMENTAL PROTECTION AGENCY
DIVISION OF WATER POLLUTION CONTROL
PERMIT SECTION - SPRINGFIELD
STATE OF ILLINOIS

OFFICIAL USE ONLY *(effluent guidelines sub-categories)*

CONTINUED FROM THE FRONT

C. Except for storm runoff, leaks, or spills, are any of the discharges described in Items II-A or B intermittent or seasonal?

☐ YES *(complete the following table)* ☒ NO *(go to Section III)*

1. OUTFALL NUMBER *(list)*	2. OPERATION(s) CONTRIBUTING FLOW *(list)*	3. FREQUENCY a. DAYS PER WEEK *(specify average)*	3. FREQUENCY b. MONTHS PER YEAR *(specify average)*	4. FLOW a. FLOW RATE *(in mgd)* 1. LONG TERM AVERAGE	4. FLOW a. FLOW RATE *(in mgd)* 2. MAXIMUM DAILY	4. FLOW b. TOTAL VOLUME *(specify with units)* 1. LONG TERM AVERAGE	4. FLOW b. TOTAL VOLUME *(specify with units)* 2. MAXIMUM DAILY	4. FLOW c. DURATION *(in days)*

III. MAXIMUM PRODUCTION

A. Does an effluent guideline limitation promulgated by EPA under Section 304 of the Clean Water Act apply to your facility?

☐ YES *(complete Item III-B)* ☒ NO *(to to Section IV)*

B. Are the limitations in the applicable effluent guideline expressed in terms of production *(or other measure of operation)*?

☐ YES *(complete Item III-C)* N/A ☐ NO *(go to Section IV)*

C. If you answered "Yes" to Item III-B, list the quantity which represents an actual measurement of your maximum level of production, expressed in the terms and units used in the applicable effluent guideline, and indicate the affected outfalls.

1. MAXIMUM QUANTITY a. QUANTITY PER DAY	1. MAXIMUM QUANTITY b. UNITS OF MEASURE	1. MAXIMUM QUANTITY c. OPERATION, PRODUCT, MATERIAL, ETC. *(specify)*	2. AFFECTED OUTFALLS *(list outfall numbers)*
NA			

IV. IMPROVEMENTS

A. Are you now required by any Federal, State or local authority to meet any implementation schedule for the construction, upgrading or operation of wastewater treatment equipment or practices or any other environmental programs which may affect the discharges described in this application? This includes, but is not limited to, permit conditions, administrative or enforcement orders, enforcement compliance schedule letters, stipulations, court orders, and grant or loan conditions.

☒ YES *(complete the following table)* ☐ NO *(go to Item IV-B)*

1. IDENTIFICATION OF CONDITION, AGREEMENT, ETC.	2. AFFECTED OUTFALLS a. NO.	2. AFFECTED OUTFALLS b. SOURCE OF DISCHARGE	3. BRIEF DESCRIPTION OF PROJECT	4. FINAL COMPLIANCE DATE a. REQUIRED	4. FINAL COMPLIANCE DATE b. PROJECTED
State of Illinois PCB-76-248	001	Wastewater Treatment Plant	Investigate and report on technical and economic feasibility of using new treatment technologies.	N.A.	

B. OPTIONAL: You may attach additional sheets describing any additional water pollution control programs *(or other environmental projects which may affect your discharges)* you now have underway or which you plan. Indicate whether each program is now underway or planned, and indicate your actual or planned schedules for construction. ☐ MARK "X" IF DESCRIPTION OF ADDITIONAL CONTROL PROGRAMS IS ATTACHED

 CONTINUE ON PAGE 3

EPA I.D. NUMBER (copy from Item 1 of Form 1)
ILD005078274

Form Approved OMB No. 158-R0173

V. INTAKE AND EFFLUENT CHARACTERISTICS

A, B, & C: See instructions before proceeding — Complete one set of tables for each outfall — Annotate the outfall number in the space provided. NOTE: Tables V-A, V-B, and V-C are included on separate sheets numbered V-1 through V-9.

D. Use the space below to list any of the pollutants listed in Table 2c-3 of the instructions, which you know or have reason to believe is discharged or may be discharged from any outfall. For every pollutant you list, briefly describe the reasons you believe it to be present and report any analytical data in your possession.

1. POLLUTANT	2. SOURCE	1. POLLUTANT	2. SOURCE
None			

VI. POTENTIAL DISCHARGES NOT COVERED BY ANALYSIS

A. Is any pollutant listed in Item V-C a substance or a component of a substance which you do or expect that you will over the next 5 years use or manufacture as an intermediate or final product or byproduct?

n.a.] YES (list all such pollutants below) ☐ NO (go to Item VI-B)

B. Are your operations such that your raw materials, processes, or products can reasonably be expected to vary so that your discharges of pollutants may during the next 5 years exceed two times the maximum values reported in Item V?

☐ YES (complete Item VI-C below) ☒ NO (go to Section VII)

C. If you answered "Yes" to Item VI-B, explain below and describe in detail the sources and expected levels of such pollutants which you anticipate will be discharged from each outfall over the next 5 years, to the best of your ability at this time. Continue on additional sheets if you need more space.

CONTINUED FROM THE FRONT

VII. BIOLOGICAL TOXICITY TESTING DATA

Do you have any knowledge or reason to believe that any biological test for acute or chronic toxicity has been made on any of your discharges or on a receiving water in relation to your discharge within the last 3 years?

☐ YES *(identify the test(s) and describe their purposes below)* ☒ NO *(go to Section VIII)*

VIII. CONTRACT ANALYSIS INFORMATION

Were any of the analyses reported in Item V performed by a contract laboratory or consulting firm?

☒ YES *(list the name, address, and telephone number of, and pollutants analyzed by, each such laboratory or firm below)* ☐ NO *(go to Section IX)*

A. NAME	B. ADDRESS	C. TELEPHONE *(area code & no.)*	D. POLLUTANTS ANALYZED *(list)*
Monsanto Research Corporation	PO Box 8, Station B, Dayton, Ohio 45407	(513)268-3411	TOC Phenols Priority Metals GC/MS fractions

IX. CERTIFICATION

I certify under penalty of law that I have personally examined and am familiar with the information submitted in this application and all attachments and that, based on my inquiry of those individuals immediately responsible for obtaining the information, I believe that the information is true, accurate and complete. I am aware that there are significant penalties for submitting false information, including the possibility of fine and imprisonment.

A. NAME & OFFICIAL TITLE *(type or print)*	B. PHONE NO. *(area code & no.)*
John M. Eikenberg Vice-President	(217)935-3111
C. SIGNATURE John M. Eikenberg	D. DATE SIGNED June 16, 1981

REVERE COPPER AND BRASS INC.
NEW YORK, N.Y.
ENG. DEPT.
CLINTON DIV.
CLINTON, ILL.

CLINTON DIVISION WATER SYSTEM

CONTENTS
SCHEMATIC FLOW DIAGRAM

EV
S 201-G

DATE REVISED, JUNE 16, 1981; To "
BY BLB

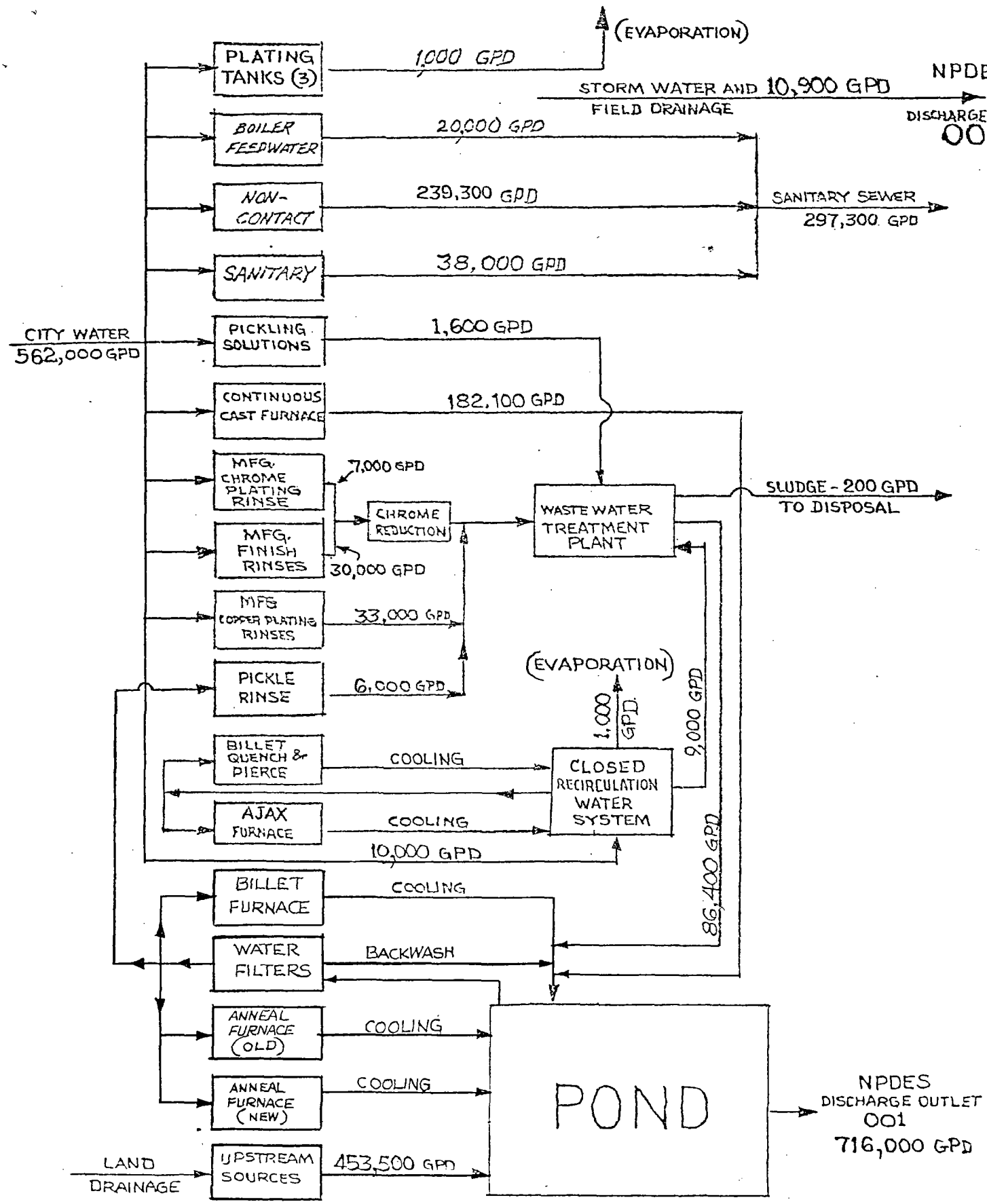

REVERE COPPER AND BRASS
INCORPORATED
NEW YORK, N. Y.
ENG. DEPT.

WASTE WATER TREATMENT SYSTEM

CONTENTS
LOCATION SKETCH - EFFLUENT

DISCHARGE POINTS 001 & 002

DATE
BY

EV-
S 01-3

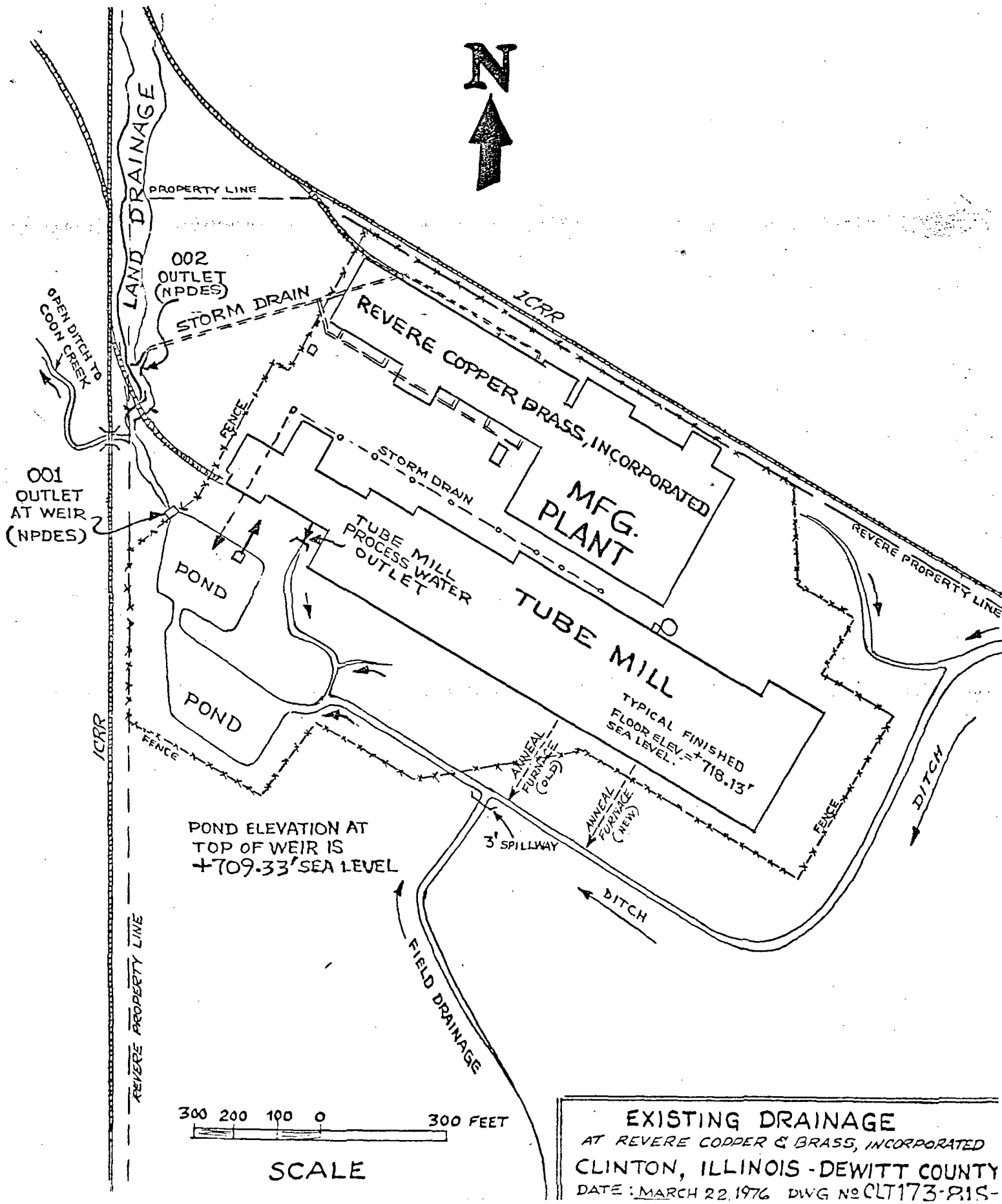

EXISTING DRAINAGE
AT REVERE COPPER & BRASS, INCORPORATED
CLINTON, ILLINOIS - DEWITT COUNTY
DATE: MARCH 22, 1976 DWG No CLT173-81S-

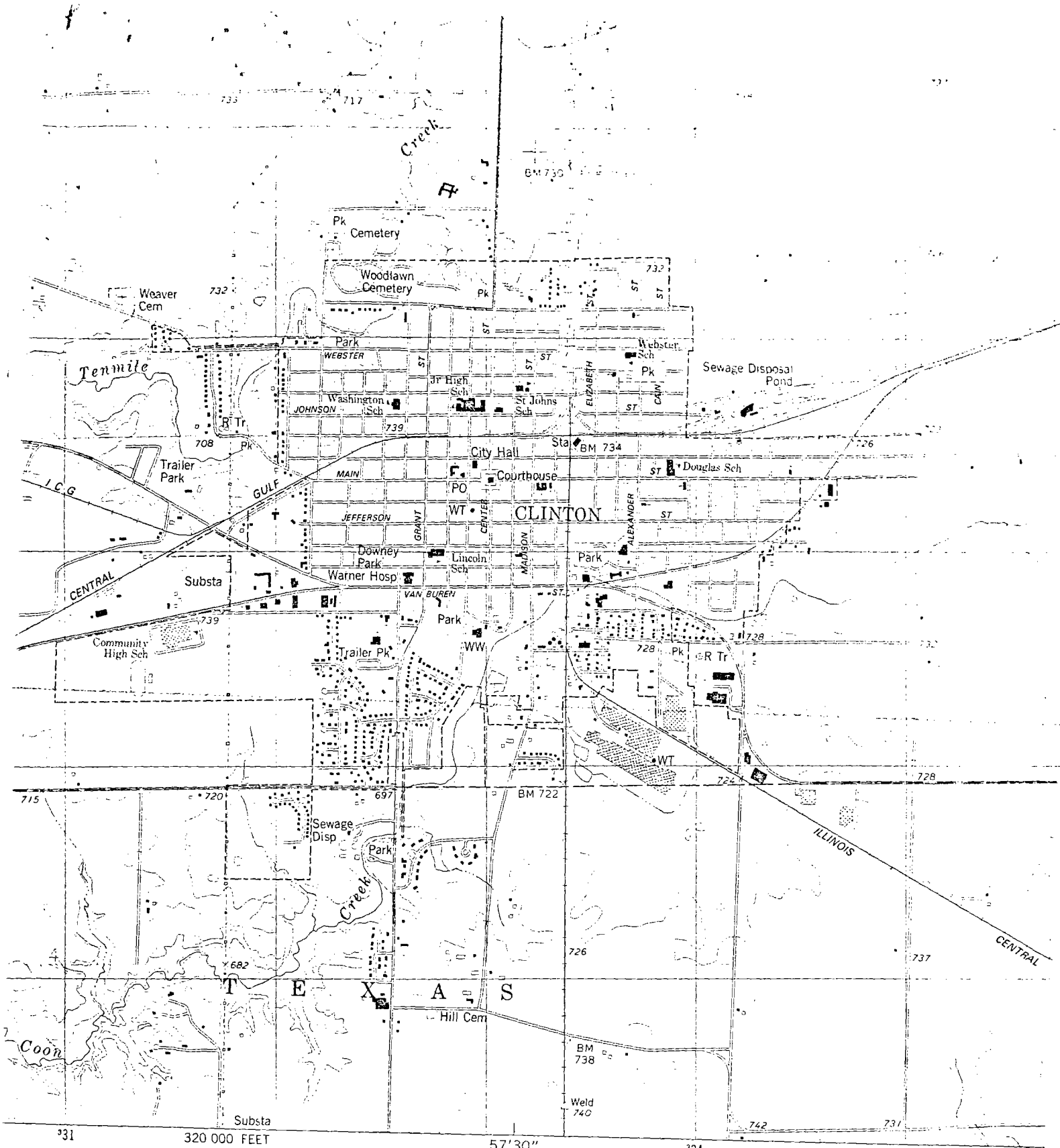

d by the Geological Survey

ods from aerial photographs
d 1978. Map edited 1979

: Illinois coordinate
r)
cator grid, zone 16

rican Datum 1983
st as shown by

n the boundaries of

MN
GN
1°15'
22 MILS
2°
36 MILS

UTM GRID AND 1979 MAGNETIC NORTH
DECLINATION AT CENTER OF SHEET

SCALE 1:24 000

1 ½ 0
1000 0 1000 2000 3000 4000 5000
1 .5 0

CONTOUR INTERVAL 5 FEET
NATIONAL GEODETIC VERTICAL DATUM OF 192

THIS MAP COMPLIES WITH NATIONAL MAP ACCURACY S
FOR SALE BY U. S. GEOLOGICAL SURVEY, RESTON, VIRGI
AND BY THE STATE GEOLOGICAL SURVEY, URBANA, ILLI

PLEASE PRINT OR TYPE IN THE UNSHADED AREAS ONLY. You may report some or all of this information on separate sheets *(use the same format)* instead of completing these pages. SEE INSTRUCTIONS.

EPA I.D. NUMBER *(copy from Item 1 of Form 1)*: ILD005078274

Form Approved OMB No. 158-R0173

V. INTAKE AND EFFLUENT CHARACTERISTICS *(continued from page 3 of Form 2-C)*

OUTFALL NO. 001

PART A - You must provide the results of at least one analysis for every pollutant in this table. Complete one table for each outfall. See instructions for additional details.

1. POLLUTANT	2. EFFLUENT a. MAXIMUM DAILY VALUE (1) CONCENTRATION	a. MAXIMUM DAILY VALUE (2) MASS	b. MAXIMUM 30 DAY VALUE (if available) (1) CONCENTRATION	b. MAXIMUM 30 DAY VALUE (2) MASS	c. LONG TERM AVRG. VALUE (if available) (1) CONCENTRATION	c. LONG TERM AVRG. VALUE (2) MASS	d. NO. OF ANALYSES	3. UNITS (specify if blank) a. CONCENTRATION	3. UNITS b. MASS	4. INTAKE (optional) a. LONG TERM AVERAGE VALUE (1) CONCENTRATION	4. INTAKE a. LONG TERM AVERAGE VALUE (2) MASS	4. INTAKE b. NO. OF ANALYSES
a. Biochemical Oxygen Demand *(BOD)* *	15.0	53.52			3.78	22.56	27	mg/L	lbs			
b. Chemical Oxygen Demand *(COD)* *	27.0	80.70			17.75	105.95	4	mg/L	lbs			
c. Total Organic Carbon *(TOC)*	7.0	36.36					1	mg/L	lbs			
d. Total Suspended Solids *(TSS)*	61.5	415.1	18.88	159.6	6.09	36.35	105	mg/L	lbs			
e. Ammonia *(as N)* *	2.3	10.9			0.374	2.23	25	mg/L	lbs			
f. Flow	VALUE 55,349,343		VALUE 10,571,316		VALUE 5,969,292		238		lbs	VALUE		
g. Temperature *(winter)*	VALUE 20		VALUE 14.4		VALUE 7.7		126	°C		VALUE		
h. Temperature *(summer)*	VALUE 28.3		VALUE 26.5		VALUE 20.3		118	°C		VALUE		
i. pH	MINIMUM 6.9	MAXIMUM 9.0	MINIMUM 7.85	MAXIMUM 8.37			216	STANDARD UNITS				

PART B - Mark "X" in column 2-a for each pollutant you know or have reason to believe is present. Mark "X" in column 2-b for each pollutant you believe to be absent. If you mark column 2-a for any pollutant, you must provide the results of at least one analysis for that pollutant. Complete one table for each outfall. See the instructions for additional details and requirements.

1. POLLUTANT AND CAS NO. *(if available)*	2. MARK 'X' a. BELIEVED PRESENT	2. MARK 'X' b. BELIEVED ABSENT	3. EFFLUENT a. MAXIMUM DAILY VALUE (1) CONCENTRATION	a. MAXIMUM DAILY VALUE (2) MASS	b. MAXIMUM 30 DAY VALUE (if available) (1) CONCENTRATION	b. MAXIMUM 30 DAY VALUE (2) MASS	c. LONG TERM AVRG. VALUE (if available) (1) CONCENTRATION	c. LONG TERM AVRG. VALUE (2) MASS	d. NO. OF ANALYSES	4. UNITS a. CONCENTRATION	4. UNITS b. MASS	5. INTAKE (optional) a. LONG TERM AVERAGE VALUE (1) CONCENTRATION	5. INTAKE a. LONG TERM AVERAGE VALUE (2) MASS	5. INTAKE b. NO. OF ANALYSES
a. Bromide (24959-67-9)		X												
b. Chlorine, Total Residual		X												
c. Color		X												
d. Fecal Coliform		X												
e. Fluoride (16984-48-8)		X												
f. Nitrate-Nitrite *(as N)*		X												

* These results include analyses performed by IEPA between 4/4/74 and 9/20/78.

ITEM V-B CONTINUED FROM FRONT

1. POLLUTANT AND CAS NO. (if available)	2. MARK 'X' a. BELIEVED PRESENT	2. MARK 'X' b. BELIEVED ABSENT	3. EFFLUENT a. MAXIMUM DAILY VALUE (1) CONCENTRATION	a. MAXIMUM DAILY VALUE (2) MASS	b. MAXIMUM 30 DAY VALUE (if available) (1) CONCENTRATION	b. MAXIMUM 30 DAY VALUE (2) MASS	c. LONG TERM AVRG. VALUE (if available) (1) CONCENTRATION	c. LONG TERM AVRG. VALUE (2) MASS	d. NO. OF ANALYSES	4. UNITS a. CONCENTRATION	4. UNITS b. MASS	5. INTAKE (optional) a. LONG TERM AVERAGE VALUE (1) CONCENTRATION	5. INTAKE (optional) a. LONG TERM AVERAGE VALUE (2) MASS	5. INTAKE (optional) b. NO. OF ANALYSES
g. Nitrogen, Total Organic (as N)		X												
h. Oil and Grease	X		15.0	178.8	7.61	35.4	4.91	29.31	98	mg/L	lbs			
i. Phosphorus (as P), Total (7723-14-0)		X												
j. Radioactivity														
(1) Alpha, Total		X												
(2) Beta, Total		X												
(3) Radium, Total		X												
(4) Radium 226, Total		X												
k. Sulfate (as SO_4) * (14808-79-8)	X		54.0	Unk					2	mg/L				
l. Sulfide (as S)		X												
m. Sulfite (as SO_3) (14265-45-3)		X												
n. Surfactants		X												
o. Aluminum, Total (7429-90-5)		X												
p. Barium, Total (7440-39-3)	X		0.28	1.45					1	mg/L	lbs			
q. Boron, Total (7440-42-8)	X		0.49	2.55					1	mg/L	lbs			
r. Cobalt, Total (7440-48-4)		X												
s. Iron, Total (7439-89-6)	X		1.06	28.8	0.45	2.71	0.295	1.55	42	mg/L	lbs			
t. Magnesium, Total (7439-95-4)	X		32.6	169.32					1	mg/L	lbs	X		
u. Molybdenum, Total (7439-98-7)		X												
v. Manganese, Total (7439-96-5)	X		0.24	1.25					1	mg/L	lbs			
w. Tin, Total (7440-31-5)		X												
x. Titanium, Total (7440-32-6)		X												

CONTINUE ON PAGE V-3

* These results include analyses performed by IEPA between 4/4/74 and 9/20/78.

EPA I.D. NUMBER (copy from Item 1 of Form 1)	OUTFALL NUMBER
ILD005078274	001

CONTINUED FROM PAGE 3 OF FORM 2-C

Form Approved OMB No. 158-R0173

PART C - If you are a primary industry and this outfall contains process wastewater, refer to Table 2c-2 in the instructions to determine which of the GC/MS fractions you must test for. Mark "X" in column 2-a for all such GC/MS fractions that apply to your industry and for ALL toxic metals, cyanides, and total phenols. If you are not required to mark column 2-a *(secondary industries, non-process wastewater outfalls, and non-required GC/MS fractions)*, mark "X" in column 2-b for each pollutant you know or have reason to believe is present. Mark "X" in column 2-c for each pollutant you believe to be absent. If you mark either columns 2-a or 2-b for any pollutant, you must provide the results of at least one analysis for that pollutant. Note that there are seven pages to this part; please review each carefully. Complete one table *(all seven pages)* for each outfall. See instructions for additional details and requirements.

1. POLLUTANT AND CAS NUMBER (if available)	2. MARK 'X'			3. EFFLUENT							4. UNITS		5. INTAKE (optional)		
	a. TESTING REQUIRED	b. BELIEVED PRESENT	c. BELIEVED ABSENT	a. MAXIMUM DAILY VALUE (1) CONCENTRATION	a. MAXIMUM DAILY VALUE (2) MASS	b. MAXIMUM 30 DAY VALUE (if available) (1) CONCENTRATION	b. MAXIMUM 30 DAY VALUE (if available) (2) MASS	c. LONG TERM AVRG. VALUE (if available) (1) CONCENTRATION	c. LONG TERM AVRG. VALUE (if available) (2) MASS	d. NO. OF ANALYSES	a. CONCENTRATION	b. MASS	a. LONG TERM AVERAGE VALUE (1) CONCENTRATION	a. LONG TERM AVERAGE VALUE (2) MASS	b. NO. OF ANALYSES
METALS, CYANIDE, AND TOTAL PHENOLS															
1M. Antimony, Total (7440-36-0)	X			<0.1	<0.52					1	mg/L	lbs			
2M. Arsenic, Total (7440-38-2) *	X			0.01	0.086			0.004	0.02	5	mg/L	lbs			
3M. Beryllium, Total, 7440-41-7)	X			<0.003	<0.016					1	mg/L	lbs			
4M. Cadmium, * Total (7440-43-9)	X			0	0					8	mg/L	lbs			
5M. Chromium, Total (7440-47-3)	X			0.70	34.3	0.303	1.953	0.127	0.758	96	mg/L	lbs			
6M. Copper, Total (7550-50-8)	X			2.08	17.6	1.20	5.08	0.494	2.95	96	mg/L	lbs			
7M. Lead, Total (7439-97-6) *	X			0.014	0.12			0.002	0.01	7	mg/L	lbs			
8M. Mercury, Total (7439-97-6) *	X			0	0					4	PPB	lbs			
9M. Nickel, Total (7440-02-0) *	X			0.28	1.45			0.03	0.18	9	mg/L	lbs			
10M. Selenium, Total (7782-49-2)	X			<0.005	<0.026					1	mg/L	lbs			
11M. Silver, Total (7440-22-4) *	X			0	0					7	mg/L	lbs			
12M. Thallium, Total (7440-28-0)	X			<0.1	<0.52					1	mg/L	lbs			
13M. Zinc, Total (7440-66-6)	X			1.74	6.99	0.234	1.524	0.10	0.53	42	mg/L	lbs			
14M. Cyanide, Total (57-12-5) *	X			0	0					2	mg/L	lbs			
15M. Phenols, Total	X			<0.03	<0.16					1	mg/L	lbs			
DIOXIN															
2,3,7,8-Tetrachlorodibenzo-P-Dioxin (1764-01-6)			X	DESCRIBE RESULTS											

EPA Form 3510-2C (6-80)

CONTINUE ON REVERSE

* The results include analyses performed by IEPA between 4/4/74 and 9/20/78.

CONTINUED FROM THE FRONT

1. POLLUTANT AND CAS NUMBER (if available)	2. MARK 'X'			3. EFFLUENT							4. UNITS		5. INTAKE (optional)		
	a. TESTING REQUIRED	b. BELIEVED PRESENT	c. BELIEVED ABSENT	a. MAXIMUM DAILY VALUE		b. MAXIMUM 30 DAY VALUE (if available)		c. LONG TERM AVRG. VALUE (if available)		d. NO. OF ANALYSES	a. CONCENTRATION	b. MASS	a. LONG TERM AVERAGE VALUE		b. NO. OF ANALYSES
				(1) CONCENTRATION	(2) MASS	(1) CONCENTRATION	(2) MASS	(1) CONCENTRATION	(2) MASS				(1) CONCENTRATION	(2) MASS	
GC/MS FRACTION – VOLATILE COMPOUNDS															
1V. Acrolein (107-02-8)	X			<200	<1.039					1	PPB	lbs			
2V. Acrylonitrile (107-13-1)	X			<100	<0.519					1	PPB	lbs			
3V. Benzene (71-43-2)	X			<10	<0.052					1	PPB	lbs			
4V. Bis *(Chloromethyl)* Ether (542-88-1)	X			<10	<0.052					1	PPB	lbs			
5V. Bromoform (75-25-2)	X			<10	<0.052					1	PPB	lbs			
6V. Carbon Tetrachloride (56-23-5)	X			<10	<0.052					1	PPB	lbs			
7V. Chlorobenzene (108-90-7)	X			<10	<0.052					1	PPB	lbs			
8V. Chlorodibromomethane (124-48-1)	X			<10	<0.052					1	PPB	lbs			
9V. Chloroethane (75-00-3)	X			<10	<0.052					1	PPB	lbs			
10V. 2-Chloroethylvinyl Ether (110-75-8)	X			<10	<0.052					1	PPB	lbs			
11V. Chloroform (67-66-3)	X			<10	<0.052					1	PPB	lbs			
12V. Dichlorobromomethane (75-27-4)	X			<10	<0.052					1	PPB	lbs			
13V. Dichlorodifluoromethane (75-71-8)	X			<10	<0.052					1	PPB	lbs			
14V. 1,1-Dichloroethane (75-34-3)	X			<10	<0.052					1	PPB	lbs			
15V. 1,2-Dichloroethane (107-06-2)	X			<10	<0.052					1	PPB	lbs			
16V. 1,1-Dichloroethylene (75-35-4)	X			<10	<0.052					1	PPB	lbs			
17V. 1,2-Dichloropropane (78-87-5)	X			<10	<0.052					1	PPB	lbs			
18V. 1,2-Dichloropropylene (542-75-6)	X			<10	<0.052					1	PPB	lbs			
19V. Ethylbenzene (100-41-4)	X			<10	<0.052					1	PPB	lbs			
20V. Methyl Bromide (74-83-9)	X			<10	<0.052					1	PPB	lbs			
21V. Methyl Chloride (74-87-3)	X			<10	<0.052					1	PPB	lbs			

CONTINUE ON PAGE V-5

CONTINUED FROM PAGE V-4

EPA I.D. NUMBER (copy from Item 1 of Form 1): ILD005078274

OUTFALL NUMBER: 001

Form Approved OMB No. 158-R0173

1. POLLUTANT AND CAS NUMBER (if available)	2. MARK 'X' a. TESTING REQUIRED	b. BELIEVED PRESENT	c. BELIEVED ABSENT	3. EFFLUENT a. MAXIMUM DAILY VALUE (1) CONCENTRATION	(2) MASS	b. MAXIMUM 30 DAY VALUE (if available) (1) CONCENTRATION	(2) MASS	c. LONG TERM AVRG. VALUE (if available) (1) CONCENTRATION	(2) MASS	d. NO. OF ANALYSES	4. UNITS a. CONCENTRATION	b. MASS	5. INTAKE (optional) a. LONG TERM AVERAGE VALUE (1) CONCENTRATION	(2) MASS	b. NO. OF ANALYSES
GC/MS FRACTION – VOLATILE COMPOUNDS *(continued)*															
22V. Methylene Chloride (75-09-2)	X			<10	<0.052					1	PPB	lbs			
23V. 1,1,2,2-Tetrachloroethane (79-34-5)	X			<10	<0.052					1	PPB	lbs			
24V. Tetrachloroethylene (127-18-4)	X			<10	<0.052					1	PPB	lbs			
25V. Toluene (108-88-3)	X			<10	<0.052					1	PPB	lbs			
26V. 1,2-Trans-Dichloroethylene (156-60-5)	X			<10	<0.052					1	PPB	lbs			
27V. 1,1,1-Trichloroethane (71-55-6)	X			<10	<0.052					1	PPB	lbs			
28V. 1,1,2-Trichloroethane (79-00-5)	X			<10	<0.052					1	PPB	lbs			
29V. Trichloroethylene (79-01-6)	X			<10	<0.052					1	PPB	lbs			
30V. Trichlorofluoromethane (75-69-4)	X			<10	<0.052					1	PPB	lbs			
31V. Vinyl Chloride (75-01-4)	X			<10	<0.052					1	PPB	lbs			
GC/MS FRACTION – ACID COMPOUNDS															
1A. 2-Chlorophenol (95-57-8)	X			<25	<0.13					1	PPB	lbs			
2A. 2,4-Dichlorophenol (120-83-2)	X			<25	<0.13					1	PPB	lbs			
3A. 2,4-Dimethylphenol (105-67-9)	X			<25	<0.13					1	PPB	lbs			
4A. 4,6-Dinitro-O-Cresol (534-52-1)	X			<250	<1.3					1	PPB	lbs			
5A. 2,4-Dinitrophenol (51-28-5)	X			<250	<1.3					1	PPB	lbs			
6A. 2-Nitrophenol (88-75-5)	X			<25	<0.13					1	PPB	lbs			
7A. 4-Nitrophenol (100-02-7)	X			<25	<0.13					1	PPB	lbs			
8A. P-Chloro-M-Cresol (59-50-7)	X			<25	<0.13					1	PPB	lbs			
9A. Pentachlorophenol (87-86-5)	X			<25	<0.13					1	PPB	lbs			
10A. Phenol (108-95-2)	X			<25	<0.13					1	PPB	lbs			
11A. 2,4,6-Trichlorophenol (88-06-2)	X			<25	<0.13					1	PPB	lbs			

CONTINUE ON REVERSE

CONTINUED FROM THE FRONT

1. POLLUTANT AND CAS NUMBER (if available)	2. MARK 'X' a. TESTING REQUIRED	b. BELIEVED PRESENT	c. BELIEVED ABSENT	3. EFFLUENT a. MAXIMUM DAILY VALUE (1) CONCENTRATION	(2) MASS	b. MAXIMUM 30 DAY VALUE (if available) (1) CONCENTRATION	(2) MASS	c. LONG TERM AVRG. VALUE (if available) (1) CONCENTRATION	(2) MASS	d. NO. OF ANALYSES	4. UNITS a. CONCENTRATION	b. MASS	5. INTAKE (optional) a. LONG TERM AVERAGE VALUE (1) CONCENTRATION	(2) MASS	b. NO. OF ANALYSES
GC/MS FRACTION – BASE/NEUTRAL COMPOUNDS															
1B. Acenaphthene (83-32-9)	X			<10	<0.052					1	PPB	lbs			
2B. Acenaphtylene (208-96-8)	X			<10	<0.052					1	PPB	lbs			
3B. Anthracene (120-12-7)	X			<10	<0.052					1	PPB	lbs			
4B. Benzidine (92-87-5)	X			<10	<0.052					1	PPB	lbs			
5B. Benzo *(a)* Anthracene (56-55-3)	X			<10	<0.052					1	PPB	lbs			
6B. Benzo *(a)* Pyrene (50-32-8)	X			<10	<0.052					1	PPB	lbs			
7B. 3,4-Benzo-fluoranthene (205-99-2)	X			<10	<0.052					1	PPB	lbs			
8B. Benzo *(ghi)* Perylene (191-24-2)	X			<25	<0.13					1	PPB	lbs			
9B. Benzo *(k)* Fluoranthene (207-08-9)	X			<10	<0.052					1	PPB	lbs			
10B. Bis *(2-Chloro-ethoxy)* Methane (111-91-1)	X			<10	<0.052					1	PPB	lbs			
11B. Bis *(2-Chloro-ethyl)* Ether (111-44-4)	X			<10	<0.052					1	PPB	lbs			
12B. Bis *(2-Chloro-isopropyl)* Ether (39638-32-9)	X			<10	<0.052					1	PPB	lbs			
13B. Bis *(2-Ethyl-hexyl)* Phthalate (117-81-7)	X			<10	<0.052					1	PPB	lbs			
14B. 4-Bromo-phenyl Phenyl Ether (101-55-3)	X			<10	<0.052					1	PPB	lbs			
15B. Butyl Benzyl Phthalate (85-68-7)	X			<10	<0.052					1	PPB	lbs			
16B. 2-Chloro-naphthalene (91-58-7)	X			<10	<0.052					1	PPB	lbs			
17B. 4-Chloro-phenyl Phenyl Ether (7005-72-3)	X			<10	<0.052					1	PPB	lbs			
18B. Chrysene (218-01-9)	X			<10	<0.052					1	PPB	lbs			
19B. Dibenzo *(a,h)* Anthracene (53-70-3)	X			<25	<0.13					1	PPB	lbs			
20B. 1,2-Dichloro-benzene (95-50-1)	X			<10	<0.052					1	PPB	lbs			
21B. 1,3-Dichloro-benzene (541-73-1)	X			<10	<0.052					1	PPB	lbs			

CONTINUE ON PAGE V-7

EPA I.D. NUMBER (copy from Item 1 of Form 1)	OUTFALL NUMBER
ILD005078274	001

CONTINUED FROM PAGE V-6

Form Approved OMB No. 158-R0173

1. POLLUTANT AND CAS NUMBER (if available)	2. MARK 'X'			3. EFFLUENT							4. UNITS		5. INTAKE (optional)		
	a. TESTING REQUIRED	b. BELIEVED PRESENT	c. BELIEVED ABSENT	a. MAXIMUM DAILY VALUE		b. MAXIMUM 30 DAY VALUE (if available)		c. LONG TERM AVRG. VALUE (if available)		d. NO. OF ANALYSES	a. CONCENTRATION	b. MASS	a. LONG TERM AVERAGE VALUE		b. NO. OF ANALYSES
				(1) CONCENTRATION	(2) MASS	(1) CONCENTRATION	(2) MASS	(1) CONCENTRATION	(2) MASS				(1) CONCENTRATION	(2) MASS	
GC/MS FRACTION – BASE/NEUTRAL COMPOUNDS *(continued)*															
22B. 1,4-Dichlorobenzene (106-46-7)	X			<10	<0.052					1	PPB	lbs			
23B. 3,3'-Dichlorobenzidine (91-94-1)	X			<10	<0.052					1	PPB	lbs			
24B. Diethyl Phthalate (84-66-2)	X			<10	<0.052					1	PPB	lbs			
25B. Dimethyl Phthalate (131-11-3)	X			<10	<0.052					1	PPB	lbs			
26B. Di-N-Butyl Phthalate (84-74-2)	X			<10	<0.052					1	PPB	lbs			
27B. 2,4-Dinitrotoluene (121-14-2)	X			<10	<0.052					1	PPB	lbs			
28B. 2,6-Dinitrotoluene (606-20-2)	X			<10	<0.052					1	PPB	lbs			
29B. Di-N-Octyl Phthalate (117-84-0)	X			<10	<0.052					1	PPB	lbs			
30B. 1,2-Diphenylhydrazine *(as Azobenzene)* (122-66-7)	X			<10	<0.052					1	PPB	lbs			
31B. Fluoranthene (206-44-0)	X			<10	<0.052					1	PPB	lbs			
32B. Fluorene (86-73-7)	X			<10	<0.052					1	PPB	lbs			
33B. Hexachlorobenzene (118-71-1)	X			<10	<0.052					1	PPB	lbs			
34B. Hexachlorobutadiene (87-68-3)	X			<10	<0.052					1	PPB	lbs			
35B. Hexachlorocyclopentadiene (77-47-4)	X			<10	<0.052					1	PPB	lbs			
36B. Hexachloroethane (67-72-1)	X			<10	<0.052					1	PPB	lbs			
37B. Indeno *(1,2,3-cd)* Pyrene (193-39-5)	X			<25	<0.13					1	PPB	lbs			
38B. Isophorone (78-59-1)	X			<10	<0.052					1	PPB	lbs			
39B. Naphthalene (91-20-3)	X			<10	<0.052					1	PPB	lbs			
40B. Nitrobenzene (98-95-3)	X			<10	<0.052					1	PPB	lbs			
41B. N-Nitrosodimethylamine (62-75-9)	X			<10	<0.052					1	PPB	lbs			
42B. N-Nitrosodi-N-Propylamine (621-64-7)	X			<10	<0.052					1	PPB	lbs			

CONTINUE ON REVERSE

CONTINUED FROM THE FRONT

1. POLLUTANT AND CAS NUMBER (if available)	2. MARK 'X'			3. EFFLUENT							4. UNITS		5. INTAKE (optional)		
	a. TESTING REQUIRED	b. BELIEVED PRESENT	c. BELIEVED ABSENT	a. MAXIMUM DAILY VALUE		b. MAXIMUM 30 DAY VALUE (if available)		c. LONG TERM AVRG. VALUE (if available)		d. NO. OF ANALYSES	a. CONCENTRATION	b. MASS	a. LONG TERM AVERAGE VALUE		b. NO. OF ANALYSES
				(1) CONCENTRATION	(2) MASS	(1) CONCENTRATION	(2) MASS	(1) CONCENTRATION	(2) MASS				(1) CONCENTRATION	(2) MASS	
GC/MS FRACTION – BASE/NEUTRAL COMPOUNDS *(continued)*															
43B. N-Nitrosodiphenylamine (86-30-6)	X			10	0.052					1	PPB	lbs			
44B. Phenanthrene (85-01-8)	X			10	0.052					1	PPB	lbs			
45B. Pyrene (129-00-0)	X			10	0.052					1	PPB	lbs			
46B. 1,2,4 - Trichlorobenzene (120-82-1)	X			10	0.052					1	PPB	lbs			
GC/MS FRACTION – PESTICIDES															
1P. Aldrin (309-00-2)			X												
2P. α-BHC (319-84-6)			X												
3P. β-BHC (319-85-7)			X												
4P. γ-BHC (58-89-9)			X												
5P. δ-BHC (319-86-8)			X												
6P. Chlordane (57-74-9)			X												
7P. 4,4'-DDT (50-29-3)			X												
8P. 4,4'-DDE (72-55-9)			X												
9P. 4,4'-DDD (72-54-8)			X												
10P. Dieldrin (60-57-1)			X												
11P. α-Endosulfan (115-29-7)			X												
12P. β-Endosulfan (115-29-7)			X												
13P. Endosulfan Sulfate (1031-07-8)			X												
14P. Endrin (72-20-8)			X												
15P. Endrin Aldehyde (7421-93-4)			X												
16P. Heptachlor (76-44-8)			X												

CONTINUE ON PAGE V-9

CONTINUED FROM PAGE V-8

EPA I.D. NUMBER (copy from Item 1 of Form 1)	OUTFALL NUMBER
ILD005078274	001

Form Approved OMB No. 158-R0173-

1. POLLUTANT AND CAS NUMBER (if available)	2. MARK 'X'			3. EFFLUENT							4. UNITS		5. INTAKE (optional)		
	a. TESTING REQUIRED	b. BELIEVED PRESENT	c. BELIEVED ABSENT	a. MAXIMUM DAILY VALUE		b. MAXIMUM 30 DAY VALUE (if available)		c. LONG TERM AVRG. VALUE (if available)		d. NO. OF ANALYSES	a. CONCENTRATION	b. MASS	a. LONG TERM AVERAGE VALUE		b. NO. OF ANALYSES
				(1) CONCENTRATION	(2) MASS	(1) CONCENTRATION	(2) MASS	(1) CONCENTRATION	(2) MASS				(1) CONCENTRATION	(2) MASS	
GC/MS FRACTION – PESTICIDES *(continued)*															
17P. Heptachlor Epoxide (1024-57-3)			X												
18P. PCB-1242 (53469-21-9)			X												
19P. PCB-1254 (11097-69-1)			X												
20P. PCB-1221 (11104-28-2)			X												
21P. PCB-1232 (11141-16-5)			X												
22P. PCB-1248 (12672-29-6)			X												
23P. PCB-1260 (11096-82-5)			X												
24P. PCB-1016 (12674-11-2)			X												
25P. Toxaphene (8001-35-2)			X												