RMT

• ENVIRONMENT • ENERGY • ENGINEERING

Soil Erosion and Sediment Control Plan
MW-19/Hot Spot 1 Soil Remediation

Dayco Corporation/L.E. Carpenter & Company Superfund Site
Borough of Wharton, Morris County, New Jersey

USEPA ID No. NJD002168748

December 2009

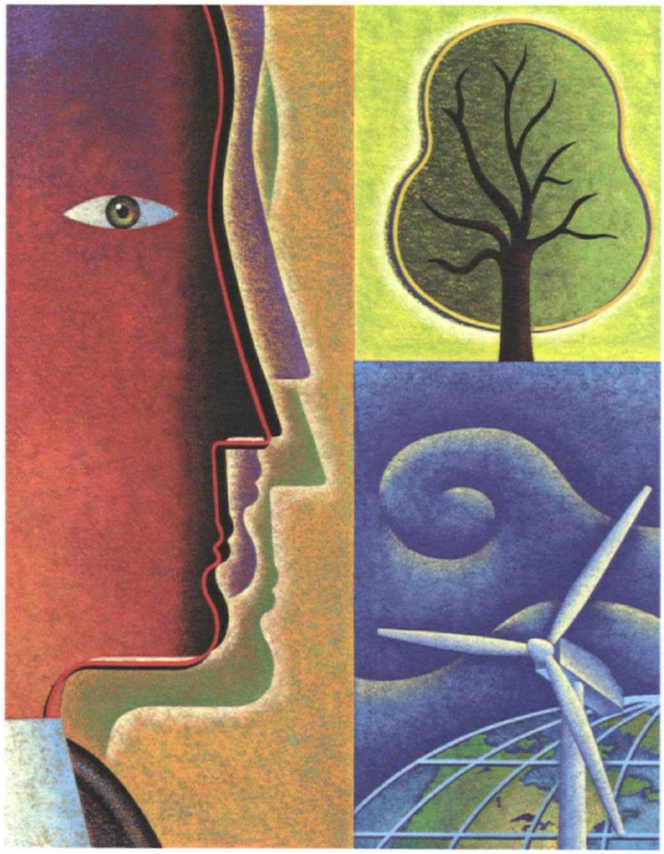

281861

CREATING BALANCE℠

RMT

ENVIRONMENT • ENERGY • ENGINEERING

Soil Erosion and Sediment Control Plan
MW-19/Hot Spot 1 Soil Remediation

Dayco Corporation/L.E. Carpenter & Company Superfund Site
Borough of Wharton, Morris County, New Jersey

USEPA ID No. NJD002168748

December 2009

Prepared For
L.E. Carpenter & Company

Nicholas J. Clevett
Project Coordinator

Amanda Rogers for
Daniel E. Oman, P.E.
Certifying Engineer

© 2009 RMT, Inc.
All Rights Reserved

CREATING BALANCE℠

Table of Contents

1. Introduction 1-1

2. Topography 2-1

3. Soil and Cover Description 3-1

4. Proposed Alteration Area 4-1

5. Site Runoff and Run-on 5-1

6. Construction Sequence and Staging 6-1

7. Temporary Control Measures and Facilities 7-1

8. Best Management and Permanent Control Measures 8-1

9. Maintenance Program 9-1

10. Construction Specifications 10-1
    - 10.1 General 10-1
    - 10.2 Sediment Control (Silt) Fence 10-1
      - 10.2.1 Materials 10-1
      - 10.2.2 Installation 10-1
    - 10.3 Topsoil 10-2
      - 10.3.1 Materials 10-2
      - 10.3.2 Preparation 10-2
      - 10.3.3 Placement 10-2
    - 10.4 Seeding 10-2
      - 10.4.1 Seed Mixture 10-3
      - 10.4.2 Accessories 10-3
      - 10.4.3 Application 10-3
      - 10.4.4 Hydroseeding 10-3
      - 10.4.5 Mulching 10-3
      - 10.4.6 Watering 10-4
      - 10.4.7 Germination 10-4
    - 10.5 Fertilizing 10-4
      - 10.5.1 Fertilizer Mixture 10-4
      - 10.5.2 Execution 10-4

List of Figures

Figure F1	Title Sheet / Drawing Index
Figure F2	Site Features, Topography and Surficial Drainage Patterns
Figure F3	Floodplain, Floodway, and Wetland Map
Figure F4	USDA Soil Types
Figure F5	MW19HS1 Construction Site Layout
Figure F6	Final Grade and End Use Plan
Figure F7	MW19HS1 Construction Details

List of Appendices

Appendix A	Application for Soil Erosion and Sediment Control Plan Certification
Appendix B	Morris County Soil Conservation District Engineering Details

Section 1
Introduction

Pursuant to the requirements of the N.J. Soil Erosion and Sedimentation Control Act, Chapter 251, P.L. 1975, this Soil Erosion and Sedimentation Control Plan (SESC Plan) has been prepared for the planned MW-19/Hot Spot 1 (MW19HS1) Area of Concern (AOC) soil remediation at the Dayco Corporation/L. E. Carpenter & Company (LEC) Superfund Site, located at 170 North Main St. in the Borough of Wharton, Morris County, New Jersey (the "Site") (Figure F1). The MW19HS1 AOC has been under investigation, remediation, and monitoring since impact was first discovered following the removal of two underground storage tanks (USTs) in 1990. The planned remediation is being performed to comply with the 2009 Administrative Order (AO) and associated Statement of Work (SOW), and is designed to maximize the removal of contaminant mass in the unsaturated soils to further enhance natural degradation of contaminants of concern (COCs) dissolved in shallow groundwater.

Prior to the planned MW19HS1 remediation activities, Building 9 as shown on Figures F2 and F3, will be demolished, any recyclable materials reclaimed, and debris transported to an approved off-site disposal facility. The building demolition phase of the project, specifically tearing down and removing all above-slab building structures, is not part of the remediation scope of work nor discussed in detail within this SESC Plan as no ground disturbance is anticipated during the demolition phase of work. Soil remediation activities for the MW19HS1 AOC that are expected to cause an earth disturbance of greater than 5,000 square feet and therefore subject to SESC requirements, include:

- Installation of appropriate soil erosion control measures to minimize potential for accelerated erosion and sedimentation impacts to surface water,
- removal of surface concrete to expose underlying soil,
- excavation of impacted soils,
- backfilling the excavation with clean, compacted fill,
- rough and final grading of site soils, and
- installation of a final stabilized surface consisting of a topsoil and vegetative cover.

The Morris County Soil Conservation District (MCSCD) requires this SESC Plan be available for on-site inspection throughout the project construction period.

This SESC Plan was prepared in accordance with (1) the requirements of Chapter 251, and follows the Standards for Soil Erosion and Sediment Control in New Jersey (NJ SESC

Standards) as adopted in July 1999, and (2) the Morris County Soil Conservation District Soil Erosion and Sediment Control Notes (May 2006) and Checklist. A completed Application for SESC Plan Certification is included in Appendix A.

Section 2
Topography

An insert taken from the Dover, New Jersey 7.5 minute U.S.G.S. Quadrangle Map dated 1954, Photorevised 1981, is presented on Figure F1. This map includes relative local features within the vicinity of the Site. The Site is located at 170 North Main Street, Borough of Wharton, Morris County, New Jersey, comprises Block 301, Lot 1 and Block 801, Lot 3 on the Borough of Wharton tax map, and occupies 14.6 acres of vacant land in a mixed-use industrial, commercial and residential area. The Site is bordered to the south by the Rockaway River; by a vacant lot (Wharton Enterprises) to the east-southeast; and by a former compressed gas facility (Air Products) to the northeast. A residential area borders the site to the northwest (Ross Street) and a commercial property the site to the west (Main Street). A drainage ditch is located between the Air Products property and the Site. A pedestrian foot trail (rails-to-trails area) owned by the Borough of Wharton and constructed along the former railroad right-of-way, and bisects the site from north to south. During active LEC operations, the site consisted of several buildings and structures, some of which were partially demolished during the early 1990's as part of site decommissioning activities. Buildings 8, 9, 15, 16 and 17 located to the west of the rails-to-trails area currently remain. Building 9 demolition activities commenced in December 2009. The remaining buildings will be demolished prior to the implementation of the North Main Street Expansion project discussed in Section 8 of this Plan.

The MW19HS1 AOC, the focus of this SESC Plan, is located at the northwest corner of the Site. Figure F2 contains detailed site-specific information for the MW19HS1 soil remediation area, including building locations, topography and other surficial features including predominant surficial drainage patterns. Site contours are shown at one-foot vertical intervals. Total relief within the MW19HS1 area to be disturbed is approximately 10 feet with the highest surficial elevation at the northwestern border of the area to be disturbed (near the corner of North Main Street and Ross Street). Natural slopes within the area to be disturbed average approximately 2.5 percent.

Figure F3 delineates the designated wetlands, flood plain areas, the flood way, and flood hazard areas at the Site. The flood limits were determined from the Federal Emergency Management (FEMA) Flood Insurance Agency Rate Map, Community Panel No. 340364 0001B by J. F. New and Associates on behalf of RMT in April 2004, and confirmed by previous projections by RMT from NJDEP Division of Water Resources Flood Hazard Area maps for Wharton Borough. Any backfill and regrading of surfaces adjacent to or within the 100-year flood plain will be restored to currently existing ground elevations, thus not changing the flood plain capacity for the

100-year flood. Following the removal of the existing impacted soils, a combination of imported gravel fill, clean crushed concrete from the Building 9 demolition, and stockpiled/imported topsoil will be placed so that final grades are at the currently existing grades over the of the MW19HS1 area of the Site.

No excavation or grading is planned within the Rockaway River flood way or regulated wetlands; therefore flood way capacity will not be diminished as a result of the planned soil remediation activities. In addition, no excavation or grading will be performed within any of the wetlands located at the Site.

Section 3
Soil and Cover Description

The USDA-SCS Soil Survey of Morris County (see Figure F4) indicates that site soils are predominantly urban (made) land, and very stony Ridgebury and Whitman Loams. The site is in a glacial outwash valley that was incised through the terminal glacial moraine of Wisconsinan age. Extensive subsurface investigations have been performed over the past fifteen years at the site, and indicate the site to be underlain by cobble-boulder glacial outwash with a thin wedge of siltier coarse-grained alluvium along the east edge and lowland perimeter. The soils are not acidic and do not overlie karstic bedrock.

The site has been heavily disturbed by industrial activities, building demolition, investigation, and remediation. The potential for erosion is minimal due to low slopes across the site. Regardless, erosion control considerations are conservative to minimize loss of potentially contaminated materials to surface water and other environmentally sensitive areas (*i.e.*, wetlands systems) during remediation efforts.

After excavation and backfilling, surface restoration activities will be conducted to effectively maintain a permanent stabilized soil surface including the establishment of a vegetative cover.

Section 4
Proposed Alteration Area

The total area involved in the MW19HS1 AOC remediation activities including staging, stockpiling, and excavation totals approximately 2.3 acres. The area to be excavated backfilled and re-graded comprises an area of approximately 8,350 ft^2 (0.2 acres). The limits of disturbance are delineated on Figures F2 and F5.

The planned remediation activities at the site involve the excavation of approximately 2,550 cubic yards (CY) of soil of which approximately 1,115 CY will be reused as backfill and the remainder that is thought to be contaminated with benzene, toluene, ethylbenzene, and xylene (BTEX) and bis (2-ethylhexyl) phthalate (DEHP) will be removed to off-site licensed disposal facilities.

The disturbed areas are configured to be the minimum possible, while allowing effective and efficient construction operations such that the objectives of the Remedial Action are achieved. Although no deviations from this plan are expected at this time, if minor changes are required during construction to more effectively achieve source reduction objectives, Morris County Soil Conservation District will be notified immediately of the requested change in construction sequence or configuration. Staging and stockpiling areas will be located east of the planned excavation area.

Section 5
Site Runoff and Run-on

All disturbed areas fall within the Rockaway River watershed. Natural runoff from the MW19HS1 site is to the east. Site surface water drainage patterns are delineated on Figure F2.

No drainage ways or swales are present through the excavation area; all runoff is by sheet flow towards the east. As the final topographic surface is not planned to be steepened, and augmentation of existing vegetative cover is planned, no other drainage improvements are deemed necessary.

Silt fencing will be placed along-contour down-slope of all excavation and stockpile areas as shown on Figure F5 and inlet filters will be placed at encountered surface water inlet structures prior to any earth disturbance.

Section 6
Construction Sequence and Staging

Site work is anticipated to start and be completed in first quarter 2010 (1Q10). Construction sequencing will be such that temporary erosion control measures will be established in all impacted areas prior to significant soil disturbances. Additional information pertaining to the location and design of erosion control measures is provided in Sections 7 and 8, and on Figures F5 and F7.

The importance of erosion protection and the maintenance of such controls on this site are understood. Erosion controls will be inspected, and replaced or repaired, if necessary, on a daily basis. General sequencing of the site tasks and erosion and sedimentation control actions will be as follows:

1. At least 7 days before starting any earth disturbance activities, as an agent of the owner, the RMT Construction Manager shall invite all subcontractors involved in the soil remediation activities and a representative of the Morris County Soil Conservation District to an on-site pre-construction meeting.
2. Not less than 3 business days before any earth disturbance (and not more than 10 business days), the Construction Manager shall notify the New Jersey One Call System at (800) 272-1000 to locate buried off-site utilities that are entering the property.
3. The stabilized construction entrance to the site will be installed as shown on F5 and detailed on Figure F7.
4. Silt fencing will be installed along-contour and down-slope of the excavation and proposed stockpile areas as shown on Figures F5 and detailed on F7.
5. Soil excavation will then proceed as follows:
    - Remove the Building 9 concrete slab (within the limits of excavation) to expose targeted soils.
    - Crush and stockpile slab concrete for potential reuse as excavation backfill (Ref. detail F7).
    - Remove and dispose (off-site) targeted soils. Unstable steep stockpile sideslopes more prone to erosive forces will be avoided. Plastic sheeting will be place atop any stockpiled soils and secured at the end of each work day to minimize erosion potential from precipitation events.
    - Once excavation is deemed complete, backfill the excavation as detailed on F7.
    - Place and grade topsoil to serve as a permanent stabilized surface cover.

- Apply fertilizer, grass seed, mulch, and mulch binder to facilitate the establishment of a permanent vegetative cover. Irrigation will be performed as necessary.

6. Site inspections to assess surface erosion will occur following storm events until permanent vegetation is established. After vegetation is established, the silt fence will be sequentially removed by the contractor and disposed of at an approved facility.

Section 7
Temporary Control Measures and Facilities

Figures F5 and F7 show the location, and details, of proposed temporary erosion control measures. Specific information pertaining to erosion controls is presented in the attached Construction Specifications (Appendix B).

Design requirements for silt fencing meet the NJ SESC Standards provided by the Morris County Soil Conservation District (see Figure F7 and Appendix B). Silt fencing will be installed along the western and southern limit of disturbance boundary of the MW19HS1site down slope of the excavation as depicted in Figure F5. Silt fencing will also be installed down slope of all proposed stockpile areas. The contributing areas above the planned segments of silt fencing are small (< 1 acre) and at a low slope (<2.5 percent). No excavation incursion into the Rockaway Flood Way are planned as part of this SESC application; however excavation and grading will occur within the 100-year flood plain.

Any surface water inlet structures identified within the construction zone will be protected by installing inlet filters. Inlet protection will meet the NJ SESC Standards as provided by the Morris County Soil Conservation District (see Appendix B).

A decontamination pad and stabilized stone entrance will be installed at the entrance/exit of the construction zone to eliminate the potential for tracking sediment off-site onto public streets, (See Figures F5 and F7).

Section 8
Best Management and Permanent Control Measures

This source removal remedial action is in itself a Best Management Practice (BMP) for this site, as one of the primary purposes of this action is to remove the potential for direct contact and off-site migration of contaminated soils. The project will incorporate temporary and permanent BMP elements. Temporary BMP elements including the use of silt fences, a stabilized construction entrance, and a decontamination pad at the construction entrance will be utilized throughout the project.

The soil cover system including topsoil, seed, mulch, and mulch binder will serve as a permanent control measure once vegetation is established in the cover layer. Following final grading, the topsoil will be seeded, fertilized and mulched in accordance with the Specifications included as part of this SESC Plan. The proposed final grading plan, which includes establishing pre-excavation grades and the most updated end use for the western portion of the site (North Main Street Extension Project), is shown on Figure F6. A final end use plan for the MW19HS1 area has not been identified at the time of this SESC Plan submittal, all areas disturbed during the remediation activities will be graded and seeded allowing for a variety of future end use plans. Details of other design features and grading cross-sections are shown on Figures F5 and F7.

Section 9
Maintenance Program

Temporary erosion control measures will be inspected daily and after rainfall events during the construction period, and inspection events will be documented in daily field records. Sediments trapped by the silt fence will be removed from the face of the fence once these materials reach 50 percent of the silt fence height. Additional measures will be taken to minimize erosion and sedimentation as necessary. Restored areas will be re-mulched and reseeded as necessary to establish a vegetative cover over disturbed areas as shown on Figure F5, and the Construction Specifications (Ref. Section 10).

The stabilized construction entrance will be redressed as necessary to prevent potentially contaminated materials from leaving the site. All preventative and remedial maintenance work, including clean out, repair, replacement, regrading, reseeding, re-mulching and renetting will be performed immediately following the identification of a deficiency. If erosion and sediment control BMPs fail to perform as expected, replacement BMPs or modifications of those installed will be implemented and the MCSCD will be updated.

After establishing vegetation, temporary control materials will be sequentially removed and disposed of at an approved facility.

Section 10
Construction Specifications

10.1 General

Except as modified within this SESC Plan the construction specifications for erosion and sedimentation control materials and installation requirements are as outlined below. Additional Morris County Soil Conservation District Engineering Details are included in Appendix B.

10.2 Sediment Control (Silt) Fence

Silt fencing shall be installed at the locations shown on the SESC Plan Figure F5 and as follows:

10.2.1 Materials

Materials for sediment control fencing shall be provided by the following vendors or approved equivalent vendors:

- Mirafi Civil Engineering Fabrics
  P.O. Box 240967
  Charlotte, NC 28224
- CONTECH Construction Products
  Fenton Street
  Palmer, MA 01069
- Synthetic Industries
  Geosynthetic Products Division
  4019 Industry Drive
  Chattanooga, TN 37416

10.2.2 Installation

1. Install hardwood posts 2 feet below grade, at maximum 8-foot spacing.
2. Anchor bottom 6 inches of fence netting below grade to create a continuous toe-in structure along fence installation.
3. Install fence in areas designated on Figure F5.

10.3 Topsoil

Areas that have been excavated, regraded, and prepared for vegetative cover are to be topsoiled as follows:

10.3.1 Materials

1. Friable, fertile, loamy soil containing 2.75 percent organic matter and capable of sustaining healthy plant life.
2. Free from refuse subsoils, materials toxic to plant growth, foreign objects, and rocks greater than 2-inches in diameter.

10.3.2 Preparation

1. Remove vegetation, foreign materials, unsatisfactory or contaminated soils, obstructions, and matter harmful to plant growth from ground surface before placement.
2. Prepare subsoil to eliminate uneven areas and low spots. Maintain lines, levels, profiles and contours. Make changes in grade gradual. Blend slopes into level areas.
3. Scarify subsoil to a depth of 3 inches where Topsoil is to be placed. Repeat cultivation in areas where equipment used for hauling and spreading Topsoil has compacted subsoil.
4. Grade Topsoil to finish grades to ensure positive drainage.
5. Apply fertilizer immediately before seeding in accordance with the specifications in Section 10.5

10.3.3 Placement

1. Handle topsoil only when dry enough to work without damaging soil structure
2. Place Topsoil to a uniform depth of 5 inches.
3. Finish grade to match with existing grades.
4. Break down clods and lumps.
5. Disking limestone to a depth of 4 inches at an application rate of 90 lbs per 1000 square foot (sf)

10.4 Seeding

Those areas designated for topsoil and seeding will be seeded as follows unless specified otherwise in agreement with the Borough of Wharton.

10.4.1 Seed Mixture

1. Hard Fescue: 2.7 lbs per 1000 sf
2. Creeping Red Fescue: 0.7 lbs per 1000 sf
3. Perennial Ryegrass: 0.25 lbs per 1000 sf

10.4.2 Accessories

1. Mulching Material: Oat or wheat straw, free from weeds, foreign matter detrimental to plant life, and dry. Hay or chopped cornstalks are not acceptable. Apply at a rate of 90 lbs per 1000 sf.
2. Apply a liquid mulch binder or tack to straw or hay mulch.
3. Water: Clean, fresh, and free of substances or matter, which could inhibit vigorous growth of grass.

10.4.3 Application

1. Apply seed at a rate specified by the mix outlined above evenly in two intersecting directions. Fine rake in place.
2. Do not sow immediately following rain, or when ground is too dry, or during windy periods.
3. Seeding may be accomplished between March 1 and November 15

10.4.4 Hydroseeding

1. A hydroseeder may be used if deemed more appropriate for seeding, particularly for slopes. If used, the hydroseeder shall have continuous agitating action that keeps the seed uniformly mixed in the slurry until pumped from the tank.
2. Apply seeded slurry evenly in two intersecting directions, with a hydraulic seeder. Do not hydroseed area in excess of that which can be mulched on the same day.

10.4.5 Mulching

1. Apply mulch to the seeded area at a rate of 50 pounds per 1000 square feet.
2. Immediately following mulching, roll-mulched area. On large areas, a cultipacker may be used to roll and cover the seed.

10.4.6 Watering

1. Apply water with a fine spray immediately after each area has been mulched. Saturate soil to a depth of 4 inches.
2. Keep the surface layer, of soil, damp by frequent light watering with a fine spray during the germination period when rainfall is insufficient.

10.4.7 Germination

All seeding work shall be maintained until full germination is accomplished. If required, resoil, reseed, and refertilize until a satisfactory stand of grass is accomplished.

10.5 Fertilizing

10.5.1 Fertilizer Mixture

Fertilizer is recommended for grass, with fifty percent of the elements derived from organic sources; to the following proportions: nitrogen 10 percent, phosphoric acid 20 percent, soluble potash 10 percent at a rate of 11 lbs per 1000 sf.

10.5.2 Execution

1. Apply fertilizer in accordance with manufacturer's instructions.
2. Apply after topsoil is raked smooth and prior to roller compaction.
3. Do not apply fertilizer at same time or with same machine that will be used to apply seed.
4. Mix thoroughly into upper 2 inches of topsoil.
5. Lightly water to aid the dispersion of fertilizer.

Appendix A
Application for Soil Erosion and Sediment Control Plan Certification

New Jersey Natural Resources Conservation Program

For District Use Only

APPLICATION FOR SOIL EROSION AND SEDIMENT CONTROL PLAN CERTIFICATION

The enclosed soil erosion and sediment control plan and supporting information are submitted for certification pursuant to the Soil Erosion and Sediment Control Act, Chapter 251, P.L. 1975 as amended (NJSA 4:24-39 et. seq.) An application for certification of a soil erosion and sediment control plan shall include the items listed on the reverse side of this form.

Name of Project MW19/Hot Spot 1 Remedial Action		Project Location: Municipality Wharton, New Jersey	
Project Street Address 170 North Main Street		Block 301	Lot 1
Project Owner(s) Name Dayco/L.E. Carpenter & Company Superfund Site			Phone # Fax #
Project Owner(s) Street Address (No P.O. Box Numbers) 170 North Main Street		City Wharton	State NJ Zip 07885
Total Area of Project (Acres) 2.3	Total Area or Land to be Disturbed (Acres) 0.2	No. Dwelling or other Units N/A	Fee $ 700.00
Plans Prepared by* RMT, Inc.			Phone # 616-975-5415 Fax # 616-975-1098
Street Address 2025 East Beltline Ave. S.E.		City Grand Rapids	State MI Zip 49546

*(Engineering related items of the Soil Erosion and Sediment Control Plan MUST be prepared by or under the direction of and be sealed by a Professional Engineer or Architect licensed in the State of New Jersey, in accordance with NJAC 13:27-6.1 et. seq.)

Agent Responsible During Construction RMT. Inc.	
Street Address 2025 East Beltline Ave. S.E.	
City Grand Rapids State MI Zip 49546	Phone 616-975-5415 Fax # 616-975-1098

The applicant hereby certifies that all soil erosion and sediment control measures are designed in accordance with current **Standards for Soil Erosion and Sediment Control In New Jersey** and will be installed in accordance with those Standards and the plan as approved by the Soil Conservation District and agrees as follows:

1. To notify the District in writing at least 48 hours in advance of any land disturbance activity. Failure to provide such notification may result in additional inspection fees.
2. To notify the District upon completion of the Project (Note: No certificate of occupancy can be granted until a report of compliance is issued by the District.
3. To maintain a copy of the certified plan on the project site during construction.
4. To allow District agents to go upon project lands for inspection.
5. That any conveyance of this project or portion thereof prior to its completion will transfer full responsibility for compliance with the certified plan to any subsequent owners.
6. To comply with all terms and conditions of this application and certified plan including payment of all fees prescribed by the district fee schedule hereby incorporated by reference.

The applicant hereby acknowledges that structural measures contained in the Soil Erosion and Sediment Control Plan are reviewed for adequacy to reduce offsite soil erosion and sedimentation and not for adequacy of structural design. The applicant shall retain full responsibility for any damages which may result from any construction activity notwithstanding district certification of the subject soil erosion and sediment control plan. It is understood that approval of the plan submitted with this application shall be valid only for the duration of the initial project approval granted by the municipality. All municipal renewals of this project will require submission and approval by the district. In no case shall the approval extend beyond three and one half years at which time resubmission and certification will be required. Soil Erosion and Sediment Control Plan certification is limited to the controls specified in the plan. It is not authorization to engage in the proposed land use unless such use has been previously approved by the municipality or other controlling agency. It is further understood that all documents, site plans, design reports etc. submitted to the district shall be made available to the public (upon request) pursuant to the Open Public Records Act, N.J.S.A. 47:1A-1 et seq.

1. Applicant Certification* Signature Ernie Schaub Date 17 DECEMBER '09 Applicant Name (Print) Ernie Schaub	3. Plan determined complete: Signature of District Official Date
2. Receipt of fee, plan and supporting documents is hereby acknowledged: Signature of District Official Date	4. Plan certified, denied or other actions noted above. Special Remarks: Signature of District Official Date

***If other than project owner, written authorization of owner must be attached.**

ADDENDUM

OWNERSHIP DISCLOSURE AFFIDAVIT

APPLICATION BY CORPORATION OR PARTNERSHIP

All applicants for Soil Erosion and Sediment Control Plan Certification are requested to submit a list of project owners on this form for purposes of determining potential conflicts of interest between the applicant and Soil Conservation District Officials. Attach rider if necessary.

A Corporation must also indicate its Registered Agent and Officers.

A Corporation or Partnership applying to the Soil Conservation District for plan certification, or applying for other approvals shall list the names and addresses of all stockholders or individual partners owning at least 10% of its stock of any class, or at least 10% of the interest in the partnership, as the case may be.

This disclosure requirement is continuing during the Certification period. Any transfer of ownership of more than 10% must be disclosed to the district.

Name and Address of Applicant
L.E. Carpenter & Company (LEC), 170 N. Main Street, Wharton, NJ 07885

If Corporation: Name and Address of Registered Agent and Officers:
Richard Hahn, Assistant Secretary, 33587 Walker Road, Avon Lake, OH 44012

Stockholders/Partners with more than 10% ownership in the projects:

1. L.E. Carpenter & Company
2.
3.
4.

Sworn to and subscribed before me
this 17th Day of December 2009

Tracy L. Fenton
NOTARY PUBLIC OF ~~NEW JERSEY~~ Ohio

Richard E. Hahn
Print Name of Authorized Signatory

Richard E. Hahn 12/17/09
Authorized Signature/Date

Assistant Secretary
Title

P:\Forms\ADDENDUM TO APPLICATION.doc

TRACY L. FENTON
Notary Public, State of Ohio, Cuy. Cty.
My Commission Expires May 25, 2010

Appendix B
Morris County Soil Conservation District
Engineering Details

Figure 29-1: Stabilized Construction Access

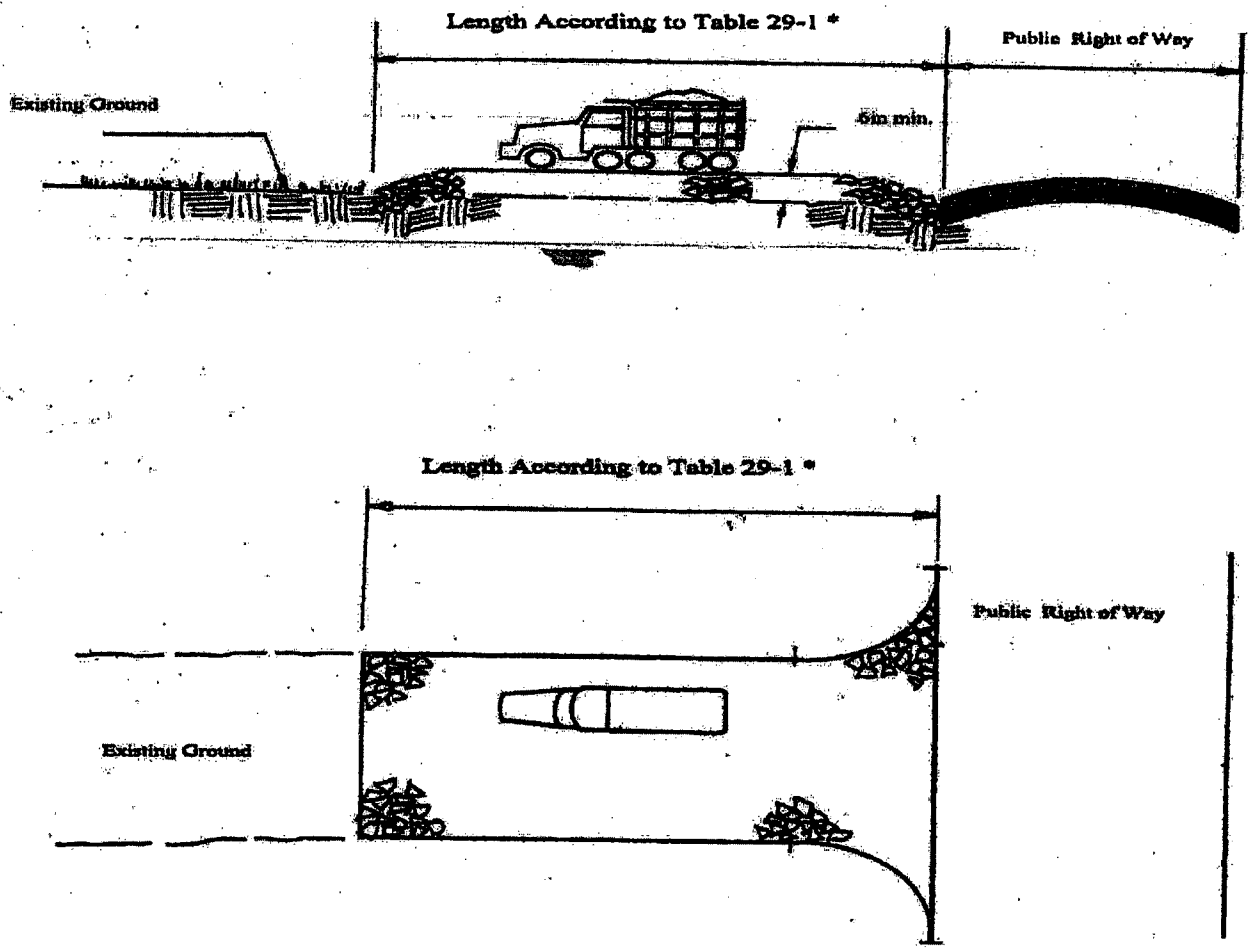

* Note: Individual lot access points may require stabilization
Thickness shown is for stone construction entrance only (typ)

Percent Slope of Roadway	Length of Stone Required	
	Coarse Grained Soils	Fine Grained Soils
0 to 2%	50 ft	100 ft
2 to 5%	100 ft	200 ft
>5%	Entire surface stabilized with FABC base course[1]	

1. As prescribed by local ordinance or other governing authority.

STANDARD FOR SEDIMENT BARRIERS

Definition

A temporary barrier installed across or at the toe of a slope.

Purpose

The purpose of a sediment barrier is to intercept and detain small amounts of sediment from unprotected areas of limited extent.

Conditions Where Practice Applies

The sediment barrier is used where:

1. No other practice is feasible,
2. There is no concentration of water in a channel or other drainageway above the barrier, and
3. Erosion would occur in the form of sheet and rill erosion.

Design Criteria

A. All types of sediment barriers:

   1. Contributing drainage area is less than 1 acre and the length of slope above the barrier is less than 150 feet.
   2. The slope of the contributing drainage area for at least 30 feet adjacent to the barrier shall not exceed 5%.
   3. The barrier shall be constructed so water cannot bypass the barrier around the ends.
   4. Inspection shall be frequent and repair or replacement shall be made promptly as needed.
   5. The barrier shall be removed when the contributing drainage area has been stabilized so as not to block or impede storm flow or drainage.

B. Requirements for bale barrier (e.g., straw, hay, or other acceptable vegetative material):

   1. All bales shall be securely tied and staked on the contour (Fig. 25-1).
   2. Bales shall be placed in a row with ends tightly abutting the adjacent bales.
   3. Each bale shall be embedded in the soil a minimum of 4 inches.
   4. Bales shall be securely anchored in place by two stakes or re-bars driven through each bale. The first stake in each bale shall be driven toward previously laid bale to force bales together.

C. Requirements for silt fence:

1. Fence posts shall be spaced 8 feet center-to-center or closer. They shall extend at least 2 feet into the ground and extend at least 2 feet above ground (Fig. 25-2). Posts shall be constructed of hardwood with a minimum diameter thickness of 1 ½ inches.

2. A metal fence with 6 inch or smaller openings and at least 2 feet high may be utilized, fastened to the fence posts, to provide reinforcement and support to the geotextile fabric where space for other practices is limited and heavy sediment loading is expected.

3. A geotextile fabric, recommended for such use by the manufacturer, shall be buried at least 6 inches deep in the ground. The fabric shall extend at least 2 feet above the ground. The fabric must be securely fastened to the posts using a system consisting of metal fasteners (nails or staples) and a high strength reinforcement material (nylon webbing, grommets, washers etc.) placed between the fastener and the geotextile fabric. The fastening system shall resist tearing away from the post. The fabric shall incorporate a drawstring in the top portion of the fence for added strength.

D. Requirements for stone barrier:

1. The stone shall be piled to a natural angle of repose with a height of at least 2 feet.

2. The stone shall meet ASTM C-33 size No. 2 (2.5 to 1.5) or 3 (2 to 1 inch).

Maintenance

1. Sediment shall be removed from the upstream face of the barrier when it has reached a depth of ½ the barrier height.

2. Repair or replace barrier (fabric, posts, bales etc.) when damaged.

3. Barriers shall be inspected daily for signs of deterioration and sediment removal.

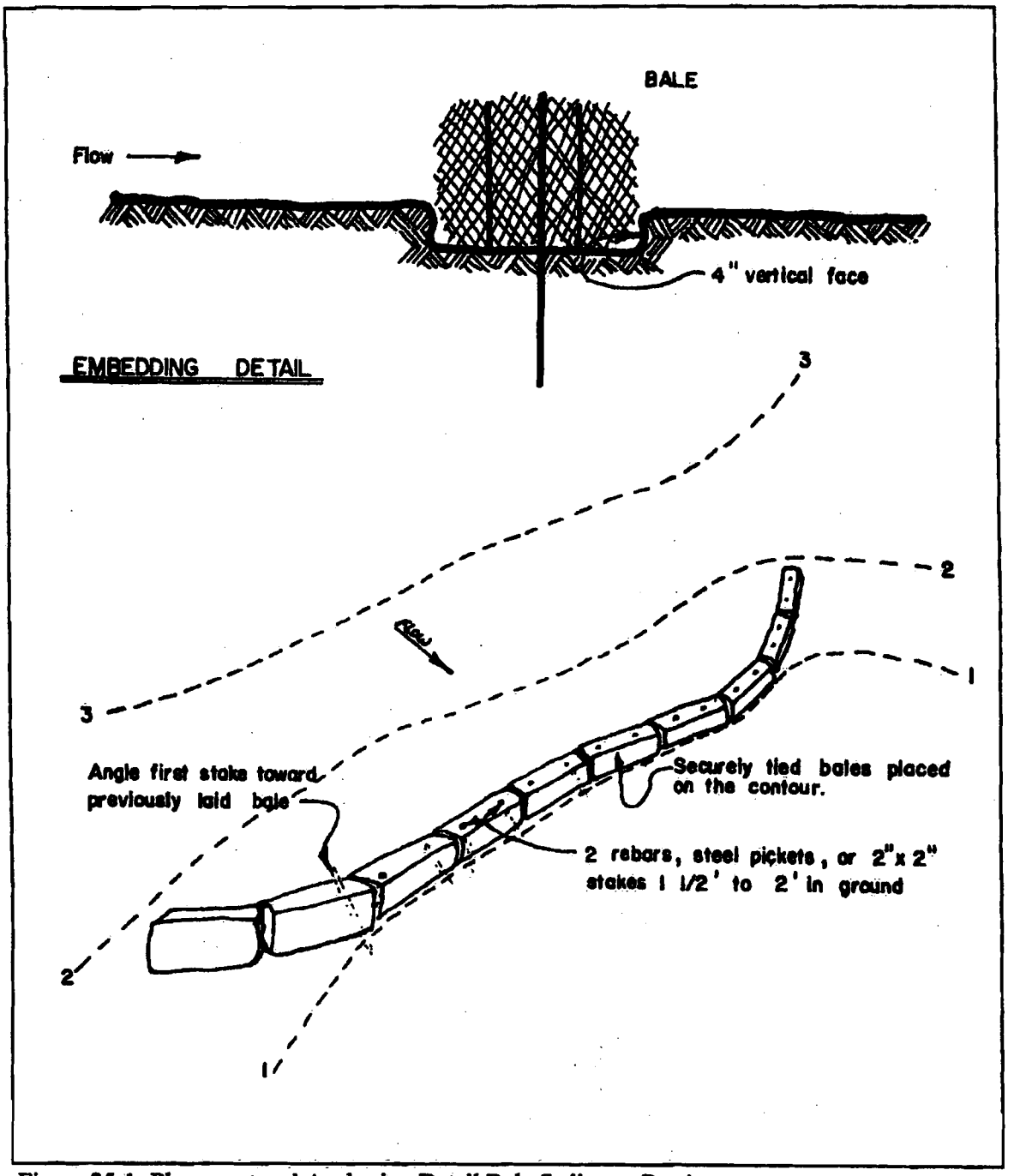

Figure 25-1 Placement and Anchoring Detail Bale Sediment Barriers

Figure 25-2 Silt Fence construction and installation detail

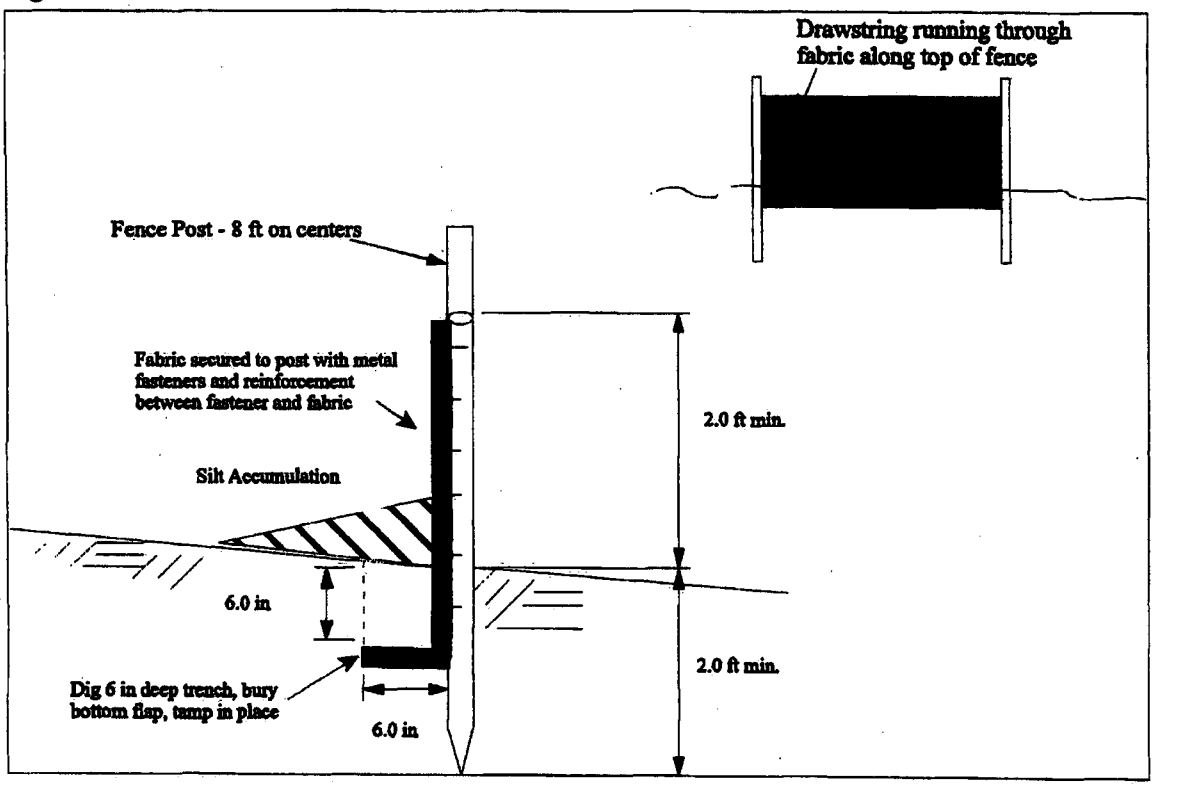

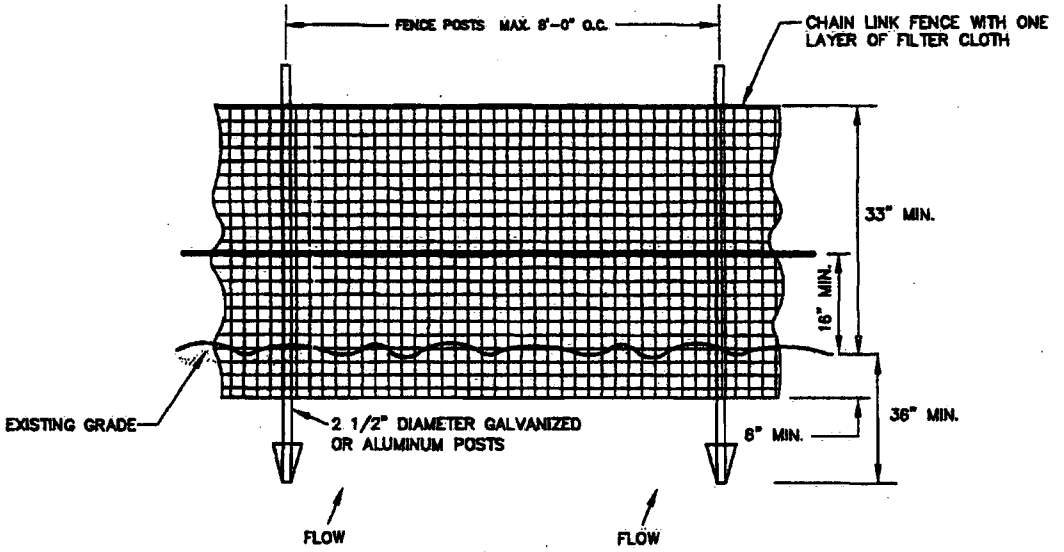

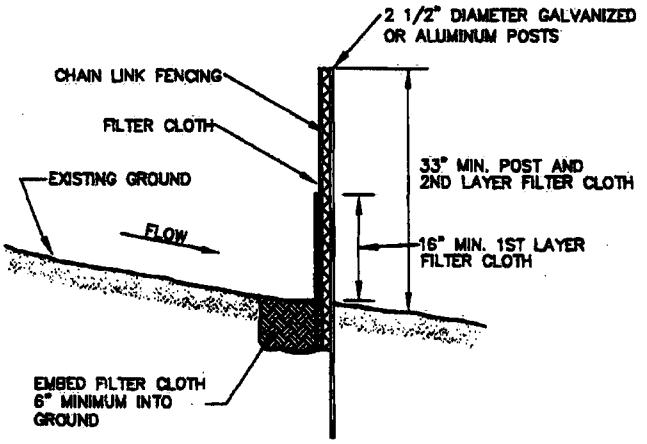

SUPER SILT FENCE

NOT TO SCALE

Silt Fence Detail

Figure 25-2 Silt Fence construction and installation detail

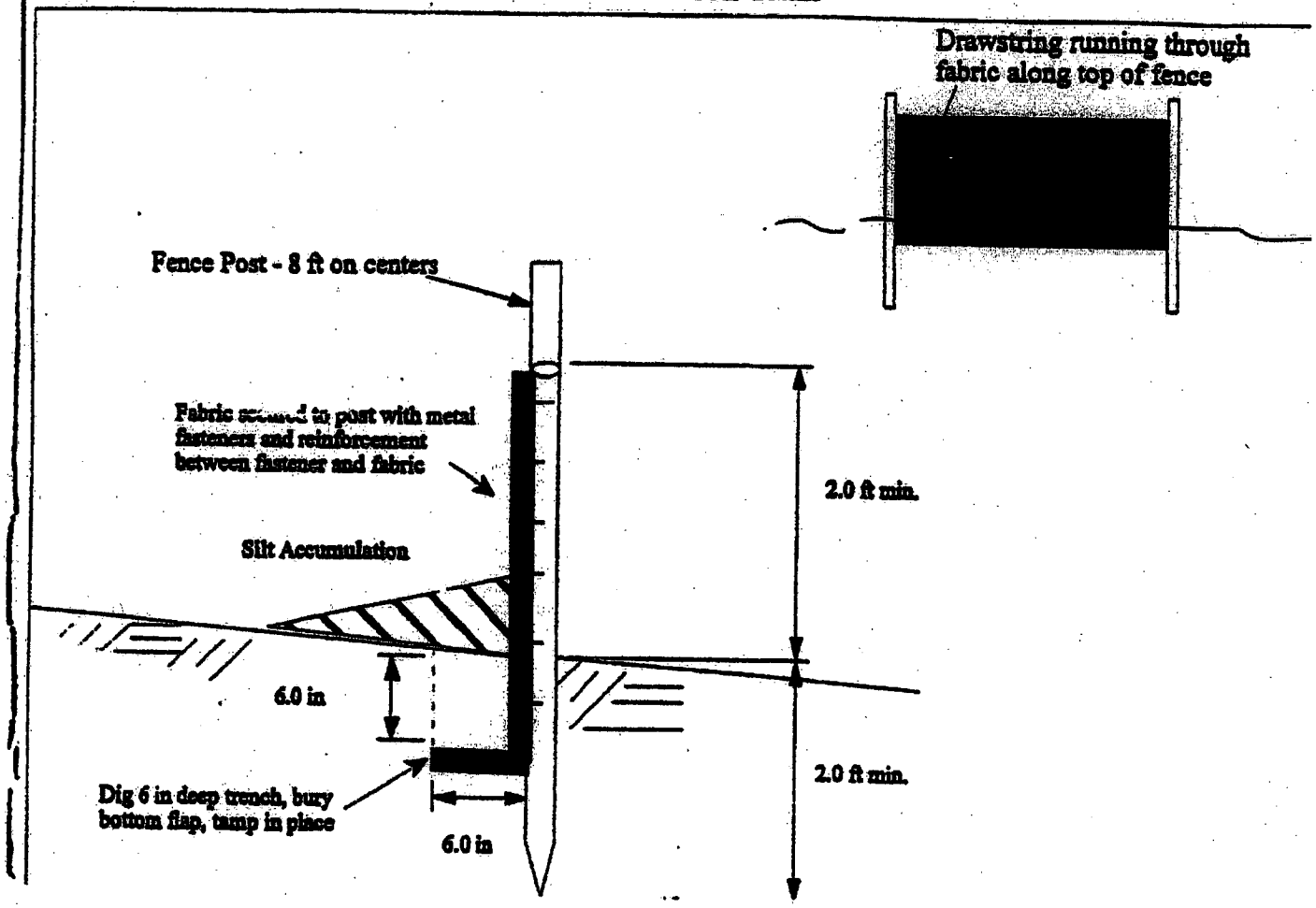

Requirements for Silt Fence:

1. Fence posts shall be spaced 8 feet center-to-center or closer. They shall extend at least 2 feet into the ground and extend at least 2 feet above ground (Fig. 25-2). Posts shall be constructed of hardwood with a minimum diameter thickness of 1 ½ inches.

2. A metal fence with 6 inch or smaller openings and at least 2 feet high may be utilized, fastened to the fence posts, to provide reinforcement and support to the geotextile fabric where space for other practices is limited and heavy sediment loading is expected.

3. A geotextile fabric, recommended for such use by the manufacturer, shall be buried at least 6 inches deep in the ground. The fabric shall extend at least 2 feet above the ground. The fabric must be securely fastened to the posts using a system consisting of metal fasteners (nails or staples) and a high strength reinforcement material (nylon webbing, grommets, washers etc.) placed between the fastener and the geotextile fabric. The fastening system shall resist tearing away from the post. The fabric shall incorporate a drawstring in the top portion of the fence for added strength.

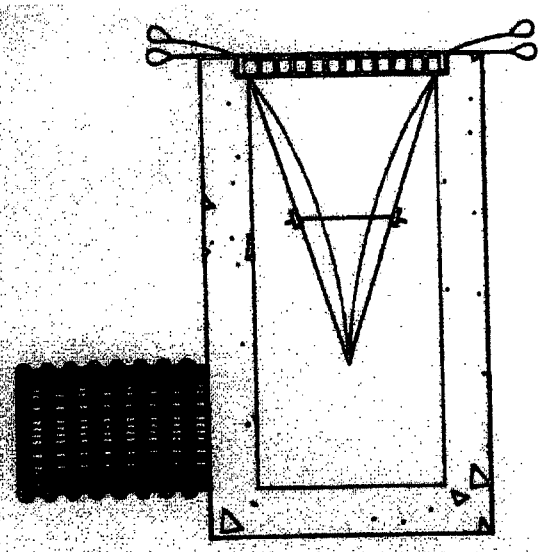

INSTALLATION DETAIL

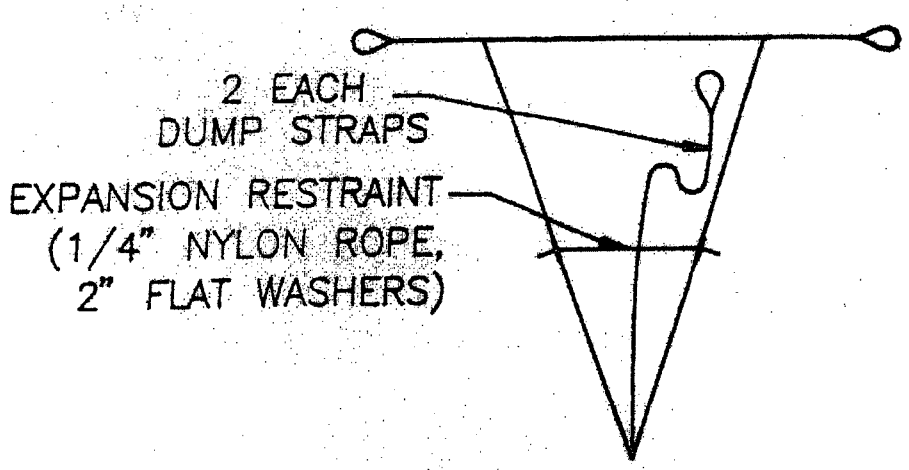

BAG DETAIL

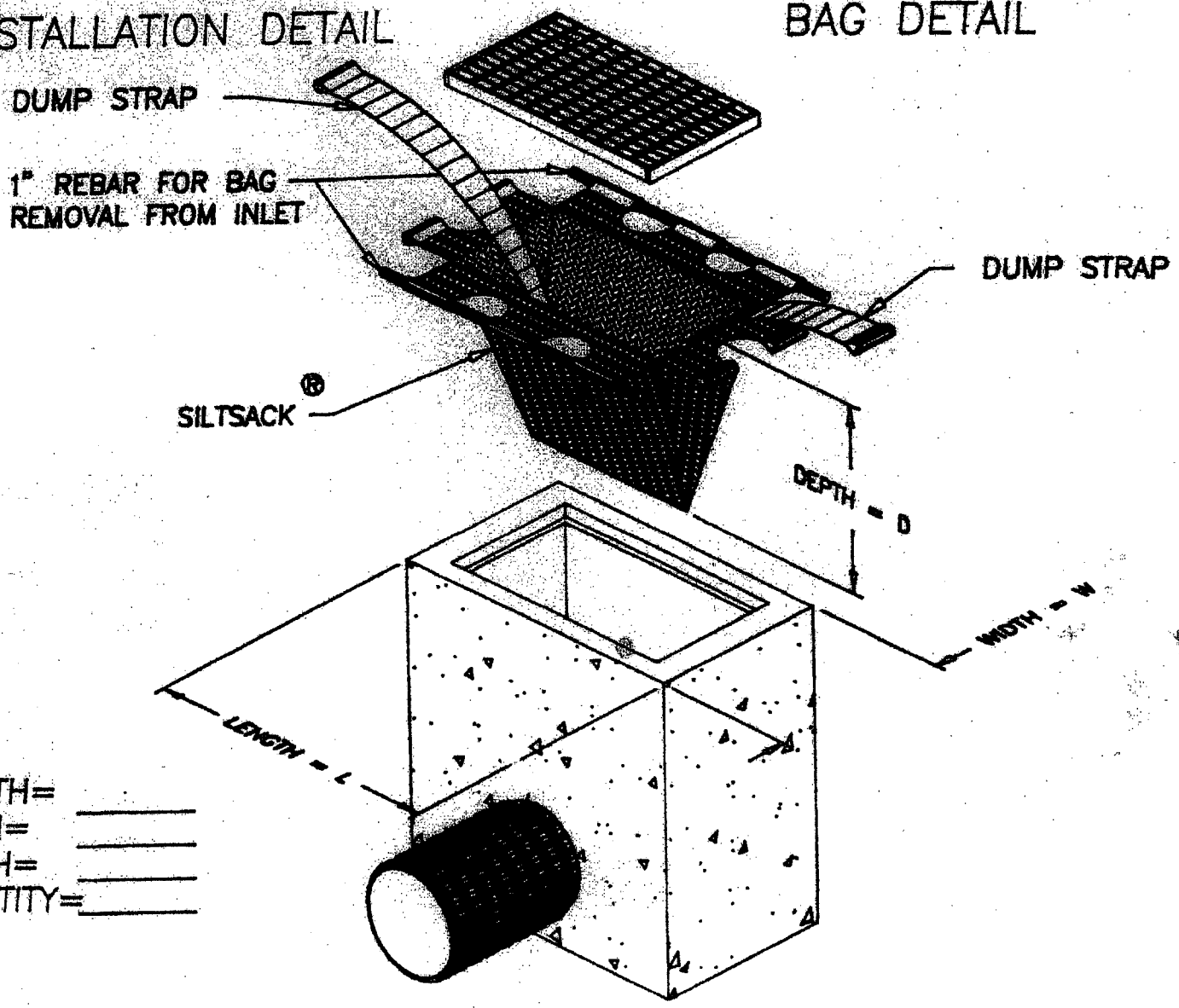

LENGTH= _____
WIDTH= _____
DEPTH= _____
QUANTITY= _____

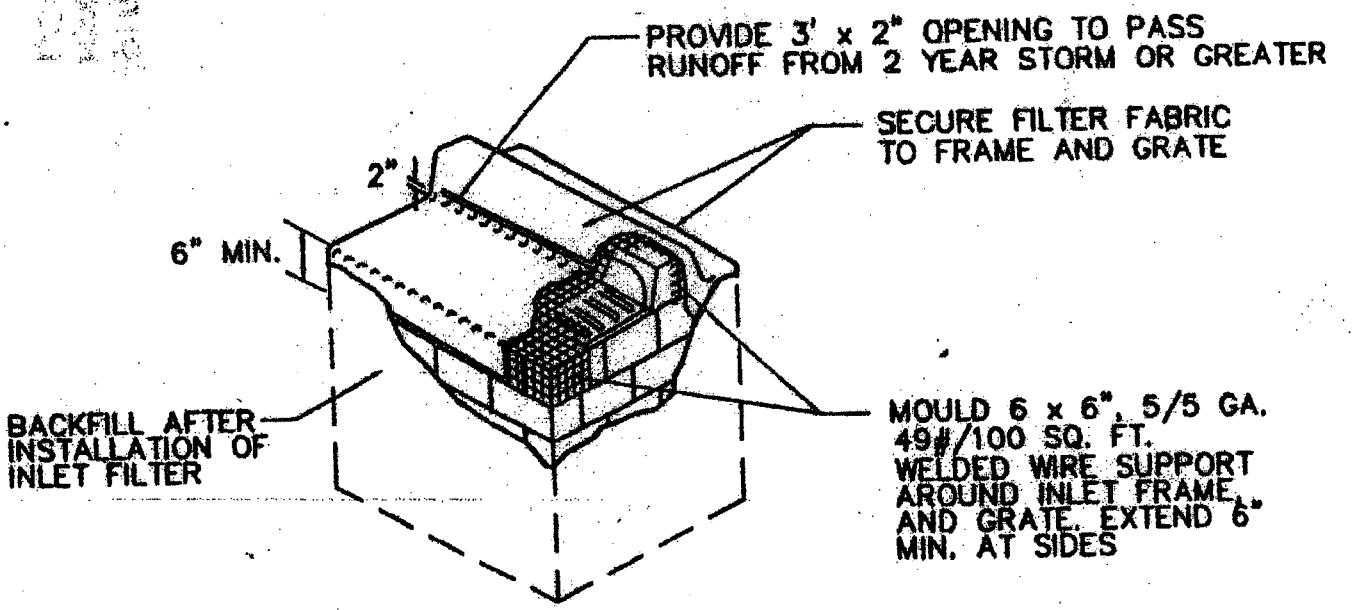

1. CONTRACTOR IS TO CLEAN INLET FILTER AFTER EVERY STORM
2. IF BOTTOM OF ROADWAY BOX IS BELOW TOP OF GRATE, CONSTRUCT OPENINGS IN INLET WALL TO ALLOW WATER TO FLOW IN, COVER OPENINGS WITH WELDED WIRE SUPPORT AND FILTER FABRIC
3. INSPECTION SHALL BE FREQUENT. MAINTENANCE, REPAIR AND REPLACEMENT SHALL BE MADE PROMPTLY, AS NEEDED. THE BARRIER SHALL BE REMOVED WHEN THE AREA DRAINING TOWARDS THE INLET HAS BEEN STABILIZED.

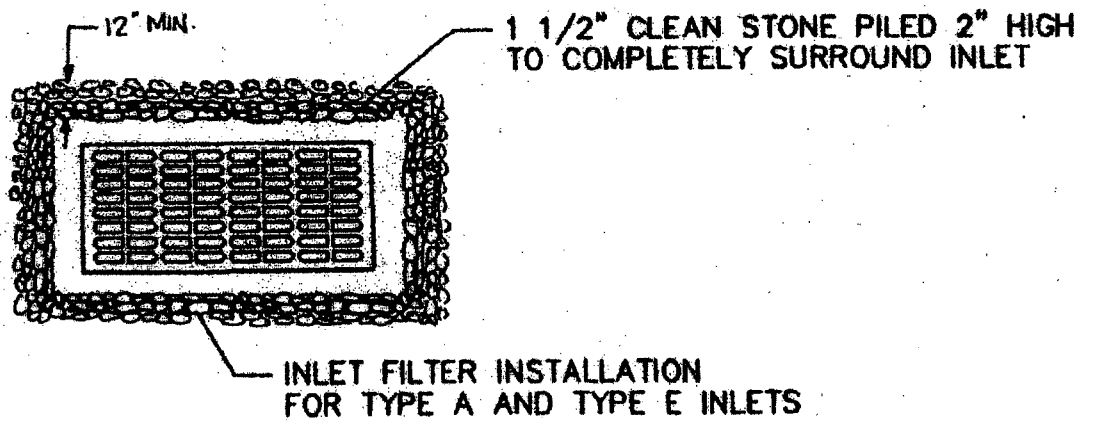

NOTE: TWO TRAFFIC CONES TO BE PLACED ON EACH SIDE OF INLET

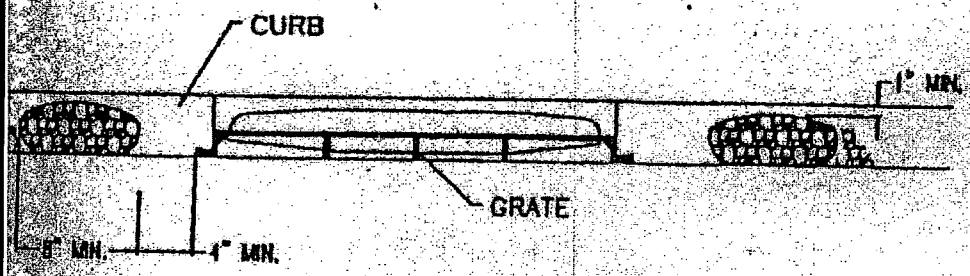

SECTION A–A

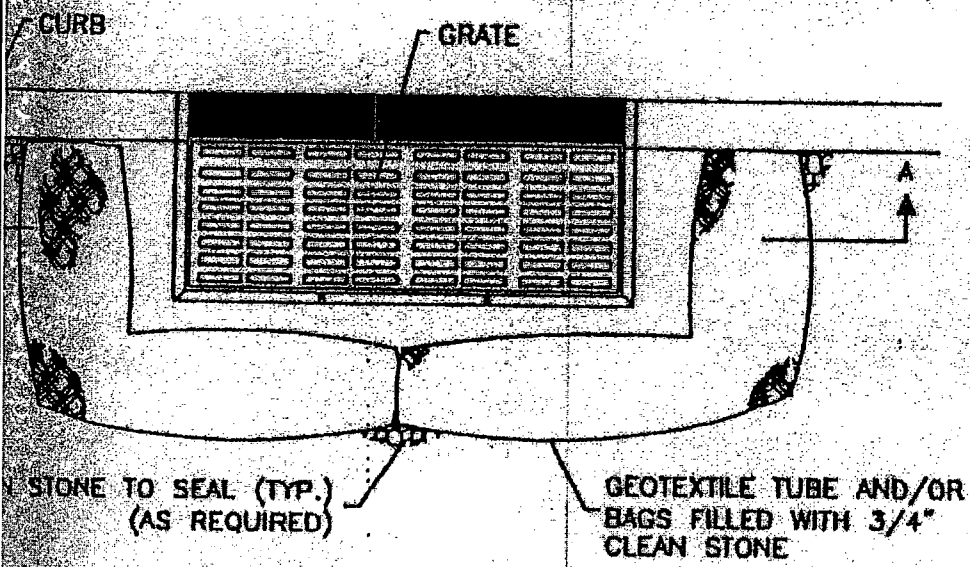

PLAN VIEW

NOTES:

1. GEOTEXTILE TO BE WOVEN POLYPROPYLENE PRODUCT 117F, BY SYNTHETIC INDUSTRIES INC., OR TERRATEX SC, BY WEBTEC INC., OR APPROVED EQUAL.
2. 3/4" CLEAN STONE CORE SHALL BE COMPLETELY CONTAINED WITHIN GEOTEXTILE. SEAMS SHALL BE SEWN OR CLOSED BY SUITABLE MECHANICAL MEANS TO PREVENT LEAKAGE OF STONE.
3. WHERE NO CURB IS PRESENT, BARRIER SHALL COMPLETELY ENCIRCLE THE DRAIN INLET.
4. INLET GRATE OPENING IS TO BE KEPT CLEAR OF OBSTRUCTIONS AT ALL TIMES.
5. THE PROTECTION DEVICE WILL BE DESIGNED TO CAPTURE OR FILTER RUNOFF FROM THE 1 YEAR, 24 HOUR STORM EVENT AND SHALL SAFELY CONVEY HIGHER FLOWS DIRECTLY INTO THE STORM SEWER SYSTEM. WHERE SLOPE REQUIRES, AN EARTHEN BERM SHALL BE INSTALLED TO DIRECT STORM FLOW INTO THE INLET, BUT NOT OVER THE CURB.
6. OTHER METHODS THAT ACCOMPLISH THE PURPOSE OF STORM SEWER INLET PROTECTION MAY BE USED IF APPROVED BY THE SOIL CONSERVATION DISTRICT.
7. INSPECTIONS SHALL BE FREQUENT. MAINTENANCE, REPAIR, AND REPLACEMENT SHALL BE MADE PROMPTLY, AS NEEDED. THE BARRIER SHALL BE REMOVED WHEN THE AREA DRAINING TOWARDS THE INLET HAS BEEN STABILIZED.

INLET FILTER DETAIL

NOT TO SCALE

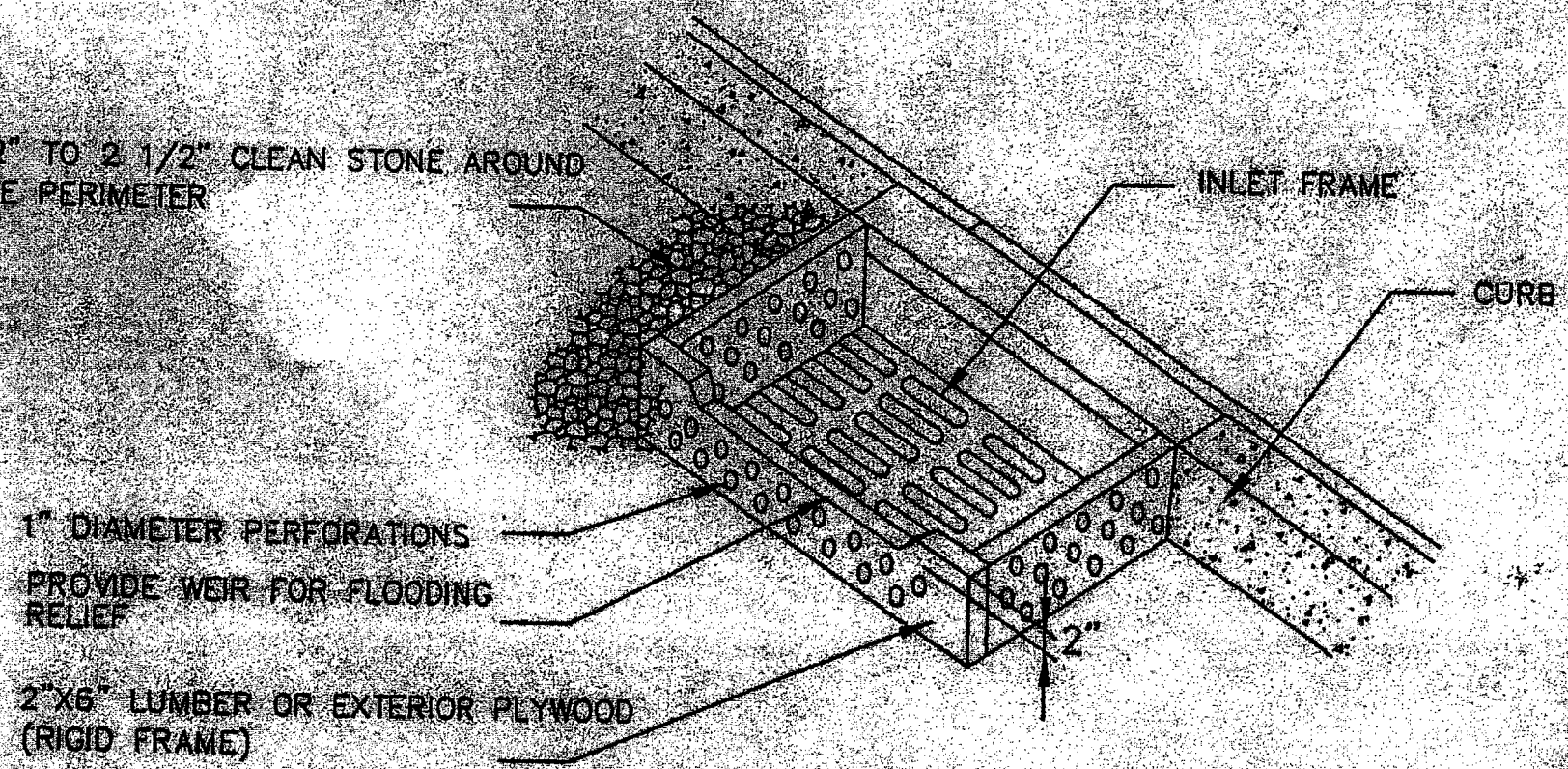

NOTE
SILT TO BE REMOVED FROM AROUND INLET PERIODICALLY THROUGHOUT CONSTRUCTION

TYPE "B" INLET FILTER DETAIL

NOT TO SCALE

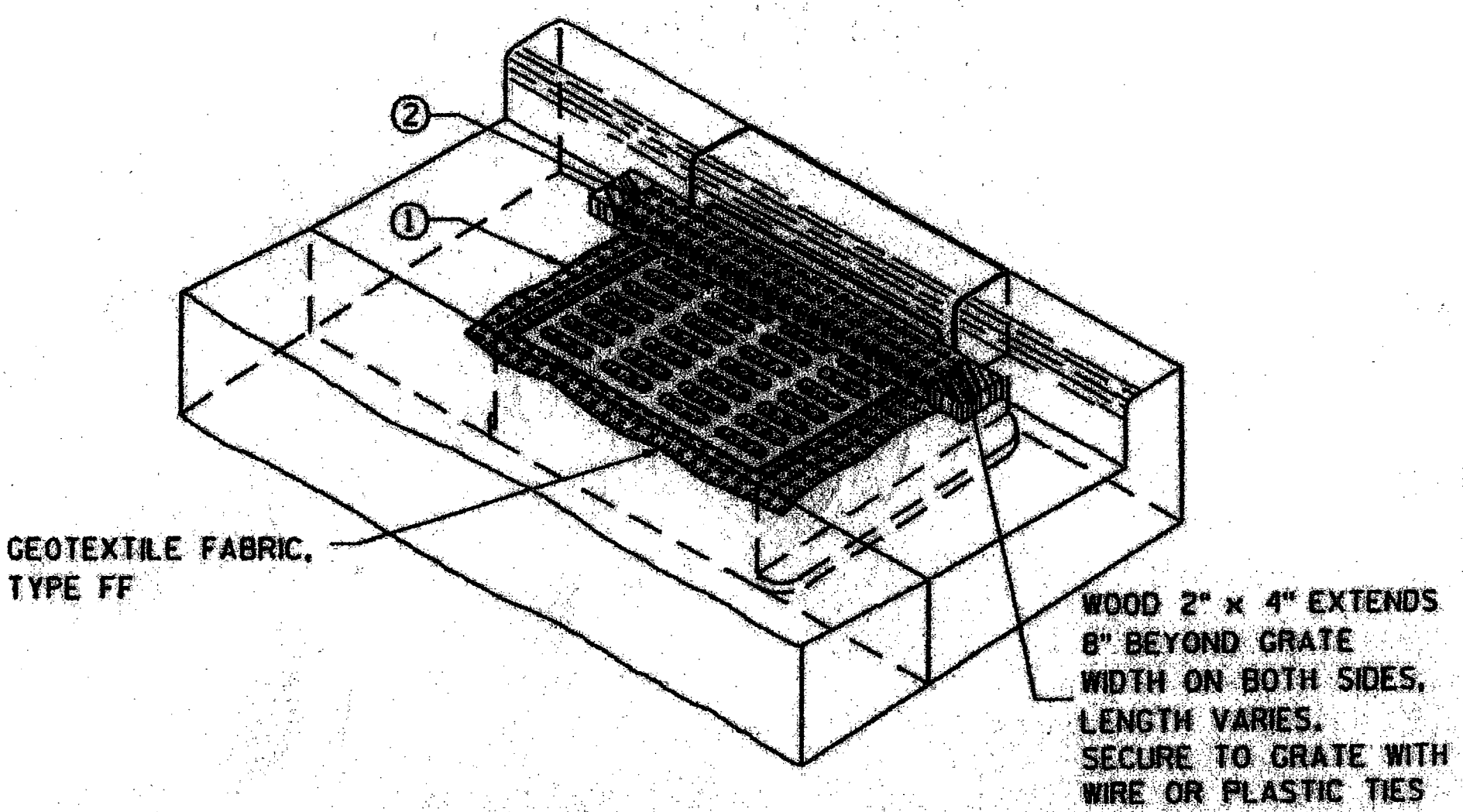

INLET PROTECTION, TYPE C (WITH CURB BOX)

PLAN

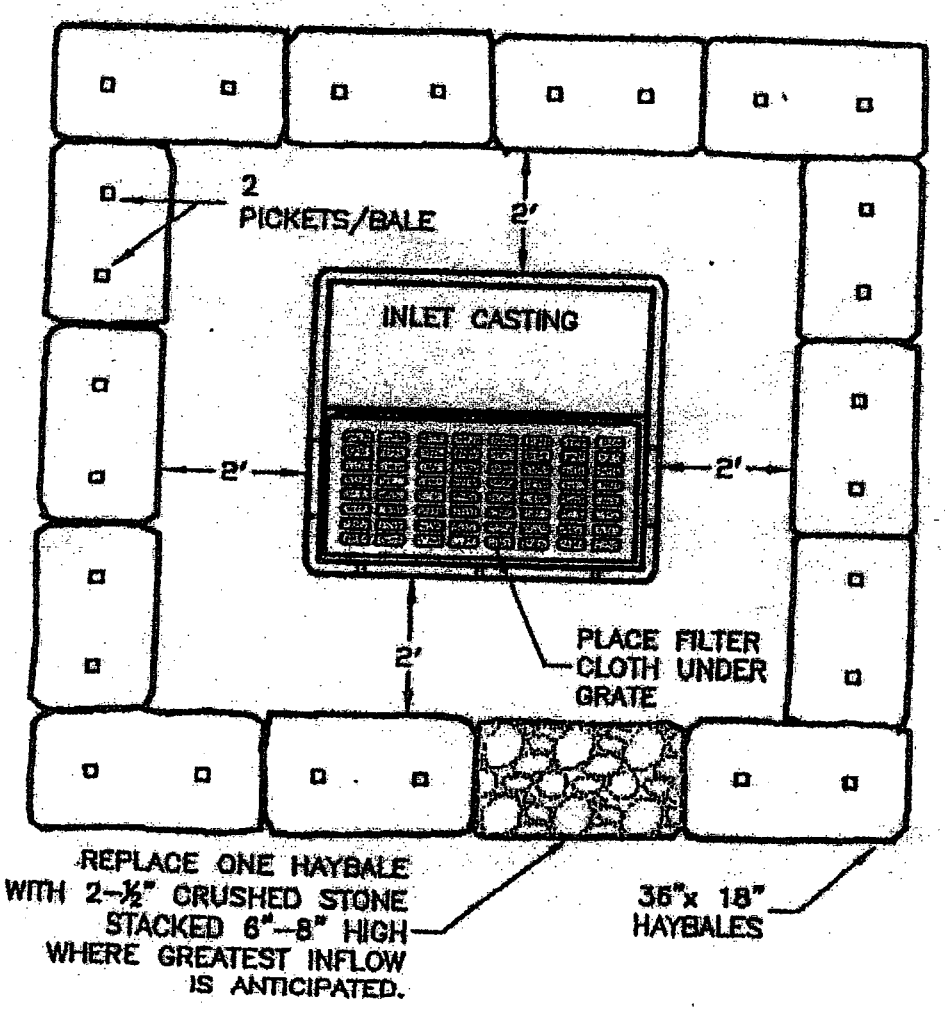

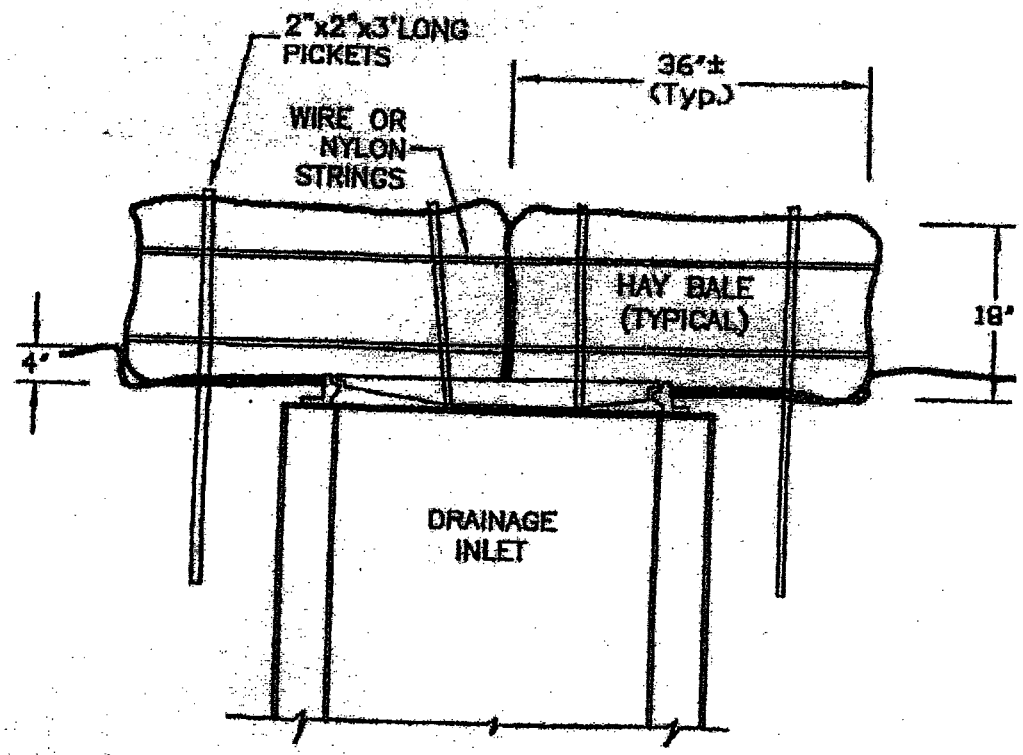

SECTION

NOTES:

1. PLACE BALES IN RING AROUND INLET TO FILTER SEDIMENT FROM STORM WATER. RING BARRIER TO REMAIN IN PLACE UNTIL SITE IS STABILIZED OR PAVEMENT IS INSTALLED.
2. ALL BALES SHALL BE EITHER WIRE BOUND OR NYLON STRING TIED.
3. ALL BALES SHALL BE PLACED TIGHTLY ABUTTING ADJACENT BALES.
4. EACH BALE SHALL BE EMBEDDED 4" IN THE GROUND. BALES SHALL BE ANCHORED WITH 2"x 2"x 3' STAKES DRIVEN THROUGH THE BALES A MINIMUM OF 18" INTO THE GROUND. THE FIRST STAKE IN EACH BALE SHALL BE DRIVEN TOWARD THE PLACED BALE TO FORCE BALES TOGETHER.
5. HAYBALES FOR USE ON UNPAVED SURFACES ONLY.
6. INLET MUST SAFELY PASS FLOWS GREATER THAN A 1-YR., 24-HR. STORM EVENT.

HAY BALE FILTER DETAIL

UNPAVED SURFACES ONLY

NOT TO SCALE

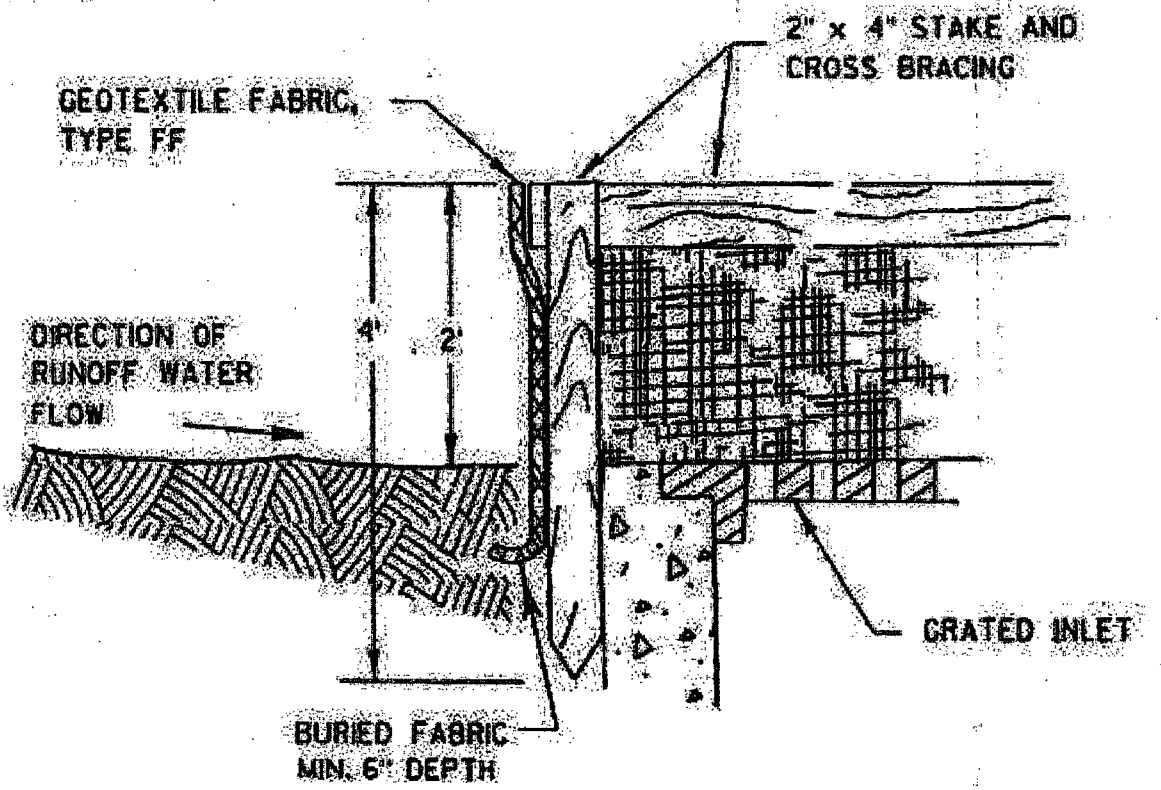

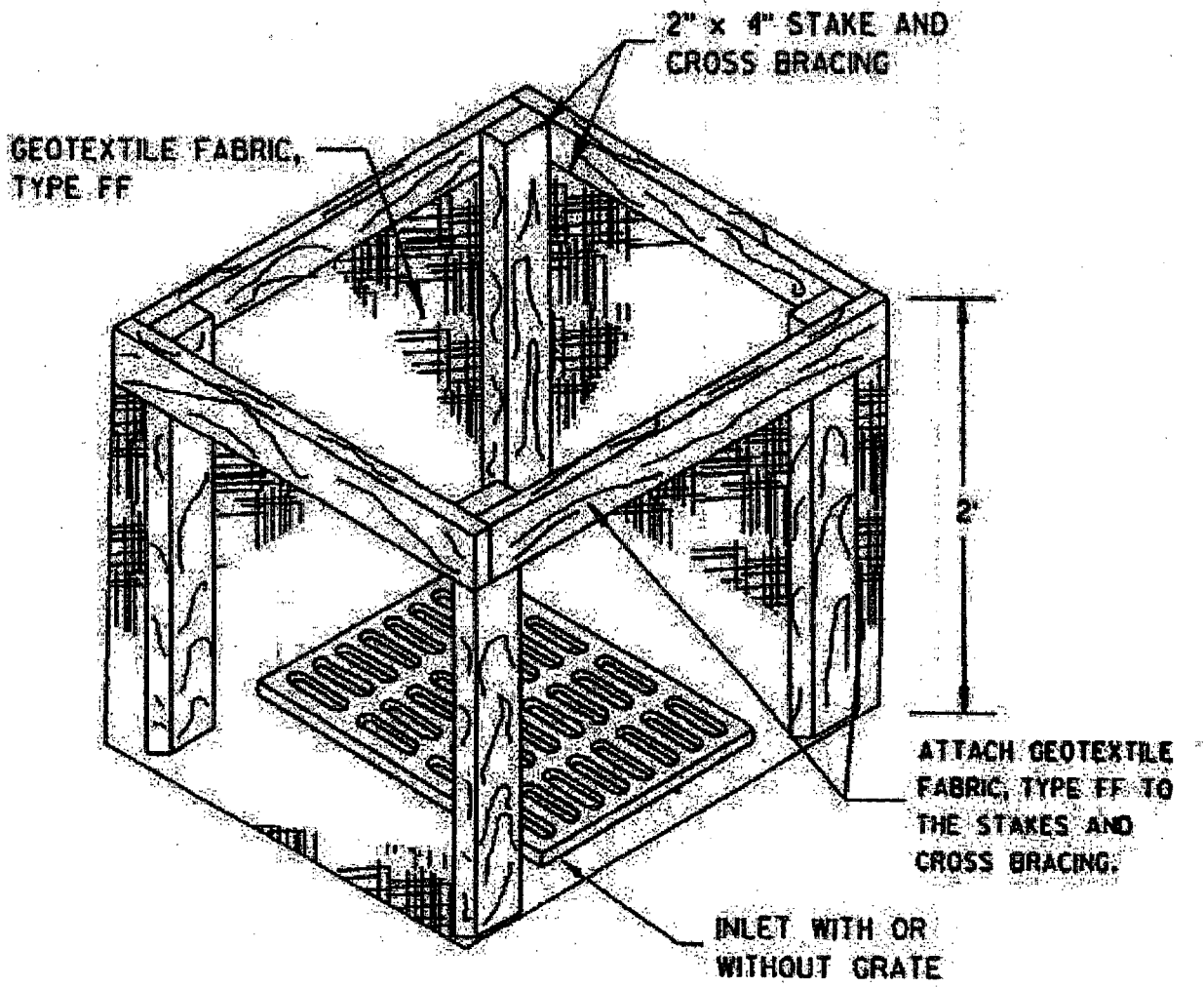

INLET PROTECTION, TYPE A

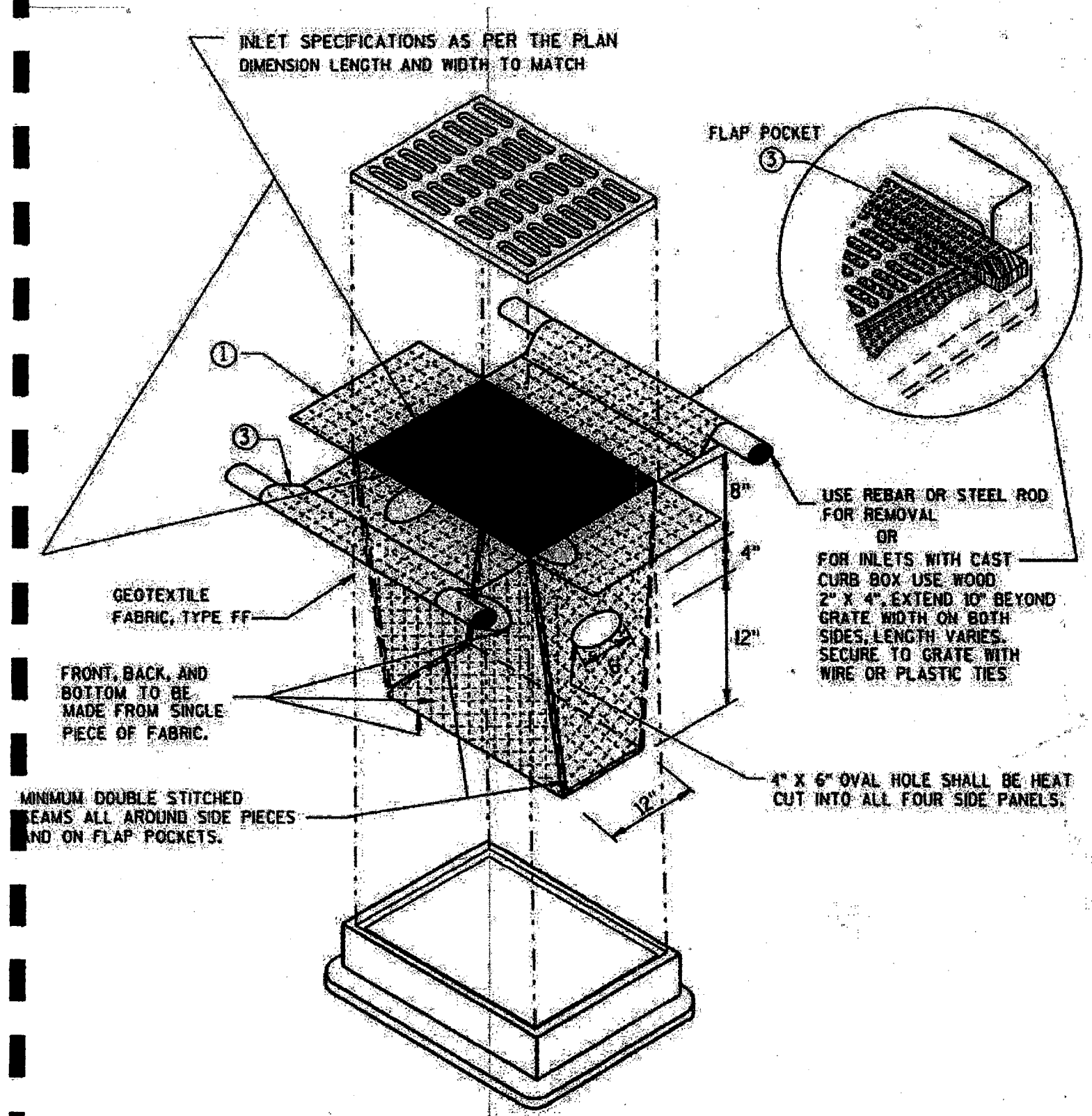

INLET PROTECTION, TYPE D

(CAN BE INSTALLED IN ANY INLET TYPE WITH
OR WITHOUT A CURB BOX AS PER NOTE 2)

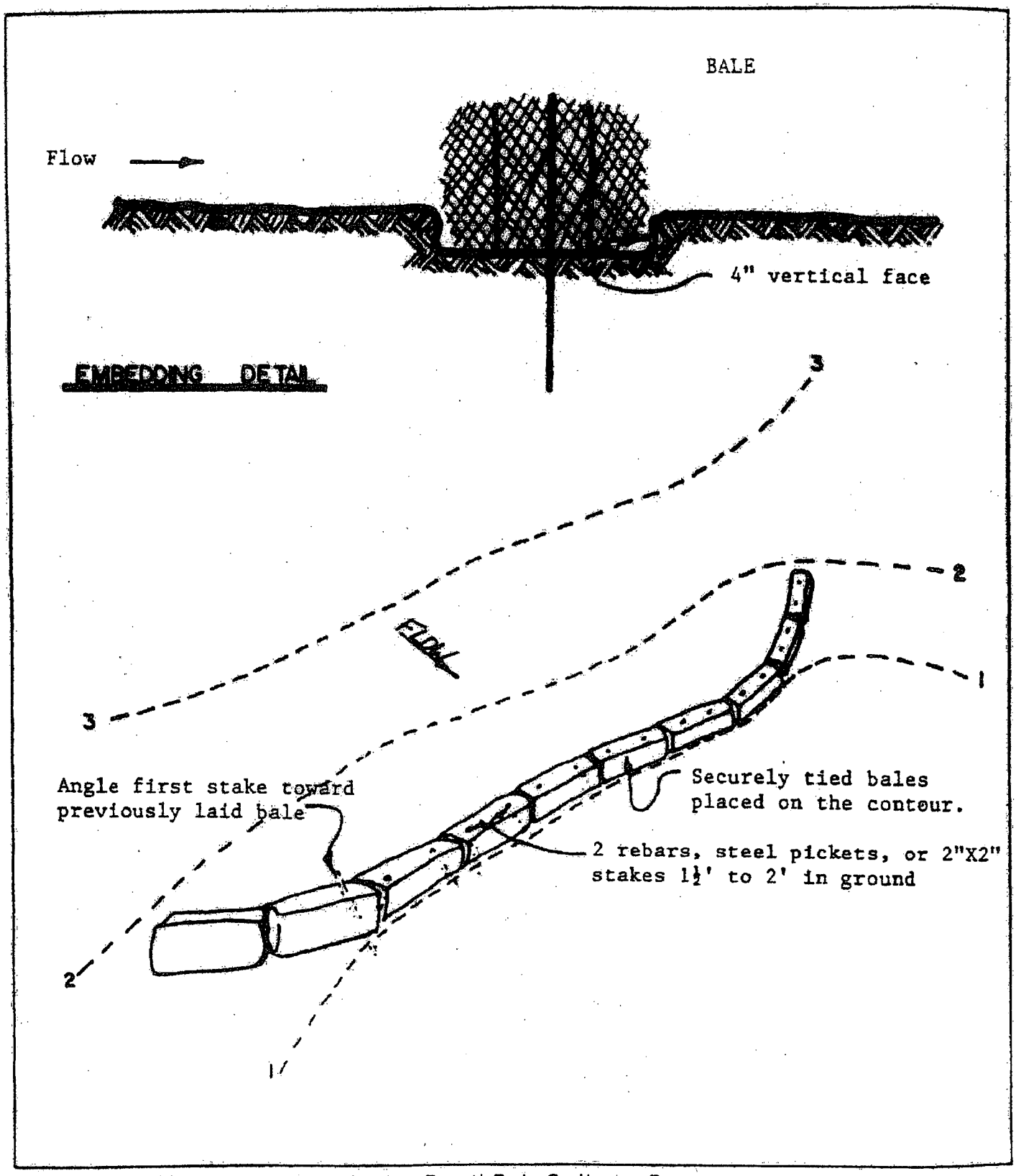

Figure 25-1 Placement and Anchoring Detail Bale Sediment Barriers

Dust Control Notes

The following methods should be considered for controlling dust:

Mulches - See Standard for Stabilization with Mulches Only (pg. 5-1)

Vegetative Cover - See Standard for Temporary Vegetative Cover (pg. 7-1), Permanent Vegetative Cover for Soil Stabilization (pg. 4-1), and Permanent Stabilization with Sod (pg. 6-1)

Spray-On Adhesives - On mineral soils (not effective on muck soils). Keep traffic off these areas.

Table 16-1: Dust Control Materials

MATERIAL	WATER DILUTION	TYPE OF NOZZLE	APPLY GALLONS/ACRE
Anionic asphalt emulsion	7:1	Coarse Spray	1200
Latex emulsion	12.5:1	Fine Spray	235
Resin in water	4:1	Fine Spray	300
Polyacrylamide (PAM) - spray on Polyacrylamide (PAM) - dry spray	Apply according to manufacturer's instructions. May also be used as an additive to sediment basins to flocculate and precipitate suspended colloids. See Sediment Basin standard (pg. 26-1)		
Acidulated Soy Bean Soap Stick	None	Coarse Spray	1200

Tillage - To roughen surface and bring clods to the surface. This is a temporary emergency measure which should be used before soil blowing starts. Begin plowing on windward side of site. Chisel-type plows spaced about 12 inches apart, and spring-toothed harrows are examples of equipment which may produce the desired effect.

Sprinkling - Site is sprinkled until the surface is wet.

Barriers - Solid board fences, snow fences, burlap fences, crate walls, bales of hay, and similar material can be used to control air currents and soil blowing.

Calcium Chloride - Shall be in the form of loose, dry granulates of flakes fine enough to feed through commonly used spreaders at a rate that will keep surface moist but not cause pollution or plant damage. If used on steeper slopes, then use other practices to prevent washing into streams, or accumulation around plants.

Stone - Cover surface with crushed stone or coarse gravel.

TREE PROTECTION

Removal of Tree Limb

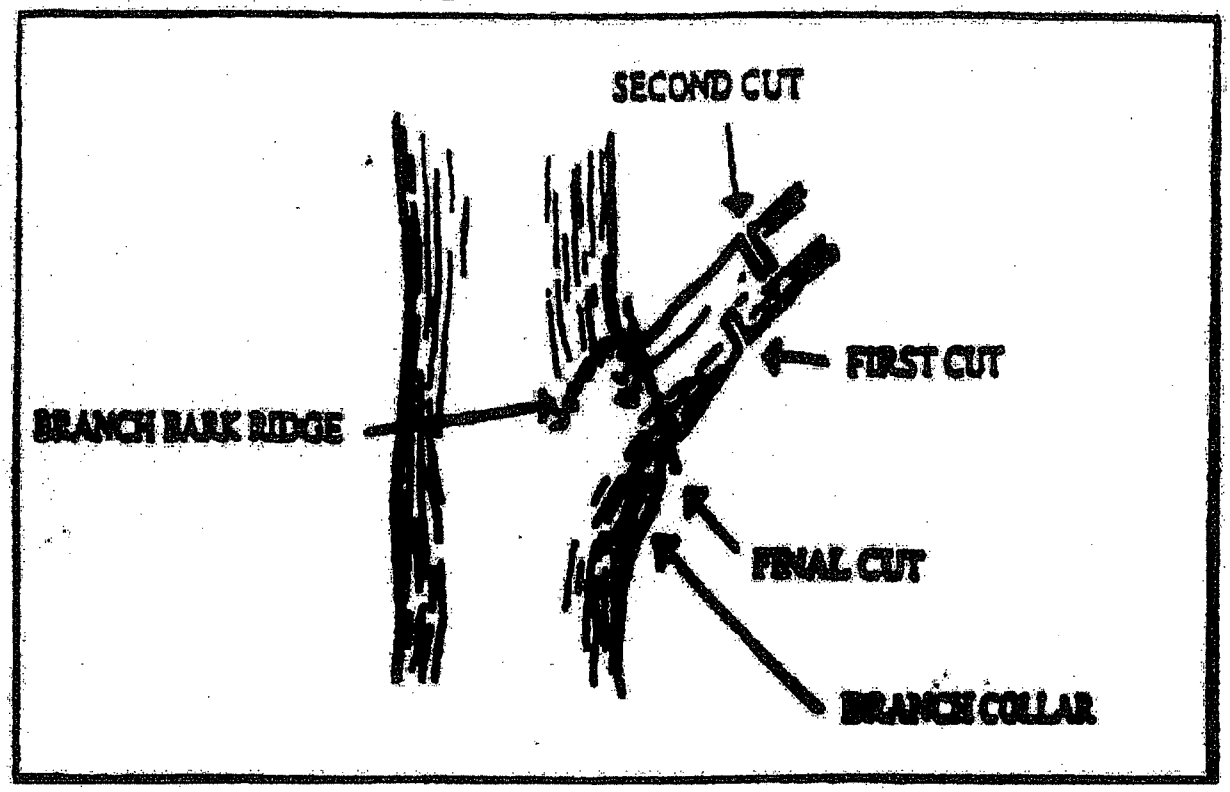

Correct fencing for tree protection

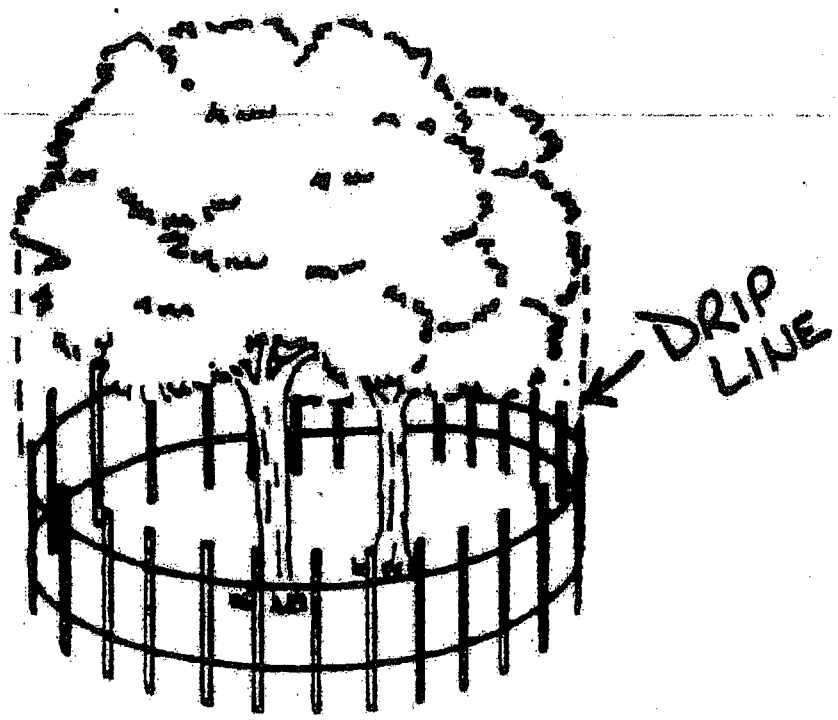

DAYCO CORPORATION / L.E. CARPENTER & COMPANY SUPERFUND SITE

BOROUGH OF WHARTON, MORRIS COUNTY, NEW JERSEY
MW19HS1 SOIL REMEDIATION
SOIL EROSION AND SEDIMENT CONTROL PLAN

PREPARED FOR: L.E. CARPENTER & COMPANY

PREPARED BY: RMT, INC. DATE: DECEMBER 2009

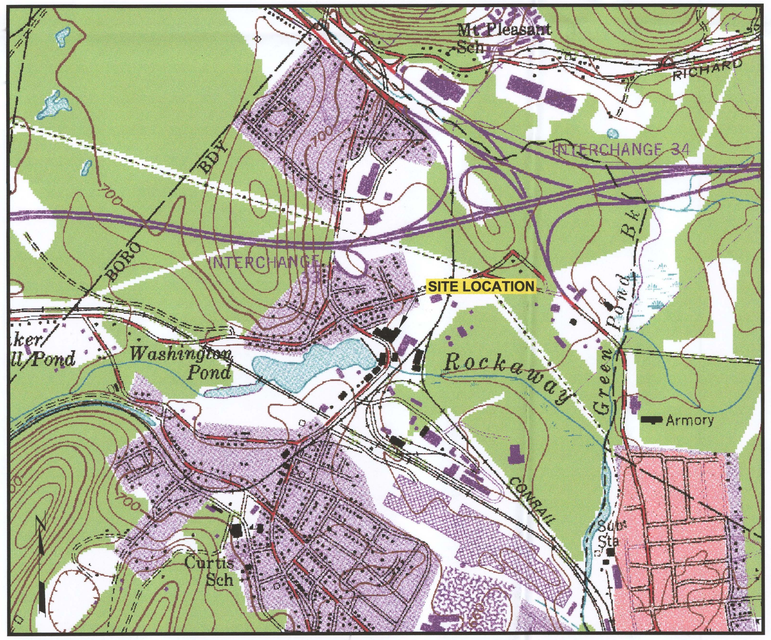

SITE LOCATION MAP

0 1000' 2000' 3000' 4000'
SCALE IN FEET

BASE MAP DEVELOPED FROM THE DOVER, NEW JERSEY 7.5 MINUTE U.S.G.S. TOPOGRAPHIC QUADRANGLE MAP, DATED 1954, PHOTOREVISED 1981.

DRAWING INDEX

FIGURE N0.	SHEET TITLE
F1	TITLE SHEET / DRAWING INDEX
F2	SITE FEATURES, TOPOGRAPHY AND SURFICIAL DRAINAGE PATTERNS
F3	FLOODPLAIN, FLOODWAY, AND WETLAND MAP
F4	USDA SOIL TYPES
F5	MW19HS1 CONSTRUCTION SITE LAYOUT
F6	FINAL GRADE AND END USE PLAN
F7	MW19HS1 CONSTRUCTION DETAILS

DESIGNED BY: N.J.C.	DRAWN BY: S.J.L.	CHECKED BY: D.E.O.	TITLE SHEET / DRAWING INDEX
APPROVED BY: D.E.O.		REVISIONS NO. / DATE	
DANIEL E. OMAN			DAYCO CORPORATION / L.E. CARPENTER & COMPANY MW19HS1 SOIL REMEDIATION SOIL EROSION AND SEDIMENT CONTROL PLAN WHARTON NEW JERSEY
12/15/09			RMT, INC. 3754 RANCHERO DRIVE ANN ARBOR MICHIGAN 48108
N.J. PROFESSIONAL ENGINEER NO. 24GE04115700	SCALE: SHOWN	DATE: December 15, 2009	DRAWING NO.: 6527.37.16.F1.dwg SHEET NO.: F1 of F7

Drawing Name: J:\06527\376527-37-16-F1.dwg Dwg Size: 0.15 Mb Layout: Title Sheet (F1)
Operator Name: LUCIDO, SAM Plot Date: December 14, 2009
Drawing Plot Scale: 1:1 Plot Time: 3:30 PM

RMT COMPUTER AIDED DESIGN AND DRAFTING

LEGEND

- RUNOFF FLOW DIRECTION
- APPROXIMATE PROPERTY LINE
- PROPOSED LIMITS OF WORK
- REGULATED WETLAND
- STATE OPEN WATER

MAP SOURCE

1. BASE MAP DEVELOPED FROM TOPOGRAPHIC SURVEY PROVIDED BY JAMES M.STEWART, INC. LAND SURVEYORS, DRAWING NO 2793-03.DWG, DATED APRIL 2007.
2. AERIAL PHOTOGRAPH PROVIDED BY JAMES M. STEWART, INC. LAND SURVEYORS, DATED APRIL 2007.

N

0 40' 80' 120' 160'

SCALE IN FEET

NO.	BY	DATE	REVISION	APP'D.
5.				
4.				
3.				
2.				
1.				

DAYCO CORPORATION / L.E. CARPENTER & COMPANY
SUPERFUND SITE
WHARTON, NEW JERSEY

SITE FEATURES, TOPOGRAPHY AND SURFICIAL DRAINAGE PATTERNS

DRAWN BY: SJL	DRAWING SCALE:	PROJECT NO.	J:\06527\37
CHECKED BY: DBM	SHOWN	FILE NO.	6527.37.17.F2.dwg
APPROVED BY: NLC	DATE PRINTED:	**FIGURE F2**	
DATE: December 2009			

RMT
3754 Ranchero Drive
Ann Arbor, Michigan 48108-2771
Phone: 734-971-7080
Fax: 734-971-9022

Drawing Name: J:\06527\37\6527.37.17.F2.dwg
Operator Name: LUCIDO, SAM
Drawing Plot Scale: 0.016667
Dwg Size: 0.19 Mb
Plot Date: April 2008
Plot Time: 1:46 PM
Layout: Site Features Watershed (F2)

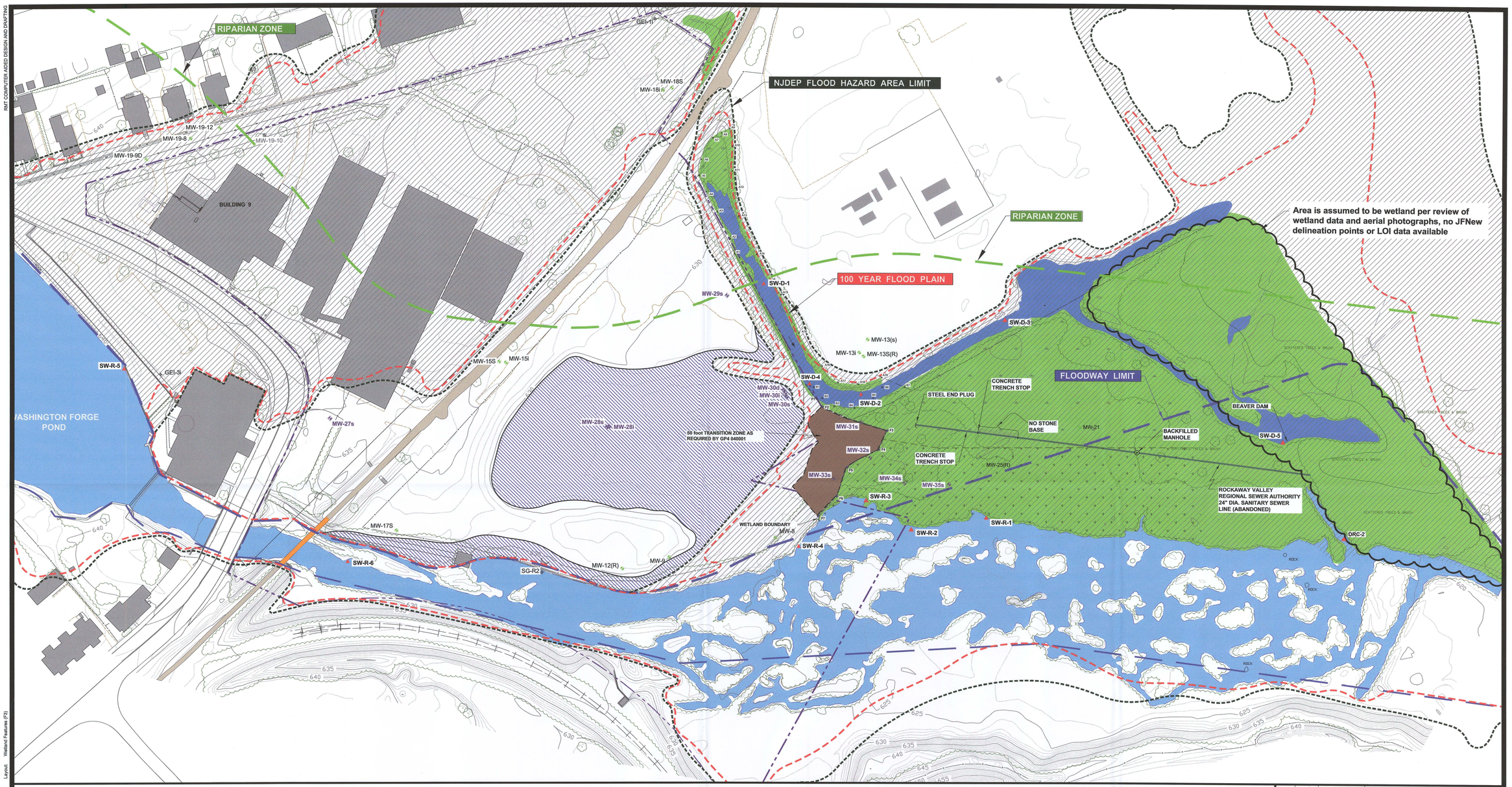

LEGEND

- APPROXIMATE PROPERTY LINE
- FENCE LINE
- TREES
- MW-25(R) — GROUNDWATER ELEVATION MONITORING WELL LOCATION AND NUMBER (s = shallow, i = intermediate, d = deep)
- MW-29s — PRMP MONITORING WELL LOCATION AND NUMBER (s = shallow, i = intermediate, d = deep)
- SG-R1 — RIVER POINT SURFACE WATER ELEVATION
- SG-D1 — DRAINAGE CHANNEL POINT SURFACE WATER ELEVATION
- GEI-2i — PIEZOMETER LOCATION
- SW-R-1 — SURFACE WATER SAMPLING LOCATION (D = DITCH; R = RIVER)
- 630 — POST-REMEDIATION GROUND SURFACE ELEVATIONS CONTOUR INTERVAL = 1 ft.
- RAILS TO TRAILS
- REGULATED WETLAND
- TRANSITION ZONE
- STATE OPEN WATERS
- COVERED FOOT BRIDGE
- (PEM) PALUSTRINE EMERGENT WETLAND
- (PFO/SS) PALUSTRINE FORESTED/ SCRUB-SHRUB
- NJDEP FLOOD HAZARD AREA
- RMT FLOOD HAZARD LIMIT (See Note 3)
- RIPARIAN ZONE (300 ft. FROM EDGE OF REGULATED WATER)
- NJDEP 100 YEAR FLOOD PLAIN
- NJDEP FLOOD HAZARD LIMITS
- NJDEP FLOODWAY LIMITS
- F4 — SURVEYED WETLAND DELINEATION FLAG (JFNEW, MARCH. 2004)
- A19 — LETTERS OF INTERPRETATION, LOI 1439-00-0001.1 FLAG NUMBER (JUNE 2000)
- ABANDONED SEWER LINE

NOTES

1. BASE MAP DEVELOPED FROM TOPOGRAPHIC SURVEY PROVIDED BY JAMES M.STEWART, INC. LAND SURVEYORS, DRAWING NO 2793-03.DWG, DATED 02-14-02 AS REVISED 04-10-07 (DRAWING NO. 314907REV.DWG).
2. WETLAND BOUNDARIES BASED ON JFNEW DELINEATION (SEPT 2004) AND LETTERS OF INTERPRETATION (LOI) (JUNE 14, 2000). 1439-00-0001.1 REFERENCES THE NEW JERSEY LANDUSE REGULATION PROGRAM FILE NUMBER.
3. RMT FLOOD HAZARD LIMIT BASED ON THE POST SOURCE REDUCTION GROUND ELEVATIONS (2005) SHOWN AND FLOOD HAZARD AREA ELEVATIONS OBTAINED FROM THE STATE OF NEW JERSEY, DEPARTMENT OF ENVIRONMENTAL PROTECTION, DIVISION OF WATER RESOURCES, DELINEATION OF FLOODWAY AND FLOOD HAZARD AREA (SHEET C-16) AND THE PROFILE-ROCKAWAY RIVER (SHEET 5), DECEMBER 1985.

N

0 60' 120' 180' 240'
SCALE IN FEET

NO.	BY	DATE	REVISION	APPD.
5.				
4.				
3.				
2.				
1.				

DAYCO CORPORATION / L.E. CARPENTER & COMPANY
SUPERFUND SITE
WHARTON, NEW JERSEY

WETLAND, 100 YEAR FLOODPLAIN, FLOODWAY, AND FLOOD HAZARD MAP

DRAWN BY: SJL	DRAWING SCALE: SHOWN	PROJECT NO. J:\06527\37	
CHECKED BY: JDD,DMB		FILE NO. 6527.37.18.F3.dwg	
APPROVED BY: NLC	DATE PRINTED:	**FIGURE F3**	
DATE: December 2009			

RMT
3754 Ranchero Drive
Ann Arbor, Michigan 48108-2771
Phone: 734-971-7080
Fax: 734-971-9022

RMT COMPUTER AIDED DESIGN AND DRAFTING

Layout: Wetland Features (F3)
Dwg Size: 0.23 Mb
Plot Date: April 2008
Plot Time: 1:43 PM
Drawing Name: J:\06527\37\6527.37.18.F3.dwg
Operator Name: LUCIDO, SAM
Drawing Plot Scale: 1:40

MAP LEGEND

Area of Interest (AOI)
- Area of Interest (AOI)

Soils
- Soil Map Units

Special Point Features
- Blowout
- Borrow Pit
- Clay Spot
- Closed Depression
- Gravel Pit
- Gravelly Spot
- Landfill
- Lava Flow
- Marsh or swamp
- Mine or Quarry
- Miscellaneous Water
- Perennial Water
- Rock Outcrop
- Saline Spot
- Sandy Spot
- Severely Eroded Spot
- Sinkhole
- Slide or Slip
- Sodic Spot
- Spoil Area
- Stony Spot
- Very Stony Spot
- Wet Spot
- Other

Special Line Features
- Gully
- Short Steep Slope
- Other

Political Features
- Cities

Water Features
- Oceans
- Streams and Canals

Transportation
- Rails
- Interstate Highways
- US Routes
- Major Roads
- Local Roads

- PROPOSED LIMITS OF WORK

MAP INFORMATION

Map Scale: 1:1,840 if printed on A size (8.5" × 11") sheet.

The soil surveys that comprise your AOI were mapped at 1:24,000.

Please rely on the bar scale on each map sheet for accurate map measurements.

Source of Map: Natural Resources Conservation Service
Web Soil Survey URL: http://websoilsurvey.nrcs.usda.gov
Coordinate System: UTM Zone 18N NAD83

This product is generated from the USDA-NRCS certified data as of the version date(s) listed below.

Soil Survey Area: Morris County, New Jersey
Survey Area Data: Version 7, Oct 22, 2008

Date(s) aerial images were photographed: 8/13/2006

The orthophoto or other base map on which the soil lines were compiled and digitized probably differs from the background imagery displayed on these maps. As a result, some minor shifting of map unit boundaries may be evident.

Map Unit Legend

Morris County, New Jersey (NJ027)			
Map Unit Symbol	**Map Unit Name**	**Acres in AOI**	**Percent of AOI**
HhmCa	Hibernia loam, 3 to 15 percent slopes, stony	0.1	0.3%
RkgBb	Ridgebury loam, 0 to 8 percent slopes, very stony	5.5	32.2%
UR	Urban land	5.3	30.8%
USROCC	Urban land-Rockaway complex, 3 to 15 percent slopes	3.8	22.2%
WATER	Water	0.6	3.6%
WhvAb	Whitman loam, 0 to 3 percent slopes, very stony	1.9	10.9%
Totals for Area of Interest		**17.2**	**100.0%**

NO.	BY	DATE	REVISION	APP'D.
5.				
4.				
3.				
2.				
1.				

DAYCO CORPORATION / L.E. CARPENTER & COMPANY
SUPERFUND SITE
WHARTON, NEW JERSEY

USDA SOIL TYPES

DRAWN BY: SJL	DRAWING SCALE: SHOWN	PROJECT NO. J:\06527\37	
CHECKED BY: JDD,DMB		FILE NO. 6527.37.19.F4.dwg	
APPROVED BY: NLC	DATE PRINTED:	**FIGURE F4**	
DATE: December 2009			

RMT
3754 Ranchero Drive
Ann Arbor, Michigan 48108-2771
Phone: 734-971-7080
Fax: 734-971-9022

RMT COMPUTER AIDED DESIGN AND DRAFTING

Drawing Name: J:\06527\37\6527.37.19.F4.dwg
Operator Name: LUCIDO, SAM
Drawing Plot Scale: 1:40
Dwg Size: 0.13 Mb
Plot Date: April 2008
Plot Time: 1:39 PM
Layout: USDA Soils Data (F4)

Morris County - Soil Erosion & Sediment Control Notes

1. All Soil Erosion and Sediment Control Practices will be installed in accordance with the Standards for Soil Erosion and Sediment Control in New Jersey, and will be in place prior to any major soil disturbance, or in their proper sequence and maintained until permanent protection is established.
2. Any disturbed area that will be left exposed for more than thirty (30) days and not subject to construction traffic shall immediately receive a temporary seeding. If the season prohibits temporary seeding, the disturbed area will be mulched with straw or hay and tacked in accordance with the New Jersey Standards. See Note 21 below.
3. Permanent vegetation is to be established on exposed areas within ten (10) days after final grading. Mulch is to be used for protection until vegetation is established. See Note 22 below.
4. Immediately following initial disturbance or rough grading. Critical areas (steep slopes, sandy soils, wet conditions) subject to erosion will receive a temporary seeding in accordance with Note 21 below.
5. Temporary Diversion Berms are to be installed on all cleared roadways and easement areas.
6. Permanent seeding and stabilization to be in accordance with the "Standards for Permanent Vegetative Cover for Soil Stabilization Cover." Specified rates and locations shall be on the approved Soil Erosion and Sediment Control Plan.
7. The site shall at all times be graded and maintained so that all storm water runoff is diverted to Soil Erosion and Sediment Control facilities.
8. All sedimentation structures (silt fence) will be inspected and maintained daily.
9. Stockpiles shall not be located with 50 feet of a floodplain, slope, drainage facility, or roadway. All stockpile bases shall have a silt fence properly entrenched at the toe of the slope.
10. A Stabilized Construction Access will be installed, whenever an earthen road intersects with a paved road. See the Stabilized Construction Access detail and chart for dimensions.
11. All new roadways will be treated with suitable subbase upon establishment of final grade elevations.
12. Paved roadways must be kept clean at all times.
13. Before discharge points become operational, all storm drainage outlets will be stabilized as required.
14. All dewatering operations must be discharged directly into a sediment filter area. The filter should be composed of a fabric or approved material.
15. All sediment basins will be cleaned when the capacity has been reduced by 50 percent. A clean out elevation will be identified on the plan and a marker installed on the site.
16. During and after construction, the applicant will be responsible for the maintenance and upkeep of the drainage structures, vegetation cover, and any other measures deemed appropriate by the District. Said responsibility will end when completed work is approved by the Morris County Soil Conservation District.
17. All trees outside the disturbance limit indicated on the subject plan or those trees within the disturbance area which are designated to remain after construction are to be protected with tree protection devices.
18. The Morris County Soil Conservation District may request additional measures to minimize onsite or off-site erosion problems during construction.
19. The Morris County Soil Conservation District must be notified, in writing, at least 72 hours prior to any land disturbance, and a pre-construction meeting held.
20. **Topsoil Stockpile Protection**
    a. Apply Ground Limestone at a rate of 90 lbs. per 1000 sq. ft.
    b. Apply fertilizer (10-20-10) at a rate of 11 lbs. per 1000 sq. ft.
    c. Apply Perennial Ryegrass seed at 1 lb. per 1000 sq. ft. and Annual Ryegrass at 1 lb. per 1000 sq. ft
    d. Mulch stockpile with straw or hay at a rate of 90 lbs. per 1000 sq. ft.
    e. Apply a liquid mulch binder or tack to straw or hay mulch.
    f. Properly entrench a silt fence at the bottom of the stockpile.
21. **Temporary Stabilization Specifications**
    a. Apply Ground Limestone at a rate of 90 lbs. per 1000 sq. ft.
    b. Apply fertilizer (10-20-10) at a rate of 11 lbs. per 1000 sq. ft.
    c. Apply Perennial Ryegrass seed at 1 lb. per 1000 sq. ft. and Annual Ryegrass at 1 lb. per 1000 sq. ft.
    d. Mulch stockpile with straw or hay at a rate of 90 lbs. per 1000 sq. ft.
    e. Apply a liquid mulch binder or tack to straw or hay mulch.
22. **Permanent Stabilization Specifications**
    a. Apply topsoil to a depth of 5 inches (unsettled)
    b. Apply Ground Limestone at a rate of 90 lbs. per 1000 sq. ft. and work four inches into soil
    c. Apply fertilizer (10-20-10) at a rate of 11 lbs. per 1000 sq. ft.
    d. Apply Hard Fescue seed at 2.7 lbs. per 1000 sq. ft. and Creeping Red Fescue seed at 0.7 lbs. per 1000 sq. ft. and Perennial Ryegrass seed at 0.25 lbs. per 1000 sq. ft.
    e. Mulch stockpile with straw or hay at a rate of 90 lbs. per 1000 sq. ft.
    f. Apply a liquid mulch binder or tack to straw or hay mulch.

NOTE: 72 HOURS PRIOR TO ANY SOIL DISTURBANCE, NOTICE IN WRITING SHALL BE GIVEN TO THE MORRIS COUNTY SOIL CONSERVATION DISTRICT AND A PRE-CONSTRUCTION MEETING HELD

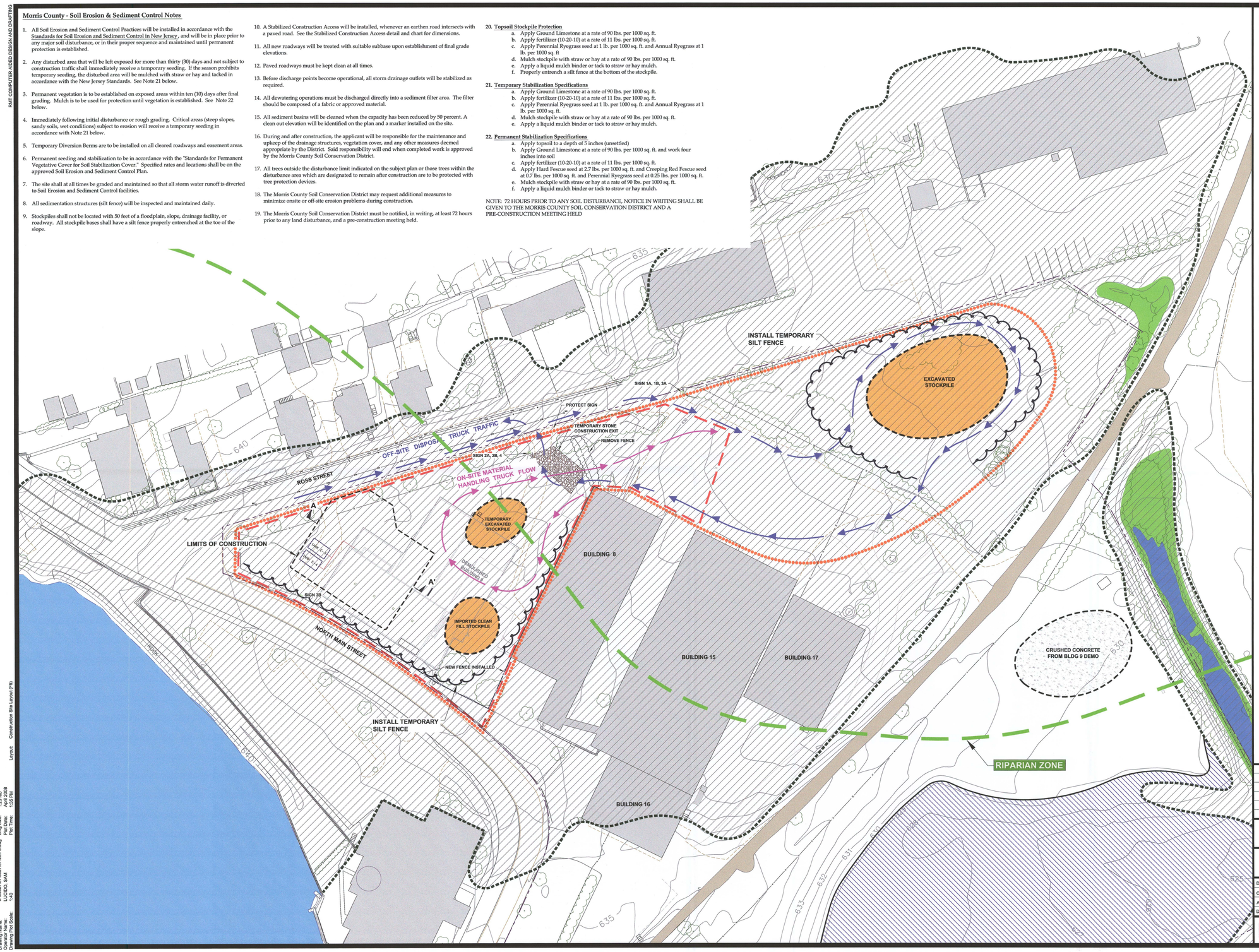

LEGEND

- APPROXIMATE PROPERTY LINE
- FENCE LINE
- TREES
- 630 POST-REMEDIATION GROUND SURFACE ELEVATIONS
- SAN SANITARY SEWER
- GAS GAS
- STM REGIONAL STORM SEWER LINE
- W WATER
- LIMITS OF HEALTH & SAFETY EXCLUSION ZONE
- LIMIT OF DISTURBANCE LINE
- OFF-SITE DISPOSAL TRUCK TRAFFIC
- ON-SITE MATERIAL HANDLING TRUCK FLOW
- SILT FENCE
- NJDEP FLOOD HAZARD BOUNDARY
- RIPARIAN ZONE (300 ft. FROM EDGE OF STATE OPEN WATERS
- RAILS TO TRAILS
- REGULATED WETLAND
- STATE OPEN WATERS
- NJDEP FLOOD HAZARD AREA
- RMT FLOOD HAZARD LIMIT (See Note 3; Sheet F3)

NOTES

1. BASE MAP DEVELOPED FROM TOPOGRAPHIC SURVEY PROVIDED BY:JAMES M.STEWART, INC. LAND SURVEYORS, DRAWING NO 2793-03.DWG, DATED 02-14-02 AS REVISED 04-10-07 (DRAWING NO. 314907REV.DWG).

N

0 40' 80' 120' 160'
SCALE IN FEET

NO.	BY	DATE	REVISION	APP'D.
5.				
4.				
3.				
2.				
1.				

DAYCO CORPORATION / L.E. CARPENTER & COMPANY SUPERFUND SITE
WHARTON, NEW JERSEY

MW19HS1 CONSTRUCTION SITE LAYOUT

DRAWN BY: SJL	DRAWING SCALE:	PROJECT NO.	J:\06527\37
CHECKED BY: DBM,NLC	SHOWN	FILE NO.	6527.37.20.F5.dwg
APPROVED BY: NLC	DATE PRINTED:	**FIGURE F5**	
DATE: December 2009			

RMT
3754 Ranchero Drive
Ann Arbor, Michigan 48108-2771
Phone: 734-971-7080
Fax: 734-971-9022

RMT COMPUTER AIDED DESIGN AND DRAFTING

Drawing Name: J:\06527\37\6527.37.20.F5.dwg
Drawing Path: U:\SJL\CAD\, DAM
Drawing Plot Scale: 1:40
Dwg Size: 1.23 Mb
Plot Date: April 2009
Plot Time: 1:35 PM
Layout: Construction Site Layout (F5)

RMT COMPUTER AIDED DESIGN AND DRAFTING

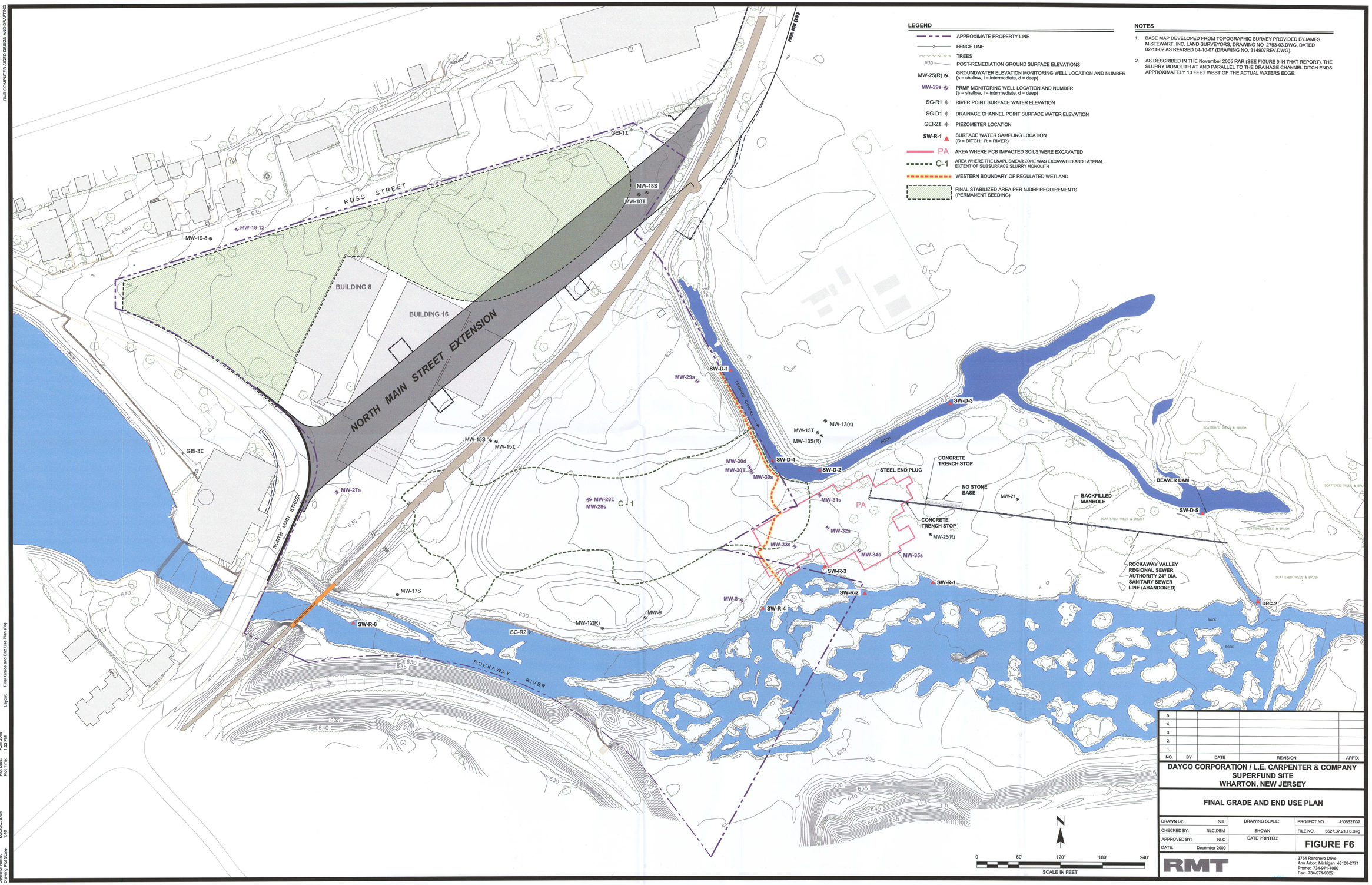

LEGEND

- APPROXIMATE PROPERTY LINE
- FENCE LINE
- TREES
- 630 — POST-REMEDIATION GROUND SURFACE ELEVATIONS
- MW-25(R) — GROUNDWATER ELEVATION MONITORING WELL LOCATION AND NUMBER (s = shallow, i = intermediate, d = deep)
- MW-29s — PRMP MONITORING WELL LOCATION AND NUMBER (s = shallow, i = intermediate, d = deep)
- SG-R1 — RIVER POINT SURFACE WATER ELEVATION
- SG-D1 — DRAINAGE CHANNEL POINT SURFACE WATER ELEVATION
- GEI-2I — PIEZOMETER LOCATION
- SW-R-1 — SURFACE WATER SAMPLING LOCATION (D = DITCH; R = RIVER)
- PA — AREA WHERE PCB IMPACTED SOILS WERE EXCAVATED
- C-1 — AREA WHERE THE LNAPL SMEAR ZONE WAS EXCAVATED AND LATERAL EXTENT OF SUBSURFACE SLURRY MONOLITH
- WESTERN BOUNDARY OF REGULATED WETLAND
- FINAL STABILIZED AREA PER NJDEP REQUIREMENTS (PERMANENT SEEDING)

NOTES

1. BASE MAP DEVELOPED FROM TOPOGRAPHIC SURVEY PROVIDED BY JAMES M.STEWART, INC. LAND SURVEYORS, DRAWING NO 2793-03.DWG, DATED 02-14-02 AS REVISED 04-10-07 (DRAWING NO. 314907REV.DWG).
2. AS DESCRIBED IN THE November 2005 RAR (SEE FIGURE 9 IN THAT REPORT), THE SLURRY MONOLITH AT AND PARALLEL TO THE DRAINAGE CHANNEL DITCH ENDS APPROXIMATELY 10 FEET WEST OF THE ACTUAL WATERS EDGE.

NO.	BY	DATE	REVISION	APP'D.
5.				
4.				
3.				
2.				
1.				

DAYCO CORPORATION / L.E. CARPENTER & COMPANY
SUPERFUND SITE
WHARTON, NEW JERSEY

FINAL GRADE AND END USE PLAN

DRAWN BY: SJL	DRAWING SCALE:	PROJECT NO.	J:\06527\37
CHECKED BY: NLC,DBM	SHOWN	FILE NO.	6527.37.21.F6.dwg
APPROVED BY: NLC	DATE PRINTED:		
DATE: December 2009			**FIGURE F6**

RMT
3754 Ranchero Drive
Ann Arbor, Michigan 48108-2771
Phone: 734-971-7080
Fax: 734-971-9022

Drawing Name: J:\06527\37\6527.37.21.F6.dwg
Drawing Date: LUCIDO, SAM
Drawing Plot Scale: 1:40
Dwg Size: 3.54 Mb
Plot Date: 12/14/2009
Plot Time: 1:52 PM
Layout: Final Grade and End Use Plan (F6)

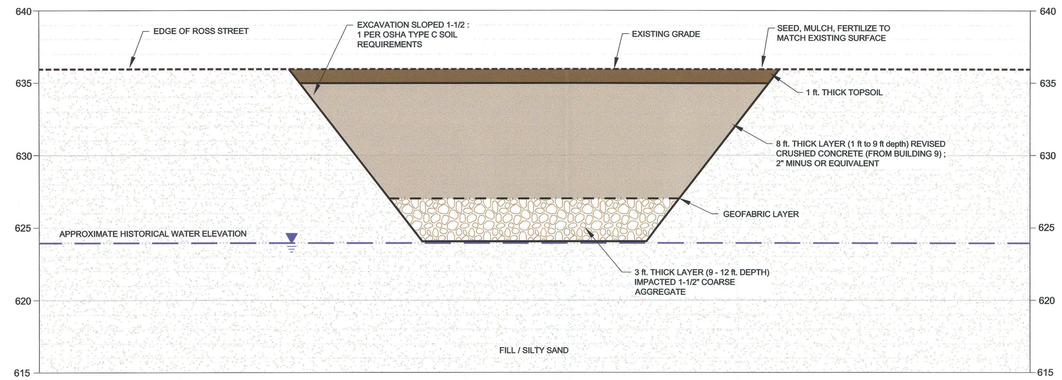

1 / F7

SITE PROFILE A - A' (TYPICAL)

SCALE: VER: 1" = 5'
HOR: 1" = 50'

LEGEND

- APPROXIMATE GROUND SURFACE
- STRATIGRAPHIC BOUNDARY
- APPROXIMATE GROUNDWATER ELEVATION
- TOPSOIL
- REVISED CRUSHED CONCRETE
- COARSE AGGREGATE
- FILL / SILTY SAND

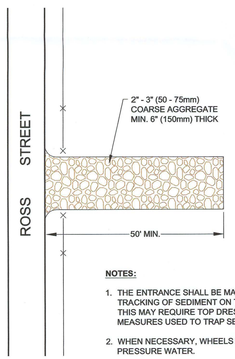

NOTES:

1. THE ENTRANCE SHALL BE MAINTAINED IN A CONDITION THAT WILL PREVENT TRACKING OF SEDIMENT ON TO PUBLIC RIGHT-OF-WAY, OR ROSS STREET. THIS MAY REQUIRE TOP DRESSING. REPAIR AND / OR CLEANOUT OF ANY MEASURES USED TO TRAP SEDIMENT.
2. WHEN NECESSARY, WHEELS SHALL BE CLEANED AT DECON PAD WITH HIGH PRESSURE WATER.

2 / F7

TEMPORARY STONE CONSTRUCTION ENTRANCE / EXIT DETAIL (TYPICAL)

NOT TO SCALE

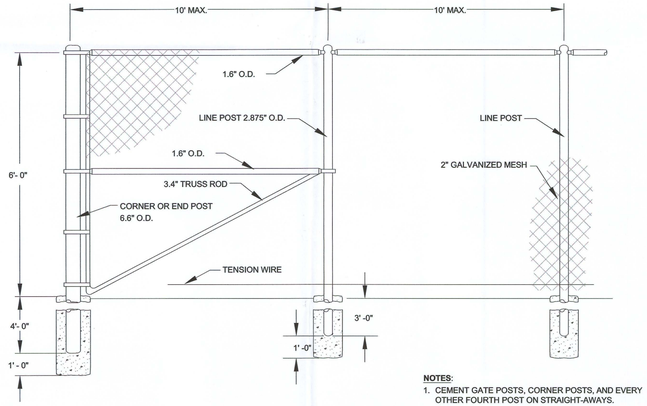

NOTES:

1. CEMENT GATE POSTS, CORNER POSTS, AND EVERY OTHER FOURTH POST ON STRAIGHT-AWAYS.

3 / F7

CHAIN LINK FENCE

NOT TO SCALE

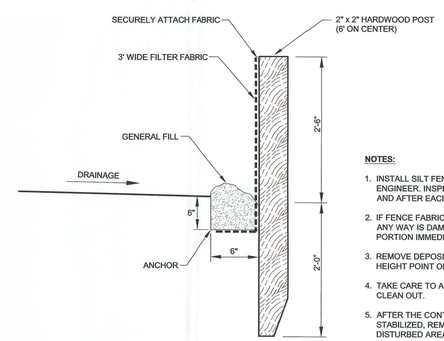

NOTES:

1. INSTALL SILT FENCE AT LOCATIONS AS DIRECTED BY ENGINEER. INSPECT THE SILT FENCE PERIODICALLY AND AFTER EACH STORM EVENT.
2. IF FENCE FABRIC TEARS, STARTS TO DECOMPOSE, OR IN ANY WAY IS DAMAGED, REPLACE THE AFFECTED PORTION IMMEDIATELY.
3. REMOVE DEPOSITED SEDIMENT WHEN IT REACHES 33% HEIGHT POINT OR IS CAUSING THE FABRIC TO BULGE.
4. TAKE CARE TO AVOID UNDERMINING THE FENCE DURING CLEAN OUT.
5. AFTER THE CONTRIBUTING DAMAGE AREA HAS BEEN STABILIZED, REMOVE SEDIMENT DEPOSITS, BRING THE DISTURBED AREA TO GRADE, STABILIZE.

4 / F7

SEDIMENT CONTROL (SILT) FENCE

NOT TO SCALE

NO.	BY	DATE	REVISION	APP'D.
5.				
4.				
3.				
2.				
1.				

DAYCO CORPORATION / L.E. CARPENTER & COMPANY
SUPERFUND SITE
WHARTON, NEW JERSEY

MW19HS1 CONSTRUCTION DETAILS

DRAWN BY: SJL	DRAWING SCALE:	PROJECT NO.	J:\06527\37
CHECKED BY: JDD,NLC	SHOWN	FILE NO.	6527.37.22.F7.dwg
APPROVED BY: NLC	DATE PRINTED:	FIGURE F7	
DATE: December 2009			

RMT
3754 Ranchero Drive
Ann Arbor, Michigan 48108-2771
Phone: 734-971-7080
Fax: 734-971-9022

RMT COMPUTER AIDED DESIGN AND DRAFTING

Drawing Name: J:\06527\37\6527.37.22.F7.dwg Dwg Size: 0.15 Mb
Operator Name: LUCIO, SAM Plot Date: April 2008
Drawing Plot Scale: 1:20 Plot Time: 1:29 PM
Layout: MW19HS1 Construction Details (F7)