II-5.3 TEMPORARY COVER PRACTICES

II-5.3.1 BMP E1.10: Temporary Seeding of Stripped Areas

Code: TS Symbol:

Definition The establishment of a temporary vegetative cover on disturbed areas by seeding with appropriate rapidly growing annual plants.

Purpose

To provide temporary soil stabilization by planting grasses and legumes to areas which would remain bare for more than 7 days where permanent cover is not necessary or appropriate.

Conditions Where Practice Applies

- Permanent structures are to be installed or extensive re-grading of the area will occur prior to the establishment of permanent vegetation.
- Areas which will not be subjected to heavy wear by construction traffic.
- Areas sloping up to 10% for 100 feet or less (where temporary seeding is the only BMP used.

Advantages

- This is a relatively inexpensive form of erosion control but should only be used on sites awaiting permanent planting or grading. Those sites should have permanent measures used (see BMP E1.35, Permanent Seeding and Planting).
- Vegetation will not only prevent erosion from occurring, but will also trap sediment in runoff from other parts of the site.
- Temporary seeding offers fairly rapid protection to exposed areas.

Disadvantages/Problems

- Temporary seeding is only viable when there is a sufficient window in time for plants to grow and establish cover. During the establishment period the bare soil should be protected with mulch (see BMP E1.15) and/or clear plastic covering (see BMP E1.20).
- If sown on subsoil, growth will be poor unless heavily fertilized and limed. Because over-fertilization can cause pollution of stormwater runoff, other practices such as mulching (BMP E1.15) alone may be more appropriate. The potential for over-fertilization is an even worse problem in or near aquatic systems.
- Once seeded, areas cannot be used for heavy traffic.
- May require regular irrigation to flourish. Regular irrigation is not encouraged because of the expense and the potential for erosion in areas that are not regularly inspected. The use of low maintenance native species should be encouraged, and planting should be timed to minimize the need for irrigation.

Planning Considerations

Sheet erosion, caused by the impact of rain on bare soil, is the source of most fine particles in sediment. To reduce this sediment load in runoff, the soil surface

KCSlip4 35261

SEA401806

itself should be protected. The most efficient and economical means of controlling sheet and rill erosion is to establish vegetative cover. Annual plants which sprout rapidly and survive for only one growing season are suitable for establishing temporary vegetative cover. Temporary seeding is effective when combined with construction phasing so bare areas of the site are minimized at all times.

Temporary seeding may prevent costly maintenance operations on other erosion control systems. For example, sediment basin clean-outs will be reduced if the drainage area of the basin is seeded where grading and construction are not taking place. Perimeter dikes will be more effective if not choked with sediment.

Temporary seeding is essential to preserve the integrity of earthen structures used to control sediment, such as dikes, diversions, and the banks and dams of sediment basins.

Proper seedbed preparation and the use of quality seed are important in this practice just as in permanent seeding. Failure to carefully follow sound agronomic recommendations will often result in an inadequate stand of vegetation that provides little or no erosion control.

Design Criteria

- Time of Planting - Planting should preferably be done between April 1 and June 30, and September 1 through October 31. If planting is done in the months of July and August, irrigation may be required. If planting is done between November 1 and March 31, mulching shall be required immediately after planting. If seeding is done during the summer months, irrigation of some sort will probably be necessary.

- Site Preparation - Before seeding, install needed surface runoff control measures such as gradient terraces, interceptor dike/swales, level spreaders, and sediment basins.

- Seedbed Preparation - The seedbed should be firm with a fairly fine surface. Perform all cultural operations across or at right angles to the slope. See BMP E1.45, Topsoiling, and BMP E2.35, Surface Roughening for more information on seedbed preparation. A minimum of 2-4 inches of tilled topsoil is required.

- Fertilization - as per suppliers and/or Soil Conservation Service recommendations. Developments adjacent to water bodies must use non-phosphorus fertilizer.

- Seeding - seeding mixtures will vary depending on the exact location, soil type, slope, etc. Information on mixes may be obtained from local suppliers, the Washington State Department of Transportation, or the Soil Conservation Service. However, approval to use any particular mix must be obtained from the local government. The following seed mix is supplied as guidance.

Name	Proportions By Weight	Percent Purity	Percent Germination
Redtop (*Agrostis alba*)	10%	92	90
Annual Rye (*Lolium multiflorum*)	40%	98	90
Chewings Fescue (*Festuca rubra commutata*)	40%	97	80
White Dutch Clover (*Trifolium repens*)	10%	96	90

- "Hydro-seeding" applications with approved seed-mulch-fertilizer mixtures may also be used.

KCSlip4 35262

SEA401807

Maintenance

- Seeding should be supplied with adequate moisture. Supply water as needed, especially in abnormally hot or dry weather or on adverse sites. Water application rates should be controlled to prevent runoff.

- Re-seeding - Areas which fail to establish vegetative cover adequate to prevent erosion shall be re-seeded as soon as such areas are identified.

- All temporary erosion and sediment control measures should be removed within 30 days after final site stabilization is achieved or after the temporary BMPs are no longer needed. Trapped sediment must be removed or stabilized on site. Disturbed soil areas resulting from removal should be permanently stabilized.

KCSlip4 35263

SEA401808

II-5.3.2 BMP E1.15: Mulching and Matting

Code: MU Symbol:

Definition Application of plant residues or other suitable materials to the soil surface.

Purpose

To provide immediate protection to exposed soils during the period of short construction delays, or over winter months through the application of plant residues, or other suitable materials, to exposed soil areas.

Mulches also enhance plant establishment by conserving moisture and moderating soil temperatures. Mulch helps hold fertilizer, seed, and topsoil in place in the presence of wind, rain, and runoff and maintains moisture near the soil surface.

Conditions Where Practice Applies

- In areas which have been seeded either for temporary or permanent cover, mulching should immediately follow seeding.
- Areas which cannot be seeded because of the season, or are otherwise unfavorable for plant growth.
- Areas which have been seeded as specified in Temporary Seeding (BMP E1.10).
- In an area of greater than 2:1 slope, mulching should immediately follow seeding.

Advantages

- Mulching offers instant protection to exposed areas.
- Mulches conserve moisture and reduce the need for irrigation.
- Neither mulching nor matting require removal; seeds can grow through them unlike plastic coverings.

Disadvantages/Problems

- Care must be taken to apply mulch at the specified thickness, and on steep slopes mulch must be supplemented with netting.
- Thick mulches can reduce the soil temperature, delaying seed germination.
- Mulches such as straw, which are often applied to areas after grading must then be removed and either composted or landfilled. Straw is hollow, so it can actually draw water into the ground below it if the straw is at an angle.

Planning Considerations

Mulches are applied to the soil surface to conserve a desirable soil property or to promote plant growth. A surface mulch is one of the most effective means of controlling runoff and erosion on disturbed land (see Figure II-5.1 for a comparison of pollutant loading reductions for various mulches).

Mulches can increase the infiltration rate of the soil, reduce soil moisture loss by evaporation, prevent crusting and sealing of the soil surface, modify soil temperatures, and provide a suitable microclimate for seed germination.

Organic mulch materials, such as straw, wood chips, bark, and wood fiber, have been

KCSlip4 35264

SEA401809

found to be the most effective.

A variety of nets and mats have been developed for erosion control in recent years, and these are also used as mulches, particularly in critical areas such as waterways. They may be used to hold other mulches to the soil surface.

The choice of materials for mulching will be based on the type of soil to be protected, site conditions, season, and economics. It is especially important to mulch liberally in mid-summer and prior to winter, and on cut slopes and southern slope exposures. Table II-5.1 gives a comparison of costs based on 1988 figures.

Organic Mulches

Straw - Straw is the mulch most commonly used in conjunction with seeding. Its use is recommended where immediate protection is desired and preferably where the need for protection will be less than 3 months. The straw should come from wheat or oats, and may be spread by hand or machine. If the straw is not clean, weed growth can occur. Straw can be windblown and must be anchored down. Common anchoring methods are:

1. Crimping, disking, rolling or punching into the soil;

2. Covering with netting;

3. Spraying with a chemical or fiber binder (tackifier); and

4. Keeping moist. Natural precipitation can often provide sufficient moisture.(2)

Corn Stalks - These should be shredded into 4 to 6-inch lengths. Stalks decompose slowly and are resistant to windblow.

Wood Chips - Suitable for areas that will not be closely mowed, and around ornamental plantings. Chips decompose slowly and do not require tacking. They must be treated with 12 pounds nitrogen per ton to prevent nutrient deficiency in plants. Chips can be a very inexpensive mulch if they are obtained from trees cleared on the site. However, both wood and bark chips tend to wash down slopes of more than 6 percent and create problems by clogging inlet grates etc. and are therefore not preferred for use in those areas.

Bark Chips, Shredded Bark - By-products of timber processing. Used in landscaped plantings. Bark is also a suitable mulch for areas planted to grasses and not closely mowed; may be applied by hand or mechanically. Bark is not usually toxic to grasses or legumes, and additional nitrogen fertilizer is not required.

Wood Fiber - Used in hydro-seeding operations, applied as part of the slurry. These short cellulose fibers do not require tacking, although a tacking agent or soil binders are sometimes used with wood fiber. The longer the fiber length, the better the wood fiber will work in erosion control. This form of mulch does not provide sufficient protection to erodible soils to be used alone during the severe heat of summer or for late fall seedings. Wood fiber hydro-seed slurries may be used to tack straw mulch. This combination treatment is well suited for steep slopes and critical areas, and severe climate conditions.

There are other organic materials which make excellent mulches but are only available locally or seasonally. Creative use of these materials can reduce costs.

Manure Mulches - Manure mulches should be well-aged and are not recommended for use near waterbodies.

Chemical Mulches and Soil Binders

The use of synthetic, spray-on materials (except tacking agents used with hydro-seeding) is not recommended. A major problem with their use is the creation of impervious surfaces and, possibly, adverse effects on water quality. Research has

KCSlip4 35265

SEA401810

shown that they can cause more erosion when used than does bare exposed soil.

Nets and Mats - Used alone, netting does not retain soil moisture or modify soil temperature. It stabilizes the soil surface while grasses are being established, and is useful in grassed waterways and on slopes. Light netting may also be used to hold other mulches in place. Its relatively high cost makes it most suitable for small sites.

The most critical aspect of installing nets and mats is obtaining firm, continuous contact between the material and the soil. Without such contact, the material is useless and erosion occurs. It is important to use an adequate number of staples and to roll the material after laying it to ensure that the soil is protected.

Table II-5.1 Summary of Estimated Service Lives and Costs
1988 Base - Horner, January, 1990

Technique[a]	Estimated Service Life (months)	Estimated Cost ($/(acre served) (6 months service)
Straw (4 T/ac)	3	3,200
Straw (1.25 T/ac)	3	2,500
Straw (4 T/ac) manure-mulched, fertilized, seeded	6	2,400
Jute mat	6	3,700
Excelsior	6	3,600
Woven straw blanket	6	4,100
Synthetic fiber blanket	6	3,300
Wood fiber mulch (1.25 T/ac) fertilized, seeded	6	1,300
Wood fiber mulch (1.25 T/ac) with tackifier (50 gal/ac), fertilized, seeded	6	1,900
Wood fiber mulch (1.25 T/ac) with tackifier (90 gal/ac), fertilized, seeded	6	2,100
Wood fiber mulch (1.25 T/ac) with tackifier (120 gal/ac), fertilized, seeded	6	2,300
Chemical agent	6	2,100
Plastic sheeting	6	2,300
Designed sedimentation pond	> 6	< 4,200
Non-designed pond	> 6	< 7,500

[a] The estimated cost of seeding where it was used is based on hydro-seeding (approximately $500/acre).

KCSlip4 35266

SEA401811

Figure II-5.1 Mean TSS and Overall Pollutant Loading Reductions of Slope Treatments Relative to Controls from Horner, January, 1990

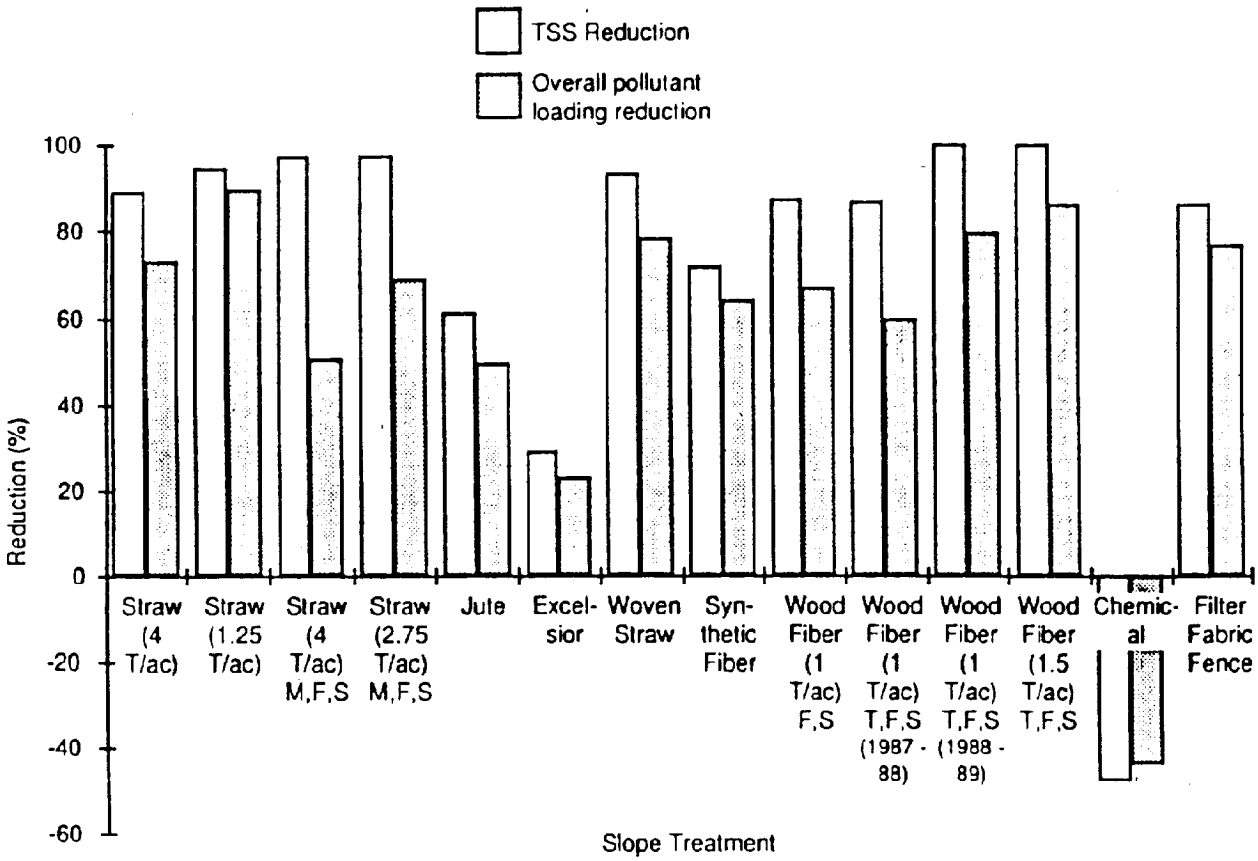

Figure 3. Mean TSS and Overall Pollutant Loading Reductions of Slope Treatments Relative to Controls

KCSlip4 35267

SEA401812

Design Criteria

- Site Preparation - Same as Temporary Seeding.
- Mulch Materials, Application Rates, and Specifications - See Table II-5.2.
- Erosion blankets (nets and mats) may be used on level areas, on slopes up to 50 percent, and in waterways. Where soil is highly erodible, nets shall only be used in connection with an organic mulch such as straw and wood fiber. Jute nets shall be heavy, uniform cloth woven of single jute yarn, which if 36 to 48 inches wide shall weigh an average of 1.2 lbs./linear yard. It must be so applied that it is in complete contact with the soil. If it is not, erosion will occur beneath it. Netting shall be securely anchored to the soil with No. 11 gauge wire staples at least 6 inches long, with an overlap of three inches.
- Excelsior blankets are considered protective mulches and may be used alone on erodible soils and during all times of year.
- See Figure II-5.2 for orientation of netting and matting.

Maintenance

- Mulched areas should be checked periodically, especially following severe storms, when damaged areas of mulch or tie-down material should be repaired.
- All temporary erosion and sediment control measures shall be removed within 30 days after final site stabilization is achieved or after the temporary BMPs are no longer needed. Trapped sediment shall be removed or stabilized on site. Disturbed soil areas resulting from removal shall be permanently stabilized.

References

Horner, Richard R., Juno Guedry and Michael H. Kortenhof, Improving the Cost Effectiveness of Highway Construction Site Erosion and Pollution Control, Washington State Dept. of Transportation, WA-RD 200.1, January, 1990.

KCSlip4 35268

SEA401813

Table II-5.2 Guide to Mulch Materials, Rates and Uses

Mulch Material	Quality Standards	Application Rates /1000 ft²	Application Rates /acre	Depth of Application	Remarks[1]
Gravel, slag or crushed stone	Washed, ¾ - 1½" size	9 yds³		3 inches	Excellent mulch for short slopes and around woody plants & ornamentals. Use where subject to foot traffic. Approx. 2000 lbs/yd³
Hay or straw	Air dried, free from unwanted seeds & coarse material	75-100 lbs. or 2-3 bales	1½-2½ tons or 90-120 bales	Minimum of 2 inches	Use where the mulching effect is to be maintained for >3 months. Is subject to wind blowing unless kept moist or tacked down. Most common & widely used mulching material. Can be used in critical erosion areas.
Wood fiber cellulose (partially digested wood fibers)	Dyed green should not contain growth inhibiting factors.	25 - 30 lbs.	1000-1500 lbs.		If used on critical areas, double the normal application rate. Apply w/hydromulcher. No tie-down required. Packaged in 100 lb. bags.

[1]All mulches will provide some degree of (1) erosion control, (2) moisture conservation, (3) weed control, and (4) reduction of soil crusting.

KCSlip4 35269

SEA401814

II-5.6 STRUCTURAL EROSION CONTROL BMPs.

II-5.6.1 BMP E2.10: Stabilized Construction Entrance and Tire Wash

Code: CE Symbol:

Definition A temporary stone-stabilized pad located at points of vehicular ingress and egress on a construction site.

Purpose

To reduce the amount of mud, dirt, rocks, etc. transported onto public roads by motor vehicles or runoff by constructing a stabilized pad of rock spalls at entrances to construction sites and washing of tires during egress.

Conditions Where Practice Applies

- Whenever traffic will be leaving a construction site and moving directly onto a public road or other paved areas.

Advantages

- Mud on vehicle tires is significantly reduced which avoids hazards caused by depositing mud on the public roadway.
- Sediment, which is otherwise contained on the construction site, does not enter stormwater runoff elsewhere.

Planning Considerations

Construction entrances provide an area where mud can be removed from vehicle tires before they enter a public road. If the action of the vehicle traveling over the gravel pad is not sufficient to remove the majority of the mud, then the tires must be washed before the vehicle enters a public road. If washing is used, provisions must be made to intercept the wash water and trap the sediment before it is carried off-site. Construction entrances should be used in conjunction with the stabilization of construction roads to reduce the amount of mud picked up by vehicles.

It is important to note that this BMP will only be effective if sediment control is used throughout the rest of the construction site.

Design Criteria

- Material should be quarry spalls (where feasible), 4 inches to 8 inches size.
- The rock pad shall be at least 12 inches thick and 100 feet in length for sites more than 1 acre; and may be reduced to 50 feet in length for sites less than 1 acre.
- A filter fabric fence (see BMP E3.10) should be installed down-gradient from the construction entrance in order to contain any sediment-laden runoff from the entrance.
- Width shall be the full width of the vehicle ingress and egress area (minimum 20 feet).
- Additional rock should be added periodically to maintain proper function of the pad.
- See Figure II-5.4 for details.

KCSlip4 35270

SEA401815

- Tire washing should be done before the vehicle enters a paved street. Washing should be done on an area covered with crushed rock and the wash water should be drained to a sediment retention facility such as a sediment trap or basin.

- The volume of wash water produced by tire washing should be included when calculating the sediment trap or basin size.

Maintenance

- The entrance shall be maintained in a condition which will prevent tracking or flow of mud onto public rights-of-way. This may require periodic top dressing with 2-inch stone, as conditions demand, and repair and/or cleanout of any structures used to trap sediment. All materials spilled, dropped, washed, or tracked from vehicles onto roadways or into storm drains must be removed immediately.

- All temporary erosion and sediment control measures shall be removed within 30 days after final site stabilization is achieved or after the temporary BMPs are no longer needed. Trapped sediment shall be removed or stabilized on site. Disturbed soil areas resulting from removal shall be permanently stabilized.

Figure II-5.4 Stabilized Construction Entrance

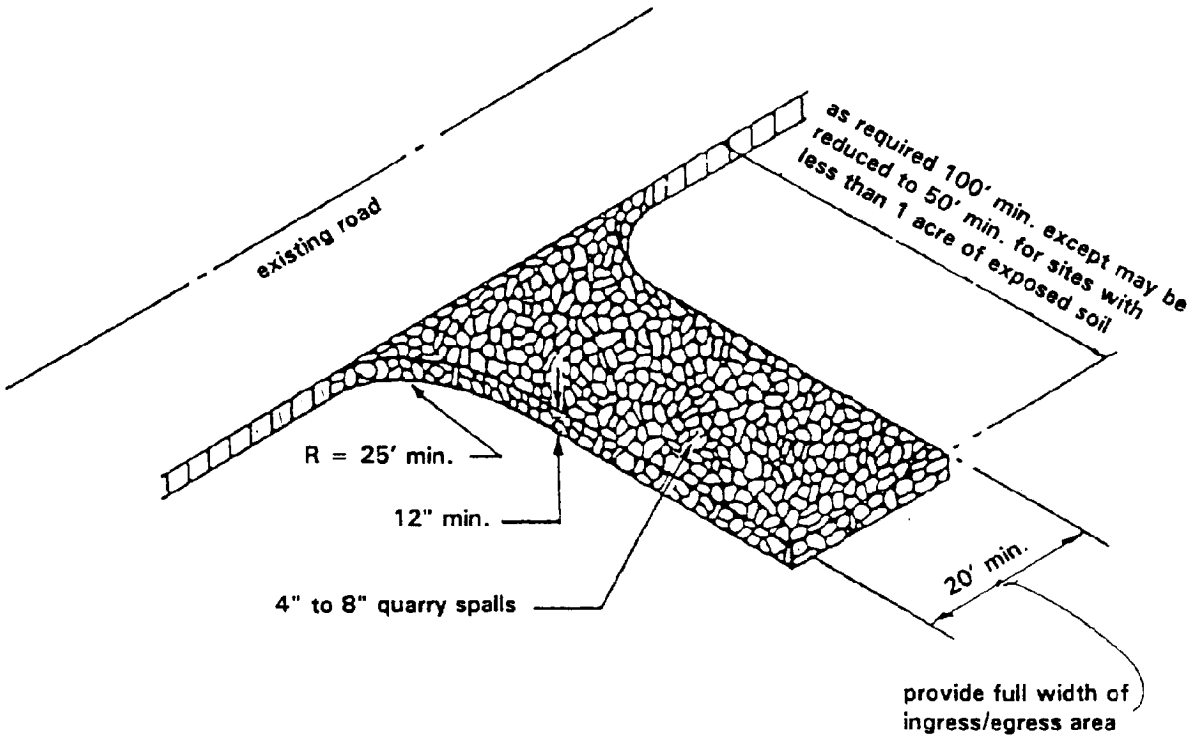

KCSlip4 35271

SEA401816

II-5.8.5 BMP E3.30: Storm Drain Inlet Protection

Code: IP Symbol:

Definition A sediment filter or an excavated impounding area around a storm drain, drop inlet, or curb inlet.

Purpose

To prevent sediment from entering storm drainage systems prior to permanent stabilization of the disturbed area.

Conditions Where Practice Applies

- Where storm drain inlets are to be made operational before permanent stabilization of the disturbed drainage area. Different types of structures are applicable to different conditions:

  a. Filter Fabric Fence - applicable where the inlet drains a relatively small (less than 1 acre) flat area (less than 5 percent slope). (see Figure II-5.23). Do not place fabric under grate as the collected sediment may fall into the drain when the fabric is retrieved. This practice cannot easily be used where the area is paved because of the need for driving stakes to hold the material.

  b. Block and Gravel Filter - applicable where heavy flows (greater than 0.5 cfs) are expected (Figure II-5.24).

  c. Gravel and Wire Mesh Filter - applicable where flows greater than 0.5 cfs are expected and construction traffic may occur over the inlet (Figure II-5.25).

Advantages

- Inlet protection prevents sediment from entering the storm drain system and clogging it.

Disadvantages/Problems

- Sediment removal may be difficult, especially under high flow conditions.

Planning Considerations

Storm sewers which are made operational before their drainage area is stabilized can convey large amounts of sediment to natural drainageways. In cases of extreme sediment loading, the storm sewer itself may clog and lose a major portion of its capacity. To avoid these problems, it is necessary to prevent sediment from entering the system at the inlets.

There are several types of inlet filters and traps which have different applications dependent upon site conditions and type of inlet. Other innovative techniques for accomplishing the same purpose are encouraged, but only after specific plans and details are submitted to and approved by the Plan Approving Authority of the local government (see Design Criteria for the description of a new method currently under development by Emcon Northwest). Note that these various inlet protection devices are for drainage areas of less than one acre. Runoff from larger disturbed areas should be routed through a Temporary Sediment Trap or Pond (see BMPs E3.35, E3.40).

KCSlip4 35272

SEA401817

The best way to prevent sediment from entering the storm sewer system is to stabilize the site as quickly as possible, preventing erosion and stopping sediment at its source.

Design Criteria

- Grates and spaces of all inlets should be secured to prevent seepage of sediment-laden water.

- All inlet protection measures should include sediment sumps of 1 to 2 feet in depth, with 2:1 side slopes (Figure II-5.23).

- Installation procedure for filter fabric fence:

  a. Place 2 inch by 2 inch wooden stakes around the perimeter of the inlet a maximum of 3 feet apart and drive them at least 8 inches into the ground. The stakes must be at least 3 feet long.

  b. Excavate a trench approximately 8 inches wide and 12 inches deep around the outside perimeter of the stakes.

  c. Staple the filter fabric (for materials and specifications, see BMP E3.10, Filter Fence) to wooden stakes so that 32 inches of the fabric extends out and can be formed into the trench. Use heavy-duty wire staples at least ½ inch in length.

  d. Backfill the trench with 3/4 inch or less washed gravel all the way around.

- Installation procedure for block and gravel filter:

  a. Place wire mesh over the drop inlet so that the wire extends a minimum of 1 foot beyond each side of the inlet structure. Use hardware cloth or comparable wire mesh with one-half inch openings. If more than one strip is necessary, overlap the strips. Place filter fabric over the wire mesh.

  b. Place concrete blocks lengthwise on their sides in a single row around the perimeter of the inlet, so that the open ends face outward, not upward. The ends of adjacent blocks should abut. The height of the barrier can be varied, depending on design needs, by stacking combinations of blocks that are 4 inches, 8 inches, and 12 inches wide. The row of blocks should be at least 12 inches but no greater than 24 inches high (Figure II-5.24).

  c. Place wire mesh over the outside vertical face (open end) of the concrete blocks to prevent stone from being washed through the blocks. Use hardware cloth or comparable wire mesh with one half inch openings.

  d. Pile washed stone against the wire mesh to the top of the blocks. Use 3/4 to 3 inch gravel.

- Installation procedure for gravel and wire mesh filter:

  a. Place wire mesh over the drop inlet so that the wire extends a minimum of 1 foot beyond each side of the inlet structure. Use hardware cloth or comparable wire mesh with 1/2 inch openings. If more than one strip of mesh is necessary, overlap the strips. Place filter fabric over wire mesh.

  b. Extend the filter fence/wire mesh beyond the inlet opening at least 18 inches on all sides. Place 3/4 to 3-inch gravel over the filter fabric/wire mesh. The depth of the gravel should be at least 12 inches

KCSlip4 35273

SEA401818

over the entire inlet opening (see Figure II-5.25).

Experimental Inlet Protection BMP:

EMCON Northwest, Inc. has recently developed a catchbasin filter (patent pending) that prevents sediments and other contaminants from entering storm drainage systems. The catchbasin filter is inserted in the catchbasin just below the grating. The catchbasin filter is equipped with a sediment trap and up to three layers of a fiberglass filter material (see Figure II-5.26). This type of system may not be applicable in all catchbasins but would work well at construction sites, industrial facilities, service stations, marinas/boatyards, etc.

During research and development of the catchbasin filter, EMCON Northwest, Inc. has found that particulates as small as 15 microns are retained by the filter. Additionally, high levels of particulate heavy metals, oil and grease and TSS have been removed at both industrial facilities and construction sites. The catchbasin filter is equipped with an overflow mechanism which allows it to pass peak flows up to 240 gallons per minute. Effective filtration can be accomplished at flows as high as 40 gallons per minute.

For further information, contact John MacPherson at EMCON Northwest Inc., (206) 485-5000.

Please note that this information is presented for informational purposes only. While this technology appears to be an effective method of controlling some types of pollutants, Ecology is not in a position to confirm or deny its efficacy at this time.

Maintenance

- For systems using filter fabric: inspections should be made on a regular basis, especially after large storm events. If the fabric becomes clogged, it should be replaced. Sediment should be removed when it reaches approximately one-half the height of the fence. If a sump is used, sediment should be removed when it fills approximately one half the depth of the hole.

- For systems using stone filters: If the stone filter becomes clogged with sediment, the stones must be pulled away from the inlet and cleaned or replaced. Since cleaning of gravel at a construction site may be difficult, an alternative approach would be to use the clogged stone as fill and put fresh stone around the inlet.

- All temporary and permanent erosion and sediment control practices shall be maintained and repaired as needed to assure continued performance of their intended function. All maintenance and repair shall be conducted in accordance with an approved manual.

- All temporary erosion and sediment control measures shall be removed within 30 days after final site stabilization is achieved or after the temporary BMPs are no longer needed. Trapped sediment shall be removed or stabilized on site. Disturbed soil areas resulting from removal shall be permanently stabilized.

KCSlip4 35274

SEA401819

Figure II-5.23 Filter Fabric Fence Inlet Filter

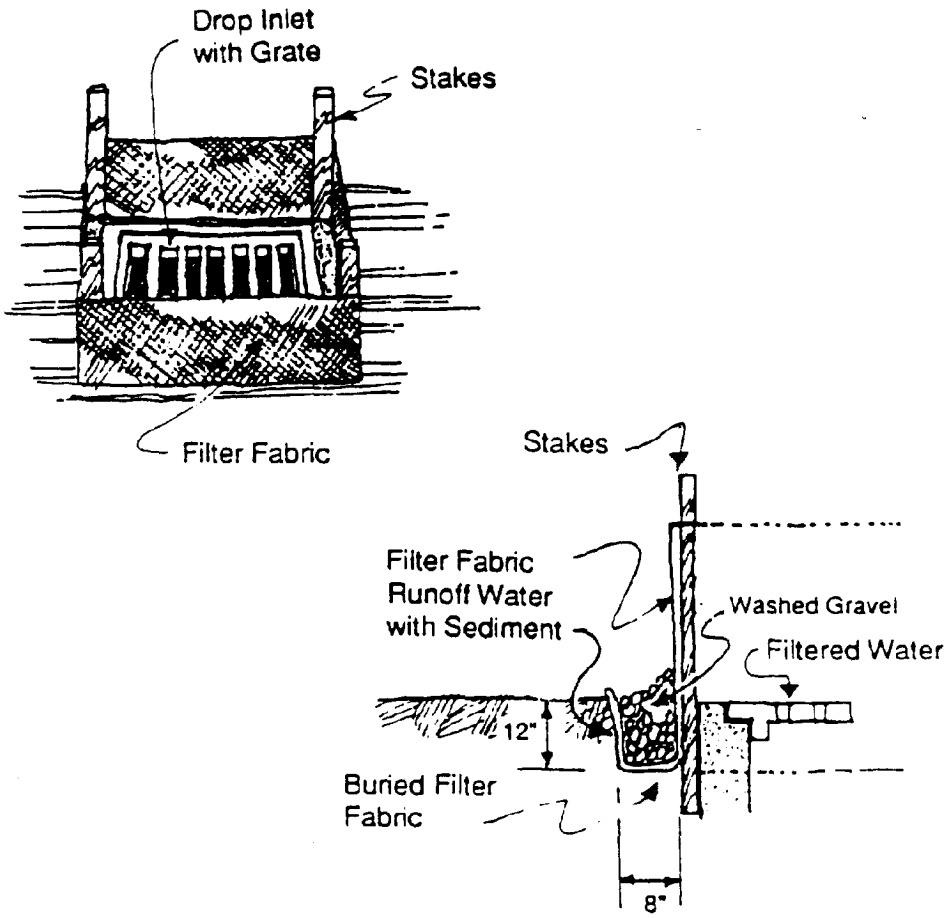

KCSlip4 35275

SEA401820

Figure II-5.24 Block and Gravel Filter

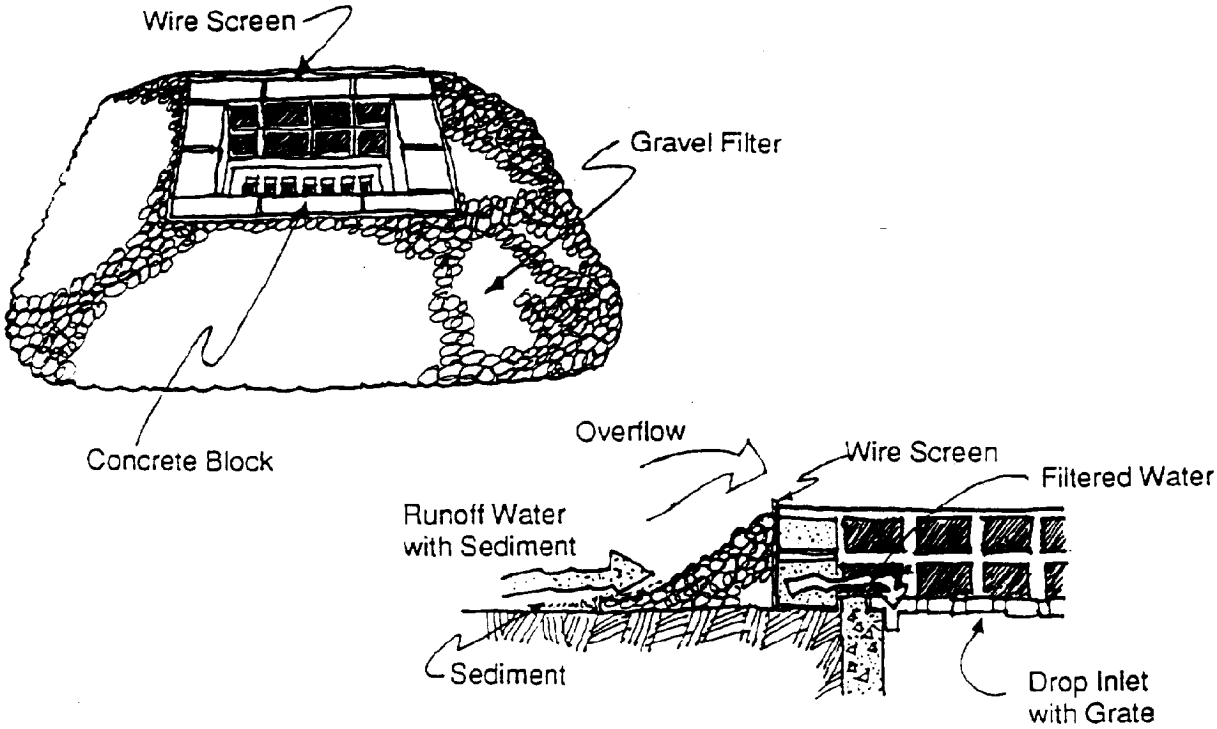

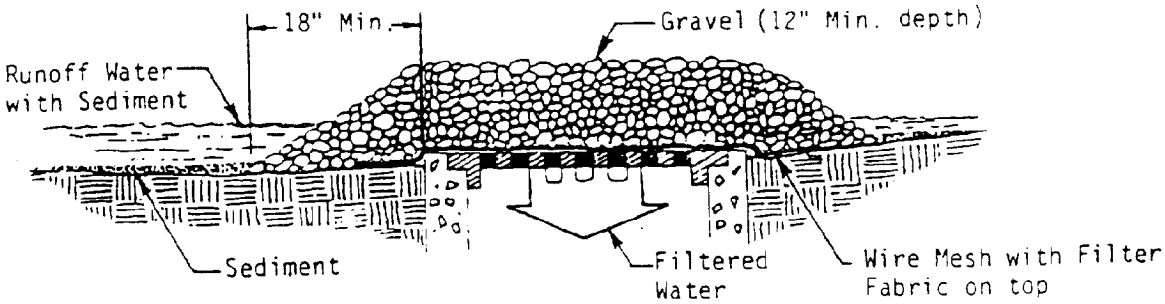

Figure II-5.25 Gravel and Wire Mesh Filter

KCSlip4 35276

SEA401821