EMISSIONS COMPLIANCE STUDY

Performed At The

Elkhart Brass Manufacturing Company, Inc.
Elkhart Foundry
Induction Melt Furnaces (EU29, EU30, and EU31)
Elkhart, Indiana

Test Date

May 11, 2016

Report No.

TRC Environmental Corporation Report 253282A

Report Submittal Date

June 16, 2016

TRC Environmental Corporation
7521 Brush Hill Road
Burr Ridge, Illinois 60527 T (312) 533-2042
USA F (312) 533-2070

Report Certification

I certify that to the best of my knowledge:

- Testing data and all corresponding information have been checked for accuracy and completeness.
- Sampling and analysis have been conducted in accordance with the approved protocol and applicable reference methods (as applicable).
- All deviations, method modifications, or sampling and analytical anomalies are summarized in the appropriate report narrative(s).

Mr. Paul Coleman
Project Manager

June 16, 2016
Date

TRC was operating in conformance with the requirements of ASTM D7036-04 during this test program.

Jeffrey W. Burdette
TRC Air Measurements Technical Director

TABLE OF CONTENTS

1.0 INTRODUCTION 4
1.1 Project Contact Information 4
1.2 Facility and Process Description 5
1.3 Process Data 5

2.0 SUMMARY OF RESULTS 6

3.0 DISCUSSION OF RESULTS 7

4.0 SAMPLING AND ANALYSIS PROCEDURES 7
4.1 Determination of Sample Point Locations by USEPA Method 1 7
4.2 Volumetric Flow Rate Determination by USEPA Method 2 7
4.3 CO_2 and O_2 Determination by USEPA Method 3 8
4.4 Filterable PM Determination by USEPA Method 5 8
4.5 Visible Emissions Determination by USEPA Method 9 8
4.6 Lead Determination by USEPA Method 12 8

5.0 QUALITY ASSURANCE PROCEDURES 9

6.0 TEST RESULTS SUMMARY 10

APPENDIX
AETB and QI Information Summary 18
Qualified Individual Certificate(s) 19
Process Operating Data and Raw Process Data sheets 26
Metal specification for C83600 brass alloy 29
Sample Location Information 30
Sample Train Diagrams 33
Sample Analysis Data 36
Stationary Source Audit Program (SSAP) Audit Results 61
Calculation Nomenclature and Formulas 67
Processed Field Data and Results 73
Processed Visible Emission Data 109
Visible Emission Observer Certificate 118
Sampling Equipment Calibration Data 119
Raw Field Data Sheets 182
Test Protocol 233

EMISSIONS COMPLIANCE STUDY

1.0 INTRODUCTION

TRC Environmental Corporation (TRC) performed a particulate matter (PM), lead (Pb) and visible emissions (VE) compliance test program on the exhaust stacks associated with the Induction Melt Furnaces (EU29, EU30, and EU31) at the foundry of Elkhart Brass Manufacturing Company, Inc. (Elkhart Brass) in Elkhart, Indiana on May 11, 2016. The tests were authorized by and performed for Elkhart Brass.

The purpose of this test program was in response to a Request to Provide Information Pursuant to the Clean Air Act (Request) from the United States Environmental Protection Agency Region 5 (USEPA), dated September 17, 2015. The test program, conducted according to the TRC Test Protocol 253282 dated May 2, 2016, was performed in order to determine particulate, lead and visible emission rates during maximum operating conditions.

1.1 Project Contact Information

Participants		
Test Facility	Elkhart Brass Manufacturing Company, Inc. Elkhart Foundry 1302 West Beardsley Ave. Elkhart, Indiana 46514	Mr. Dennis Grenier 574-970-7666 (phone) 574-274-8950 (cell) dgrenier@elkhartbrass.com
Air Emissions Testing Body (AETB)	TRC Environmental Corporation 2025 Beltline Ave. SE Suite 402 Grand Rapids, MI 49546	Mr. Ben Lemley, PE Project Engineer 201-636-5885 (phone) 616-975-1098 (fax) blemley@trcsolutions.com
	TRC Environmental Corporation 7521 Brush Hill Road Burr Ridge, Illinois 60527	Mr. Paul Coleman Project Manager 312-533-2023 (phone) 312-533-2070 (fax) pcoleman@trcsolutions.com

The tests were conducted by Ben Cacao, Greg Rock, Ricardo Nunez, Johnathan Kell, Rome Rothgeb, Gavin Lewis, Ryan Novosal, Cameron Dillion, Bill Harris and Paul Coleman of TRC. Documentation of the on-site ASTM D7036-04 Qualified Individual(s) (QI) can be located in the appendix to this report.

1.2 Facility and Process Description

Elkhart Brass operates a brass and aluminum firefighting equipment manufacturing source located at 1302 West Beardsley Avenue, Elkhart, Indiana. The source operates under Significant Permit Revision No. M039-30851-00072 to Minor Source Operating Permit (MSOP) No. 039-22655-0072 issued by the Indiana Department of Environmental Management (IDEM) on January 4, 2012. This test program to determine lead, filterable particulate matter and opacity was performed simultaneously at the three (3) exhaust stacks associated with the three Induction Melt Furnaces (EU29, EU30, and EU31).

1.3 Process Data

Appendix B of the Request states that testing was to be conducted while operating the melt furnaces at maximum production rates identified as a minimum of 95% of the capacity of the unit. Per Section D.4(e) of the MSOP Elkhart is permitted to operate three induction melt furnaces (EU29, EU30, and EU31) with a capacity of 2.25 tons per hour each. However, Elkhart generally operates only two of the furnaces at any one time due to limited electrical availability. Further, the maximum operating capability of the furnaces as currently installed, accounting for use of the alloy with the worst case lead content, is estimated to be 1.5 tons per hour each. As planned, during this test program Elkhart operated the melt and mold lines so that the furnaces were not idle at any point and molds would be available to be poured at all times. The table below outlines the production data collected during the test. Scans of original data sheets from the test day are included in the appendix.

Test	Sample Time (min)	Production Rate (lb brass/test)	Production Rate (ton brass/hour)
1	120	7,300	1.83
2	120	9,697	2.42
3	120	10,343	2.59
Average	**120**	**9,113**	**2.28**

Note that all throughput during the test consisted of the proposed worst case alloy, C83600. The specifications for the alloy are included in the appendix.

2.0 SUMMARY OF RESULTS

The results of this test program are summarized in the table below. Detailed individual run results are presented in Section 6.0.

Unit ID	Pollutant Tested	Total Measured Emissions				Permitted Emission Limit[1]
		Run 1	Run 2	Run 3	Average	
Induction Melt Furnaces (EU29, EU30, and EU31)	Filterable PM lb/hour	0.93	1.11	1.12	1.05	14.12
	Filerable PM lb/ton	0.51	0.46	0.43	0.47	---
	Lead lb/hour	0.067	0.062	0.042	0.057	---
	Lead lb/ton	0.037	0.026	0.016	0.026	---

1. Permit limit of 7.06 lb/hr for each furnace listed in MSOP No. 039-22655-0072, accounting for two furnaces operating during testing.

Unit ID	Pollutant Tested	Visible Emission		
		Melt 1 Stack	Melt 2 Stack	Tap Hood Stack
Induction Melt Furnaces (EU29, EU30, and EU31)	Opacity Maximum 6-Minute Average (%)	0.0	0.0	0.0

The table below summarizes the test methods used, as well as the number and duration of each at each test location:

Unit ID/ Sample Location	Emission Point	Parameter Measured	Test Method	No. of Runs	Run Duration (min)
Induction Melt Furnaces (EU29, EU30, and EU31)	Melt 1 Stack, Melt 2 Stack, Tap Hood Stack (sampled simultaneously)	Filerable PM	USEPA 1, 2, 3, and 5, 40CFR60, Appendix A	3	120
		Lead (Pb)	USEPA 12, 40CFR60, Appendix A	3	120
		Visible Emissions	USEPA 9, 40CFR60, Appendix A	3	60

3.0 DISCUSSION OF RESULTS

No problems were encountered with the testing equipment during the test program. Source operation appeared normal during the entire test program. No changes or problems were encountered that required modification of any procedures presented in the test plan. No adverse test or environmental conditions were encountered during the conduct of this test program.

4.0 SAMPLING AND ANALYSIS PROCEDURES

All testing, sampling, analytical, and calibration procedures used for this test program were performed in accordance with the methods presented in the following sections. Where applicable, the Quality Assurance Handbook for Air Pollution Measurement Systems, Volume III, Stationary Source Specific Methods, USEPA 600/R-94/038c, September 1994 was used to supplement procedures.

4.1 Determination of Sample Point Locations by USEPA Method 1

This method is applicable to gas streams flowing in ducts, stacks, and flues and is designed to aid in the representative measurement of pollutant emissions and/or total volumetric flow rates from stationary sources. In order to qualify as an acceptable sample location, it must be located at a position at least two stack or duct equivalent diameters downstream and a half equivalent diameter upstream from any flow disturbance.

The cross-section of the measurement site was divided into a number of equal areas, and the traverse points were then located in the center of these areas. The minimum number of points were determined from Figure 1-1 (particulate) of USEPA Method 1.

4.2 Volumetric Flow Rate Determination by USEPA Method 2

This method is applicable for the determination of the average velocity and the volumetric flow rate of a gas stream.

The gas velocity head (ΔP) and temperature were measured at traverse points defined by USEPA Method 1. The velocity head was measured with a Type S (Stausscheibe or reverse type) pitot tube and oil-filled manometer; and the gas temperature was measured with a Type K thermocouple. The average gas velocity in the flue was calculated based on: the gas density (as determined by USEPA Methods 3 and 4); the flue gas pressure; the average of the square roots of the velocity heads at each traverse point, and the average flue gas temperature.

4.3 CO_2 and O_2 Determination by USEPA Method 3

This method is applicable for the determination of CO_2 and O_2 concentrations and dry molecular weight of a sample from an effluent gas stream of a fossil-fuel combustion process or other process.

Gas samples were extracted from each stack by single-point, grab sampling and the gas samples analyzed for percent CO_2 and percent O_2 using a Fyrite.

4.4 Filterable PM Determination by USEPA Method 5

This method is applicable for the determination of PM emissions from stationary sources. USEPA Methods 2-4 were performed concurrently with, and as an integral part of, these determinations.

Flue gas was withdrawn isokinetically from the source at traverse points determined per USEPA Method 1, and PM was collected in the nozzle, probe liner, and on a glass fiber filter. The probe liner and filter were maintained at a temperature of 120 ± 14°C (248 ± 25°F) or such other temperature as specified by an applicable subpart of the standards or approved by the Administrator for a particular application. The PM mass, which included any material that condensed at or above the filtration temperature, was determined gravimetrically after the removal of uncombined water.

4.5 Visible Emissions Determination by USEPA Method 9

This method is applicable for the determination of the opacity of emissions from stationary sources pursuant to § 60.11(b) and for visually determining opacity of emissions.

Opacity observations were made by a qualified observer. Observations were made at the point of greatest opacity in the portion of the plume where condensed water vapor was not present. Observations were made at 15-second intervals for the duration of the test period.

4.6 Lead Determination by USEPA Method 12

This method is applicable for the determination of inorganic lead (Pb) emissions from stationary sources, only as specified in an applicable subpart of the regulations. USEPA Methods 2-4 were performed concurrently with, and as an integral part of these determinations.

Flue gas was withdrawn isokinetically from each source at traverse points determined per USEPA Method 1. Particle-bound and gaseous Pb were collected in the nozzle, probe liner, filter, and impingers containing a solution of dilute nitric acid. The probe liner and filter were maintained at a temperature of 120 ± 14°C (248 ± 25°F). The

collected samples were digested and analyzed via atomic absorption spectrophotometry using an air/acetylene flame.

5.0 QUALITY ASSURANCE PROCEDURES

TRC integrates our Quality Management System (QMS) into every aspect of our testing service. We follow the procedures specified in current published versions of the test Method(s) referenced in this report. Any modifications or deviations are specifically identified in the body of the report. We routinely participate in independent, third party audits of our activities, and maintain:

- Accreditation from the Louisiana Environmental Laboratory Accreditation Program (LELAP);
- Accreditation from the Stack Testing Accreditation Council (STAC) and the American Association for Laboratory Accreditation (A2LA) that our operations conform with the requirements of ASTM D 7036 as an Air Emission Testing Body (AETB).

These accreditations demonstrate that our systems for training, equipment maintenance and calibration, document control and project management will fully ensure that project objectives are achieved in a timely and efficient manner with a strict commitment to quality.

All calibrations are performed in accordance with the test Method(s) identified in this report. If a Method allows for more than one calibration approach, or if approved alternatives are available, the calibration documentation in the appendices specifies which approach was used. All measurement devices are calibrated or verified at set intervals against standards traceable to the National Institute of Standards and Technology (NIST). NIST traceability information is available upon request.

ASTM D7036-04 specifies that: *"AETBs shall have and shall apply procedures for estimating the uncertainty of measurement. Conformance with this section may be demonstrated by the use of approved test protocols for all tests. When such protocols are used, reference shall be made to published literature, when available, where estimates of uncertainty for test methods may be found."* TRC conforms with this section by using approved test protocols for all tests.

6.0 TEST RESULTS SUMMARY

Elkhart Brass Manufacturing Company, Inc.
Elkhart, Indiana
May 11, 2016

Particulate Test Results Summary

Run #		Run 1	Run 2	Run 3	Average
Time		7:20 - 10:30	11:30 - 13:40	14:40 - 16:55	
Location	Unit				
Melt 1 Stack	lb/hr	0.36	0.40	0.35	0.37
Melt 2 Stack		0.18	0.29	0.29	0.25
Tap Hood Stack		0.39	0.42	0.48	0.43
Total	**lb/hr**	**0.93**	**1.11**	**1.12**	**1.05**
Brass Alloy Throughput	ton/hr	1.83	2.42	2.59	---
Total	**lb/ton**	**0.51**	**0.46**	**0.43**	**0.47**

Lead Test Results Summary

Run #		Run 1	Run 2	Run 3	Average
Time		7:20 - 10:30	11:30 - 13:40	14:40 - 16:55	
Location	Unit				
Melt 1 Stack	lb/hr	0.029	0.023	0.013	0.022
Melt 2 Stack		0.013	0.019	0.014	0.015
Tap Hood Stack		0.026	0.019	0.015	0.020
Total	**lb/hr**	**0.067**	**0.062**	**0.042**	**0.057**
Brass Alloy Throughput	ton/hr	1.83	2.42	2.59	---
Total	**lb/ton**	**0.037**	**0.026**	**0.016**	**0.026**

PARTICULATE TEST RESULTS SUMMARY

Company:	Elkhart Brass
Plant:	Elkhart, IN
Unit:	Melt 1
Location:	Stack

Test Run Number	1	2	3	Average
Source Condition	Normal	Normal	Normal	
Date	5/11/2016	5/11/2016	5/11/2016	
Start Time	7:20	11:30	14:40	
End Time	10:30	13:40	16:55	
Sample Duration (min):	120.0	120.0	120.0	
Average Gas Temp, T_s, (^oF):	74.0	81.4	84.1	79.8
Fractional Gas Moisture Content, B_{ws}:	0.015	0.017	0.020	0.017
Gas CO_2 Content (%vol):	0.0	0.0	0.0	0.0
Gas O_2 Content (%vol):	20.9	20.9	20.9	20.9
Gas Wet MW, M_s, (lb/lbmole-mole):	28.68	28.65	28.62	28.65
Average Gas Velocty, V_s, (ft/sec):	24.70	24.80	24.51	24.67
Measured Volumetric Flow Rate				
Q (actual ft^3/min):	6,281	6,306	6,232	6,273
Q_{std} (std ft^3/min):	6,052	5,990	5,891	5,978
$Q_{std(dry)}$ (dry std ft^3/min):	5,963	5,890	5,773	5,875
Sample Volume, $V_{m(std)}$, (dry std ft^3):	77.348	78.497	76.815	77.553
PM Collected, m_n, (mg):				
Filterable	35.10	40.00	35.10	36.73
PM Concentration, C_s, (gr/dscf):				
Filterable	0.0070	0.0079	0.0071	0.0073
PM Emission Rate, ER_{M2}, (lb/hr based on measured volumetric flow rate):				
Filterable:	0.36	0.40	0.35	0.37
Isokinetic Variance (I)	95.9	98.6	98.4	97.6
Opacity (maximum 6-Min average) (%):	0.0	0.0	0.0	0.0

PARTICULATE TEST RESULTS SUMMARY

Company:	Elkhart Brass
Plant:	Elkhart, IN
Unit:	Melt 2
Location:	Stack

Test Run Number	1	2	3	Average
Source Condition	Normal	Normal	Normal	
Date	5/11/2016	5/11/2016	5/11/2016	
Start Time	7:20	11:30	14:40	
End Time	10:30	13:40	16:55	
Sample Duration (min):	120.0	120.0	120.0	
Average Gas Temp, T_s, (^oF):	71.6	80.3	82.0	78.0
Fractional Gas Moisture Content, B_{ws}:	0.011	0.011	0.012	0.011
Gas CO_2 Content (%vol):	0.0	0.0	0.0	0.0
Gas O_2 Content (%vol):	20.9	20.9	20.9	20.9
Gas Wet MW, M_s, (lb/lbmole-mole):	28.71	28.72	28.71	28.71
Average Gas Velocty, V_s, (ft/sec):	27.23	29.07	28.73	28.34
Measured Volumetric Flow Rate				
Q (actual ft^3/min):	6,925	7,391	7,306	7,207
Q_{std} (std ft^3/min):	6,703	7,045	6,942	6,897
$Q_{std(dry)}$ (dry std ft^3/min):	6,628	6,968	6,861	6,819
Sample Volume, $V_{m(std)}$, (dry std ft^3):	93.986	98.651	97.202	96.613
PM Collected, m_n, (mg):				
Filterable	19.80	30.90	30.70	27.13
PM Concentration, C_s, (gr/dscf):				
Filterable	0.0033	0.0048	0.0049	0.0043
PM Emission Rate, ER_{M2}, (lb/hr based on measured volumetric flow rate):				
Filterable:	0.18	0.29	0.29	0.25
Isokinetic Variance (I)	103.5	103.3	103.4	103.4
Opacity (maximum 6-Min average) (%):	0.0	0.0	0.0	0.0

PARTICULATE TEST RESULTS SUMMARY

Company:	Elkhart Brass
Plant:	Elkhart, IN
Unit:	Tap Hood
Location:	Stack

Test Run Number	1	2	3	Average
Source Condition	Normal	Normal	Normal	
Date	5/11/2016	5/11/2016	5/11/2016	
Start Time	7:20	11:30	14:40	
End Time	10:30	13:40	16:55	
Sample Duration (min):	120.0	120.0	120.0	
Average Gas Temp, T_s, (^oF):	74.8	78.8	82.5	78.7
Fractional Gas Moisture Content, B_{ws}:	0.016	0.014	0.013	0.014
Gas CO_2 Content (%vol):	0.0	0.0	0.0	0.0
Gas O_2 Content (%vol):	20.9	20.9	20.9	20.9
Gas Wet MW, M_s, (lb/lbmole-mole):	28.67	28.68	28.69	28.68
Average Gas Velocty, V_s, (ft/sec):	29.78	30.18	30.12	30.02
Measured Volumetric Flow Rate				
Q (actual ft^3/min):	8,770	8,888	8,870	8,843
Q_{std} (std ft^3/min):	8,439	8,497	8,422	8,452
$Q_{std(dry)}$ (dry std ft^3/min):	8,308	8,374	8,311	8,331
Sample Volume, $V_{m(std)}$, (dry std ft^3):	80.327	80.998	80.244	80.523
PM Collected, m_n, (mg):				
Filterable	28.70	30.70	34.80	31.40
PM Concentration, C_s, (gr/dscf):				
Filterable	0.0055	0.0058	0.0067	0.0060
PM Emission Rate, ER_{M2}, (lb/hr based on measured volumetric flow rate):				
Filterable:	0.39	0.42	0.48	0.43
Isokinetic Variance (I)	101.0	101.1	100.9	101.0
Opacity (maximum 6-Min average) (%):	0.0	0.0	0.0	0.0

Method 12 Lead Test Results Summary

Company:	**Elkhart Brass**
Plant:	**Elkhart, IN**
Unit:	**Melt 1**
Location:	**Stack**

Run No:	1	2	3	Average
Date:	5/11/16	5/11/16	5/11/16	
Start Time:	7:20	11:30	14:40	
End Time:	10:30	13:40	16:55	
Run Duration (min):	120.0	120.0	120.0	
Fixed Gas Content:				
CO_2 (% vol)	0.0	0.0	0.0	0.0
O_2 (% vol)	20.9	20.9	20.9	20.9
Fractional Moisture Content:	0.014	0.016	0.019	0.016
Sample Volume (V_{mStd})				
(dry std ft^3):	81.006	81.834	80.266	81.035
Measured Volumetric Flow Rate				
Q_{std} (std ft^3/min):	6,063	6,086	5,982	6,044
$Q_{std(dry)}$ (dry std ft^3/min):	5,977	5,989	5,867	5,944
Net Mass Collected (µg)				
Lead:	2924.8	2414.8	1344.8	2228.1 ADL
Metals Concentration (lb/dscf)				
Lead:	7.96E-08	6.51E-08	3.69E-08	6.05E-08 ADL
Metals Emission Rate (lb/hr)				
Lead:	0.029	0.023	0.013	0.022 ADL
Isokinetic Variation (%):	98.9	99.7	99.8	99.5

ADL - all analytical values used to calculate and report an in-stack emissions value are greater than the laboratory's reported detection level(s)

Method 12 Lead Test Results Summary

Company:	**Elkhart Brass**
Plant:	**Elkhart, IN**
Unit:	**Melt 2**
Location:	**Stack**

Run No:	1	2	3	Average
Date:	5/11/16	5/11/16	5/11/16	
Start Time:	7:20	11:30	14:40	
End Time:	10:30	13:40	16:55	
Run Duration (min):	120.0	120.0	120.0	
Fixed Gas Content:				
CO_2 (% vol)	0.0	0.0	0.0	0.0
O_2 (% vol)	20.9	20.9	20.9	20.9
Fractional Moisture Content:	0.018	0.019	0.019	0.018
Sample Volume (V_{mStd})				
(dry std ft^3):	92.580	93.275	94.531	93.462
Measured Volumetric Flow Rate				
Q_{std} (std ft^3/min):	6,927	6,924	7,007	6,953
$Q_{std(dry)}$ (dry std ft^3/min):	6,805	6,792	6,877	6,825
Net Mass Collected (µg)				
Lead:	1314.8	1984.8	1454.8	1584.8 ADL
Metals Concentration (lb/dscf)				
Lead:	3.13E-08	4.69E-08	3.39E-08	3.74E-08 ADL
Metals Emission Rate (lb/hr)				
Lead:	0.0128	0.0191	0.0140	0.0153 ADL
Isokinetic Variation (%):	97.9	98.9	99.0	98.6

ADL - all analytical values used to calculate and report an in-stack emissions value are greater than the laboratory's reported detection level(s)

Method 12 Lead Test Results Summary

Company:	**Elkhart Brass**
Plant:	**Elkhart, IN**
Unit:	**Tap Hood**
Location:	**Stack**

Run No:	1	2	3	Average
Date:	5/11/16	5/11/16	5/11/16	
Start Time:	7:20	11:30	14:40	
End Time:	10:30	13:40	16:55	
Run Duration (min):	120.0	120.0	120.0	
Fixed Gas Content:				
CO_2 (% vol)	0.0	0.0	0.0	0.0
O_2 (% vol)	20.9	20.9	20.9	20.9
Fractional Moisture Content:	0.017	0.019	0.019	0.018
Sample Volume (V_{mStd})				
(dry std ft^3):	83.905	84.219	83.040	83.721
Measured Volumetric Flow Rate				
Q_{std} (std ft^3/min):	8,672	8,727	8,606	8,668
$Q_{std(dry)}$ (dry std ft^3/min):	8,526	8,562	8,443	8,510
Net Mass Collected (µg)				
Lead:	1944.8	1434.8	1114.8	1498.1 ADL
Metals Concentration (lb/dscf)				
Lead:	5.11E-08	3.76E-08	2.96E-08	3.94E-08 ADL
Metals Emission Rate (lb/hr)				
Lead:	0.0261	0.0193	0.0150	0.0201 ADL
Isokinetic Variation (%):	99.8	99.8	99.8	99.8

ADL - all analytical values used to calculate and report an in-stack emissions value are greater than the laboratory's reported detection level(s)

APPENDIX

AETB and QI Information Summary

Facility Name:	Elkhart Brass
Location:	Induction Melt Furnaces (EU29, EU30, EU31)
Test Date:	May 11, 2016

Test Parameters:	Methods 1, 2, 3, 5	Methods 1, 2, 3, 5	Methods 1, 2, 3, 5
QI Last Name:	Coleman	Cacao	Harris
QI First Name:	Paul	Ben	William
QI Middle Initial:	F.	---	---
AETB Name:	TRC Environmental Corporation	TRC Environmental Corporation	TRC Environmental Corporation
AETB Phone No:	312-533-2023	630-280-9068	919-985-1332
AETB Email:	pcoleman@trcsolutions.com	bcacao@trcsolutions.com	wharris@trcsolutions.com
Group 1 Exam Date:	1-23-13	2-27-2015	3-10-2016
Provider Name:	Source Evaluation Society	Source Evaluation Society	Source Evaluation Society
Provider Email:	qstiprogram@gmail.com.	qstiprogram@gmail.com.	qstiprogram@gmail.com.

Test Parameters:	Methods 1, 2, 3, 5, and 12	Methods 1, 2, 3, 5, and 12
QI Last Name:	Lewis	Rock
QI First Name:	Gavin	Gregory
QI Middle Initial:	---	J.
AETB Name:	TRC Environmental Corporation	TRC Environmental Corporation
AETB Phone No:	219-613-0163	262-960-3379
AETB Email:	glewis@trcsolutions.com	grock@trcsolutions.com
Group 1 Exam Date:	1-3-2013	12-21-2012
Provider Name:	Source Evaluation Society	Source Evaluation Society
Provider Email:	qstiprogram@gmail.com.	qstiprogram@gmail.com.
Group 4 Exam Date:	10-28-2011	1-12-2016
Provider Name:	Source Evaluation Society	Source Evaluation Society
Provider Email:	qstiprogram@gmail.com.	qstiprogram@gmail.com.

This is to Certify that:

Paul F. Coleman

Is a Qualified Individual as defined in Section 8.3 of ASTM D7036-04 for the following test methods:

EPA Methods 1, 1A, 2, 2A, 2C, 2D, 2F, 2G, 2H, 3, 3B, 4, 5, 5A, 5B, 5E, 5F, 5i, 17, 19, 201A, and 202.

The individual has met the minimum experience requirements defined in Section 8.3.4.2 of ASTM D7036-04 and has successfully passed an internal comprehensive examination for the test methods designated above.

This certification is effective until: **01-23-2018**

Edward J MacKinnon

Air Measurements Practice Quality Director

Date of Issue: 02-13-2013

Certificate Number: 00443

TRC

This is to Certify that:

Ben Cacao

Is a Qualified Individual as defined in Section 8.3 of ASTM D7036-04 for the following test methods:

EPA Methods 1, 1A, 2, 2A, 2C, 2D, 2F, 2G, 2H, 3, 3B, 4, 5, 5A, 5B, 5D, 5E, 5F, 5i, 17, 19, 201A, and 202.

The individual has met the minimum experience requirements defined in Section 8.3.4.2 of ASTM D7036-04 and has successfully passed a comprehensive examination for the test methods designated above.

This certification is effective until: **02-27-2020**

Edward J MacKinnon

Air Measurements Practice Quality Manager

Date of Issue: 03-09-2015

Certificate Number: 00761

TRC

This certificate is the exclusive property of TRC and is non-transferable.

This is to Certify that:

William Harris

Is a Qualified Individual as defined in Section 8.3 of ASTM D7036-04 for the following test methods:

EPA Methods 1, 1A, 2, 2A, 2C, 2D, 2F, 2G, 2H, 3, 3B, 4, 5, 5A, 5B, 5D, 5E, 5F, 5i, 17, 19, 201A, and 202.

The individual has met the minimum experience requirements defined in Section 8.3.4.2 of ASTM D7036-04 and has successfully passed a comprehensive examination for the test methods designated above.

This certification is effective until: **03-10-2021**

Edward J MacKinnon

Air Measurements Practice Quality Manager

Date of Issue: 03-23-2016

Certificate Number: 00960

TRC

This certificate is the exclusive property of TRC and is non-transferable.

This is to Certify that:

Gavin Lewis

Is a Qualified Individual as defined in Section 8.3 of ASTM D7036-04 for the following test methods:

EPA Methods 1, 1A, 2, 2A, 2C, 2D, 2F, 2G, 2H, 3, 3B, 4, 5, 5A, 5B, 5E, 5F, 5i, 17, 19, 201A, and 202.

The individual has met the minimum experience requirements defined in Section 8.3.4.2 of ASTM D7036-04 and has successfully passed an internal comprehensive examination for the test methods designated above.

This certification is effective until: **01-03-2018**

Edward J MacKinnon

Air Measurements Practice Quality Director

Date of Issue: 02-13-2013

Certificate Number: 00456

TRC

This is to Certify that:

Gavin Lewis

Is a Qualified Individual as defined in Section 8.3 of ASTM D7036-04 for the following test methods:

EPA Methods 1, 2, 3, 4, 12, 19, 29, 30B, 101, 101A, 102, and ASTM D6784-02.

The individual has met the minimum experience requirements defined in Section 8.3.4.2 of ASTM D7036-04 and has successfully passed an internal comprehensive examination for the test methods designated above.

This certification is effective until: **10-28-2016**

Date of Issue: 02-13-2013

Certificate Number: 00459

Edward J MacKinnon

Air Measurements Practice Quality Director

TRC

This is to Certify that:

Gregory J. Rock

Is a Qualified Individual as defined in Section 8.3 of ASTM D7036-04 for the following test methods:

EPA Methods 1, 1A, 2, 2A, 2C, 2D, 2F, 2G, 2H, 3, 3B, 4, 5, 5A, 5B, 5E, 5F, 5i, 17, 19, 201A, and 202.

The individual has met the minimum experience requirements defined in Section 8.3.4.2 of ASTM D7036-04 and has successfully passed an internal comprehensive examination for the test methods designated above.

This certification is effective until: **12-21-2017**

Date of Issue: 02-13-2013

Certificate Number: 00478

Edward J MacKinnon

Air Measurements Practice Quality Director

TRC

This is to Certify that:

Gregory Rock

Is a Qualified Individual as defined in Section 8.3 of ASTM D7036-04 for the following test methods:

EPA Methods 1, 2, 3, 4, 12, 19, 29, 30B, 101, 101A, 102, and ASTM D6784-02.

The individual has met the minimum experience requirements defined in Section 8.3.4.2 of ASTM D7036-04 and has successfully passed a comprehensive examination for the test methods designated above.

This certification is effective until: **01-12-2021**

Edward J MacKinnon

Air Measurements Practice Quality Manager

Date of Issue: 02-01-2016

Certificate Number: 00909

TRC

This certificate is the exclusive property of TRC and is non-transferable.

Shah, Varsha

From: Lemley, Benjamin
Sent: Wednesday, June 01, 2016 11:33 PM
To: Coleman, Paul; Stromberger, Martin
Cc: Shah, Varsha; McGuire, Kelli
Subject: RE: Elkhart Stack Testing Details

Hi Paul,

The throughput data collected during the test is summarized below. This represents the total throughput for two furnaces running a single lead bearing brass alloy. Please let me know if you need anything else.

	Brass Alloy Throughput	
Test	lb/test	ton/hr
Test 1	7300	1.83
Test 2	9697	2.42
Test 2	10343	2.59

* Assumes 2 hour tests

Thanks,

Ben

Ben Lemley, PE (MI)
Project Engineer

2025 E. Beltline Ave. SE Ste. 402 Grand Rapids, MI 49546
T: 201.636.5885 | F: 616.975.1098 | C: 616.304.7639
blemley@trcsolutions.com
Follow us on LinkedIn or Twitter | www.trcsolutions.com

From: Coleman, Paul
Sent: Thursday, June 02, 2016 1:05 AM
To: Stromberger, Martin <MStromberger@trcsolutions.com>; Lemley, Benjamin <BLemley@trcsolutions.com>
Cc: Shah, Varsha <VShah@trcsolutions.com>; McGuire, Kelli <KMcGuire@trcsolutions.com>
Subject: RE: Elkhart Stack Testing Details

Marty,

Attached are the draft lead results for Elkhart Brass. If results need to be presented as mass per ton brass and aluminum charged, please forward production data, and we will incorporate into the results table.

TEST #2

#1	#3
290	1114
2466	564
1459	1725
152	1527
4,767	4,930

9,697

4.85

2.42/HR.

1ST TEST

#1	#3
4193	~~709~~ 3107

1.825/HR

3RD TEST

1	3
1033	~~105~~
2615	870
1753	1231
	1289
	1552
5,401	4,942

10,343

5.17

2.59

SCHUMANN

Certificate of Analysis

Sold To: ELKHART BRASS MFG. CO. INC.

Order No.: P119750-00

Ship To: ELKHART BRASS MFG. CO. INC.

Shipment Date: 04/20/16

Heat No.: 76654

Alloy: C83600/115 INGOT PN31085100

Comments

Element	Percentage	
COPPER	84.17	BALANCE
TIN	4.35	
LEAD	5.23	
ZINC	5.78	
NICKEL	0.29	
IRON	0.09	
ANTIMONY	0.05	
PHOSPHORUS	0.01	
SULFUR	0.027	
SILICON	Less than .005	
ALUMINUM	Less than .005	
MANGANESE		

Michael Moskowitz
Laboratory Manager
Dennis Granier

TRC

Sample Location Information for Isokinetic Sampling - Round Ducts

Project #: 253282
Company: Elkhart Brass
Plant: Elkhart, IN
Unit ID: Melt 1
Sample Location: Stack

Distance A: 2.50 Feet, 1.08 Duct diameters
Distance B: 9.83 Feet, 4.23 Duct diameters
Meets Method 1 criteria

Duct Diameter: 28 inches 2.32 feet
# of Ports Used: 2
# of Points/Diameter: 12
Sample Plane: Horizontal
Port Type: Other
Port Length: 6.1 inches
Port Inside Diameter: 5.0 inches

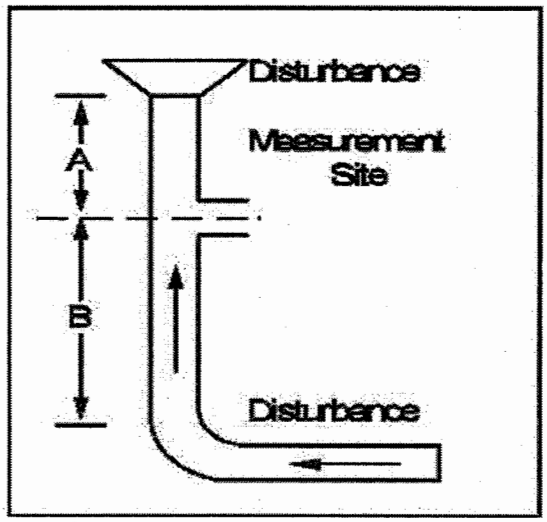

Traverse Point Locations

Point	% of diameter	Inches from wall	Inches from port edge
1	2.1	1.0 *	7.1
2	6.7	1.9	8.0
3	11.8	3.3	9.4
4	17.7	4.9	11.0
5	25.0	7.0	13.1
6	35.6	9.9	16.0
7	64.4	18.0	24.1
8	75.0	20.9	27.0
9	82.3	22.9	29.0
10	88.2	24.6	30.7
11	93.3	26.0	32.1
12	97.9	26.9 *	33.0

* Values have been relocated per EPA M1

Pre-cyclonic flow check conducted? Yes

Pre-Test Cyclonic Flow Check Data

	Port: - 1			Port: - 2			Port:			Port:		
	ΔP	T_s	a	ΔP	T_s	a	ΔP	T_s	a	ΔP	T_s	a
Point #	("H2O)	(°F)	(°)	("H2O)	(°F)	(°)	("H2O)	(°F)	(°)	("H2O)	(°F)	(°)
1	0.18	70	5	0.17	70	0	-	-	-	-	-	-
2	0.19	71	3	0.18	70	5	-	-	-	-	-	-
3	0.18	71	0	0.17	70	10	-	-	-	-	-	-
4	0.15	71	0	0.14	70	10	-	-	-	-	-	-
5	0.15	71	2	0.21	70	6	-	-	-	-	-	-
6	0.22	70	0	0.24	70	5	-	-	-	-	-	-
7	0.21	70	0	0.21	69	0	-	-	-	-	-	-
8	0.18	69	2	0.15	68	0	-	-	-	-	-	-

Average a: 3.0 (°) Average Ts: 70 (°F) Average ΔP: 0.1831 ("H2O)
Status: Pass Avg of sqrt ΔP: 0.4267

© 2016 TRC Environmental Corp.

AM-EMT-15 Rev. 35.4
1/6/2016

TRC

Sample Location Information for Isokinetic Sampling - Round Ducts

Project #: 253282
Company: Elkhart Brass
Plant: Elkhart, IN
Unit ID: Melt 2
Sample Location: Stack

Distance A: 2.50 Feet, 1.08 Duct diameters
Distance B: 9.83 Feet, 4.23 Duct diameters
Meets Method 1 criteria

Duct Diameter: 28 inches 2.32 feet
# of Ports Used: 2
# of Points/Diameter: 12
Sample Plane: Horizontal
Port Type: Other
Port Length: 6.1 inches
Port Inside Diameter: 5.0 inches

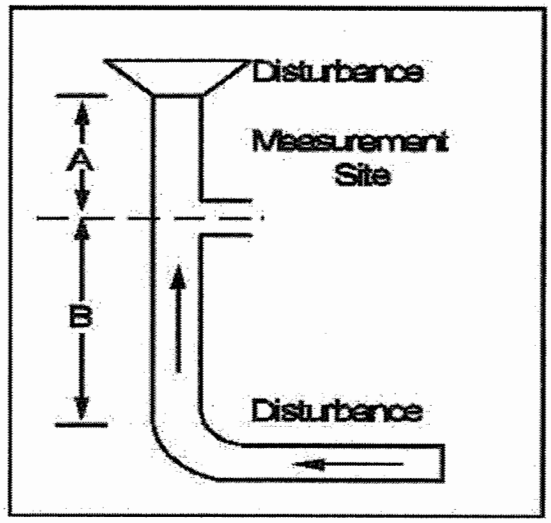

Traverse Point Locations

Point	% of diameter	Inches from wall	Inches from port edge
1	2.1	1.0 *	7.1
2	6.7	1.9	8.0
3	11.8	3.3	9.4
4	17.7	4.9	11.0
5	25.0	7.0	13.1
6	35.6	9.9	16.0
7	64.4	18.0	24.1
8	75.0	20.9	27.0
9	82.3	22.9	29.0
10	88.2	24.6	30.7
11	93.3	26.0	32.1
12	97.9	26.9 *	33.0

* Values have been relocated per EPA M1

Pre-cyclonic flow check conducted? Yes

Pre-Test Cyclonic Flow Check Data

	Port: - 1			Port: - 2			Port:			Port:		
	ΔP	T_s	a	ΔP	T_s	a	ΔP	T_s	a	ΔP	T_s	a
Point #	("H2O)	(°F)	(°)	("H2O)	(°F)	(°)	("H2O)	(°F)	(°)	("H2O)	(°F)	(°)
1	0.30	72	0	0.23	72	3	-	-	-	-	-	-
2	0.32	73	3	0.28	72	3	-	-	-	-	-	-
3	0.32	73	0	0.29	71	0	-	-	-	-	-	-
4	0.29	73	0	0.26	68	0	-	-	-	-	-	-
5	0.18	73	0	0.22	68	0	-	-	-	-	-	-
6	0.15	72	0	0.20	67	0	-	-	-	-	-	-
7	0.12	72	0	0.18	67	0	-	-	-	-	-	-
8	0.07	73	0	0.06	65	0	-	-	-	-	-	-

Average a: 0.6 (°) Average Ts: 70.688 (°F) Average ΔP: 0.2169 ("H2O)
Status: Pass Avg of sqrt ΔP: 0.4552

© 2016 TRC Environmental Corp.

AM-EMT-15 Rev. 35.4
1/6/2016

TRC

Sample Location Information for Isokinetic Sampling - Round Ducts

Project #: 253282
Company: Elkhart Brass
Plant: Elkhart, IN
Unit ID: Tap Hood
Sample Location: Stack

Distance A: 2.50 Feet, 1.00 Duct diameters
Distance B: 10.50 Feet, 4.20 Duct diameters
Meets Method 1 criteria

Duct Diameter: 30 inches 2.50 feet
# of Ports Used: 2
# of Points/Diameter: 12
Sample Plane: Horizontal
Port Type: Nipple
Port Length: 6.0 inches
Port Inside Diameter: 5.0 inches

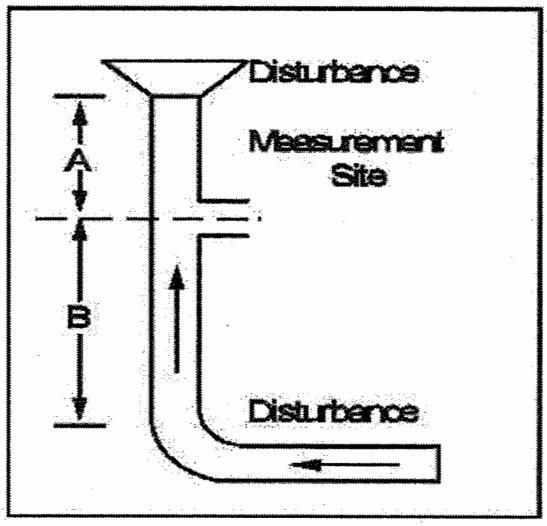

Traverse Point Locations

Point	% of diameter	Inches from wall	Inches from port edge
1	2.1	1.0 *	7.0
2	6.7	2.0	8.0
3	11.8	3.5	9.5
4	17.7	5.3	11.3
5	25.0	7.5	13.5
6	35.6	10.7	16.7
7	64.4	19.3	25.3
8	75.0	22.5	28.5
9	82.3	24.7	30.7
10	88.2	26.5	32.5
11	93.3	28.0	34.0
12	97.9	29.0 *	35.0

* Values have been relocated per EPA M1

Pre-cyclonic flow check conducted? Yes

Pre-Test Cyclonic Flow Check Data

	Port: - 1			Port: - 2			Port:			Port:		
	ΔP	T_s	a	ΔP	T_s	a	ΔP	T_s	a	ΔP	T_s	a
Point #	("H2O)	(°F)	(°)	("H2O)	(°F)	(°)	("H2O)	(°F)	(°)	("H2O)	(°F)	(°)
1	0.25	71	0	0.23	71	3	-	-	-	-	-	-
2	0.27	71	2	0.26	71	0	-	-	-	-	-	-
3	0.29	71	0	0.27	71	0	-	-	-	-	-	-
4	0.23	71	2	0.26	71	0	-	-	-	-	-	-
5	0.23	71	5	0.23	71	0	-	-	-	-	-	-
6	0.27	70	0	0.23	71	0	-	-	-	-	-	-
7	0.32	71	0	0.23	70	0	-	-	-	-	-	-
8	0.29	71	4	0.24	70	0	-	-	-	-	-	-

Average a: 1.0 (°) Average Ts: 70.813 (°F) Average ΔP: 0.2563 ("H2O)
Status: Pass Avg of sqrt ΔP: 0.5055

© 2016 TRC Environmental Corp.

AM-EMT-15 Rev. 35.4
1/6/2016

Determination of Stack Gas Velocity and Volumetric Flow Rate

USEPA Promulgated Test Method 2

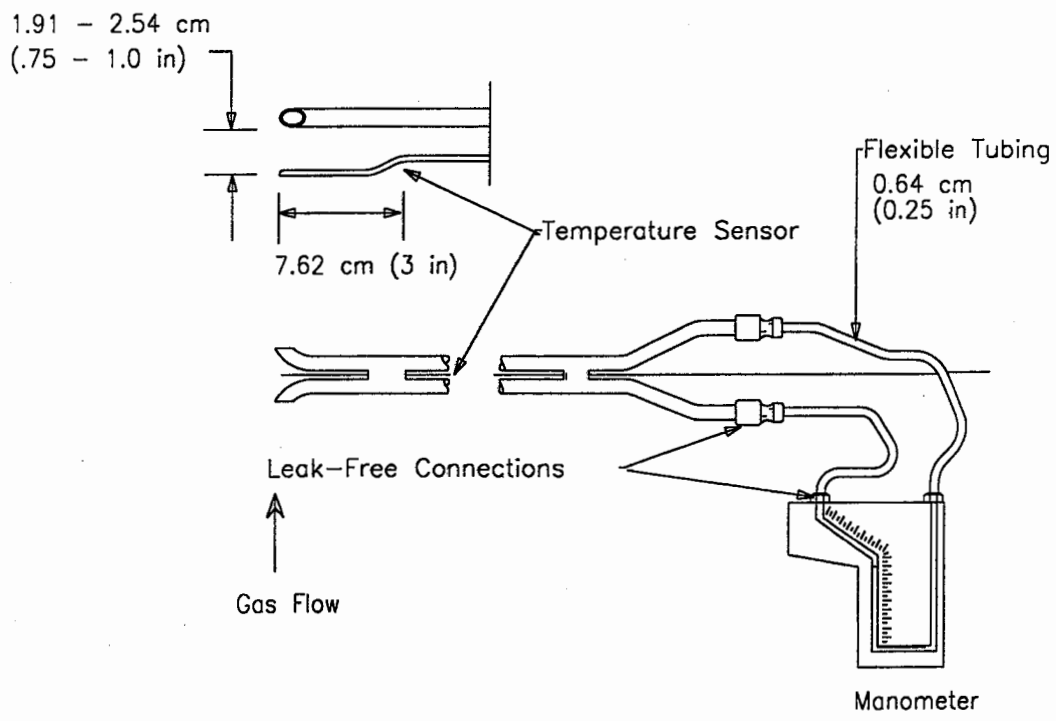

©2013 TRC Environmental Corp. TRC-DWG-PTM-002 Rev. 02/05/2013

Gas Analysis for the Determination of Dry Molecular Weight

USEPA Promulgated Method 3

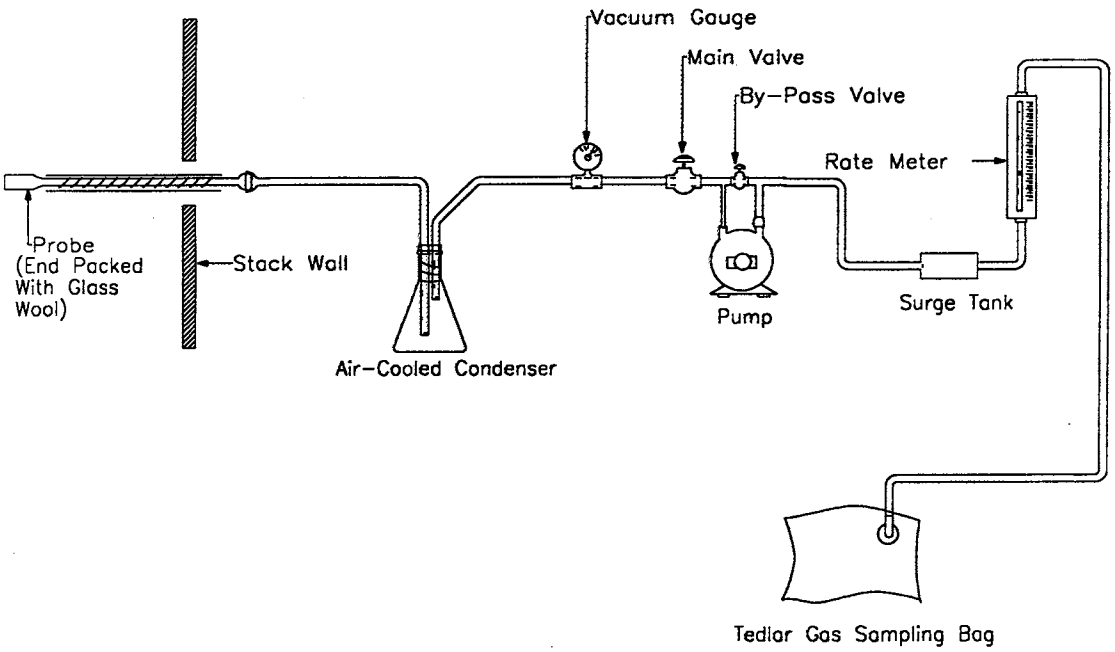

©2013 TRC Environmental Corp. TRC-DWG-PTM-003 Rev. 02/06/2013

Determination of Particulate Emissions From Stationary Sources

USEPA Promulgated Method 5

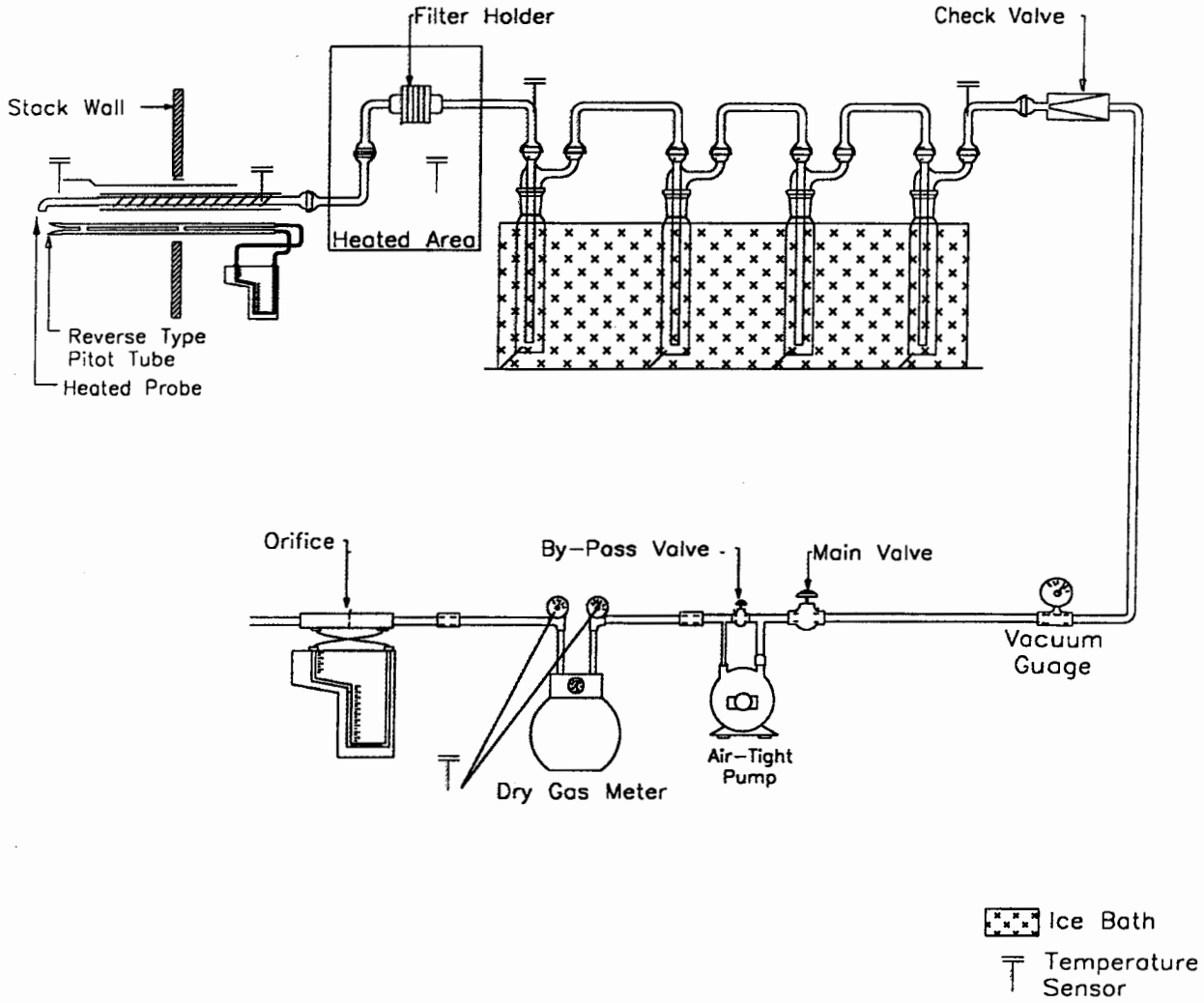

©2013 TRC Environmental Corp. TRC-DWG-PTM-005 Rev. 02/06/2013

Filterable Particulate Sample Analysis Summary

Project#:	253282	Unit ID:	Melt 1
Company:	Elkhart Brass	Location:	Stack
Plant:	Elkhart, IN	Test Date(s):	5/11/2016

Filterable PM	Run 1	Run 2	Run 3	Blank
Total filter weight gain (milligrams):	31.50	34.10	26.50	
Acetone rinse volume, V_{aw}, (ml):	54.0	67.0	51.0	195.0
Acetone rinse weight gain, m_a, (milligrams):	3.60	5.90	8.60	0.0
Applied acetone blank, W_a, (mg)	0.00	0.00	0.00	
Net acetone rinse mass (milligrams):	3.60	5.90	8.60	
Total Filterable PM, m_n, (milligrams):	**35.10**	**40.00**	**35.10**	

© 2016 TRC Environmental Corp.

AM-EMT-15 Rev. 35.4
1/6/2016

Filterable Particulate Sample Analysis Summary

Project#:	**253282**	Unit ID:	**Melt 2**
Company:	**Elkhart Brass**	Location:	**Stack**
Plant:	**Elkhart, IN**	Test Date(s):	**5/11/2016**

Filterable PM	Run 1	Run 2	Run 3	Blank
Total filter weight gain (milligrams):	17.10	27.60	26.60	
Acetone rinse volume, V_{aw}, (ml):	58.0	50.0	43.0	195.0
Acetone rinse weight gain, m_a, (milligrams):	2.70	3.30	4.10	0.0
Applied acetone blank, W_a, (mg)	0.00	0.00	0.00	
Net acetone rinse mass (milligrams):	2.70	3.30	4.10	
Total Filterable PM, m_n, (milligrams):	**19.80**	**30.90**	**30.70**	

© 2016 TRC Environmental Corp.

AM-EMT-15 Rev. 35.4
1/6/2016

Filterable Particulate Sample Analysis Summary

Project#:	**253282**	Unit ID:	**Tap Hood**
Company:	**Elkhart Brass**	Location:	**Stack**
Plant:	**Elkhart, IN**	Test Date(s):	**5/11/2016**

Filterable PM	Run 1	Run 2	Run 3	Blank
Total filter weight gain (milligrams):	18.50	22.00	22.50	
Acetone rinse volume, V_{aw}, (ml):	69.0	52.0	52.0	195.0
Acetone rinse weight gain, m_a, (milligrams):	10.20	8.70	12.30	0.0
Applied acetone blank, W_a, (mg)	0.00	0.00	0.00	
Net acetone rinse mass (milligrams):	10.20	8.70	12.30	
Total Filterable PM, m_n, (milligrams):	**28.70**	**30.70**	**34.80**	

© 2016 TRC Environmental Corp.

AM-EMT-15 Rev. 35.4
1/6/2016

7521 Brush Hill Rd
Burr Ridge, IL 60527

312.533.2042 PHONE
312.533.2070 FAX

www.trcsolutions.com

Laboratory Analysis Report

Case Narrative

General Information

TRC Client Office:	**Burr Ridge**
Company:	Elkhart Brass
Facility:	Elkhart Foundry
Project #:	253282
Analysis Date(s):	5/13-18/2016
Analyst:	Gayle Swanson

Analysis

Analytes:	Particulate Matter
Analytical Protocols:	EPA Method 5
TRC SOP:	AM-P60-5, AM-P60-5L

Analytical Notes:	No problems were encountered during the analyses.
QA/QC Review:	All of the data have been reviewed for quality assurance. All of the quality control and sample specific information in this package is complete and meets or exceeds the minimum requirements for acceptability.
Comments:	All samples arrived at the laboratory in a condition acceptable for analysis. If you have any questions or concerns regarding this analysis, please feel free to contact me.

Laboratory Certification Statements

I certify that to the best of my knowledge:

- Test data and all corresponding information have been checked for accuracy and completeness.
- Analyses have been conducted in accordance with approved protocol and reference methods (as applicable).
- All deviations, method modifications, or analytical anomalies are summarized in the appropriate report narrative(s).
- Analysis results only represent that of the samples as received into the
- This document contains a total of 4 pages.

This test report shall not be reproduced except in full, without the written approval of the laboratory.

Gayle Swanson

Analyst Date

5/19/2016

Quality Assurance Review Date

TRC

Sample Receipt Checklist

TRC Client Office: Burr Ridge

Date: 5/12/2016

Project #: 253282

Time: 1:15

 # Samples: 19

Recipient: GS

	Yes or No
Container Seals Inspected	
Present?	Y
If present, are seals intact?	Y
Chain-of-Custody Form Inspected	
COC present with samples?	Y
Name of individual who collected samples on COC?	Y
Date of sample collection on COC?	Y
COC indicates analytical methodology to be used for each sample?	Y
Has form been signed - Relinquished By?	Y
Have date and time custody released been noted on form?	Y
Are you signing COC - Received By?	Y
Have date and time custody received noted on form?	Y
All Sample Containers Inspected	
Does number of samples match number on COC form?	Y
Do all sample IDs on sample labels match those on the COC form?	Y
Are the sample containers intact?	Y
No signs of leakage?	Y
No visible damage to sample containers?	Y

Sample Temperature Upon Receipt 70 °F

Notes and/or Explanations for any "No" above:

Signed (Recipient): Gage Swan

AM-LAB-29 Rev. 2
5/27/15

Laboratory Report Summary

TRC Office: Burr Ridge
Company: Elkhart Brass
Facility: Elkhart Foundry
Project #: 253282
Analysis Date(s): 5/13-18/2016
Analyst: Gayle Swanson

Method 5 Data

PM Filter:

Client Sample ID	Net Mass (mg)
28232 Melt 1 Stack Run 1	31.5
28234 Melt 1 Stack Run 2	34.1
28236 Melt 1 Stack Run 3	26.5
28238 Melt 2 Stack Run 1	17.1
28240 Melt 2 Stack Run 2	27.6
28242 Melt 2 Stack Run 3	26.6
28244 Tap Hood Run 1	18.5
28246 Tap Hood Run 2	22.0
28248 Tap Hood Run 3	22.5

PM Front Half Wash:

Client Sample ID	Sample Volume (ml)	Net Mass (mg)
28233 Melt 1 Stack Run 1	54	3.6
28235 Melt 1 Stack Run 2	67	5.9
28237 Melt 1 Stack Run 3	51	8.6
28239 Melt 2 Stack Run 1	58	2.7
28241 Melt 2 Stack Run 2	50	3.3
28243 Melt 2 Stack Run 3	43	4.1
28245 Tap Hood Run 1	69	10.2
28247 Tap Hood Run 2	52	8.7
28249 Tap Hood Run 3	52	12.3
28250 Acetone Blank	195	0.0

Method 5 Particulate Laboratory Run Data

TRC Office:	Burr Ridge
Company:	Elkhart Brass
Facility:	Elkhart Foundry
Project #:	253282
Analysis Date(s):	5/13-18/2016
Analyst:	Gayle Swanson

Description/Comments:	Filter Data			
Client Sample ID	**Filter #**	**Initial Weight (g)**	**Final Weight (g)**	**Net Weight (g)**
28232 Melt 1 Stack Run 1	9364	0.9556	0.9871	0.0315
28234 Melt 1 Stack Run 2	9468	0.6487	0.6828	0.0341
28236 Melt 1 Stack Run 3	9470	0.6566	0.6831	0.0265
28238 Melt 2 Stack Run 1	9397	0.9263	0.9434	0.0171
28240 Melt 2 Stack Run 2	9400	0.9154	0.9430	0.0276
28242 Melt 2 Stack Run 3	9471	0.6527	0.6793	0.0266
28244 Tap Hood Run 1	9365	0.9511	0.9696	0.0185
28246 Tap Hood Run 2	9469	0.6641	0.6861	0.0220
28248 Tap Hood Run 3	9472	0.6658	0.6883	0.0225

Description/Comments:	Acetone Wash Data				
Client Sample ID	**Weighing Pan #**	**Volume (mL)**	**Initial Weight (g)**	**Final Weight (g)**	**Net Weight (g)**
28233 Melt 1 Stack Run 1	10101-05	54	8.4249	8.4285	0.0036
28235 Melt 1 Stack Run 2	10106-10	67	8.3634	8.3693	0.0059
28237 Melt 1 Stack Run 3	10111-15	51	8.3484	8.3570	0.0086
28239 Melt 2 Stack Run 1	10116-20	58	8.2663	8.2690	0.0027
28241 Melt 2 Stack Run 2	10141-45	50	8.4389	8.4422	0.0033
28243 Melt 2 Stack Run 3	10146-50	43	8.4599	8.4640	0.0041
28245 Tap Hood Run 1	10151-55	69	8.2995	8.3097	0.0102
28247 Tap Hood Run 2	10156-60	52	8.3217	8.3304	0.0087
28249 Tap Hood Run 3	8026-30	52	8.5209	8.5332	0.0123
28250 Acetone Blank	8031-35	195	8.4881	8.4881	0.0000

TRC Report Number 253282A 43 of 273

TRC
Results you can rely on

Chain of Custody Record

Project Name: Elkhart Brass	TRC Contact: Paul Coleman	T: 219-616-0835	
	Email: pcoleman@trcsolutions.com		
Site Name: Elkhart Foundry	Sampling System Prepared by: Paul Coleman		
Project No.: 253282	Samples Recovered by: Paul Coleman		

General Instructions: This form documents all changes in custody. The name and dated signature for each person associated with the release or receipt of the listed samples must be recorded.

Sub Lab ID	Sample ID Number	Sample Description* (Unit-Location-Method-Run-Container Number)	Date Sampled	Run Time (Optional)	**No. of Containers	Analyses Required: USEPA Method 5					Comments:
	28232	Melt 1-Stack-M5-Run 1-032	5/11/2016		1	X					Filter
	28233	Melt 1-Stack-M5-Run 1-033	5/11/2016		1	X					Probe wash
	28234	Melt 1-Stack-M5-Run 2-034	5/11/2016		1	X					Filter
	28235	Melt 1-Stack-M5-Run 2-035	5/11/2016		1	X					Probe wash
	28236	Melt 1-Stack-M5-Run 3-036	5/11/2016		1	X					Filter
	28237	Melt 1-Stack-M5-Run 3-037	5/11/2016		1	X					Probe wash
	28238	Melt 2-Stack-M5-Run 1-038	5/11/2016		1	X					Filter
	28239	Melt 2-Stack-M5-Run 1-039	5/11/2016		1	X					Probe wash
	28240	Melt 2-Stack-M5-Run 2-040	5/11/2016		1	X					Filter
	28241	Melt 2-Stack-M5-Run 2-041	5/11/2016		1	X					Probe wash
	28242	Melt 2-Stack-M5-Run 3-042	5/11/2016		1	X					Filter
	28243	Melt 2-Stack-M5-Run 3-043	5/11/2016		1	X					Probe wash

TAT: Standard Need By Date:	Project Remarks:	Relinquished by: (Sign & Print)	Date/Time	Received by: (Sign & Print)	Date/Time
Shipped by: Shipped On:		Paul Coleman	5/12/16	[illegible]	5/12/16
Ship To Attn:		Paul Coleman	11:30 AM	Gayle Swanson	1:15
Lab:					
Address:					
Phone:					

Special Instructions:

SUBCONTRACTOR LABORATORY MUST CONTACT THE CITED TRC CONTACT TO ENSURE A PO IS IN PLACE.

TRC Environmental Corporation
7521 Brush Hill Road
Burr Ridge, Illinois 60527 USA
T: (312) 533-2042 F: (312)533-2070

AM-EMT-60 Rev. No: 7
Revised: 06/13/14

© 2014 TRC Environmental Corp.

TRC
Results you can rely on

Chain of Custody Record

Project Name: Elkhart Brass

Site Name: Elkhart Foundry

Project No.: 253282

TRC Contact: Paul Coleman T: 219-616-0835

Email: pcoleman@trcsolutions.com

Sampling System Prepared by: Paul Coleman

Samples Recovered by: Paul Coleman

General Instructions: This form documents all changes in custody. The name and dated signature for each person associated with the release or receipt of the listed samples must be recorded.

Sub Lab ID	Sample ID Number	Sample Description* (Unit-Location-Method-Run-Container Number)	Date Sampled	Run Time (Optional)	**No. of Containers	Analyses Required: USEPA Method 5					Comments:
	28244	Tap Hood-Stack-M5-Run 1-044	5/11/2016		1	X					Filter
	28245	Tap Hood-Stack-M5-Run 1-045	5/11/2016		1	X					Probe wash
	28246	Tap Hood-Stack-M5-Run 2-046	5/11/2016		1	X					Filter
	28247	Tap Hood-Stack-M5-Run 2-047	5/11/2016		1	X					Probe wash
	28248	Tap Hood-Stack-M5-Run 3-048	5/11/2016		1	X					Filter
	28249	Tap Hood-Stack-M5-Run 3-049	5/11/2016		1	X					Probe wash
	28250	Acetone Blank-050	5/11/2016		1	X					

TAT: Standard Need By Date:

Shipped by: Shipped On:

Ship To Attn:

Lab:

Address:

Phone:

Project Remarks:

Relinquished by: (Sign & Print)	Date/Time	Received by: (Sign & Print)	Date/Time
Paul Coleman	5/12/16	Gage Swan	5/12/16
Paul Coleman	11:30 AM	Gayle Swanson	1:15

Special Instructions:

SUBCONTRACTOR LABORATORY MUST CONTACT THE CITED TRC CONTACT TO ENSURE A PO IS IN PLACE.

TRC Environmental Corporation
7521 Brush Hill Road
Burr Ridge, Illinois 60527 USA
T: (312) 533-2042 F: (312)533-2070

© 2014 TRC Environmental Corp.

TRC
Results you can rely on

Chain of Custody Record

Project Name: Elkhart Brass

Site Name: Elkhart Foundry

Project No.: 253282

TRC Contact: Paul Coleman T: 219-616-0835

Email: pcoleman@trcsolutions.com

Sampling System Prepared by: Paul Coleman

Samples Recovered by: Paul Coleman

Analyses Required: USEPA Method 12

General Instructions: This form documents all changes in custody. The name and dated signature for each person associated with the release or receipt of the listed samples must be recorded.

Sub Lab ID	Sample ID Number	Sample Description* (Unit-Location-Method-Run-Container Number)	Date Sampled	Run Time (Optional)	**No. of Containers		USEPA Method 12				Comments:
	28201	Melt 1-Stack-M12-Run 1-001	5/11/2016		1		X				0.1 N HNO3 back half
	28202	Melt 1- Stack-M12-Run 1 -002	5/11/2016		1		X				Filter
	28203	Melt 1- Stack-M12-Run 1 -003	5/11/2016		1		X				0.1 N HNO3 probe wash
	28204	Melt 1-Stack-M12-Run 2-004	5/11/2016		1		X				0.1 N HNO3 back half
	28205	Melt 1- Stack-M12-Run 2 -005	5/11/2016		1		X				Filter
	28206	Melt 1- Stack-M12-Run 2 -006	5/11/2016		1		X				0.1 N HNO3 probe wash
	28207	Melt 1-Stack-M12-Run 3-007	5/11/2016		1		X				0.1 N HNO3 back half
	28208	Melt 1- Stack-M12-Run 3 -008	5/11/2016		1		X				Filter
	28209	Melt 1- Stack-M12-Run 3 -009	5/11/2016		1		X				0.1 N HNO3 probe wash

TAT: Standard Need By Date:

Shipped by: Shipped On:

Ship To Attn: Tarif Rahman

Lab: Maxxam

Address: 5555 N. Service Rd. Burlington, Ontario Canada L7L 5H7

Phone: 905-817-5831

Project Remarks:

Relinquished by: (Sign & Print)	Date/Time	Received by: (Sign & Print)	Date/Time
Paul Coleman Paul Coleman	5/12/16 11:00 AM	Stefy Swan Gayle Swanson	5/12/16 11:10
Stefy Swan Gayle Swanson	5/13/16 7:50		5-13-16

Special Instructions:

SUBCONTRACTOR LABORATORY MUST CONTACT THE CITED TRC CONTACT TO ENSURE A PO IS IN PLACE.

TRC Environmental Corporation
7521 Brush Hill Road
Burr Ridge, Illinois 60527 USA
T: (312) 533-2042 F: (312)533-2070

AM-EMT-60 Rev. No: 7
Revised: 06/13/14

© 2014 TRC Environmental Corp.

TRC
Results you can rely on

Chain of Custody Record

Project Name: Elkhart Brass

Site Name: Elkhart Foundry

Project No.: 253282

TRC Contact: Paul Coleman T: 219-616-0835

Email: pcoleman@trcsolutions.com

Sampling System Prepared by: Paul Coleman

Samples Recovered by: Paul Coleman

Analyses Required: USEPA Method 12

General Instructions: This form documents all changes in custody. The name and dated signature for each person associated with the release or receipt of the listed samples must be recorded.

Sub Lab ID	Sample ID Number	Sample Description* (Unit-Location-Method-Run-Container Number)	Date Sampled	Run Time (Optional)	**No. of Containers		USEPA Method 12				Comments:
	28210	Melt 2-Stack-M12-Run 1-010	5/11/2016		1		X				0.1 N HNO3 back half
	28211	Melt 2- Stack-M12-Run 1 -011	5/11/2016		1		X				Filter
	28212	Melt 2- Stack-M12-Run 1 -012	5/11/2016		1		X				0.1 N HNO3 probe wash
	28213	Melt 2-Stack-M12-Run 2-013	5/11/2016		1		X				0.1 N HNO3 back half
	28214	Melt 2- Stack-M12-Run 2 -014	5/11/2016		1		X				Filter
	28215	Melt 2- Stack-M12-Run 2 -015	5/11/2016		1		X				0.1 N HNO3 probe wash
	28216	Melt 2-Stack-M12-Run 3-016	5/11/2016		1		X				0.1 N HNO3 back half
	28217	Melt 2- Stack-M12-Run 3 -017	5/11/2016		1		X				Filter
	28218	Melt 2- Stack-M12-Run 3 -018	5/11/2016		1		X				0.1 N HNO3 probe wash

TAT: Standard Need By Date:

Shipped by: Shipped On:

Ship To Attn: Tarif Rahman

Lab: Maxxam

Address: 5555 N. Service Rd. Burlington, Ontario Canada L7L 5H7

Phone: 905-817-5831

Project Remarks:

Relinquished by: (Sign & Print)	Date/Time	Received by: (Sign & Print)	Date/Time
PAUL COLEMAN	5/12/16	[illegible]	5/12/16
Paul Coleman	11:00 AM	Gayle Swanson	11:10
[illegible]	5/13/16	[illegible]	5-13-16
Gayle Swanson	7:50		

Special Instructions:

SUBCONTRACTOR LABORATORY MUST CONTACT THE CITED TRC CONTACT TO ENSURE A PO IS IN PLACE.

TRC Environmental Corporation
7521 Brush Hill Road
Burr Ridge, Illinois 60527 USA
T: (312) 533-2042 F: (312)533-2070

© 2014 TRC Environmental Corp.

TRC
Results you can rely on

Chain of Custody Record

Project Name: Elkhart Brass
Site Name: Elkhart Foundry
Project No.: 253282

TRC Contact: Paul Coleman T: 219-616-0835
Email: pcoleman@trcsolutions.com
Sampling System Prepared by: Paul Coleman
Samples Recovered by: Paul Coleman

Analyses Required: USEPA Method 12

General Instructions: This form documents all changes in custody. The name and dated signature for each person associated with the release or receipt of the listed samples must be recorded.

Sub Lab ID	Sample ID Number	Sample Description* (Unit-Location-Method-Run-Container Number)	Date Sampled	Run Time (Optional)	**No. of Containers		USEPA Method 12				Comments:
	28219	Tap Hood-Stack-M12-Run 1-019	5/11/2016		1		X				0.1 N HNO3 back half
	28220	Tap Hood- Stack-M12-Run 1 -020	5/11/2016		1		X				Filter
	28221	Tap Hood- Stack-M12-Run 1 -021	5/11/2016		1		X				0.1 N HNO3 probe wash
	28222	Tap Hood-Stack-M12-Run 2-022	5/11/2016		1		X				0.1 N HNO3 back half
	28223	Tap Hood- Stack-M12-Run 2 -023	5/11/2016		1		X				Filter
	28224	Tap Hood- Stack-M12-Run 2 -024	5/11/2016		1		X				0.1 N HNO3 probe wash
	28225	Tap Hood-Stack-M12-Run 3-025	5/11/2016		1		X				0.1 N HNO3 back half
	28226	Tap Hood- Stack-M12-Run 3 -026	5/11/2016		1		X				Filter
	28227	Tap Hood- Stack-M12-Run 3 -027	5/11/2016		1		X				0.1 N HNO3 probe wash
	28228	Lead Audit Sample-028			1		X				Filter
	28229	Lead Audit Sample-029			1		X				ampule
	28230	Filter blank-030	5/11/2016		1		X				Filter
	28231	Reagent Blank-031	5/11/2016		1		X				0.1 N HNO3

TAT: Standard Need By Date:
Shipped by: Shipped On:
Ship To Attn: Tarif Rahman
Lab: Maxxam
Address: 5555 N. Service Rd. Burlington, Ontario Canada L7L 5H7
Phone: 905-817-5831

Project Remarks:

Relinquished by: (Sign & Print)	Date/Time	Received by: (Sign & Print)	Date/Time
Paul Coleman	5/12/16 11:00 AM	Gayle Swanson	5/12/16 11:10
Gayle Swanson	5/13/16 7:56		5-13-16

Special Instructions:

SUBCONTRACTOR LABORATORY MUST CONTACT THE CITED TRC CONTACT TO ENSURE A PO IS IN PLACE.

TRC Environmental Corporation
7521 Brush Hill Road
Burr Ridge, Illinois 60527 USA
T: (312) 533-2042 F: (312)533-2070

AM-EMT-60 Rev. No: 7
Revised: 06/13/14

© 2014 TRC Environmental Corp.

TRC

Method 12 Sample Analysis Summary

Project#:	**253282**	Unit ID:	**Melt 1**
Company:	**Elkhart Brass**	Location:	**Stack**
Plant:	**Elkhart, IN**	Test Date(s):	**May 11, 2016**

Filter Diameter (mm): 115 (Anderson)

Gross front-half metals

	Run 1	Run 2	Run 3	Run 4	Reagent Blank
Pb (µg)	2940.00	2430.00	1360.00	-	< 15.20

"<" indicates that the mass of a metal in the sample was below the laboratory analytical detection limit

Blank-corrected front-half metals

	Run 1	Run 2	Run 3	Run 4
Pb (µg)	2924.80	2414.80	1344.80	-

* If "<" preceeds a "Gross" value, subsequent calculations were conducted using the detection limit

© 2016 TRC Environmental Corp.

AM-EMT-15 Rev. 35.4
1/6/2016

Method 12 Sample Analysis Summary

Project#:	**253282**	Unit ID:	**Melt 2**
Company:	**Elkhart Brass**	Location:	**Stack**
Plant:	**Elkhart, IN**	Test Date(s):	**May 11, 2016**

Filter Diameter (mm): 115 (Anderson)

Gross front-half metals

	Run 1	Run 2	Run 3	Run 4	Reagent Blank
Pb (µg)	1330.00	2000.00	1470.00	-	< 15.20

"<" indicates that the mass of a metal in the sample was below the laboratory analytical detection limit

Blank-corrected front-half metals

	Run 1	Run 2	Run 3	Run 4
Pb (µg)	1314.80	1984.80	1454.80	-

* If "<" preceeds a "Gross" value, subsequent calculations were conducted using the detection limit

© 2016 TRC Environmental Corp.

AM-EMT-15 Rev. 35.4
1/6/2016

TRC

Method 12 Sample Analysis Summary

Project#:	**253282**	Unit ID:	**Tap Hood**
Company:	**Elkhart Brass**	Location:	**Stack**
Plant:	**Elkhart, IN**	Test Date(s):	**May 11, 2016**

Filter Diameter (mm): 115 (Anderson)

Gross front-half metals

	Run 1	Run 2	Run 3	Run 4	Reagent Blank
Pb (µg)	1960.00	1450.00	1130.00	-	< 15.20

"<" indicates that the mass of a metal in the sample was below the laboratory analytical detection limit

Blank-corrected front-half metals

	Run 1	Run 2	Run 3	Run 4
Pb (µg)	1944.80	1434.80	1114.80	-

* If "<" preceeds a "Gross" value, subsequent calculations were conducted using the detection limit

© 2016 TRC Environmental Corp.

AM-EMT-15 Rev. 35.4
1/6/2016

Maxxam
A Bureau Veritas Group Company

Your Project #: 253282
Site#: ELKHART FOUNDRY
Site Location: ELKHART BRASS

Attention:Paul Coleman

TRC Companies Inc
7521 BRUSH HILL ROAD
BURR RIDGE, IL
USA 60527

Report Date: 2016/05/30
Report #: R4009795
Version: 1 - Final

CERTIFICATE OF ANALYSIS

MAXXAM JOB #: B699259
Received: 2016/05/13, 18:30

Sample Matrix: Stack Sampling Train
Samples Received: 13

Analyses	Quantity	Date Extracted	Date Analyzed	Laboratory Method	Reference
Lead in Filter by ICPMS (M12mod) (1)	13	2016/05/25	2016/05/27	BRL SOP-00103	EPA 12 m

Reference Method suffix "m" indicates test methods incorporate validated modifications from specific reference methods to improve performance.
* RPDs calculated using raw data. The rounding of final results may result in the apparent difference.
(1) EPA Method 12 Modification - The analysis for the lead was completed using ICPMS instead of flame AA.

Encryption Key

Tarifur Rahman
Project Manager - Air Toxics, Source Evaluation
31 May 2016 10:04:46 -04:00

Please direct all questions regarding this Certificate of Analysis to your Project Manager.
Tarifur Rahman, Project Manager - Air Toxics, Source Evaluation
Email: TRahman@maxxam.ca
Phone# (905) 817-5700

==========

Maxxam has procedures in place to guard against improper use of the electronic signature and have the required "signatories", as per section 5.10.2 of ISO/IEC 17025:2005(E), signing the reports. For Service Group specific validation please refer to the Validation Signature Page.

Maxxam Analytics International Corporation o/a Maxxam Analytics 6740 Campobello Road, Mississauga, Ontario, L5N 2L8 Tel: (905) 817-5700 Toll-Free: 800-563-6266 Fax: (905) 817-5777 www.maxxam.ca

Maxxam
A Bureau Veritas Group Company

Maxxam Job #: B699259
Report Date: 2016/05/30

TRC Companies Inc
Client Project #: 253282
Site Location: ELKHART BRASS

ELEMENTS BY ICP/MS (STACK SAMPLING TRAIN)

Maxxam ID		CJG159		CJG161		CJG162	CJG162		
Sampling Date		2016/05/11		2016/05/11		2016/05/11	2016/05/11		
	UNITS	M12 - BLANK FILTER	RDL	M12 - BLANK REAGENT	RDL	M12 - MELT1 R1	M12 - MELT1 R1 Lab-Dup	RDL	QC Batch
Metals									
Inorganic Lead (Pb)	ug	15	2	<0.2	0.2	2940	2990	5	4511698

RDL = Reportable Detection Limit
QC Batch = Quality Control Batch
Lab-Dup = Laboratory Initiated Duplicate

Maxxam ID		CJG175	CJG176	CJG177	CJG178	CJG179		
Sampling Date		2016/05/11	2016/05/11	2016/05/11	2016/05/11	2016/05/11		
	UNITS	M12 - MELT1 R2	M12 - MELT1 R3	M12 - MELT2 R1	M12 - MELT2 R2	M12 - MELT2 R3	RDL	QC Batch
Metals								
Inorganic Lead (Pb)	ug	2430	1360	1330	2000	1470	5	4511698

RDL = Reportable Detection Limit
QC Batch = Quality Control Batch

Maxxam ID		CJG180	CJG181	CJG182		CJG248		
Sampling Date		2016/05/11	2016/05/11	2016/05/11				
	UNITS	M12 - TAP HOOD R1	M12 - TAP HOOD R2	M12 - TAP HOOD R3	RDL	AUDIT-042916N-1429	RDL	QC Batch
Metals								
Inorganic Lead (Pb)	ug	1960	1450	1130	5	152	0.5	4511698

RDL = Reportable Detection Limit
QC Batch = Quality Control Batch

Maxxam ID		CJG249		
Sampling Date				
	UNITS	AUDIT-042916N-1430	RDL	QC Batch
Metals				
Inorganic Lead (Pb)	ug	11.9	0.03	4511698

RDL = Reportable Detection Limit
QC Batch = Quality Control Batch

Maxxam Analytics International Corporation o/a Maxxam Analytics 6740 Campobello Road, Mississauga, Ontario, L5N 2L8 Tel: (905) 817-5700 Toll-Free: 800-563-6266 Fax: (905) 817-5777 www.maxxam.ca

Maxxam
A Bureau Veritas Group Company

Maxxam Job #: B699259
Report Date: 2016/05/30

TRC Companies Inc
Client Project #: 253282
Site Location: ELKHART BRASS

TEST SUMMARY

Maxxam ID: CJG159
Sample ID: M12 - BLANK FILTER
Matrix: Stack Sampling Train
Collected: 2016/05/11
Shipped:
Received: 2016/05/13

Test Description	Instrumentation	Batch	Extracted	Date Analyzed	Analyst
Lead in Filter by ICPMS (M12mod)	ICP1	4511698	2016/05/25	2016/05/27	Nan Raykha

Maxxam ID: CJG161
Sample ID: M12 - BLANK REAGENT
Matrix: Stack Sampling Train
Collected: 2016/05/11
Shipped:
Received: 2016/05/13

Test Description	Instrumentation	Batch	Extracted	Date Analyzed	Analyst
Lead in Filter by ICPMS (M12mod)	ICP1	4511698	2016/05/25	2016/05/27	Nan Raykha

Maxxam ID: CJG162
Sample ID: M12 - MELT1 R1
Matrix: Stack Sampling Train
Collected: 2016/05/11
Shipped:
Received: 2016/05/13

Test Description	Instrumentation	Batch	Extracted	Date Analyzed	Analyst
Lead in Filter by ICPMS (M12mod)	ICP1	4511698	2016/05/25	2016/05/27	Nan Raykha

Maxxam ID: CJG162 Dup
Sample ID: M12 - MELT1 R1
Matrix: Stack Sampling Train
Collected: 2016/05/11
Shipped:
Received: 2016/05/13

Test Description	Instrumentation	Batch	Extracted	Date Analyzed	Analyst
Lead in Filter by ICPMS (M12mod)	ICP1	4511698	2016/05/25	2016/05/27	Nan Raykha

Maxxam ID: CJG175
Sample ID: M12 - MELT1 R2
Matrix: Stack Sampling Train
Collected: 2016/05/11
Shipped:
Received: 2016/05/13

Test Description	Instrumentation	Batch	Extracted	Date Analyzed	Analyst
Lead in Filter by ICPMS (M12mod)	ICP1	4511698	2016/05/25	2016/05/27	Nan Raykha

Maxxam ID: CJG176
Sample ID: M12 - MELT1 R3
Matrix: Stack Sampling Train
Collected: 2016/05/11
Shipped:
Received: 2016/05/13

Test Description	Instrumentation	Batch	Extracted	Date Analyzed	Analyst
Lead in Filter by ICPMS (M12mod)	ICP1	4511698	2016/05/25	2016/05/27	Nan Raykha

Maxxam ID: CJG177
Sample ID: M12 - MELT2 R1
Matrix: Stack Sampling Train
Collected: 2016/05/11
Shipped:
Received: 2016/05/13

Test Description	Instrumentation	Batch	Extracted	Date Analyzed	Analyst
Lead in Filter by ICPMS (M12mod)	ICP1	4511698	2016/05/25	2016/05/27	Nan Raykha

Maxxam Analytics International Corporation o/a Maxxam Analytics 6740 Campobello Road, Mississauga, Ontario, L5N 2L8 Tel: (905) 817-5700 Toll-Free: 800-563-6266 Fax: (905) 817-5777 www.maxxam.ca

Maxxam
A Bureau Veritas Group Company

Maxxam Job #: B699259
Report Date: 2016/05/30

TRC Companies Inc
Client Project #: 253282
Site Location: ELKHART BRASS

TEST SUMMARY

Maxxam ID: CJG178
Sample ID: M12 - MELT2 R2
Matrix: Stack Sampling Train

Collected: 2016/05/11
Shipped:
Received: 2016/05/13

Test Description	Instrumentation	Batch	Extracted	Date Analyzed	Analyst
Lead in Filter by ICPMS (M12mod)	ICP1	4511698	2016/05/25	2016/05/27	Nan Raykha

Maxxam ID: CJG179
Sample ID: M12 - MELT2 R3
Matrix: Stack Sampling Train

Collected: 2016/05/11
Shipped:
Received: 2016/05/13

Test Description	Instrumentation	Batch	Extracted	Date Analyzed	Analyst
Lead in Filter by ICPMS (M12mod)	ICP1	4511698	2016/05/25	2016/05/27	Nan Raykha

Maxxam ID: CJG180
Sample ID: M12 - TAP HOOD R1
Matrix: Stack Sampling Train

Collected: 2016/05/11
Shipped:
Received: 2016/05/13

Test Description	Instrumentation	Batch	Extracted	Date Analyzed	Analyst
Lead in Filter by ICPMS (M12mod)	ICP1	4511698	2016/05/25	2016/05/27	Nan Raykha

Maxxam ID: CJG181
Sample ID: M12 - TAP HOOD R2
Matrix: Stack Sampling Train

Collected: 2016/05/11
Shipped:
Received: 2016/05/13

Test Description	Instrumentation	Batch	Extracted	Date Analyzed	Analyst
Lead in Filter by ICPMS (M12mod)	ICP1	4511698	2016/05/25	2016/05/27	Nan Raykha

Maxxam ID: CJG182
Sample ID: M12 - TAP HOOD R3
Matrix: Stack Sampling Train

Collected: 2016/05/11
Shipped:
Received: 2016/05/13

Test Description	Instrumentation	Batch	Extracted	Date Analyzed	Analyst
Lead in Filter by ICPMS (M12mod)	ICP1	4511698	2016/05/25	2016/05/27	Nan Raykha

Maxxam ID: CJG248
Sample ID: AUDIT-042916N-1429
Matrix: Stack Sampling Train

Collected:
Shipped:
Received: 2016/05/13

Test Description	Instrumentation	Batch	Extracted	Date Analyzed	Analyst
Lead in Filter by ICPMS (M12mod)	ICP1	4511698	2016/05/25	2016/05/27	Nan Raykha

Maxxam ID: CJG249
Sample ID: AUDIT-042916N-1430
Matrix: Stack Sampling Train

Collected:
Shipped:
Received: 2016/05/13

Test Description	Instrumentation	Batch	Extracted	Date Analyzed	Analyst
Lead in Filter by ICPMS (M12mod)	ICP1	4511698	2016/05/25	2016/05/27	Nan Raykha

Maxxam Analytics International Corporation o/a Maxxam Analytics 6740 Campobello Road, Mississauga, Ontario, L5N 2L8 Tel: (905) 817-5700 Toll-Free: 800-563-6266 Fax: (905) 817-5777 www.maxxam.ca

Maxxam
A Bureau Veritas Group Company

Maxxam Job #: B699259
Report Date: 2016/05/30

TRC Companies Inc
Client Project #: 253282
Site Location: ELKHART BRASS

GENERAL COMMENTS

Sample CJG249-01 : Data for this sample is reported in ug/mL

ELEMENTS BY ICP/MS (STACK SAMPLING TRAIN)

Lead in Filter by ICPMS (M12mod): Extra 10x dilution was required for all samples except CJG161 and CJG248, due to the matrix and high levels. Post digestion duplicate and spike were done on sample CJG162.

Results relate only to the items tested.

Maxxam Analytics International Corporation o/a Maxxam Analytics 6740 Campobello Road, Mississauga, Ontario, L5N 2L8 Tel: (905) 817-5700 Toll-Free: 800-563-6266 Fax: (905) 817-5777 www.maxxam.ca

Maxxam
A Bureau Veritas Group Company

Maxxam Job #: B699259
Report Date: 2016/05/30

TRC Companies Inc
Client Project #: 253282
Site Location: ELKHART BRASS

QUALITY ASSURANCE REPORT

QA/QC Batch	Init	QC Type	Parameter	Date Analyzed	Value	Recovery	UNITS	QC Limits
4511698	N_R	Matrix Spike [CJG162-01]	Inorganic Lead (Pb)	2016/05/27		110	%	70 - 130
4511698	N_R	RPD [CJG162-01]	Inorganic Lead (Pb)	2016/05/27	1.8		%	20
			Inorganic Lead (Pb)	2016/05/27	1.7		%	20
4511698	N_R	Spiked Blank	Inorganic Lead (Pb)	2016/05/27		107	%	85 - 115
4511698	N_R	RPD	Inorganic Lead (Pb)	2016/05/27	1.2		%	20
4511698	N_R	Method Blank	Inorganic Lead (Pb)	2016/05/27	<0.5		ug	

Duplicate: Paired analysis of a separate portion of the same sample. Used to evaluate the variance in the measurement.

Matrix Spike: A sample to which a known amount of the analyte of interest has been added. Used to evaluate sample matrix interference.

Spiked Blank: A blank matrix sample to which a known amount of the analyte, usually from a second source, has been added. Used to evaluate method accuracy.

Method Blank: A blank matrix containing all reagents used in the analytical procedure. Used to identify laboratory contamination.

Maxxam Analytics International Corporation o/a Maxxam Analytics 6740 Campobello Road, Mississauga, Ontario, L5N 2L8 Tel: (905) 817-5700 Toll-Free: 800-563-6266 Fax: (905) 817-5777 www.maxxam.ca

Maxxam
A Bureau Veritas Group Company

Maxxam Job #: B699259
Report Date: 2016/05/30

TRC Companies Inc
Client Project #: 253282
Site Location: ELKHART BRASS

VALIDATION SIGNATURE PAGE

The analytical data and all QC contained in this report were reviewed and validated by the following individual(s).

Ralph Siebert, Operations Manager - Inorganic Analyses

Maxxam has procedures in place to guard against improper use of the electronic signature and have the required "signatories", as per section 5.10.2 of ISO/IEC 17025:2005(E), signing the reports. For Service Group specific validation please refer to the Validation Signature Page.

Maxxam Analytics International Corporation o/a Maxxam Analytics 6740 Campobello Road, Mississauga, Ontario, L5N 2L8 Tel: (905) 817-5700 Toll-Free: 800-563-6266 Fax: (905) 817-5777 www.maxxam.ca

TRC
Results you can rely on

B699259

Chain of Custody Record

Page 1 of 3

Project Name: Elkhart Brass	TRC Contact: Paul Coleman	T: 219-616-0835
	Email: pcoleman@trcsolutions.com	
Site Name: Elkhart Foundry	Sampling System Prepared by: Paul Coleman	
Project No.: 253282	Samples Recovered by: Paul Coleman	

General Instructions: This form documents all changes in custody. The name and dated signature for each person associated with the release or receipt of the listed samples must be recorded.

Sub Lab ID	Sample ID Number	Sample Description* (Unit-Location-Method-Run-Container Number)	Date Sampled	Run Time (Optional)	**No. of Containers		Analyses Required: USEPA Method 12				Comments:
	28201	Melt 1-Stack-M12-Run 1-001	5/11/2016		1		X				0.1 N HNO3 back half
	28202	Melt 1- Stack-M12-Run 1 -002	5/11/2016		1		X				Filter
	28203	Melt 1- Stack-M12-Run 1 -003	5/11/2016		1		X				0.1 N HNO3 probe wash
	28204	Melt 1-Stack-M12-Run 2-004	5/11/2016		1		X				0.1 N HNO3 back half
	28205	Melt 1- Stack-M12-Run 2 -005	5/11/2016		1		X				Filter
	28206	Melt 1- Stack-M12-Run 2 -006	5/11/2016		1		X				0.1 N HNO3 probe wash
	28207	Melt 1-Stack-M12-Run 3-007	5/11/2016		1		X				0.1 N HNO3 back half
	28208	Melt 1- Stack-M12-Run 3 -008	5/11/2016		1		X				Filter
	28209	Melt 1- Stack-M12-Run 3 -009	5/11/2016		1		X				0.1 N HNO3 probe wash

TAT: Standard Need By Date:	Project Remarks:	Relinquished by: (Sign & Print)	Date/Time	Received by: (Sign & Print)	Date/Time
Shipped by: Shipped On:		Paul Coleman	5/12/16	[illegible]	5/12/16
Ship To Attn: Tarif Rahman		Paul Coleman	11:00 AM	[illegible]	11:20
Lab: Maxxam		[illegible]	5/13/16	[illegible]	5-13-16
Address: 5555 N. Service Rd. Burlington, Ontario Canada L7L 5H7		[illegible]	7:50	[illegible]	2-16-05/13
Phone: 905-817-5831					18:30

Special Instructions:

SUBCONTRACTOR LABORATORY MUST CONTACT THE CITED TRC CONTACT TO ENSURE A PO IS IN PLACE.

TRC Environmental Corporation
7521 Brush Hill Road
Burr Ridge, Illinois 60527 USA
T: (312) 533-2042 F: (312)533-2070

© 2014 TRC Environmental Corp.

AM-EMT-50 Rev. No. 2
Revised: 06/13/14

TRC
Results you can rely on

Chain of Custody Record

Page 2 of 3

Project Name: Elkhart Brass	TRC Contact: Paul Coleman	T: 219-616-0835
	Email: pcoleman@trcsolutions.com	
Site Name: Elkhart Foundry	Sampling System Prepared by: Paul Coleman	
Project No.: 253282	Samples Recovered by: Paul Coleman	

General Instructions: This form documents all changes in custody. The name and dated signature for each person associated with the release or receipt of the listed samples must be recorded.

Sub Lab ID	Sample ID Number	Sample Description* (Unit-Location-Method-Run-Container Number)	Date Sampled	Run Time (Optional)	**No. of Containers	Analyses Required: USEPA Method 12	Comments:
	28210	Melt 2-Stack-M12-Run 1-010	5/11/2016		1	X	0.1 N HNO3 back half
	28211	Melt 2- Stack-M12-Run 1-011	5/11/2016		1	X	Filter
	28212	Melt 2- Stack-M12-Run 1-012	5/11/2016		1	X	0.1 N HNO3 probe wash
	28213	Melt 2-Stack-M12-Run 2-013	5/11/2016		1	X	0.1 N HNO3 back half
	28214	Melt 2- Stack-M12-Run 2-014	5/11/2016		1	X	Filter
	28215	Melt 2- Stack-M12-Run 2-015	5/11/2016		1	X	0.1 N HNO3 probe wash
	28216	Melt 2-Stack-M12-Run 3-016	5/11/2016		1	X	0.1 N HNO3 back half
	28217	Melt 2- Stack-M12-Run 3-017	5/11/2016		1	X	Filter
	28218	Melt 2- Stack-M12-Run 3-018	5/11/2016		1	X	0.1 N HNO3 probe wash

TAT: Standard Need By Date:	Project Remarks:	Relinquished by: (Sign & Print)	Date/Time	Received by: (Sign & Print)	Date/Time
Shipped by: Shipped On:		Paul Coleman	5/12/16	[illegible]	5/12/16
Ship To Attn: Tarif Rahman		Paul Coleman	11:30am	[illegible]	11:10
Lab: Maxxam		[illegible]	5/13/16	[illegible]	5-13-16
Address: 5555 N. Service Rd. Burlington, Ontario Canada L7L 5H7		[illegible]	9:50	[illegible]	2016/05/13
Phone: 905-817-5831					18:30

Special Instructions:

SUBCONTRACTOR LABORATORY MUST CONTACT THE CITED TRC CONTACT TO ENSURE A PO IS IN PLACE.

TRC Environmental Corporation
7521 Brush Hill Road
Burr Ridge, Illinois 60527 USA
T: (312) 533-2042 F: (312)533-2070

© 2014 TRC Environmental Corp.

AM-EMT-90 Rev. No. 7
Revised: 06/13/14

TRC
Results you can rely on

Chain of Custody Record

Page 3 of 3

Project Name: Elkhart Brass	TRC Contact: Paul Coleman	T: 219-616-0835
	Email: pcoleman@trcsolutions.com	
Site Name: Elkhart Foundry	Sampling System Prepared by: Paul Coleman	
Project No.: 253282	Samples Recovered by: Paul Coleman	

General Instructions: This form documents all changes in custody. The name and dated signature for each person associated with the release or receipt of the listed samples must be recorded.

Sub Lab ID	Sample ID Number	Sample Description* (Unit-Location-Method-Run-Container Number)	Date Sampled	Run Time (Optional)	**No. of Containers	Analyses Required: USEPA Method 12				Comments:
	28219	Tap Hood-Stack-M12-Run 1-019	5/11/2016		1	X				0.1 N HNO3 back half
	28220	Tap Hood- Stack-M12-Run 1 -020	5/11/2016		1	X				Filter
	28221	Tap Hood- Stack-M12-Run 1 -021	5/11/2016		1	X				0.1 N HNO3 probe wash
	28222	Tap Hood-Stack-M12-Run 2-022	5/11/2016		1	X				0.1 N HNO3 back half
	28223	Tap Hood- Stack-M12-Run 2 -023	5/11/2016		1	X				Filter
	28224	Tap Hood- Stack-M12-Run 2 -024	5/11/2016		1	X				0.1 N HNO3 probe wash
	28225	Tap Hood-Stack-M12-Run 3-025	5/11/2016		1	X				0.1 N HNO3 back half
	28226	Tap Hood- Stack-M12-Run 3 -026	5/11/2016		1	X				Filter
	28227	Tap Hood- Stack-M12-Run 3 -027	5/11/2016		1	X				0.1 N HNO3 probe wash
	28228	Lead Audit Sample-028			1	X				Filter
	28229	Lead Audit Sample-029			1	X				ampule
	28230	Filter blank-030	5/11/2016		1	X				Filter
	28231	Reagent Blank-031	5/11/2016		1	X				0.1 N HNO3

TAT: Standard Need By Date:	Project Remarks:	Relinquished by: (Sign & Print)	Date/Time	Received by: (Sign & Print)	Date/Time
Shipped by: Shipped On:		Paul Coleman	5/12/16	[illegible]	5/12/16
Ship To Attn: Tarif Rahman		[illegible]	11:50 AM	[illegible]	11:10
Lab: Maxxam		[illegible]	5/13/16	[illegible]	5-13-16
5555 N. Service Rd. Address: Burlington, Ontario Canada L7L 5H7		[illegible]	7:50	[illegible]	5/16/16
Phone: 905-817-5831					18:30

Special Instructions:

SUBCONTRACTOR LABORATORY MUST CONTACT THE CITED TRC CONTACT TO ENSURE A PO IS IN PLACE.

TRC Environmental Corporation
7521 Brush Hill Road
Burr Ridge, Illinois 60527 USA
T: (312) 533-2042 F: (312)533-2070

© 2016 TRC Environmental Corp.

AM-EMT-60 Rev. No. 7
Revised: 06/13/14

ERA
A Waters Company

May 31, 2016

Paul Coleman
TRC Environmental
7521 Brush Hill Road
Burr Ridge, IL 60527

Enclosed is your final report for ERA's Stationary Source Audit Sample (SSAS) Program. Your final report includes an evaluation of all results submitted by your laboratory to ERA.

Data Evaluation Protocols: All analytes in ERA's SSAS Program have been evaluated comparing the reported result to the acceptance limits generated using the criteria contained in the TNI SSAS Table.

For any "Not Acceptable" results, please contact your state regulator for any corrective action requirements.

Thank you for your participation in ERA's SSAS Program. If you have any questions, please contact our Proficiency Testing Department at 1-800-372-0122.

Sincerely,

Pat Larson

Patrick Larson
Quality Officer

cc: Project File Number 042916N

ERA
A Waters Company

Recipient Type	Report Recipient	Contact	Project ID
Agency	IL-EPA Region 5 (SSAS) 77 W Jackson Blvd AE-17J Chicago, IL 60604 USA	Dakota Prentice prentice.dakota@epa.gov Phone: 312-886-6761	
Facility	Elkhart Brass Manufacturing Company 1302 West Beardsley Ave Elkhart, IN 46514 USA	Dennis Grenier dgrenier@elkhartbrass.com Phone: 574-970-7666	
Lab	Maxxam Analytics Inc 6740 Campobello Rd Mississauga, ON L5N 2L8 Canada	Tarif Rahman Project Manager TRahman@Maxxam.ca Phone: (905) 817-5700-5712 Fax: (905) 817-5775	
Tester	TRC Environmental 7521 Brush Hill Road Burr Ridge, IL 60527 USA	Paul Coleman pcoleman@trcsolutions.com Phone: (312) 533-2023	253282

ISO/IEC 17043:2010
ACCREDITED
PROFICIENCY TESTING PROVIDER
CERTIFICATE NO. 1339.01

Project # : 042916N

ERA
A Waters Company

042916N Laboratory Exception Report

Tarif Rahman
Project Manager
Maxxam Analytics Inc
6740 Campobello Rd
Mississauga, ON L5N 2L8
(905) 817-5700-5712

EPA ID: **Not Reported**
ERA Customer Number: **M748564**

Evaluation Checks

There are no values reported with < where the assigned value was greater than 0.

Not Acceptable Evaluations

There were no Not Acceptable evaluations for this study.

ERA

A Waters Company

Final Report Results For Laboratory Maxxam Analytics Inc

ERA
A Waters Company

SSAP Evaluation Report

Project Number: **042916N**

ERA Customer Number: **M748564**

Laboratory Name: **Maxxam Analytics Inc**

Inorganic Results

ERA
A Waters Company

042916N Evaluation Final Complete Report

Tarif Rahman
Project Manager
Maxxam Analytics Inc
6740 Campobello Rd
Mississauga, ON L5N 2L8
(905) 817-5700-5712

EPA ID: Not Reported
ERA Customer Number: M748564

TNI Analyte Code	Analyte	Units	Reported Value	Assigned Value	Acceptance Limits	Performance Evaluation	Method Description	Analysis Date	Analyst Name
SSAP Lead on Filter Paper (cat# 1429, lot# 042916N) Study Dates: 04/29/16 - 05/31/16									
1075	Lead	µg/Filter	152	143	114 - 172	Acceptable	EPA 12 (FAA) 2000	5/27/2016	
SSAP Lead in Impinger Solution (cat# 1430, lot# 042916N) Study Dates: 04/29/16 - 05/31/16									
1075	Lead	µg/mL	11.9	11.4	8.55 - 14.2	Acceptable	EPA 12 (FAA) 2000	5/27/2016	

Company:	Elkhart Brass	**Run:**	1
Plant:	Elkhart, IN	**Test Date:**	5/11/2016
Unit:	Melt 1		
Test Location:	Stack		

X-Factor Isokinetic Sampling Coefficient (based on pre-test data)

$$\textbf{X-Factor} = 846.72 \times (D_n)^4 \times \Delta H_{@I} \times C_p^2 \times (1-B_{ws})^2 \times \frac{(M_d \times T_m \times P_s)}{(M_s \times T_s \times (P_{bar} + (\Delta H_{@I}/13.6)))} \times Ts/Tm$$

Where:

T_s = Temperature of effluent gas (°R)
T_m = Average dry test meter temperature (°R)
D_n = Nozzle Diameter (in.)
$\Delta H_{@I}$ = Orifice pressure drop corresponding to 0.75 cfm meter flow rate (in. H_20)
C_p = Pitot Tube Coefficient (dimensionless)
B_{ws} = Effluent gas fractional moisture content (dimensionless)
M_d = Dry molecular weight of exhaust (lb/lb-mole)
M_s = Molecular weight of exhaust, wet basis (lb/lb-mole)
P_s = Absolute flue gas pressure ("Hg)
P_{bar} = Ambient barometric pressure at sample elevation ("Hg)

D_n =	0.296	in.	P_s =	29.19	in. Hg abs.
$\Delta H_{@I}$ =	1.86	in. H_20	M_s =	28.64	lb/lb-mole
C_p =	0.84	(dimensionless)	T_s =	535	°R
M_d =	28.84	lb/lb-mole	P_{bar} =	29.20	in. Hg
T_m =	535	°R	B_{ws} =	0.018	(dimensionless)

X-Factor = 8.249

Dry Molecular Weight

$$M_d = 0.44 \times (\%CO_2) + 0.32 \times (\%O_2) + 0.28 \times \%N_2$$

Where:

M_d = Effluent gas molecular weight (lb/lb-mole, dry basis)
$\%CO_2$ = Effluent gas Carbon Dioxide Content (% volume, dry basis)
$\%O_2$ = Effluent gas Oxygen Content (% volume, dry basis)
$\%N_2$ = Effluent gas Nitrogen Dioxide Content (% volume, dry basis)

$\%CO_2$ =	0.0	%vol dry	$\%N_2$ =	79.1	%vol dry
$\%O_2$ =	20.9	%vol dry			

M_d = 28.84 lb/lb-mole

© 2016 TRC Environmental Corp.

Company:	Elkhart Brass	**Run:**	1
Plant:	Elkhart, IN	**Test Date:**	5/11/2016
Unit:	Melt 1		
Test Location:	Stack		

Wet Molecular Weight

$$M_s = M_d \times (1 - B_{ws}) + (18.0 \times B_{ws})$$

Where:

M_s = Effluent gas molecular weight (lb/lb-mole, wet basis)

B_{ws} = Effluent gas fractional moisture content (dimensionless)

M_d = 28.84 lb/lb-mole *Bws* = 0.015

M_s = 28.68 lb/lb-mole

Effluent Gas Pressure

$$P_s = P_{bar} + (P_f/13.6)$$

Where:

P_s = flue gas pressure ("Hg)

P_{bar} = Ambient barometric pressure at sample elevation ("Hg)

P_g = Flue gas gauge pressure ("H_2O)

P_{bar} = 29.17 "Hg P_g = -0.18 "H_2O

P_s = 29.16 "Hg

Average Meter Temperature

$$T_m = \frac{\sum_{I=1}^{n} (T_{mini} + T_{mouti})/2}{n}$$

Where:

T_m = Average dry test meter temperature (°R)

T_{min} = Temperature of gas entering dry test meter (°R)

T_{mout} = Temperature of gas leaving dry test meter (°R)

Avg T_{min} = 532.3 °R Avg T_{mout} = 527.3 °R

T_m = 529.8 °R

© 2016 TRC Environmental Corp.

Company:	Elkhart Brass	**Run:**	1
Plant:	Elkhart, IN	**Test Date:**	5/11/2016
Unit:	Melt 1		
Test Location:	Stack		

ΔH at Sample Point - Example Point 2

$$\Delta H_i = \text{X-Factor} \times \Delta Pi \times Tmi/Tsi$$

Where:

ΔH = Pressure drop across calibrated orifice ("H_2O)

ΔP = Pressure drop across pitot ("H_2O)

Ts = Temperature of effluent gas (°R)

X-Factor = 8.249 ΔPi = 0.17 "H_2O

Tmi = 521.5 °R Tsi = 529.0 °R

ΔH_i = 1.38 "H_2O

Sample Volume at Standard Conditions

$$V_{m(std)} = (T_{std}/29.92) \times Y \times V_m \times (P_{bar} + \Delta H/13.6)/T_m$$

Where:

$V_{m(std)}$ = Sample volume collected corrected to 29.92 in. Hg and 528(°R) (ft3, dry basis)

Y = Dry test meter calibration coefficient (dimensionless)

V_m = V_m = Sample volume collected at actual conditions (ft^3, dry basis)

T_{std} = Standard Temperature 528(°R)

Y = 0.992 V_m = 79.940 cf

P_{bar} = 29.17 "Hg ΔH = 1.54 "H_2O

T_m = 529.8 °R T_{std} = 528 °R

$V_{m(std)}$ = 77.348 dscf

Volume of Water Vapor Condensed

$$V_{wc(std)} = 0.04715 \times (T_{std} / 528) \times M_{H2O}$$

Where:

$V_{wc(std)}$ = Volume of water vapor collected at 29.92"Hg and 528°R (ft^3)

M_{H2O} = Net weight gain of impingers (grams)

M_{H2O} = 24.7 grams

$V_{w(std)}$ = 1.165 wscf

© 2016 TRC Environmental Corp.

Company:	Elkhart Brass	**Run:**	1
Plant:	Elkhart, IN	**Test Date:**	5/11/2016
Unit:	Melt 1		
Test Location:	Stack		

Moisture Content

$$B_{ws} = \frac{V_{wc(std)}}{V_{wc(std)} + V_{m(std)}}$$

$V_{wc(std)}$ = 1.165 dscf $V_{m(std)}$ = 77.348 wscf

B_{ws} = **0.015**

Average Duct Velocity

$$V_s = 85.49 \times C_p \times \text{Sqrt } \Delta P \text{ (avg)} \times (T_s/(P_s \times M_s))^{1/2}$$

Where:

V_s = Average velocity of effluent gas (ft/sec)

C_p = Pitot calibration coefficient (dimensionless)

Sqrt ΔP (avg) = Average of the square roots of DP's at all traverse points

C_p = 0.840 Sqrt ΔP (avg) = 0.430

T_s = 534.0 °R P_s = 29.16 "Hg

M_s = 28.68 lb/lb-mole

V_s = 24.70 ft/sec

Method 2 Volumetric Flow Rate (Actual Basis)

$$Q = V_s \times A \times 60$$

Where:

Q = Effluent gas volumetric flow rate at actual conditions (ft^3/min)

A = Cross-sectional area of duct at sample location (ft^2)

V_s = 24.70 ft/sec A = 4.238 ft^2

Q = 6,281 cfm

Method 2 Volumetric Flow Rate (Standard Basis)

$$Q_{std} = \frac{T_{std} \times Q \times P_s}{T_s \times 29.92}$$

Where:

Q_{std} = Effluent gas volumetric flow rate corrected to 29.92 in. Hg and 528°R (ft3/min)

Q = 6281 cfm P_s = 29.16 "Hg

T_s = 534.0 °R

Q_{std} = 6,052 scfm

© 2016 TRC Environmental Corp.

Company:	Elkhart Brass	**Run:**	1
Plant:	Elkhart, IN	**Test Date:**	5/11/2016
Unit:	Melt 1		
Test Location:	Stack		

Method 2 Volumetric Flow Rate (Standard Dry Basis)

$$Q_{std(dry)} = Q_{std} \times (1 - B_{ws})$$

Where:

$Q_{std(dry)}$ = Effluent gas volumetric flow rate corrected to 29.92 in. Hg and 528°R (ft3/min, dry basis)

Q_{std} = 6052 scfm *Bws* = 0.015

$Q_{std(dry)}$ = 5,963 dscfm

Isokinetic Variation:

$$I = \frac{0.0945 \times T_s \times V_{m(std)} \times 528}{V_s \times \theta \times A_n \times P_s \times (1-Bws) \times T_{std}}$$

Where:

I = Percent of isokinetic sampling (dimensionless)

θ = Total sample collection time (min)

A_n = Cross-sectional area of nozzle (ft^2)

T_s =	534.0	°R	$V_{m(std)}$ =	77.348	dscf
V_s =	24.703	ft/sec	θ =	120.0	min
P_s =	29.16	"Hg	A_n =	0.000478	ft^2

B_{ws} = 0.015

I = 95.9 %

PM Concentration - example for filterable only:

$$C_s = \frac{m_n \times 0.01543}{V_{m(std)}}$$

Where:

C_s = Particulate matter concentration (grains/dry standard ft^3)

m_n = Net mass of particulate matter collected (mg)

m_n = 35.1 mg $V_{m(std)}$ = 77.348 dscf

C_s = 0.00700 gr/dscf

© 2016 TRC Environmental Corp.

Company:	Elkhart Brass	**Run:**	1
Plant:	Elkhart, IN	**Test Date:**	5/11/2016
Unit:	Melt 1		
Test Location:	Stack		

PM Emission Rate Based on Method 2 Volumetric Flow Rate

$$ER_{M2} = \frac{C_s \times Q_{std(dry)} \times 60}{7000}$$

Where:

ER_{M2} = Particulate matter emission rate calculated using Method 2 volumetric flow rate (lb/hr)

7000 = grains per pound

C_s = 0.0070 gr/dscf $Q_{std(dry)}$ = 5963 dscf/min

ER_{M2} = 0.36 lb/hr

© 2016 TRC Environmental Corp.

TRC

Isokinetic Test Support Data

Company:	Elkhart Brass	Project#:	253282
Plant:	Elkhart, IN	Test Method(s):	5
Unit ID:	Melt 1	Test Run #:	1
Location:	Stack	Test Date(s):	5/11/2016

Console Operator:	G. Rock	Unit Operating Mode:	Normal
Console ID:	E21	Duct Shape/Area:	Round / 4.24 ft^2
Meter Y:	0.992	Fuel Type:	
Orifice $\Delta H_{@i}$:	1.862	F_d Factor:	dscf/MMBtu
Pitot Tube ID:	776	F_c Factor:	scf/MMBtu
Cal. coefficient (C_p):	0.84	Fuel heat content:	Btu /
Probe Liner Material:	Glass	Process/fuel flow rate:	/ hr
Nozzle Material:	Inconel	Soot blown?	N/A
Nozzle Diameter (D_n):	0.296 in	Duration:	N/A min

Sample collection time

Total # of points:	24	
Target Sample time/point:	5.0	min
Target run duration:	120.0	min
Barometric Pressure (P_{bar}):	29.17	in Hg
Stack Static Pressure (P_g):	-0.18	in H2O
Stack Pressure (P_s):	29.16	in Hg

Imp #	Contents	Tare wt. (grams)	Final wt: (grams)
1	H_2O	736.9	743.1
2	H_2O	733.3	735.3
3	Empty	593.3	595.1
4	Silica Gel	785.0	799.7
		Net grams (M_{H2O}):	24.7

Leak Checks

Pre-Test Train Leak Check:	0.004	CFM @ 14	"Hg
Pre-Test Pitot Leak Check:	Pass	(Pass or Fail)	
Post-Test Train Leak Rate:	0.003	CFM @ 7	"Hg
Post-Test Pitot Leak Check:	Pass	(Pass or Fail)	
Pump/Orifice Leak Check:	Pass	(Pass or Fail)	
Filter/Thimble ID:	9364		
Tare Weight:	0.9556	grams	

Fixed Gas Analysis:

CO_2:	0.0	%vol
O_2:	20.9	%vol
N_2:	79.1	%vol

Description of Filter and Front Half Rinses:

Description of Impinger liquid:

General Comments:

© 2016 TRC Environmental Corp.

AM-EMT-15 Rev. 35.4
1/6/2016

TRC

Isokinetic Test - Processed Traverse Data

Company:	Elkhart Brass	**Project #:**	253282	**Test Date:**	5/11/2016
Plant:	Elkhart, IN	**Method(s):**	5	**X-Factor:**	8.249
Unit:	Melt 1	**Run #:**	1	**Minutes/pt:**	5
Location:	Stack				

Port & Point ID	Clock Time	Meter Volume (V_m) ft^3	ΔP ("H_2O)	Stack (Ts) °F	Dry Gas Meter Inlet (T_{min}) °F	Dry Gas Meter Outlet (T_{mout}) °F	Orifice ΔH ("H_2O)	Sample Vacuum ("Hg)
1-1	7:20:00	348.264	0.17	69	61	60	1.40	2.0
2	7:25:00	351.5	0.17	69	62	61	1.40	2.0
3	7:30:00	354.7	0.18	69	62	61	1.50	2.0
4	7:35:00	358	0.17	69	64	61	1.40	2.0
5	7:40:00	361.2	0.16	73	66	61	1.30	2.0
6	7:45:00	364.3	0.14	69	68	62	1.20	2.0
7	7:50:00	367.25	0.15	69	69	62	1.20	2.0
8	7:55:00	370.2	0.18	70	69	62	1.50	2.0
9	8:00:00	373.53	0.21	69	70	63	1.70	2.0
10	8:05:00	377.1	0.23	71	72	64	1.90	2.0
11	8:10:00	380.75	0.23	69	73	65	1.90	2.0
12	8:15:00	384.5	0.20	74	72	66	1.65	2.0
	8:20:00	388						
2-1	9:30:00	388.268	0.18	71	72	71	1.50	2.0
2	9:35:00	391.6	0.18	76	73	71	1.50	2.0
3	9:40:00	394.95	0.18	73	75	71	1.50	2.0
4	9:45:00	398.3	0.18	72	76	72	1.50	2.0
5	9:50:00	400.6	0.15	79	77	72	1.25	2.0
6	9:55:00	403.8	0.15	81	78	73	1.25	2.0
7	10:00:00	406.8	0.18	80	78	73	1.50	2.0
8	10:05:00	410.1	0.21	80	78	73	1.80	2.0
9	10:10:00	413.73	0.23	82	80	73	1.90	2.0
10	10:15:00	417.5	0.23	80	80	73	1.90	2.0
11	10:20:00	421.26	0.21	81	80	73	1.70	2.0
12	10:25:00	424.83	0.20	81	80	73	1.70	2.0
	10:30:00	428.472						

Run Times:		V_m, ft^3	Ave. ΔP	T_s, °F	T_m, °F		ΔH	Max. Vac.
Start	7:20	79.940	0.19	74.0	72.3	67.3	1.544	2
End	10:30		Ave. √ΔP	T_s, °R	Ave. T_m, °R			
			0.43	534.0	529.8			

Comments/Notes:

© 2016 TRC Environmental Corp.

AM-EMT-15 Rev. 35.4
1/6/2016

TRC

Isokinetic Test Support Data

Company:	Elkhart Brass	Project#:	253282
Plant:	Elkhart, IN	Test Method(s):	5
Unit ID:	Melt 1	Test Run #:	2
Location:	Stack	Test Date(s):	5/11/2016

Console Operator:	G. Rock	Unit Operating Mode:	Normal
Console ID:	E21	Duct Shape/Area:	Round / 4.24 ft^2
Meter Y:	0.992	Fuel Type:	
Orifice $\Delta H_{@i}$:	1.862	F_d Factor:	dscf/MMBtu
Pitot Tube ID:	776	F_c Factor:	scf/MMBtu
Cal. coefficient (C_p):	0.84	Fuel heat content:	Btu /
Probe Liner Material:	Glass	Process/fuel flow rate:	/ hr
Nozzle Material:	Inconel	Soot blown?	N/A
Nozzle Diameter (D_n):	0.296 in	Duration:	N/A min

Sample collection time		
Total # of points:	24	
Target Sample time/point:	5.0	min
Target run duration:	120.0	min
Barometric Pressure (P_{bar}):	29.20	in Hg
Stack Static Pressure (P_g):	-0.80	in H2O
Stack Pressure (P_s):	29.14	in Hg

Imp #	Contents	Tare wt. (grams)	Final wt: (grams)
1	H20	743.1	755.1
2	H20	735.3	738.0
3	Empty	595.1	596.8
4	Silica Gel	799.7	811.6
		Net grams (M_{H20}):	28.3

Leak Checks

Pre-Test Train Leak Check:	0.004	CFM @ 7 "Hg
Pre-Test Pitot Leak Check:	Pass	(Pass or Fail)
Post-Test Train Leak Rate:	0.005	CFM @ 5 "Hg
Post-Test Pitot Leak Check:	Pass	(Pass or Fail)
Pump/Orifice Leak Check:	Pass	(Pass or Fail)
Filter/Thimble ID:	9468	
Tare Weight:	0.6487	grams

Fixed Gas Analysis:

CO_2:	0.0	%vol
O_2:	20.9	%vol
N_2:	79.1	%vol

Description of Filter and Front Half Rinses:

Description of Impinger liquid:

General Comments:

© 2016 TRC Environmental Corp.

AM-EMT-15 Rev. 35.4
1/6/2016

TRC

Isokinetic Test - Processed Traverse Data

Company:	Elkhart Brass	**Project #:**	253282	**Test Date:**	5/11/2016
Plant:	Elkhart, IN	**Method(s):**	5	**X-Factor:**	8.249
Unit:	Melt 1	**Run #:**	2	**Minutes/pt:**	5
Location:	Stack				

Port & Point ID	Clock Time	Meter Volume (V_m) ft^3	ΔP ("H_2O)	Stack (Ts) °F	Dry Gas Meter Inlet (T_{min}) °F	Dry Gas Meter Outlet (T_{mout}) °F	Orifice ΔH ("H_2O)	Sample Vacuum ("Hg)
1-1	11:30:00	428.728	0.18	76	81	81	1.50	2.0
2	11:35:00	432.12	0.19	78	83	81	1.60	2.0
3	11:40:00	435.6	0.18	77	85	81	1.50	2.0
4	11:45:00	439	0.16	78	85	81	1.40	2.0
5	11:50:00	442.3	0.15	78	85	81	1.30	2.0
6	11:55:00	445.45	0.14	81	85	81	1.20	2.0
7	12:00:00	448.5	0.18	80	87	82	1.60	2.0
8	12:05:00	452	0.20	84	86	82	1.70	2.0
9	12:10:00	455.75	0.22	80	86	82	1.90	2.0
10	12:15:00	459.35	0.22	81	88	82	1.90	2.0
11	12:20:00	463.1	0.23	80	88	82	2.00	2.0
12	12:25:00	467	0.18	82	88	82	1.60	2.0
	12:30:00	470.454						
2-1	12:40:00	471.11	0.18	84	85	84	1.60	2.0
2	12:45:00	474.6	0.18	81	89	84	1.60	2.0
3	12:50:00	478.1	0.18	85	89	84	1.60	2.0
4	12:55:00	481.5	0.17	80	90	86	1.50	2.0
5	13:00:00	484.9	0.16	86	91	86	1.30	2.0
6	13:05:00	488.14	0.14	83	91	86	1.20	2.0
7	13:10:00	491.2	0.15	86	91	86	1.30	2.0
8	13:15:00	494.3	0.17	83	92	87	1.50	2.0
9	13:20:00	497.7	0.21	85	92	87	1.80	2.0
10	13:25:00	501.3	0.23	82	92	87	2.00	2.0
11	13:30:00	505.25	0.23	82	92	86	2.00	2.0
12	13:35:00	509.15	0.21	82	92	86	1.80	2.0
	13:40:00	512.867						

Run Times:		V_m, ft^3	Ave. ΔP	T_s, °F	T_m, °F		ΔH	Max. Vac.
Start	11:30	83.483	0.19	81.4	88.0	83.6	1.60	2
End	13:40		Ave. √ΔP	T_s, °R	Ave. T_m, °R			
			0.43	541.4	545.8			

Comments/Notes:

AM-EMT-15 Rev. 35.4
1/6/2016

© 2016 TRC Environmental Corp.

TRC

Isokinetic Test Support Data

Company:	Elkhart Brass	Project#:	253282
Plant:	Elkhart, IN	Test Method(s):	5
Unit ID:	Melt 1	Test Run #:	3
Location:	Stack	Test Date(s):	5/11/2016

Console Operator:	G. Rock	Unit Operating Mode:	Normal
Console ID:	E21	Duct Shape/Area:	Round / 4.24 ft^2
Meter Y:	0.992	Fuel Type:	
Orifice $\Delta H_{@i}$:	1.862	F_d Factor:	dscf/MMBtu
Pitot Tube ID:	776	F_c Factor:	scf/MMBtu
Cal. coefficient (C_p):	0.84	Fuel heat content:	Btu /
Probe Liner Material:	Glass	Process/fuel flow rate:	/ hr
Nozzle Material:	Inconel	Soot blown?	N/A
Nozzle Diameter (D_n):	0.296 in	Duration:	N/A min

Sample collection time		
Total # of points:	24	
Target Sample time/point:	5.0	min
Target run duration:	120.0	min
Barometric Pressure (P_{bar}):	29.20	in Hg
Stack Static Pressure (P_g):	-0.80	in H2O
Stack Pressure (P_s):	29.14	in Hg

Imp #	Contents	Tare wt. (grams)	Final wt: (grams)
1	H20	755.1	767.8
2	H20	738.0	742.3
3	Empty	596.8	599.4
4	Silica Gel	807.5	821.1
		Net grams (M_{H20}):	33.2

Leak Checks

Pre-Test Train Leak Check:	0.001	CFM @ 5 "Hg
Pre-Test Pitot Leak Check:	Pass	(Pass or Fail)
Post-Test Train Leak Rate:	0.002	CFM @ 5 "Hg
Post-Test Pitot Leak Check:	Pass	(Pass or Fail)
Pump/Orifice Leak Check:	Pass	(Pass or Fail)
Filter/Thimble ID:	9470	
Tare Weight:	0.6566	grams

Fixed Gas Analysis:

CO_2:	0.0	%vol
O_2:	20.9	%vol
N_2:	79.1	%vol

Description of Filter and Front Half Rinses:

0

Description of Impinger liquid:

General Comments:

© 2016 TRC Environmental Corp.

AM-EMT-15 Rev. 35.4
1/6/2016

TRC

Isokinetic Test - Processed Traverse Data

Company:	Elkhart Brass	**Project #:**	253282	**Test Date:**	5/11/2016
Plant:	Elkhart, IN	**Method(s):**	5	**X-Factor:**	8.249
Unit:	Melt 1	**Run #:**	3	**Minutes/pt:**	5
Location:	Stack				

Port & Point ID	Clock Time	Meter Volume (V_m) ft^3	ΔP ("H_2O)	Stack (Ts) °F	Dry Gas Meter Inlet (T_{min}) °F	Dry Gas Meter Outlet (T_{mout}) °F	Orifice ΔH ("H_2O)	Sample Vacuum ("Hg)
1-1	14:40:00	513.086	0.17	82	88	88	1.50	2.0
2	14:45:00	516.5	0.17	83	88	87	1.50	2.0
3	14:50:00	519.85	0.18	81	90	87	1.50	2.0
4	14:55:00	523.25	0.17	85	91	87	1.50	2.0
5	15:00:00	526.66	0.16	82	91	87	1.40	2.0
6	15:05:00	529.96	0.14	80	92	88	1.20	2.0
7	15:10:00	533	0.15	79	92	88	1.30	2.0
8	15:15:00	536.11	0.18	79	92	88	1.60	2.0
9	15:20:00	539.6	0.21	80	92	88	1.90	2.0
10	15:25:00	543.4	0.23	79	93	88	2.00	2.0
11	15:30:00	547.32	0.22	86	93	88	1.90	2.0
12	15:35:00	551.11	0.21	84	93	88	1.80	2.0
	15:40:00	554.836						
2-1	15:55:00	555.095	0.17	84	89	88	1.50	2.0
2	16:00:00	558.5	0.18	84	91	88	1.60	2.0
3	16:05:00	561.95	0.16	84	91	88	1.40	2.0
4	16:10:00	565.22	0.17	85	92	88	1.50	2.0
5	16:15:00	568.66	0.14	84	92	88	1.20	2.0
6	16:20:00	571.7	0.13	87	92	88	1.10	2.0
7	16:25:00	574.53	0.17	89	92	88	1.40	2.0
8	16:30:00	577.83	0.20	88	92	88	1.70	2.0
9	16:35:00	581.43	0.22	88	92	88	1.80	2.0
10	16:40:00	585.14	0.22	91	92	88	1.80	2.0
11	16:45:00	588.82	0.19	86	92	88	1.60	2.0
12	16:50:00	592.35	0.17	88	92	88	1.40	2.0
	16:55:00	595.618						

Run Times:		V_m, ft^3	Ave. ΔP	T_s, °F	T_m, °F		ΔH	Max. Vac.
Start	14:40	82.273	0.18	84.1	91.4	87.8	1.5	2
End	16:55		Ave. √ΔP	T_s, °R	Ave. T_m, °R			
			0.42	544.1	549.6			

Comments/Notes:

© 2016 TRC Environmental Corp.

AM-EMT-15 Rev. 35.4
1/6/2016

TRC

Isokinetic Test Support Data

Company:	Elkhart Brass	Project#:	253282
Plant:	Elkhart, IN	Test Method(s):	5
Unit ID:	Melt 2	Test Run #:	1
Location:	Stack	Test Date(s):	5/11/2016

Console Operator:	BMC	Unit Operating Mode:	Normal
Console ID:	E53	Duct Shape/Area:	Round / 4.24 ft^2
Meter Y:	0.994	Fuel Type:	
Orifice $\Delta H_{@i}$:	1.613	F_d Factor:	dscf/MMBtu
Pitot Tube ID:	347B	F_c Factor:	scf/MMBtu
Cal. coefficient (C_p):	0.84	Fuel heat content:	Btu /
Probe Liner Material:	Glass	Process/fuel flow rate:	/ hr
Nozzle Material:	Stainless	Soot blown?	N/A
Nozzle Diameter (D_n):	0.298 in	Duration:	N/A min

Sample collection time		
Total # of points:	24	
Target Sample time/point:	5.0	min
Target run duration:	120.0	min
Barometric Pressure (P_{bar}):	29.17	in Hg
Stack Static Pressure (P_g):	-0.18	in H2O
Stack Pressure (P_s):	29.16	in Hg

Imp #	Contents	Tare wt. (grams)	Final wt: (grams)
1	H_20	777.5	788.7
2	H_20	747.2	748.2
3	Empty	637.5	639.0
4	Silica Gel	710.5	719.5
		Net grams (M_{H20}):	22.7

Leak Checks		
Pre-Test Train Leak Check:	0.000	CFM @ 13 "Hg
Pre-Test Pitot Leak Check:	Pass	(Pass or Fail)
Post-Test Train Leak Rate:	0.000	CFM @ 5 "Hg
Post-Test Pitot Leak Check:	Pass	(Pass or Fail)
Pump/Orifice Leak Check:	Pass	(Pass or Fail)
Filter/Thimble ID:	9397	
Tare Weight:	0.9263	grams

Fixed Gas Analysis:

CO_2:	0.0	%vol
O_2:	20.9	%vol
N_2:	79.1	%vol

Description of Filter and Front Half Rinses:

Description of Impinger liquid:

General Comments:

© 2016 TRC Environmental Corp.

AM-EMT-15 Rev. 35.4
1/6/2016

TRC

Isokinetic Test - Processed Traverse Data

Company:	Elkhart Brass	Project #:	253282	Test Date:	5/11/2016
Plant:	Elkhart, IN	Method(s):	5	X-Factor:	7.345
Unit:	Melt 2	Run #:	1	Minutes/pt:	5
Location:	Stack				

Port & Point ID	Clock Time	Meter Volume (V_m) ft^3	ΔP ("H_2O)	Stack (Ts) °F	Dry Gas Meter Inlet (T_{min}) °F	Dry Gas Meter Outlet (T_{mout}) °F	Orifice ΔH ("H_2O)	Sample Vacuum ("Hg)
1-1	7:20:00	958.015	0.28	69	62	60	2.00	2.0
1-2	7:25:00	962.26	0.29	69	65	61	2.10	2.0
1-3	7:30:00	966.65	0.30	70	69	61	2.20	2.0
1-4	7:35:00	971.26	0.30	71	73	62	2.20	2.0
1-5	7:40:00	975.87	0.28	69	74	63	2.10	2.0
1-6	7:45:00	980.24	0.24	70	75	64	1.80	2.0
1-7	7:50:00	984.51	0.25	69	76	65	1.80	2.0
1-8	7:55:00	988.62	0.24	70	76	66	1.80	2.0
1-9	8:00:00	992.84	0.22	70	77	67	1.60	2.0
1-10	8:05:00	996.79	0.19	70	78	68	1.40	1.5
1-11	8:10:00	1000.66	0.10	69	78	68	0.74	1.0
1-12	8:15:00	1003.67	0.10	60	77	69	0.75	1.0
	8:20:00	1006.361						
2-1	9:30:00	1006.713	0.33	69	74	73	2.40	2.0
2-2	9:35:00	1011.49	0.33	73	76	73	2.40	2.0
2-3	9:40:00	1016.08	0.34	70	81	74	2.50	2.0
2-4	9:45:00	1021.05	0.34	72	84	74	2.50	2.0
2-5	9:50:00	1026.15	0.30	72	86	75	2.20	2.0
2-6	9:55:00	1030.88	0.28	74	86	76	2.10	2.0
2-7	10:00:00	1035.37	0.22	78	86	77	1.60	1.5
2-8	10:05:00	1039.49	0.20	77	86	77	1.50	1.5
2-9	10:10:00	1043.43	0.17	77	86	77	1.30	1.5
2-10	10:15:00	1047.13	0.12	77	86	78	0.89	1.0
2-11	10:20:00	1050.25	0.12	79	85	78	0.89	1.0
2-12	10:25:00	1053.32	0.09	74	85	79	0.67	1.0
	10:30:00	1056.082						

Run Times:		V_m, ft^3	Ave. ΔP	T_s, °F	T_m, °F		ΔH	Max. Vac.
Start	7:20	97.715	0.23	71.6	78.4	70.2	1.727	2
End	10:30		Ave. √ΔP	T_s, °R	Ave. T_m, °R			
			0.48	531.6	534.3			
Comments/Notes:								

AM-EMT-15 Rev. 35.4
1/6/2016

© 2016 TRC Environmental Corp.

TRC

Isokinetic Test Support Data

Company:	Elkhart Brass	Project#:	253282
Plant:	Elkhart, IN	Test Method(s):	5
Unit ID:	Melt 2	Test Run #:	2
Location:	Stack	Test Date(s):	5/11/2016

Console Operator:	BMC	Unit Operating Mode:	Normal
Console ID:	E53	Duct Shape/Area:	Round / 4.24 ft^2
Meter Y:	0.994	Fuel Type:	
Orifice $\Delta H_{@i}$:	1.613	F_d Factor:	dscf/MMBtu
Pitot Tube ID:	347B	F_c Factor:	scf/MMBtu
Cal. coefficient (C_p):	0.84	Fuel heat content:	Btu /
Probe Liner Material:	Glass	Process/fuel flow rate:	/ hr
Nozzle Material:	Stainless	Soot blown?	N/A
Nozzle Diameter (D_n):	0.298 in	Duration:	N/A min

Sample collection time		
Total # of points:	24	
Target Sample time/point:	5.0	min
Target run duration:	120.0	min
Barometric Pressure (P_{bar}):	29.20	in Hg
Stack Static Pressure (P_g):	-0.18	in H2O
Stack Pressure (P_s):	29.19	in Hg

Imp #	Contents	Tare wt. (grams)	Final wt: (grams)
1	H20	788.7	804.3
2	H20	748.2	750.9
3	Empty	639.0	640.3
4	Silica Gel	719.5	723.0
		Net grams (M_{H20}):	23.1

Leak Checks			
Pre-Test Train Leak Check:	0.000	CFM @ 13	"Hg
Pre-Test Pitot Leak Check:	Pass	(Pass or Fail)	
Post-Test Train Leak Rate:	0.000	CFM @ 5	"Hg
Post-Test Pitot Leak Check:	Pass	(Pass or Fail)	
Pump/Orifice Leak Check:	Pass	(Pass or Fail)	
Filter/Thimble ID:	9400		
Tare Weight:	0.9154	grams	

Fixed Gas Analysis:

CO_2:	0.0	%vol
O_2:	20.9	%vol
N_2:	79.1	%vol

Description of Filter and Front Half Rinses:

Description of Impinger liquid:

General Comments:

© 2016 TRC Environmental Corp.

AM-EMT-15 Rev. 35.4
1/6/2016

TRC

Isokinetic Test - Processed Traverse Data

Company:	Elkhart Brass	Project #:	253282	Test Date:	5/11/2016
Plant:	Elkhart, IN	Method(s):	5	X-Factor:	7.345
Unit:	Melt 2	Run #:	2	Minutes/pt:	5
Location:	Stack				

Port & Point ID	Clock Time	Meter Volume (V_m) ft^3	ΔP ("H_2O)	Stack (Ts) °F	Dry Gas Meter Inlet (T_{min}) °F	Dry Gas Meter Outlet (T_{mout}) °F	Orifice ΔH ("H_2O)	Sample Vacuum ("Hg)
1-1	11:30:00	56.625	0.35	74	83	83	2.60	2.0
1-2	11:35:00	61.64	0.35	76	86	83	2.60	2.0
1-3	11:40:00	66.66	0.36	76	89	83	2.70	2.5
1-4	11:45:00	71.83	0.35	77	92	84	2.60	2.5
1-5	11:50:00	76.88	0.31	80	93	84	2.30	2.0
1-6	11:55:00	81.59	0.28	79	92	84	2.10	2.0
1-7	12:00:00	86.11	0.22	80	93	85	1.60	1.5
1-8	12:05:00	90.19	0.20	80	93	86	1.50	1.5
1-9	12:10:00	94.13	0.19	79	92	86	1.40	1.5
1-10	12:15:00	97.98	0.16	78	92	86	1.20	1.5
1-11	12:20:00	101.54	0.14	80	92	86	1.10	1.5
1-12	12:25:00	104.88	0.08	80	92	87	0.60	1.0
	12:30:00	107.541						
2-1	12:40:00	107.915	0.31	86	88	87	2.30	2.0
2-2	12:45:00	112.72	0.32	80	91	87	2.40	2.5
2-3	12:50:00	117.62	0.33	81	95	87	2.50	2.5
2-4	12:55:00	122.63	0.33	83	96	88	2.50	2.5
2-5	13:00:00	126.64	0.31	82	97	89	2.30	2.0
2-6	13:05:00	132.51	0.30	82	97	89	2.30	2.0
2-7	13:10:00	137.31	0.26	83	98	90	2.00	2.0
2-8	13:15:00	141.79	0.25	82	98	91	1.90	2.0
2-9	13:20:00	146.22	0.23	83	98	91	1.70	2.0
2-10	13:25:00	150.33	0.22	83	98	91	1.70	2.0
2-11	13:30:00	154.49	0.20	84	98	92	1.50	2.0
2-12	13:35:00	158.51	0.20	80	98	92	1.50	2.0
	13:40:00	162.459						

Run Times:		V_m, ft^3	Ave. ΔP	T_s, °F	T_m, °F		ΔH	Max. Vac.
Start	11:30	105.460	0.26	80.3	93.4	87.1	1.95	2.5
End	13:40		Ave. √ΔP	T_s, °R	Ave. T_m, °R			
			0.50	540.3	550.3			
Comments/Notes:								

© 2016 TRC Environmental Corp.

AM-EMT-15 Rev. 35.4
1/6/2016

TRC

Isokinetic Test Support Data

Company:	Elkhart Brass	Project#:	253282
Plant:	Elkhart, IN	Test Method(s):	5
Unit ID:	Melt 2	Test Run #:	3
Location:	Stack	Test Date(s):	5/11/2016

Console Operator:	BMC	Unit Operating Mode:	Normal
Console ID:	E53	Duct Shape/Area:	Round / 4.24 ft^2
Meter Y:	0.994	Fuel Type:	
Orifice $\Delta H_{@i}$:	1.613	F_d Factor:	dscf/MMBtu
Pitot Tube ID:	347B	F_c Factor:	scf/MMBtu
Cal. coefficient (C_p):	0.84	Fuel heat content:	Btu /
Probe Liner Material:	Glass	Process/fuel flow rate:	/ hr
Nozzle Material:	Stainless	Soot blown?	N/A
Nozzle Diameter (D_n):	0.298 in	Duration:	N/A min

Sample collection time		
Total # of points:	24	
Target Sample time/point:	5.0	min
Target run duration:	120.0	min
Barometric Pressure (P_{bar}):	29.20	in Hg
Stack Static Pressure (P_g):	-0.18	in H2O
Stack Pressure (P_s):	29.19	in Hg

Imp #	Contents	Tare wt. (grams)	Final wt: (grams)
1	H20	804.3	822.4
2	H20	750.9	754.4
3	Empty	640.3	640.5
4	Silica Gel	723.0	725.4
		Net grams (M_{H20}):	24.2

Leak Checks

Pre-Test Train Leak Check:	0.000	CFM @ 13	"Hg
Pre-Test Pitot Leak Check:	Pass	(Pass or Fail)	
Post-Test Train Leak Rate:	0.000	CFM @ 5	"Hg
Post-Test Pitot Leak Check:	Pass	(Pass or Fail)	
Pump/Orifice Leak Check:	Pass	(Pass or Fail)	
Filter/Thimble ID:	9471		
Tare Weight:	0.6527	grams	

Fixed Gas Analysis:

CO_2:	0.0	%vol
O_2:	20.9	%vol
N_2:	79.1	%vol

Description of Filter and Front Half Rinses:

Description of Impinger liquid:

General Comments:

© 2016 TRC Environmental Corp.

TRC

Isokinetic Test - Processed Traverse Data

Company:	Elkhart Brass	Project #:	253282	Test Date:	5/11/2016
Plant:	Elkhart, IN	Method(s):	5	X-Factor:	7.345
Unit:	Melt 2	Run #:	3	Minutes/pt:	5
Location:	Stack				

Port & Point ID	Clock Time	Meter Volume (V_m) ft^3	ΔP ("H_2O)	Stack (Ts) °F	Dry Gas Meter Inlet (T_{min}) °F	Dry Gas Meter Outlet (T_{mout}) °F	Orifice ΔH ("H_2O)	Sample Vacuum ("Hg)
1-1	14:40:00	162.915	0.31	81	89	89	2.30	1.5
1-2	14:45:00	167.72	0.34	82	92	89	2.50	1.5
1-3	14:50:00	172.67	0.33	82	95	90	2.50	1.5
1-4	14:55:00	177.72	0.31	82	97	90	2.30	1.5
1-5	15:00:00	182.57	0.29	81	98	90	2.20	1.5
1-6	15:05:00	187.14	0.24	80	98	90	1.80	1.0
1-7	15:10:00	191.46	0.26	81	98	91	2.00	1.0
1-8	15:15:00	195.91	0.26	83	98	91	2.00	1.0
1-9	15:20:00	200.37	0.22	81	98	91	1.70	1.0
1-10	15:25:00	204.49	0.21	84	97	92	1.60	1.0
1-11	15:30:00	208.57	0.19	81	97	92	1.40	1.0
1-12	15:35:00	212.41	0.18	80	97	92	1.40	1.0
	15:40:00	216.212						
2-1	15:55:00	216.516	0.36	82	93	91	2.70	2.0
2-2	16:00:00	221.71	0.36	83	93	91	2.70	2.0
2-3	16:05:00	226.87	0.35	82	96	91	2.60	2.0
2-4	16:10:00	231.98	0.35	85	97	91	2.60	2.0
2-5	16:15:00	237.06	0.30	84	98	91	2.30	1.5
2-6	16:20:00	241.86	0.29	83	97	91	2.20	1.5
2-7	16:25:00	246.58	0.22	81	98	91	1.70	1.0
2-8	16:30:00	250.74	0.20	81	97	91	1.50	1.0
2-9	16:35:00	254.73	0.18	80	97	91	1.40	1.0
2-10	16:40:00	258.57	0.14	84	98	91	1.10	1.0
2-11	16:45:00	261.95	0.11	83	96	92	0.82	1.0
2-12	16:50:00	264.89	0.10	83	96	91	0.75	1.0
	16:55:00	267.761						

Run Times:		V_m, ft^3	Ave. ΔP	T_s, °F	T_m, °F		ΔH	Max. Vac.
Start	14:40	104.542	0.25	82.0	96.3	90.8	1.9	2
End	16:55		Ave. √ΔP	T_s, °R	Ave. T_m, °R			
			0.50	542.0	553.5			
Comments/Notes:								

© 2016 TRC Environmental Corp.

AM-EMT-15 Rev. 35.4
1/6/2016

TRC

Isokinetic Test Support Data

Company:	Elkhart Brass	Project#:	253282
Plant:	Elkhart, IN	Test Method(s):	5
Unit ID:	Tap Hood	Test Run #:	1
Location:	Stack	Test Date(s):	5/11/2016

Console Operator:	Cameron Dillion	Unit Operating Mode:	Normal
Console ID:	E19	Duct Shape/Area:	Round / 4.91 ft^2
Meter Y:	0.991	Fuel Type:	
Orifice $\Delta H_{@i}$:	1.85	F_d Factor:	dscf/MMBtu
Pitot Tube ID:	801	F_c Factor:	scf/MMBtu
Cal. coefficient (C_p):	0.84	Fuel heat content:	Btu /
Probe Liner Material:	Glass	Process/fuel flow rate:	/ hr
Nozzle Material:	Stainless Steel	Soot blown?	N/A
Nozzle Diameter (D_n):	0.268 in	Duration:	N/A min

Sample collection time		
Total # of points:	24	
Target Sample time/point:	5.0	min
Target run duration:	120.0	min
Barometric Pressure (P_{bar}):	29.17	in Hg
Stack Static Pressure (P_g):	-0.15	in H2O
Stack Pressure (P_s):	29.16	in Hg

Imp #	Contents	Tare wt. (grams)	Final wt: (grams)
1	H_2O	666.7	676.8
2	H_2O	650.3	650.8
3	Empty	588.0	589.4
4	Silica Gel	761.1	776.0
		Net grams (M_{H2O}):	26.9

Leak Checks

Pre-Test Train Leak Check:	0.000	CFM @ 10 "Hg
Pre-Test Pitot Leak Check:	Pass	(Pass or Fail)
Post-Test Train Leak Rate:	0.000	CFM @ 5 "Hg
Post-Test Pitot Leak Check:	Pass	(Pass or Fail)
Pump/Orifice Leak Check:	Pass	(Pass or Fail)
Filter/Thimble ID:	9365	
Tare Weight:	0.9511	grams

Fixed Gas Analysis:

CO_2:	0.0	%vol
O_2:	20.9	%vol
N_2:	79.1	%vol

Description of Filter and Front Half Rinses:

Description of Impinger liquid:

General Comments:

© 2016 TRC Environmental Corp.

AM-EMT-15 Rev. 35.4
1/6/2016

TRC

Isokinetic Test - Processed Traverse Data

Company:	Elkhart Brass	**Project #:**	253282	**Test Date:**	5/11/2016
Plant:	Elkhart, IN	**Method(s):**	5	**X-Factor:**	5.508
Unit:	Tap Hood	**Run #:**	1	**Minutes/pt:**	5
Location:	Stack				

Port & Point ID	Clock Time	Meter Volume (V_m) ft^3	ΔP ("H_2O)	Stack (Ts) °F	Dry Gas Meter Inlet (T_{min}) °F	Dry Gas Meter Outlet (T_{mout}) °F	Orifice ΔH ("H_2O)	Sample Vacuum ("Hg)
A-1	7:20:00	393.415	0.26	74	61	59	1.40	3.0
A-2	7:25:00	396.791	0.27	74	64	60	1.50	3.0
A-3	7:30:00	400.152	0.29	74	67	60	1.60	3.0
A-4	7:35:00	403.682	0.29	74	70	61	1.60	3.0
A-5	7:40:00	407.211	0.28	75	72	62	1.50	3.0
A-6	7:45:00	410.792	0.28	74	73	63	1.50	3.0
A-7	7:50:00	414.208	0.26	75	74	64	1.40	3.0
A-8	7:55:00	417.543	0.30	74	75	65	1.60	3.0
A-9	8:00:00	421.116	0.31	74	76	66	1.70	3.0
A-10	8:05:00	424.843	0.29	75	77	67	1.60	3.0
A-11	8:10:00	428.564	0.25	74	78	68	1.40	3.0
A-12	8:15:00	431.922	0.26	75	78	69	1.40	3.0
	8:20:00	435.342						
B-1	9:30:00	435.594	0.27	76	72	70	1.50	3.0
B-2	9:35:00	439.151	0.27	73	72	70	1.50	3.0
B-3	9:40:00	442.663	0.28	76	73	70	1.50	3.0
B-4	9:45:00	446.131	0.27	76	75	71	1.50	3.0
B-5	9:50:00	449.575	0.26	77	76	71	1.40	3.0
B-6	9:55:00	453.012	0.25	77	77	72	1.40	3.0
B-7	10:00:00	456.353	0.23	73	78	72	1.30	3.0
B-8	10:05:00	459.671	0.25	75	79	72	1.40	3.0
B-9	10:10:00	463.019	0.27	75	80	73	1.50	3.0
B-10	10:15:00	466.577	0.29	75	80	74	1.60	3.0
B-11	10:20:00	470.13	0.26	74	81	74	1.40	3.0
B-12	10:25:00	473.761	0.22	75	82	75	1.20	3.0
	10:30:00	477.003						

Run Times:		V_m, ft^3	Ave. ΔP	T_s, °F	T_m, °F		ΔH	Max. Vac.
Start	7:20	83.336	0.27	74.8	74.6	67.8	1.475	3
End	10:30		Ave. √ΔP	T_s, °R	Ave. T_m, °R			
			0.52	534.8	531.2			
Comments/Notes:								

© 2016 TRC Environmental Corp.

AM-EMT-15 Rev. 35.4
1/6/2016

TRC

Isokinetic Test Support Data

Company:	Elkhart Brass	Project#:	253282
Plant:	Elkhart, IN	Test Method(s):	5
Unit ID:	Tap Hood	Test Run #:	2
Location:	Stack	Test Date(s):	5/11/2016

Console Operator:	Cameron Dillion	Unit Operating Mode:	Normal
Console ID:	E19	Duct Shape/Area:	Round / 4.91 ft^2
Meter Y:	0.991	Fuel Type:	
Orifice $\Delta H_{@i}$:	1.85	F_d Factor:	dscf/MMBtu
Pitot Tube ID:	801	F_c Factor:	scf/MMBtu
Cal. coefficient (C_p):	0.84	Fuel heat content:	Btu /
Probe Liner Material:	Glass	Process/fuel flow rate:	/ hr
Nozzle Material:	Stainless Steel	Soot blown?	N/A
Nozzle Diameter (D_n):	0.268 in	Duration:	N/A min

Sample collection time

Total # of points:	24	
Target Sample time/point:	5.0	min
Target run duration:	120.0	min
Barometric Pressure (P_{bar}):	29.20	in Hg
Stack Static Pressure (P_g):	-0.15	in H2O
Stack Pressure (P_s):	29.19	in Hg

Imp #	Contents	Tare wt. (grams)	Final wt: (grams)
1	H20	676.8	687.2
2	H20	650.8	653.5
3	Empty	589.4	590.9
4	Silica Gel	776.0	786.5
		Net grams (M_{H20}):	25.1

Leak Checks

Pre-Test Train Leak Check:	0.000	CFM @ 10 "Hg
Pre-Test Pitot Leak Check:	Pass	(Pass or Fail)
Post-Test Train Leak Rate:	0.000	CFM @ 6 "Hg
Post-Test Pitot Leak Check:	Pass	(Pass or Fail)
Pump/Orifice Leak Check:	Pass	(Pass or Fail)
Filter/Thimble ID:	9469	
Tare Weight:	0.6641	grams

Fixed Gas Analysis:

CO_2:	0.0	%vol
O_2:	20.9	%vol
N_2:	79.1	%vol

Description of Filter and Front Half Rinses:

Description of Impinger liquid:

General Comments:

© 2016 TRC Environmental Corp.

AM-EMT-15 Rev. 35.4
1/6/2016

TRC

Isokinetic Test - Processed Traverse Data

Company:	Elkhart Brass	**Project #:**	253282	**Test Date:**	5/11/2016
Plant:	Elkhart, IN	**Method(s):**	5	**X-Factor:**	5.508
Unit:	Tap Hood	**Run #:**	2	**Minutes/pt:**	5
Location:	Stack				

Port & Point ID	Clock Time	Meter Volume (V_m) ft^3	ΔP ("H_2O)	Stack (Ts) °F	Dry Gas Meter Inlet (T_{min}) °F	Dry Gas Meter Outlet (T_{mout}) °F	Orifice ΔH ("H_2O)	Sample Vacuum ("Hg)
B-1	11:30:00	477.275	0.27	75	79	77	1.50	3.0
B-2	11:35:00	480.812	0.27	75	82	78	1.50	3.0
B-3	11:40:00	484.233	0.28	76	85	79	1.60	3.0
B-4	11:45:00	487.921	0.27	78	86	79	1.50	3.0
B-5	11:50:00	491.513	0.26	77	88	80	1.50	3.0
B-6	11:55:00	494.998	0.24	77	88	80	1.30	3.0
B-7	12:00:00	498.337	0.23	77	88	81	1.30	3.0
B-8	12:05:00	501.633	0.25	78	88	82	1.40	3.0
B-9	12:10:00	505.042	0.27	77	89	82	1.50	3.0
B-10	12:15:00	508.612	0.29	77	89	83	1.60	3.0
B-11	12:20:00	512.487	0.28	78	90	83	1.60	3.0
B-12	12:25:00	515.913	0.26	78	90	84	1.50	3.0
	12:30:00	519.491						
A-1	12:40:00	519.627	0.29	78	87	85	1.60	3.0
A-2	12:45:00	523.283	0.25	81	90	86	1.40	3.0
A-3	12:50:00	526.833	0.29	80	90	86	1.60	3.0
A-4	12:55:00	530.419	0.31	81	90	87	1.70	3.0
A-5	13:00:00	534.043	0.31	79	91	86	1.70	3.0
A-6	13:05:00	538.289	0.30	81	92	87	1.70	3.0
A-7	13:10:00	542.011	0.28	80	92	87	1.60	3.0
A-8	13:15:00	545.412	0.31	82	93	87	1.70	3.0
A-9	13:20:00	549.166	0.32	82	92	87	1.80	3.0
A-10	13:25:00	553.079	0.30	82	93	88	1.70	3.0
A-11	13:30:00	556.832	0.25	81	93	88	1.40	3.0
A-12	13:35:00	560.122	0.22	82	92	88	1.20	3.0
	13:40:00	563.744						

Run Times:		V_m, ft^3	Ave. ΔP	T_s, °F	T_m, °F		ΔH	Max. Vac.
Start	11:30	86.333	0.28	78.8	89.0	83.8	1.54	3
End	13:40		Ave. √ΔP	T_s, °R	Ave. T_m, °R			
			0.52	538.8	546.4			
Comments/Notes:								

© 2016 TRC Environmental Corp.

AM-EMT-15 Rev. 35.4
1/6/2016

TRC

Isokinetic Test Support Data

Company:	Elkhart Brass	Project#:	253282
Plant:	Elkhart, IN	Test Method(s):	5
Unit ID:	Tap Hood	Test Run #:	3
Location:	Stack	Test Date(s):	5/11/2016

Console Operator:	Cameron Dillion	Unit Operating Mode:	Normal
Console ID:	E19	Duct Shape/Area:	Round / 4.91 ft^2
Meter Y:	0.991	Fuel Type:	
Orifice $\Delta H_{@i}$:	1.85	F_d Factor:	dscf/MMBtu
Pitot Tube ID:	801	F_c Factor:	scf/MMBtu
Cal. coefficient (C_p):	0.84	Fuel heat content:	Btu /
Probe Liner Material:	Glass	Process/fuel flow rate:	/ hr
Nozzle Material:	Stainless Steel	Soot blown?	N/A
Nozzle Diameter (D_n):	0.268 in	Duration:	N/A min

Sample collection time		
Total # of points:	24	
Target Sample time/point:	5.0	min
Target run duration:	120.0	min
Barometric Pressure (P_{bar}):	29.20	in Hg
Stack Static Pressure (P_g):	-0.15	in H2O
Stack Pressure (P_s):	29.19	in Hg

Imp #	Contents	Tare wt. (grams)	Final wt: (grams)
1	H20	687.2	700.2
2	H20	653.5	655.3
3	Empty	590.9	592.0
4	Silica Gel	786.5	793.3
		Net grams (M_{H20}):	22.7

Leak Checks		
Pre-Test Train Leak Check:	0.000	CFM @ 10 "Hg
Pre-Test Pitot Leak Check:	Pass	(Pass or Fail)
Post-Test Train Leak Rate:	0.000	CFM @ 6 "Hg
Post-Test Pitot Leak Check:	Pass	(Pass or Fail)
Pump/Orifice Leak Check:	Pass	(Pass or Fail)
Filter/Thimble ID:	9472	
Tare Weight:	0.6658	grams

Fixed Gas Analysis:

CO_2:	0.0	%vol
O_2:	20.9	%vol
N_2:	79.1	%vol

Description of Filter and Front Half Rinses:

Description of Impinger liquid:

General Comments:

© 2016 TRC Environmental Corp.

TRC

Isokinetic Test - Processed Traverse Data

Company:	Elkhart Brass	**Project #:**	253282	**Test Date:**	5/11/2016
Plant:	Elkhart, IN	**Method(s):**	5	**X-Factor:**	5.508
Unit:	Tap Hood	**Run #:**	3	**Minutes/pt:**	5
Location:	Stack				

Port & Point ID	Clock Time	Meter Volume (V_m) ft^3	ΔP ("H_2O)	Stack (Ts) °F	Dry Gas Meter Inlet (T_{min}) °F	Dry Gas Meter Outlet (T_{mout}) °F	Orifice ΔH ("H_2O)	Sample Vacuum ("Hg)
A-1	14:40:00	563.955	0.26	82	81	81	1.40	3.0
A-2	14:45:00	567.511	0.26	82	80	81	1.40	3.0
A-3	14:50:00	570.863	0.28	82	82	81	1.50	3.0
A-4	14:55:00	574.382	0.31	82	83	81	1.70	3.0
A-5	15:00:00	578.139	0.32	82	85	81	1.80	3.0
A-6	15:05:00	582.02	0.31	83	86	81	1.70	3.0
A-7	15:10:00	585.792	0.27	83	87	81	1.50	3.0
A-8	15:15:00	589.362	0.30	82	88	82	1.70	3.0
A-9	15:20:00	593.113	0.31	82	88	82	1.70	3.0
A-10	15:25:00	596.913	0.30	82	88	82	1.70	3.0
A-11	15:30:00	600.668	0.24	82	89	83	1.30	3.0
A-12	15:35:00	603.957	0.24	81	88	83	1.30	3.0
	15:40:00	607.234						
B-1	15:55:00	607.371	0.27	81	85	83	1.50	3.0
B-2	16:00:00	611.008	0.28	81	86	84	1.60	3.0
B-3	16:05:00	614.513	0.27	82	88	83	1.50	3.0
B-4	16:10:00	618.043	0.27	82	88	83	1.50	3.0
B-5	16:15:00	621.579	0.26	82	88	84	1.40	3.0
B-6	16:20:00	625.023	0.25	83	88	84	1.40	3.0
B-7	16:25:00	628.248	0.23	83	88	83	1.30	3.0
B-8	16:30:00	631.322	0.24	85	88	83	1.30	3.0
B-9	16:35:00	635.152	0.26	85	88	83	1.40	3.0
B-10	16:40:00	638.659	0.28	84	88	83	1.60	3.0
B-11	16:45:00	642.288	0.27	84	89	84	1.50	3.0
B-12	16:50:00	645.826	0.25	84	89	84	1.40	3.0
	16:55:00	649.338						

Run Times:		V_m, ft^3	Ave. ΔP	T_s, °F	T_m, °F		ΔH	Max. Vac.
Start	14:40	85.246	0.27	82.5	86.6	82.5	1.5	3
End	16:55		Ave. √ΔP	T_s, °R	Ave. T_m, °R			
			0.52	542.5	544.5			

Comments/Notes:

© 2016 TRC Environmental Corp.

AM-EMT-15 Rev. 35.4
1/6/2016

TRC

Isokinetic Test Support Data

Company:	Elkhart Brass	Project#:	253282
Plant:	Elkhart, IN	Test Method(s):	12
Unit ID:	Melt 1	Test Run #:	1
Location:	Stack	Test Date(s):	5/11/2016

Console Operator:	G. Rock	Unit Operating Mode:	Normal
Console ID:	E20	Duct Shape/Area:	Round / 4.24 ft^2
Meter Y:	1.003	Fuel Type:	
Orifice $\Delta H_{@i}$:	1.611	F_d Factor:	dscf/MMBtu
Pitot Tube ID:	790	F_c Factor:	scf/MMBtu
Cal. coefficient (C_p):	0.84	Fuel heat content:	Btu /
Probe Liner Material:	Glass	Process/fuel flow rate:	/ hr
Nozzle Material:	Inconel	Soot blown?	N/A
Nozzle Diameter (D_n):	0.298 in	Duration:	N/A min

Sample collection time

Total # of points:	24	
Target Sample time/point:	5.0	min
Target run duration:	120.0	min
Barometric Pressure (P_{bar}):	29.17	in Hg
Stack Static Pressure (P_g):	-0.80	in H2O
Stack Pressure (P_s):	29.11	in Hg

Imp #	Contents	Tare wt. (grams)	Final wt: (grams)
1	H_20	736.9	743.1
2	H_20	733.3	735.3
3	Empty	593.3	595.1
4	Silica Gel	785.0	799.7
		Net grams (M_{H20}):	24.7

Leak Checks

Pre-Test Train Leak Check:	0.002	CFM @ 10 "Hg
Pre-Test Pitot Leak Check:	Pass	(Pass or Fail)
Post-Test Train Leak Rate:	0.004	CFM @ 7 "Hg
Post-Test Pitot Leak Check:	Pass	(Pass or Fail)
Pump/Orifice Leak Check:	Pass	(Pass or Fail)
Filter/Thimble ID:		
Tare Weight:		grams

Fixed Gas Analysis:

CO_2:	0.0	%vol
O_2:	20.9	%vol
N_2:	79.1	%vol

Description of Filter and Front Half Rinses:

Description of Impinger liquid:

General Comments:

© 2016 TRC Environmental Corp.

AM-EMT-15 Rev. 35.4
1/6/2016

TRC

Isokinetic Test - Processed Traverse Data

Company:	Elkhart Brass	**Project #:**	253282	**Test Date:**	5/11/2016
Plant:	Elkhart, IN	**Method(s):**	12	**X-Factor:**	7.336
Unit:	Melt 1	**Run #:**	1	**Minutes/pt:**	5
Location:	Stack				

Port & Point ID	Clock Time	Meter Volume (V_m) ft^3	ΔP ("H_2O)	Stack (Ts) °F	Dry Gas Meter Inlet (T_{min}) °F	Dry Gas Meter Outlet (T_{mout}) °F	Orifice ΔH ("H_2O)	Sample Vacuum ("Hg)
1-1	7:20:00	745.793	0.15	69	63	61	1.10	2.0
2	7:25:00	748.9	0.19	68	65	61	1.40	2.0
3	7:30:00	752.35	0.20	69	69	64	1.50	2.0
4	7:35:00	755.9	0.21	67	73	64	1.60	2.0
5	7:40:00	759.5	0.20	71	75	66	1.50	2.0
6	7:45:00	763.05	0.17	68	80	73	1.30	2.0
7	7:50:00	766.35	0.15	67	77	66	1.10	2.0
8	7:55:00	769.47	0.16	70	77	66	1.20	2.0
9	8:00:00	772.73	0.17	68	78	70	1.30	2.0
10	8:05:00	776.08	0.18	69	79	75	1.40	2.0
11	8:10:00	779.65	0.18	69	80	69	1.30	2.0
12	8:15:00	783	0.17	74	80	70	1.30	2.0
	8:20:00	786.384						
2-1	9:30:00	786.738	0.21	69	75	74	1.60	2.0
2	9:35:00	790.6	0.23	74	77	74	1.70	3.0
3	9:40:00	794.4	0.24	71	81	75	1.80	3.0
4	9:45:00	798.3	0.23	70	84	75	1.70	3.0
5	9:50:00	802.2	0.20	77	86	77	1.50	3.0
6	9:55:00	805.95	0.18	79	86	77	1.40	3.0
7	10:00:00	809.33	0.15	78	86	82	1.10	3.0
8	10:05:00	812.85	0.16	79	86	82	1.20	3.0
9	10:10:00	816.01	0.18	82	88	78	1.30	3.0
10	10:15:00	819.3	0.19	82	88	78	1.40	3.0
11	10:20:00	822.9	0.19	79	88	78	1.40	3.0
12	10:25:00	826.4	0.19	79	88	78	1.40	3.0
	10:30:00	829.928						

Run Times:		V_m, ft^3	Ave. ΔP	T_s, °F	T_m, °F		ΔH	Max. Vac.
Start	7:20	83.781	0.19	72.8	79.5	72.2	1.396	3
End	10:30		Ave. √ΔP	T_s, °R	Ave. T_m, °R			
			0.43	532.8	535.9			

Comments/Notes:

AM-EMT-15 Rev. 35.4
1/6/2016

© 2016 TRC Environmental Corp.

TRC

Isokinetic Test Support Data

Company:	Elkhart Brass	Project#:	253282
Plant:	Elkhart, IN	Test Method(s):	12
Unit ID:	Melt 1	Test Run #:	2
Location:	Stack	Test Date(s):	5/11/2016

Console Operator:	G. Rock	Unit Operating Mode:	Normal
Console ID:	E20	Duct Shape/Area:	Round / 4.24 ft^2
Meter Y:	1.003	Fuel Type:	
Orifice $\Delta H_{@i}$:	1.611	F_d Factor:	dscf/MMBtu
Pitot Tube ID:	790	F_c Factor:	scf/MMBtu
Cal. coefficient (C_p):	0.84	Fuel heat content:	Btu /
Probe Liner Material:	Glass	Process/fuel flow rate:	/ hr
Nozzle Material:	Inconel	Soot blown?	N/A
Nozzle Diameter (D_n):	0.298 in	Duration:	N/A min

Sample collection time		
Total # of points:	24	
Target Sample time/point:	5.0	min
Target run duration:	120.0	min
Barometric Pressure (P_{bar}):	29.20	in Hg
Stack Static Pressure (P_g):	-0.80	in H2O
Stack Pressure (P_s):	29.14	in Hg

Imp.#	Contents	Tare wt. (grams)	Final wt: (grams)
1	H20	743.1	755.1
2	H20	735.3	738.0
3	Empty	595.1	596.8
4	Silica Gel	799.7	811.6
		Net grams (M_{H20}):	28.3

Leak Checks

Pre-Test Train Leak Check:	0.004	CFM @ 6 "Hg
Pre-Test Pitot Leak Check:	Pass	(Pass or Fail)
Post-Test Train Leak Rate:	0.003	CFM @ 5 "Hg
Post-Test Pitot Leak Check:	Pass	(Pass or Fail)
Pump/Orifice Leak Check:	Pass	(Pass or Fail)
Filter/Thimble ID:		
Tare Weight:		grams

Fixed Gas Analysis:

CO_2:	0.0	%vol
O_2:	20.9	%vol
N_2:	79.1	%vol

Description of Filter and Front Half Rinses:

Description of Impinger liquid:

General Comments:

© 2016 TRC Environmental Corp.

AM-EMT-15 Rev. 35.4
1/6/2016

TRC

Isokinetic Test - Processed Traverse Data

Company:	Elkhart Brass	**Project #:**	253282	**Test Date:**	5/11/2016
Plant:	Elkhart, IN	**Method(s):**	12	**X-Factor:**	7.336
Unit:	Melt 1	**Run #:**	2	**Minutes/pt:**	5
Location:	Stack				

Port & Point ID	Clock Time	Meter Volume (V_m) ft^3	ΔP ("H_2O)	Stack (Ts) °F	Dry Gas Meter Inlet (T_{min}) °F	Dry Gas Meter Outlet (T_{mout}) °F	Orifice ΔH ("H_2O)	Sample Vacuum ("Hg)
1-1	11:30:00	830.218	0.22	74	85	83	1.70	2.0
2	11:35:00	834.15	0.23	75	89	84	1.80	2.0
3	11:40:00	838.095	0.25	76	92	88	1.90	2.0
4	11:45:00	842.14	0.23	76	94	85	1.80	2.0
5	11:50:00	846.13	0.20	76	95	86	1.60	2.0
6	11:55:00	849.83	0.18	81	95	86	1.40	2.0
7	12:00:00	853.31	0.16	78	94	87	1.30	2.0
8	12:05:00	856.7	0.17	82	95	88	1.40	2.0
9	12:10:00	860.26	0.19	78	95	87	1.50	2.0
10	12:15:00	863.97	0.20	79	95	88	1.60	2.0
11	12:20:00	867.6	0.20	78	96	88	1.60	2.0
12	12:25:00	871.38	0.19	80	96	88	1.50	2.0
	12:30:00	875						
2-1	12:40:00	875.263	0.18	82	90	89	1.40	2.0
2	12:45:00	877.9	0.19	79	94	89	1.50	2.0
3	12:50:00	882.5	0.19	83	96	90	1.50	2.0
4	12:55:00	886.1	0.20	80	98	91	1.55	2.0
5	13:00:00	889.75	0.19	83	98	91	1.50	2.0
6	13:05:00	893.43	0.17	80	99	91	1.30	2.0
7	13:10:00	896.97	0.15	85	99	91	1.10	2.0
8	13:15:00	900.1	0.16	80	100	92	1.30	2.0
9	13:20:00	903.61	0.18	83	99	92	1.40	2.0
10	13:25:00	907.097	0.18	80	99	92	1.40	2.0
11	13:30:00	910.6	0.18	80	99	92	1.40	2.0
12	13:35:00	914.1	0.17	80	99	93	1.30	2.0
	13:40:00	917.575						

Run Times:		V_m, ft^3	Ave. ΔP	T_s, °F	T_m, °F		ΔH	Max. Vac.
Start	11:30	87.094	0.19	79.5	95.5	88.8	1.49	2
End	13:40		Ave. √ΔP	T_s, °R	Ave. T_m, °R			
			0.44	539.5	552.1			
Comments/Notes:								

© 2016 TRC Environmental Corp.

AM-EMT-15 Rev. 35.4
1/6/2016

TRC

Isokinetic Test Support Data

Company:	Elkhart Brass	Project#:	253282
Plant:	Elkhart, IN	Test Method(s):	12
Unit ID:	Melt 1	Test Run #:	3
Location:	Stack	Test Date(s):	5/11/2016

Console Operator:	G. Rock	Unit Operating Mode:	Normal
Console ID:	E20	Duct Shape/Area:	Round / 4.24 ft^2
Meter Y:	1.003	Fuel Type:	
Orifice $\Delta H_{@i}$:	1.611	F_d Factor:	dscf/MMBtu
Pitot Tube ID:	790	F_c Factor:	scf/MMBtu
Cal. coefficient (C_p):	0.84	Fuel heat content:	Btu /
Probe Liner Material:	Glass	Process/fuel flow rate:	/ hr
Nozzle Material:	Inconel	Soot blown?	N/A
Nozzle Diameter (D_n):	0.298 in	Duration:	N/A min

Sample collection time		
Total # of points:	24	
Target Sample time/point:	5.0	min
Target run duration:	120.0	min
Barometric Pressure (P_{bar}):	29.20	in Hg
Stack Static Pressure (P_g):	-0.80	in H2O
Stack Pressure (P_s):	29.14	in Hg

Imp #	Contents	Tare wt. (grams)	Final wt: (grams)
1	H20	755.1	767.8
2	H20	738.0	742.3
3	Empty	596.8	599.4
4	Silica Gel	807.5	821.1
		Net grams (M_{H20}):	33.2

Leak Checks

Pre-Test Train Leak Check:	0.003	CFM @ 7 "Hg
Pre-Test Pitot Leak Check:	Pass	(Pass or Fail)
Post-Test Train Leak Rate:	0.003	CFM @ 7 "Hg
Post-Test Pitot Leak Check:	Pass	(Pass or Fail)
Pump/Orifice Leak Check:	Pass	(Pass or Fail)
Filter/Thimble ID:		
Tare Weight:		grams

Fixed Gas Analysis:

CO_2:	0.0	%vol
O_2:	20.9	%vol
N_2:	79.1	%vol

Description of Filter and Front Half Rinses:

Description of Impinger liquid:

General Comments:

© 2016 TRC Environmental Corp.

TRC

Isokinetic Test - Processed Traverse Data

Company:	Elkhart Brass	**Project #:**	253282	**Test Date:**	5/11/2016
Plant:	Elkhart, IN	**Method(s):**	12	**X-Factor:**	7.336
Unit:	Melt 1	**Run #:**	3	**Minutes/pt:**	5
Location:	Stack				

Port & Point ID	Clock Time	Meter Volume (V_m) ft^3	ΔP ("H_2O)	Stack (Ts) °F	Dry Gas Meter Inlet (T_{min}) °F	Dry Gas Meter Outlet (T_{mout}) °F	Orifice ΔH ("H_2O)	Sample Vacuum ("Hg)
1-1	14:40:00	917.836	0.18	81	90	87	1.40	3.0
2	14:45:00	921.36	0.20	80	92	91	1.50	3.0
3	14:50:00	925.06	0.20	79	94	90	1.50	3.0
4	14:55:00	928.7	0.19	83	96	90	1.50	3.0
5	15:00:00	932.38	0.19	80	98	90	1.50	4.0
6	15:05:00	936.04	0.17	78	98	91	1.30	3.0
7	15:10:00	939.45	0.14	77	98	91	1.20	3.0
8	15:15:00	942.78	0.17	77	98	91	1.30	3.0
9	15:20:00	946.21	0.17	78	99	91	1.30	3.0
10	15:25:00	949.57	0.18	77	99	92	1.50	3.0
11	15:30:00	953.2	0.17	84	99	92	1.30	3.0
12	15:35:00	956.63	0.17	82	99	92	1.30	3.0
	15:40:00	960.078						
2-1	15:55:00	960.316	0.19	82	92	91	1.50	3.0
2	16:00:00	964.01	0.23	82	96	92	1.80	4.0
3	16:05:00	967.94	0.23	82	96	92	1.80	4.0
4	16:10:00	971.87	0.22	82	99	92	1.80	4.0
5	16:15:00	975.8	0.20	84	100	96	1.50	4.0
6	16:20:00	979.5	0.18	84	100	92	1.40	4.0
7	16:25:00	983.07	0.15	87	100	92	1.20	3.5
8	16:30:00	986.49	0.16	86	100	93	1.20	3.5
9	16:35:00	989.87	0.18	86	100	93	1.40	3.5
10	16:40:00	993.18	0.19	89	100	93	1.50	3.5
11	16:45:00	996.8	0.18	85	100	93	1.40	3.5
12	16:50:00	1000.3	0.18	87	100	93	1.40	1.1
	16:55:00	1003.901						

Run Times:		V_m, ft^3	Ave. ΔP	T_s, °F	T_m, °F		ΔH	Max. Vac.
Start	14:40	85.827	0.18	82.2	97.6	91.7	1.4	4
End	16:55		Ave. √ΔP	T_s, °R	Ave. T_m, °R			
			0.43	542.2	554.6			
Comments/Notes:								

© 2016 TRC Environmental Corp.

AM-EMT-15 Rev. 35.4
1/6/2016

TRC

Isokinetic Test Support Data

Company:	Elkhart Brass	Project#:	253282
Plant:	Elkhart, IN	Test Method(s):	12
Unit ID:	Melt 2	Test Run #:	1
Location:	Stack	Test Date(s):	5/11/2016

Console Operator:	BMC	Unit Operating Mode:	Normal
Console ID:	E37	Duct Shape/Area:	Round / 4.24 ft^2
Meter Y:	0.993	Fuel Type:	
Orifice $\Delta H_{@i}$:	1.85	F_d Factor:	dscf/MMBtu
Pitot Tube ID:	793A	F_c Factor:	scf/MMBtu
Cal. coefficient (C_p):	0.84	Fuel heat content:	Btu /
Probe Liner Material:	Glass	Process/fuel flow rate:	/ hr
Nozzle Material:	Stainless	Soot blown?	N/A
Nozzle Diameter (D_n):	0.3 in	Duration:	N/A min

Sample collection time		
Total # of points:	24	
Target Sample time/point:	5.0	min
Target run duration:	120.0	min
Barometric Pressure (P_{bar}):	29.17	in Hg
Stack Static Pressure (P_g):	-0.18	in H2O
Stack Pressure (P_s):	29.16	in Hg

Imp #	Contents	Tare wt. (grams)	Final wt: (grams)
1	0.1N HNO3	747.0	789.9
2	0.1N HNO3	697.0	662.1
3	Empty	606.3	612.6
4	Silica Gel	735.6	756.5
		Net grams (M_{H2O}):	35.2

Leak Checks

Pre-Test Train Leak Check:	0.000	CFM @ 13	"Hg
Pre-Test Pitot Leak Check:	Pass	(Pass or Fail)	
Post-Test Train Leak Rate:	0.000	CFM @ 5	"Hg
Post-Test Pitot Leak Check:	Pass	(Pass or Fail)	
Pump/Orifice Leak Check:	Pass	(Pass or Fail)	
Filter/Thimble ID:			
Tare Weight:		grams	

Fixed Gas Analysis:

CO_2:	0.0	%vol
O_2:	20.9	%vol
N_2:	79.1	%vol

Description of Filter and Front Half Rinses:

Description of Impinger liquid:

General Comments:

© 2016 TRC Environmental Corp.

AM-EMT-15 Rev. 35.4
1/6/2016

TRC

Isokinetic Test - Processed Traverse Data

Company:	Elkhart Brass	Project #:	253282.00	Test Date:	5/11/2016
Plant:	Elkhart, IN	Method(s):	12	X-Factor:	8.648
Unit:	Melt 2	Run #:	1	Minutes/pt:	5
Location:	Stack				

Port & Point ID	Clock Time	Meter Volume (V_m) ft^3	ΔP ("H_2O)	Stack (Ts) °F	Dry Gas Meter Inlet (T_{min}) °F	Dry Gas Meter Outlet (T_{mout}) °F	Orifice ΔH ("H_2O)	Sample Vacuum ("Hg)
1-1	7:20:00	190.015	0.13	69	63	62	1.10	2.0
1-2	7:25:00	193.09	0.15	69	67	62	1.30	2.0
1-3	7:30:00	196.13	0.15	71	70	63	1.30	2.0
1-4	7:35:00	199.38	0.18	72	73	64	1.60	2.0
1-5	7:40:00	202.79	0.19	71	74	65	1.60	2.0
1-6	7:45:00	206.31	0.22	71	76	66	1.90	2.0
1-7	7:50:00	210.06	0.26	70	77	67	2.30	3.0
1-8	7:55:00	214.24	0.30	70	78	68	2.60	3.0
1-9	8:00:00	218.69	0.32	72	79	69	2.80	3.0
1-10	8:05:00	223.31	0.34	71	80	70	3.00	4.0
1-11	8:10:00	228.16	0.36	72	81	70	3.10	4.0
1-12	8:15:00	232.99	0.34	72	82	71	3.00	4.0
	8:20:00	237.641						
2-1	9:30:00	237.917	0.19	70	76	75	1.70	2.5
2-2	9:35:00	241.62	0.18	73	79	75	1.60	2.5
2-3	9:40:00	245.13	0.22	71	82	76	1.90	2.5
2-4	9:45:00	248.92	0.22	73	84	76	1.90	2.5
2-5	9:50:00	252.87	0.25	74	85	77	2.20	3.0
2-6	9:55:00	256.86	0.27	75	85	77	2.40	3.0
2-7	10:00:00	261.19	0.30	80	86	78	2.60	3.0
2-8	10:05:00	265.56	0.33	78	87	78	2.90	3.5
2-9	10:10:00	270.28	0.33	79	87	79	2.90	3.5
2-10	10:15:00	275.01	0.24	77	88	79	2.10	3.0
2-11	10:20:00	279.05	0.22	79	88	80	1.90	2.5
2-12	10:25:00	282.89	0.23	75	88	80	2.00	2.5
	10:30:00	286.823						

Run Times:		V_m, ft^3	Ave. ΔP	T_s, °F	T_m, °F		ΔH	Max. Vac.
Start	7:20	96.532	0.25	73.1	79.8	72.0	2.154	4
End	10:30		Ave. √ΔP	T_s, °R	Ave. T_m, °R			
			0.49	533.1	535.9			
Comments/Notes:								

© 2016 TRC Environmental Corp.

AM-EMT-15 Rev. 35.4
1/6/2016

TRC

Isokinetic Test Support Data

Company:	Elkhart Brass	Project#:	253282
Plant:	Elkhart, IN	Test Method(s):	12
Unit ID:	Melt 2	Test Run #:	2
Location:	Stack	Test Date(s):	5/11/2016

Console Operator:	BMC	Unit Operating Mode:	Normal
Console ID:	E37	Duct Shape/Area:	Round / 4.24 ft^2
Meter Y:	0.993	Fuel Type:	
Orifice $\Delta H_{@i}$:	1.85	F_d Factor:	dscf/MMBtu
Pitot Tube ID:	793A	F_c Factor:	scf/MMBtu
Cal. coefficient (C_p):	0.84	Fuel heat content:	Btu /
Probe Liner Material:	Glass	Process/fuel flow rate:	/ hr
Nozzle Material:	Stainless	Soot blown?	N/A
Nozzle Diameter (D_n):	0.3 in	Duration:	N/A min

Sample collection time

Total # of points:	24	
Target Sample time/point:	5.0	min
Target run duration:	120.0	min
Barometric Pressure (P_{bar}):	29.20	in Hg
Stack Static Pressure (P_g):	-0.18	in H2O
Stack Pressure (P_s):	29.19	in Hg

Imp #	Contents	Tare wt. (grams)	Final wt: (grams)
1	0.1N HNO3	747.2	753.2
2	0.1N HNO3	747.0	759.0
3	Empty	626.3	629.5
4	Silica Gel	687.7	705.0
		Net grams (M_{H2O}):	38.5

Leak Checks

Pre-Test Train Leak Check:	0.000	CFM @ 13 "Hg
Pre-Test Pitot Leak Check:	Pass	(Pass or Fail)
Post-Test Train Leak Rate:	0.000	CFM @ 5 "Hg
Post-Test Pitot Leak Check:	Pass	(Pass or Fail)
Pump/Orifice Leak Check:	Pass	(Pass or Fail)
Filter/Thimble ID:		
Tare Weight:		grams

Fixed Gas Analysis:

CO_2:	0.0	%vol
O_2:	20.9	%vol
N_2:	79.1	%vol

Description of Filter and Front Half Rinses:

Description of Impinger liquid:

General Comments:

© 2016 TRC Environmental Corp.

AM-EMT-15 Rev. 35.4
1/6/2016

TRC

Isokinetic Test - Processed Traverse Data

Company:	Elkhart Brass	Project #:	253282.00	Test Date:	5/11/2016
Plant:	Elkhart, IN	Method(s):	12	X-Factor:	8.648
Unit:	Melt 2	Run #:	2	Minutes/pt:	5
Location:	Stack				

Port & Point ID	Clock Time	Meter Volume (V_m) ft^3	ΔP ("H_2O)	Stack (Ts) °F	Dry Gas Meter Inlet (T_{min}) °F	Dry Gas Meter Outlet (T_{mout}) °F	Orifice ΔH ("H_2O)	Sample Vacuum ("Hg)
1-1	11:30:00	287.513	0.19	76	85	84	1.70	2.0
1-2	11:35:00	291.23	0.23	77	87	85	2.00	2.0
1-3	11:40:00	295.18	0.24	77	91	87	2.10	2.5
1-4	11:45:00	299.31	0.25	78	92	85	2.20	2.5
1-5	11:50:00	303.51	0.24	80	93	86	2.10	2.5
1-6	11:55:00	307.53	0.26	80	93	86	2.30	3.0
1-7	12:00:00	311.86	0.28	81	94	86	2.50	3.0
1-8	12:05:00	316.36	0.32	81	95	87	2.80	3.0
1-9	12:10:00	321.03	0.34	80	95	88	3.00	3.5
1-10	12:15:00	325.88	0.33	80	95	88	2.90	3.0
1-11	12:20:00	330.71	0.24	81	96	88	2.10	2.5
1-12	12:25:00	334.76	0.21	81	95	88	1.90	2.5
	12:30:00	338.652						
2-1	12:40:00	339.114	0.10	78	91	89	0.88	1.5
2-2	12:45:00	341.83	0.13	79	92	89	1.20	2.0
2-3	12:50:00	344.82	0.15	81	94	90	1.30	2.0
2-4	12:55:00	348.34	0.17	81	95	90	1.50	2.0
2-5	13:00:00	351.83	0.20	83	96	90	1.80	2.5
2-6	13:05:00	355.69	0.21	83	97	91	1.90	2.5
2-7	13:10:00	359.58	0.27	85	98	91	2.40	3.0
2-8	13:15:00	363.95	0.30	83	99	92	2.70	3.0
2-9	13:20:00	368.61	0.33	84	100	92	2.90	3.5
2-10	13:25:00	373.38	0.34	83	100	93	3.00	3.5
2-11	13:30:00	378.27	0.35	86	100	93	3.10	3.5
2-12	13:35:00	383.22	0.33	83	101	94	2.90	3.5
	13:40:00	388.002						

Run Times:		V_m, ft^3	Ave. ΔP	T_s, °F	T_m, °F		ΔH	Max. Vac.
Start	11:30	100.027	0.25	80.9	94.8	88.8	2.22	3.5
End	13:40		Ave. √ΔP	T_s, °R	Ave. T_m, °R			
			0.49	540.9	551.8			

Comments/Notes:

© 2016 TRC Environmental Corp.

AM-EMT-15 Rev. 35.4
1/6/2016

TRC

Isokinetic Test Support Data

Company:	Elkhart Brass	Project#:	253282
Plant:	Elkhart, IN	Test Method(s):	12
Unit ID:	Melt 2	Test Run #:	3
Location:	Stack	Test Date(s):	5/11/2016

Console Operator:	BMC	Unit Operating Mode:	Normal
Console ID:	E37	Duct Shape/Area:	Round / 4.24 ft^2
Meter Y:	0.993	Fuel Type:	
Orifice $\Delta H_{@i}$:	1.85	F_d Factor:	dscf/MMBtu
Pitot Tube ID:	793A	F_c Factor:	scf/MMBtu
Cal. coefficient (C_p):	0.84	Fuel heat content:	Btu /
Probe Liner Material:	Glass	Process/fuel flow rate:	/ hr
Nozzle Material:	Stainless	Soot blown?	N/A
Nozzle Diameter (D_n):	0.3 in	Duration:	N/A min

Sample collection time		
Total # of points:	24	
Target Sample time/point:	5.0	min
Target run duration:	120.0	min
Barometric Pressure (P_{bar}):	29.20	in Hg
Stack Static Pressure (P_g):	-0.18	in H2O
Stack Pressure (P_s):	29.19	in Hg

Imp #	Contents	Tare wt. (grams)	Final wt: (grams)
1	0.1N HNO3	747.2	748.2
2	0.1N HNO3	700.9	714.3
3	Empty	608.1	611.6
4	Silica Gel	715.8	735.9
		Net grams (M_{H20}):	38.0

Leak Checks

Pre-Test Train Leak Check:	0.000	CFM @ 13	"Hg
Pre-Test Pitot Leak Check:	Pass	(Pass or Fail)	
Post-Test Train Leak Rate:	0.000	CFM @ 7	"Hg
Post-Test Pitot Leak Check:	Pass	(Pass or Fail)	
Pump/Orifice Leak Check:	Pass	(Pass or Fail)	
Filter/Thimble ID:			
Tare Weight:		grams	

Fixed Gas Analysis:

CO_2:	0.0	%vol
O_2:	20.9	%vol
N_2:	79.1	%vol

Description of Filter and Front Half Rinses:

Description of Impinger liquid:

General Comments:

© 2016 TRC Environmental Corp.

TRC

Isokinetic Test - Processed Traverse Data

Company:	Elkhart Brass	Project #:	253282.00	Test Date:	5/11/2016
Plant:	Elkhart, IN	Method(s):	12	X-Factor:	8.648
Unit:	Melt 2	Run #:	3	Minutes/pt:	5
Location:	Stack				

Port & Point ID	Clock Time	Meter Volume (V_m) ft^3	ΔP ("H_2O)	Stack (Ts) °F	Dry Gas Meter Inlet (T_{min}) °F	Dry Gas Meter Outlet (T_{mout}) °F	Orifice ΔH ("H_2O)	Sample Vacuum ("Hg)
1-1	14:40:00	388.517	0.11	80	90	90	0.97	2.0
1-2	14:45:00	391.39	0.15	81	90	90	1.30	3.0
1-3	14:50:00	394.72	0.17	83	93	90	1.50	3.0
1-4	14:55:00	398.26	0.17	83	95	90	1.50	3.0
1-5	15:00:00	401.81	0.19	82	96	90	1.70	3.0
1-6	15:05:00	405.57	0.19	82	97	91	1.70	3.0
1-7	15:10:00	409.46	0.25	82	98	91	2.20	4.0
1-8	15:15:00	413.53	0.32	83	98	91	2.80	5.0
1-9	15:20:00	418.23	0.32	82	99	92	2.80	5.0
1-10	15:25:00	422.91	0.33	86	99	92	2.90	5.0
1-11	15:30:00	427.83	0.34	83	99	92	3.00	5.0
1-12	15:35:00	432.62	0.31	83	100	94	2.80	5.0
	15:40:00	437.332						
2-1	15:55:00	437.712	0.21	83	93	92	1.90	3.5
2-2	16:00:00	441.69	0.24	84	95	92	2.10	4.0
2-3	16:05:00	445.78	0.22	84	96	92	1.90	3.5
2-4	16:10:00	449.77	0.24	85	97	92	2.10	4.0
2-5	16:15:00	453.71	0.25	85	98	92	2.20	4.0
2-6	16:20:00	457.88	0.30	83	98	92	2.70	5.0
2-7	16:25:00	461.51	0.33	82	99	92	2.90	5.0
2-8	16:30:00	467.27	0.34	81	99	92	3.00	5.0
2-9	16:35:00	472.18	0.36	81	100	92	3.20	5.5
2-10	16:40:00	477.21	0.34	85	100	93	3.00	5.0
2-11	16:45:00	482.19	0.25	85	100	93	2.20	4.0
2-12	16:50:00	486.56	0.24	85	100	93	2.10	4.0
	16:55:00	490.728						

Run Times:		V_m, ft^3	Ave. ΔP	T_s, °F	T_m, °F		ΔH	Max. Vac.
Start	14:40	101.831	0.26	83.0	97.0	91.7	2.3	5.5
End	16:55		Ave. √ΔP	T_s, °R	Ave. T_m, °R			
			0.50	543.0	554.4			

Comments/Notes:

© 2016 TRC Environmental Corp.

AM-EMT-15 Rev. 35.4
1/6/2016

TRC

Isokinetic Test Support Data

Company:	Elkhart Brass	Project#:	253282
Plant:	Elkhart, IN	Test Method(s):	12
Unit ID:	Tap Hood	Test Run #:	1
Location:	Stack	Test Date(s):	5/11/2016

Console Operator:	Gavin Lewis	Unit Operating Mode:	Normal
Console ID:	E57	Duct Shape/Area:	Round / 4.91 ft^2
Meter Y:	0.993	Fuel Type:	
Orifice $\Delta H_{@i}$:	1.832	F_d Factor:	dscf/MMBtu
Pitot Tube ID:	872	F_c Factor:	scf/MMBtu
Cal. coefficient (C_p):	0.84	Fuel heat content:	Btu /
Probe Liner Material:	Glass	Process/fuel flow rate:	/ hr
Nozzle Material:	Stainless steel	Soot blown?	N/A
Nozzle Diameter (D_n):	0.272 in	Duration:	N/A min

Sample collection time

Total # of points:	24	
Target Sample time/point:	5.0	min
Target run duration:	120.0	min
Barometric Pressure (P_{bar}):	29.17	in Hg
Stack Static Pressure (P_g):	-0.15	in H2O
Stack Pressure (P_s):	29.16	in Hg

Imp #	Contents	Tare wt. (grams)	Final wt: (grams)
1	0.1N HNO3	706.9	687.7
2	0.1N HNO3	656.0	676.2
3	Empty	630.6	637.7
4	Silica Gel	679.3	701.7

Net grams (M_{H20}): 30.5

Leak Checks

Pre-Test Train Leak Check:	0.000	CFM @ 10 "Hg
Pre-Test Pitot Leak Check:	Pass	(Pass or Fail)
Post-Test Train Leak Rate:	0.000	CFM @ 5 "Hg
Post-Test Pitot Leak Check:	Pass	(Pass or Fail)
Pump/Orifice Leak Check:	Pass	(Pass or Fail)
Filter/Thimble ID:		
Tare Weight:		grams

Fixed Gas Analysis:

CO_2:	0.0	%vol
O_2:	20.9	%vol
N_2:	79.1	%vol

Description of Filter and Front Half Rinses:

Description of Impinger liquid:

General Comments:

© 2016 TRC Environmental Corp.

AM-EMT-15 Rev. 35.4
1/6/2016

TRC

Isokinetic Test - Processed Traverse Data

Company:	Elkhart Brass	**Project #:**	253282	**Test Date:**	5/11/2016
Plant:	Elkhart, IN	**Method(s):**	12	**X-Factor:**	5.788
Unit:	Tap Hood	**Run #:**	1	**Minutes/pt:**	5
Location:	Stack				

Port & Point ID	Clock Time	Meter Volume (V_m) ft^3	ΔP ("H_2O)	Stack (Ts) °F	Dry Gas Meter Inlet (T_{min}) °F	Dry Gas Meter Outlet (T_{mout}) °F	Orifice ΔH ("H_2O)	Sample Vacuum ("Hg)
B-1	7:20:00	733.782	0.25	74	62	61	1.40	2.0
B-2	7:25:00	737.23	0.26	76	67	62	1.50	2.0
B-3	7:30:00	740.56	0.28	77	71	64	1.60	2.0
B-4	7:35:00	744.08	0.28	77	73	64	1.60	2.0
B-5	7:40:00	747.67	0.26	77	74	65	1.50	2.0
B-6	7:45:00	751.09	0.24	78	76	67	1.40	2.0
B-7	7:50:00	754.41	0.23	79	77	68	1.30	2.0
B-8	7:55:00	757.8	0.27	78	77	69	1.60	2.0
B-9	8:00:00	761.25	0.30	78	78	70	1.75	2.0
B-10	8:05:00	764.86	0.31	78	79	71	1.80	2.0
B-11	8:10:00	768.65	0.32	78	80	72	1.90	2.0
B-12	8:15:00	772.5	0.31	78	80	72	1.80	2.0
	8:20:00	776.405						
A-1	9:30:00	776.61	0.35	73	73	73	2.05	2.0
A-2	9:35:00	780.58	0.36	75	75	73	2.10	2.0
A-3	9:40:00	784.6	0.36	77	76	73	2.10	2.0
A-4	9:45:00	788.65	0.34	79	78	74	2.00	2.0
A-5	9:50:00	792.55	0.32	79	79	74	1.85	2.0
A-6	9:55:00	796.47	0.26	79	79	75	1.50	2.0
A-7	10:00:00	799.89	0.25	76	80	75	1.50	2.0
A-8	10:05:00	803.38	0.24	77	80	75	1.40	2.0
A-9	10:10:00	806.78	0.25	77	81	75	1.50	2.0
A-10	10:15:00	810.37	0.27	77	81	76	1.60	2.0
A-11	10:20:00	814	0.28	77	82	76	1.60	2.0
A-12	10:25:00	817.7	0.28	79	83	76	1.60	2.0
	10:30:00	821.237						

Run Times:		V_m, ft^3	Ave. ΔP	T_s, °F	T_m, °F		ΔH	Max. Vac.
Start	7:20	87.250	0.29	77.2	76.7	70.8	1.665	2
End	10:30		Ave. √ΔP	T_s, °R	Ave. T_m, °R			
			0.53	537.2	533.8			

Comments/Notes:

© 2016 TRC Environmental Corp.

AM-EMT-15 Rev. 35.4
1/6/2016

TRC

Isokinetic Test Support Data

Company:	Elkhart Brass	Project#:	253282
Plant:	Elkhart, IN	Test Method(s):	12
Unit ID:	Tap Hood	Test Run #:	2
Location:	Stack	Test Date(s):	5/11/2016

Console Operator:	Gavin Lewis	Unit Operating Mode:	Normal
Console ID:	E57	Duct Shape/Area:	Round / 4.91 ft^2
Meter Y:	0.993	Fuel Type:	
Orifice $\Delta H_{@i}$:	1.832	F_d Factor:	dscf/MMBtu
Pitot Tube ID:	872	F_c Factor:	scf/MMBtu
Cal. coefficient (C_p):	0.84	Fuel heat content:	Btu /
Probe Liner Material:	Glass	Process/fuel flow rate:	/ hr
Nozzle Material:	Stainless steel	Soot blown?	N/A
Nozzle Diameter (D_n):	0.272 in	Duration:	N/A min

Sample collection time		
Total # of points:	24	
Target Sample time/point:	5.0	min
Target run duration:	120.0	min
Barometric Pressure (P_{bar}):	29.17	in Hg
Stack Static Pressure (P_g):	-0.15	in H2O
Stack Pressure (P_s):	29.16	in Hg

Imp #	Contents	Tare wt. (grams)	Final wt: (grams)
1	0.1N HNO3	677.2	677.6
2	0.1N HNO3	684.9	699.2
3	Empty	633.0	635.8
4	Silica Gel	756.9	773.9
		Net grams (M_{H2O}):	34.5

Leak Checks

Pre-Test Train Leak Check:	0.000	CFM @ 8	"Hg
Pre-Test Pitot Leak Check:	Pass	(Pass or Fail)	
Post-Test Train Leak Rate:	0.000	CFM @ 8	"Hg
Post-Test Pitot Leak Check:	Pass	(Pass or Fail)	
Pump/Orifice Leak Check:	Pass	(Pass or Fail)	
Filter/Thimble ID:	NA		
Tare Weight:	NA	grams	

Fixed Gas Analysis:

CO_2:	0.0	%vol
O_2:	20.9	%vol
N_2:	79.1	%vol

Description of Filter and Front Half Rinses:

Description of Impinger liquid:

General Comments:

© 2016 TRC Environmental Corp.

AM-EMT-15 Rev. 35.4
1/6/2016

TRC

Isokinetic Test - Processed Traverse Data

Company:	Elkhart Brass	**Project #:**	253282	**Test Date:**	5/11/2016
Plant:	Elkhart, IN	**Method(s):**	12	**X-Factor:**	5.788
Unit:	Tap Hood	**Run #:**	2	**Minutes/pt:**	5
Location:	Stack				

Port & Point ID	Clock Time	Meter Volume (V_m) ft^3	ΔP ("H_2O)	Stack (Ts) °F	Dry Gas Meter Inlet (T_{min}) °F	Dry Gas Meter Outlet (T_{mout}) °F	Orifice ΔH ("H_2O)	Sample Vacuum ("Hg)
B-1	11:30:00	821.612	0.34	77	80	79	2.00	3.0
B-2	11:35:00	825.6	0.35	77	84	79	2.00	3.0
B-3	11:40:00	829.55	0.36	78	86	80	2.10	3.0
B-4	11:45:00	833.62	0.35	81	87	81	2.00	3.0
B-5	11:50:00	837.65	0.32	79	88	81	1.90	3.0
B-6	11:55:00	841.65	0.27	79	89	82	1.60	3.0
B-7	12:00:00	845.28	0.25	80	89	83	1.50	3.0
B-8	12:05:00	848.79	0.25	80	89	83	1.50	3.0
B-9	12:10:00	852.3	0.25	80	89	83	1.50	3.0
B-10	12:15:00	856	0.28	80	90	84	1.60	3.0
B-11	12:20:00	859.78	0.28	80	90	84	1.60	3.0
B-12	12:25:00	863.25	0.28	81	91	85	1.65	3.0
	12:30:00	866.67						
A-1	12:40:00	866.867	0.25	81	87	86	1.50	3.0
A-2	12:45:00	870.34	0.27	82	88	86	1.60	3.0
A-3	12:50:00	873.9	0.29	82	89	86	1.70	3.0
A-4	12:55:00	877.6	0.28	83	89	86	1.65	3.0
A-5	13:00:00	881.5	0.26	81	89	86	1.50	3.0
A-6	13:05:00	885.2	0.23	83	89	86	1.40	3.0
A-7	13:10:00	888.49	0.25	82	90	86	1.50	3.0
A-8	13:15:00	891.85	0.29	84	90	87	1.70	3.0
A-9	13:20:00	895.5	0.32	83	90	86	1.90	3.0
A-10	13:25:00	899.5	0.32	84	90	86	1.90	3.0
A-11	13:30:00	903.5	0.34	84	91	87	2.00	3.0
A-12	13:35:00	908.13	0.32	85	90	87	1.90	3.0
	13:40:00	911.432						

Run Times:		V_m, ft^3	Ave. ΔP	T_s, °F	T_m, °F		ΔH	Max. Vac.
Start	11:30	89.623	0.29	81.1	88.5	84.1	1.72	3
End	13:40		Ave. √ΔP	T_s, °R	Ave. T_m, °R			
			0.54	541.1	546.3			

Comments/Notes:

© 2016 TRC Environmental Corp.

AM-EMT-15 Rev. 35.4
1/6/2016

TRC

Isokinetic Test Support Data

Company:	Elkhart Brass	Project#:	253282
Plant:	Elkhart, IN	Test Method(s):	12
Unit ID:	Tap Hood	Test Run #:	3
Location:	Stack	Test Date(s):	5/11/2016

Console Operator:	Gavin Lewis	Unit Operating Mode:	Normal
Console ID:	E57	Duct Shape/Area:	Round / 4.91 ft^2
Meter Y:	0.993	Fuel Type:	
Orifice $\Delta H_{@i}$:	1.832	F_d Factor:	dscf/MMBtu
Pitot Tube ID:	872	F_c Factor:	scf/MMBtu
Cal. coefficient (C_p):	0.84	Fuel heat content:	Btu /
Probe Liner Material:	Glass	Process/fuel flow rate:	/ hr
Nozzle Material:	Stainless steel	Soot blown?	N/A
Nozzle Diameter (D_n):	0.272 in	Duration:	N/A min

Sample collection time		
Total # of points:	24	
Target Sample time/point:	5.0	min
Target run duration:	120.0	min
Barometric Pressure (P_{bar}):	29.20	in Hg
Stack Static Pressure (P_g):	-0.15	in H2O
Stack Pressure (P_s):	29.19	in Hg

Imp #	Contents	Tare wt. (grams)	Final wt: (grams)
1	0.1N HNO3	707.9	712.9
2	0.1N HNO3	652.5	663.5
3	Empty	633.0	632.0
4	Silica Gel	690.3	709.3

Net grams (M_{H2O}): 34.0

Leak Checks

Pre-Test Train Leak Check:	0.000	CFM @ 8 "Hg
Pre-Test Pitot Leak Check:	Pass	(Pass or Fail)
Post-Test Train Leak Rate:	0.000	CFM @ 8 "Hg
Post-Test Pitot Leak Check:	Pass	(Pass or Fail)
Pump/Orifice Leak Check:	Pass	(Pass or Fail)
Filter/Thimble ID:	NA	
Tare Weight:	NA	grams

Fixed Gas Analysis:

CO_2:	0.0	%vol
O_2:	20.9	%vol
N_2:	79.1	%vol

Description of Filter and Front Half Rinses:

Description of Impinger liquid:

General Comments:

© 2016 TRC Environmental Corp.

AM-EMT-15 Rev. 35.4
1/6/2016

TRC

Isokinetic Test - Processed Traverse Data

Company:	Elkhart Brass	**Project #:**	253282	**Test Date:**	5/11/2016
Plant:	Elkhart, IN	**Method(s):**	12	**X-Factor:**	5.788
Unit:	Tap Hood	**Run #:**	3	**Minutes/pt:**	5
Location:	Stack				

Port & Point ID	Clock Time	Meter Volume (V_m) ft^3	ΔP ("H_2O)	Stack (Ts) °F	Dry Gas Meter Inlet (T_{min}) °F	Dry Gas Meter Outlet (T_{mout}) °F	Orifice ΔH ("H_2O)	Sample Vacuum ("Hg)
B-1	14:40:00	911.71	0.27	84	79	80	1.60	2.0
B-2	14:45:00	915.6	0.28	84	80	80	1.60	2.0
B-3	14:50:00	919.2	0.28	84	81	79	1.60	2.0
B-4	14:55:00	922.48	0.28	84	82	79	1.60	2.0
B-5	15:00:00	926.1	0.26	85	82	80	1.50	2.0
B-6	15:05:00	929.6	0.22	85	83	80	1.30	2.0
B-7	15:10:00	932.9	0.23	85	84	80	1.30	2.0
B-8	15:15:00	936.16	0.28	85	85	80	1.60	2.0
B-9	15:20:00	939.73	0.31	84	85	81	1.80	2.0
B-10	15:25:00	943.48	0.32	84	86	81	1.90	2.0
B-11	15:30:00	947.45	0.32	84	86	81	1.90	2.0
B-12	15:35:00	951.27	0.31	84	87	81	1.80	2.0
	15:40:00	955.115						
A-1	15:55:00	955.279	0.33	84	83	82	1.90	2.0
A-2	16:00:00	959.25	0.34	84	84	82	2.00	2.0
A-3	16:05:00	963.5	0.33	84	85	82	1.90	2.0
A-4	16:10:00	967.2	0.32	84	85	81	1.90	2.0
A-5	16:15:00	970.9	0.30	85	86	82	1.70	2.0
A-6	16:20:00	974.67	0.27	86	85	81	1.60	2.0
A-7	16:25:00	978.34	0.26	86	85	81	1.50	2.0
A-8	16:30:00	981.75	0.25	87	85	81	1.40	2.0
A-9	16:35:00	985.25	0.26	87	86	81	1.50	2.0
A-10	16:40:00	988.65	0.28	86	86	82	1.60	2.0
A-11	16:45:00	992.3	0.27	86	87	82	1.60	2.0
A-12	16:50:00	996	0.27	86	87	82	1.60	2.0
	16:55:00	999.566						

Run Times:		V_m, ft^3	Ave. ΔP	T_s, °F	T_m, °F		ΔH	Max. Vac.
Start	14:40	87.692	0.29	84.9	84.3	80.9	1.7	2
End	16:55		Ave. √ΔP	T_s, °R	Ave. T_m, °R			
			0.53	544.9	542.6			
Comments/Notes:								

© 2016 TRC Environmental Corp.

AM-EMT-15 Rev. 35.4
1/6/2016

METHOD 9 REDUCED FIELD DATA
PROJECT NUMBER: 253282

Test Date: 5/11/2016
Facility: Elkhart Brass
Location: Melt 1 Stack
Process: 1

Start Time: 7:20
End Time: 8:20

Test Results:

Maximum 6 Minute Average:	0.0	%
Average Opacity:	0.0	%
Maximum Opacity:	0.0	%
Minimum Opacity:	0.0	%
# of Readings >20%:	0	
Number of Readings:	240	

Interval	0	15	30	45
1	0	0	0	0
2	0	0	0	0
3	0	0	0	0
4	0	0	0	0
5	0	0	0	0
6	0	0	0	0
7	0	0	0	0
8	0	0	0	0
9	0	0	0	0
10	0	0	0	0
11	0	0	0	0
12	0	0	0	0
13	0	0	0	0
14	0	0	0	0
15	0	0	0	0
16	0	0	0	0
17	0	0	0	0
18	0	0	0	0
19	0	0	0	0
20	0	0	0	0
21	0	0	0	0
22	0	0	0	0
23	0	0	0	0
24	0	0	0	0
25	0	0	0	0
26	0	0	0	0
27	0	0	0	0
28	0	0	0	0
29	0	0	0	0
30	0	0	0	0

Interval	0	15	30	45
31	0	0	0	0
32	0	0	0	0
33	0	0	0	0
34	0	0	0	0
35	0	0	0	0
36	0	0	0	0
37	0	0	0	0
38	0	0	0	0
39	0	0	0	0
40	0	0	0	0
41	0	0	0	0
42	0	0	0	0
43	0	0	0	0
44	0	0	0	0
45	0	0	0	0
46	0	0	0	0
47	0	0	0	0
48	0	0	0	0
49	0	0	0	0
50	0	0	0	0
51	0	0	0	0
52	0	0	0	0
53	0	0	0	0
54	0	0	0	0
55	0	0	0	0
56	0	0	0	0
57	0	0	0	0
58	0	0	0	0
59	0	0	0	0
60	0	0	0	0

© 2013 TRC Environmental Corp.

AM-EMT-24 Rev 3_05/31/13

METHOD 9 REDUCED FIELD DATA
PROJECT NUMBER: 253282

Test Date: 5/11/2016
Facility: Elkhart Brass
Location: Melt 1 Stack
Process: 2

Start Time: 11:30
End Time: 12:30

Test Results:

Maximum 6 Minute Average:	0.0 %
Average Opacity:	0.0 %
Maximum Opacity:	0.0 %
Minimum Opacity:	0.0 %
# of Readings >20%:	0
Number of Readings:	240

Interval	0	15	30	45
1	0	0	0	0
2	0	0	0	0
3	0	0	0	0
4	0	0	0	0
5	0	0	0	0
6	0	0	0	0
7	0	0	0	0
8	0	0	0	0
9	0	0	0	0
10	0	0	0	0
11	0	0	0	0
12	0	0	0	0
13	0	0	0	0
14	0	0	0	0
15	0	0	0	0
16	0	0	0	0
17	0	0	0	0
18	0	0	0	0
19	0	0	0	0
20	0	0	0	0
21	0	0	0	0
22	0	0	0	0
23	0	0	0	0
24	0	0	0	0
25	0	0	0	0
26	0	0	0	0
27	0	0	0	0
28	0	0	0	0
29	0	0	0	0
30	0	0	0	0

Interval	0	15	30	45
31	0	0	0	0
32	0	0	0	0
33	0	0	0	0
34	0	0	0	0
35	0	0	0	0
36	0	0	0	0
37	0	0	0	0
38	0	0	0	0
39	0	0	0	0
40	0	0	0	0
41	0	0	0	0
42	0	0	0	0
43	0	0	0	0
44	0	0	0	0
45	0	0	0	0
46	0	0	0	0
47	0	0	0	0
48	0	0	0	0
49	0	0	0	0
50	0	0	0	0
51	0	0	0	0
52	0	0	0	0
53	0	0	0	0
54	0	0	0	0
55	0	0	0	0
56	0	0	0	0
57	0	0	0	0
58	0	0	0	0
59	0	0	0	0
60	0	0	0	0

© 2013 TRC Environmental Corp.

METHOD 9 REDUCED FIELD DATA
PROJECT NUMBER: 253282

Test Date: 5/11/2016
Facility: Elkhart Brass
Location: Melt 1 Stack
Process: 3

Start Time: 14:40
End Time: 15:40

Test Results:

Maximum 6 Minute Average:	0.0	%
Average Opacity:	0.0	%
Maximum Opacity:	0.0	%
Minimum Opacity:	0.0	%
# of Readings >20%:	0	
Number of Readings:	240	

Interval	0	15	30	45
1	0	0	0	0
2	0	0	0	0
3	0	0	0	0
4	0	0	0	0
5	0	0	0	0
6	0	0	0	0
7	0	0	0	0
8	0	0	0	0
9	0	0	0	0
10	0	0	0	0
11	0	0	0	0
12	0	0	0	0
13	0	0	0	0
14	0	0	0	0
15	0	0	0	0
16	0	0	0	0
17	0	0	0	0
18	0	0	0	0
19	0	0	0	0
20	0	0	0	0
21	0	0	0	0
22	0	0	0	0
23	0	0	0	0
24	0	0	0	0
25	0	0	0	0
26	0	0	0	0
27	0	0	0	0
28	0	0	0	0
29	0	0	0	0
30	0	0	0	0

Interval	0	15	30	45
31	0	0	0	0
32	0	0	0	0
33	0	0	0	0
34	0	0	0	0
35	0	0	0	0
36	0	0	0	0
37	0	0	0	0
38	0	0	0	0
39	0	0	0	0
40	0	0	0	0
41	0	0	0	0
42	0	0	0	0
43	0	0	0	0
44	0	0	0	0
45	0	0	0	0
46	0	0	0	0
47	0	0	0	0
48	0	0	0	0
49	0	0	0	0
50	0	0	0	0
51	0	0	0	0
52	0	0	0	0
53	0	0	0	0
54	0	0	0	0
55	0	0	0	0
56	0	0	0	0
57	0	0	0	0
58	0	0	0	0
59	0	0	0	0
60	0	0	0	0

© 2013 TRC Environmental Corp.

AM-EMT-24 Rev 3_05/31/13

METHOD 9 REDUCED FIELD DATA
PROJECT NUMBER: 253282

Test Date: 5/11/2016
Facility: Elkhart Brass
Location: Melt 2 Stack
Process: 1

Start Time: 7:20
End Time: 8:20

Test Results:

Maximum 6 Minute Average:	0.0	%
Average Opacity:	0.0	%
Maximum Opacity:	0.0	%
Minimum Opacity:	0.0	%
# of Readings >20%:	0	
Number of Readings:	240	

Interval	0	15	30	45
1	0	0	0	0
2	0	0	0	0
3	0	0	0	0
4	0	0	0	0
5	0	0	0	0
6	0	0	0	0
7	0	0	0	0
8	0	0	0	0
9	0	0	0	0
10	0	0	0	0
11	0	0	0	0
12	0	0	0	0
13	0	0	0	0
14	0	0	0	0
15	0	0	0	0
16	0	0	0	0
17	0	0	0	0
18	0	0	0	0
19	0	0	0	0
20	0	0	0	0
21	0	0	0	0
22	0	0	0	0
23	0	0	0	0
24	0	0	0	0
25	0	0	0	0
26	0	0	0	0
27	0	0	0	0
28	0	0	0	0
29	0	0	0	0
30	0	0	0	0

Interval	0	15	30	45
31	0	0	0	0
32	0	0	0	0
33	0	0	0	0
34	0	0	0	0
35	0	0	0	0
36	0	0	0	0
37	0	0	0	0
38	0	0	0	0
39	0	0	0	0
40	0	0	0	0
41	0	0	0	0
42	0	0	0	0
43	0	0	0	0
44	0	0	0	0
45	0	0	0	0
46	0	0	0	0
47	0	0	0	0
48	0	0	0	0
49	0	0	0	0
50	0	0	0	0
51	0	0	0	0
52	0	0	0	0
53	0	0	0	0
54	0	0	0	0
55	0	0	0	0
56	0	0	0	0
57	0	0	0	0
58	0	0	0	0
59	0	0	0	0
60	0	0	0	0

© 2013 TRC Environmental Corp.

AM-EMT-24 Rev 3_05/31/13

METHOD 9 REDUCED FIELD DATA
PROJECT NUMBER: 253282

Test Date: 5/11/2016
Facility: Elkhart Brass
Location: Melt 2 Stack
Process: 2

Start Time: 11:30
End Time: 12:30

Test Results:

Maximum 6 Minute Average:	0.0 %
Average Opacity:	0.0 %
Maximum Opacity:	0.0 %
Minimum Opacity:	0.0 %
# of Readings >20%:	0
Number of Readings:	240

Interval	0	15	30	45
1	0	0	0	0
2	0	0	0	0
3	0	0	0	0
4	0	0	0	0
5	0	0	0	0
6	0	0	0	0
7	0	0	0	0
8	0	0	0	0
9	0	0	0	0
10	0	0	0	0
11	0	0	0	0
12	0	0	0	0
13	0	0	0	0
14	0	0	0	0
15	0	0	0	0
16	0	0	0	0
17	0	0	0	0
18	0	0	0	0
19	0	0	0	0
20	0	0	0	0
21	0	0	0	0
22	0	0	0	0
23	0	0	0	0
24	0	0	0	0
25	0	0	0	0
26	0	0	0	0
27	0	0	0	0
28	0	0	0	0
29	0	0	0	0
30	0	0	0	0

Interval	0	15	30	45
31	0	0	0	0
32	0	0	0	0
33	0	0	0	0
34	0	0	0	0
35	0	0	0	0
36	0	0	0	0
37	0	0	0	0
38	0	0	0	0
39	0	0	0	0
40	0	0	0	0
41	0	0	0	0
42	0	0	0	0
43	0	0	0	0
44	0	0	0	0
45	0	0	0	0
46	0	0	0	0
47	0	0	0	0
48	0	0	0	0
49	0	0	0	0
50	0	0	0	0
51	0	0	0	0
52	0	0	0	0
53	0	0	0	0
54	0	0	0	0
55	0	0	0	0
56	0	0	0	0
57	0	0	0	0
58	0	0	0	0
59	0	0	0	0
60	0	0	0	0

© 2013 TRC Environmental Corp.

AM-EMT-24 Rev 3_05/31/13

METHOD 9 REDUCED FIELD DATA
PROJECT NUMBER: 253282

Test Date: 5/11/2016
Facility: Elkhart Brass
Location: Melt 2 Stack
Process: 3

Start Time: 14:40
End Time: 15:40

Test Results:

Maximum 6 Minute Average:	0.0	%
Average Opacity:	0.0	%
Maximum Opacity:	0.0	%
Minimum Opacity:	0.0	%
# of Readings >20%:	0	
Number of Readings:	240	

Interval	0	15	30	45
1	0	0	0	0
2	0	0	0	0
3	0	0	0	0
4	0	0	0	0
5	0	0	0	0
6	0	0	0	0
7	0	0	0	0
8	0	0	0	0
9	0	0	0	0
10	0	0	0	0
11	0	0	0	0
12	0	0	0	0
13	0	0	0	0
14	0	0	0	0
15	0	0	0	0
16	0	0	0	0
17	0	0	0	0
18	0	0	0	0
19	0	0	0	0
20	0	0	0	0
21	0	0	0	0
22	0	0	0	0
23	0	0	0	0
24	0	0	0	0
25	0	0	0	0
26	0	0	0	0
27	0	0	0	0
28	0	0	0	0
29	0	0	0	0
30	0	0	0	0

Interval	0	15	30	45
31	0	0	0	0
32	0	0	0	0
33	0	0	0	0
34	0	0	0	0
35	0	0	0	0
36	0	0	0	0
37	0	0	0	0
38	0	0	0	0
39	0	0	0	0
40	0	0	0	0
41	0	0	0	0
42	0	0	0	0
43	0	0	0	0
44	0	0	0	0
45	0	0	0	0
46	0	0	0	0
47	0	0	0	0
48	0	0	0	0
49	0	0	0	0
50	0	0	0	0
51	0	0	0	0
52	0	0	0	0
53	0	0	0	0
54	0	0	0	0
55	0	0	0	0
56	0	0	0	0
57	0	0	0	0
58	0	0	0	0
59	0	0	0	0
60	0	0	0	0

© 2013 TRC Environmental Corp.

AM-EMT-24 Rev 3_05/31/13

METHOD 9 REDUCED FIELD DATA
PROJECT NUMBER: 253282

Test Date: 5/11/2016
Facility: Elkhart Brass
Location: Tap Hood
Process: 1

Start Time: 9:30
End Time: 10:30

Test Results:

Maximum 6 Minute Average:	0.0	%
Average Opacity:	0.0	%
Maximum Opacity:	0.0	%
Minimum Opacity:	0.0	%
# of Readings >20%:	0	
Number of Readings:	240	

Interval	0	15	30	45
1	0	0	0	0
2	0	0	0	0
3	0	0	0	0
4	0	0	0	0
5	0	0	0	0
6	0	0	0	0
7	0	0	0	0
8	0	0	0	0
9	0	0	0	0
10	0	0	0	0
11	0	0	0	0
12	0	0	0	0
13	0	0	0	0
14	0	0	0	0
15	0	0	0	0
16	0	0	0	0
17	0	0	0	0
18	0	0	0	0
19	0	0	0	0
20	0	0	0	0
21	0	0	0	0
22	0	0	0	0
23	0	0	0	0
24	0	0	0	0
25	0	0	0	0
26	0	0	0	0
27	0	0	0	0
28	0	0	0	0
29	0	0	0	0
30	0	0	0	0

Interval	0	15	30	45
31	0	0	0	0
32	0	0	0	0
33	0	0	0	0
34	0	0	0	0
35	0	0	0	0
36	0	0	0	0
37	0	0	0	0
38	0	0	0	0
39	0	0	0	0
40	0	0	0	0
41	0	0	0	0
42	0	0	0	0
43	0	0	0	0
44	0	0	0	0
45	0	0	0	0
46	0	0	0	0
47	0	0	0	0
48	0	0	0	0
49	0	0	0	0
50	0	0	0	0
51	0	0	0	0
52	0	0	0	0
53	0	0	0	0
54	0	0	0	0
55	0	0	0	0
56	0	0	0	0
57	0	0	0	0
58	0	0	0	0
59	0	0	0	0
60	0	0	0	0

© 2013 TRC Environmental Corp.

METHOD 9 REDUCED FIELD DATA
PROJECT NUMBER: 253282

Test Date: 5/11/2016
Facility: Elkhart Brass
Location: Tap Hood
Process: 2

Start Time: 12:40
End Time: 13:40

Test Results:

Maximum 6 Minute Average:	0.0	%
Average Opacity:	0.0	%
Maximum Opacity:	0.0	%
Minimum Opacity:	0.0	%
# of Readings >20%:	0	
Number of Readings:	240	

Interval	0	15	30	45
1	0	0	0	0
2	0	0	0	0
3	0	0	0	0
4	0	0	0	0
5	0	0	0	0
6	0	0	0	0
7	0	0	0	0
8	0	0	0	0
9	0	0	0	0
10	0	0	0	0
11	0	0	0	0
12	0	0	0	0
13	0	0	0	0
14	0	0	0	0
15	0	0	0	0
16	0	0	0	0
17	0	0	0	0
18	0	0	0	0
19	0	0	0	0
20	0	0	0	0
21	0	0	0	0
22	0	0	0	0
23	0	0	0	0
24	0	0	0	0
25	0	0	0	0
26	0	0	0	0
27	0	0	0	0
28	0	0	0	0
29	0	0	0	0
30	0	0	0	0

Interval	0	15	30	45
31	0	0	0	0
32	0	0	0	0
33	0	0	0	0
34	0	0	0	0
35	0	0	0	0
36	0	0	0	0
37	0	0	0	0
38	0	0	0	0
39	0	0	0	0
40	0	0	0	0
41	0	0	0	0
42	0	0	0	0
43	0	0	0	0
44	0	0	0	0
45	0	0	0	0
46	0	0	0	0
47	0	0	0	0
48	0	0	0	0
49	0	0	0	0
50	0	0	0	0
51	0	0	0	0
52	0	0	0	0
53	0	0	0	0
54	0	0	0	0
55	0	0	0	0
56	0	0	0	0
57	0	0	0	0
58	0	0	0	0
59	0	0	0	0
60	0	0	0	0

© 2013 TRC Environmental Corp.

METHOD 9 REDUCED FIELD DATA
PROJECT NUMBER: 253282

Test Date: 5/11/2016
Facility: Elkhart Brass
Location: Tap Hood
Process: 3

Start Time: 15:55
End Time: 16:55

Test Results:

Maximum 6 Minute Average:	0.0	%
Average Opacity:	0.0	%
Maximum Opacity:	0.0	%
Minimum Opacity:	0.0	%
# of Readings >20%:	0	
Number of Readings:	240	

Interval	0	15	30	45
1	0	0	0	0
2	0	0	0	0
3	0	0	0	0
4	0	0	0	0
5	0	0	0	0
6	0	0	0	0
7	0	0	0	0
8	0	0	0	0
9	0	0	0	0
10	0	0	0	0
11	0	0	0	0
12	0	0	0	0
13	0	0	0	0
14	0	0	0	0
15	0	0	0	0
16	0	0	0	0
17	0	0	0	0
18	0	0	0	0
19	0	0	0	0
20	0	0	0	0
21	0	0	0	0
22	0	0	0	0
23	0	0	0	0
24	0	0	0	0
25	0	0	0	0
26	0	0	0	0
27	0	0	0	0
28	0	0	0	0
29	0	0	0	0
30	0	0	0	0

Interval	0	15	30	45
31	0	0	0	0
32	0	0	0	0
33	0	0	0	0
34	0	0	0	0
35	0	0	0	0
36	0	0	0	0
37	0	0	0	0
38	0	0	0	0
39	0	0	0	0
40	0	0	0	0
41	0	0	0	0
42	0	0	0	0
43	0	0	0	0
44	0	0	0	0
45	0	0	0	0
46	0	0	0	0
47	0	0	0	0
48	0	0	0	0
49	0	0	0	0
50	0	0	0	0
51	0	0	0	0
52	0	0	0	0
53	0	0	0	0
54	0	0	0	0
55	0	0	0	0
56	0	0	0	0
57	0	0	0	0
58	0	0	0	0
59	0	0	0	0
60	0	0	0	0

© 2013 TRC Environmental Corp.

AeroMet
Engineering, Inc.
Solutions for a Changing Environment

Certification of Visible Opacity Reading

Ricardo Nunez

qualified to conduct EPA Method 9 Tests for visible opacity in accordance with the methods established for such qualification in 40 CFR Part 60 Appendix A.

Certification Date: March 22, 2016

Expiration Date: September 22, 2016

Wayne Redden

AeroMet Instructor: Wayne Redden

Equipment Configuration for Meter Box Calibration

USEPA Promulgated Method 5

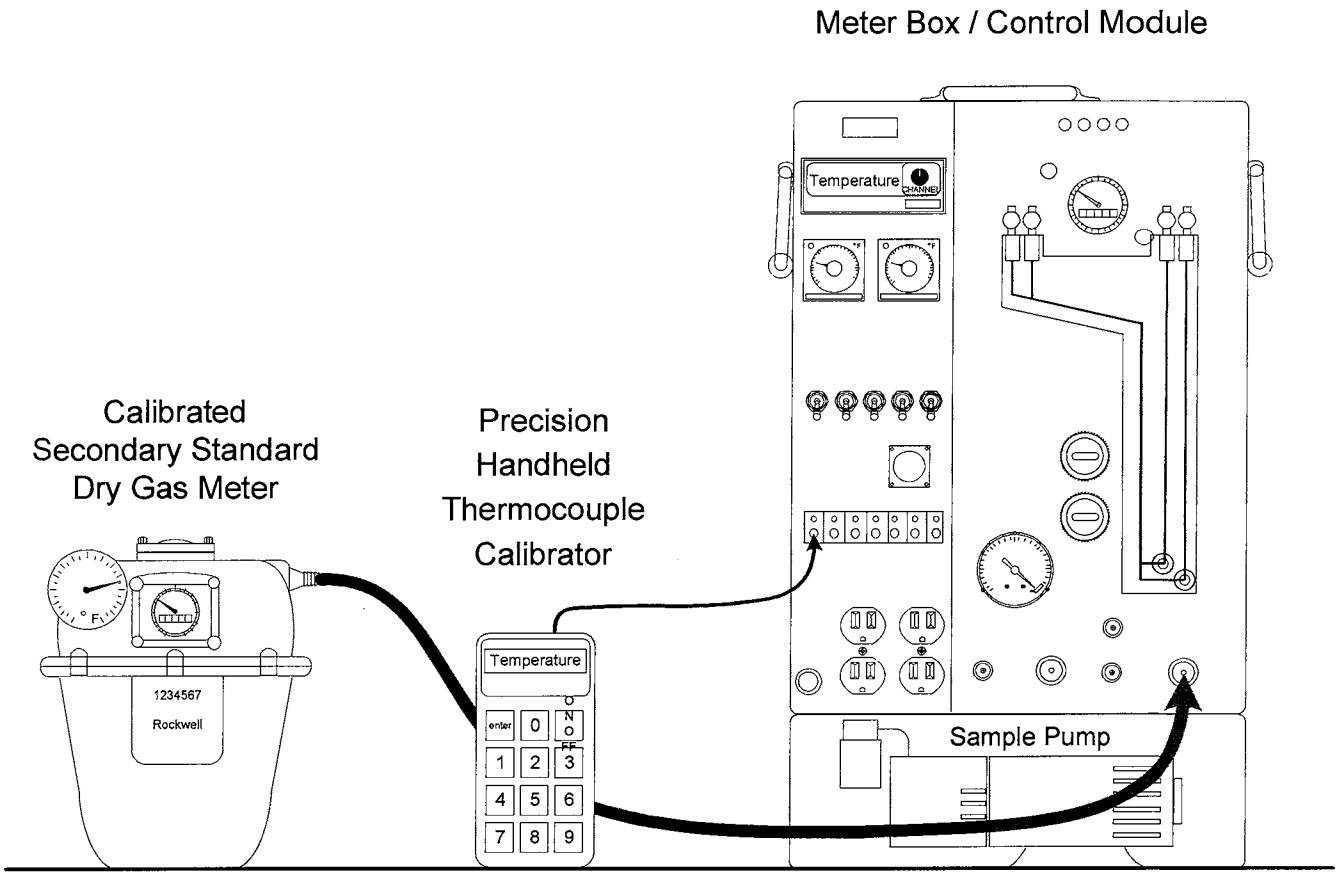

©2013 TRC Environmental Corp. TRC-DWG-PTM-005-3 Rev. 02/06/2013

TRC

Pre Test DGM Calibration
(before use, as left data)

Control Module I.D. No.	E19	System Leak Check:	Stable @9.5" w.c. @> 5 min.	Date:	9-26-2014
Standard Meter I.D. No.:	3623853	Standard Meter Calibration Date:	9-12-2014	Calibrated By:	L. Campo
Standard Meter (Y_{ds}):	0.997	Standard Meter Calibration Due Date:	9-12-2015	Barometric Pressure :	29.44

Run Number	Orifice Setting in.H_2O	Meter Pressure in.H_2O	Standard Meter Volume Vr	Control Module DGM Volume Vd	Standard Meter Temp. F Tr	Dry Gas Meter Inlet Temp. F Tdi	Dry Gas Meter Outlet Temp. F Tdo	Dry Gas Meter Avg. Temp. F Td	Time Min.	Time Sec.	Gamma Correction Coef. Y	Pressure equal to: 0.75 cfm @ STP (DH@)	Flow Rate (Q) scfm
Initial			744.112	489.034	71	75	74						
Final			749.752	494.749	71	73	73						
Difference 1	0.35	0.35	5.640	5.715	71	74	74	74	16	14	0.988	1.659	0.34
Initial			738.754	477.743	71	75	75						
Final			744.029	483.063	71	74	74						
Difference 2	0.85	0.85	5.275	5.320	71	75	75	75	10	10	0.993	1.804	0.51
Initial			750.034	495.032	71	74	75						
Final			756.537	501.588	71	77	77						
Difference 3	2.00	2.00	6.503	6.556	71	76	76	76	8	17	0.993	1.849	0.77
								Pre Test Calibration Factor (Y_{avg})			0.991	1.771	

Specifications: CFR 40, Part 60, Appendix A, Method 5, section 10.3.1. Calibration Before Use.

©2014 TRC Environmental Corp.

AM-CAL-04 Rev. 11
5/20/14

TRC

Pre Test Temperature Indicator Calibration

(For K-Type Thermocouples)

Date: 9-26-2014

Name: L. Campo

Control Module Number: E19

Ambient Temperature: 71 °F

Reference std. thermocouple calibrator: Omega Engineering, Inc. Model No. CL23A *
Reference std. thermocouple calibrator serial number: T-236796
Date of reference std. calibration verification: 3/19/2014
Due date of reference std. calibration verification: 3/19/2015

Reference Thermometer (°F)	Thermometer Under Test (°F)	Temperature Difference (%)
0	-1	0.2
600	600	0.0
1200	1201	0.1

$$\text{Temperature Difference, \%} = \frac{\text{Ref. std. temp. (°F + 460)} - \text{Therm. under test temp. (°F + 460)}}{\text{Reference std temp. (°F + 460)}} \times 100 \leq 1.5\,\%$$

** Reference std. is directly traceable to NIST (National Institute of Standards and Technology)*

©2014 TRC Environmental Corp.

Post Meter Calibration Verification

Project Number: 253282
Last Test Run: 5/11/2016
Operator(s): Cameron Dillion

	Run 1	Run 2	Run 3	Average
Console/Meter ID:	E19	E19	E19	N/A
Run Time (min):	120	120	120	
V_m (cf):	83.336	86.333	85.246	
T_m (°R):	531.21	546.40	544.54	
P_{bar} ("Hg):	29.17	29.20	29.20	
DH_{avg} ("H_2O):	1.48	1.54	1.50	
Md:	28.84	28.84	28.84	
Orifice DH@I:	1.85	1.85	1.85	
Meter Yi:	0.991	0.991	0.991	0.991
Yqa:	0.981	0.980	0.980	0.980

Calibration Status: Pass

Specifications: USEPA Emissions Measurement Center Approved Alternative Method (ALT-009)
Alternative Method 5 Post-Test Calibration (SOP GFM-11)

Post Test Leak Checks

Train Leak Check:	Pass	Pass	Pass
Pump/Orifice Leak Check:	Pass	Pass	Pass

© 2016 TRC Environmental Corp.

TRC

Pre Test DGM Calibration

(before use, as left data)

Control Module I.D. No.	E20	System Leak Check:	Stable @ 9" w.c. @ > 5 min.	Date:	12-15-2014
Standard Meter I.D. No.:	3623853	Standard Meter Calibration Date:	09-12-2014	Calibrated By:	L. Campo
Standard Meter (Y_{de}):	0.997	Standard Meter Calibration Due Date:	09-12-2015	Barometric Pressure :	28.97

Run Number	Orifice Setting in.H_2O	Meter Pressure in.H_2O	Standard Meter Volume Vr	Control Module DGM Volume Vd	Standard Meter Temp. F Tr	Dry Gas Meter Inlet Temp. F Tdi	Dry Gas Meter Outlet Temp. F Tdo	Dry Gas Meter Avg. Temp. F Td	Time Min.	Time Sec.	Gamma Correction Coef. Y	Pressure equal to: 0.75 cfm @ STP (DH@)	Flow Rate (Q) scfm
Initial			204.827	740.902	71	74	72						
Final			211.363	747.422	71	75	72						
Difference 1	0.35	0.35	6.536	6.520	71	75	72	73	18	15	1.003	1.588	0.34
Initial			183.157	719.310	71	76	73						
Final			191.181	727.327	71	79	74						
Difference 2	0.85	0.85	8.024	8.017	71	78	74	76	14	30	1.004	1.608	0.53
Initial			211.815	747.866	71	74	72						
Final			218.769	754.783	71	75	73						
Difference 3	2.00	2.00	6.954	6.917	71	75	73	74	8	15	1.002	1.637	0.81
										Pre Test Calibration Factor (Y_{avg})	1.003	1.611	

Specifications: CFR 40, Part 60, Appendix A, Method 5, section 10.3.1. Calibration Before Use.

©2014 TRC Environmental Corp.

TRC

Pre Test Temperature Indicator Calibration
(For K-Type Thermocouples)

Date: 12-15-2014

Name: L. Campo

Control Module Number: E20

Ambient Temperature: 71 °F

Reference std. thermocouple calibrator: Omega Engineering, Inc. Model No. CL23A *
Reference std. thermocouple calibrator serial number: T-236796
Date of reference std. calibration verification: 3/19/2014
Due date of reference std. calibration verification: 3/19/2015

Reference Thermometer (°F)	Thermometer Under Test (°F)	Temperature Difference (%)
0	0	0.0
600	601	0.1
1200	1202	0.1

$$\text{Temperature Difference, \%} = \frac{\text{Ref. std. temp. (°F + 460)} - \text{Therm. under test temp. (°F + 460)}}{\text{Reference std temp. (°F + 460)}} \times 100 \leq 1.5\,\%$$

** Reference std. is directly traceable to NIST (National Institute of Standards and Technology)*

©2014 TRC Environmental Corp.

TRC

Post Meter Calibration Verification

Project Number: 253282
Last Test Run: 5/11/2016
Operator(s): G. Rock

	Run 1	Run 2	Run 3	Average
Console/Meter ID:	E20	E20	E20	N/A
Run Time (min):	120	120	120	
V_m (cf):	83.781	87.094	85.827	
T_m (°R):	535.88	552.13	554.65	
P_{bar} ("Hg):	29.17	29.20	29.20	
DH_{avg} ("H_2O):	1.40	1.49	1.44	
Md:	28.84	28.84	28.84	
Orifice DH@I:	1.611	1.611	1.611	
Meter Yi:	1.003	1.003	1.003	1.003
Yqa:	1.022	1.030	1.029	1.027

Calibration Status: Pass

Specifications: USEPA Emissions Measurement Center Approved Alternative Method (ALT-009)
Alternative Method 5 Post-Test Calibration (SOP GFM-11)

Post Test Leak Checks			
Train Leak Check:	Pass	Pass	Pass
Pump/Orifice Leak Check:	Pass	Pass	Pass

© 2016 TRC Environmental Corp.

TRC

Pre Test DGM Calibration
(before use, as left data)

Control Module I.D. No.	E21	System Leak Check:	Stable @ 9" w.c. @ > 5 min.	Date:	01-07-2015
Standard Meter I.D. No.:	3623853	Standard Meter Calibration Date:	9-12-2014	Calibrated By:	L. Campo
Standard Meter (Y_{de}):	0.997	Standard Meter Calibration Due Date:	9-12-2015	Barometric Pressure :	29.85

Run Number	Orifice Setting in.H_2O	Meter Pressure in.H_2O	Standard Meter Volume Vr	Control Module DGM Volume Vd	Standard Meter Temp. F Tr	Dry Gas Meter Inlet Temp. F Tdi	Dry Gas Meter Outlet Temp. F Tdo	Dry Gas Meter Avg. Temp. F Td	Time Min.	Time Sec.	Gamma Correction Coef. Y	Pressure equal to: 0.75 cfm @ STP (DH@)	Flow Rate (Q) scfm
Initial			518.911	989.602	74	78	76						
Final			524.973	995.706	74	77	75						
Difference 1	0.35	0.35	6.062	6.104	74	78	76	77	18	13	0.994	1.794	0.33
Initial			511.537	982.167	74	78	75						
Final			518.768	989.442	74	79	75						
Difference 2	0.85	0.85	7.231	7.275	74	79	75	77	14	17	0.994	1.882	0.50
Initial			525.207	995.941	74	78	76						
Final			531.543	1002.340	74	80	77						
Difference 3	2.00	2.00	6.336	6.399	74	79	77	78	8	21	0.989	1.967	0.75
								Pre Test Calibration Factor (Y_{avg})			0.992	1.881	

Specifications: CFR 40, Part 60, Appendix A, Method 5, section 10.3.1. Calibration Before Use.

©2014 TRC Environmental Corp.

AM-CAL-04 Rev. 11
5/20/14

TRC

Pre Test Temperature Indicator Calibration
(For K-Type Thermocouples)

Date: 01-07-2015

Name: L. Campo

Control Module Number: E21

Ambient Temperature: 74 °F

Reference std. thermocouple calibrator: Omega Engineering, Inc. Model No. CL23A *
Reference std. thermocouple calibrator serial number: T-236796
Date of reference std. calibration verification: 3/19/2014
Due date of reference std. calibration verification: 3/19/2015

Reference Thermometer (°F)	Thermometer Under Test (°F)	Temperature Difference (%)
0	1	0.2
600	600	0.0
1200	1200	0.0

$$\text{Temperature Difference, \%} = \frac{\text{Ref. std. temp. (°F + 460)} - \text{Therm. under test temp. (°F + 460)}}{\text{Reference std temp. (°F + 460)}} \times 100 \leq 1.5\ \%$$

** Reference std. is directly traceable to NIST (National Institute of Standards and Technology)*

©2014 TRC Environmental Corp.

Post Meter Calibration Verification

Project Number: 253282
Last Test Run: 5/11/2016
Operator(s): G. Rock

	Run 1	Run 2	Run 3	Average
Console/Meter ID:	E21	E21	E21	N/A
Run Time (min):	120	120	120	
V_m (cf):	79.94	83.483	82.273	
T_m (°R):	529.81	545.83	549.63	
P_{bar} ("Hg):	29.17	29.20	29.20	
DH_{avg} ("H_2O):	1.54	1.60	1.55	
Md:	28.84	28.84	28.84	
Orifice DH@I:	1.862	1.862	1.862	
Meter Yi:	0.992	0.992	0.992	0.992
Yqa:	1.041	1.030	1.031	1.034

Calibration Status: Pass

Specifications: USEPA Emissions Measurement Center Approved Alternative Method (ALT-009)
Alternative Method 5 Post-Test Calibration (SOP GFM-11)

Post Test Leak Checks

Train Leak Check:	Pass	Pass	Pass
Pump/Orifice Leak Check:	Pass	Pass	Pass

© 2016 TRC Environmental Corp.

TRC

Pre Test DGM Calibration
(before use, as left data)

Control Module I.D. No.	E37	System Leak Check:	Stable @ 9.5" w.c. @ > 5 min.	Date:	03-30-2015
Standard Meter I.D. No.:	3623853	Standard Meter Calibration Date:	09-12-2014	Calibrated By:	L. Campo
Standard Meter (Y_{ds}):	0.997	Standard Meter Calibration Due Date:	09-12-2015	Barometric Pressure :	29.26

Run Number	Orifice Setting in.$H_2$0	Meter Pressure in.$H_2$0	Standard Meter Volume Vr	Control Module DGM Volume Vd	Standard Meter Temp. F Tr	Dry Gas Meter Inlet Temp. F Tdi	Dry Gas Meter Outlet Temp. F Tdo	Dry Gas Meter Avg. Temp. F Td	Time Min.	Time Sec.	Gamma Correction Coef. Y	Pressure equal to: 0.75 cfm @ STP (DH@)	Flow Rate (Q) scfm
Initial			945.224	554.502	71	74	74						
Final			951.410	560.728	72	74	74						
Difference 1	0.35	0.35	6.186	6.226	72	74	74	74	18	7	0.994	1.730	0.33
Initial			937.719	546.953	71	73	73						
Final			944.937	554.211	71	74	74						
Difference 2	0.85	0.85	7.218	7.258	71	74	74	74	14	13	0.994	1.899	0.49
Initial			951.718	561.030	72	74	74						
Final			958.061	567.404	72	74	74						
Difference 3	2.00	2.00	6.343	6.374	72	74	74	74	8	11	0.991	1.922	0.76
								Pre Test Calibration Factor (Y_{avg})			0.993	1.850	

Specifications: CFR 40, Part 60, Appendix A, Method 5, section 10.3.1. Calibration Before Use.

©2014 TRC Environmental Corp.

TRC

Pre Test Temperature Indicator Calibration
(For K-Type Thermocouples)

Date: 03-30-2015

Name: L. Campo

Control Module Number: E37

Ambient Temperature: 72 °F

Reference std. thermocouple calibrator: Omega Engineering, Inc. Model No. CL23A *
Reference std. thermocouple calibrator serial number: T-256103
Date of reference std. calibration verification: 12/18/2014
Due date of reference std. calibration verification: 12/18/2015

Reference Thermometer (°F)	Thermometer Under Test (°F)	Temperature Difference (%)
0	1	0.2
600	601	0.1
1200	1202	0.1

$$\text{Temperature Difference, \%} = \frac{\text{Ref. std. temp. (°F + 460)} - \text{Therm. under test temp. (°F + 460)}}{\text{Reference std temp. (°F + 460)}} \times 100 \leq 1.5\,\%$$

** Reference std. is directly traceable to NIST (National Institute of Standards and Technology)*

©2014 TRC Environmental Corp.

AM-CAL-04 Rev. 11
5/20/14

TRC

Post Meter Calibration Verification

Project Number: 253282
Last Test Run: 5/11/2016
Operator(s): BMC

	Run 1	Run 2	Run 3	Average
Console/Meter ID:	E37	E37	E37	N/A
Run Time (min):	120	120	120	
V_m (cf):	96.532	100.027	101.831	
T_m (°R):	535.88	551.79	554.35	
P_{bar} ("Hg):	29.17	29.20	29.20	
DH_{avg} ("H_2O):	2.15	2.22	2.27	
Md:	28.84	28.84	28.84	
Orifice DH@I:	1.85	1.85	1.85	
Meter Yi:	0.993	0.993	0.993	0.993
Yqa:	1.027	1.019	1.016	1.021

Calibration Status: Pass

Specifications: USEPA Emissions Measurement Center Approved Alternative Method (ALT-009)
Alternative Method 5 Post-Test Calibration (SOP GFM-11)

Post Test Leak Checks			
Train Leak Check:	Pass	Pass	Pass
Pump/Orifice Leak Check:	Pass	Pass	Pass

© 2016 TRC Environmental Corp.

TRC

Pre Test DGM Calibration

(before use, as left data)

Control Module I.D. No.	E53	System Leak Check:	Stable @ 9" w.c. @ > 5 min.	Date:	04-15-2015
Standard Meter I.D. No.:	3623853	Standard Meter Calibration Date:	09-12-2014	Calibrated By:	L. Campo
Standard Meter (Y_{de}):	0.997	Standard Meter Calibration Due Date:	09-12-2015	Barometric Pressure :	29.44

Run Number	Orifice Setting in.$H_2$0	Meter Pressure in.$H_2$0	Standard Meter Volume Vr	Control Module DGM Volume Vd	Standard Meter Temp. F Tr	Dry Gas Meter Inlet Temp. F Tdi	Dry Gas Meter Outlet Temp. F Tdo	Dry Gas Meter Avg. Temp. F Td	Time Min.	Time Sec.	Gamma Correction Coef. Y	Pressure equal to: 0.75 cfm @ STP (DH@)	Flow Rate (Q) scfm
Initial			48.920	545.848	72	74	74						
Final			55.416	552.450	72	74	74						
Difference 1	0.35	0.35	6.496	6.602	72	74	74	74	18	19	0.984	1.597	0.35
Initial			41.077	537.966	72	74	74						
Final			48.614	545.518	72	74	74						
Difference 2	0.85	0.85	7.537	7.552	72	74	74	74	14	15	0.997	1.744	0.52
Initial			56.058	553.087	72	74	74						
Final			64.417	561.403	72	74	74						
Difference 3	2.00	2.00	8.359	8.316	72	74	74	74	10	20	1.001	1.754	0.79
								Pre Test Calibration Factor (Y_{avg})			0.994	1.698	

Specifications: CFR 40, Part 60, Appendix A, Method 5, section 10.3.1. Calibration Before Use.

©2014 TRC Environmental Corp.

TRC

Pre Test Temperature Indicator Calibration
(For K-Type Thermocouples)

Date: 04-15-2015

Name: L. Campo

Control Module Number: E53

Ambient Temperature: 72 °F

Reference std. thermocouple calibrator: Omega Engineering, Inc. Model No. CL23A *
Reference std. thermocouple calibrator serial number: T-236796
Date of reference std. calibration verification: 4/7/2015
Due date of reference std. calibration verification: 4/7/2016

Reference Thermometer (°F)	Thermometer Under Test (°F)	Temperature Difference (%)
0	0	0.0
600	600	0.0
1200	1201	0.1

$$\text{Temperature Difference, \%} = \frac{\text{Ref. std. temp. (°F + 460)} - \text{Therm. under test temp. (°F + 460)}}{\text{Reference std temp. (°F + 460)}} \times 100 \leq 1.5\ \%$$

** Reference std. is directly traceable to NIST (National Institute of Standards and Technology)*

©2014 TRC Environmental Corp.

Post Meter Calibration Verification

Project Number: 253282
Last Test Run: 5/11/2016
Operator(s): BMC

	Run 1	Run 2	Run 3	Average
Console/Meter ID:	E53	E53	E53	N/A
Run Time (min):	120	120	120	
V_m (cf):	97.715	105.46	104.542	
T_m (°R):	534.29	550.25	553.54	
P_{bar} ("Hg):	29.17	29.20	29.20	
DH_{avg} ("H_2O):	1.73	1.95	1.92	
Md:	28.84	28.84	28.84	
Orifice DH@I:	1.613	1.613	1.613	
Meter Yi:	0.994	0.994	0.994	0.994
Yqa:	0.972	0.971	0.974	0.972

Calibration Status: Pass

Specifications: USEPA Emissions Measurement Center Approved Alternative Method (ALT-009)
Alternative Method 5 Post-Test Calibration (SOP GFM-11)

Post Test Leak Checks			
Train Leak Check:	Pass	Pass	Pass
Pump/Orifice Leak Check:	Pass	Pass	Pass

© 2016 TRC Environmental Corp.

TRC

Pre Test DGM Calibration

(before use, as left data)

Control Module I.D. No.	E57	System Leak Check:	Stable @ 9" w.c. @ > 5 min.	Date:	04-07-2016
Standard Meter I.D. No.:	3623853	Standard Meter Calibration Date:	09-30-2015	Calibrated By:	L. Campo
Standard Meter (Y_{de}):	0.9935	Standard Meter Calibration Due Date:	09-30-2016	Barometric Pressure :	28.94

Run Number	Orifice Setting in.$H_2$0	Meter Pressure in.$H_2$0	Standard Meter Volume Vr	Control Module DGM Volume Vd	Standard Meter Temp. F Tr	Dry Gas Meter Inlet Temp. F Tdi	Dry Gas Meter Outlet Temp. F Tdo	Dry Gas Meter Avg. Temp. F Td	Time Min.	Time Sec.	Gamma Correction Coef. Y	Pressure equal to: 0.75 cfm @ STP (DH@)	Flow Rate (Q) scfm
Initial			814.394	718.913	71	73	72						
Final			820.735	725.282	71	75	73						
Difference 1	0.35	0.37	6.341	6.369	71	74	73	73	18	6	0.992	1.756	0.34
Initial			788.207	692.649	73	79	76						
Final			795.551	700.025	73	80	77						
Difference 2	0.85	0.85	7.344	7.376	73	80	77	78	14	13	0.996	1.853	0.49
Initial			821.284	725.841	71	75	73						
Final			827.670	732.254	71	76	73						
Difference 3	2.00	2.00	6.386	6.413	71	76	73	74	8	8	0.990	1.886	0.76
								Pre Test Calibration Factor (Y_{avg})			0.993	1.832	

Specifications: CFR 40, Part 60, Appendix A, Method 5, section 10.3.1. Calibration Before Use.

©2014 TRC Environmental Corp.

TRC

Pre Test Temperature Indicator Calibration
(For K-Type Thermocouples)

Date: 04-07-2016

Name: L. Campo

Control Module Number: E57

Ambient Temperature: 71 °F

Reference std. thermocouple calibrator: Omega Engineering, Inc. Model No. CL23A *
Reference std. thermocouple calibrator serial number: T-256103
Date of reference std. calibration verification: 2/19/2016
Due date of reference std. calibration verification: 2/19/2017

Reference Thermometer (°F)	Thermometer Under Test (°F)	Temperature Difference (%)
0	2	0.4
600	602	0.2
1200	1201	0.1

$$\text{Temperature Difference, \%} = \frac{\text{Ref. std. temp. (°F + 460)} - \text{Therm. under test temp. (°F + 460)}}{\text{Reference std temp. (°F + 460)}} \times 100 \leq 1.5\,\%$$

** Reference std. is directly traceable to NIST (National Institute of Standards and Technology)*

©2014 TRC Environmental Corp.

AM-CAL-04 Rev. 11
5/20/14

Post Meter Calibration Verification

Project Number: 253282
Last Test Run: 5/11/2016
Operator(s): Gavin Lewis

	Run 1	Run 2	Run 3	Average
Console/Meter ID:	E57	E57	E57	N/A
Run Time (min):	120	120	120	
V_m (cf):	87.25	89.623	87.692	
T_m (°R):	533.77	546.31	542.60	
P_{bar} ("Hg):	29.17	29.17	29.20	
DH_{avg} ("H_2O):	1.66	1.72	1.65	
Md:	28.84	28.84	28.84	
Orifice DH@I:	1.832	1.832	1.832	
Meter Yi:	0.993	0.993	0.993	0.993
Yqa:	1.002	1.002	1.002	1.002

Calibration Status: Pass

Specifications: USEPA Emissions Measurement Center Approved Alternative Method (ALT-009)
Alternative Method 5 Post-Test Calibration (SOP GFM-11)

Post Test Leak Checks

Train Leak Check:	Pass	Pass	Pass
Pump/Orifice Leak Check:	Pass	Pass	Pass

© 2016 TRC Environmental Corp.

Analyst:	G. Rock
Date:	5/10/2016
Project Number:	253282
Client:	Elkhart Brass
Test Location:	Rooftop

Calibration Tools: Include all of the tools from the field calibration kit that you will be using on this project. (See SOP AM-CAL-025 for instructions on re-verification)

Item	ID#	S/N	Calibration Due Date
Digital Caliper	FK007-DC		3/14/2017
Thermometer	FK007-TH00201	122561140	3/14/2017
Barometer	FK-007-BA007-01	90858508	3/14/2017
Calibration Weight, 100 g	FK007-w100-01	2338	3/14/2017
Calibration Weight A, 500 g	FK007-w500A	9272	3/14/2017
Calibration Weight B, 500 g	FK007-w500B	9289	3/14/2017
Type A Angle Finder	FK007-AF00201		3/14/2017
Plastic/Magnetic Torpedo Level	FK007-TL		

© 2014 TRC Environmental Corp.

Pre Test Thermocouple Calibration Checks

Analyst:	G. Rock
Date:	5/10/16
Project Number:	253282
Client:	Elkhart Brass
Test Location:	Rooftop

(See SOP AM-CAL-005 for instructions)

Console/Meter Box ID #	E21
Probe ID#	776
Test Location/Measurement Point Info:	Rooftop
NIST Thermometer ID #	FK007-TH00201

Procedure 1: Calibrate thermocouple against a reference thermometer.

After each test run series, check the accuracy (and, hence, the calibration) of each thermocouple system at ambient temperature, or any other temperature, within the range specified by the manufacturer, using a reference thermometer.

Procedure 2: Check the response of the thermocouple to a change in temperature.

Check the "continuity" of the thermocouple by subjecting it to a change in temperature (e.g., removing it from the stack or touching an ice cube). This step will also check for loose connections and reversed connections.

Measurement	T/C Temp, °F	NIST Thermometer Temp, °F	Difference, °F (± 2)	Continuity Check	Overall Status
Stack	57	57	0.0	Pass	Pass
Filter	60	60	0.0	Pass	Pass
Impinger Exit	57	56	1.0	Pass	Pass
Meter in	59	58	1.0	Pass	Pass
Meter Out	59	58	1.0	Pass	Pass
Probe	57	57	0.0	Pass	Pass

© 2014 TRC Environmental Corp.

Post Test Thermocouple Calibration Checks

Analyst:	G. Rock
Date:	5/12/16
Project Number:	253282
Client:	Elkhart Brass
Test Location:	Rooftop

(See SOP AM-CAL-005 for instructions)

Console/Meter Box ID #	E73
Probe ID#	776
Test Location/Measurement Point Info:	Warehouse
NIST Thermometer ID #	FK007-TH00201

Procedure 1: Calibrate thermocouple against a reference thermometer.

After each test run series, check the accuracy (and, hence, the calibration) of each thermocouple system at ambient temperature, or any other temperature, within the range specified by the manufacturer, using a reference thermometer.

Procedure 2: Check the response of the thermocouple to a change in temperature.

Check the "continuity" of the thermocouple by subjecting it to a change in temperature (e.g., removing it from the stack or touching an ice cube). This step will also check for loose connections and reversed connections.

Measurement	T/C Temp, °F	NIST Thermometer Temp, °F	Difference, °F (± 2)	Continuity Check	Overall Status
Stack	71	71	0.0	Pass	Pass
Filter	70	70	0.0	Pass	Pass
Impinger Exit	70	70	0.0	Pass	Pass
Meter in	71	70	1.0	Pass	Pass
Meter Out	71	70	1.0	Pass	Pass
Probe	70	70	0.0	Pass	Pass

© 2014 TRC Environmental Corp.

PITOT TUBE ASSEMBLY INSPECTION

Analyst:	G. Rock
Date:	5/10/16
Project Number:	253282
Test Location:	Rooftop
EPA Probe Configuration:	Method 5

(See SOP AM-CAL-006 for Instructions)

A B

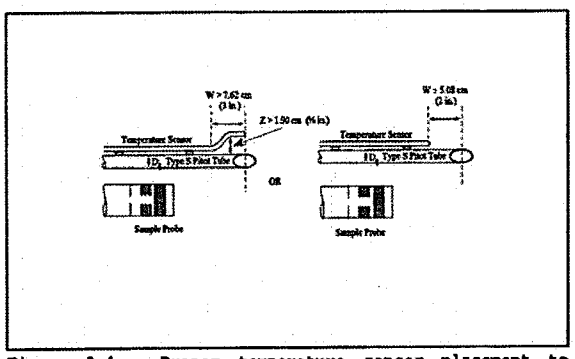

Figure 2-4. Proper temperature sensor placement to prevent interference; D_t between 0.48 and 0.95 cm (3/16 and 3/8 in).

Configuration (A, B or NA): NA

Tube diameter (D_t), Inch: 0.25

Distance "W", Inch: 6.54

Distance "Z" Inch: 1.6

Correct configuration? NA

NA - Temperature sensor not mounted on pitot tube
Configuration A - W >3 inches, Z> 0.75 inches
Configuration B - W at least 2 inches

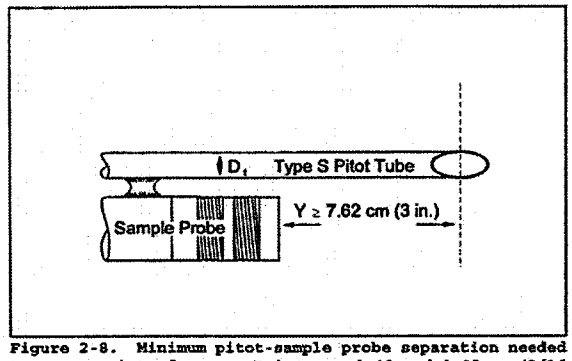

Figure 2-8. Minimum pitot-sample probe separation needed to prevent interference; D_t between 0.48 and 0.95 cm (3/16 and 3/8 in).

Distance "Y": 4.45 (inch)

Correct configuration? Yes

Y must be at least 3 inches

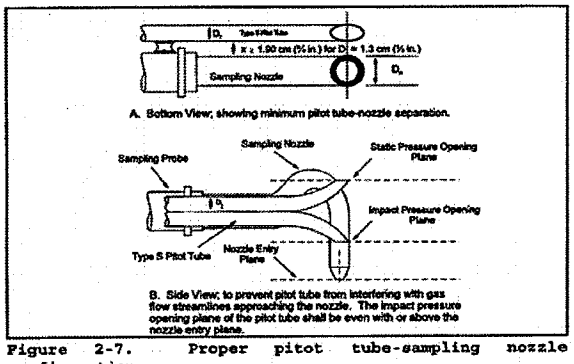

Figure 2-7. Proper pitot tube-sampling nozzle configuration.

Distance "X": 1.32 (inch)
Must be ≥ 0.75 inches

Correct configuration? Yes

© 2014 TRC Environmental Corp.

Top Loading Field Balance Check

Analyst:	G. Rock
Date:	5/3/16
Project Number:	253282
Client:	Elkhart Brass
Test Location:	Rooftop

(See SOP AM-CAL-009 for instructions)

Type of Scale	Lab Top-loading Scale
Scale ID#	8

Tolerance = +/- **0.5**

Individual Weight	Reference Weight Serial Number	Nominal Weight Value	Weight Found	Difference	Pass
W100	2338	100.0	100.0	0.0	YES
W500A	9272	500.0	500.0	0.0	YES
Combination Weights (Use whichever one corresponds to the scale's capacity)					
W100 + W500A	2338 9272	600.0	600.0	0.0	YES
W500A + W500B	9272 9289	1000.0	1000.0	0.0	YES

© 2014 TRC Environmental Corp.

Barometric Pressure Determination

Analyst:	G. Rock
Date:	5/10/16
Project Number:	253282
Client:	Elkhart Brass
Test Location:	Rooftop

Procedure: Use a NIST traceable field barometer for all field measurements. Bring the field barometer to the test location and allow 15 minutes for the instrument to stabilize. Take a measurement before and after each series of tests.

Date:	5/3/2016
Barometer Serial Number:	90858508
Barometer Pressure Prior to Testing:	29.17
Barometer Pressure After Testing:	29.20
Average Barometric Pressure:	29.19

Add Day? No

Date:	-
Barometer Serial Number:	**90858508**
Barometer Pressure Prior to Testing:	
Barometer Pressure After Testing:	-
Average Barometric Pressure:	

Add Day? No

Date:	-
Barometer Serial Number:	**90858508**
Barometer Pressure Prior to Testing:	
Barometer Pressure After Testing:	-
Average Barometric Pressure:	

© 2014 TRC Environmental Corp.

AM-EMT-52 Rev. 11
Revised 11/12/14

Nozzle Calibration

Analyst:	G. Rock
Date:	5/10/16
Project Number:	253282
Client:	Elkhart Brass
Test Location:	Rooftop

(See SOP AM-CAL-007 for Instructions)

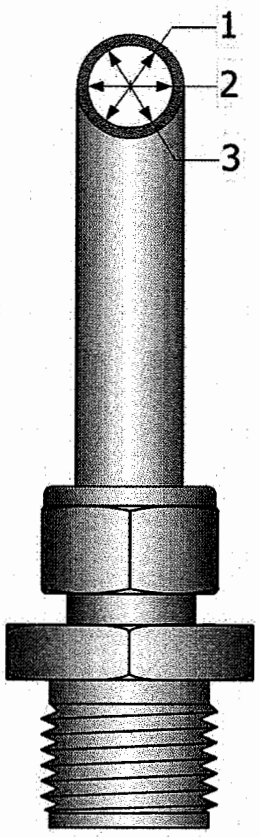

Nozzle ID No.: N/A

Maximum - Minimum ≤ 0.004 inches

Pre Test

0.296	**1**
0.297	**2**
0.295	**3**

PASS - measurements meet specifications.

Average
0.296

© 2014 TRC Environmental Corp.

AM-EMT-52 Rev. 11
Revised 11/12/14

Analyst:	G. Rock
Date:	5/10/2016
Project Number:	253282
Client:	Elkhart Brass
Test Location:	Rooftop

Calibration Tools: Include all of the tools from the field calibration kit that you will be using on this project. (See SOP AM-CAL-025 for instructions on re-verification)

Item	ID#	S/N	Calibration Due Date
Digital Caliper	FK007-DC		3/14/2017
Thermometer	FK007-TH00201	122561140	3/14/2017
Barometer	FK-007-BA007-01	90858508	3/14/2017
Calibration Weight, 100 g	FK007-w100-01	2338	3/14/2017
Calibration Weight A, 500 g	FK007-w500A	9272	3/14/2017
Calibration Weight B, 500 g	FK007-w500B	9289	3/14/2017
Type A Angle Finder	FK007-AF00201		3/14/2017
Plastic/Magnetic Torpedo Level	FK007-TL		

© 2014 TRC Environmental Corp.

Pre Test Thermocouple Calibration Checks

Analyst:	G. Rock
Date:	5/10/16
Project Number:	253282
Client:	Elkhart Brass
Test Location:	Rooftop

(See SOP AM-CAL-005 for instructions)

Console/Meter Box ID #	E20
Probe ID#	790
Test Location/Measurement Point Info:	Rooftop
NIST Thermometer ID #	FK007-TH00201

Procedure 1: Calibrate thermocouple against a reference thermometer.

After each test run series, check the accuracy (and, hence, the calibration) of each thermocouple system at ambient temperature, or any other temperature, within the range specified by the manufacturer, using a reference thermometer.

Procedure 2: Check the response of the thermocouple to a change in temperature.

Check the "continuity" of the thermocouple by subjecting it to a change in temperature (e.g., removing it from the stack or touching an ice cube). This step will also check for loose connections and reversed connections.

Measurement	T/C Temp, °F	NIST Thermometer Temp, °F	Difference, °F (± 2)	Continuity Check	Overall Status
Stack	57	55	2.0	Pass	Pass
Filter	59	58	1.0	Pass	Pass
Impinger Exit	57	57	0.0	Pass	Pass
Meter in	60	61	1.0	Pass	Pass
Meter Out	61	62	1.0	Pass	Pass
Probe	58	60	2.0	Pass	Pass

© 2014 TRC Environmental Corp.

Post Test Thermocouple Calibration Checks

Analyst:	G. Rock
Date:	5/12/16
Project Number:	253282
Client:	Elkhart Brass
Test Location:	Rooftop

(See SOP AM-CAL-005 for instructions)

Console/Meter Box ID #	E20
Probe ID#	790
Test Location/Measurement Point Info:	Warehouse
NIST Thermometer ID #	FK007-TH00201

Procedure 1: Calibrate thermocouple against a reference thermometer.

After each test run series, check the accuracy (and, hence, the calibration) of each thermocouple system at ambient temperature, or any other temperature, within the range specified by the manufacturer, using a reference thermometer.

Procedure 2: Check the response of the thermocouple to a change in temperature.

Check the "continuity" of the thermocouple by subjecting it to a change in temperature (e.g., removing it from the stack or touching an ice cube). This step will also check for loose connections and reversed connections.

Measurement	T/C Temp, °F	NIST Thermometer Temp, °F	Difference, °F (± 2)	Continuity Check	Overall Status
Stack	70	71	1.0	Pass	Pass
Filter	70	70	0.0	Pass	Pass
Impinger Exit	69	70	1.0	Pass	Pass
Meter in	71	71	0.0	Pass	Pass
Meter Out	71	70	1.0	Pass	Pass
Probe	70	70	0.0	Pass	Pass

© 2014 TRC Environmental Corp.

PRE TEST TYPE S PITOT TUBE INSPECTION

(See SOP AM-CAL-006 for Instructions)

Pitot Tube No. : 790 Date: 5/10/2016 Analyst: G. Rock

Project Number: 253282 Client: Elkhart Brass Test Location: Rooftop

Digital Caliper ID: FK007-DC Level ID: FK007-TL Angle Finder ID: FK007-AF00201

Pitot tube assembly level? x yes ____ no

Pitot tube openings damaged? ____ yes (explain below) x no

α_1 = 0.5 ° (<10°), α_2 = 0.5 ° (<10°) z = A tan γ = 0.000 (in.); (<0.125 in.)

β_1 = 0 ° (<5°), β_2 = 1 ° (<5°) w = A tan θ = 0.000 (in.); (<0.03125 in.)

γ = 0 °, θ = 0 °, A = 0.740 (in.) P_A = 0.370 (in.), P_B = 0.370 (in.), D_t* = 0.250 (in.)

Comments:

Note: *D_t = Recommended nominal pitot tube diameter of 0.250 (in.) or 0.375 (in.).

Calibration required? ____ yes X no

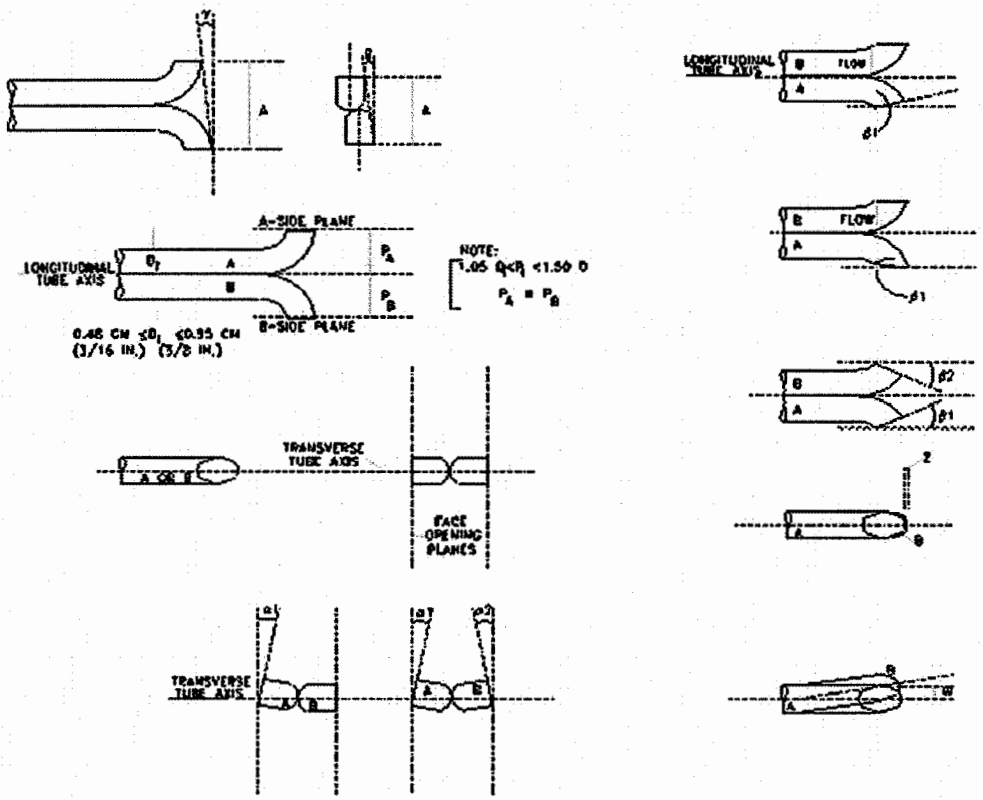

© 2014 TRC Environmental Corp.

AM-EMT-52 Rev. 11
Revised 11/12/14

POST TEST TYPE S PITOT TUBE INSPECTION

(See SOP AM-CAL-006 for Instructions)

Pitot Tube No. : 790 Date: 5/12/2016 Analyst: G. Rock

Project Number: 253282 Client: Elkhart Brass Test Location: Warehouse

Digital Caliper ID: FK007-DC Level ID: FK007-TL Angle Finder ID: FK007-AF00201

Pitot tube assembly level? x yes ____ no

Pitot tube openings damaged? ____ yes (explain below) x no

α_1 = 0.5 ° (<10°), α_2 = 0.5 ° (<10°) z = A tan γ = 0.000 (in.); (<0.125 in.)

β_1 = 0 ° (<5°), β_2 = 1 ° (<5°) w = A tan θ = 0.000 (in.); (<0.03125 in.)

γ = 0 °, θ = 0 °, A = 0.740 (in.) P_A = 0.370 (in.), P_B = 0.370 (in.), D_t* = 0.250 (in.)

Comments: ____

Note: *D_t = Recommended nominal pitot tube diameter of 0.250 (in.) or 0.375 (in.).

Calibration required? ____ yes X no

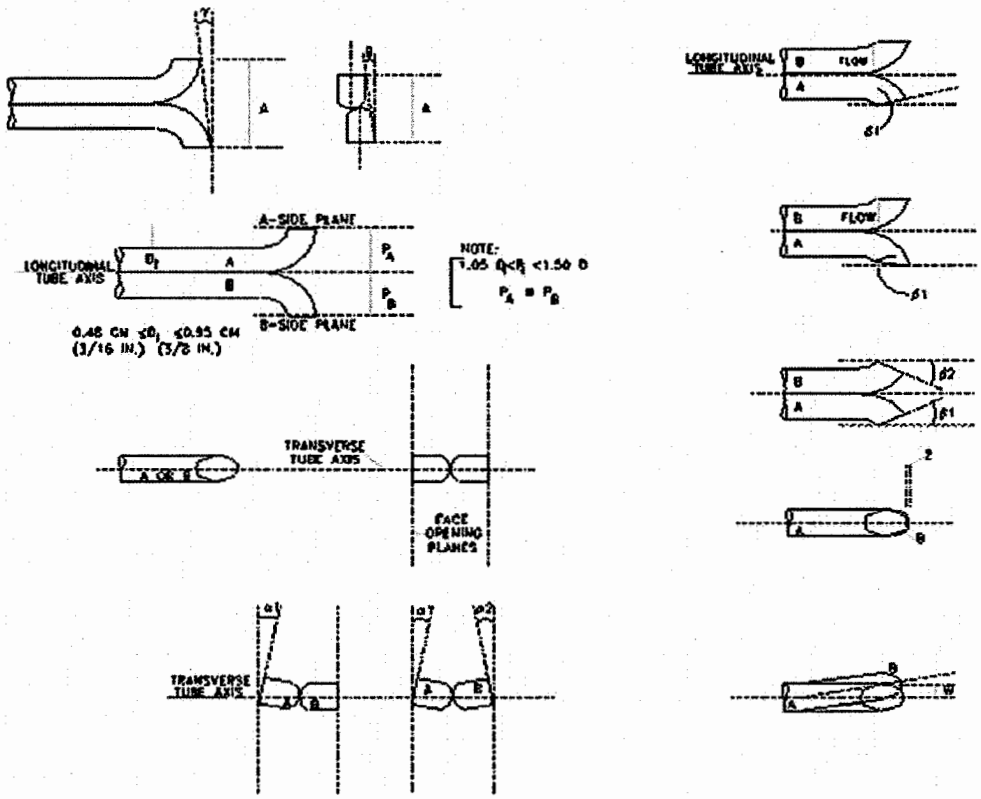

© 2014 TRC Environmental Corp.

AM-EMT-52 Rev. 11
Revised 11/12/14

TRC

PITOT TUBE ASSEMBLY INSPECTION

Analyst:	G. Rock
Date:	5/10/16
Project Number:	253282
Test Location:	Rooftop
EPA Probe Configuration:	Method 5

(See SOP AM-CAL-006 for Instructions)

A **B**

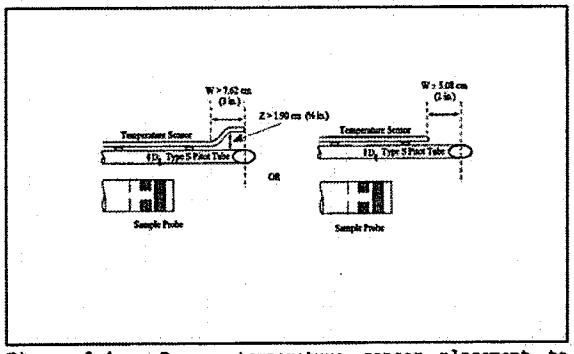

Figure 2-4. Proper temperature sensor placement to prevent interference; D_t between 0.48 and 0.95 cm (3/16 and 3/8 in).

Configuration (A, B or NA): NA

Tube diameter (D_t), Inch: 0.25

Distance "W", Inch: 7.41

Distance "Z" Inch: 1.401

Correct configuration? NA

NA - Temperature sensor not mounted on pitot tube
Configuration A - W >3 inches, Z> 0.75 inches
Configuration B - W at least 2 inches

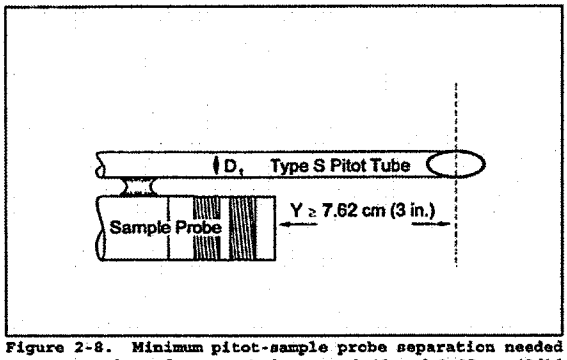

Figure 2-8. Minimum pitot-sample probe separation needed to prevent interference; D_t between 0.48 and 0.95 cm (3/16 and 3/8 in).

Distance "Y": 4.605 (inch)

Correct configuration? Yes

Y must be at least 3 inches

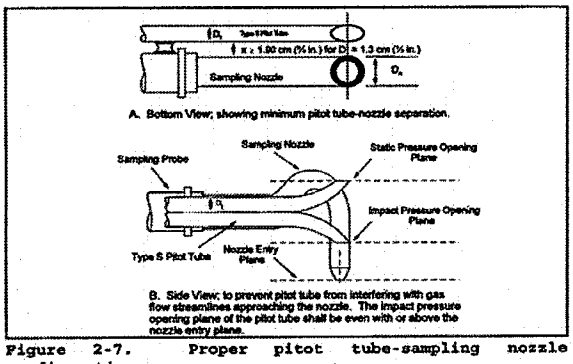

Figure 2-7. Proper pitot tube-sampling nozzle configuration.

Distance "X": 1.2 (inch)
Must be ≥ 0.75 inches

Correct configuration? Yes

© 2014 TRC Environmental Corp.

TRC

Top Loading Field Balance Check

Analyst:	G. Rock
Date:	5/3/16
Project Number:	253282
Client:	Elkhart Brass
Test Location:	Rooftop

(See SOP AM-CAL-009 for instructions)

Type of Scale	Lab Top-loading Scale
Scale ID#	8

Tolerance = +/- **0.5**

Individual Weight	Reference Weight Serial Number	Nominal Weight Value	Weight Found	Difference	Pass
W100	2338	100.0	100.0	0.0	YES
W500A	9272	500.0	500.0	0.0	YES
Combination Weights (Use whichever one corresponds to the scale's capacity)					
W100 + W500A	2338 9272	600.0	600.0	0.0	YES
W500A + W500B	9272 9289	1000.0	1000.0	0.0	YES

© 2014 TRC Environmental Corp.

AM-EMT-52 Rev. 11
Revised 11/12/14

Barometric Pressure Determination

Analyst:	G. Rock
Date:	5/11/16
Project Number:	253282
Client:	Elkhart Brass
Test Location:	Rooftop

Procedure: Use a NIST traceable field barometer for all field measurements. Bring the field barometer to the test location and allow 15 minutes for the instrument to stabilize. Take a measurement before and after each series of tests.

Date:	5/11/2016
Barometer Serial Number:	90858508
Barometer Pressure Prior to Testing:	29.17
Barometer Pressure After Testing:	29.20
Average Barometric Pressure:	29.19

Add Day? No

Date:	-
Barometer Serial Number:	**90858508**
Barometer Pressure Prior to Testing:	
Barometer Pressure After Testing:	-
Average Barometric Pressure:	

Add Day? No

Date:	-
Barometer Serial Number:	**90858508**
Barometer Pressure Prior to Testing:	
Barometer Pressure After Testing:	-
Average Barometric Pressure:	

© 2014 TRC Environmental Corp.

Nozzle Calibration

Analyst:	G. Rock
Date:	5/10/16
Project Number:	253282
Client:	Elkhart Brass
Test Location:	Rooftop

(See SOP AM-CAL-007 for Instructions)

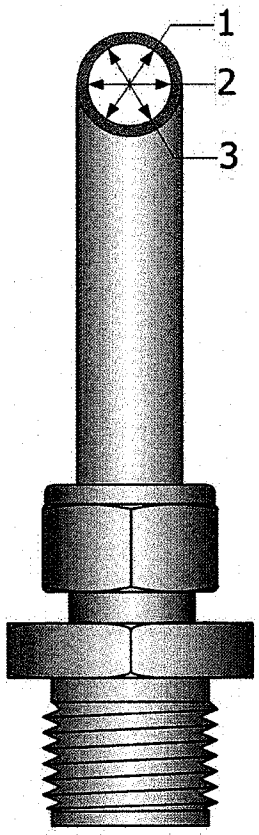

Nozzle ID No.: N/A

Maximum - Minimum ≤ 0.004 inches

Pre Test

0.298	**1**
0.298	**2**
0.299	**3**

PASS - measurements meet specifications.

Average
0.298

© 2014 TRC Environmental Corp.

AM-EMT-52 Rev. 11
Revised 11/12/14

Analyst:	Ben Cacao
Date:	5/10/2016
Project Number:	253282
Client:	Elkhart Brass
Test Location:	Melt 2 Stack

Calibration Tools: Include all of the tools from the field calibration kit that you will be using on this project. (See SOP AM-CAL-025 for instructions on re-verification)

Item	ID#	S/N	Calibration Due Date
Digital Caliper	FK002/DC002		1/26/2017
Thermometer	FK002/TH002	111892913	1/26/2017
Barometer	FK002/BA002	111944648	7/27/2016
Calibration Weight, 100 g	FK002/W100-002	8138	1/26/2017
Calibration Weight A, 500 g	FK002/W500-002A	9184	1/26/2017
Calibration Weight B, 500 g	FK002/W500-002B	4588	1/26/2017
Type A Angle Finder	FK002/AF002		1/26/2017
Plastic/Magnetic Torpedo Level	FK002/TL002		

© 2014 TRC Environmental Corp.

Pre Test Thermocouple Calibration Checks

Analyst:	Ben Cacao
Date:	5/10/16
Project Number:	253282
Client:	Elkhart Brass
Test Location:	Melt 2 Stack

(See SOP AM-CAL-005 for instructions)

Console/Meter Box ID #	E53
Probe ID#	347
Test Location/Measurement Point Info:	On roof besides stack platform
NIST Thermometer ID #	FK002/TH002

Procedure 1: Calibrate thermocouple against a reference thermometer.

After each test run series, check the accuracy (and, hence, the calibration) of each thermocouple system at ambient temperature, or any other temperature, within the range specified by the manufacturer, using a reference thermometer.

Procedure 2: Check the response of the thermocouple to a change in temperature.

Check the "continuity" of the thermocouple by subjecting it to a change in temperature (e.g., removing it from the stack or touching an ice cube). This step will also check for loose connections and reversed connections.

Measurement	T/C Temp, °F	NIST Thermometer Temp, °F	Difference, °F (± 2)	Continuity Check	Overall Status
Stack	70	70.4	0.4	Pass	Pass
Filter	70	70.7	0.7	Pass	Pass
Impinger Exit	70	70.4	0.4	Pass	Pass
Meter in	71	72	1.0	Pass	Pass
Meter Out	71	72	1.0	Pass	Pass
Probe	70	70.6	0.6	Pass	Pass

© 2014 TRC Environmental Corp.

Post Test Thermocouple Calibration Checks

Analyst:	Ben Cacao
Date:	5/11/16
Project Number:	253282
Client:	Elkhart Brass
Test Location:	Melt 2 Stack

(See SOP AM-CAL-005 for instructions)

Console/Meter Box ID #	E53
Probe ID#	347
Test Location/Measurement Point Info:	On roof besides stack platform
NIST Thermometer ID #	FK002/TH002

Procedure 1: Calibrate thermocouple against a reference thermometer.

After each test run series, check the accuracy (and, hence, the calibration) of each thermocouple system at ambient temperature, or any other temperature, within the range specified by the manufacturer, using a reference thermometer.

Procedure 2: Check the response of the thermocouple to a change in temperature.

Check the "continuity" of the thermocouple by subjecting it to a change in temperature (e.g., removing it from the stack or touching an ice cube). This step will also check for loose connections and reversed connections.

Measurement	T/C Temp, °F	NIST Thermometer Temp, °F	Difference, °F (± 2)	Continuity Check	Overall Status
Stack	78	78.6	0.6	Pass	Pass
Filter	78	78.5	0.5	Pass	Pass
Impinger Exit	78	78.7	0.7	Pass	Pass
Meter in	79	80	1.0	Pass	Pass
Meter Out	79	80	1.0	Pass	Pass
Probe	78	78.6	0.6	Pass	Pass

© 2014 TRC Environmental Corp.

Pre Test Thermocouple Calibration Checks

Analyst:	Ben Cacao
Date:	5/10/16
Project Number:	253282
Client:	Elkhart Brass
Test Location:	Melt 2 Stack

(See SOP AM-CAL-005 for instructions)

Console/Meter Box ID #	E37
Probe ID#	793
Test Location/Measurement Point Info:	On roof besides stack platform
NIST Thermometer ID #	FK002/TH002

Procedure 1: Calibrate thermocouple against a reference thermometer.

After each test run series, check the accuracy (and, hence, the calibration) of each thermocouple system at ambient temperature, or any other temperature, within the range specified by the manufacturer, using a reference thermometer.

Procedure 2: Check the response of the thermocouple to a change in temperature.

Check the "continuity" of the thermocouple by subjecting it to a change in temperature (e.g., removing it from the stack or touching an ice cube). This step will also check for loose connections and reversed connections.

Measurement	T/C Temp, °F	NIST Thermometer Temp, °F	Difference, °F (± 2)	Continuity Check	Overall Status
Stack	71	71.9	0.9	Pass	Pass
Filter	71	71.5	0.5	Pass	Pass
Impinger Exit	70	70.6	0.6	Pass	Pass
Meter in	72	73.1	1.1	Pass	Pass
Meter Out	72	73.1	1.1	Pass	Pass
Probe	71	71.7	0.7	Pass	Pass

© 2014 TRC Environmental Corp.

Pre Test Thermocouple Calibration Checks

Analyst:	Ben Cacao
Date:	5/11/16
Project Number:	253282
Client:	Elkhart Brass
Test Location:	Melt 2 Stack

(See SOP AM-CAL-005 for instructions)

Console/Meter Box ID #	E37
Probe ID#	793
Test Location/Measurement Point Info:	On roof besides stack platform
NIST Thermometer ID #	FK002/TH002

Procedure 1: Calibrate thermocouple against a reference thermometer.

After each test run series, check the accuracy (and, hence, the calibration) of each thermocouple system at ambient temperature, or any other temperature, within the range specified by the manufacturer, using a reference thermometer.

Procedure 2: Check the response of the thermocouple to a change in temperature.

Check the "continuity" of the thermocouple by subjecting it to a change in temperature (e.g., removing it from the stack or touching an ice cube). This step will also check for loose connections and reversed connections.

Measurement	T/C Temp, °F	NIST Thermometer Temp, °F	Difference, °F (± 2)	Continuity Check	Overall Status
Stack	79	80	1.0	Pass	Pass
Filter	79	79.8	0.8	Pass	Pass
Impinger Exit	78	78.4	0.4	Pass	Pass
Meter in	80	81.5	1.5	Pass	Pass
Meter Out	80	81.5	1.5	Pass	Pass
Probe	79	79.8	0.8	Pass	Pass

© 2014 TRC Environmental Corp.

PRE TEST TYPE S PITOT TUBE INSPECTION

(See SOP AM-CAL-006 for Instructions)

Pitot Tube No. : 347 Date: 5/10/2016 Analyst: Ben Cacao

Project Number: 253282 Client: Elkhart Brass Test Location: Melt 2 Stack

Digital Caliper ID: FK002/DC002 Level ID: FK002/TL002 Angle Finder ID: FK002/AF002

Pitot tube assembly level? x yes ____ no

Pitot tube openings damaged? ____ yes (explain below) x no

α_1 = 0 ° (<10°), α_2 = 0 ° (<10°) z = A tan γ = 0.026 (in.); (<0.125 in.)

β_1 = 1 ° (<5°), β_2 = 1 ° (<5°) w = A tan θ = 0.000 (in.); (<0.03125 in.)

γ = 2 °, θ = 0 °, A = 0.742 (in.) P_A = 0.371 (in.), P_B = 0.371 (in.), D_t* = 0.250 (in.)

Comments: ____

Note: *D_t = Recommended nominal pitot tube diameter of 0.250 (in.) or 0.375 (in.).

Calibration required? ____ yes X no

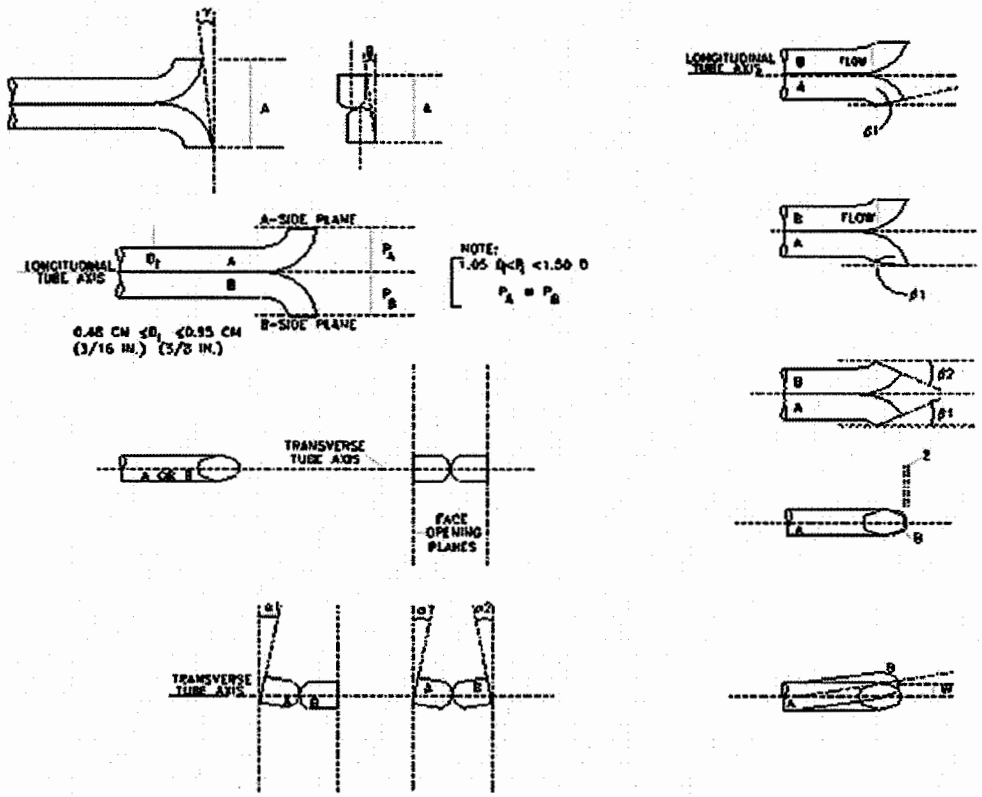

© 2014 TRC Environmental Corp.

POST TEST TYPE S PITOT TUBE INSPECTION

(See SOP AM-CAL-006 for Instructions)

Pitot Tube No. : 347 Date: 5/11/2016 Analyst: Ben Cacao

Project Number: 253282 Client: Elkhart Brass Test Location: Melt 2 Stack

Digital Caliper ID: FK002/DC002 Level ID: FK002/TL002 Angle Finder ID: FK002/AF002

Pitot tube assembly level? x yes ____ no

Pitot tube openings damaged? ____ yes (explain below) x no

α_1 = 0 ° (<10°), α_2 = 0 ° (<10°) z = A tan γ = 0.026 (in.); (<0.125 in.)

β_1 = 1 ° (<5°), β_2 = 1 ° (<5°) w = A tan θ = 0.000 (in.); (<0.03125 in.)

γ = 2 °, θ = 0 °, A = 0.742 (in.) P_A = 0.371 (in.), P_B = 0.371 (in.), D_t* = 0.250 (in.)

Comments: ____

Note: *D_t = Recommended nominal pitot tube diameter of 0.250 (in.) or 0.375 (in.).

Calibration required? ____ yes X no

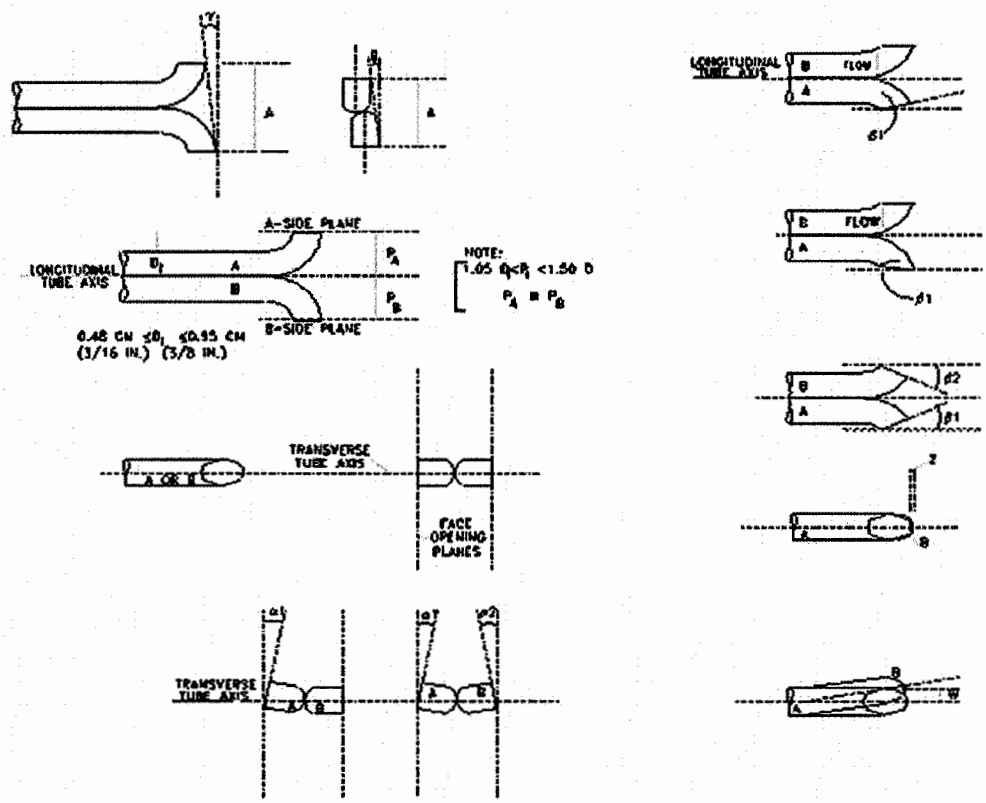

© 2014 TRC Environmental Corp.

AM-EMT-52 Rev. 11
Revised 11/12/14

PRE TEST TYPE S PITOT TUBE INSPECTION

(See SOP AM-CAL-006 for Instructions)

Pitot Tube No. : 793 Date: 5/10/2016 Analyst: Ben Cacao

Project Number: 253282 Client: Elkhart Brass Test Location: Melt 2 Stack

Digital Caliper ID: FK002/DC002 Level ID: FK002/TL002 Angle Finder ID: FK002/AF002

Pitot tube assembly level? x yes _____ no

Pitot tube openings damaged? _____ yes (explain below) x no

α_1 = 0 ° (<10°), α_2 = 1 ° (<10°) z = A tan γ = 0.013 (in.); (<0.125 in.)

β_1 = 1 ° (<5°), β_2 = 1 ° (<5°) w = A tan θ = 0.000 (in.); (<0.03125 in.)

γ = 1 °, θ = 0 °, A = 0.734 (in.) P_A = 0.367 (in.), P_B = 0.367 (in.), D_t* = 0.250 (in.)

Comments: _____

Note: *D_t = Recommended nominal pitot tube diameter of 0.250 (in.) or 0.375 (in.).

Calibration required? _____ yes X no

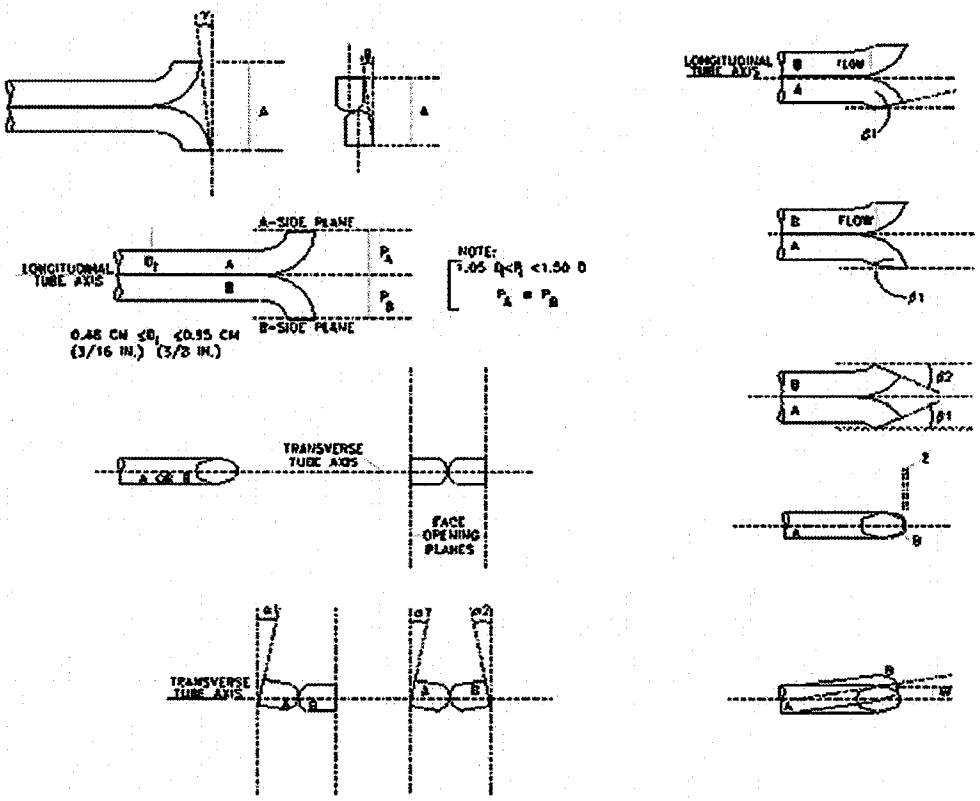

© 2014 TRC Environmental Corp.

POST TEST TYPE S PITOT TUBE INSPECTION

(See SOP AM-CAL-006 for Instructions)

Pitot Tube No. : 793 Date: 5/11/2016 Analyst: Ben Cacao

Project Number: 253282 Client: Elkhart Brass Test Location: Melt 2 Stack

Digital Caliper ID: FK002/DC002 Level ID: FK002/TL002 Angle Finder ID: FK002/AF002

Pitot tube assembly level? x yes _____ no

Pitot tube openings damaged? _____ yes (explain below) x no

α_1 = 0 ° (<10°), α_2 = 1 ° (<10°) z = A tan γ = 0.013 (in.); (<0.125 in.)

β_1 = 1 ° (<5°), β_2 = 1 ° (<5°) w = A tan θ = 0.000 (in.); (<0.03125 in.)

γ = 1 °, θ = 0 °, A = 0.734 (in.) P_A = 0.367 (in.), P_B = 0.367 (in.), D_t* = 0.250 (in.)

Comments: _____

Note: *D_t = Recommended nominal pitot tube diameter of 0.250 (in.) or 0.375 (in.).

Calibration required? _____ yes X no

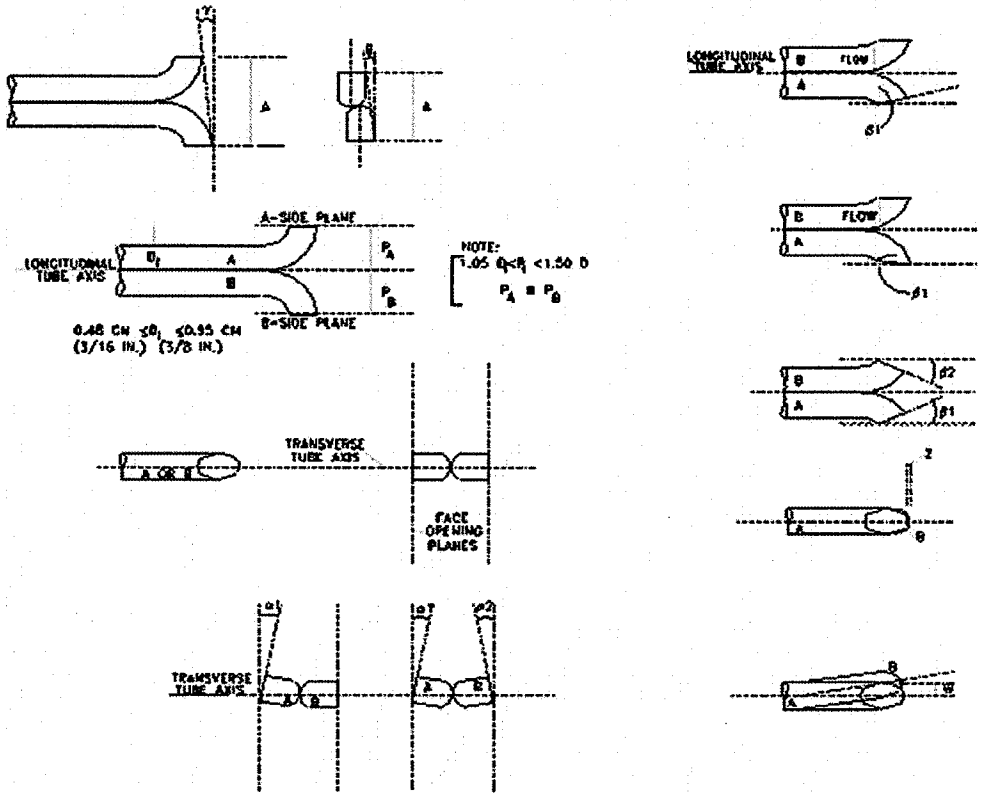

© 2014 TRC Environmental Corp.

AM-EMT-52 Rev. 11
Revised 11/12/14

TRC

PITOT TUBE ASSEMBLY INSPECTION

Analyst:	Ben Cacao
Date:	5/10/16
Project Number:	253282
Test Location:	Melt 2 Stack
EPA Probe Configuration:	Method 5

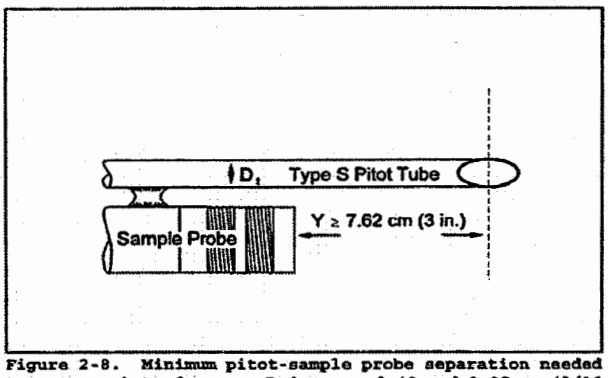

Figure 2-8. Minimum pitot-sample probe separation needed to prevent interference; D_t between 0.48 and 0.95 cm (3/16 and 3/8 in).

Distance "Y" : 5 (inch)

Correct configuration? Yes
Y must be at least 3 inches

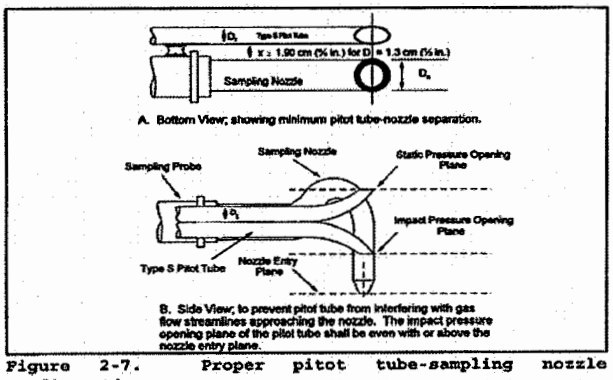

Figure 2-7. Proper pitot tube-sampling nozzle configuration.

Distance "X" : 1 (inch)
Must be ≥ 0.75 inches

Correct configuration? Yes

© 2014 TRC Environmental Corp.

PITOT TUBE ASSEMBLY INSPECTION

Analyst:	Ben Cacao
Date:	5/10/16
Project Number:	253282
Test Location:	Melt 2 Stack
EPA Probe Configuration:	Method 5

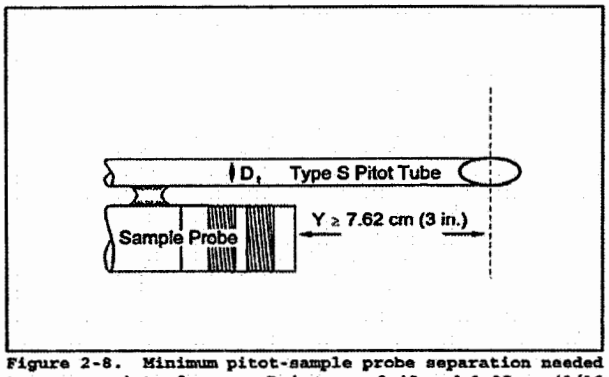

Figure 2-8. Minimum pitot-sample probe separation needed to prevent interference; D_t between 0.48 and 0.95 cm (3/16 and 3/8 in).

Distance "Y" : 5 (inch)

Correct configuration? Yes
Y must be at least 3 inches

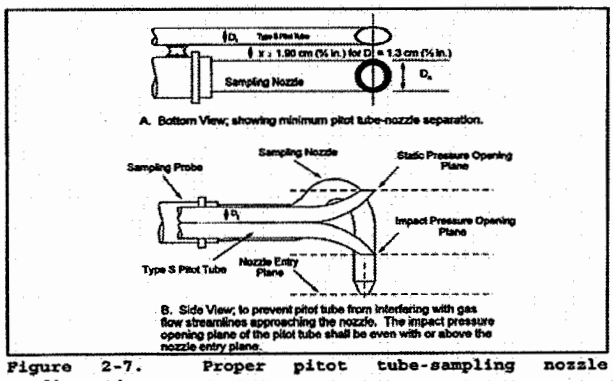

Figure 2-7. Proper pitot tube-sampling nozzle configuration.

Distance "X" : 1.25 (inch)
Must be ≥ 0.75 inches

Correct configuration? Yes

© 2014 TRC Environmental Corp.

Barometric Pressure Determination

Analyst:	Ben Cacao
Date:	5/10/16
Project Number:	253282
Client:	Elkhart Brass
Test Location:	Melt 2 Stack

Procedure: Use a NIST traceable field barometer for all field measurements. Bring the field barometer to the test location and allow 15 minutes for the instrument to stabilize. Take a measurement before and after each series of tests.

Date:	5/11/2016
Barometer Serial Number:	111944648
Barometer Pressure Prior to Testing:	29.17
Barometer Pressure After Testing:	29.20
Average Barometric Pressure:	29.19

Add Day? No

© 2014 TRC Environmental Corp.

AM-EMT-52 Rev. 11
Revised 11/12/14

Nozzle Calibration

Analyst:	Ben Cacao
Date:	5/10/16
Project Number:	253282
Client:	Elkhart Brass
Test Location:	Melt 2 Stack

(See SOP AM-CAL-007 for Instructions)

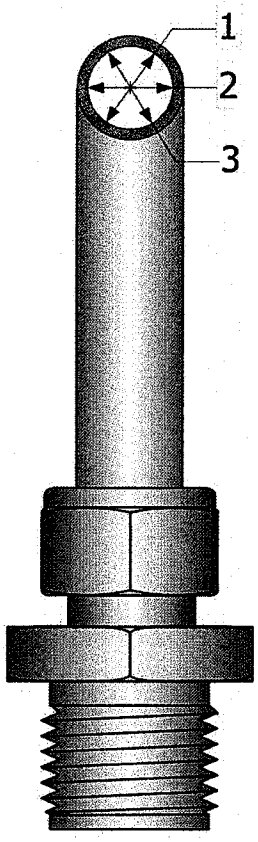

Nozzle ID No.: N/A

Maximum - Minimum ≤ 0.004 inches

Pre Test

0.298	**1**
0.299	**2**
0.297	**3**

PASS - measurements meet specifications.

Average
0.298

© 2014 TRC Environmental Corp.

AM-EMT-52 Rev. 11
Revised 11/12/14

Nozzle Calibration

Analyst:	Ben Cacao
Date:	5/10/16
Project Number:	253282
Client:	Elkhart Brass
Test Location:	Melt 2 Stack

(See SOP AM-CAL-007 for Instructions)

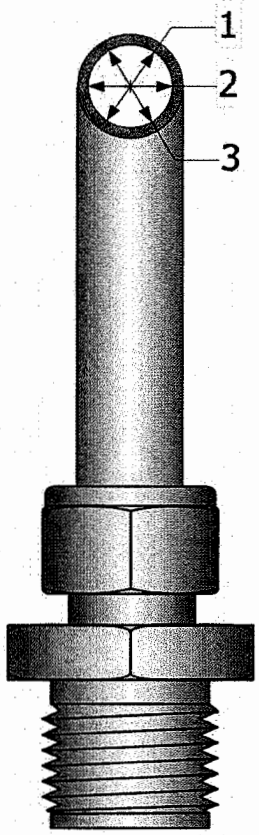

Nozzle ID No.: N/A

Maximum - Minimum ≤ 0.004 inches

Pre Test

0.301	**1**
0.300	**2**
0.300	**3**

PASS - measurements meet specifications.

Average
0.300

© 2014 TRC Environmental Corp.

AM-EMT-52 Rev. 11
Revised 11/12/14

Analyst:	Gavin Lewis
Date:	5/10/2016
Project Number:	253282
Client:	Elkhart Brass
Test Location:	Tap Hood

Calibration Tools: Include all of the tools from the field calibration kit that you will be using on this project. (See SOP AM-CAL-025 for instructions on re-verification)

Item	ID#	S/N	Calibration Due Date
Digital Caliper	DC011-02		1/19/2017
Thermometer	TH011	122436575	1/19/2017
Barometer	BA009	111940972	7/20/2016
Calibration Weight, 100 g	W100-011	2376	1/19/2017
Calibration Weight A, 500 g	W500-011A	9282	1/19/2017
Calibration Weight B, 500 g	W500-011B	9288	1/19/2017
Type A Angle Finder	AF011		1/19/2017
Plastic/Magnetic Torpedo Level	TL011		

© 2014 TRC Environmental Corp.

Pre Test Thermocouple Calibration Checks

Analyst:	Gavin Lewis
Date:	5/10/16
Project Number:	253282
Client:	Elkhart Brass
Test Location:	Tap Hood

(See SOP AM-CAL-005 for instructions)

Console/Meter Box ID #	E19
Probe ID#	801
Test Location/Measurement Point Info:	Stack
NIST Thermometer ID #	TH011

Procedure 1: Calibrate thermocouple against a reference thermometer.

After each test run series, check the accuracy (and, hence, the calibration) of each thermocouple system at ambient temperature, or any other temperature, within the range specified by the manufacturer, using a reference thermometer.

Procedure 2: Check the response of the thermocouple to a change in temperature.

Check the "continuity" of the thermocouple by subjecting it to a change in temperature (e.g., removing it from the stack or touching an ice cube). This step will also check for loose connections and reversed connections.

Measurement	T/C Temp, °F	NIST Thermometer Temp, °F	Difference, °F (± 2)	Continuity Check	Overall Status
Stack	54	55.4	1.4	Pass	Pass
Filter	58	58.7	0.7	Pass	Pass
Impinger Exit	54	55.4	1.4	Pass	Pass
Meter in	57	58.1	1.1	Pass	Pass
Meter Out	57	58.1	1.1	Pass	Pass
Probe	60	59.1	0.9	Pass	Pass

© 2014 TRC Environmental Corp.

Post Test Thermocouple Calibration Checks

Analyst:	Gavin Lewis
Date:	5/12/16
Project Number:	253282
Client:	Elkhart Brass
Test Location:	Tap Hood

(See SOP AM-CAL-005 for instructions)

Console/Meter Box ID #	E19
Probe ID#	801
Test Location/Measurement Point Info:	Stack
NIST Thermometer ID #	TH011

Procedure 1: Calibrate thermocouple against a reference thermometer.

After each test run series, check the accuracy (and, hence, the calibration) of each thermocouple system at ambient temperature, or any other temperature, within the range specified by the manufacturer, using a reference thermometer.

Procedure 2: Check the response of the thermocouple to a change in temperature.

Check the "continuity" of the thermocouple by subjecting it to a change in temperature (e.g., removing it from the stack or touching an ice cube). This step will also check for loose connections and reversed connections.

Measurement	T/C Temp, °F	NIST Thermometer Temp, °F	Difference, °F (± 2)	Continuity Check	Overall Status
Stack	69	69.3	0.3	Pass	Pass
Filter	71	70.1	0.9	Pass	Pass
Impinger Exit	68	69.3	1.3	Pass	Pass
Meter in	70	69.8	0.2	Pass	Pass
Meter Out	70	70.2	0.2	Pass	Pass
Probe	70	70.5	0.5	Pass	Pass

© 2014 TRC Environmental Corp.

PRE TEST TYPE S PITOT TUBE INSPECTION

(See SOP AM-CAL-006 for Instructions)

Pitot Tube No. : 801 Date: 5/10/2016 Analyst: Gavin Lewis

Project Number: 253282 Client: Elkhart Brass Test Location: Tap Hood

Digital Caliper ID: DC011-02 Level ID: TL011 Angle Finder ID: AF011

Pitot tube assembly level? X yes ____ no

Pitot tube openings damaged? ____ yes (explain below) X no

α_1 = 3 ° (<10°), α_2 = 2 ° (<10°) z = A tan γ = 0.000 (in.); (<0.125 in.)

β_1 = 2 ° (<5°), β_2 = 0 ° (<5°) w = A tan θ = 0.000 (in.); (<0.03125 in.)

γ = 0 °, θ = 0 °, A = 0.721 (in.) P_A = 0.360 (in.), P_B = 0.360 (in.), D_t* = 0.250 (in.)

Comments: _____

Note: *D_t = Recommended nominal pitot tube diameter of 0.250 (in.) or 0.375 (in.).

Calibration required? ____ yes X no

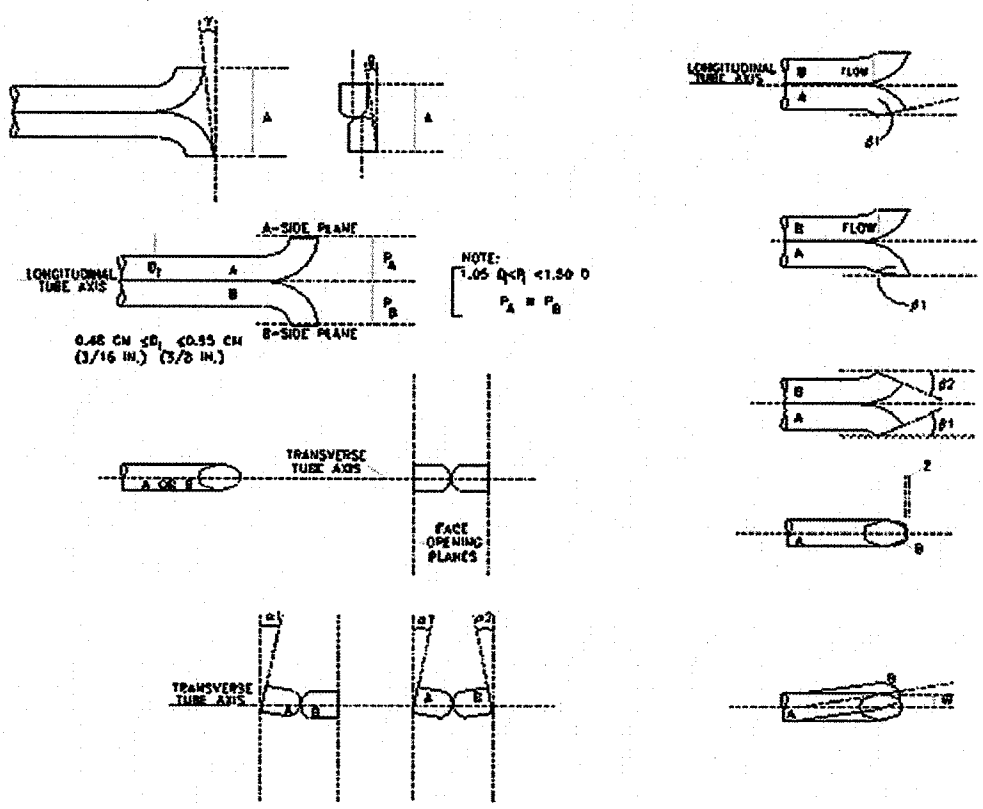

© 2014 TRC Environmental Corp.

AM-EMT-52 Rev. 11
Revised 11/12/14

POST TEST TYPE S PITOT TUBE INSPECTION

(See SOP AM-CAL-006 for Instructions)

Pitot Tube No. : 801 Date: 5/12/2016 Analyst: Gavin Lewis

Project Number: 253282 Client: Elkhart Brass Test Location: Tap Hood

Digital Caliper ID: DC011-02 Level ID: TL011 Angle Finder ID: AF011

Pitot tube assembly level? X yes ____ no

Pitot tube openings damaged? ____ yes (explain below) X no

α_1 = 3 ° (<10°), α_2 = 2 ° (<10°) z = A tan γ = 0.000 (in.); (<0.125 in.)

β_1 = 2 ° (<5°), β_2 = 0 ° (<5°) w = A tan θ = 0.025 (in.); (<0.03125 in.)

γ = 0 °, θ = 2 °, A = 0.721 (in.) P_A = 0.360 (in.), P_B = 0.360 (in.), D_t* = 0.250 (in.)

Comments: _____

Note: *D_t = Recommended nominal pitot tube diameter of 0.250 (in.) or 0.375 (in.).

Calibration required? ____ yes X no

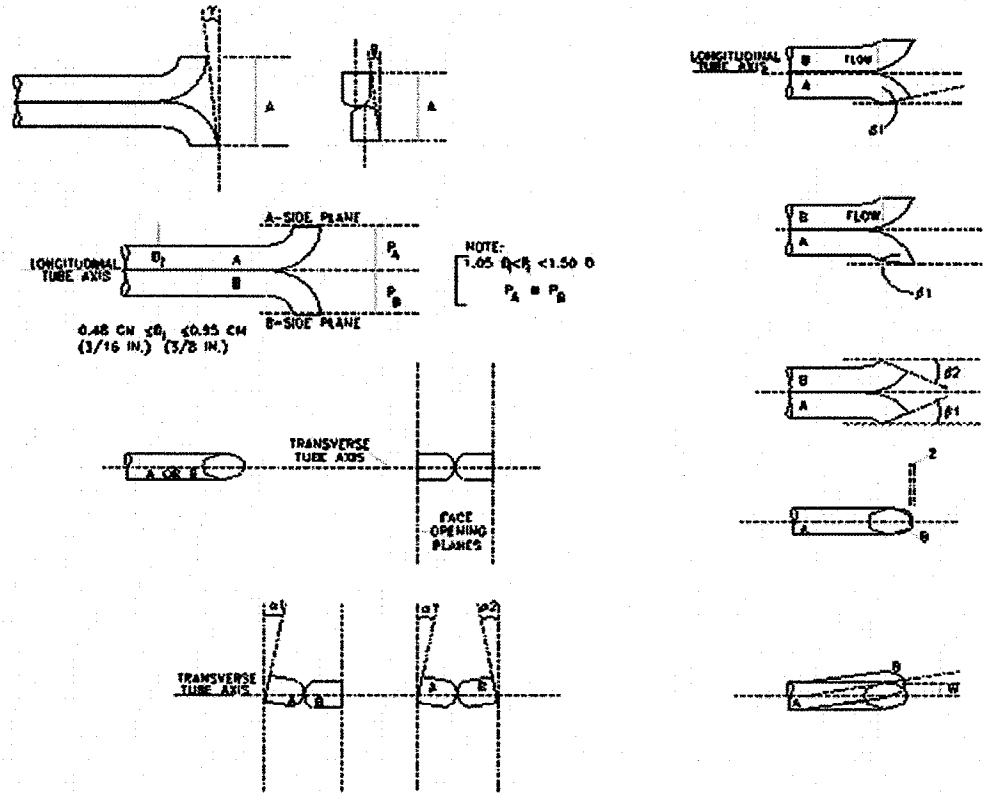

© 2014 TRC Environmental Corp.

AM-EMT-52 Rev. 11
Revised 11/12/14

TRC

PITOT TUBE ASSEMBLY INSPECTION

Analyst:	Gavin Lewis
Date:	5/10/16
Project Number:	253282
Test Location:	Tap Hood
EPA Probe Configuration:	Method 5

(See SOP AM-CAL-006 for Instructions)

A **B**

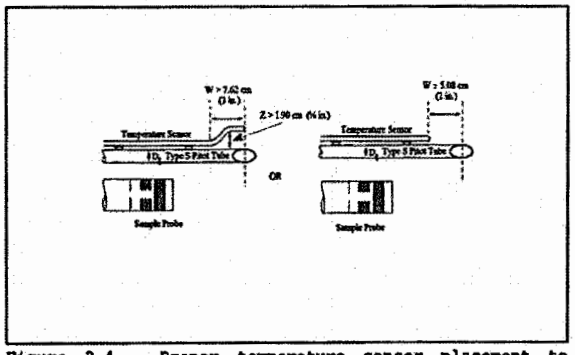

Figure 2-4. Proper temperature sensor placement to prevent interference; D_t between 0.48 and 0.95 cm (3/16 and 3/8 in).

Configuration (A, B or NA): NA

Tube diameter (D_t), Inch: _____

Distance "W", Inch: _____

Distance "Z" Inch: _____

Correct configuration? NA

NA - Temperature sensor not mounted on pitot tube
Configuration A - W >3 inches, Z> 0.75 inches
Configuration B - W at least 2 inches

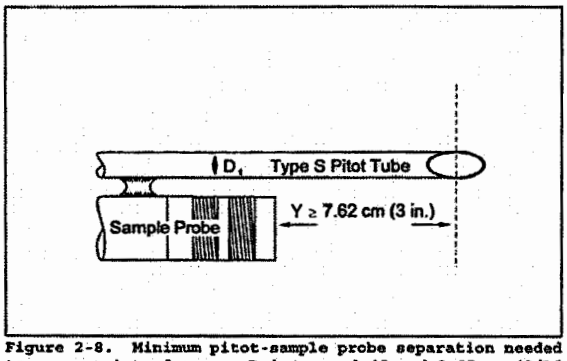

Figure 2-8. Minimum pitot-sample probe separation needed to prevent interference; D_t between 0.48 and 0.95 cm (3/16 and 3/8 in).

Distance "Y": 3 (inch)

Correct configuration? Yes

Y must be at least 3 inches

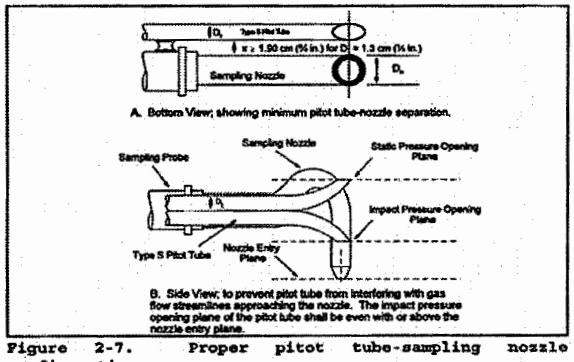

Figure 2-7. Proper pitot tube-sampling nozzle configuration.

Distance "X": 0.75 (inch)
Must be ≥ 0.75 inches

Correct configuration? Yes

© 2014 TRC Environmental Corp.

Nozzle Calibration

Analyst:	Gavin Lewis
Date:	5/10/16
Project Number:	253282
Client:	Elkhart Brass
Test Location:	Tap Hood

(See SOP AM-CAL-007 for Instructions)

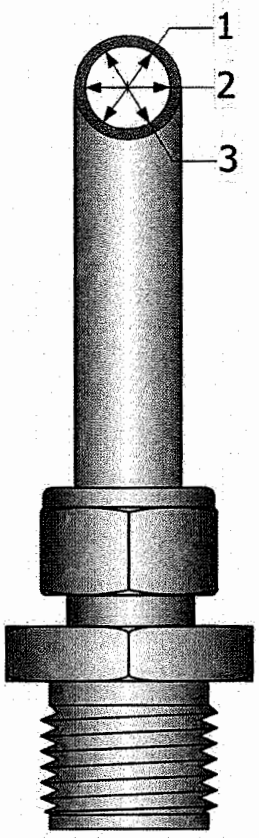

Nozzle ID No.: N/A

Maximum - Minimum ≤ 0.004 inches

Pre Test

0.268	**1**
0.268	**2**
0.268	**3**

PASS - measurements meet specifications.

Average
0.268

© 2014 TRC Environmental Corp.

AM-EMT-52 Rev. 11
Revised 11/12/14

Analyst:	Gavin Lewis
Date:	5/10/2016
Project Number:	253282
Client:	Elkhart Brass
Test Location:	Tap Hood

Calibration Tools: Include all of the tools from the field calibration kit that you will be using on this project. (See SOP AM-CAL-025 for instructions on re-verification)

Item	ID#	S/N	Calibration Due Date
Digital Caliper	DC011-02		1/19/2017
Thermometer	TH011	122436575	1/19/2017
Barometer	BA009	111940972	7/20/2016
Calibration Weight, 100 g	W100-011	2376	1/19/2017
Calibration Weight A, 500 g	W500-011A	9282	1/19/2017
Calibration Weight B, 500 g	W500-011B	9288	1/19/2017
Type A Angle Finder	AF011		1/19/2017
Plastic/Magnetic Torpedo Level	TL011		

© 2014 TRC Environmental Corp.

Pre Test Thermocouple Calibration Checks

Analyst:	Gavin Lewis
Date:	5/10/16
Project Number:	253282
Client:	Elkhart Brass
Test Location:	Tap Hood

(See SOP AM-CAL-005 for instructions)

Console/Meter Box ID #	E57
Probe ID#	872
Test Location/Measurement Point Info:	Stack
NIST Thermometer ID #	TH011

Procedure 1: Calibrate thermocouple against a reference thermometer.

After each test run series, check the accuracy (and, hence, the calibration) of each thermocouple system at ambient temperature, or any other temperature, within the range specified by the manufacturer, using a reference thermometer.

Procedure 2: Check the response of the thermocouple to a change in temperature.

Check the "continuity" of the thermocouple by subjecting it to a change in temperature (e.g., removing it from the stack or touching an ice cube). This step will also check for loose connections and reversed connections.

Measurement	T/C Temp, °F	NIST Thermometer Temp, °F	Difference, °F (± 2)	Continuity Check	Overall Status
Stack	57	57.8	0.8	Pass	Pass
Filter	60	58.5	1.5	Pass	Pass
Impinger Exit	54	55.6	1.6	Pass	Pass
Meter in	59	59.3	0.3	Pass	Pass
Meter Out	59	59.3	0.3	Pass	Pass
Probe	61	59.9	1.1	Pass	Pass

© 2014 TRC Environmental Corp.

Post Test Thermocouple Calibration Checks

Analyst:	Gavin Lewis
Date:	5/12/16
Project Number:	253282
Client:	Elkhart Brass
Test Location:	Tap Hood

(See SOP AM-CAL-005 for instructions)

Console/Meter Box ID #	E57
Probe ID#	872
Test Location/Measurement Point Info:	Stack
NIST Thermometer ID #	TH011

Procedure 1: Calibrate thermocouple against a reference thermometer.

After each test run series, check the accuracy (and, hence, the calibration) of each thermocouple system at ambient temperature, or any other temperature, within the range specified by the manufacturer, using a reference thermometer.

Procedure 2: Check the response of the thermocouple to a change in temperature.

Check the "continuity" of the thermocouple by subjecting it to a change in temperature (e.g., removing it from the stack or touching an ice cube). This step will also check for loose connections and reversed connections.

Measurement	T/C Temp, °F	NIST Thermometer Temp, °F	Difference, °F (± 2)	Continuity Check	Overall Status
Stack	68	69.3	1.3	Pass	Pass
Filter	69	69.3	0.3	Pass	Pass
Impinger Exit	70	69.3	0.7	Pass	Pass
Meter in	70	69.5	0.5	Pass	Pass
Meter Out	70	69.5	0.5	Pass	Pass
Probe	70	69.2	0.8	Pass	Pass

© 2014 TRC Environmental Corp.

PRE TEST TYPE S PITOT TUBE INSPECTION

(See SOP AM-CAL-006 for Instructions)

Pitot Tube No. : 872 Date: 5/10/2016 Analyst: Gavin Lewis

Project Number: 253282 Client: Elkhart Brass Test Location: Tap Hood

Digital Caliper ID: DC011-02 Level ID: TL011 Angle Finder ID: AF011

Pitot tube assembly level? X yes ____ no

Pitot tube openings damaged? ____ yes (explain below) X no

α_1 = 0 ° (<10°), α_2 = 0 ° (<10°) z = A tan γ = 0.025 (in.); (<0.125 in.)

β_1 = 0 ° (<5°), β_2 = 2 ° (<5°) w = A tan θ = 0.012 (in.); (<0.03125 in.)

γ = 2 °, θ = 1 °, A = 0.716 (in.) P_A = 0.358 (in.), P_B = 0.358 (in.), D_t* = 0.250 (in.)

Comments: ____

Note: *D_t = Recommended nominal pitot tube diameter of 0.250 (in.) or 0.375 (in.).

Calibration required? ____ yes X no

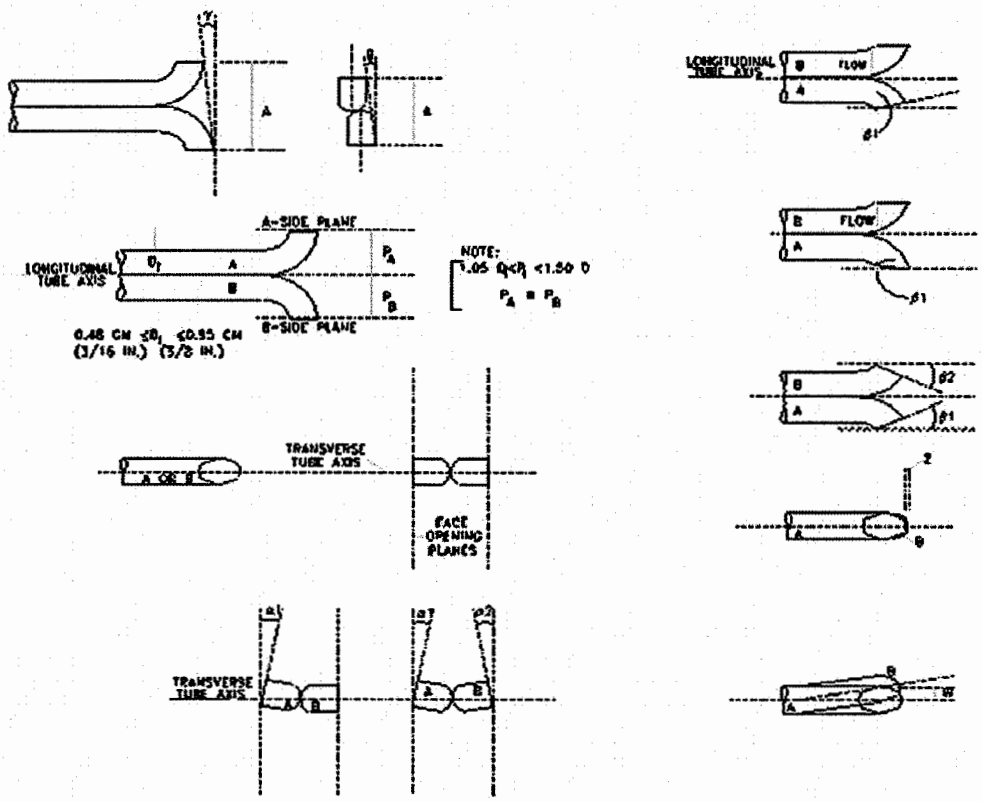

© 2014 TRC Environmental Corp.

AM-EMT-52 Rev. 11
Revised 11/12/14

POST TEST TYPE S PITOT TUBE INSPECTION

(See SOP AM-CAL-006 for Instructions)

Pitot Tube No. : 872 Date: 5/12/2016 Analyst: Gavin Lewis

Project Number: 253282 Client: Elkhart Brass Test Location: Tap Hood

Digital Caliper ID: DC011-02 Level ID: TL011 Angle Finder ID: AF011

Pitot tube assembly level? X yes ____ no

Pitot tube openings damaged? ____ yes (explain below) X no

α_1 = 0 ° (<10°), α_2 = 0 ° (<10°) z = A tan γ = 0.025 (in.); (<0.125 in.)

β_1 = 0 ° (<5°), β_2 = 2 ° (<5°) w = A tan θ = 0.000 (in.); (<0.03125 in.)

γ = 2 °, θ = 0 °, A = 0.716 (in.) P_A = 0.358 (in.), P_B = 0.358 (in.), D_t* = 0.250 (in.)

Comments: ____

Note: *D_t = Recommended nominal pitot tube diameter of 0.250 (in.) or 0.375 (in.).

Calibration required? ____ yes X no

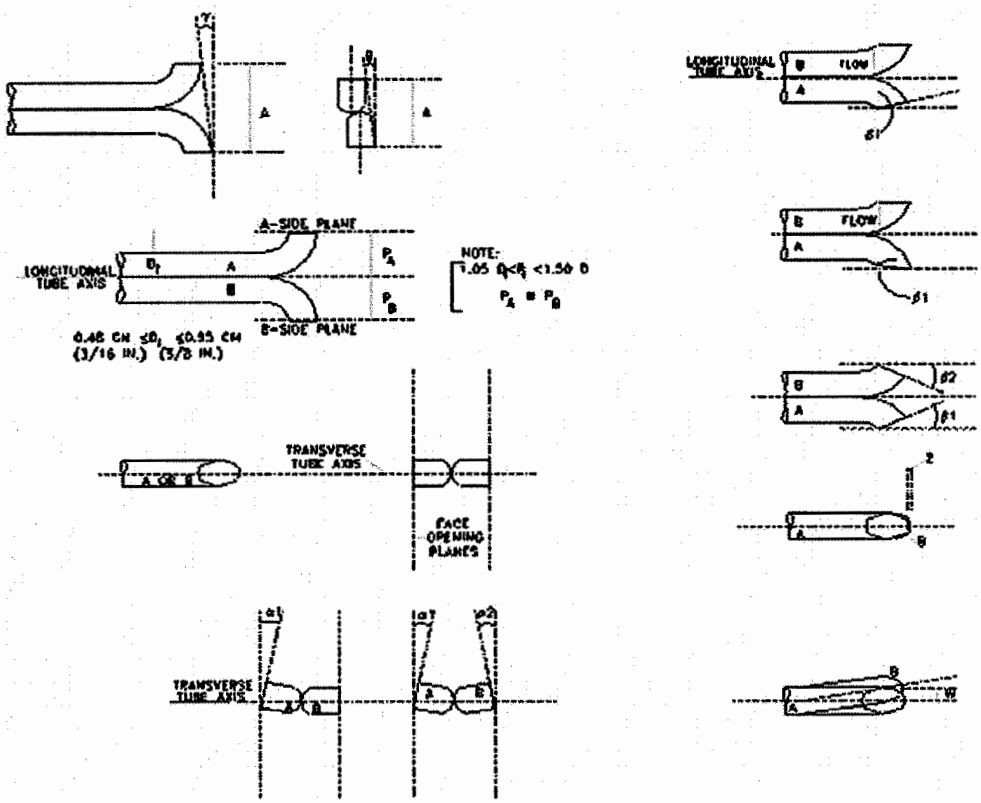

© 2014 TRC Environmental Corp.

AM-EMT-52 Rev. 11
Revised 11/12/14

PITOT TUBE ASSEMBLY INSPECTION

Analyst:	Gavin Lewis
Date:	5/10/16
Project Number:	253282
Test Location:	Tap Hood
EPA Probe Configuration:	Method 5

(See SOP AM-CAL-006 for Instructions)

A **B**

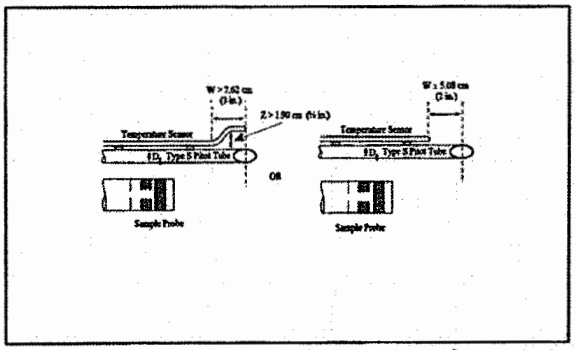

Figure 2-4. Proper temperature sensor placement to prevent interference; D_t between 0.48 and 0.95 cm (3/16 and 3/8 in).

Configuration (A, B or NA): NA

Tube diameter (D_t), Inch: 0.25

Distance "W", Inch:

Distance "Z" Inch:

Correct configuration? NA

NA - Temperature sensor not mounted on pitot tube
Configuration A - W >3 inches, Z> 0.75 inches
Configuration B - W at least 2 inches

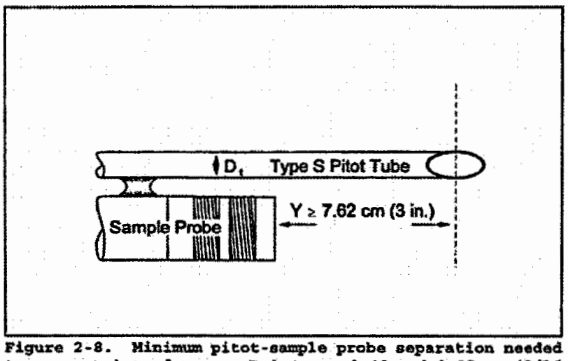

Figure 2-8. Minimum pitot-sample probe separation needed to prevent interference; D_t between 0.48 and 0.95 cm (3/16 and 3/8 in).

Distance "Y": 3 (inch)

Correct configuration? Yes

Y must be at least 3 inches

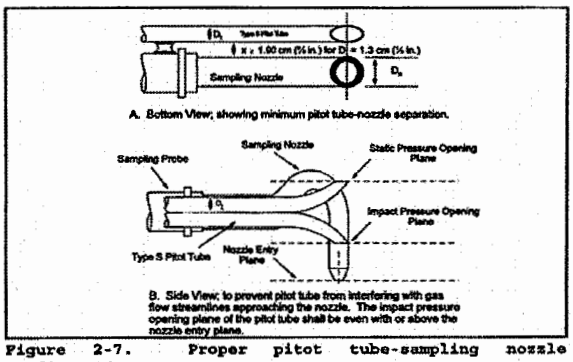

Figure 2-7. Proper pitot tube-sampling nozzle configuration.

Distance "X": 0.75 (inch)

Must be ≥ 0.75 inches

Correct configuration? Yes

© 2014 TRC Environmental Corp.

Nozzle Calibration

Analyst:	Gavin Lewis
Date:	5/10/16
Project Number:	253282
Client:	Elkhart Brass
Test Location:	Tap Hood

(See SOP AM-CAL-007 for Instructions)

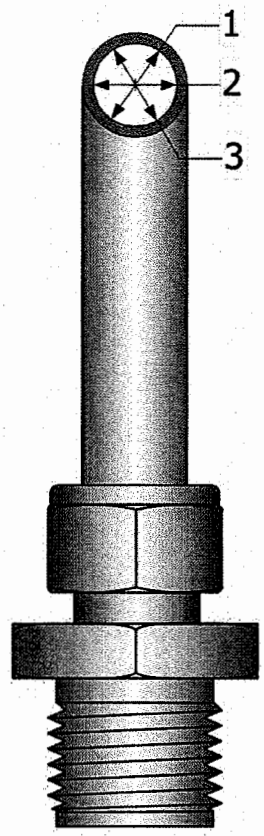

Nozzle ID No.: N/A

Maximum - Minimum ≤ 0.004 inches

Pre Test

0.272	**1**
0.272	**2**
0.272	**3**

PASS - measurements meet specifications.

Average
0.272

© 2014 TRC Environmental Corp.

AM-EMT-52 Rev. 11
Revised 11/12/14

TRC

Isokinetic Test Support Data

Company:	Elkhart Brass	Project#:	253282
Plant:	Elkhart, IN	Test Method(s):	5
Unit ID:	Melt 1	Test Run #:	1
Location:	Stack	Test Date(s):	5/11/2016

Console Operator:	G. Rock	Unit Operating Mode:	Normal
Console ID:	E21	Duct Shape/Area:	Round / 4.24 ft^2
Meter Y:	0.992	Fuel Type:	
Orifice $\Delta H_{@i}$:	1.862	F_d Factor:	dscf/MMBtu
Pitot Tube ID:	776	F_c Factor:	scf/MMBtu
Cal. coefficient (C_p):	0.84	Fuel heat content:	Btu /
Probe Liner Material:	Glass	Process/fuel flow rate:	/ hr
Nozzle Material:	Inconel	Soot blown?	N/A
Nozzle Diameter (D_n):	0.296 in	Duration:	N/A min

Sample collection time

Total # of points:	24	
Target Sample time/point:	5.0	min
Target run duration:	120.0	min
Barometric Pressure (P_{bar}):	29.17	in Hg
Stack Static Pressure (P_g):	-0.18	in H2O
Stack Pressure (P_s):	29.16	in Hg

Imp #	Contents	Tare wt. (grams)	Final wt: (grams)
1	H_20	736.9	743.1
2	H_20	733.3	735.3
3	Empty	593.3	595.1
4	Silica Gel	785.0	799.7

Net grams (M_{H20}): 24.7

Leak Checks

Pre-Test Train Leak Check:	0.004	CFM @ 14 "Hg
Pre-Test Pitot Leak Check:	Pass	(Pass or Fail)
Post-Test Train Leak Rate:	0.003	CFM @ 7 "Hg
Post-Test Pitot Leak Check:	Pass	(Pass or Fail)
Pump/Orifice Leak Check:	Pass	(Pass or Fail)
Filter/Thimble ID:	9364	
Tare Weight:	0.9556	grams

Fixed Gas Analysis:

CO_2:	0.0	%vol
O_2:	20.9	%vol
N_2:	79.1	%vol

Description of Filter and Front Half Rinses:

Description of Impinger liquid:

General Comments:

© 2016 TRC Environmental Corp.

AM-EMT-15 Rev. 35.4
1/6/2016

TRC

Company:	Elkhart Brass	Job #:	253282	Test Date:	5-11-2016
Plant:	Elkhart, Indiana	Methods:	5	X-Factor:	8.249
Unit:	furnace 1	Run #:	2	Minutes/pt:	5
Location:	stack	Traverse Sheet:	1 of 1		

Port & Point ID	Clock Time	Meter Volume ft³	ΔP in. H_2O	Stack °F	Dry Gas Meter Inlet °F	Dry Gas Meter Outlet °F	Orifice ΔH in. H_2O	Probe Liner °F	Filter Outlet °F	Impinger Train Outlet °F	Impinger Train CPM Filter °F	Pump Vacuum in. Hg
								This data not entered in Excel				
1-1	1130	428.728	.18	76	81	82	1.5	249	239	64		2
2	1135	432.12	.19	78	83	81	1.6	246	240	63		2
3	1140	435.6	.18	77	85	81	1.5	246	240	63		2
4	1145	439.0	.16	78	85	81	1.4	245	240	63		2
5	1150	442.3	.15	78	85	81	1.3	246	241	62		2
6	1155	445.45	.14	79	85	81	1.2	245	241	63		2
7	1200	448.5	.18	80	87	82	1.6	246	240	63		2
8	1205	452	.2	84	86	82	1.7	247	240	64		2
9	1210	455.75	.22	80	86	82	1.9	247	241	64		2
10	1215	459.35	.22	81	88	82	1.9	246	241	63		2
11	1220	463.1	.23	80	88	82	2.0	247	241	65		2
12	1225	467.0	.18	82	88	82	1.6	247	240	66		2
	1230	470.454										
2-1	1240	471.110	.18	84	85	84	1.6	248	241	68		2
2	1245	474.6	.18	81	89	84	1.6	247	241	66		2
3	1250	478.1	.18	85	89	84	1.6	246	240	65		2
4	1255	481.5	.17	82	90	86	1.5	246	240	64		2
5	1300	484.9	.16	86	91	86	1.3	246	241	63		2
6	1305	488.14	.14	83	91	86	1.2	247	240	63		2
7	1310	491.2	.15	86	91	86	1.3	247	239	63		2
8	1315	494.3	.17	83	92	87	1.5	247	240	63		2
9	1320	497.7	.21	85	92	87	1.8	247	241	63		2
10	1325	501.3	.23	82	92	87	2	247	240	63		2
11	1330	505.25	.23	82	92	86	2	247	240	63		2
12	1335	509.15	.21	82	92	86	1.8	246	240	63		2
	1340	512.867										

Comments/notes:

© 2016 TRC Environmental Corp.

TRC

Isokinetic Test Support Data

Company:	Elkhart Brass	Project#:	253282
Plant:	Elkhart, IN	Test Method(s):	5
Unit ID:	Melt 1	Test Run #:	2
Location:	Stack	Test Date(s):	5/11/2016

Console Operator:	G. Rock	Unit Operating Mode:	Normal
Console ID:	E21	Duct Shape/Area:	Round / 4.24 ft^2
Meter Y:	0.992	Fuel Type:	
Orifice $\Delta H_{@i}$:	1.862	F_d Factor:	dscf/MMBtu
Pitot Tube ID:	776	F_c Factor:	scf/MMBtu
Cal. coefficient (C_p):	0.84	Fuel heat content:	Btu /
Probe Liner Material:	Glass	Process/fuel flow rate:	/ hr
Nozzle Material:	Inconel	Soot blown?	N/A
Nozzle Diameter (D_n):	0.296 in	Duration:	N/A min

Sample collection time		
Total # of points:	24	
Target Sample time/point:	5.0	min
Target run duration:	120.0	min
Barometric Pressure (P_{bar}):	29.20	in Hg
Stack Static Pressure (P_g):	-0.80	in H2O
Stack Pressure (P_s):	29.14	in Hg

Imp #	Contents	Tare wt. (grams)	Final wt: (grams)
1	H20	743.1	755.1
2	H20	735.3	738.0
3	Empty	595.1	596.8
4	Silica Gel	799.7	811.6

Net grams (M_{H20}): 28.3

Leak Checks

Pre-Test Train Leak Check:	0.004	CFM @ 7	"Hg
Pre-Test Pitot Leak Check:	Pass	(Pass or Fail)	
Post-Test Train Leak Rate:	0.005	CFM @ 5	"Hg
Post-Test Pitot Leak Check:	Pass	(Pass or Fail)	
Pump/Orifice Leak Check:	Pass	(Pass or Fail)	
Filter/Thimble ID:	9468		
Tare Weight:	0.6487	grams	

Fixed Gas Analysis:

CO_2:	0.0	%vol
O_2:	20.9	%vol
N_2:	79.1	%vol

Description of Filter and Front Half Rinses:

Description of Impinger liquid:

General Comments:

© 2016 TRC Environmental Corp.

AM-EMT-15 Rev. 35.4
1/6/2016

TRC

Company: Elkhart Brass
Plant: Elkhart, Indiana
Unit: Furnace 1
Location: Stack

Job #: 253282
Methods: 5
Run #: 3
Traverse Sheet: 1 of 1

Test Date: 5-11-2016
X-Factor: 8.249
Minutes/pt: 5

This data not entered in Excel

Port & Point ID	Clock Time	Meter Volume ft³	ΔP in. H_2O	Stack °F	Dry Gas Meter Inlet °F	Dry Gas Meter Outlet °F	Orifice ΔH in. H_2O	Probe Liner °F	Filter Outlet °F	Impinger Train Outlet °F	Impinger Train CPM Filter °F	Pump Vacuum in. Hg
1-1	1440	513.086	.17	82	88	88	1.5	248	239	65		2
2	1445	516.5	.17	83	88	87	1.5	247	239	63		2
3	1450	519.85	.18	81	90	87	1.5	247	239	62		2
4	1455	523.25	.17	85	91	87	1.5	246	240	62		2
5	1500	526.66	.16	82	91	87	1.4	245	241	62		2
6	1505	529.96	.14	80	92	88	1.2	246	240	62		2
7	1510	533	.15	79	92	88	1.3	247	240	63		2
8	1515	536.11	.18	79	92	88	1.6	247	239	64		2
9	1520	539.6	.21	80	92	88	1.9	247	240	64		2
10	1525	543.4	.23	79	93	88	2	246	240	63		2
11	1530	547.32	.22	86	93	88	1.9	246	240	63		2
12	1535	551.11	.21	84	93	88	1.8	247	240	63		2
	1540	554.836										
2-1	1555	555.096	.17	84	89	88	1.5	248	239	67		2
2	1600	558.5	.18	84	91	88	1.6	246	239	63		2
3	1605	561.95	.16	84	91	88	1.4	246	239	63		2
4	1610	565.22	.17	85	92	88	1.5	246	239	63		2
5	1615	568.66	.14	84	92	88	1.2	246	239	64		2
6	1620	571.7	.13	87	92	88	1.1	246	239	63		2
7	1625	574.53	.17	89	92	88	1.4	245	239	63		2
8	1630	577.83	.2	88	92	88	1.7	246	239	63		2
9	1635	581.43	.22	88	92	88	1.8	246	239	64		2
10	1640	585.14	.22	91	92	88	1.8	245	239	64		2
11	1645	588.82	.19	86	92	88	1.6	245	230	64		2
12	1650	592.35	.17	88	92	88	1.4	240	227	65		2
	1655	595.618										

Comments/notes:

© 2015 TRC Environmental Corp.

TRC

Isokinetic Test Support Data

Company:	Elkhart Brass	Project#:	253282
Plant:	Elkhart, IN	Test Method(s):	5
Unit ID:	Melt 1	Test Run #:	3
Location:	Stack	Test Date(s):	5/11/2016

Console Operator:	G. Rock	Unit Operating Mode:	Normal
Console ID:	E21	Duct Shape/Area:	Round / 4.24 ft^2
Meter Y:	0.992	Fuel Type:	
Orifice $\Delta H_{@i}$:	1.862	F_d Factor:	dscf/MMBtu
Pitot Tube ID:	776	F_c Factor:	scf/MMBtu
Cal. coefficient (C_p):	0.84	Fuel heat content:	Btu /
Probe Liner Material:	Glass	Process/fuel flow rate:	/ hr
Nozzle Material:	Inconel	Soot blown?	N/A
Nozzle Diameter (D_n):	0.296 in	Duration:	N/A min

Sample collection time		
Total # of points:	24	
Target Sample time/point:	5.0	min
Target run duration:	120.0	min
Barometric Pressure (P_{bar}):	29.20	in Hg
Stack Static Pressure (P_g):	-0.80	in H2O
Stack Pressure (P_s):	29.14	in Hg

Imp #	Contents	Tare wt. (grams)	Final wt: (grams)
1	H20	755.1	767.8
2	H20	738.0	742.3
3	Empty	596.8	599.4
4	Silica Gel	807.5	821.1
		Net grams (M_{H20}):	33.2

Leak Checks		
Pre-Test Train Leak Check:	0.001	CFM @ 5 "Hg
Pre-Test Pitot Leak Check:	Pass	(Pass or Fail)
Post-Test Train Leak Rate:	0.002	CFM @ 5 "Hg
Post-Test Pitot Leak Check:	Pass	(Pass or Fail)
Pump/Orifice Leak Check:	Pass	(Pass or Fail)
Filter/Thimble ID:	9470	
Tare Weight:	0.6566	grams

Fixed Gas Analysis:

CO_2:	0.0	%vol
O_2:	20.9	%vol
N_2:	79.1	%vol

Description of Filter and Front Half Rinses:

0

Description of Impinger liquid:

General Comments:

© 2016 TRC Environmental Corp.

TRC

Company:	Elkhart Briggs	Job #:	253282	Test Date:	5-11-2016
Plant:	Elkhart, Indiana	Methods:	5	X-Factor:	8.249
Unit:	Furnace 1	Run #:	1	Minutes/pt:	5
Location:	Stack	Traverse Sheet:	1 of 1		

Port & Point ID	Clock Time	Meter Volume ft³	ΔP in. H_2O	Stack °F	Dry Gas Meter Inlet °F	Dry Gas Meter Outlet °F	Orifice ΔH in. H_2O	Probe Liner °F	Filter Outlet °F	Impinger Train Outlet °F	Impinger Train CPM Filter °F	Pump Vacuum in. Hg
								This data not entered in Excel				
1-1	720	348.264	.17	69	61	60	1.4	248	241	56		2
2	725	351.5	.17	69	62	61	1.4	247	240	56		2
3	730	354.7	.18	69	62	61	1.5	245	240	55		2
4	735	358.0	.17	69	64	61	1.4	245	241	56		2
5	740	361.2	.16	73	66	61	1.3	246	241	56		2
6	745	364.3	.14	69	68	62	1.2	246	242	56		2
7	750	367.25	.15	69	69	62	1.2	246	241	55		2
8	755	370.2	.18	70	69	62	1.5	246	240	55		2
9	800	373.53	.21	69	70	63	1.7	246	242	56		2
10	805	377.1	.23	71	72	64	1.9	245	241	57		2
11	810	380.75	.23	69	73	65	1.9	244	245	57		2
12	815	384.5	.2	74	72	66	1.65	245	245	57		2
	820	388.0										
2-1	930	388.268	.18	71	72	71	1.5	249	241	57		2
2	935	391.6	.18	76	73	71	1.5	246	241	56		2
3	940	394.95	.18	73	75	71	1.5	246	241	56		2
4	945	398.3	.18	72	76	72	1.5	245	240	56		2
5	950	400.6	.15	79	77	72	1.25	246	241	57		2
6	955	403.8	.15	81	78	73	1.25	246	241	58		2
7	1000	406.8	.18	80	78	73	1.5	245	241	58		2
8	1005	410.1	.21	80	78	73	1.8	246	241	58		2
9	1010	413.73	.23	82	80	73	1.9	244	242	58		2
10	1015	417.5	.23	80	80	73	1.9	245	245	60		2
11	1020	421.26	.21	81	80	73	1.7	246	241	60		2
12	1025	424.83	.20	81	80	73	1.7	245	243	60		2
	1030	428.472										

Comments/notes:

© 2016 TRC Environmental Corp.

TRC

Isokinetic Test Support Data

Company:	ELKHART BRASS	Project#:	253282
Plant:	ELKHART, IN	Test Method(s):	M5
Unit ID:	MELT 2	Test Run #:	1
Location:	STACK	Test Date(s):	5-11-16

Console Operator:	BMC	Unit Operating Mode:	NORMAL
Console ID:	E53	Duct Shape/Area:	ROUND / 4.24 ft²
Meter Y:	0.994	Fuel Type:	
Orifice $\Delta H_{@i}$:	1.613	F_d Factor:	dscf/MMBtu
Pitot Tube ID:	347B	F_c Factor:	scf/MMBtu
Cal. coefficient (C_p):	0.840	Fuel heat content:	Btu /
Probe Liner Material:	GLASS	Process/fuel flow rate:	/ hr
Nozzle Material:	~~NICKEL~~ S.S.	Soot blown?	N/A
Nozzle Diameter (D_n):	0.298 in	Duration:	N/A min

Sample collection time

Total # of points: 24

Target Sample time/point: 5 min

Target run duration: 120 min

Barometric Pressure (P_{bar}): 29.17 in Hg

Stack Static Pressure (P_g): -0.18 in H2O

Stack Pressure (P_s): 29.16 in Hg

Imp #	Contents	Tare wt. (grams)	Final wt: (grams)
1	H_2O	777.5	788.7
2	H_2O	747.2	748.2
3	Empty	637.5	639.0
4	Silica Gel	710.5	719.5
		Net grams (M_{H2O}):	22.7

Leak Checks

Pre-Test Train Leak Check: 0.000 CFM @ 13 "Hg

Pre-Test Pitot Leak Check: PASS (Pass or Fail)

Post-Test Train Leak Rate: 0.000 CFM @ 5 "Hg

Post-Test Pitot Leak Check: PASS (Pass or Fail)

Pump/Orifice Leak Check: PASS (Pass or Fail)

Filter/Thimble ID: 9397

Tare Weight: 0.9263 grams

Fixed Gas Analysis:

CO_2: 0 %vol

O_2: 20.9 %vol

N_2: 79.1 %vol

Description of Filter and Front Half Rinses:

Description of Impinger liquid:

General Comments:

© 2016 TRC Environmental Corp.

AM-EMT-15 Rev. 35.4
1/6/2016

TRC

Company:	ELKHART BRASS	Job #:	253282	Test Date:	5-11-16
Plant:	ELKHART, IN	Methods:	M5	X-Factor:	7.345
Unit:	MELT 2	Run #:	1	Minutes/pt:	5
Location:	STACK	Traverse Sheet:	1 of 1		

Port & Point ID	Clock Time	Meter Volume ft³	ΔP in. H_2O	Stack °F	Dry Gas Meter Inlet °F	Dry Gas Meter Outlet °F	Orifice ΔH in. H_2O	This data not entered in Excel: Probe Liner °F	Filter Outlet °F	Impinger Train Outlet °F	Impinger Train CPM Filter °F	Pump Vacuum in. Hg
1-1	7:20	958.015	0.28	69	62	60	2.0	248	255	53	N/A	2
2	7:25	962.26	0.29	69	65	61	2.1	245	254	54		2
3	7:30	966.65	0.30	70	69	61	2.2	250	254	54		2
4	7:35	971.26	0.30	71	73	62	2.2	249	253	53		2
5	7:40	975.87	0.28	69	74	63	2.1	250	254	52		2
6	7:45	980.24	0.24	70	75	64	1.8	251	255	52		2
7	7:50	984.51	0.25	69	76	65	1.8	251	255	51		2
8	7:55	988.62	0.24	70	76	66	1.8	250	255	51		2
9	8:00	992.84	0.22	70	77	67	1.6	250	255	51		2
10	8:05	996.79	0.19	70	78	68	1.4	250	255	50		1.5
11	8:10	1000.66	0.10	69	78	68	0.74	250	255	50		1
12	8:15	1003.67	0.10	60	77	69	0.75	251	255	51		1
	8:20	1006.361										
2-1	9:30	1006.713	0.33	69	74	73	2.4	254	255	54		2
2	9:35	1011.49	0.33	73	76	73	2.4	251	255	51		2
3	9:40	1016.08	0.34	70	81	74	2.5	254	255	52		2
4	9:45	1021.05	0.34	72	84	74	2.5	249	255	51		2
5	9:50	1026.15	0.30	72	86	75	2.2	249	255	52		2
6	9:55	1030.88	0.28	74	86	76	2.1	249	256	51		2
7	10:00	1035.37	0.22	78	86	77	1.6	249	255	52		1.5
8	10:05	1039.49	0.20	77	86	77	1.5	251	256	52		1.5
9	10:10	1043.43	0.17	77	86	77	1.3	252	256	52		1.5
10	10:15	1047.13	0.12	77	86	78	0.89	252	256	52		1
11	10:20	1050.25	0.12	79	85	78	0.89	253	256	52		1
12	10:25	1053.32	0.09	74	85	79		254	256	52		1
	10:30	1056.082										

Comments/notes:

© 2016 TRC Environmental Corp.

TRC

Isokinetic Test Support Data

Company:	ELKHART BRASS	Project#:	253282
Plant:	ELKHART, IN	Test Method(s):	M5
Unit ID:	MELT 2	Test Run #:	2
Location:	STACK	Test Date(s):	5-11-16

Console Operator:	BMC	Unit Operating Mode:	NORMAL
Console ID:	E53	Duct Shape/Area:	ROUND / 4.24 ft²
Meter Y:	0.994	Fuel Type:	
Orifice $\Delta H_{@i}$:	1.613	F_d Factor:	dscf/MMBtu
Pitot Tube ID:	347B	F_c Factor:	scf/MMBtu
Cal. coefficient (C_p):	0.840	Fuel heat content:	Btu /
Probe Liner Material:	GLASS	Process/fuel flow rate:	/ hr
Nozzle Material:	~~NICKEL~~ S.S.	Soot blown?	N/A
Nozzle Diameter (D_n):	0.298 in	Duration:	N/A min

Sample collection time

Total # of points: 24

Target Sample time/point: 5 min

Target run duration: 120 min

Barometric Pressure (P_{bar}): 29.20 in Hg

Stack Static Pressure (P_g): -0.18 in H2O

Stack Pressure (P_s): 29.19 in Hg

Imp #	Contents	Tare wt. (grams)	Final wt: (grams)
1	H_2O	788.7	804.3
2	H_2O	748.2	750.9
3	Empty	639.0	640.3
4	Silica Gel	719.5	723.0

Net grams (M_{H2O}): 23.1

Leak Checks

Pre-Test Train Leak Check: 0.000 CFM @ 13 "Hg

Pre-Test Pitot Leak Check: PASS (Pass or Fail)

Post-Test Train Leak Rate: 0.000 CFM @ 5 "Hg

Post-Test Pitot Leak Check: PASS (Pass or Fail)

Pump/Orifice Leak Check: PASS (Pass or Fail)

Filter/Thimble ID: 9400

Tare Weight: 0.9154 grams

Fixed Gas Analysis:

CO_2: 0 %vol

O_2: 20.9 %vol

N_2: 79.1 %vol

Description of Filter and Front Half Rinses:

Description of Impinger liquid:

General Comments:

© 2016 TRC Environmental Corp.

AM-EMT-15 Rev. 35.4
1/6/2016

TRC

Company:	ELKHART BRASS	Job #:	253282	Test Date:	5-11-16
Plant:	ELKHART, IN	Methods:	M5	X-Factor:	7.345
Unit:	MELT 2	Run #:	2	Minutes/pt:	5
Location:	STACK	Traverse Sheet:	1 of 1		

Port & Point ID	Clock Time	Meter Volume ft³	ΔP in. H_2O	Stack °F	Dry Gas Meter Inlet °F	Dry Gas Meter Outlet °F	Orifice ΔH in. H_2O	Probe Liner °F	Filter Outlet °F	Impinger Train Outlet °F	Impinger Train CPM Filter °F	Pump Vacuum in. Hg
								This data not entered in Excel				
1-1	11:30	56.625	0.35	74	83	83	2.6	254	254	53	N/A	2
2	11:35	61.64	0.35	76	86	83	2.6	250	255	52		2
3	11:40	66.66	0.36	76	89	83	2.7	249	254	51		2.5
4	11:45	71.83	0.35	77	92	84	2.6	250	255	51		2.5
5	11:50	76.88	0.31	80	93	84	2.3	250	256	51		2
6	11:55	81.59	0.28	79	92	84	2.1	252	255	52		2
7	12:00	86.11	0.22	80	93	85	1.6	251	256	52		1.5
8	12:05	90.19	0.20	80	93	86	1.5	252	255	52		1.5
9	12:10	94.13	0.19	79	92	86	1.4	252	256	52		1.5
10	12:15	97.98	0.16	78	92	86	1.2	253	255	52		1.5
11	12:20	101.54	0.14	80	92	86	1.1	254	256	53		1.5
12	12:25	104.88	0.08	80	92	87	0.6	253	257	54		1
	12:30	107.541										
2-1	12:40	107.915	0.31	86	88	87	2.3	251	255	55		2
2	12:45	112.72	0.32	80	91	87	2.4	251	255	55		2.5
3	12:50	117.62	0.33	81	95	87	2.5	251	256	53		2.5
4	12:55	122.63	0.33	83	96	88	2.5	250	256	53		2.5
5	13:00	126.64	0.31	82	97	89	2.3	251	256	53		2
6	13:05	132.51	0.30	82	97	89	2.3	251	256	54		2
7	13:10	137.31	0.26	83	98	90	2.0	252	255	52		2
8	13:15	141.79	0.25	82	98	91	1.9	251	256	53		2
9	13:20	146.22	0.23	83	98	91	1.7	251	257	53		2
10	13:25	150.33	0.22	83	98	91	1.7	251	256	53		2
11	13:30	154.49	0.20	84	98	92	1.5	252	255	54		2
12	13:35	158.51	0.20	80	98	92	1.5	252	256	54		2
	13:40	162.459										

Comments/notes:

© 2016 TRC Environmental Corp.

TRC

Isokinetic Test Support Data

Company:	ELKHART BRASS	Project#:	253282
Plant:	ELKHART, IN	Test Method(s):	M5
Unit ID:	MELT 2	Test Run #:	3
Location:	STACK	Test Date(s):	5-11-16

Console Operator:	BMC	Unit Operating Mode:	NORMAL
Console ID:	E53	Duct Shape/Area:	ROUND / 4.24 ft²
Meter Y:	0.994	Fuel Type:	
Orifice $\Delta H_{@i}$:	1.613	F_d Factor:	dscf/MMBtu
Pitot Tube ID:	347B	F_c Factor:	scf/MMBtu
Cal. coefficient (C_p):	0.840	Fuel heat content:	Btu /
Probe Liner Material:	GLASS	Process/fuel flow rate:	/ hr
Nozzle Material:	~~NICKEL~~ S.S.	Soot blown?	N/A
Nozzle Diameter (D_n):	0.298 in	Duration:	N/A min

Sample collection time

Total # of points: 24

Target Sample time/point: 5 min

Target run duration: 120 min

Barometric Pressure (P_{bar}): 29.20 in Hg

Stack Static Pressure (P_g): -0.18 in H2O

Stack Pressure (P_s): 29.19 in Hg

Imp #	Contents	Tare wt. (grams)	Final wt: (grams)
1	H_2O	804.3	822.4
2	H_2O	750.9	759.4
3	Empty	640.3	640.5
4	Silica Gel	723.0	725.4
		Net grams (M_{H2O}):	24.2

Leak Checks

Pre-Test Train Leak Check: 0.000 CFM @ 13 "Hg

Pre-Test Pitot Leak Check: PASS (Pass or Fail)

Post-Test Train Leak Rate: 0.000 CFM @ 5 "Hg

Post-Test Pitot Leak Check: PASS (Pass or Fail)

Pump/Orifice Leak Check: PASS (Pass or Fail)

Filter/Thimble ID: 9471

Tare Weight: 0.6527 grams

Fixed Gas Analysis:

CO_2: 0 %vol

O_2: 20.9 %vol

N_2: 79.1 %vol

Description of Filter and Front Half Rinses:

Description of Impinger liquid:

General Comments:

© 2016 TRC Environmental Corp.

AM-EMT-15 Rev. 35.4
1/6/2016

TRC

Company:	ELKHART BRASS	Job #:	253282	Test Date:	5-11-16
Plant:	ELKHART, IN	Methods:	M5	X-Factor:	7.345
Unit:	MELT 2	Run #:	3	Minutes/pt:	5
Location:	STACK	Traverse Sheet:	1 of 1		

This data not entered in Excel

Port & Point ID	Clock Time	Meter Volume ft^3	ΔP in. H_2O	Stack °F	Dry Gas Meter Inlet °F	Dry Gas Meter Outlet °F	Orifice ΔH in. H_2O	Probe Liner °F	Filter Outlet °F	Impinger Train Outlet °F	Impinger Train CPM Filter °F	Pump Vacuum in. Hg
1-1	14:40	162.915	0.31	81	89	89	2.3	256	256	57	N/A	1.5
2	14:45	167.72	0.34	82	92	89	2.5	252	254	56		1.5
3	14:50	172.67	0.33	82	95	90	2.5	250	256	52		1.5
4	14:55	177.72	0.31	82	97	90	2.3	251	255	51		1.5
5	15:00	182.57	0.29	81	98	90	2.2	250	255	52		1.5
6	15:05	187.14	0.24	80	98	90	1.8	250	254	51		1
7	15:10	191.46	0.26	81	98	91	2.0	252	256	51		1
8	15:15	195.91	0.26	83	98	91	2.0	252	256	52		1
9	15:20	200.37	0.22	81	98	91	1.7	251	256	51		1
10	15:25	204.49	0.21	84	97	92	1.6	251	256	52		1
11	15:30	208.57	0.19	81	97	92	1.4	251	256	51		1
12	15:35	212.41	0.18	80	97	92	1.4	252	256	52		1
	15:40	216.212										
2-1	15:55	216.516	0.36	82	93	91	2.7	254	255	50		2
2	16:00	221.71	0.36	83	93	91	2.7	251	255	49		2
3	16:05	226.87	0.35	82	96	91	2.6	250	255	49		2
4	16:10	231.98	0.35	85	97	91	2.6	251	256	49		2
5	16:15	237.06	0.30	84	98	91	2.3	250	255	49		1.5
6	16:20	241.86	0.29	83	97	91	2.2	251	255	50		1.5
7	16:25	246.58	0.22	81	98	91	1.7	251	255	50		1
8	16:30	250.74	0.20	81	97	91	1.5	251	255	51		1
9	16:35	254.73	0.18	80	97	91	1.4	253	256	51		1
10	16:40	258.57	0.14	84	98	91	1.1	252	255	51		1
11	16:45	261.95	0.11	83	96	92	0.82	253	256	53		1
12	16:50	264.89	0.10	83	96	91	0.75	254	256	54		1
	16:55	267.761										

Comments/notes:

© 2016 TRC Environmental Corp.

AM-EMT-15 Rev. 35.4
1/6/2016

TRC

Isokinetic Test Support Data

Company:	Elkhart Brass	Project#:	253282
Plant:	Elkhart, IN	Test Method(s):	5
Unit ID:	Top Hood	Test Run #:	1
Location:	Stack	Test Date(s):	5/11/16

Console Operator:	Cameron Dillion	Unit Operating Mode:	Normal
Console ID:	E19	Duct Shape/Area:	Round / 4.91 ft²
Meter Y:	.991	Fuel Type:	
Orifice $\Delta H_{@i}$:	1.85	F_d Factor:	dscf/MMBtu
Pitot Tube ID:	801	F_c Factor:	scf/MMBtu
Cal. coefficient (C_p):	.84	Fuel heat content:	Btu /
Probe Liner Material:	Glass	Process/fuel flow rate:	/ hr
Nozzle Material:	Stainless Steel	Soot blown?	N/A
Nozzle Diameter (D_n):	.268 in	Duration:	N/A min

Sample collection time

Total # of points:	24	
Target Sample time/point:	5.0	min
Target run duration:	120.0	min
Barometric Pressure (P_{bar}):	29.17	in Hg
Stack Static Pressure (P_g):	-0.15	in H2O
Stack Pressure (P_s):	29.16	in Hg

Imp #	Contents	Tare wt. (grams)	Final wt: (grams)
1	H_2O	666.7	676.8
2	H_2O	650.3	650.8
3	Empty	588.0	589.4
4	Silica Gel	761.1	776
		Net grams (M_{H2O}):	26.9

Leak Checks

Pre-Test Train Leak Check:	.000 CFM @ 10 "Hg	
Pre-Test Pitot Leak Check:	Pass (Pass or Fail)	
Post-Test Train Leak Rate:	.000 CFM @ 5 "Hg	
Post-Test Pitot Leak Check:	Pass (Pass or Fail)	
Pump/Orifice Leak Check:	Pass (Pass or Fail)	
Filter/Thimble ID:	9365	
Tare Weight:	.9511 grams	

Fixed Gas Analysis:

CO_2:	0	%vol
O_2:	20.9	%vol
N_2:	79.1	%vol

Description of Filter and Front Half Rinses:

Description of Impinger liquid:

General Comments:

© 2016 TRC Environmental Corp.

AM-EMT-15 Rev. 35.4
1/6/2016

TRC

Company:	Elkhart Brass	Job #:	253282	Test Date:	5/11/16
Plant:	Elkhart IN	Methods:	5	X-Factor:	5.508
Unit:	Tap Hood	Run #:	1	Minutes/pt:	5
Location:	Stack	Traverse Sheet:	1 of 1		

Port & Point ID	Clock Time	Meter Volume ft^3	ΔP in. H_2O	Stack °F	Dry Gas Meter Inlet °F	Dry Gas Meter Outlet °F	Orifice ΔH in. H_2O	This data not entered in Excel: Probe Liner °F	Filter Outlet °F	Impinger Train Outlet °F	Impinger Train CPM Filter °F	Pump Vacuum in. Hg
A-1	7:20	393.415	.26	74	61	59	1.4	258	259	54	NA	3
A-2	7:25	396.791	.27	74	64	60	1.5	255	259	53	NA	3
A-3	7:30	400.152	.29	74	67	60	1.6	255	257	54	NA	3
A-4	7:35	403.682	.29	74	70	61	1.6	255	257	55	NA	3
A-5	7:40	407.211	.28	75	72	62	1.5	255	257	55	NA	3
A-6	7:45	410.792	.28	74	73	63	1.5	255	259	55	NA	3
A-7	7:50	414.208	.26	75	74	64	1.4	256	257	55	NA	3
A-8	7:55	417.543	.30	74	75	65	1.6	255	257	55	NA	3
A-9	8:00	421.116	.31	74	76	66	1.7	256	257	56	NA	3
A-10	8:05	424.843	.29	75	77	67	1.6	255	258	55	NA	3
A-11	8:10	428.564	.25	74	78	68	1.4	255	257	55	NA	3
A-12	8:15	431.922	.26	75	78	69	1.4	255	257	55	NA	3
	8:20	435.342										
B-1	9:30	435.594	.27	76	72	70	1.5	258	260	55	NA	3
B-2	9:35	439.151	.27	73	72	70	1.5	256	259	57	NA	3
B-3	9:40	442.663	.28	76	73	70	1.5	256	260	57	NA	3
B-4	9:45	446.131	.27	76	75	71	1.5	255	257	57	NA	3
B-5	9:50	449.575	.26	77	76	71	1.4	255	255	58	NA	3
B-6	9:55	453.012	.25	77	77	72	1.4	256	258	58	NA	3
B-7	10:00	456.353	.23	73	78	72	1.3	256	260	58	NA	3
B-8	10:05	459.671	.25	75	79	72	1.4	256	257	58	NA	3
B-9	10:10	463.019	.27	75	80	73	1.5	256	257	58	NA	3
B-10	10:15	466.577	.29	75	80	74	1.6	256	260	58	NA	3
B-11	10:20	470.130	.26	74	81	74	1.4	256	259	59	NA	3
B-12	10:25	473.761	.22	75	82	75	1.2	256	257	59	NA	3
	10:30	477.003										

Comments/notes:

© 2016 TRC Environmental Corp.

TRC

Isokinetic Test Support Data

Company:	Elkhart Brass	Project#:	253282
Plant:	Elkhart, IN	Test Method(s):	5
Unit ID:	Tap Hood	Test Run #:	2
Location:	Stack	Test Date(s):	5/11/16

Console Operator:	Cameron Dillion	Unit Operating Mode:	Normal
Console ID:	E19	Duct Shape/Area:	Round / 4.91 ft²
Meter Y:	.991	Fuel Type:	
Orifice $\Delta H_{@i}$:	1.85	F_d Factor:	dscf/MMBtu
Pitot Tube ID:	801	F_c Factor:	scf/MMBtu
Cal. coefficient (C_p):	.84	Fuel heat content:	Btu /
Probe Liner Material:	Glass	Process/fuel flow rate:	/ hr
Nozzle Material:	Stainless steel	Soot blown?	N/A
Nozzle Diameter (D_n):	.268 in	Duration:	N/A min

Sample collection time				Tare wt.	Final wt:
Total # of points:	24	Imp #	Contents	(grams)	(grams)
Target Sample time/point:	5.0 min	1	H_2O	676.8	687.2
Target run duration:	120 min	2	H_2O	650.8	653.5
		3	Empty	589.4	590.9
Barometric Pressure (P_{bar}):	29.20 in Hg	4	Silica Gel	776	786.5
Stack Static Pressure (P_g):	-.15 in H2O				
Stack Pressure (P_s):	29.19 in Hg				
				Net grams (M_{H2O}):	25.1

Leak Checks				
Pre-Test Train Leak Check:	.000 CFM @ 10 "Hg			
Pre-Test Pitot Leak Check:	Pass (Pass or Fail)	Fixed Gas Analysis:		
Post-Test Train Leak Rate:	.000 CFM @ 6 "Hg	CO_2:	0	%vol
Post-Test Pitot Leak Check:	Pass (Pass or Fail)	O_2:	20.9	%vol
Pump/Orifice Leak Check:	Pass (Pass or Fail)	N_2:	79.1	%vol
Filter/Thimble ID:	9469			
Tare Weight:	.6641 grams			

Description of Filter and Front Half Rinses:

Description of Impinger liquid:

General Comments:

© 2016 TRC Environmental Corp.

AM-EMT-15 Rev. 35.4
1/6/2016

TRC

Company:	Elkhart Brass	Job #:	253282	Test Date:	5/11/16
Plant:	Elkhart, IN	Methods:	5	X-Factor:	5.508
Unit:	Tap Hood	Run #:	2	Minutes/pt:	5
Location:	Stack	Traverse Sheet:	1 of 1		

Port & Point ID	Clock Time	Meter Volume ft³	ΔP in. H_2O	Stack °F	Dry Gas Meter Inlet °F	Dry Gas Meter Outlet °F	Orifice ΔH in. H_2O	This data not entered in Excel: Probe Liner °F	Filter Outlet °F	Impinger Train Outlet °F	Impinger Train CPM Filter °F	Pump Vacuum in. Hg
B-1	11:30	477.275	.27	76	79	77	1.5	249	258	60	NA	3
B-2	11:35	480.812	.27	75	82	78	1.5	256	258	56	NA	3
B-3	11:40	484.233	.28	76	85	79	1.6	256	257	57	NA	3
B-4	11:45	487.921	.27	78	86	79	1.5	255	258	57	NA	3
B-5	11:50	491.513	.26	77	88	80	1.5	256	257	57	NA	3
B-6	11:55	494.998	.24	77	88	80	1.3	256	259	58	NA	3
B-7	12:00	498.337	.23	77	88	81	1.3	257	257	58	NA	3
B-8	12:05	501.633	.25	78	88	82	1.4	257	258	58	NA	3
B-9	12:10	505.042	.27	77	89	82	1.5	257	258	58	NA	3
B-10	12:15	508.612	.29	77	89	83	1.6	257	258	58	NA	3
B-11	12:20	512.487	.28	78	90	83	1.6	257	258	58	NA	3
B-12	12:25	515.913	.26	78	90	84	1.5	257	258	58	NA	3
	12:30	519.491										
A-1	12:40	519.627	.29	78	87	85	1.6	258	258	60	NA	3
A-2	12:45	523.283	.25	81	90	86	1.4	256	258	60	NA	3
A-3	12:50	526.833	.29	80	90	86	1.6	256	256	61	NA	3
A-4	12:55	530.419	.31	81	90	87	1.7	256	258	60	NA	3
A-5	13:00	534.043	.31	79	91	86	1.7	256	257	60	NA	3
A-6	13:05	538.289	.30	81	92	87	1.7	256	258	58	NA	3
A-7	13:10	542.011	.28	80	92	87	1.6	256	258	58	NA	3
A-8	13:15	545.412	.31	82	93	87	1.7	256	254	58	NA	3
A-9	13:20	549.166	.32	82	92	87	1.8	256	257	58	NA	3
A-10	13:25	553.079	.30	82	93	88	1.7	256	258	58	NA	3
A-11	13:30	556.832	.25	81	93	88	1.4	256	257	58	NA	3
A-12	13:35	560.122	.22	82	92	88	1.2	257	257	58	NA	3
	13:40	563.744										

Comments/notes:

© 2016 TRC Environmental Corp.

TRC

Isokinetic Test Support Data

Company:	Elkhart Brass	Project#:	253282
Plant:	Elkhart, IN	Test Method(s):	5
Unit ID:	Tap Hood	Test Run #:	3
Location:	Stack	Test Date(s):	5/11/16

Console Operator:	Cameron Dillion	Unit Operating Mode:	Normal
Console ID:	E19	Duct Shape/Area:	Round / 4.91 ft²
Meter Y:	.991	Fuel Type:	
Orifice $\Delta H_{@i}$:	1.85	F_d Factor:	dscf/MMBtu
Pitot Tube ID:	.801	F_c Factor:	scf/MMBtu
Cal. coefficient (C_p):	.84	Fuel heat content:	Btu /
Probe Liner Material:	Glass	Process/fuel flow rate:	/ hr
Nozzle Material:	Stainless Steel	Soot blown?	N/A
Nozzle Diameter (D_n):	.268 in	Duration:	N/A min

Sample collection time				Tare wt.	Final wt:
Total # of points:	24	Imp #	Contents	(grams)	(grams)
Target Sample time/point:	5.0 min	1	H_2O	687.2	700.2
Target run duration:	120 min	2	H_2O	653.5	655.3
		3	Empty	590.9	592.0
Barometric Pressure (P_{bar}):	29.20 in Hg	4	Silica Gel	786.5	793.3
Stack Static Pressure (P_g):	-.15 in H2O				
Stack Pressure (P_s):	29.19 in Hg				
				Net grams (M_{H2O}):	22.7

Leak Checks			
Pre-Test Train Leak Check:	.000 CFM @ 10 "Hg		
Pre-Test Pitot Leak Check:	Pass (Pass or Fail)	Fixed Gas Analysis:	
Post-Test Train Leak Rate:	.000 CFM @ 6 "Hg	CO_2:	0 %vol
Post-Test Pitot Leak Check:	Pass (Pass or Fail)	O_2:	20.9 %vol
Pump/Orifice Leak Check:	Pass (Pass or Fail)	N_2:	79.1 %vol
Filter/Thimble ID:	9472		
Tare Weight:	.6658 grams		

Description of Filter and Front Half Rinses:

Description of Impinger liquid:

General Comments:

© 2016 TRC Environmental Corp.

AM-EMT-15 Rev. 35.4
1/6/2016

TRC

Company:	Elkhart Brass	Job #:	253282	Test Date:	5/11/16
Plant:	Elkhart, IN	Methods:	5	X-Factor:	5.508
Unit:	Tap Hood	Run #:	3	Minutes/pt:	5
Location:	Stack	Traverse Sheet:	1 of 1		

Port & Point ID	Clock Time	Meter Volume ft^3	ΔP in. H_2O	Stack °F	Dry Gas Meter Inlet °F	Dry Gas Meter Outlet °F	Orifice ΔH in. H_2O	This data not entered in Excel: Probe Liner °F	Filter Outlet °F	Impinger Train Outlet °F	Impinger Train CPM Filter °F	Pump Vacuum in. Hg
A-1	14:40	563.955	.26	82	81	81	1.4	261	258	65	NA	3
A-2	14:45	567.511	.26	82	80	81	1.4	257	257	58	NA	3
A-3	14:50	570.863	.28	82	82	81	1.5	256	257	58	NA	3
A-4	14:55	574.382	.31	82	83	81	1.7	256	256	57	NA	3
A-5	15:00	578.139	.32	82	85	81	1.8	256	258	56	NA	3
A-6	15:05	582.020	.31	83	86	81	1.7	256	259	56	NA	3
A-7	15:10	585.792	.27	83	87	81	1.5	256	258	57	NA	3
A-8	15:15	589.362	.30	82	88	82	1.7	257	257	56	NA	3
A-9	15:20	593.113	.31	82	88	82	1.7	256	257	56	NA	3
A-10	15:25	596.913	.30	82	88	82	1.7	256	255	56	NA	3
A-11	15:30	600.668	.24	82	89	83	1.3	257	258	56	NA	3
A-12	15:35	603.957	.24	81	88	83	1.3	257	258	56	NA	3
	15:40	607.234										
B-1	15:55	607.371	.27	81	85	83	1.5	258	259	62	NA	3
B-2	16:00	611.008	.28	81	86	84	1.6	257	259	56	NA	3
B-3	16:05	614.513	.27	82	88	83	1.5	256	257	56	NA	3
B-4	16:10	618.043	.27	82	88	83	1.5	257	258	56	NA	3
B-5	16:15	621.579	.26	82	88	84	1.4	257	258	56	NA	3
B-6	16:20	625.023	.25	83	88	84	1.4	257	258	56	NA	3
B-7	16:25	628.248	.23	83	88	83	1.3	257	258	57	NA	3
B-8	16:30	631.322	.24	85	88	83	1.3	257	258	57	NA	3
B-9	16:35	635.152	.26	85	88	83	1.4	257	259	58	NA	3
B-10	16:40	638.659	.28	84	88	83	1.6	257	258	58	NA	3
B-11	16:45	642.288	.27	84	89	84	1.5	256	258	59	NA	3
B-12	16:50	645.826	.25	84	89	84	1.4	256	257	59	NA	3
	16:55	649.338										

Comments/notes:

© 2016 TRC Environmental Corp.

TRC

Isokinetic Test Support Data

Company:	Elkhart Brass	Project#:	253282
Plant:	Elkhart, IN	Test Method(s):	12
Unit ID:	Melt 1	Test Run #:	1
Location:	Stack	Test Date(s):	5/11/2016

Console Operator:	G. Rock	Unit Operating Mode:	Normal
Console ID:	E20	Duct Shape/Area:	Round / 4.24 ft^2
Meter Y:	1.003	Fuel Type:	
Orifice $\Delta H_{@i}$:	1.611	F_d Factor:	dscf/MMBtu
Pitot Tube ID:	790	F_c Factor:	scf/MMBtu
Cal. coefficient (C_p):	0.84	Fuel heat content:	Btu /
Probe Liner Material:	Glass	Process/fuel flow rate:	/ hr
Nozzle Material:	Inconel	Soot blown?	N/A
Nozzle Diameter (D_n):	0.298 in	Duration:	N/A min

Sample collection time

Total # of points:	24	
Target Sample time/point:	5.0	min
Target run duration:	120.0	min
Barometric Pressure (P_{bar}):	29.17	in Hg
Stack Static Pressure (P_g):	-0.80	in H2O
Stack Pressure (P_s):	29.11	in Hg

Imp #	Contents	Tare wt. (grams)	Final wt: (grams)
1	~~H_2O~~ 0.1 M HNO_3	736.9	743.1
2	~~H_2O~~ 0.1 M HNO_3	733.3	735.3
3	Empty	593.3	595.1
4	Silica Gel	785.0	799.7
		Net grams (M_{H2O}):	24.7

Leak Checks

Pre-Test Train Leak Check:	0.002	CFM @ 10 "Hg	
Pre-Test Pitot Leak Check:	Pass	(Pass or Fail)	
Post-Test Train Leak Rate:	0.004	CFM @ 7 "Hg	
Post-Test Pitot Leak Check:	Pass	(Pass or Fail)	
Pump/Orifice Leak Check:	Pass	(Pass or Fail)	
Filter/Thimble ID:			
Tare Weight:		grams	

Fixed Gas Analysis:

CO_2:	0.0	%vol
O_2:	20.9	%vol
N_2:	79.1	%vol

Description of Filter and Front Half Rinses:

Description of Impinger liquid:

General Comments:

© 2016 TRC Environmental Corp.

AM-EMT-15 Rev. 35.4
1/6/2016

TRC

Company: Elkhart Brass
Plant:
Unit:
Location:

Job #: 253282
Methods: 12
Run #: 1
Traverse Sheet: 1 of 1

Test Date: 5-11-2016
X-Factor: 7.336
Minutes/pt: 5

Port & Point ID	Clock Time	Meter Volume ft³	ΔP in. H_2O	Stack °F	Dry Gas Meter Inlet °F	Dry Gas Meter Outlet °F	Orifice ΔH in. H_2O	This data not entered in Excel: Probe Liner °F	Filter Outlet °F	Impinger Train Outlet °F	Impinger Train CPM Filter °F	Pump Vacuum in. Hg
1-1	7:20	745.793	.15	69	63	61	1.1	259	248	54		2
2	725	748.9	.19	68	65	61	1.4	257	255	54		2
3	730	752.35	.20	69	69	64	1.5	257	255	53		2
4	735	755.9	.21	67	73	64	1.6	256	253	54		2
5	740	759.5	.2	71	75	66	1.5	257	255	54		2
6	745	763.05	.17	68	80	73	1.3	256	256	54		2
7	750	766.35	.15	67	77	66	1.1	256	255	53		2
8	755	769.47	.16	70	77	66	1.2	256	252	53		2
9	800	772.73	.17	68	78	70	1.3	255	253	53		2
10	805	776.08	.18	69	79	75	1.4	255	256	53		2
11	810	779.65	.18	69	80	69	1.3	255	248	53		2
12	815	783.0	.17	74	80	70	1.3	255	260	54		2
	820	786.384										
2-1	930	786.738	.21	69	75	74	1.6	260	257	57		2
2	935	790.6	.23	74	77	74	1.7	257	251	57		3
3	940	794.4	.25	71	81	75	1.8	256	251	57		3
4	945	798.3	.23	70	84	75	1.7	256	245	57		3
5	950	802.2	.2	77	86	77	1.5	255	245	57		3
6	955	805.95	.18	79	86	77	1.4	267	257	58		3
7	1000	809.73	.15	78	86	82	1.1	265	253	57		3
8	1005	812.85	.16	79	86	82	1.2	261	251	57		3
9	1010	816.01	.18	82	88	78	1.3	257	235	57		3
10	1015	819.3	.19	82	88	78	1.4	256	245	58		3
11	1020	822.9	.19	79	88	78	1.4	258	248	59		3
12	1025	826.4	.19	79	88	78	1.4	256	249	60		3
	1030	829.928										

Comments/notes:

© 2016 TRC Environmental Corp.

TRC

Isokinetic Test Support Data

Company:	Elkhart Brass	Project#:	253282
Plant:	Elkhart, IN	Test Method(s):	12
Unit ID:	Melt 1	Test Run #:	2
Location:	Stack	Test Date(s):	5/11/2016

Console Operator:	G. Rock	Unit Operating Mode:	Normal
Console ID:	E20	Duct Shape/Area:	Round / 4.24 ft^2
Meter Y:	1.003	Fuel Type:	
Orifice $\Delta H_{@i}$:	1.611	F_d Factor:	dscf/MMBtu
Pitot Tube ID:	790	F_c Factor:	scf/MMBtu
Cal. coefficient (C_p):	0.84	Fuel heat content:	Btu /
Probe Liner Material:	Glass	Process/fuel flow rate:	/ hr
Nozzle Material:	Inconel	Soot blown?	N/A
Nozzle Diameter (D_n):	0.298 in	Duration:	N/A min

Sample collection time		
Total # of points:	24	
Target Sample time/point:	5.0	min
Target run duration:	120.0	min
Barometric Pressure (P_{bar}):	29.20	in Hg
Stack Static Pressure (P_g):	-0.80	in H2O
Stack Pressure (P_s):	29.14	in Hg

Imp #	Contents	Tare wt. (grams)	Final wt: (grams)
1	~~H2O~~ 0.1 M HNO3	743.1	755.1
2	~~H2O~~ 0.1 M HNO3	735.3	738.0
3	Empty	595.1	596.3
4	Silica Gel	799.7	811.3
		Net grams (M_{H2O}):	28.3

Leak Checks

Pre-Test Train Leak Check:	0.004	CFM @ 6 "Hg	
Pre-Test Pitot Leak Check:	Pass	(Pass or Fail)	
Post-Test Train Leak Rate:	0.003	CFM @ 5 "Hg	
Post-Test Pitot Leak Check:	Pass	(Pass or Fail)	
Pump/Orifice Leak Check:	Pass	(Pass or Fail)	
Filter/Thimble ID:			
Tare Weight:		grams	

Fixed Gas Analysis:

CO_2:	0.0	%vol
O_2:	20.9	%vol
N_2:	79.1	%vol

Description of Filter and Front Half Rinses:

Description of Impinger liquid:

General Comments:

© 2016 TRC Environmental Corp.

AM-EMT-15 Rev. 35.4
1/6/2016

TRC

Company: Elkhart Brass
Plant: Elkhart, Indiana
Unit: Furnace 1
Location: Stack

Job #: 253282
Methods: 12
Run #: 2
Traverse Sheet: 1 of 1

Test Date: 5-11-2016
X-Factor: 7.336
Minutes/pt: 5

Port & Point ID	Clock Time	Meter Volume ft³	ΔP in. H_2O	Stack °F	Dry Gas Meter Inlet °F	Dry Gas Meter Outlet °F	Orifice ΔH in. H_2O	Probe Liner °F	Filter Outlet °F	Impinger Train Outlet °F	CPM Filter °F	Pump Vacuum in. Hg
								This data not entered in Excel				
1-1	1130	830.218	.22	74	85	83	1.7	260	261	61		2
2	1135	834.15	.23	75	89	84	1.8	257	224	61		2
3	1140	838.095	.25	76	92	88	1.9	258	270	61		2
4	1145	842.14	.23	76	94	85	1.8	257	227	60		2
5	1150	846.13	.20	76	95	87	1.6	258	270	61		2
6	1155	849.83	.18	81	95	86	1.4	258	272	62		2
7	1200	853.31	.16	78	95	87	1.3	258	239	62		2
8	1205	856.7	.17	82	95	88	1.4	258	258	62		2
9	1210	860.26	.19	78	95	87	1.5	258	270	63		2
10	1215	863.97	.2	79	95	88	1.6	257	263	63		2
11	1220	867.6	.20	78	96	88	1.6	258	269	63		2
12	1225	871.38	.19	80	96	88	1.50	258	265	64		2
	1230	875.0										
2-1	1240	875.263	.18	82	90	89	1.4	261	272	68		2
2	1245	877.9	.19	79	94	89	1.5	258	268	64		2
3	1250	882.5	.19	83	96	90	1.5	259	269	66		2
4	1255	886.1	.2	80	98	91	1.53	259	266	66		2
5	1300	889.75	.19	83	99	91	1.5	258	266	67		2
6	1305	893.43	.17	80	99	91	1.3	259	268	67		2
7	1310	896.97	.15	85	99	91	1.1	259	268	66		2
8	1315	900.1	.16	80	100	92	1.3	258	268	66		2
9	1320	903.61	.16	83	99	92	1.4	258	267	66		2
10	1325	907.097	.18	80	99	92	1.4	259	268	66		2
11	1330	910.6	.18	80	99	92	1.4	259	267	66		2
12	1335	914.1	.17	80	99	93	1.3	255	265	66		2
	1340	917.575										

Comments/notes:

© 2015 TRC Environmental Corp.

TRC

Isokinetic Test Support Data

Company:	Elkhart Brass	Project#:	253282
Plant:	Elkhart, IN	Test Method(s):	12
Unit ID:	Melt 1	Test Run #:	3
Location:	Stack	Test Date(s):	5/11/2016

Console Operator:	G. Rock	Unit Operating Mode:	Normal
Console ID:	E20	Duct Shape/Area:	Round / 4.24 ft^2
Meter Y:	1.003	Fuel Type:	
Orifice $\Delta H_{@i}$:	1.611	F_d Factor:	dscf/MMBtu
Pitot Tube ID:	790	F_c Factor:	scf/MMBtu
Cal. coefficient (C_p):	0.84	Fuel heat content:	Btu /
Probe Liner Material:	Glass	Process/fuel flow rate:	/ hr
Nozzle Material:	Inconel	Soot blown?	N/A
Nozzle Diameter (D_n):	0.298 in	Duration:	N/A min

Sample collection time		
Total # of points:	24	
Target Sample time/point:	5.0	min
Target run duration:	120.0	min
Barometric Pressure (P_{bar}):	29.20	in Hg
Stack Static Pressure (P_g):	-0.80	in H2O
Stack Pressure (P_s):	29.14	in Hg

Imp #	Contents	Tare wt. (grams)	Final wt: (grams)
1	~~H20~~ 0.1 M HNO3	755.1	767.8
2	~~H20~~ 0.1 M HNO3	738.0	742.3
3	Empty	596.8	599.4
4	Silica Gel	807.5	821.1
		Net grams (M_{H20}):	33.2

Leak Checks

Pre-Test Train Leak Check:	0.003	CFM @ 7	"Hg
Pre-Test Pitot Leak Check:	Pass	(Pass or Fail)	
Post-Test Train Leak Rate:	0.003	CFM @ 7	"Hg
Post-Test Pitot Leak Check:	Pass	(Pass or Fail)	
Pump/Orifice Leak Check:	Pass	(Pass or Fail)	
Filter/Thimble ID:			
Tare Weight:		grams	

Fixed Gas Analysis:

CO_2:	0.0	%vol
O_2:	20.9	%vol
N_2:	79.1	%vol

Description of Filter and Front Half Rinses:

Description of Impinger liquid:

General Comments:

© 2016 TRC Environmental Corp.

TRC

Company:	Elkhart Brass	Job #:	253282	Test Date:	5-11-2016
Plant:	Elkhart, Indiana	Methods:	12	X-Factor:	7.336
Unit:	Furnace 1	Run #:	3	Minutes/pt:	5
Location:	Stack	Traverse Sheet:	1 of 1		

Port & Point ID	Clock Time	Meter Volume ft³	ΔP in. H_2O	Stack °F	Dry Gas Meter Inlet °F	Dry Gas Meter Outlet °F	Orifice ΔH in. H_2O	This data not entered in Excel: Probe Liner °F	Filter Outlet °F	Impinger Train Outlet °F	Impinger Train CPM Filter °F	Pump Vacuum in. Hg
1-1	1440	917.836	.18	81	90	87	1.4	255	259	61		3
2	1445	921.36	.2	80	92	91	1.5	253	258	55		3
3	1450	925.06	.2	79	94	90	1.5	254	259	55		3
4	1455	928.70	.19	83	96	90	1.5	254	258	56		3
5	1500	932.38	.19	80	98	90	1.5	252	249	57		4
6	1505	936.04	.17	78	98	91	1.3	252	255	57		3
7	1510	939.45	.14	77	98	91	1.2	254	260	57		3
8	1515	942.78	.17	77	98	91	1.3	254	260	57		3
9	1520	946.21	.18	78	99	91	1.3	254	259	57		3
10	1525	949.57	.18	77	99	92	1.5	253	256	57		3
11	1530	953.2	.17	84	99	92	1.3	253	260	58		3
12	1535	956.63	.17	82	99	92	1.3	254	261	58		3
	1540	960.078										
2-1	1555	960.316	.19	82	92	91	1.5	256	247	66		3
2	1600	964.01	.23	82	96	92	1.8	254	266	54		4
3	1605	967.94	.23	82	96	92	1.8	256	260	54		4
4	1610	971.87	.22	82	99	92	1.8	253	248	55		4
5	1615	975.8	.2	84	100	96	1.5	254	245	56		4
6	1620	979.5	.18	84	100	92	1.4	253	250	57		4
7	1625	983.07	.15	87	100	92	1.2	253	245	57		3.5
8	1630	986.49	.16	86	99	93	1.2	254	258	59		3.5
9	1635	989.87	.18	86	100	93	1.4	254	258	59		3.5
10	1640	993.18	.19	89	100	93	1.5	254	258	59		3.5
11	1645	996.8	.18	85	100	93	1.4	250	250	59		3.5
12	1650	1000.3		87	100	93	1.4	238	238	59		3.5
	1655	1003.901										

Comments/notes:

© 2015 TRC Environmental Corp.

TRC

Isokinetic Test Support Data

Company:	ELKHART BRASS	Project#:	253282
Plant:	ELKHART, IN	Test Method(s):	M5
Unit ID:	MELT 2	Test Run #:	1
Location:	STACK	Test Date(s):	5-11-16

Console Operator:	BMC	Unit Operating Mode:	NORMAL
Console ID:	E37	Duct Shape/Area:	ROUND / 4.24 ft²
Meter Y:	0.993	Fuel Type:	
Orifice $\Delta H_{@i}$:	1.850	F_d Factor:	dscf/MMBtu
Pitot Tube ID:	793A	F_c Factor:	scf/MMBtu
Cal. coefficient (C_p):	0.840	Fuel heat content:	Btu /
Probe Liner Material:	GLASS	Process/fuel flow rate:	/ hr
Nozzle Material:	~~NICKEL~~ S.S.	Soot blown?	N/A
Nozzle Diameter (D_n):	0.300 in	Duration:	N/A min

Sample collection time			
Total # of points:	24		
Target Sample time/point:	5 min		
Target run duration:	120 min		
Barometric Pressure (P_{bar}):	29.17 in Hg		
Stack Static Pressure (P_g):	-0.18 in H2O		
Stack Pressure (P_s):	29.16 in Hg		

Imp #	Contents	Tare wt. (grams)	Final wt: (grams)
1	~~H_2O~~ 0.1N HNO_3	747.0	789.9
2	~~H_2O~~ 0.1N HNO_3	697.0	862.1
3	Empty	606.3	812.6
4	Silica Gel	735.6	756.5
		Net grams (M_{H2O}):	35.2

Leak Checks			
Pre-Test Train Leak Check:	0.000 CFM @ 13 "Hg		
Pre-Test Pitot Leak Check:	PASS (Pass or Fail)	Fixed Gas Analysis:	
Post-Test Train Leak Rate:	0.000 CFM @ 5 "Hg	CO_2:	0 %vol
Post-Test Pitot Leak Check:	PASS (Pass or Fail)	O_2:	20.9 %vol
Pump/Orifice Leak Check:	PASS (Pass or Fail)	N_2:	79.1 %vol
Filter/Thimble ID:			
Tare Weight:	grams		

Description of Filter and Front Half Rinses:

Description of Impinger liquid:

General Comments:

© 2016 TRC Environmental Corp.

AM-EMT-15 Rev. 35.4
1/6/2016

TRC

Company: ELKHART BRASS
Plant: ELKHART, IN
Unit: MELT 2
Location: STACK

Job #: 253282
Methods: M12
Run #: 1
Traverse Sheet: 1 of 1

Test Date: 5-11-16
X-Factor: 8.648
Minutes/pt: 5

Port & Point ID	Clock Time	Meter Volume ft³	ΔP in. H_2O	Stack °F	Dry Gas Meter Inlet °F	Dry Gas Meter Outlet °F	Orifice ΔH in. H_2O	This data not entered in Excel: Probe Liner °F	Filter Outlet °F	Impinger Train Outlet °F	Impinger Train CPM Filter °F	Pump Vacuum in. Hg
1-1	7:20	190.015	0.13	69	63	62	1.1	245	252	53	N/A	2
2	7:25	193.09	0.15	69	67	62	1.3	246	251	49		2
3	7:30	196.13	0.15	71	70	63	1.3	252	253	49		2
4	7:35	199.38	0.18	72	73	64	1.6	253	255	51		2
5	7:40	202.79	0.19	71	74	65	1.6	254	253	52		2
6	7:45	206.31	0.22	71	76	66	1.9	253	254	54		2
7	7:50	210.06	0.26	70	77	67	2.3	252	255	55		3
8	7:55	214.24	0.30	70	78	68	2.6	252	255	56		3
9	8:00	218.69	0.32	72	79	69	2.8	252	255	59		3
10	8:05	223.31	0.34	71	80	70	3.0	250	251	58		4
11	8:10	228.16	0.36	72	81	70	3.1	251	253	56		4
12	8:15	232.99	0.34	72	82	71	3.0	250	257	53		4
	8:20	237.641										
2-1	9:30	237.917	0.19	70	76	75	1.7	254	255	55		2.5
2	9:35	241.62	0.18	73	79	75	1.6	252	255	46		2.5
3	9:40	245.13	0.22	71	82	76	1.9	251	256	47		2.5
4	9:45	248.92	0.22	73	84	76	1.9	252	256	48		2.5
5	9:50	252.87	0.25	74	85	77	2.2	251	256	49		3
6	9:55	256.86	0.27	75	85	77	2.4	251	254	50		3
7	10:00	261.19	0.30	80	86	78	2.6	250	255	51		3
8	10:05	265.56	0.33	78	87	78	2.9	250	257	51		3.5
9	10:10	270.28	0.33	79	87	79	2.9	251	254	52		3.5
10	10:15	275.01	0.24	77	88	79	2.1	251	257	52		3
11	10:20	279.05	0.22	79	88	80	1.9	251	253	53		2.5
12	10:25	282.89	0.23	75	88	80	2.0	252	254	53		2.5
	10:30	286.823										

Comments/notes:

© 2016 TRC Environmental Corp.

TRC

Isokinetic Test Support Data

Company:	ELKHART BRASS	Project#:	253282
Plant:	ELKHART, IN	Test Method(s):	M12
Unit ID:	MELT 2	Test Run #:	2
Location:	STACK	Test Date(s):	5-11-16

Console Operator:	BMC	Unit Operating Mode:	NORMAL
Console ID:	E37	Duct Shape/Area:	ROUND / 4.24 ft²
Meter Y:	0.993	Fuel Type:	
Orifice $\Delta H_{@i}$:	1.850	F_d Factor:	dscf/MMBtu
Pitot Tube ID:	793A	F_c Factor:	scf/MMBtu
Cal. coefficient (C_p):	0.840	Fuel heat content:	Btu /
Probe Liner Material:	GLASS	Process/fuel flow rate:	/ hr
Nozzle Material:	~~NICKEL~~ S.S.	Soot blown?	N/A
Nozzle Diameter (D_n):	0.300 in	Duration:	N/A min

Sample collection time

Total # of points: 24

Target Sample time/point: 5 min

Target run duration: 120 min

Barometric Pressure (P_{bar}): 29.20 in Hg

Stack Static Pressure (P_g): -0.18 in H2O

Stack Pressure (P_s): 29.19 in Hg

Imp #	Contents	Tare wt. (grams)	Final wt: (grams)
1	~~H_2O~~ 0.1N HNO_3	747.2	753.2
2	~~H_2O~~ 0.1N HNO_3	747.0	759.0
3	Empty	626.3	629.5
4	Silica Gel	687.7	705.0

Net grams (M_{H2O}): 38.5

Leak Checks

Pre-Test Train Leak Check: 0.000 CFM @ 13 "Hg

Pre-Test Pitot Leak Check: PASS (Pass or Fail)

Post-Test Train Leak Rate: 0.000 CFM @ 13 "Hg

Post-Test Pitot Leak Check: PASS (Pass or Fail)

Pump/Orifice Leak Check: PASS (Pass or Fail)

Filter/Thimble ID:

Tare Weight: grams

Fixed Gas Analysis:

CO_2: 0 %vol

O_2: 20.9 %vol

N_2: 79.1 %vol

Description of Filter and Front Half Rinses:

Description of Impinger liquid:

General Comments:

© 2016 TRC Environmental Corp.

AM-EMT-15 Rev. 35.4
1/6/2016

TRC

Company:	ELKHART BRASS	Job #:	253282	Test Date:	5-11-16
Plant:	ELKHART, IN	Methods:	M12	X-Factor:	8.648
Unit:	MELT 2	Run #:	2	Minutes/pt:	5
Location:	STACK	Traverse Sheet:	1 of 1		

This data not entered in Excel

Port & Point ID	Clock Time	Meter Volume ft³	ΔP in. H_2O	Stack °F	Dry Gas Meter Inlet °F	Dry Gas Meter Outlet °F	Orifice ΔH in. H_2O	Probe Liner °F	Filter Outlet °F	Impinger Train Outlet °F	Impinger Train CPM Filter °F	Pump Vacuum in. Hg
1-1	11:30	287.513	0.19	76	85	84	1.7	253	254	51	N/A	2
2	11:35	291.23	0.23	77	87	85	2.0	251	254	50		2
3	11:40	295.18	0.24	77	91	87	2.1	252	254	52		2.5
4	11:45	299.31	0.25	78	92	85	2.2	251	254	54		2.5
5	11:50	303.51	0.24	80	93	86	2.1	251	254	54		2.5
6	11:55	307.53	0.26	80	93	86	2.3	252	256	53		3
7	12:00	311.86	0.28	81	94	86	2.5	252	255	53		3
8	12:05	316.36	0.32	81	95	87	2.8	250	254	53		3
9	12:10	321.03	0.34	80	95	88	3.0	251	256	54		3.5
10	12:15	325.88	0.33	80	95	88	2.9	251	256	54		3
11	12:20	330.71	0.24	81	96	88	2.1	251	258	55		2.5
12	12:25	334.76	0.21	81	95	88	1.9	251	257	55		2.5
	12:30	338.652										
			5-11-16									
2-1	12:40	339.114 ~~85~~	0.10	78	91	89	0.88	253	257	58		1.5
2	12:45	341.83	0.13	79	92	89	1.2	253	256	57		2
3	12:50	344.82	0.15	81	94	90	1.3	253	256	57		2
4	12:55	348.34	0.17	81	95	90	1.5	253	256	57		2
5	13:00	351.83	0.20	83	96	90	1.8	253	257	58		2.5
6	13:05	355.69	0.21	83	97	91	1.9	252	257	58		2.5
7	13:10	359.58	0.27	85	98	91	2.4	253	255	58		3
8	13:15	363.95	0.30	83	99	92	2.7	251	256	58		3
9	13:20	368.61	0.33	84	100	92	2.9	251	257	58		3.5
10	13:25	373.38	0.34	83	100	93	3.0	250	257	58		3.5
11	13:30	378.27	0.35	86	100	93	3.1	250	257	58		3.5
12	13:35	383.22	0.33	83	101	94	2.9	250	255	58		3.5
	13:40	388.002										

Comments/notes:

© 2016 TRC Environmental Corp.

TRC

Isokinetic Test Support Data

Company:	EUKHART BRASS	Project#:	253282
Plant:	EUKHART, IN	Test Method(s):	M12
Unit ID:	MELT 2	Test Run #:	3
Location:	STACK	Test Date(s):	5-11-16

Console Operator:	BMC	Unit Operating Mode:	NORMAL
Console ID:	E37	Duct Shape/Area:	ROUND / 4.24 ft²
Meter Y:	0.993	Fuel Type:	
Orifice $\Delta H_{@i}$:	1.850	F_d Factor:	dscf/MMBtu
Pitot Tube ID:	793A	F_c Factor:	scf/MMBtu
Cal. coefficient (C_p):	0.840	Fuel heat content:	Btu /
Probe Liner Material:	GLASS	Process/fuel flow rate:	/ hr
Nozzle Material:	~~NICKEL~~ S.S.	Soot blown?	N/A
Nozzle Diameter (D_n):	0.300 in	Duration:	N/A min

Sample collection time

Total # of points: 24

Target Sample time/point: 5 min

Target run duration: 120 min

Barometric Pressure (P_{bar}): 29.20 in Hg

Stack Static Pressure (P_g): -0.18 in H2O

Stack Pressure (P_s): 29.19 in Hg

Imp #	Contents	Tare wt. (grams)	Final wt: (grams)
1	~~H_2O~~ 0.1N HNO_3	747.2	748.2
2	~~H_2O~~ 0.1N HNO_3	700.9	714.3
3	Empty	608.1	611.6
4	Silica Gel	715.8	735.9

Net grams (M_{H2O}): 38.0

Leak Checks

Pre-Test Train Leak Check: 0.000 CFM @ 13 "Hg

Pre-Test Pitot Leak Check: PASS (Pass or Fail)

Post-Test Train Leak Rate: 0.000 CFM @ 7 "Hg

Post-Test Pitot Leak Check: PASS (Pass or Fail)

Pump/Orifice Leak Check: PASS (Pass or Fail)

Filter/Thimble ID:

Tare Weight: grams

Fixed Gas Analysis:

CO_2: 0 %vol

O_2: 20.9 %vol

N_2: 79.1 %vol

Description of Filter and Front Half Rinses:

Description of Impinger liquid:

General Comments:

© 2016 TRC Environmental Corp.

AM-EMT-15 Rev. 35.4
1/6/2016

TRC

Company:	ELKHART BRASS	Job #:	253282	Test Date:	5-11-16
Plant:	ELKHART, IN	Methods:	M12	X-Factor:	8.648
Unit:	MELT 2	Run #:	3	Minutes/pt:	5
Location:	STACK	Traverse Sheet:	1 of 1		

This data not entered in Excel

Port & Point ID	Clock Time	Meter Volume ft^3	ΔP in. H_2O	Stack °F	Dry Gas Meter Inlet °F	Dry Gas Meter Outlet °F	Orifice ΔH in. H_2O	Probe Liner °F	Filter Outlet °F	Impinger Train Outlet °F	Impinger Train CPM Filter °F	Pump Vacuum in. Hg
1-1	14:40	388.517	0.11	80	90	90	0.97	255	254	64	N/A	2
2	14:45	391.39	0.15	81	90	90	1.3	253	252	64		3
3	14:50	394.72	0.17	83	93	90	1.5	252	255	59		3
4	14:55	398.26	0.17	83	95	90	1.5	252	256	59		3
5	15:00	401.81	0.19	82	96	90	1.7	251	253	59		3
6	15:05	405.57	0.19	82	97	91	1.7	252	251	58		3
7	15:10	409.46	0.25	82	98	91	2.2	252	255	59		4
8	15:15	413.53	0.32	83	98	91	2.8	251	256	59		5
9	15:20	418.23	0.32	82	99	92	2.8	251	258	59		5
10	15.25	422.91	0.33	86	99	92	2.9	250	257	60		5
11	15:30	427.83	0.34	83	99	92	3.0	250	250	60		5
12	15:35	432.62	0.31	83	100	94	2.8	251	254	61		5
	15:40	437.332										
2-1	15:55	437.712	0.21	83	93	92	1.9	253	254	58		3.5
2	16:00	441.69	0.24	84	95	92	2.1	252	258	57		4
3	16:05	445.78	0.22	84	96	92	1.9	251	256	57		3.5
4	16:10	449.77	0.24	85	97	92	2.1	251	256	58		4
5	16:15	453.71	0.25	85	98	92	2.2	251	255	59		4
6	16:20	457.88	0.30	83	98	92	2.7	251	255	59		5
7	16:25	461.51	0.33	82	99	92	2.9	251	255	60		5
8	16:30	467.27	0.34	81	99	92	3.0	250	257	61		5
9	16:35	472.18	0.36	81	100	92	3.2	251	254	61		5.5
10	16:40	477.21	0.34	85	100	93	3.0	250	256	62		5
11	16:45	482.19	0.25	85	100	93	2.2	251	256	62		4
12	16:50	486.56	0.24	85	100	93	2.1	251	253	63		4
	16:55	490.728										

Comments/notes:

© 2016 TRC Environmental Corp.

TRC

Isokinetic Test Support Data

Company:	Elkhart Brass	Project#:	253282
Plant:	Elkhart IN	Test Method(s):	12
Unit ID:	Top Hood	Test Run #:	1
Location:	Stack	Test Date(s):	5/11/16

Console Operator:	Gavin Lewis	Unit Operating Mode:	Normal
Console ID:	E57	Duct Shape/Area:	Round / 4.91 ft²
Meter Y:	0.993	Fuel Type:	
Orifice $\Delta H_{@i}$:	1.832	F_d Factor:	dscf/MMBtu
Pitot Tube ID:	872	F_c Factor:	scf/MMBtu
Cal. coefficient (C_p):	.84	Fuel heat content:	Btu /
Probe Liner Material:	Glass	Process/fuel flow rate:	/ hr
Nozzle Material:	SS	Soot blown?	N/A
Nozzle Diameter (D_n):	0.272 in	Duration:	N/A min

Sample collection time

Total # of points:	24	
Target Sample time/point:	5	min
Target run duration:	120	min
Barometric Pressure (P_{bar}):	29.17	in Hg
Stack Static Pressure (P_g):	-0.15	in H2O
Stack Pressure (P_s):		in Hg

Imp #	Contents	Tare wt. (grams)	Final wt: (grams)
1	~~H_2O~~ 0.1M HNO_3	706.9	687.7
2	~~H_2O~~ 0.1M HNO_3	656.0	676.2
3	Empty	630.6	637.7
4	Silica Gel	679.3	701.7
		Net grams (M_{H2O}):	30.5

Leak Checks

Pre-Test Train Leak Check:	0.000	CFM @ 10 "Hg
Pre-Test Pitot Leak Check:	Pass	(Pass or Fail)
Post-Test Train Leak Rate:	0.000	CFM @ 5 "Hg
Post-Test Pitot Leak Check:	Pass	(Pass or Fail)
Pump/Orifice Leak Check:	Pass	(Pass or Fail)
Filter/Thimble ID:	NA	
Tare Weight:	NA (unweighed)	grams

Fixed Gas Analysis:

CO_2:	0	%vol
O_2:	20.9	%vol
N_2:		%vol

Description of Filter and Front Half Rinses:

Description of Impinger liquid:

General Comments:

© 2016 TRC Environmental Corp.

AM-EMT-15 Rev. 35.4
1/6/2016

TRC

Company: Elkhart Brass
Plant: Elkhart, IN
Unit: Top Hood
Location: Stack

Job #: 253282
Methods: 12
Run #: 1
Traverse Sheet: 1 of 1

Test Date: 5/11/16
X-Factor: 5.788
Minutes/pt: 5

Port & Point ID	Clock Time	Meter Volume ft³	ΔP in. H₂O	Stack °F	Dry Gas Meter Inlet °F	Dry Gas Meter Outlet °F	Orifice ΔH in. H₂O	Probe Liner °F	Filter Outlet °F	Impinger Train Outlet °F	Impinger Train CPM Filter °F	Pump Vacuum in. Hg
								This data not entered in Excel				
A-1	720	733.782	0.25	74	62	61	1.40	256	251	57	NA	2
2	725	737.23	0.26	76	67	62	1.50	255	251	57		2
3	730	740.56	0.28	77	71	64	1.60	255	255	57		2
4	735	744.08	0.28	77	73	64	1.60	254	253	58		2
5	740	747.67	0.26	77	74	65	1.50	254	253	58		2
6	745	751.09	0.24	78	76	67	1.40	254	254	58		2
7	750	754.41	0.23	79	77	68	1.30	254	254	58		2
8	755	757.8	0.27	78	77	69	1.60	254	254	58		2
9	800	761.25	0.30	78	78	70	1.75	253	256	58		2
10	805	764.86	0.31	78	79	71	1.80	253	255	58		2
11	810	768.65	0.32	78	80	72	1.90	253	252	58		2
12	815	772.50	0.31	78	80	72	1.80	252	252	59		2
	820	775.405										
A-1	930	776.610	0.35	73	73	73	2.05	254	254	61		2
2	935	780.58	0.36	75	75	73	2.10	254	254	60		2
3	940	784.6	0.36	77	76	73	2.10	253	256	61		2
4	945	788.65	0.34	79	78	74	2.00	253	251	61		2
5	950	792.55	0.32	79	79	74	1.85	253	254	61		2
6	955	796.47	0.26	79	79	75	1.50	253	253	62		2
7	1000	799.89	0.25	76	80	75	1.50	252	254	62		2
8	1005	803.38	0.24	77	80	75	1.40	253	253	61		2
9	1010	806.78	0.25	77	81	75	1.50	253	253	61		2
10	1015	810.37	0.27	77	81	76	1.60	243	257	63		2
11	1020	814.00	0.28	77	82	76	1.60	254	256	65		2
12	1025	817.70	0.28	79	83	76	1.60	254	252	64		2
	1030	821.237										

Comments/notes:

© 2016 TRC Environmental Corp.

TRC

Isokinetic Test Support Data

Company:	Elkhart Brass	Project#:	253282
Plant:	Elkhart IN	Test Method(s):	12
Unit ID:	Top Hood	Test Run #:	2
Location:	Stack	Test Date(s):	5/11/16

Console Operator:	Gavin Lewis	Unit Operating Mode:	Normal
Console ID:	E57	Duct Shape/Area:	Round / 4.91 ft²
Meter Y:	0.993	Fuel Type:	
Orifice $\Delta H_{@i}$:	1.832	F_d Factor:	dscf/MMBtu
Pitot Tube ID:	872	F_c Factor:	scf/MMBtu
Cal. coefficient (C_p):	0.84	Fuel heat content:	Btu /
Probe Liner Material:	Glass	Process/fuel flow rate:	/ hr
Nozzle Material:	S.S.	Soot blown?	N/A
Nozzle Diameter (D_n):	0.272 in	Duration:	N/A min

Sample collection time		
Total # of points:	24	
Target Sample time/point:	5	min
Target run duration:	120	min
Barometric Pressure (P_{bar}):	29.2	in Hg
Stack Static Pressure (P_g):	-.15	in H2O
Stack Pressure (P_s):		in Hg

Imp #	Contents	Tare wt. (grams)	Final wt: (grams)
1	~~H_2O~~ 0.1M HNO3	677.2	677.6
2	~~H_2O~~ 0.1M KMnO3	684.9	699.2
3	Empty	633.0	635.8
4	Silica Gel	756.9	773.9
		Net grams (M_{H2O}):	34.5

Leak Checks		
Pre-Test Train Leak Check:	0.000	CFM @ 8 "Hg
Pre-Test Pitot Leak Check:	Pass	(Pass or Fail)
Post-Test Train Leak Rate:	0.000	CFM @ 8 "Hg
Post-Test Pitot Leak Check:	Pass	(Pass or Fail)
Pump/Orifice Leak Check:	Pass	(Pass or Fail)
Filter/Thimble ID:	NA	
Tare Weight:	NA (unweighed)	grams

Fixed Gas Analysis:

CO_2:	0	%vol
O_2:	20.9	%vol
N_2:		%vol

Description of Filter and Front Half Rinses:

Description of Impinger liquid:

General Comments:

© 2016 TRC Environmental Corp.

AM-EMT-15 Rev. 35.4
1/6/2016

TRC

Company:	Elkhart Brass	Job #:	253282	Test Date:	5/11/16
Plant:	Elkhart, IN	Methods:	12	X-Factor:	5.288
Unit:	Top Hood	Run #:	2	Minutes/pt:	5
Location:	Stack	Traverse Sheet:	1 of 1		

This data not entered in Excel

Port & Point ID	Clock Time	Meter Volume ft³	ΔP in. H_2O	Stack °F	Dry Gas Meter Inlet °F	Dry Gas Meter Outlet °F	Orifice ΔH in. H_2O	Probe Liner °F	Filter Outlet °F	Impinger Train Outlet °F	Impinger Train CPM Filter °F	Pump Vacuum in. Hg
A-1	1130	821.612	0.34	77	80	79	2.00	259	257	64	NA	3
2	1135	825.6	0.35	77	84	79	2.00	257	256	66		3
3	1140	829.55	0.36	78	86	80	2.10	257	256	66		3
4	1145	833.62	0.35	81	87	81	2.00	256	257	66		3
5	1150	837.65	0.32	79	88	81	1.90	257	255	56		3
6	1155	841.65	0.27	79	89	82	1.60	257	255	57		3
7	1200	845.28	0.25	80	89	83	1.50	258	257	60		3
8	1205	848.79	0.25	80	89	83	1.50	257	258	58		3
9	1210	852.3	0.25	80	89	83	1.50	257	254	57		3
10	1215	856.00	0.28	80	90	84	1.60	257	257	56		3
11	1220	859.78	0.28	80	90	84	1.60	257	256	58		3
12	1225	863.25	0.28	81	91	85	1.65	257	254	58		3
	1230	866.670										
B-1	1240	866.867	0.25	81	87	86	1.5	257	255	59		3
2	1245	870.34	0.27	82	88	86	1.6	257	257	58		3
3	1250	873.9	0.29	82	89	86	1.7	256	257	59		3
4	1255	877.6	0.28	83	89	86	1.65	254	256	60		3
5	1300	881.5	0.26	81	89	86	1.5	254	255	62		3
6	1305	885.2	0.23	83	89	86	1.40	256	256	65		3
7	1310	888.49	0.25	82	90	86	1.50	255	253	64		3
8	1315	891.85	0.29	84	90	87	1.70	257	259	64		3
9	1320	895.5	0.32	83	90	86	1.90	257	259	63		3
10	1325	899.5	0.32	84	90	86	1.90	257	258	62		3
11	1330	903.5	0.34	84	91	87	2.00	257	258	64		3
12	1335	908.13	0.32	85	90	87	1.90	257	258	66		3
	1340	911.432										

Comments/notes:

© 2016 TRC Environmental Corp.

TRC

Isokinetic Test Support Data

Company:	Elkhart Brass	Project#:	253282
Plant:	Elkhart IN	Test Method(s):	12
Unit ID:	Top Hood	Test Run #:	3
Location:	stack	Test Date(s):	5/11/16

Console Operator:	Gavin Lewis	Unit Operating Mode:	Normal
Console ID:	E57	Duct Shape/Area:	Round / 4.91 ft²
Meter Y:	0.993	Fuel Type:	
Orifice $\Delta H_{@i}$:	1.832	F_d Factor:	dscf/MMBtu
Pitot Tube ID:	872	F_c Factor:	scf/MMBtu
Cal. coefficient (C_p):	0.84	Fuel heat content:	Btu /
Probe Liner Material:	Glass	Process/fuel flow rate:	/ hr
Nozzle Material:	S.S.	Soot blown?	N/A
Nozzle Diameter (D_n):	0.272 in	Duration:	N/A min

Sample collection time

Total # of points:	24	
Target Sample time/point:	5	min
Target run duration:	120	min
Barometric Pressure (P_{bar}):	29.20	in Hg
Stack Static Pressure (P_g):	-0.15	in H2O
Stack Pressure (P_s):		in Hg

Imp #	Contents	Tare wt. (grams)	Final wt: (grams)
1	~~H2O~~ 0.1M HNO3	707.9	712.9
2	~~H2O~~ 0.1M HNO3	652.5	663.5
3	Empty	633.0	632.0
4	Silica Gel	690.3	709.3

Net grams (M_{H20}): 34.0

Leak Checks

Pre-Test Train Leak Check:	0.000	CFM @ 8 "Hg
Pre-Test Pitot Leak Check:	Pass	(Pass or Fail)
Post-Test Train Leak Rate:	0.000	CFM @ 8 "Hg
Post-Test Pitot Leak Check:	Pass	(Pass or Fail)
Pump/Orifice Leak Check:	Pass	(Pass or Fail)
Filter/Thimble ID:	NA	
Tare Weight:	NA	grams

Fixed Gas Analysis:

CO_2:	0	%vol
O_2:	20.9	%vol
N_2:		%vol

Description of Filter and Front Half Rinses:

Description of Impinger liquid:

General Comments:

© 2016 TRC Environmental Corp.

AM-EMT-15 Rev. 35.4
1/6/2016

TRC

Company: Elkhart Brass
Plant: Elkhart, IN
Unit: Top Hood
Location: Stack

Job #: 253282
Methods: 12
Run #: 3
Traverse Sheet: 1 of 1

Test Date: 5/11/16
X-Factor: 5.788
Minutes/pt: 5

Port & Point ID	Clock Time	Meter Volume ft³	ΔP in. H_2O	Stack °F	Dry Gas Meter Inlet °F	Dry Gas Meter Outlet °F	Orifice ΔH in. H_2O	Probe Liner °F	Filter Outlet °F	Impinger Train Outlet °F	Impinger Train CPM Filter °F	Pump Vacuum in. Hg
								This data not entered in Excel				
B-1	1400	911.71	0.27	84	79	80	1.60	258	258	50	NA	2
2	1445	915.60	0.28	84	80	80	1.60	257	259	54		2
3	1450	919.2	0.28	84	81	79	1.60	257	259	54		2
4	1455	922.98	0.28	84	82	79	1.60	257	257	54		2
5	1500	926.1	0.26	85	82	80	1.50	257	256	56		2
6	1505	929.6	0.22	85	83	80	1.30	257	256	56		2
7	1510	932.9	0.23	85	84	80	1.30	257	257	61		2
8	1515	936.16	0.28	85	85	80	1.60	257	256	60		2
9	1520	939.73	0.31	84	85	81	1.80	256	256	61		2
10	1525	943.48	0.32	84	86	81	1.90	255	257	61		2
11	1530	947.45	0.32	84	86	81	1.90	256	257	61		2
12	1535	951.27	0.31	84	87	81	1.80	255	257	61		2
	1540	955.115										
A-1	1555	955.2579	0.33	84	83	82	1.90	255	257	63		2
2	1600	959.25	0.34	84	84	82	2.0	256	257	64		2
3	1605	963.5	0.33	84	85	82	1.9	256	256	66		2
4	1610	967.2	0.32	84	85	81	1.9	257	257	64		2
5	1615	970.9	0.30	85	86	82	1.7	257	257	65		2
6	1620	974.67	0.27	86	85	81	1.6	257	257	65		2
7	1625	978.34	0.26	86	85	81	1.5	255	255	55		2
8	1630	981.75	0.25	87	85	81	1.40	257	259	55		2
9	1635	985.25	0.26	87	86	81	1.50	256	259	56		2
10	1640	988.65	0.28	86	86	82	1.60	256	255	55		2
11	1645	992.30	0.27	86	87	82	1.60	256	255	55		2
12	1650	996.00	0.27	86	87	82	1.60	256	255	56		2
	1655	999.566										

Comments/notes:

© 2016 TRC Environmental Corp.

TRC

Sheet 1 of 1

VISIBLE EMISSION EVALUATION

Facility: Elkhart Brass
Elkhart, IN

Date: 5/11/2016
Observer: Ricardo JUNEZ

Melt 1 stack
Run 1

Observation Began: 720
Ended: 820

Observation Point: Stack Exit

Distance From Source: 100 ft.
Source Height: 33 ft
Color of Emission: None
Background: Sky

Sky Condition: Cloudy

Sun Position: East
Temperature: 54°
Wind E At 6 MPH
Reading Conditions: Fair

General Comments:

Signature: Ricardo Juarez
Certification Date: 3/22/2016

	0	15	30	45	XX	XX	0	15	30	45	
720	0	0	0	0	0	30	0	0	0	0	750
721	0	0	0	0	1	31	0	0	0	0	751
722	0	0	0	0	2	32	0	0	0	0	752
723	0	0	0	0	3	33	0	0	0	0	753
724	0	0	0	0	4	34	0	0	0	0	754
725	0	0	0	0	5	35	0	0	0	0	755
726	0	0	0	0	6	36	0	0	0	0	756
727	0	0	0	0	7	37	0	0	0	0	757
728	0	0	0	0	8	38	0	0	0	0	758
729	0	0	0	0	9	39	0	0	0	0	759
730	0	0	0	0	10	40	0	0	0	0	800
731	0	0	0	0	11	41	0	0	0	0	801
732	0	0	0	0	12	42	0	0	0	0	802
733	0	0	0	0	13	43	0	0	0	0	803
734	0	0	0	0	14	44	0	0	0	0	804
735	0	0	0	0	15	45	0	0	0	0	805
736	0	0	0	0	16	46	0	0	0	0	806
737	0	0	0	0	17	47	0	0	0	0	807
738	0	0	0	0	18	48	0	0	0	0	808
739	0	0	0	0	19	49	0	0	0	0	809
740	0	0	0	0	20	50	0	0	0	0	810
741	0	0	0	0	21	51	0	0	0	0	811
742	0	0	0	0	22	52	0	0	0	0	812
743	0	0	0	0	23	53	0	0	0	0	813
744	0	0	0	0	24	54	0	0	0	0	814
745	0	0	0	0	25	55	0	0	0	0	815
746	0	0	0	0	26	56	0	0	0	0	816
747	0	0	0	0	27	57	0	0	0	0	817
748	0	0	0	0	28	58	0	0	0	0	818
749	0	0	0	0	29	59	0	0	0	0	819

Comments:

© 2013 TRC Environmental Corp.

AM-FDS-09 Rev. 1 Revised 06/18/13

TRC

Sheet 1 of 1

VISIBLE EMISSION EVALUATION

Facility: Elkhart Brass
Elkhart, IN

Date: 5/11/2016
Observer: Ricardo Nunez

Melt 2 Stack
Run 1

Observation Began: 720
Ended: 820

Observation Point: Stack Exit

Distance From Source: 100 ft.
Source Height: 33 ft
Color of Emission: None
Background: Sky

Sky Condition: Cloudy

Sun Position: East
Temperature: 54°
Wind E At 6 MPH
Reading Conditions: Fair

General Comments:

	0	15	30	45	XX	XX	0	15	30	45	
720	0	0	0	0	0	30	0	0	0	0	750
721	0	0	0	0	1	31	0	0	0	0	751
722	0	0	0	0	2	32	0	0	0	0	752
723	0	0	0	0	3	33	0	0	0	0	753
724	0	0	0	0	4	34	0	0	0	0	754
725	0	0	0	0	5	35	0	0	0	0	755
726	0	0	0	0	6	36	0	0	0	0	756
727	0	0	0	0	7	37	0	0	0	0	757
728	0	0	0	0	8	38	0	0	0	0	758
729	0	0	0	0	9	39	0	0	0	0	759
730	0	0	0	0	10	40	0	0	0	0	800
731	0	0	0	0	11	41	0	0	0	0	801
732	0	0	0	0	12	42	0	0	0	0	802
733	0	0	0	0	13	43	0	0	0	0	803
734	0	0	0	0	14	44	0	0	0	0	804
735	0	0	0	0	15	45	0	0	0	0	805
736	0	0	0	0	16	46	0	0	0	0	806
737	0	0	0	0	17	47	0	0	0	0	807
738	0	0	0	0	18	48	0	0	0	0	808
739	0	0	0	0	19	49	0	0	0	0	809
740	0	0	0	0	20	50	0	0	0	0	810
741	0	0	0	0	21	51	0	0	0	0	811
742	0	0	0	0	22	52	0	0	0	0	812
743	0	0	0	0	23	53	0	0	0	0	813
744	0	0	0	0	24	54	0	0	0	0	814
745	0	0	0	0	25	55	0	0	0	0	815
746	0	0	0	0	26	56	0	0	0	0	816
747	0	0	0	0	27	57	0	0	0	0	817
748	0	0	0	0	28	58	0	0	0	0	818
749	0	0	0	0	29	59	0	0	0	0	819

Signature: Ricardo Nunez

Certification Date: 3/22/2016

Comments:

© 2013 TRC Environmental Corp.

AM-FDS-09 Rev. 1 Revised 06/18/13

TRC

Visible Emissions Wind and Sun Chart

USEPA Method 9

COMMENTS: _____

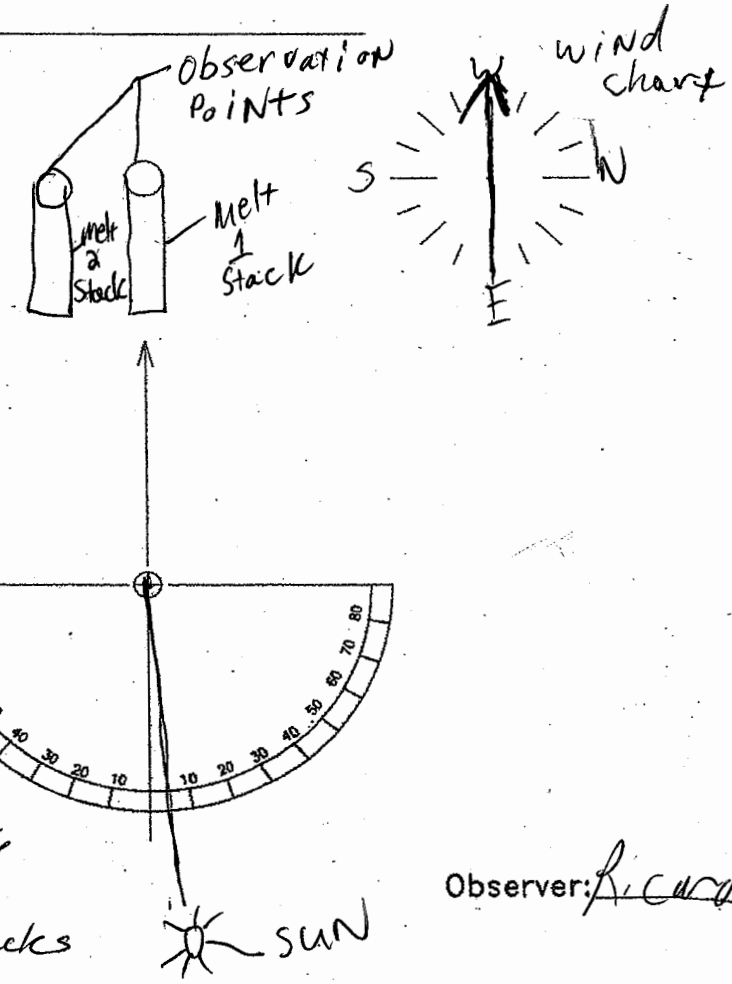

Date: 5/11/2016
Site: Elkhart Brass
Elkhart, IN
Melt 1 & 2 Stacks
Run 1

Observer: Ricardo Munoz

EPA Reference Method 9

AM-FDS-13 Rev. 1 – Revised 06/18/13

TRC

Sheet 1 of 1

VISIBLE EMISSION EVALUATION

Facility: Elkhart Brass
Elkhart, IN

Date: 5/11/2016
Observer: Ricardo Nunez

Melt 2 Stack
Run 2

Observation Began: 1130
Ended: 1230

Observation Point: Stack Exit

Distance From Source: 100 ft.
Source Height: 33
Color of Emission: None
Background: Sky

Sky Condition: Cloudy

Sun Position: South East
Temperature: 63
Wind E At 3 MPH
Reading Conditions: Fair

General Comments:

Signature: R Cardoty
Certification Date: 3/22/2016

	0	15	30	45	XX	XX	0	15	30	45	
1130	0	0	0	0	0	30	0	0	0	0	1200
1131	0	0	0	0	1	31	0	0	0	0	1201
1132	0	0	0	0	2	32	0	0	0	0	1202
1133	0	0	0	0	3	33	0	0	0	0	1203
1134	0	0	0	0	4	34	0	0	0	0	1204
1135	0	0	0	0	5	35	0	0	0	0	1205
1136	0	0	0	0	6	36	0	0	0	0	1206
1137	0	0	0	0	7	37	0	0	0	0	1207
1138	0	0	0	0	8	38	0	0	0	0	1208
1139	0	0	0	0	9	39	0	0	0	0	1209
1140	0	0	0	0	10	40	0	0	0	0	1210
1141	0	0	0	0	11	41	0	0	0	0	1211
1142	0	0	0	0	12	42	0	0	0	0	1212
1143	0	0	0	0	13	43	0	0	0	0	1213
1144	0	0	0	0	14	44	0	0	0	0	1214
1145	0	0	0	0	15	45	0	0	0	0	1215
1146	0	0	0	0	16	46	0	0	0	0	1216
1147	0	0	0	0	17	47	0	0	0	0	1217
1148	0	0	0	0	18	48	0	0	0	0	1218
1149	0	0	0	0	19	49	0	0	0	0	1219
1150	0	0	0	0	20	50	0	0	0	0	1220
1151	0	0	0	0	21	51	0	0	0	0	1221
1152	0	0	0	0	22	52	0	0	0	0	1222
1153	0	0	0	0	23	53	0	0	0	0	1223
1154	0	0	0	0	24	54	0	0	0	0	1224
1155	0	0	0	0	25	55	0	0	0	0	1225
1156	0	0	0	0	26	56	0	0	0	0	1226
1157	0	0	0	0	27	57	0	0	0	0	1227
1158	0	0	0	0	28	58	0	0	0	0	1228
1159	0	0	0	0	29	59	0	0	0	0	1229

Comments:

© 2013 TRC Environmental Corp.

AM-FDS-09 Rev. 1 Revised 06/18/13

TRC

Sheet 1 of 1

VISIBLE EMISSION EVALUATION

Facility: Elkhart Brass
Elkhart, IN

Date: 5/11/2016
Observer: Ricardo NUNEZ

Melt 2 Stack
Run 2

Observation Began: 1130
Ended: 1230

Observation Point: Stack Exit

Distance From Source: 160 ft.
Source Height: 33
Color of Emission: None
Background: Sky

Sky Condition: Cloudy

Sun Position: SouthEast
Temperature: 63°
Wind E At 3 MPH
Reading Conditions: Fair

General Comments:

Signature: Ricardo Nunez

Certification Date: 3/22/2016

	0	15	30	45	XX	XX	0	15	30	45	
1130	0	0	0	0	0	30	0	0	0	0	1200
1131	0	0	0	0	1	31	0	0	0	0	1201
1132	0	0	0	0	2	32	0	0	0	0	1202
1133	0	0	0	0	3	33	0	0	0	0	1203
1134	0	0	0	0	4	34	0	0	0	0	1204
1135	0	0	0	0	5	35	0	0	0	0	1205
1136	0	0	0	0	6	36	0	0	0	0	1206
1137	0	0	0	0	7	37	0	0	0	0	1207
1138	0	0	0	0	8	38	0	0	0	0	1208
1139	0	0	0	0	9	39	0	0	0	0	1209
1140	0	0	0	0	10	40	0	0	0	0	1210
1141	0	0	0	0	11	41	0	0	0	0	1211
1142	0	0	0	0	12	42	0	0	0	0	1212
1143	0	0	0	0	13	43	0	0	0	0	1213
1144	0	0	0	0	14	44	0	0	0	0	1214
1145	0	0	0	0	15	45	0	0	0	0	1215
1146	0	0	0	0	16	46	0	0	0	0	1216
1147	0	0	0	0	17	47	0	0	0	0	1217
1148	0	0	0	0	18	48	0	0	0	0	1218
1149	0	0	0	0	19	49	0	0	0	0	1219
1150	0	0	0	0	20	50	0	0	0	0	1220
1151	0	0	0	0	21	51	0	0	0	0	1221
1152	0	0	0	0	22	52	0	0	0	0	1222
1153	0	0	0	0	23	53	0	0	0	0	1223
1154	0	0	0	0	24	54	0	0	0	0	1224
1155	0	0	0	0	25	55	0	0	0	0	1225
1156	0	0	0	0	26	56	0	0	0	0	1226
1157	0	0	0	0	27	57	0	0	0	0	1227
1158	0	0	0	0	28	58	0	0	0	0	1228
1159	0	0	0	0	29	59	0	0	0	0	1229

Comments:

© 2013 TRC Environmental Corp.

AM-FDS-09 Rev. 1 Revised 06/18/13

TRC

Visible Emissions Wind and Sun Chart

USEPA Method 9

COMMENTS: _____

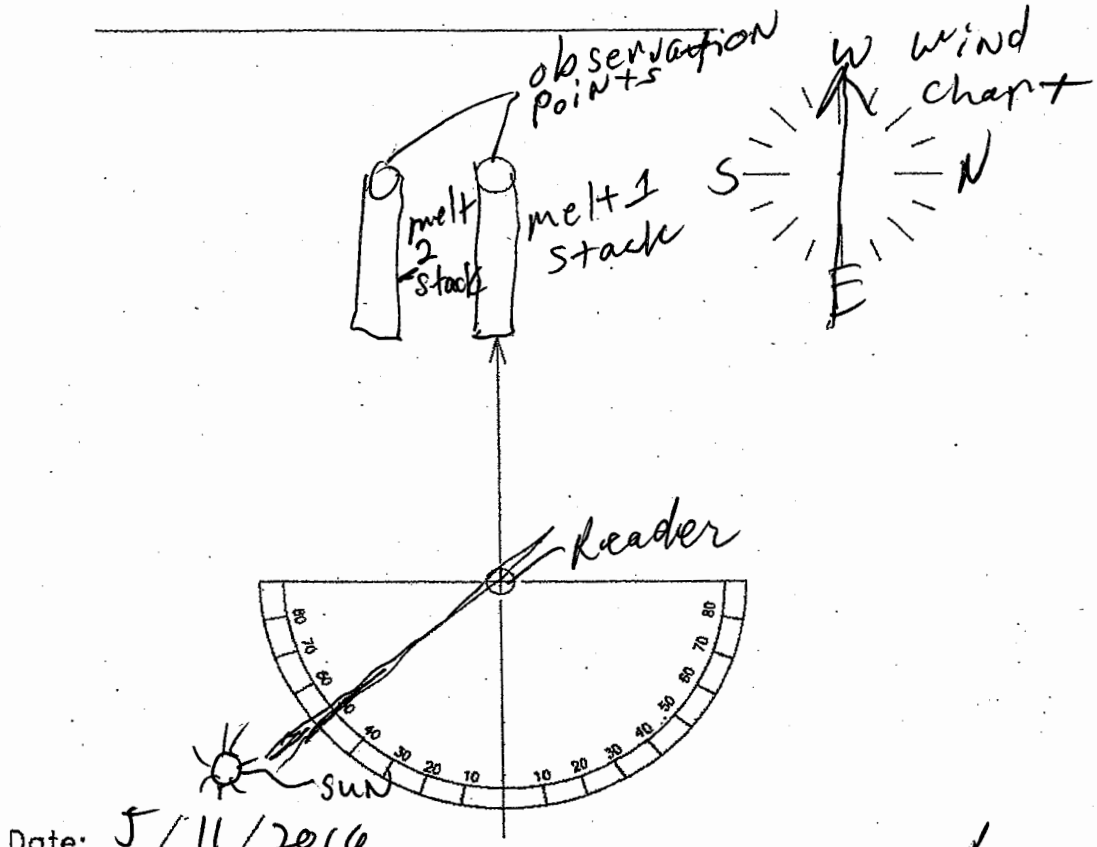

Date: 5/11/2016
Site: ~~Elkhart Brass~~
Elkhart, IN
Melt 1 & 2 stacks
Run 2

Observer: Ricardo Nunez

EPA Reference Method 9

AM-FDS-13 Rev. 1 – Revised 06/18/13

TRC

Sheet 1 of 1

VISIBLE EMISSION EVALUATION

Facility: Elkhart Brass
Elkhart, IN

Date: 5/11/2016
Observer: Ricardo Nunez

melt 1 Stack
Run 3

Observation Began: 1440
Ended: 1540

Observation Point: stack Exit

Distance From Source: 100 ft.
Source Height: 33
Color of Emission: None
Background: Sky

Sky Condition: Cloudy

Sun Position: Southwest
Temperature: 65°
Wind ENE At 9 MPH
Reading Conditions: Fair

General Comments:

	0	15	30	45	XX	XX	0	15	30	45	
1440	0	0	0	0	0	30	0	0	0	0	1510
1441	0	0	0	0	1	31	0	0	0	0	1511
1442	0	0	0	0	2	32	0	0	0	0	1512
1443	0	0	0	0	3	33	0	0	0	0	1513
1444	0	0	0	0	4	34	0	0	0	0	1514
1445	0	0	0	0	5	35	0	0	0	0	1515
1446	0	0	0	0	6	36	0	0	0	0	1516
1447	0	0	0	0	7	37	0	0	0	0	1517
1448	0	0	0	0	8	38	0	0	0	0	1518
1449	0	0	0	0	9	39	0	0	0	0	1519
1450	0	0	0	0	10	40	0	0	0	0	1520
1451	0	0	0	0	11	41	0	0	0	0	1521
1452	0	0	0	0	12	42	0	0	0	0	1522
1453	0	0	0	0	13	43	0	0	0	0	1523
1454	0	0	0	0	14	44	0	0	0	0	1524
1455	0	0	0	0	15	45	0	0	0	0	1525
1456	0	0	0	0	16	46	0	0	0	0	1526
1457	0	0	0	0	17	47	0	0	0	0	1527
1458	0	0	0	0	18	48	0	0	0	0	1528
1459	0	0	0	0	19	49	0	0	0	0	1529
1500	0	0	0	0	20	50	0	0	0	0	1530
1501	0	0	0	0	21	51	0	0	0	0	1531
1502	0	0	0	0	22	52	0	0	0	0	1532
1503	0	0	0	0	23	53	0	0	0	0	1533
1504	0	0	0	0	24	54	0	0	0	0	1534
1505	0	0	0	0	25	55	0	0	0	0	1535
1506	0	0	0	0	26	56	0	0	0	0	1536
1507	0	0	0	0	27	57	0	0	0	0	1537
1508	0	0	0	0	28	58	0	0	0	0	1538
1509	0	0	0	0	29	59	0	0	0	0	1539

Signature: Ricardo Nunez

Certification Date: 3/22/2016

Comments:

© 2013 TRC Environmental Corp.

AM-FDS-09 Rev. 1 Revised 06/18/13

TRC

Sheet 1 of 1

VISIBLE EMISSION EVALUATION

Facility: Elkhart Brass
Elkhart, IN

Date: 5/11/2016
Observer: Ricardo NUNEZ

Melt 2 Stack
Run 3

Observation Began: 1440
Ended: 1540

Observation Point: Stack Exit

Distance From Source: 100 ft.
Source Height: 33
Color of Emission: None
Background: Sky

Sky Condition: Cloudy

Sun Position: Southwest
Temperature: 65°
Wind ENE At 9 MPH
Reading Conditions: Fair

General Comments:

Signature: Ricardo Nunez
Certification Date: 3/22/2016

	0	15	30	45	XX	XX	0	15	30	45	
1440	0	0	0	0	0	30	0	0	0	0	1510
1441	0	0	0	0	1	31	0	0	0	0	1511
1442	0	0	0	0	2	32	0	0	0	0	1512
1443	0	0	0	0	3	33	0	0	0	0	1513
1444	0	0	0	0	4	34	0	0	0	0	1514
1445	0	0	0	0	5	35	0	0	0	0	1515
1446	0	0	0	0	6	36	0	0	0	0	1516
1447	0	0	0	0	7	37	0	0	0	0	1517
1448	0	0	0	0	8	38	0	0	0	0	1518
1449	0	0	0	0	9	39	0	0	0	0	1519
1450	0	0	0	0	10	40	0	0	0	0	1520
1451	0	0	0	0	11	41	0	0	0	0	1521
1452	0	0	0	0	12	42	0	0	0	0	1522
1453	0	0	0	0	13	43	0	0	0	0	1523
1454	0	0	0	0	14	44	0	0	0	0	1524
1455	0	0	0	0	15	45	0	0	0	0	1525
1456	0	0	0	0	16	46	0	0	0	0	1526
1457	0	0	0	0	17	47	0	0	0	0	1527
1458	0	0	0	0	18	48	0	0	0	0	1528
1459	0	0	0	0	19	49	0	0	0	0	1529
1500	0	0	0	0	20	50	0	0	0	0	1530
1501	0	0	0	0	21	51	0	0	0	0	1531
1502	0	0	0	0	22	52	0	0	0	0	1532
1503	0	0	0	0	23	53	0	0	0	0	1533
1504	0	0	0	0	24	54	0	0	0	0	1534
1505	0	0	0	0	25	55	0	0	0	0	1535
1506	0	0	0	0	26	56	0	0	0	0	1536
1507	0	0	0	0	27	57	0	0	0	0	1537
1508	0	0	0	0	28	58	0	0	0	0	1538
1509	0	0	0	0	29	59	0	0	0	0	1539

Comments:

© 2013 TRC Environmental Corp.

AM-FDS-09 Rev. 1 Revised 06/18/13

TRC

Visible Emissions Wind and Sun Chart

USEPA Method 9

COMMENTS: _____

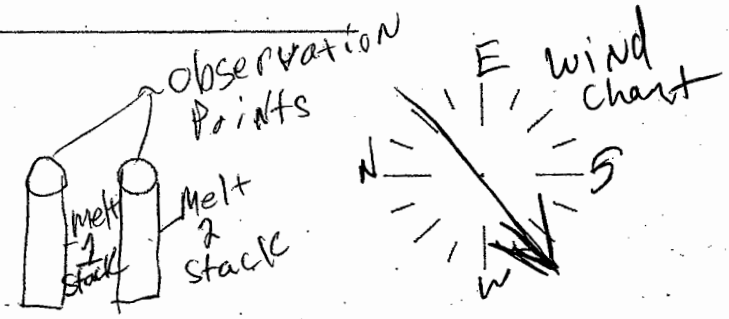

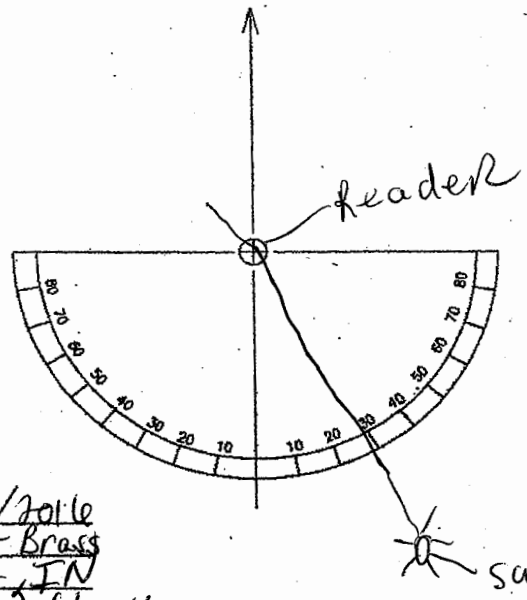

Date: 5/11/2016
Site: Elkhart Brass
Elkhart, IN
Melt 1 & 2 Stack
Run 3

Observer: Ricardo Nunez

EPA Reference Method 9

AM-FDS-13 Rev. 1 – Revised 06/18/13

TRC

Sheet 1 of 1

VISIBLE EMISSION EVALUATION

Facility: Elkhart Brass
Elkhart, IN

Date: 5/11/2016
Observer: Ricardo Nunez

Tap Stack
Run 1

Observation Began: 930
Ended: 1030

Observation Point: Stack Exit

Distance From Source: 100 ft.
Source Height: 30ft
Color of Emission: None
Background: Sky

Sky Condition: Cloudy

Sun Position: East
Temperature: 54°
Wind E At 5 MPH
Reading Conditions: Fair

General Comments:

Signature: Ricardo Nunez
Certification Date: 3/22/2016

	0	15	30	45	XX	XX	0	15	30	45	
930	0	0	0	0	0	30	0	0	0	0	1000
931	0	0	0	0	1	31	0	0	0	0	1001
932	0	0	0	0	2	32	0	0	0	0	1002
933	0	0	0	0	3	33	0	0	0	0	1003
934	0	0	0	0	4	34	0	0	0	0	1004
935	0	0	0	0	5	35	0	0	0	0	1005
936	0	0	0	0	6	36	0	0	0	0	1006
937	0	0	0	0	7	37	0	0	0	0	1007
938	0	0	0	0	8	38	0	0	0	0	1008
939	0	0	0	0	9	39	0	0	0	0	1009
940	0	0	0	0	10	40	0	0	0	0	1010
941	0	0	0	0	11	41	0	0	0	0	1011
942	0	0	0	0	12	42	0	0	0	0	1012
943	0	0	0	0	13	43	0	0	0	0	1013
944	0	0	0	0	14	44	0	0	0	0	1014
945	0	0	0	0	15	45	0	0	0	0	1015
946	0	0	0	0	16	46	0	0	0	0	1016
947	0	0	0	0	17	47	0	0	0	0	1017
948	0	0	0	0	18	48	0	0	0	0	1018
949	0	0	0	0	19	49	0	0	0	0	1019
950	0	0	0	0	20	50	0	0	0	0	1020
951	0	0	0	0	21	51	0	0	0	0	1021
952	0	0	0	0	22	52	0	0	0	0	1022
953	0	0	0	0	23	53	0	0	0	0	1023
954	0	0	0	0	24	54	0	0	0	0	1024
955	0	0	0	0	25	55	0	0	0	0	1025
956	0	0	0	0	26	56	0	0	0	0	1026
957	0	0	0	0	27	57	0	0	0	0	1027
958	0	0	0	0	28	58	0	0	0	0	1028
959	0	0	0	0	29	59	0	0	0	0	1029

Comments:

© 2013 TRC Environmental Corp.

AM-FDS-09 Rev. 1 Revised 06/18/13

TRC

Visible Emissions Wind and Sun Chart

USEPA Method 9

COMMENTS: _____

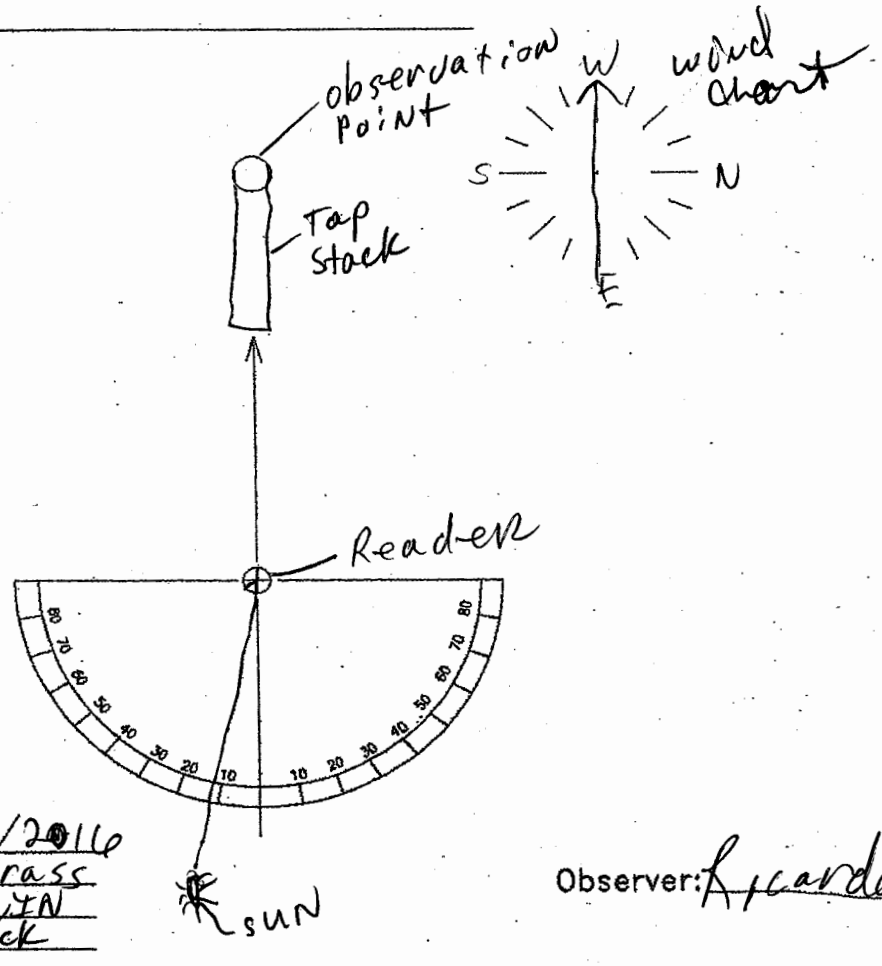

Date: 5/11/2016
Site: Elkhart Brass
Elkhart, IN
Tap Stack

Observer: Ricardo Nunez

EPA Reference Method 9

AM-FDS-13 Rev. 1 – Revised 06/18/13

TRC

Sheet 1 of 1

VISIBLE EMISSION EVALUATION

Facility: Elkhart Brass
Elkhart, IN

Date: 5/11/2016
Observer: Ricardo Nunez

Tap Stack
Run 2

Observation Began: 1240
Ended: 1340

Observation Point: Stack Exit

Distance From Source: 100 ft.
Source Height: 30
Color of Emission: None
Background: Sky

Sky Condition: Cloudy

Sun Position: South East
Temperature: 65
Wind E At 4 MPH
Reading Conditions: Fair

General Comments:

	0	15	30	45	XX	XX	0	15	30	45	
1240	0	0	0	0	0	30	0	0	0	0	1310
1241	0	0	0	0	1	31	0	0	0	0	1311
1242	0	0	0	0	2	32	0	0	0	0	1312
1243	0	0	0	0	3	33	0	0	0	0	1313
1244	0	0	0	0	4	34	0	0	0	0	1314
1245	0	0	0	0	5	35	0	0	0	0	1315
1246	0	0	0	0	6	36	0	0	0	0	1316
1247	0	0	0	0	7	37	0	0	0	0	1317
1248	0	0	0	0	8	38	0	0	0	0	1318
1249	0	0	0	0	9	39	0	0	0	0	1319
1250	0	0	0	0	10	40	0	0	0	0	1320
1251	0	0	0	0	11	41	0	0	0	0	1321
1252	0	0	0	0	12	42	0	0	0	0	1322
1253	0	0	0	0	13	43	0	0	0	0	1323
1254	0	0	0	0	14	44	0	0	0	0	1324
1255	0	0	0	0	15	45	0	0	0	0	1325
1256	0	0	0	0	16	46	0	0	0	0	1326
1257	0	0	0	0	17	47	0	0	0	0	1327
1258	0	0	0	0	18	48	0	0	0	0	1328
1259	0	0	0	0	19	49	0	0	0	0	1329
1300	0	0	0	0	20	50	0	0	0	0	1330
1301	0	0	0	0	21	51	0	0	0	0	1331
1302	0	0	0	0	22	52	0	0	0	0	1332
1303	0	0	0	0	23	53	0	0	0	0	1333
1304	0	0	0	0	24	54	0	0	0	0	1334
1305	0	0	0	0	25	55	0	0	0	0	1335
1306	0	0	0	0	26	56	0	0	0	0	1336
1307	0	0	0	0	27	57	0	0	0	0	1337
1308	0	0	0	0	28	58	0	0	0	0	1338
1309	0	0	0	0	29	59	0	0	0	0	1339

Signature: Ricardo Nunez

Certification Date: 3/22/2016

Comments:

© 2013 TRC Environmental Corp.

AM-FDS-09 Rev. 1 Revised 06/18/13

TRC

Visible Emissions Wind and Sun Chart

USEPA Method 9

COMMENTS: _____

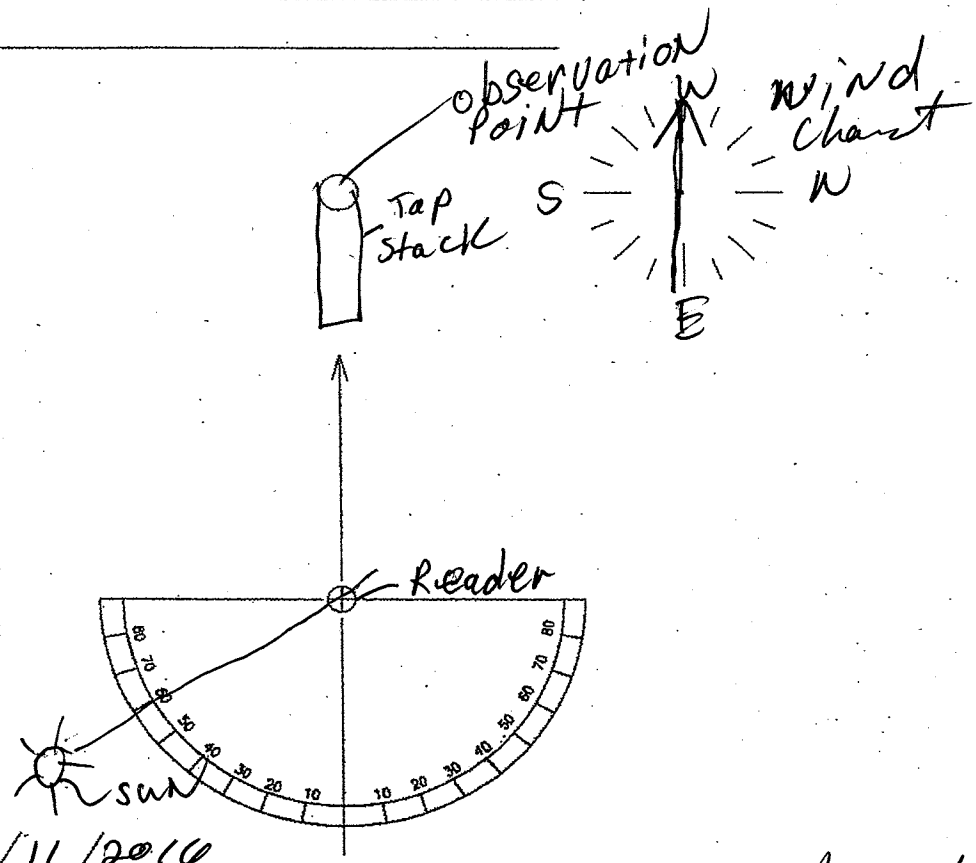

Date: 5/11/2016
Site: Elkhart Brass
Elkhart, IN
Tap Stack
Run 2

Observer: Ricardo NUNEZ

EPA Reference Method 9

AM-FDS-13 Rev. 1 – Revised 06/18/13

TRC

Sheet 1 of 1

VISIBLE EMISSION EVALUATION

Facility: Elkhart Brass
Elkhart, IN

Top Stack
Run 3

Date: 5/11/2016
Observer: Ricardo Nunez

Observation Began: 1555
Ended: 1655

Observation Point: Stack Exit

Distance From Source: 100 ft.
Source Height: 30 ft
Color of Emission: None
Background: Sky

Sky Condition: Cloudy

Sun Position: South West
Temperature: 64°
Wind ENE At 9 MPH
Reading Conditions: Fair

General Comments:

Signature: Ricardo Nunez
Certification Date: 3/22/2014

	0	15	30	45	XX	XX	0	15	30	45	
1555	0	0	0	0	0	30	0	0	0	0	1625
1556	0	0	0	0	1	31	0	0	0	0	1626
1557	0	0	0	0	2	32	0	0	0	0	1627
1558	0	0	0	0	3	33	0	0	0	0	1628
1559	0	0	0	0	4	34	0	0	0	0	1629
1600	0	0	0	0	5	35	0	0	0	0	1630
1601	0	0	0	0	6	36	0	0	0	0	1631
1602	0	0	0	0	7	37	0	0	0	0	1632
1603	0	0	0	0	8	38	0	0	0	0	1633
1604	0	0	0	0	9	39	0	0	0	0	1634
1605	0	0	0	0	10	40	0	0	0	0	1635
1606	0	0	0	0	11	41	0	0	0	0	1636
1607	0	0	0	0	12	42	0	0	0	0	1637
1608	0	0	0	0	13	43	0	0	0	0	1638
1609	0	0	0	0	14	44	0	0	0	0	1639
1610	0	0	0	0	15	45	0	0	0	0	1640
1611	0	0	0	0	16	46	0	0	0	0	1641
1612	0	0	0	0	17	47	0	0	0	0	1642
1613	0	0	0	0	18	48	0	0	0	0	1643
1614	0	0	0	0	19	49	0	0	0	0	1644
1615	0	0	0	0	20	50	0	0	0	0	1645
1616	0	0	0	0	21	51	0	0	0	0	1646
1617	0	0	0	0	22	52	0	0	0	0	1647
1618	0	0	0	0	23	53	0	0	0	0	1648
1619	0	0	0	0	24	54	0	0	0	0	1649
1620	0	0	0	0	25	55	0	0	0	0	1650
1621	0	0	0	0	26	56	0	0	0	0	1651
1622	0	0	0	0	27	57	0	0	0	0	1652
1623	0	0	0	0	28	58	0	0	0	0	1653
1624	0	0	0	0	29	59	0	0	0	0	1654

Comments:

© 2013 TRC Environmental Corp.

AM-FDS-09 Rev. 1 Revised 06/18/13

TRC

Visible Emissions Wind and Sun Chart

USEPA Method 9

COMMENTS: _____

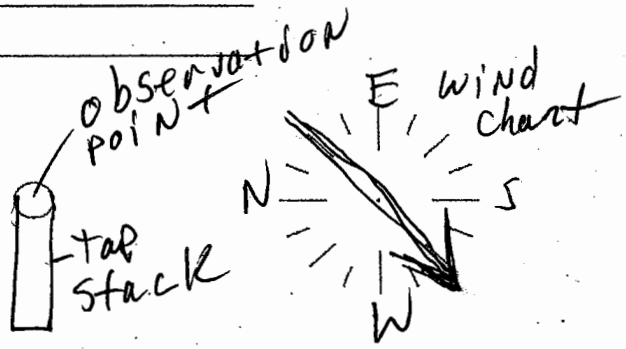

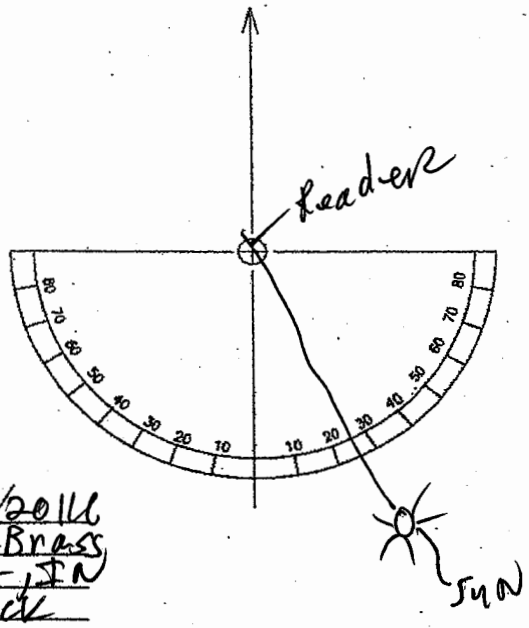

Date: 5/11/2016
Site: ~~Elkhart Brass~~
~~Elkhart, IN~~
~~Top Stack~~
Run 3

Observer: Ricardo Nunez

EPA Reference Method 9

AM-FDS-13 Rev. 1 – Revised 06/18/13

EMISSION COMPLIANCE TEST PROTOCOL

Prepared For
Elkhart Brass Manufacturing Company, Inc.

At The
Elkhart Foundry
Induction Melt Furnaces (EU29, EU30, and EU31)
Elkhart, Indiana

TRC ENVIRONMENTAL CORPORATION Protocol 253282
Revision 1

May 2, 2016

Submitted By

Mr. Paul Coleman
Project Manager
312-533-2023, Phone
pcoleman@trcsolutions.com, Email

TRC Environmental Corporation
7521 Brush Hill Road
Burr Ridge, IL 60527 T (312) 533-2042
USA F (312) 533-2070

TABLE OF CONTENTS

1.0 INTRODUCTION 1
1.1 Project Contact Information 1
2.0 FACILITY AND PROCESS DESCRIPTION 1
2.1 PROCESS DATA 1
3.0 TEST REQUIREMENTS 2
4.0 SPECIFIC TEST PROCEDURES 2
5.0 TEST PROGRAM SCHEDULE 3
6.0 PROJECT PERSONNEL AND RESPONSIBILITIES 3
7.0 PLANT REQUIREMENTS 4
8.0 TEST PROCEDURES 4
8.1 Determination of Sample Point Locations by USEPA Method 1 4
8.2 Volumetric Flow Rate Determination by USEPA Method 2 5
8.3 CO_2 and O_2 Determination by USEPA Method 3 5
8.4 Filterable PM Determination by USEPA Method 5 5
8.5 Visible Emissions Determination by USEPA Method 9 5
8.6 Lead Determination by USEPA Method 12 5
9.0 QUALITY ASSURANCE PROCEDURES 6

GENERAL INFORMATION APPENDED:

C83600 Certificate of Analysis
Sample Point Location Information
Test Train Diagrams
Data Sheets
Sample Analysis Sheets
Calculation and Nomenclature Sheets
Emission Rate Calculations
Calibration Data

© 2016, TRC Environmental Corporation, all rights reserved. The contents of this document are the property of TRC Environmental Corporation (TRC). No part of this work may be reproduced or transmitted in any form or by any means, except as permitted in written license agreement with TRC. TRC has made every reasonable attempt to ensure the completeness and accuracy of this document. The TRC logo is a registered trademark of TRC.
TRC Protocol Compliance template revised 02/03/15

1.0 INTRODUCTION

On September 17, 2015 Elkhart Brass Manufacturing Company, Inc. (Elkhart Brass) received a Request to Provide Information Pursuant to the Clean Air Act (Request) from the United States Environmental Protection Agency Region 5 (USEPA). In response to Appendix B of that request, TRC Environmental Corporation (TRC) will perform for Elkhart Brass an emission compliance test program to determine filterable Particulate Matter (PM), Lead (Pb) and Visible Emissions (VE) on the exhaust stacks associated with the Induction Melt Furnaces (EU29, EU30, and EU31). Testing will occur at the Elkhart Brass foundry in Elkhart, Indiana. This program will be completed in accordance with the methods and at the source sampling locations listed below. All required analyses, including any quality assurance samples, will be completed.

1.1 Project Contact Information

Location	Address	Contact
Test Facility	Elkhart Brass Manufacturing Company, Inc. Elkhart Foundry 1302 West Beardsley Ave. Elkhart, Indiana 46514	Mr. Dennis Grenier Foundry Manager 574-970-7666 (phone) 574-274-8950 (cell) dgrenier@elkhartbrass.com
Company Representatives	TRC Environmental Corporation 2025 Beltline Ave. SE Suite 402 Grand Rapids, MI 49546	Mr. Ben Lemley, PE Project Engineer 201-636-5885 (phone) 616-975-1098 (fax) blemley@trcsolutions.com
	TRC Environmental Corporation 7521 Brush Hill Road Burr Ridge, IL 60527	Mr. Paul Coleman Project Manager 312-533-2023 (phone) 312-533-2070 (fax) pcoleman@trcsolutions.com

2.0 FACILITY AND PROCESS DESCRIPTION

Elkhart Brass operates a brass and aluminum firefighting equipment manufacturing source located at 1302 West Beardsley Avenue, Elkhart, Indiana. The source operates under Significant Permit Revision No. M039-30851-00072 to Minor Source Operating Permit (MSOP) No. 039-22655-0072 issued by the Indiana Department of Environmental Management (IDEM) on January 4, 2012. Elkhart plans to conduct lead, filterable particulate matter and opacity testing simultaneously on the three (3) exhaust stacks associated with the three Induction Melt Furnaces (EU29, EU30, and EU31).

2.1 PROCESS DATA

Appendix B of the Request states that testing should be conducted while operating the melt furnaces at maximum production rates identified as a minimum of 95% of the capacity of the unit. Per Section D.4(e) of the MSOP Elkhart is permitted to operate three induction melt furnaces (EU29, EU30, and EU31) with a capacity of 2.25 tons per hour each. However, Elkhart generally operates only two of the furnaces at any one time due to limited electrical availability. Further, the maximum operating capability of the furnaces as currently installed, accounting for use of the alloy with the worst case lead

content, is estimated to be 1.5 tons per hour. During the test Elkhart plans to operate the melt and mold lines such that the furnaces will not be idle at any point and molds will be available to be poured at all times. Elkhart has not attempted to operate the process in this fashion before but are doing so to provide a worst case operating scenario. Therefore, during the testing period Elkhart plans to operate two furnaces at or near this 1.5 tons per hour maximum rate and leave the third furnace idle. This configuration and melt composition will result in the maximum combined production rate for the melt operation of near 3.0 tons per hour.

Note that the maximum of 1.5 tons per hour per furnace is specific to melting operations including the maximum lead alloy usage. Elkhart may be capable of operating at a greater metal throughput while utilizing an alloy with different properties than the proposed alloy. However, as discussed below Elkhart has selected the proposed alloy to demonstrate a worst case lead emissions condition for the test.

Elkhart plans to use alloy C83600 during the testing. In the last 12 months this ingot was used to produce the highest lead emission rates due to both the number of castings produced and the lead content of the alloy. The specifications of C83600 are included in the Appendix.

The following process operation data will be collected:

- process time and mass of brass and aluminum charged
- brass lead content

3.0 TEST REQUIREMENTS

The table below presents the test methods, as well as the number and duration of each at each test location:

Unit ID/ Sample Location	Emission Point	Parameter Measured	Test Method	No. of Runs	Run Duration (min)
Induction Melt Furnaces (EU29, EU30, and EU31)	Melt 1 Stack, Melt 2 Stack, Tap Hood Stack (sampled simultaneously)	Filerable PM	USEPA 1, 2, 3, and 5, 40CFR60, Appendix A	3	120
		Lead (Pb)	USEPA 12, 40CFR60, Appendix A	3	120
		Visible Emissions	USEPA 9, 40CFR60, Appendix A	3	60

4.0 SPECIFIC TEST PROCEDURES

Detailed test procedures are described in Section 8 of this protocol. Three complete test runs will be performed for each constituent in accordance with the following USEPA methods.

1. Volumetric flow will be determined utilizing USEPA Methods 1 and 2, 40CFR60 in conjunction with each emission test run. The location of the ports in relation to upstream and downstream disturbances will be measured and recorded.

2. A check for the presence or absence of cyclonic flow will be performed in accordance with Section 11.4 of Method 1 and recorded on the data sheet appended.

3. O_2 and CO_2 content of the stack gas will be determined by USEPA Method 3, 40CFR60 during each test run.

4. Filterable particulate emission test runs will be completed in accordance with USEPA 5, 40CFR60. Each test run will be a minimum of 120 minutes in length, during which the volume sampled will be a minimum of 60 DSCF. A glass or stainless steel-lined probe will be utilized.

5. Opacity tests will be completed in accordance with USEPA Method 9 during each particulate test run.

6. Lead concentrations will be determined in accordance with the USEPA Method 12, 40CFR60. Each test run will be a minimum of 120 minutes in length, during which a minimum of 60 DSCF will be sampled. A glass-lined probe will be utilized. A lead audit sample will also be procured and analyzed.

5.0 TEST PROGRAM SCHEDULE

Date	Task	On-Site Hours
May 9, 2016	Crew travels to Elkhart.	---
May 10, 2016	Crew sets up all three (3) sampling locations to perform both PM and Pb sampling simultaneously at each of the stacks.	8
May 11, 2016	Perform PM, VE and Pb sampling on all three (3) sources simultaneously. Pack equipment if time allows.	11
May 12, 2016	Pack equipment, if necessary. Return travel to TRC office	4

All test days are considered consecutive 8-hour weekdays, generally scheduled between the hours of 8:00 a.m. and 4:30 p.m., unless otherwise stated.

6.0 PROJECT PERSONNEL AND RESPONSIBILITIES

1 Field Team Leader:
Coordinates all test activities. Maintains communications between all test participants and plant personnel.

9 Technical Support:
Prepares and operates the test train. Ensures all field calculations are completed. Records data. Assists in sample recovery as required.

7.0 PLANT REQUIREMENTS

TRC must be supplied with the following items in order to complete this test program:

1. Safe access to test positions.
2. Electrical power 110 V, 30 A, 60 cycle service at the test locations.
3. Six-inch test ports cleaned and loose prior to arrival of test crew.
4. Any scaffolding or aerial man-lifts required to reach the test locations. Scaffolding shall be erected by a qualified person and must meet minimum OSHA standards as listed in 29 CFR 1926.451.
5. Sufficient lighting at the test site.
6. Elevators safety checked and certified in good operation.
7. Hoist equipment, if required.
8. Plant or pollution control equipment operating data, in the format required by the applicable regulatory agency, for inclusion in the report.
9. Washroom facilities for use by members of the test crew.
10. A shelter at the test location, if weather conditions warrant.
11. Stable operations and the required load or production rate during the test period.
12. Communication between the test location and the control room.
13. Parking location to place TRC mobile trailer within 200 feet of sampling locations with access to multiple 110 V, 20 A, 60 cycle and one (1) 480 V, 50 A, 60 cycle circuit.
14. Proper disposal of any hazardous waste resulting from test methods being performed on-site.

8.0 TEST PROCEDURES

All testing, sampling, analytical, and calibration procedures used for this test program will be performed in accordance with the methods presented in the following sections. Where applicable, the Quality Assurance Handbook for Air Pollution Measurement Systems, Volume III, Stationary Source Specific Methods, USEPA 600/R-94/038c, September 1994 is used to supplement procedures.

8.1 Determination of Sample Point Locations by USEPA Method 1

This method is applicable to gas streams flowing in ducts, stacks, and flues. It is designed to aid in the representative measurement of pollutant emissions and/or total volumetric flow rates from stationary sources. In order to qualify as an acceptable sample location, it must be located at a position at least two stack or duct equivalent diameters downstream and a half equivalent diameter upstream from any flow disturbance. The location of the ports in relation to upstream and downstream disturbances will be measured and recorded

The cross-section of the measurement site is divided into a number of equal areas, and the traverse points are then located in the center of these areas. The minimum number of points are determined from Figure 1-1 (particulate) of USEPA Method 1.

Prior to performing volumetric flow traverses, a check for the presence or absence of cyclonic flow will be performed in accordance with Section 11.4 of Method 1 and recorded on the data sheet enclosed.

8.2 Volumetric Flow Rate Determination by USEPA Method 2

This method is applicable for the determination of the average velocity and the volumetric flow rate of a gas stream.

The gas velocity head (ΔP) and temperature is measured at traverse points defined by USEPA Method 1. The velocity head is measured with a Type S (Stausscheibe or reverse type) pitot tube and oil-filled manometer; the gas temperature is measured with a Type K thermocouple. The average gas velocity in the flue is calculated based on: the gas density (as determined by USEPA Methods 3 and 4), the flue gas pressure, the average of the square roots of the velocity heads at each traverse point, and the average flue gas temperature.

8.3 CO_2 and O_2 Determination by USEPA Method 3

This method is applicable for the determination of CO_2 and O_2 concentrations and dry molecular weight of a sample from an effluent gas stream of a fossil-fuel combustion process or other process.

A gas sample is extracted from each stack by single-point grab sampling, and analyzed for percent CO_2 and percent O_2 using a Fyrite gas analyzer.

8.4 Filterable PM Determination by USEPA Method 5

This method is applicable for the determination of particulate matter (PM) emissions from stationary sources. USEPA Methods 2-4 are performed concurrently with, and as an integral part, of these determinations.

Flue gas is withdrawn isokinetically from the source at traverse points determined per USEPA Method 1, and PM is collected in the nozzle, probe liner, and on a glass fiber filter. The probe liner and filter are maintained at a temperature of 120 ± 14°C (248 ± 25°F) or such other temperature as specified by an applicable subpart of the standards, or as approved by the Administrator for a particular application. The PM mass, which includes any material that condenses at or above the filtration temperature, is determined gravimetrically after the removal of uncombined water.

8.5 Visible Emissions Determination by USEPA Method 9

This method is applicable for the determination of the opacity of emissions from stationary sources pursuant to § 60.11(b) and for visually determining opacity of emissions.

Opacity observations are made by a qualified observer. Observations are made at the point of greatest opacity in the portion of the plume where condensed water vapor is not present. Observations are made at 15-second intervals for the duration of the test period.

8.6 Lead Determination by USEPA Method 12

This method is applicable for the determination of inorganic lead (Pb) emissions from stationary sources, only as specified in an applicable subpart of the regulations. USEPA Methods 2-4 are performed concurrently with, and as an integral part of, these determinations.

Flue gas is withdrawn isokinetically from the source at traverse points determined per USEPA Method 1. Particle-bound and gaseous Pb are collected in the nozzle, probe liner, filter, and impingers containing a solution of dilute nitric acid. The probe liner and filter are maintained at a temperature of 120 ± 14°C (248 ± 25°F), or such other temperature as specified by an applicable subpart of the standards or approved by the Administrator for a particular application. The collected samples are digested and analyzed via atomic absorption spectrophotometry using an air/acetylene flame.

9.0 QUALITY ASSURANCE PROCEDURES

TRC integrates our Quality Management System (QMS) into every aspect of our testing service. We follow the procedures specified in current published versions of the test Method(s) referenced in this report. Any modifications or deviations are specifically identified in the body of the report. We routinely participate in independent, third party audits of our activities and maintain:

- Louisiana Environmental Lab Accreditation Program (LELAP) accreditation;
- Accreditation from the Stack Testing Accreditation Council (STAC) and the American Association for Laboratory Accreditation (A2LA) that our operations conform with the requirements of ASTM D 7036 as an Air Emission Testing Body (AETB).

These accreditations demonstrate that our systems for training, equipment maintenance and calibration, document control and project management will fully ensure that project objectives are achieved in a timely and efficient manner with a strict commitment to quality.

All calibrations are performed in accordance with the test Method(s) identified in this protocol. If a method allows for more than one calibration approach, or if approved alternatives are available, the calibration documentation in the appendices specifies which approach is used. All measurement devices are calibrated or verified at set intervals against standards traceable to the National Institute of Standards and Technology (NIST). NIST traceability information is available upon request.

Raw data is kept on file at the TRC office performing the sampling. All samples from the test program are retained for 60 days after the submittal of the report, after which they are discarded unless TRC is advised otherwise.

Calculations are performed on the computer. An explanation of the nomenclature and calculations along with the complete test results are appended. Also to be appended are calibration data and copies of the raw field data sheets.

SCHUMANN

Certificate of Analysis

Sold To: ELKHART BRASS MFG. CO. INC.

Order No.: P119750-00

Ship To: ELKHART BRASS MFG. CO. INC.

Shipment Date: 04/20/16

Heat No.: 76654

Alloy: C83600/115 INGOT PN31085100

Comments

Element	Percentage	
COPPER	84.17	BALANCE
TIN	4.35	
LEAD	5.23	
ZINC	5.78	
NICKEL	0.29	
IRON	0.09	
ANTIMONY	0.05	
PHOSPHORUS	0.01	
SULFUR	0.027	
SILICON	Less than .005	
ALUMINUM	Less than .005	
MANGANESE		

Michael Moskowitz
Laboratory Manager

Sample Location Information for Isokinetic Sampling - Round Ducts

Project #: 253282
Company: Elkhart Brass
Plant: Elkhart, IN
Unit ID: EU29, EU30, EU31
Sample Location: Melt 1 Stack

Distance A: 2.33 Feet, 1.00 Duct diameters
Distance B: 4.67 Feet, 2.00 Duct diameters
Meets Method 1 criteria

Duct Diameter: 28 inches 2.33 feet
# of Ports Used: 2
# of Points/Diameter: 12
Sample Plane: Horizontal
Port Type: Nipple
Port Length: 3.0 inches
Port Inside Diameter: 6.0 inches

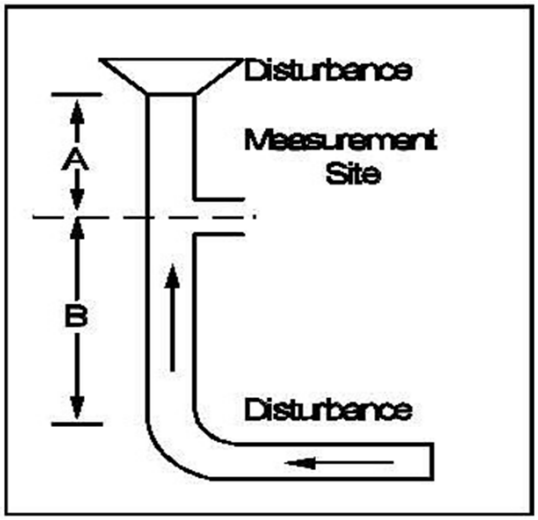

Traverse Point Locations

Point	% of diameter	Inches from wall	Inches from port edge
1	2.1	1.0 *	4.0
2	6.7	1.9	4.9
3	11.8	3.3	6.3
4	17.7	5.0	8.0
5	25.0	7.0	10.0
6	35.6	10.0	13.0
7	64.4	18.0	21.0
8	75.0	21.0	24.0
9	82.3	23.0	26.0
10	88.2	24.7	27.7
11	93.3	26.1	29.1
12	97.9	27.0 *	30.0

* Values have been relocated per EPA M1

Pre-cyclonic flow check conducted? Yes

Pre-Test Cyclonic Flow Check Data

	Port:			Port:			Port:			Port:		
	ΔP	T_s	a	ΔP	T_s	a	ΔP	T_s	a	ΔP	T_s	a
Point #	("H2O)	(^oF)	(^{o})	("H2O)	(^oF)	(^{o})	("H2O)	(^oF)	(^{o})	("H2O)	(^oF)	(^{o})
1	-	-	-	-	-	-	-	-	-	-	-	-
2	-	-	-	-	-	-	-	-	-	-	-	-
3	-	-	-	-	-	-	-	-	-	-	-	-
4	-	-	-	-	-	-	-	-	-	-	-	-
5	-	-	-	-	-	-	-	-	-	-	-	-
6	-	-	-	-	-	-	-	-	-	-	-	-
7	-	-	-	-	-	-	-	-	-	-	-	-
8	-	-	-	-	-	-	-	-	-	-	-	-
9	-	-	-	-	-	-	-	-	-	-	-	-
10	-	-	-	-	-	-	-	-	-	-	-	-
11	-	-	-	-	-	-	-	-	-	-	-	-
12	-	-	-	-	-	-	-	-	-	-	-	-

Average a: _____ (^{o}) Average Ts: _____ (^oF) Average ΔP: _____ ("H2O)
Status: _____ Avg of sqrt ΔP: _____

© 2015 TRC Environmental Corp.

Sample Location Information for Isokinetic Sampling - Round Ducts

Project #: 253282
Company: Elkhart Brass
Plant: Elkhart, IN
Unit ID: EU29, EU30, EU31
Sample Location: Melt 2 Stack

Distance A: 2.33 Feet, 1.00 Duct diameters
Distance B: 4.67 Feet, 2.00 Duct diameters
Meets Method 1 criteria

Duct Diameter: 28 inches 2.33 feet
# of Ports Used: 2
# of Points/Diameter: 12
Sample Plane: Horizontal
Port Type: Nipple
Port Length: 3.0 inches
Port Inside Diameter: 6.0 inches

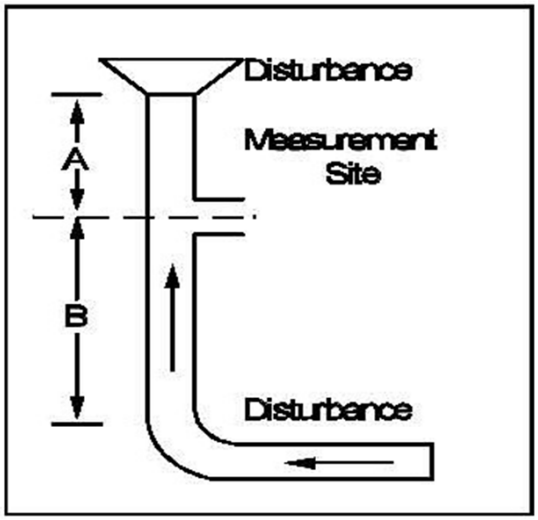

Traverse Point Locations

Point	% of diameter	Inches from wall	Inches from port edge
1	2.1	1.0 *	4.0
2	6.7	1.9	4.9
3	11.8	3.3	6.3
4	17.7	5.0	8.0
5	25.0	7.0	10.0
6	35.6	10.0	13.0
7	64.4	18.0	21.0
8	75.0	21.0	24.0
9	82.3	23.0	26.0
10	88.2	24.7	27.7
11	93.3	26.1	29.1
12	97.9	27.0 *	30.0

* Values have been relocated per EPA M1

Pre-cyclonic flow check conducted? Yes

Pre-Test Cyclonic Flow Check Data

	Port:			Port:			Port:			Port:		
	ΔP	T_s	a	ΔP	T_s	a	ΔP	T_s	a	ΔP	T_s	a
Point #	("H2O)	(^oF)	(^{o})	("H2O)	(^oF)	(^{o})	("H2O)	(^oF)	(^{o})	("H2O)	(^oF)	(^{o})
1	-	-	-	-	-	-	-	-	-	-	-	-
2	-	-	-	-	-	-	-	-	-	-	-	-
3	-	-	-	-	-	-	-	-	-	-	-	-
4	-	-	-	-	-	-	-	-	-	-	-	-
5	-	-	-	-	-	-	-	-	-	-	-	-
6	-	-	-	-	-	-	-	-	-	-	-	-
7	-	-	-	-	-	-	-	-	-	-	-	-
8	-	-	-	-	-	-	-	-	-	-	-	-
9	-	-	-	-	-	-	-	-	-	-	-	-
10	-	-	-	-	-	-	-	-	-	-	-	-
11	-	-	-	-	-	-	-	-	-	-	-	-
12	-	-	-	-	-	-	-	-	-	-	-	-

Average a: _____ (^{o}) Average Ts: _____ (^oF) Average ΔP: _____ ("H2O)
Status: _____ Avg of sqrt ΔP: _____

© 2015 TRC Environmental Corp.

Sample Location Information for Isokinetic Sampling - Round Ducts

Project #: 253282
Company: Elkhart Brass
Plant: Elkhart, IN
Unit ID: EU29, EU30, EU31
Sample Location: Tap Hood Stack

Distance A: 2.33 Feet, 1.00 Duct diameters
Distance B: 4.67 Feet, 2.00 Duct diameters
Meets Method 1 criteria

Duct Diameter: 28 inches 2.33 feet
# of Ports Used: 2
# of Points/Diameter: 12
Sample Plane: Horizontal
Port Type: Nipple
Port Length: 3.0 inches
Port Inside Diameter: 6.0 inches

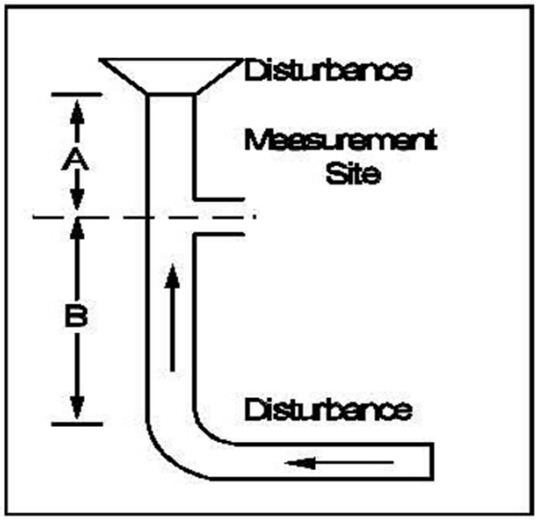

Traverse Point Locations

Point	% of diameter	Inches from wall	Inches from port edge
1	2.1	1.0 *	4.0
2	6.7	1.9	4.9
3	11.8	3.3	6.3
4	17.7	5.0	8.0
5	25.0	7.0	10.0
6	35.6	10.0	13.0
7	64.4	18.0	21.0
8	75.0	21.0	24.0
9	82.3	23.0	26.0
10	88.2	24.7	27.7
11	93.3	26.1	29.1
12	97.9	27.0 *	30.0

* Values have been relocated per EPA M1

Pre-cyclonic flow check conducted? Yes

Pre-Test Cyclonic Flow Check Data

	Port:			Port:			Port:			Port:		
	ΔP	T_s	a	ΔP	T_s	a	ΔP	T_s	a	ΔP	T_s	a
Point #	("H2O)	(^oF)	(^{o})	("H2O)	(^oF)	(^{o})	("H2O)	(^oF)	(^{o})	("H2O)	(^oF)	(^{o})
1	-	-	-	-	-	-	-	-	-	-	-	-
2	-	-	-	-	-	-	-	-	-	-	-	-
3	-	-	-	-	-	-	-	-	-	-	-	-
4	-	-	-	-	-	-	-	-	-	-	-	-
5	-	-	-	-	-	-	-	-	-	-	-	-
6	-	-	-	-	-	-	-	-	-	-	-	-
7	-	-	-	-	-	-	-	-	-	-	-	-
8	-	-	-	-	-	-	-	-	-	-	-	-
9	-	-	-	-	-	-	-	-	-	-	-	-
10	-	-	-	-	-	-	-	-	-	-	-	-
11	-	-	-	-	-	-	-	-	-	-	-	-
12	-	-	-	-	-	-	-	-	-	-	-	-

Average a: _____ (^{o}) Average Ts: _____ (^oF) Average ΔP: _____ ("H2O)
Status: _____ Avg of sqrt ΔP: _____

© 2015 TRC Environmental Corp.

Determination of Stack Gas Velocity and Volumetric Flow Rate

USEPA Promulgated Test Method 2

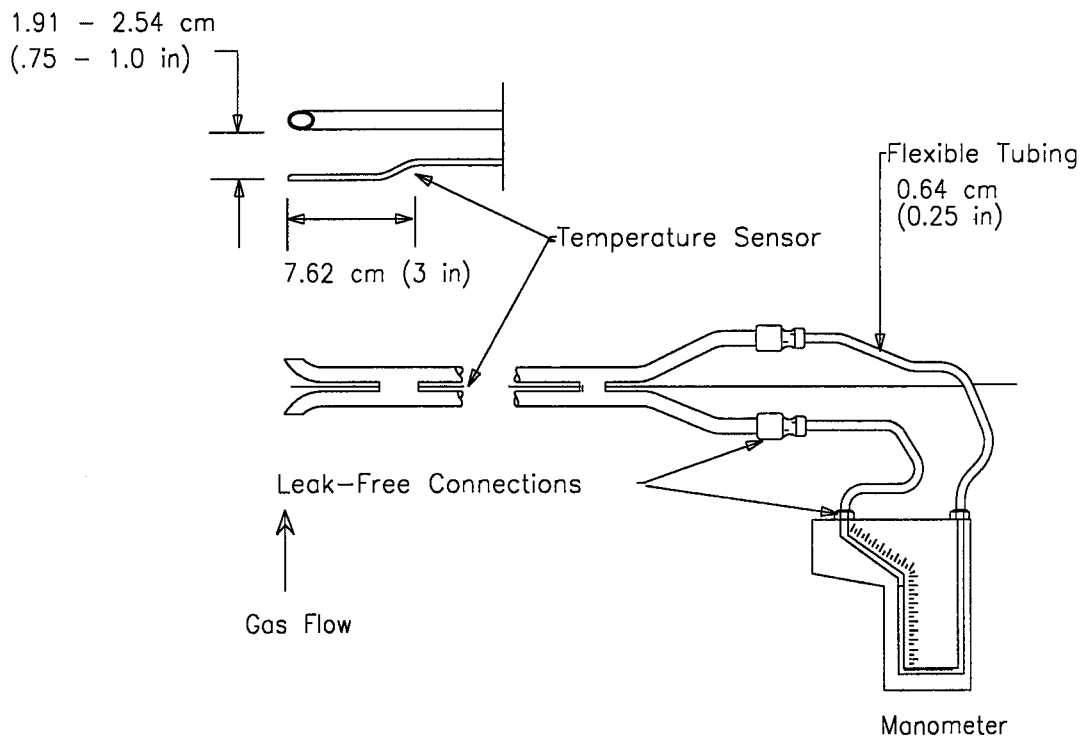

Gas Analysis for the Determination of Dry Molecular Weight

USEPA Promulgated Method 3

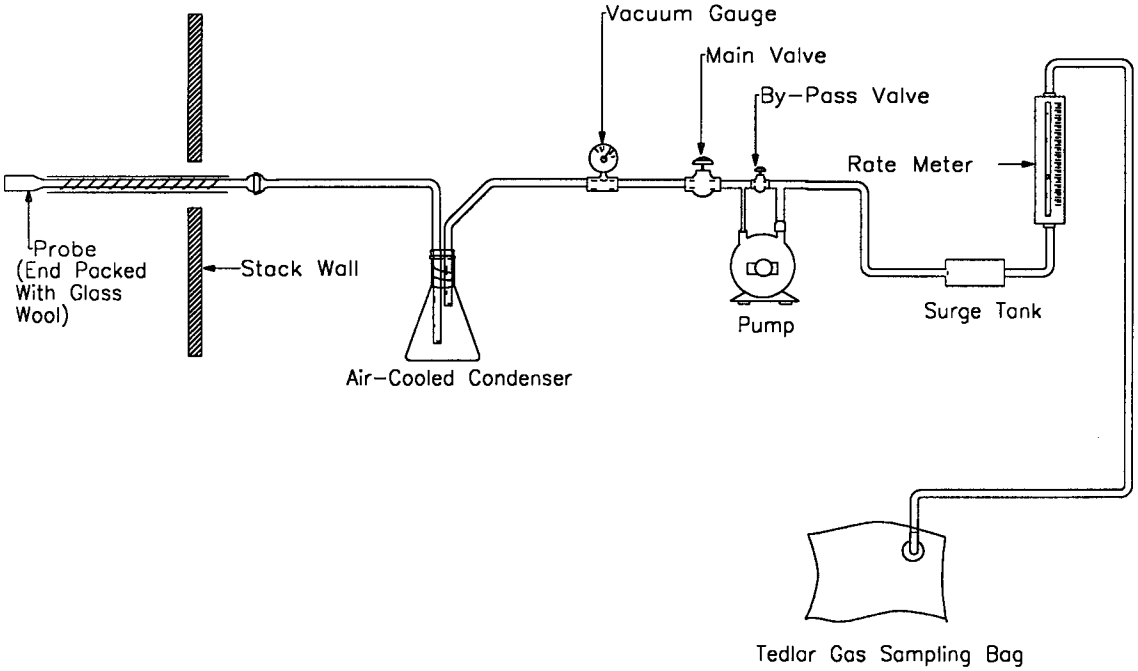

Determination of Particulate Emissions From Stationary Sources

USEPA Promulgated Method 5

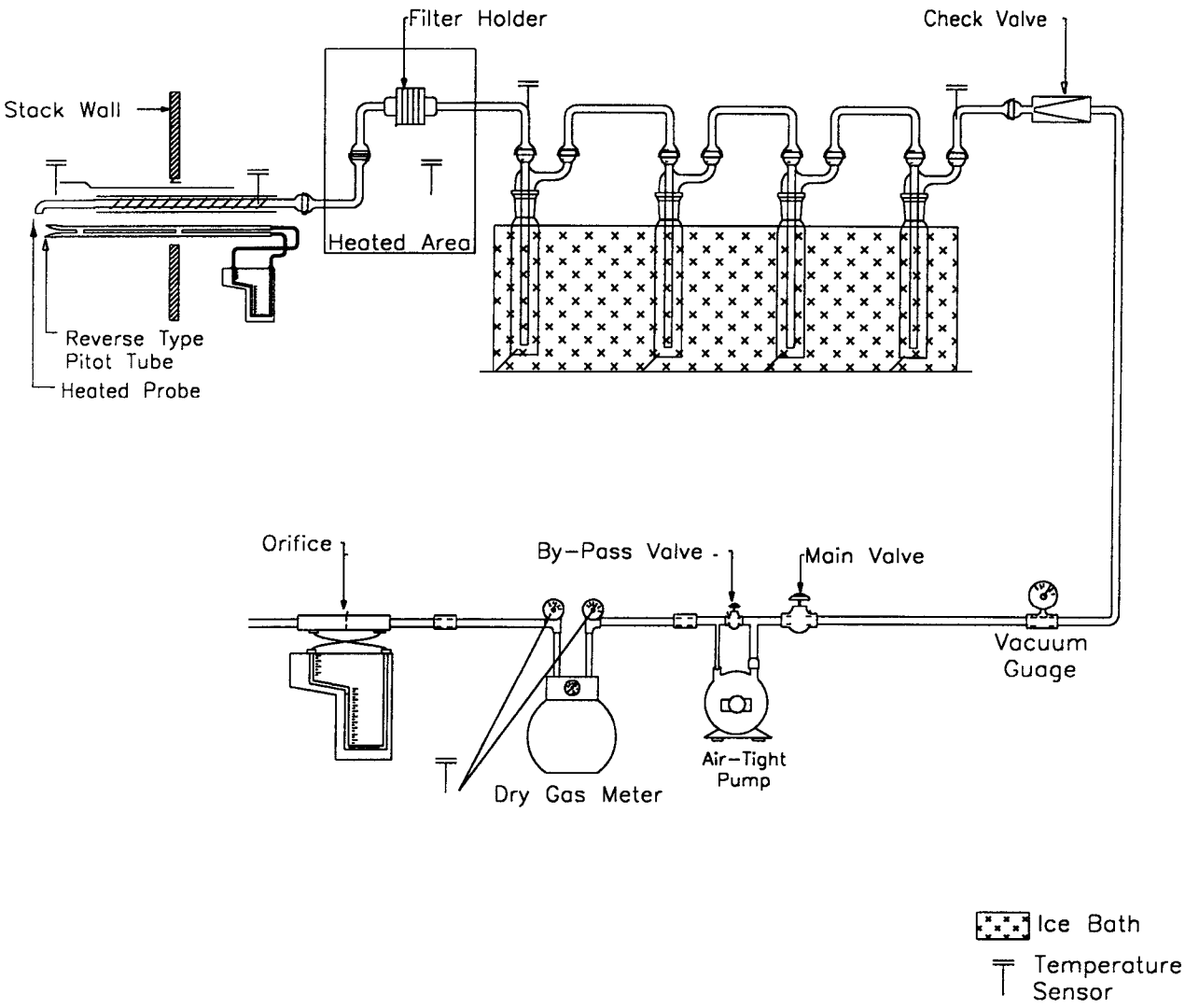

©2013 TRC Environmental Corp. TRC-DWG-PTM-005 Rev. 02/06/2013

Isokinetic Test Support Data

Company: _____ FSR#: _____
Plant: _____ Test Method(s): _____
Unit ID: _____ Test Run #: 1
Location: _____ Test Date(s): _____

Console Operator: _____ Unit Operating Mode: _____
Console ID: _____ Duct Shape/Area: _____ / _____ ft^2
Meter Y: _____ Fuel Type: _____
Orifice DH@i: _____ Fd Factor: _____ dscf/MMBtu
Pitot Tube ID: _____ Fc Factor: _____ scf/MMBtu
Cal. coefficient (Cp): _____ Fuel heat content: _____ Btu / _____
Probe Liner Material: _____ Process/fuel flow rate: _____ _____ / hr
Nozzle Material: _____ Soot blown? _____
Nozzle Diameter: _____ in Duration: _____ min

Sample collection time
Total # of points: _____
Target Sample time/point: _____ min
Target run duration: _____ min

Barometric Pressure (P_{bar}): _____ in Hg
Flue Static Pressure (P_g): _____ in H2O
Flue Pressure (P_s): _____ in Hg

Imp #	Contents	Tare wt. (grams)	Final wt: (grams)
1			
2			
3			
4			
		Net:	

Leak Checks
Pre-Test Train Leak Check: _____ CFM @ _____ "Hg
Pre-Test Pitot Leak Check: _____ (Pass or Fail)
Post-Test Train Leak Rate: _____ CFM @ _____ "Hg
Post-Test Pitot Leak Check: _____ (Pass or Fail)
Pump/Orifice Leak Check: _____ (Pass or Fail)
Filter/Thimble ID: _____
Tare Weight: _____ grams

Fixed Gas Analysis:
CO_2: _____ %vol
O_2: _____ %vol
N_2: _____ %vol

Description of Filter and Front Half Rinses:

Description of Impinger liquid:

General Comments:

© 2013 TRC Environmental Corp.

AM-EMT-15 Rev. 31
Revised 06/11/13

Company: ____________ Job #: ____________ Test Date: ____________
Plant: ____________ Methods: ____________ X-Factor: ____________
Unit: ____________ Run #: ____________ Minutes/pt: ____________
Location: ____________ Traverse Sheet: ______ of ______

								This data not entered in Excel					
Port & Point ID	Clock Time	Meter Volume ft^3	DP in. H_2O	Stack °F	Dry Gas Meter		Orifice DH in. H_2O	Probe Liner °F	Filter Outlet °F	Impinger Train		Pump Vacuum in. Hg
					Inlet °F	Outlet °F				Outlet °F	CPM Filter °F	

Comments/notes:

© 2013 TRC Environmental Corp.

AM-EMT-15 Rev. 31
Revised 06/11/13

TRC
Results you can rely on

Chain of Custody Record

Project Name:	TRC Contact:	T:
	Email:	
Site Name:	Sampling System Prepared by:	
Project No.:	Samples Recovered by:	

Analyses Required

General Instructions: This form documents all changes in custody. The name and dated signature for each person associated with the release or receipt of the listed samples must be recorded.

Sub Lab ID	Sample ID Number	Sample Description* (Unit-Location-Method-Run-Container Number)	Date Sampled	Run Time (Optional)	**No. of Containers						Comments:

TAT: Standard Need By Date:	Project Remarks:	Relinquished by: (Sign & Print)	Date/Time	Received by: (Sign & Print)	Date/Time
Shipped by: Shipped On:					
Ship To Attn:					
Lab:					
Address:					
Phone:					

Special Instructions:

SUBCONTRACTOR LABORATORY MUST CONTACT THE CITED TRC CONTACT TO ENSURE A PO IS IN PLACE.

TRC Environmental Corporation
7521 Brush Hill Road
Burr Ridge, Illinois 60527 USA
T: (312) 533-2042 F: (312)533-2070

© 2013 TRC Environmental Corp.

Filterable Particulate Sample Analysis Summary

FSR#: _____ Unit ID: _____
Company: _____ Location: _____
Plant: _____ Test Date(s): _____

Front-Half PM	Run 1	Run 2	Run 3	Run 4	Blank
Total filter weight gain (grams):	-	-	-	-	-
Front-half acetone rinse volume (ml):	-	-	-	-	-
Front-half acetone rinse weight gain (grams):	-	-	-	-	-
Net front-half acetone rinse mass (grams):	-	-	-	-	-
Net front-half PM (grams):	**-**	**-**	**-**	**-**	-

© 2013 TRC Environmental Corp.

PARTICULATE TEST RESULTS SUMMARY **Page 1 of 1**

Company:
Plant:
Unit:
Location:

Test Run Number	1	2	3	4	Average
Source Condition					
Date					
Start Time					
End Time					
Sample Duration (min):					
Average Gas Temp (^oF):					
Fractional Gas Moisture Content:					
Gas CO_2 Content (%vol):					
Gas O_2 Content (%vol):					
Excess Air (%):					
Gas Wet MW (lb/lbmole-mole):					
Average Gas Vel (ft/sec):					
Measured Volumetric Flow Rate					
Q (actual ft^3/min):					
Q_{std} (std ft^3/min):					
$Q_{std(dry)}$ (dry std ft^3/min):					
Sample Volume (dry std ft^3):					
Sample Volume (Nm^3):					
PM Collected (mg):					
Filterable					
PM Concentration (gr/dscf):					
Filterable					
PM Concentration (gr/dscf corrected to 15% O_2):					
Filterable					
PM Emission Rate (lb/hr based on measured volumetric flow rate):					
Filterable:					
Isokinetic Variance					

© 2013 TRC Environmental Corp.

Company: **Run:**
Plant: **Test Date:**
Unit:
Test Location:

X-Factor Isokinetic Correction Factor (based on pre-test data

$$X = 846.72 \times (Dn)^4 \times \Delta H_{@I} \times (C_p)^2 \times (1 - B_{ws})^2 \times \left[\frac{(M_d \times T_m \times P_s)}{\left(M_s \times T_s \times \left(P_{bar} + \left(\Delta H_{@I} / 13.6 \right) \right) \right)} \right] \times \left(\frac{T_s}{T_m} \right)$$

Where:

T_s = Temperature of effluent gas (^oR)
T_m = Average dry test meter temperature (^oR)
D_n = Nozzle Diameter (in.)
$DH_{@I}$ = Orifice pressure drop corresponding to 0.75 cfm meter flow rate (in. H20)
C_p = Pitot Tube Coefficient (dimensionless)
B_{ws} = Effluent gas fractional moisture content (dimensionless)
M_d = Dry molecular weight of exhaust (lb/lb-mole)
M_s = Molecular weight of exhaust, wet basis (lb/lb-mole)
P_s = Absolute flue gas pressure ("Hg)
P_{bar} = Ambient barometric pressure at sample elevation ("Hg)

D_n =	_____	in.	P_s =	_____	in. Hg abs.
$DH_{@I}$ =	_____	in. Hg	M_s =	_____	lb/lb-mole
Cp =	_____	(dimensionless)	T_s =	_____	^oF
M_d =	28.00	lb/lb-mole	P_{bar} =	_____	in. Hg
T_m =	460	^oR	B_{ws} =	_____	(dimensionless)

X = _____

Dry Molecular Weight

$$Md = 0.44 \times (\%CO_2) + 0.32 \times (\%O_2) + 0.28 \times \%N_2$$

Where:

Md = Effluent gas molecular weight (lb/lb-mole, dry basis)
$\%CO_2$ = Effluent gas Carbon Dioxide Content (% volume, dry basis)
$\%O_2$ = Effluent gas Oxygen Content (% volume, dry basis)
$\%N_2$ = Effluent gas Nitrogen Dioxide Content (% volume, dry basis)

$\%CO_2$ =	_____	%vol dry	$\%N_2$ =	_____	%vol dry
$\%O_2$ =	_____	%vol dry			

Md = _____ **lb/lb-mole**

© 2013 TRC Environmental Corp.

Company: **Run:**
Plant: **Test Date:**
Unit:
Test Location:

Wet Molecular Weight

$$Ms = Md \times (1-Bws) + (18.0 \times Bws)$$

Where:

Ms = Effluent gas molecular weight (lb/lb-mole, wet basis)

Bws = Effluent gas fractional moisture content (dimensionless)

Md = _____ lb/lb-mole *Bws* = _____

Ms = _____ lb/lb-mole

Effluent Gas Pressure

$$P_s = P_{bar} + (P_f/13.6)$$

Where:

P_s = flue gas pressure ("Hg)

P_{bar} = Ambient barometric pressure at sample elevation ("Hg)

P_g = Flue gas gauge pressure ("H_2O)

P_{bar} = _____ "Hg P_g = _____ "H_2O

Ps = 0.00 "Hg

Average Meter Temperature

$$T_m = \frac{\sum_{I=1}^{n} (T_{mini} + T_{mouti})/2}{n}$$

Where:

T_m = Average dry test meter temperature (^oR)

T_{min} = Temperature of gas entering dry test meter (^oR)

T_{mout} = Temperature of gas leaving dry test meter (^oR)

Avg T_{min} = _____ ^oR Avg T_{mout} = _____ ^oR

T_m = _____ ^oR

© 2013 TRC Environmental Corp.

Company: **Run:**
Plant: **Test Date:**
Unit:
Test Location:

DH at Sample Point - Example Point 0

$$DHi = X \times DPi \times (T_{mi}/T_{si})$$

Where:

DH = Pressure drop across calibrated orifice ("H_2O)

DP = Pressure drop across pitot ("H_2O)

T_s = Temperature of effluent gas (^oR)

X = _____ DPi = _____ "H_2O

T_{mi} = _____ ^oR T_{si} = 460.0 ^oR

DHi = _____ "H_2O

Sample Volume at Standard Conditions

$$V_{m(std)} = (T_{std}/29.92) \times Y \times V_m \times (P_{bar} + DH/13.6)/T_m$$

Where:

$V_{m(std)}$ = Sample volume collected corrected to 29.92 in. Hg and (°R) (ft3, dry basis)

Y = Dry test meter calibration coefficient (dimensionless)

V_m = V_m = Sample volume collected at actual conditions (ft^3, dry basis)

T_{std} = Standard Temperature (°R)

Y = _____ V_m = _____ cf

P_{bar} = _____ "Hg DH = _____ "H_2O

T_m = _____ °R T_{std} = _____ °R

$V_{m(std)}$ = _____ dscf

Volume of Water Vapor Condensed

$$V_{wc(std)} = 0.04715 \times M_{H2O}$$

Where:

$V_{wc(std)}$ = Volume of water vapor collected at 29.92"Hg and 528^oR (ft^3)

M_{H2O} = Net weight gain of impingers (grams)

M_{H2O} = _____ grams

$V_{w(std)}$ = _____ wscf

Moisture Content

$$Bws = \frac{V_{wc(std)}}{V_{wc(std)} + V_{m(std)}}$$

$V_{wc(std)}$ = _____ dscf $V_{m(std)}$ = _____ wscf

***Bws* = _____**

© 2013 TRC Environmental Corp.

Company: **Run:**
Plant: **Test Date:**
Unit:
Test Location:

Average Duct Velocity

$$V_s = 85.49 \times Cp \times \text{Sqrt DP (avg)} \times (Ts/(Ps \times Ms))^{1/2}$$

Where:

V_s = Average velocity of effluent gas (ft/sec)

C_p = Pitot calibration coefficient (dimensionless)

Sqrt DP (avg) = Average of the square roots of DP's at all traverse points

C_p = _____ Sqrt DP (avg) = _____

T_s = _____ ^oR Ps = _____ "Hg

Ms = _____ lb/lb-mole

Vs = _____ ft/sec

Method 2 Volumetric Flow Rate (Actual Basis)

$$Q = V_s \times A \times 60$$

Where:

Q = Effluent gas volumetric flow rate at actual conditions (ft^3/min)

A = Cross-sectional area of duct at sample location (ft^2)

Vs = _____ ft/sec A = _____ ft^2

Q = _____ cfm

Method 2 Volumetric Flow Rate (Standard Basis)

$$Q_{std} = \frac{528 \times Q \times P_s}{T_s \times 29.92}$$

Where:

Q_{std} = Effluent gas volumetric flow rate corrected to 29.92"Hg and 528^oR (ft^3/min)

Q = _____ cfm Ps = _____ "Hg

Ts = _____ ^oR

Qstd = _____ scfm

© 2013 TRC Environmental Corp.

Company: **Run:**
Plant: **Test Date:**
Unit:
Test Location:

Method 2 Volumetric Flow Rate (Standard Dry Basis)

$$Q_{std(dry)} = Q_{std} \times (1-Bws)$$

Where:

$Q_{std(dry)}$ = Effluent gas volumetric flow rate corrected to 29.92"Hg and 528°R (ft^3/min, dry basis)

Qstd = _____ scfm *Bws* = 0.000

Qstd(dry) = _____ dscfm

Volumetric Flow Rate Calculated Based on Fuel Consumption (Standard Dry Basis)

$$Q_{cfc} = \frac{F_d \times GHV \times FCR \times 20.9}{1000000 \times (20.9 - \%O_2)}$$

Where:

Q_{cfc} =Calculated effluent gas volumetric flow corrected to 29.92"Hg and 528°R (ft^3/min, dry basis)

F_d = Dry basis, oxygen-based fuel factor (dry standard ft^3/MMBtu)

GHV = Gross Heating Value of fuel (Btu/unit mass or volume)

FCR = Fuel consumption rate (mass or volume/hr)

Fd = 0 dscf/MMBtu GHV = 0 Btu/
FCR = 0 /min %O2 = 0 %vol dry

Q_{cfc} = - dscf/hr

Isokinetic Variation:

$$I = \frac{0.0945 \times T_s \times V_{m(std)}}{V_s \times \theta \times A_n \times P_s \times (1-Bws)}$$

Where:

I = Percent of isokinetic sampling (dimensionless)

θ = Total sample collection time (min)

A_n = Cross-sectional area of nozzle (ft^2)

Ts = _____ °R Vm(std) = _____ dscf
Vs = _____ ft/sec θ = _____ min
Ps = _____ "Hg An = _____ ft^2 Bws = 0.000

I = _____ %

© 2013 TRC Environmental Corp.

METHOD 9 REDUCED FIELD DATA
PROJECT NUMBER:

Test Date:
Facility:
Location:
Process:

Start Time:
End Time:

Test Results:

Maximum 6 Minute Average:	0.0	%
Average Opacity:	0.0	%
Maximum Opacity:	0.0	%
Minimum Opacity:	0.0	%
# of Readings >20%:	0	
Number of Readings:	240	

Interval	0	15	30	45
1				
2				
3				
4				
5				
6				
7				
8				
9				
10				
11				
12				
13				
14				
15				
16				
17				
18				
19				
20				
21				
22				
23				
24				
25				
26				
27				
28				
29				
30				

Interval	0	15	30	45
31				
32				
33				
34				
35				
36				
37				
38				
39				
40				
41				
42				
43				
44				
45				
46				
47				
48				
49				
50				
51				
52				
53				
54				
55				
56				
57				
58				
59				
60				

© 2013 TRC Environmental Corp.

Sheet _____ of _____

VISIBLE EMISSION EVALUATION

Facility: _____
_____
_____
_____
_____

Date: _____
Observer: _____

Observation Began: _____
Ended: _____

Observation Point:
_____
_____

Distance From Source: ___ ft.
Source Height: _____
Color of Emission: _____
Background: _____
_____
Sky Condition: _____
_____
Sun Position: _____
Temperature: _____
Wind _____ At ____ MPH
Reading Conditions: _____
_____

General Comments:
_____
_____
_____
_____
_____
_____
_____

_____
_____
_____
_____

Signature:
_____

Certification Date:
_____

	0	15	30	45	XX	XX	0	15	30	45	
					0	30					
					1	31					
					2	32					
					3	33					
					4	34					
					5	35					
					6	36					
					7	37					
					8	38					
					9	39					
					10	40					
					11	41					
					12	42					
					13	43					
					14	44					
					15	45					
					16	46					
					17	47					
					18	48					
					19	49					
					20	50					
					21	51					
					22	52					
					23	53					
					24	54					
					25	55					
					26	56					
					27	57					
					28	58					
					29	59					

Comments:

Visible Emissions Wind and Sun Chart

USEPA Method 9

COMMENTS: _____

_____

_____

_____

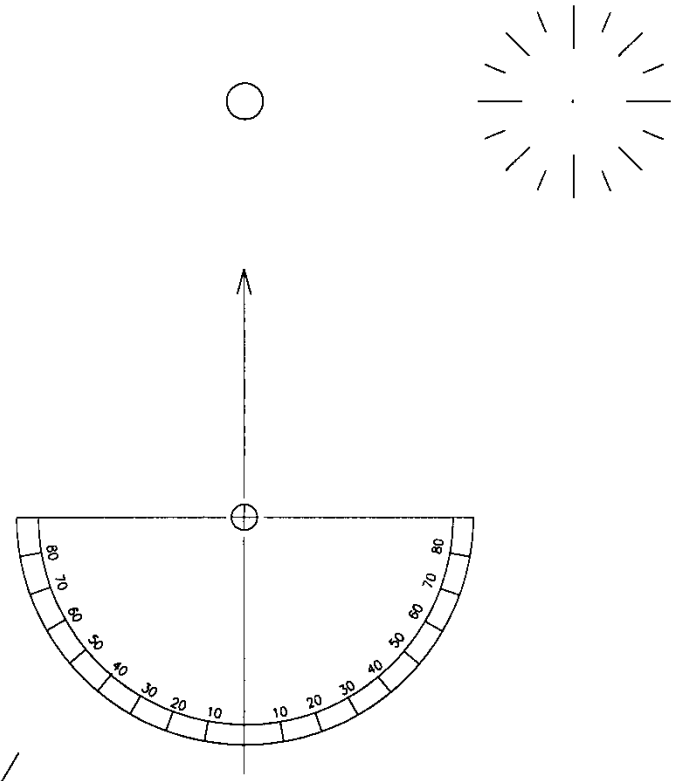

Date: ____/____/____

Site: _____

_____

_____

Observer: _____

EPA Reference Method 9

Equipment Configuration for Meter Box Calibration

USEPA Promulgated Method 5

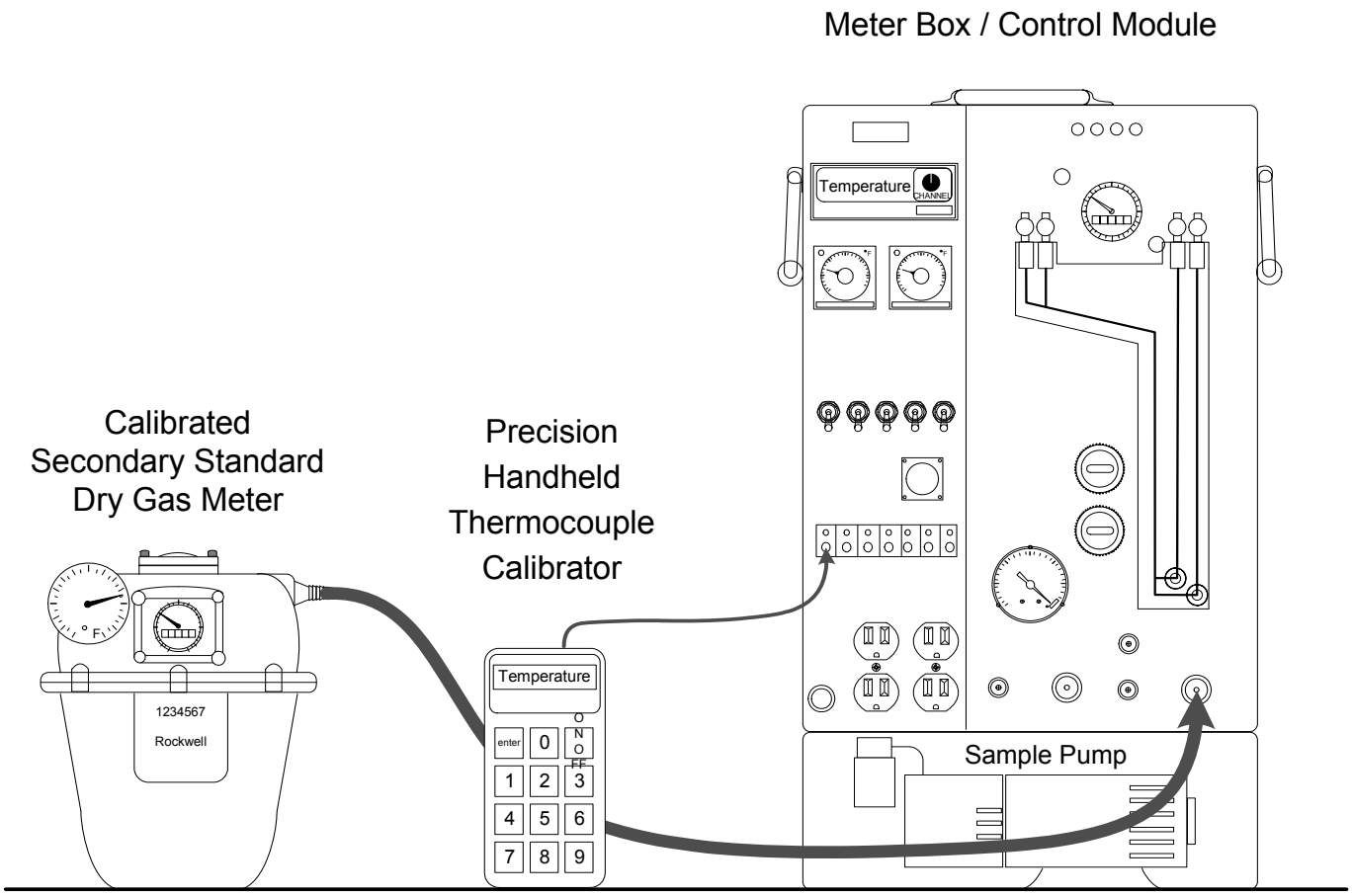

©2013 TRC Environmental Corp. TRC-DWG-PTM-005-3 Rev. 02/06/2013

Control Module I.D. No. _____ System Leak Check: _____ Date: _____

Standard Meter I.D. No.: _____ Standard Meter Calibration Date: _____ Calibrated By: _____

Standard Meter (Y_{ds}): _____ Standard Meter Calibration Due Date: _____ Barometric Pressure : _____

Run Number	Orifice Setting in.$H_2$0	Meter Pressure in.$H_2$0	Standard Meter Volume Vr	Control Module DGM Volume Vd	Standard Meter Temp. F Tr	Dry Gas Meter Inlet Temp. F Tdi	Dry Gas Meter Outlet Temp. F Tdo	Dry Gas Meter Avg. Temp. F Td	Time Min.	Time Sec.	Gamma Correction Coef. Y	Pressure equal to: 0.75 cfm @ STP (DH@)	Flow Rate (Q) scfm
Initial													
Final											#DIV/0!		
Difference 1	0.35		0.000	0.000	#DIV/0!	#DIV/0!	#DIV/0!	#DIV/0!			#DIV/0!	#DIV/0!	#DIV/0!
Initial													
Final											#DIV/0!		
Difference 2	0.85		0.000	0.000	#DIV/0!	#DIV/0!	#DIV/0!	#DIV/0!			#DIV/0!	#DIV/0!	#DIV/0!
Initial													
Final											#DIV/0!		
Difference 3	2.00		0.000	0.000	#DIV/0!	#DIV/0!	#DIV/0!	#DIV/0!			#DIV/0!	#DIV/0!	#DIV/0!
											#DIV/0!		
								Pre Test Calibration Factor (Y_{avg})			#DIV/0!	#DIV/0!	

Specifications: CFR 40, Part 60, Appendix A, Method 5, section 10.3.1. Calibration Before Use.

©2013 TRC Environmental Corp.

TRC

Control Module I.D. No. _____ System Leak Check: _____ Date: _____

Standard Meter I.D. No.: _____ Standard Meter Calibration Date: _____ Calibrated By: _____

Standard Meter (Y_{ds}): _____ Standard Meter Calibration Due Date: _____ Barometric Pressure : _____

Run Number	Sample Train Vacuum (Hg") (avg test value)	Sample Train DH@$_{avg}$ ($H_2$0") (avg test value)	Standard Meter Gas Volume Vr	Control Module DGM Volume Vd	Standard Meter Temp. F Tr	Dry Gas Meter Inlet Temp. F Tdi	Dry Gas Meter Outlet Temp. F Tdo	Dry Gas Meter Avg. Temp. F Td	Time Min.	Time Sec.	Gamma Correction Coef. Y	Pressure equal to: 0.75 cfm @ STP (DH@)	Flow Rate (Q) scfm
Initial													
Final											#DIV/0!		
Difference 1			0.000	0.000	#DIV/0!	#DIV/0!	#DIV/0!	#DIV/0!			#DIV/0!	#DIV/0!	#DIV/0!
Initial													
Final											#DIV/0!		
Difference 2			0.000	0.000	#DIV/0!	#DIV/0!	#DIV/0!	#DIV/0!			#DIV/0!	#DIV/0!	#DIV/0!
Initial													
Final											#DIV/0!		
Difference 3			0.000	0.000	#DIV/0!	#DIV/0!	#DIV/0!	#DIV/0!			#DIV/0!	#DIV/0!	#DIV/0!

#DIV/0!

Post Test Calibration Factor (Y_{avg}) #DIV/0! #DIV/0!

Pre Test Calibration Factor (Y_{avg}):

Pre Test Calibration (Date):

% diff. between Pre & Post (Y_{avg}): #DIV/0! #DIV/0!

Specifications: CFR 40, Part 60, Appendix A, Method 5, section 10.3.2. Calibration After Use.

If difference between Pre & Post is less than 5% use Pre Test (Y)

©2013 TRC Environmental Corp.

Analyst:	-
Date:	-
Project Number:	-
Client:	-
Test Location:	-

Calibration Tools: Include all of the tools from the field calibration kit that you will be using on this project. (See SOP AM-CAL-025 for instructions on re-verification)

Item	ID#	S/N	Calibration Due Date
Digital Caliper	-		-
Thermometer	-	-	-
Barometer	-	-	-
Calibration Weight, 100 g	-	-	-
Calibration Weight A, 500 g	-	-	-
Calibration Weight B, 500 g	-	-	-
Type A Angle Finder	-		-
Plastic/Magnetic Torpedo Level	-		

© 2014 TRC Environmental Corp.

Pre Test Thermocouple Calibration Checks

Analyst:	-
Date:	-
Project Number:	-
Client:	-
Test Location:	-

(See SOP AM-CAL-005 for instructions)

Console/Meter Box ID #	-
Probe ID#	-
Test Location/Measurement Point Info:	-
NIST Thermometer ID #	-

Procedure 1: Calibrate thermocouple against a reference thermometer.

After each test run series, check the accuracy (and, hence, the calibration) of each thermocouple system at ambient temperature, or any other temperature, within the range specified by the manufacture, using a reference thermometer (either NIST reference)

Procedure 2: Check the response of the thermocouple to a change in temperature.

Check the "continuity" of the thermocouple by subjecting it to a change in temperature (e.g., removing it from the stack or touching an ice cube). This step will also check for loose connections and reversed connections.

Measurement	T/C Temp, ^{o}F	NIST Thermometer Temp, ^{o}F	Difference, ^{o}F (± 2)	Continuity Check	Overall Status
Stack	-	-	-	-	-
Filter	-	-	-	-	-
Impinger Exit	-	-	-	-	-
Meter in	-	-	-	-	-
Meter Out	-	-	-	-	-
Probe	-	-	-	-	-
Other	-	-	-	-	-
Other	-	-	-	-	-

Notes:

© 2014 TRC Environmental Corp.

Post Test Thermocouple Calibration Checks

Analyst:	-
Date:	-
Project Number:	-
Client:	-
Test Location:	-

(See SOP AM-CAL-005 for instructions)

Console/Meter Box ID #	-
Probe ID#	-
Test Location/Measurement Point Info:	-
NIST Thermometer ID #	-

Procedure 1: Calibrate thermocouple against a reference thermometer.

After each test run series, check the accuracy (and, hence, the calibration) of each thermocouple system at ambient temperature, or any other temperature, within the range specified by the manufacture, using a reference thermometer (either NIST reference)

Procedure 2: Check the response of the thermocouple to a change in temperature.

Check the "continuity" of the thermocouple by subjecting it to a change in temperature (e.g., removing it from the stack or touching an ice cube). This step will also check for loose connections and reversed connections.

Measurement	T/C Temp, ^{o}F	NIST Thermometer Temp, ^{o}F	Difference, ^{o}F (± 2)	Continuity Check	Overall Status
Stack	-	-	-	-	-
Filter	-	-	-	-	-
Impinger Exit	-	-	-	-	-
Meter in	-	-	-	-	-
Meter Out	-	-	-	-	-
Probe	-	-	-	-	-
Other	-	-	-	-	-
Other	-	-	-	-	-

Notes:

© 2014 TRC Environmental Corp.

PRE TEST TYPE S PITOT TUBE INSPECTION

(See SOP AM-CAL-006 for Instructions)

Pitot Tube No. : _____-_____ Date: _____-_____ Analyst: _____-_____

Project Number: _____-_____ Client: _____-_____ Test Location: _____-_____

Digital Caliper ID: _____-_____ Level ID: _____-_____ Angle Finder ID: _____-_____

Pitot tube assembly level? _____yes _____no

Pitot tube openings damaged? _____yes (explain below) _____no

α_1 = _____ ^{o} (<10°), α_2 = _____ ^{o} (<10°) z = A tan γ = 0.000 (in.); (<0.125 in.)

β_1 = _____ ^{o} (<5°), β_2 = _____ ^{o} (<5°) w = A tan θ = 0.000 (in.); (<0.03125 in.)

γ = _____ ^{o}, θ = _____ ^{o}, A = _____ (in.) P_A = 0.000 (in.), P_B = 0.000 (in.), D_t* = -_____ (in.)

Comments: _____

Note: *D_t = Recommended nominal pitot tube diameter of 0.250 (in.) or 0.375 (in.).

Calibration required? _____yes _____no

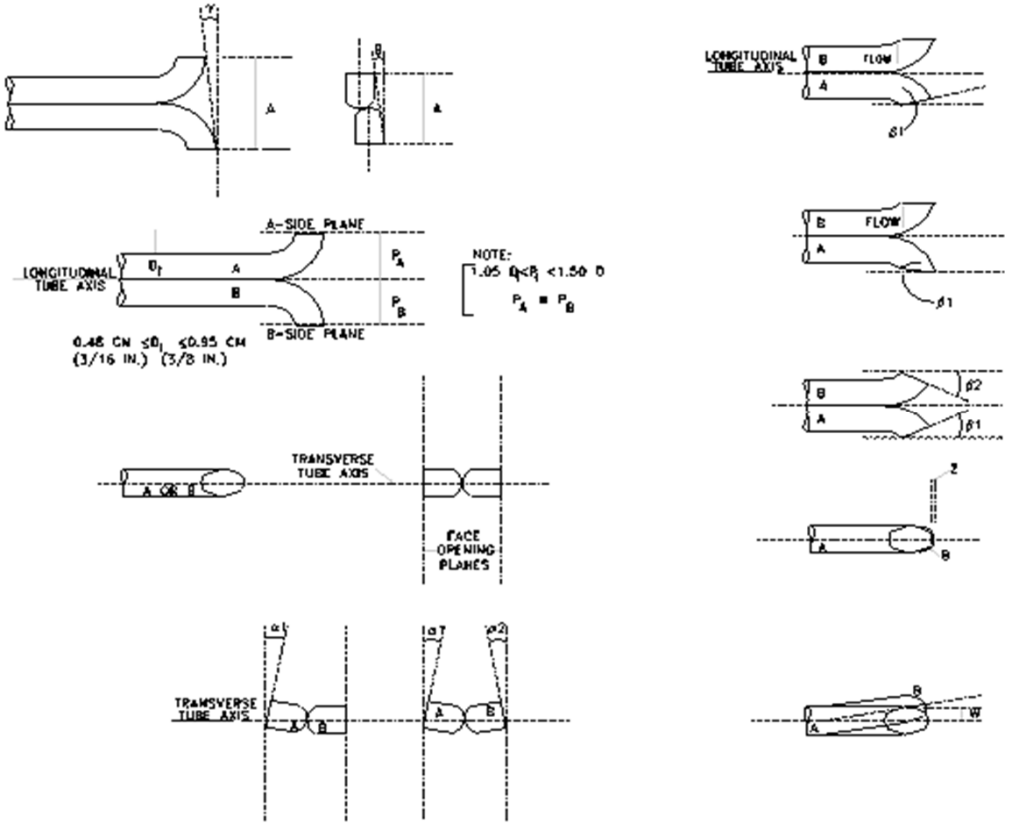

© 2014 TRC Environmental Corp.

POST TEST TYPE S PITOT TUBE INSPECTION

(See SOP AM-CAL-006 for Instructions)

Pitot Tube No. : _____-_____ Date: _____-_____ Analyst: _____-_____

Project Number: _____-_____ Client: _____-_____ Test Location: _____-_____

Digital Caliper ID: _____-_____ Level ID: _____-_____ Angle Finder ID: _____-_____

Pitot tube assembly level? _____yes _____no

Pitot tube openings damaged? _____yes (explain below) _____no

α_1 = _____ ^{o} (<10°), α_2 = _____ ^{o} (<10°) z = A tan γ = 0.000 (in.); (<0.125 in.)

β_1 = _____ ^{o} (<5°), β_2 = _____ ^{o} (<5°) w = A tan θ = 0.000 (in.); (<0.03125 in.)

γ = _____ ^{o}, θ = _____ ^{o}, A = _____ (in.) P_A = 0.000 (in.), P_B = 0.000 (in.), D_t* = - (in.)

Comments: _____

Note: *D_t = Recommended nominal pitot tube diameter of 0.250 (in.) or 0.375 (in.).

Calibration required? _____yes _____no

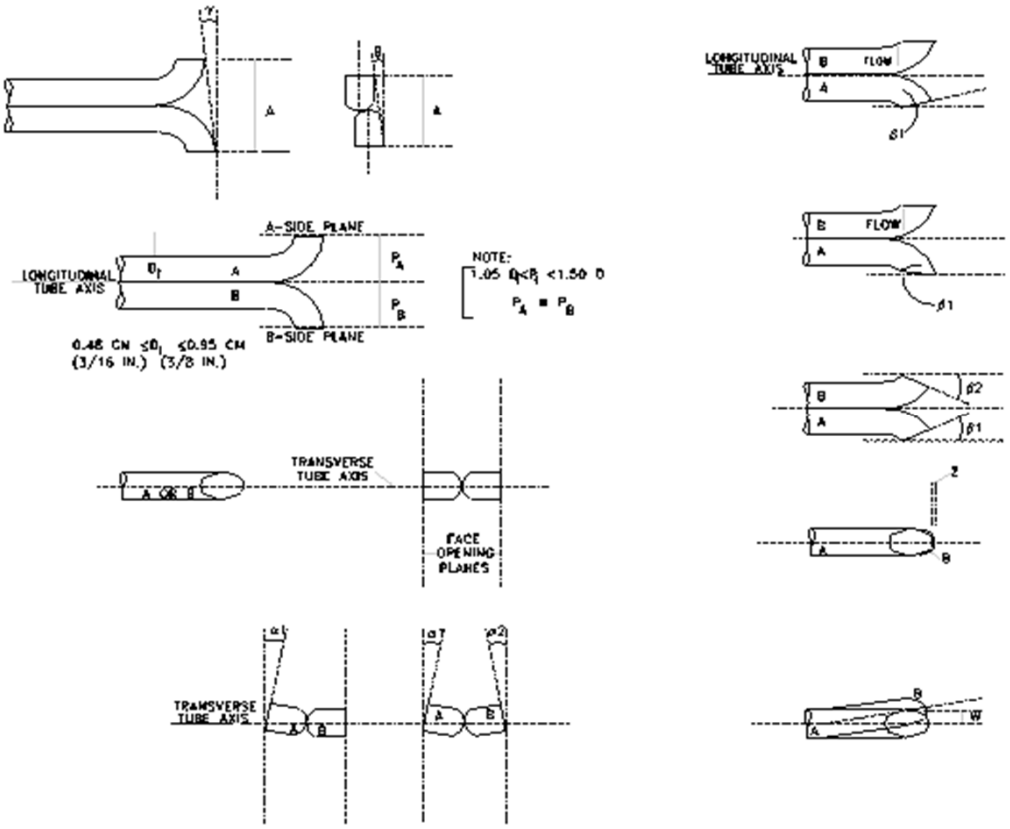

© 2014 TRC Environmental Corp.

PITOT TUBE ASSEMBLY INSPECTION

Analyst:	-
Date:	-
Project Number:	-
Test Location:	-
EPA Probe Configuration:	

(See SOP AM-CAL-006 for Instructions)

A **B**

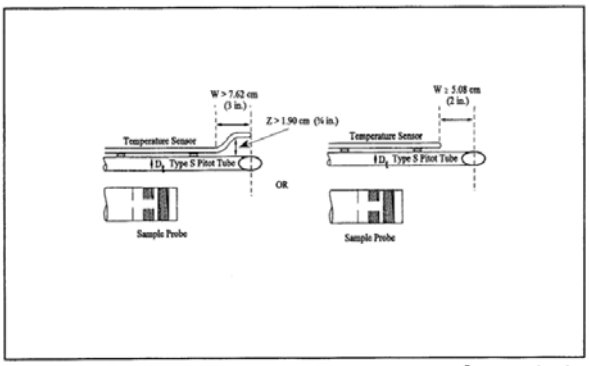

Figure 2-4. Proper temperature sensor placement to prevent interference; D_t between 0.48 and 0.95 cm (3/16 and 3/8 in).

Configuration (A, B or NA): NA

Tube diameter (D_t), Inch: _____

Distance "W", Inch: _____

Distance "Z" Inch: _____

Correct configuration? NA

NA - Temperature sensor not mounted on pitot tube
Configuration A - W >3 inches, Z> 0.75 inches
Configuration B - W at least 2 inches

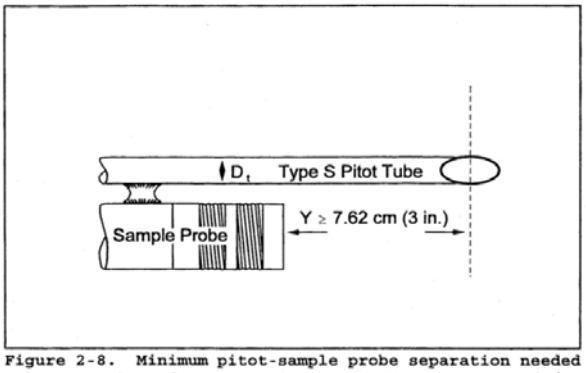

Figure 2-8. Minimum pitot-sample probe separation needed to prevent interference; D_t between 0.48 and 0.95 cm (3/16 and 3/8 in).

Distance "Y" : _____ (inch)

Correct configuration? NA

Y must be at least 3 inches

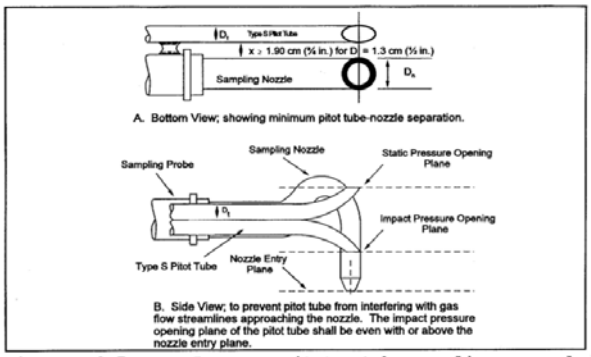

Figure 2-7. Proper pitot tube-sampling nozzle configuration.

Distance "X" : 0.1 (inch)

Must be ≥ 0.75 inches

Correct configuration? NA

© 2014 TRC Environmental Corp.

Top Loading Field Balance Check

Analyst:	-
Date:	-
Project Number:	-
Client:	-
Test Location:	-

(See SOP AM-CAL-009 for instructions)

Type of Scale	
Scale ID#	

Tolerance = +/- **0.5**

Individual Weight	Reference Weight Serial Number	Nominal Weight Value	Weight Found	Difference	Pass
W100	-	100.0			
W500A	-	500.0			
Combination Weights (Use whichever one corresponds to the scale's capacity)					
W100 + W500A	-	600.0			
	-				
W500A + W500B	-	1000.0			
	-				

© 2014 TRC Environmental Corp.

National Weather Service (NWS) Barometer Reading from Nearby Station or Local Airport

Analyst:	-
Date:	-
Project Number:	-
Client:	-
Test Location:	-

Location of NWS Station or Airport Barometer:	-	
:	-	in. Hg (Pbr)
Elevation of NWS Barometer (above Sea Level):	-	feet (A)
Absolute NWS Barometric Pressure:	-	in. Hg (Pbr)

(Station or Absolute Pbr is actual barometer reading at barometer elevation, uncorrected to sea level)

Elevation at Test Location (above Sea Level):	-	feet (B)
Elevation Difference:	-	feet (A-B)

Correction of NWS Barometric Pressure (Pbr) to Test Location

Pbr calc = Pbr + [0.001 x (A-B)]

Pbr calc - + (0.001 * -)

Pbr calc = -

Pbr Calculated (from above):	**-**	in. Hg

© 2014 TRC Environmental Corp.

Barometric Pressure Determination

Analyst:	-
Date:	-
Project Number:	-
Client:	-
Test Location:	-

Procedure: Use a NIST traceable field barometer for all field measurements. Bring the field barometer to the test location and allow 15 minutes for the instrument to stabilize. Take a measurement before and after each series of tests.

Date:	-
Barometer Serial Number:	-
Barometer Pressure Prior to Testing:	
Barometer Pressure After Testing:	-
Average Barometric Pressure:	

Add Day? No

Date:	-
Barometer Serial Number:	**-**
Barometer Pressure Prior to Testing:	
Barometer Pressure After Testing:	-
Average Barometric Pressure:	

Add Day? No

Date:	-
Barometer Serial Number:	**-**
Barometer Pressure Prior to Testing:	
Barometer Pressure After Testing:	-
Average Barometric Pressure:	

© 2014 TRC Environmental Corp.

Nozzle Calibration

Analyst:	-
Date:	-
Project Number:	-
Client:	-
Test Location:	-

(See SOP AM-CAL-007 for Instructions)

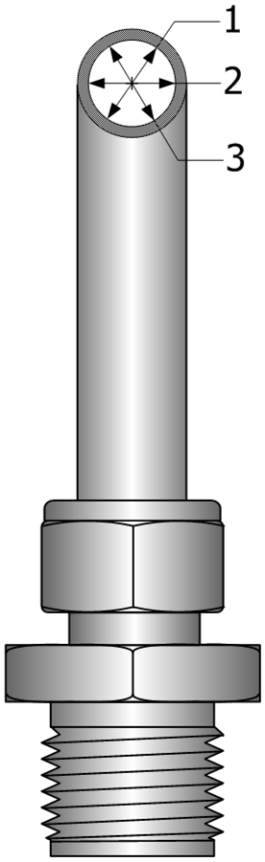

Nozzle ID No.: N/A

Maximum - Minimum ≤ 0.004 inches

Pre Test

	1
	2
	3

Average
#DIV/0!

© 2014 TRC Environmental Corp.