FINAL
SITE-SPECIFIC UFP QUALITY ASSURANCE PROJECT PLAN

BARTH SMELTING CORP. SITE
99 Chapel Street,
Newark, Essex County,
New Jersey 07105

Prepared By:

Removal Support Team 2
Weston Solutions, Inc.
Northeast Division
Edison, New Jersey 08837

DC No.: RST 2-02-F-2299
TDD No.: TO-0027-0097
EPA Contract No.: EP-W-06-072

February 2013

243403

TABLE OF CONTENTS

CROSSWALK 1
QAPP Worksheet #1: Title and Approval Page 4
QAPP Worksheet #2: QAPP Identifying Information 5
QAPP Worksheet #3: Distribution List 6
QAPP Worksheet #4: Project Personnel Sign-Off Sheet 7
QAPP Worksheet #5: Project Organizational Chart 8
QAPP Worksheet #6: Communication Pathways 9
QAPP Worksheet #7: Personnel Responsibilities and Qualifications Table 10
QAPP Worksheet #8: Special Personnel Training Requirements Table 11
QAPP Worksheet #9: Project Scoping Session Participants Sheet 12
QAPP Worksheet #10: Problem Definition 13
QAPP Worksheet #11: Project Quality Objectives/Systematic Planning Process Statement 15
QAPP Worksheet #12: Measurement Performance Criteria Table 16
QAPP Worksheet #13: Secondary Data Criteria and Limitations Table 17
QAPP Worksheet #14: Summary of Project Tasks 18
QAPP Worksheet #15: Reference Limits and Evaluation Table 21
QAPP Worksheet #16: Project Schedule/Timeline Table 22
QAPP Worksheet #17: Sampling Design and Rationale 24
QAPP Worksheet #17: Sampling Design and Rationale (concluded) 25
QAPP Worksheet #18: Sampling Locations and Methods/SOP Requirements Table 26
QAPP Worksheet #19: Analytical SOP Requirements Table 26
QAPP Worksheet #20: Field Quality Control Sample Summary Table 27
QAPP Worksheet #21: Project Sampling SOP References Table 28
QAPP Worksheet #22: Field Equipment Calibration, Maintenance, Testing, and Inspection Table 29
QAPP Worksheet #23: Analytical SOP References Table 30
QAPP Worksheet #24: Analytical Instrument Calibration Table 31
QAPP Worksheet #25: Analytical Instrument and Equipment Maintenance, Testing, and Inspection Table 32
QAPP Worksheet #26: Sample Handling System 33
QAPP Worksheet #27: Sample Custody Requirements 34
QAPP Worksheet #28: QC Samples Table 35
QAPP Worksheet #29: Project Documents and Records Table 37
QAPP Worksheet #30: Analytical Services Table 38
QAPP Worksheet #31: Planned Project Assessments Table 39
QAPP Worksheet #32: Assessment Findings and Corrective Action Responses 40
QAPP Worksheet #33: QA Management Reports Table 41
QAPP Worksheet #34: Verification (Step I) Process Table 42
QAPP Worksheet #34: Verification (Step I) Process Table (Concluded) 43
QAPP Worksheet #35: Validation (Steps IIa and IIb) Process Table 44
QAPP Worksheet #36: Validation (Steps IIa and IIb) Summary Table 46
QAPP Worksheet #37: Usability Assessment 47

LIST OF ATTACHMENTS

ATTACHMENT A: Figure 1 - Site Location Map and Proposed Sample Location Map
Figure 2 - Proposed Sample Location Map

ATTACHMENT B: Sampling SOPs
- EPA/ERT SOP# 2001
- EPA/ERT SOP# 2006
- EPA/ERT SOP# 2012

LIST OF ACRONYMS

ADR	Automated Data Review
ANSETS	Analytical Services Tracking System
AOC	Acknowledgment of Completion
ASTM	American Society for Testing and Materials
CEO	Chief Executive Officer
CERCLA	Comprehensive Environmental Response, Compensation and Liability Act
CLP	Contract Laboratory Program
CFM	Contract Financial Manager
CO	Contract Officer
COI	Conflict of Interest
COO	Chief Operations Officer
CRDL	Contract Required Detection Limit
CRTL	Core Response Team Leader
CRQL	Contract Required Quantitation Limit
CQLOSS	Corporate Quality Leadership and Operations Support Services
CWA	Clean Water Act
DCN	Document Control Number
DESA	Division of Environmental Science and Assessment
DI	Deionized Water
DPO	Deputy Project Officer
DQI	Data Quality Indicator
DQO	Data Quality Objective
EM	Equipment Manager
EDD	Electronic Data deliverable
ENVL	Environmental Unit Leader
EPA	Environmental Protection Agency
ERT	Environmental Response Team
FASTAC	Field and Analytical Services Teaming Advisory Committee
GC/ECD	Gas Chromatography/Electron Capture Detector
GC/MS	Gas Chromatography/Mass Spectrometry
HASP	Health and Safety Plan
HRS	Hazard Ranking System
HSO	Health and Safety Officer
ITM	Information Technology Manager
LEL	Lower Explosive Limit
MSA	Mine Safety Appliances
MS/MSD	Matrix Spike/Matrix Spike Duplicate
NELAC	National Environmental Laboratory Accreditation Conference
NELAP	National Environmental Laboratory Accreditation Program
NIOSH	National Institute for Occupational Safety and Health
NIST	National Institute of Standards and Technology
OSC	On-Scene Coordinator
OSHA	Occupational Safety and Health Administration

LIST OF ACRONYMS (Concluded)

OSWER	Office of Solid Waste and Emergency Response
PARCCS	Precision, Accuracy, Representativeness, Completeness, Comparability, Sensitivity
PAH	Polynuclear Aromatic Hydrocarbons
PCB	Polychlorinated Biphenyls
PIO	Public Information Officer
PM	Program Manager
PO	Project Officer
PRP	Potentially Responsible Party
PT	Proficiency Testing
QA	Quality Assurance
QAL	Quality Assurance Leader
QAPP	Quality Assurance Project Plan
QMP	Quality Management Plan
QA/QC	Quality Assurance/Quality Control
QC	Quality Control
RC	Readiness Coordinator
RCRA	Resource Conservation and Recovery Act
RPD	Relative Percent Difference
RSCC	Regional Sample Control Coordinator
RST	Removal Support Team
SARA	Superfund Amendments and Reauthorization Act
SEDD	Staged Electronic Data Deliverable
SOP	Standard Operating Practice
SOW	Statement of Work
SPM	Site Project Manager
START	Superfund Technical Assessment and Response Team
STR	Sampling Trip Report
TAL	Target Analyte List
TCL	Total Compound List
TDD	Technical Direction Document
TDL	Technical Direction Letter
TO	Task Order
TQM	Total Quality Management
TSCA	Toxic Substances Control Act
UFP	Uniform Federal Policy
VOA	Volatile Organic Analysis

CROSSWALK

The following table provides a "cross-walk" between the QAPP elements outlined in the Uniform Federal Policy for Quality Assurance Project Plans (UFP-QAPP Manual), the necessary information, and the location of the information within the text document and corresponding QAPP Worksheet. Any QAPP elements and required information that are not applicable to the project are circled.

QAPP Element(s) and Corresponding Section(s) of UFP-QAPP Manual		Required Information	Crosswalk to QAPP Section	Crosswalk to QAPP Worksheet No.
Project Management and Objectives				
2.1	Title and Approval Page	- Title and Approval Page	Approval Page	1
2.2	Document Format and Table of Contents 2.2.1 Document Control Format 2.2.2 Document Control Numbering System 2.2.3 Table of Contents 2.2.4 QAPP Identifying Information	- Table of Contents - QAPP Identifying Information	TOC Approval Page	2
2.3	Distribution List and Project Personnel Sign-Off Sheet 2.3.1 Distribution List 2.3.2 Project Personnel Sign-Off Sheet	- Distribution List - Project Personnel Sign-Off Sheet	Approval Page	3 4
2.4	Project Organization 2.4.1 Project Organizational Chart 2.4.2 Communication Pathways 2.4.3 Personnel Responsibilities and Qualifications 2.4.4 Special Training Requirements and Certification	- Project Organizational Chart - Communication Pathways - Personnel Responsibilities and Qualifications - Special Personnel Training Requirements	2	5 6 7 8
2.5	Project Planning/Problem Definition 2.5.1 Project Planning (Scoping) 2.5.2 Problem Definition, Site History, and Background	- Project Planning Session Documentation (including Data Needs tables) - Project Scoping Session Participants Sheet - Problem Definition, Site History, and Background - Site Maps (historical and present)	1	9 10
2.6	Project Quality Objectives and Measurement Performance Criteria 2.6.1 Development of Project Quality Objectives Using the Systematic Planning Process 2.6.2 Measurement Performance Criteria	- Site-Specific PQOs - Measurement Performance Criteria	3	11 12
2.7	Secondary Data Evaluation	- Sources of Secondary Data and Information - Secondary Data Criteria and Limitations	1 2	13

QAPP Element(s) and Corresponding Section(s) of UFP-QAPP Manual	Required Information	Crosswalk to QAPP Section	Crosswalk to QAPP Worksheet No.
2.8 Project Overview and Schedule 2.8.1 Project Overview 2.8.2 Project Schedule	- Summary of Project Tasks - Reference Limits and Evaluation - Project Schedule/Timeline	4	14 15 16
Measurement/Data Acquisition			
3.1 Sampling Tasks 3.1.1 Sampling Process Design and Rationale 3.1.2 Sampling Procedures and Requirements 3.1.2.1 Sampling Collection Procedures 3.1.2.2 Sample Containers, Volume, and Preservation 3.1.2.3 Equipment/Sample Containers Cleaning and Decontamination Procedures 3.1.2.4 Field Equipment Calibration, Maintenance, Testing, and Inspection Procedures 3.1.2.5 Supply Inspection and Acceptance Procedures 3.1.2.6 Field Documentation Procedures	- Sampling Design and Rationale - Sample Location Map - Sampling Locations and Methods/SOP Requirements - Analytical Methods/SOP Requirements - Field Quality Control Sample Summary - Sampling SOPs - Project Sampling SOP References - Field Equipment Calibration, Maintenance, Testing, and Inspection	5	17 18 19 20 21 22
3.2 Analytical Tasks 3.2.1 Analytical SOPs 3.2.2 Analytical Instrument Calibration Procedures 3.2.3 Analytical Instrument and Equipment Maintenance, Testing, and Inspection Procedures 3.2.4 Analytical Supply Inspection and Acceptance Procedures	- Analytical SOPs - Analytical SOP References - Analytical Instrument Calibration - Analytical Instrument and Equipment Maintenance, Testing, and Inspection	6	23 24 25
3.3 Sample Collection Documentation, Handling, Tracking, and Custody Procedures 3.3.1 Sample Collection Documentation 3.3.2 Sample Handling and Tracking System 3.3.3 Sample Custody	- Sample Collection Documentation Handling, Tracking, and Custody SOPs - Sample Container Identification - Sample Handling Flow Diagram - Example Chain-of-Custody Form and Seal	7	26 27

QAPP Element(s) and Corresponding Section(s) of UFP-QAPP Manual	Required Information	Crosswalk to QAPP Section	Crosswalk to QAPP Worksheet No.
3.4 Quality Control Samples 3.4.1 Sampling Quality Control Samples 3.4.2 Analytical Quality Control Samples	- QC Samples - Screening/Confirmatory Analysis Decision Tree	5	28
3.5 Data Management Tasks 3.5.1 Project Documentation and Records 3.5.2 Data Package Deliverables 3.5.3 Data Reporting Formats 3.5.4 Data Handling and Management 3.5.5 Data Tracking and Control	- Project Documents and Records - Analytical Services - Data Management SOPs	6	29 30
Assessment/Oversight			
4.1 Assessments and Response Actions 4.1.1 Planned Assessments 4.1.2 Assessment Findings and Corrective Action Responses	- Assessments and Response Actions - Planned Project Assessments - Audit Checklists - Assessment Findings and Corrective Action Responses	8	31 32
4.2 QA Management Reports	- QA Management Reports		33
4.3 Final Project Report	- Final Report(s)		
Data Review			
5.1 Overview			
5.2 Data Review Steps 5.2.1 Step I: Verification 5.2.2 Step II: Validation 5.2.2.1 Step IIa Validation Activities 5.2.2.2 Step IIb Validation Activities 5.2.3 Step III: Usability Assessment 5.2.3.1 Data Limitations and Actions from Usability Assessment 5.2.3.2 Activities	- Verification (Step I) Process - Validation (Steps IIa and IIb) Process - Validation (Steps IIa and IIb) Summary - Usability Assessment	9	34 35 36 37

QAPP Worksheet #1: Title and Approval Page

Title: Site-Specific UFP Quality Assurance Project Plan (QAPP)
Site Name/Project Name: Barth Smelting Corp. Site
Site Location: 99 Chapel Street, Newark, Essex County, New Jersey
Revision Number: 00
Revision Date: Not Applicable

Weston Solutions, Inc
Lead Organization

Dipanjali Chavan
Weston Solutions, Inc.
1090 King Georges Post Road, Suite 201
Edison, NJ 08837
Email: Dipanjali.chavan@westonsolutions.com
Preparer's Name and Organizational Affiliation

20 February 2013
Preparation Date (Day/Month/Year)

Site Project Manager: _____
Signature

Scott Snyder/Weston Solutions, Inc.
Printed Name/Organization/Date

QA Officer/Technical Reviewer: _____
Signature
Smita Sumbaly/Weston Solution, Inc.
Printed Name/Organization/Date

EPA, Region II On-Scene Coordinator (OSC): _____
Signature

Kimberly Staiger /EPA, Region II
Printed Name/Organization/Date

EPA, Region II Quality Assurance Officer (QAO): _____
Signature

Printed Name/Organization/Date

Document Control Number: RST 2-02-F-2299

QAPP Worksheet #2: QAPP Identifying Information

Site Name/Project Name: Barth Smelting Corp. Site
Site Location: 99 Chapel Street, Newark, Essex County, New Jersey
Operable Unit: 00
Title: Site-Specific UFP QAPP
Revision Number: 00
Revision Date: Not Applicable

1. **Identify guidance used to prepare QAPP:**
   Uniform Federal Policy for Quality Assurance Project Plans. Refer to DESA Methods.

2. **Identify regulatory program:** EPA, Region II

3. **Identify approval entity:** EPA, Region II

4. **Indicate whether the QAPP is a generic or a <u>site-specific</u> QAPP.**

5. **List dates of scoping sessions that were held:** 10/9/2012, 2/7/2013

6. **List dates and titles of QAPP documents written for previous site work, if applicable:**

   None

7. **List organizational partners (stakeholders) and connection with lead organization:**

   None

8. **If any required QAPP elements and required information are not applicable to the project, then provide an explanation for their exclusion below:**

   None

9. **Document Control Number:** RST 2-02-F-2299

QAPP Worksheet #3: Distribution List

[List those entities to which copies of the approved site-specific QAPP, subsequent QAPP revisions, addenda, and amendments are sent]

QAPP Recipient	Title	Organization	Telephone Number	Fax Number	E-mail Address	Document Control Number
Kimberly Staiger	OSC	EPA, Region II	(732) 452-6415	(732) 906-6182	Staiger.Kimberly@epa.gov	RST 2-02-F-2299
Timothy Benton	HSO	Weston Sol utions, Inc., RST 2	(732) 585-4425	(732) 225-7037	Tim.Benton@westonsolutions.com	RST 2-02-F-2299
Smita Sumbaly	QAO	Weston Solutions, Inc., RST 2	(732) 585-4410	(732) 225-7037	S.Sumbaly@westonsolutions.com	RST 2-02-F-2299
Scott Snyder	SPM	Weston Solutions, Inc., RST 2	(732) 585-4441	(732) 225-7037	S.Snyders@westonsolutions.com	RST 2-02-F-2299
Site TDD File	RST 2 Site TDD File	Weston Solutions, Inc., RST 2	Not Applicable	Not Applicable	Not Applicable	RST 2-02-F-2299

QAPP Worksheet #4: Project Personnel Sign-Off Sheet

[Copies of this form signed by key project personnel from each organization to indicate that they have read the applicable sections of the site-specific QAPP and will perform the tasks as described; add additional sheets as required. Ask each organization to forward signed sheets to the central project file.]

Organization: Weston Solutions, Inc., RST 2

Project Personnel	Title	Telephone Number	Signature	Date QAPP Read
Kimberly Staiger	EPA, Region II, OSC	(732) 452-6415		
Timothy Benton	HSO, RST 2	(732) 585-4425		
Smita Sumbaly	QAO, RST 2	(732) 585-4410		
Scott Snyder	SPM, Field Personnel, RST 2	(732) 585-4441		
Lionel Montanez	Field Personnel, RST 2	(732) 585-4436		
Dipanjali Chavan	Field Personnel, RST 2	(732) 585-4437		

QAPP Worksheet #5: Project Organizational Chart

Identify reporting relationship between all organizations involved in the project, including the lead organization and all contractor and subcontractor organizations. Identify the organizations providing field sampling, on-site and off-site analysis, and data review services, including the names and telephone numbers of all project managers, project team members, and/or project contacts for each organization.

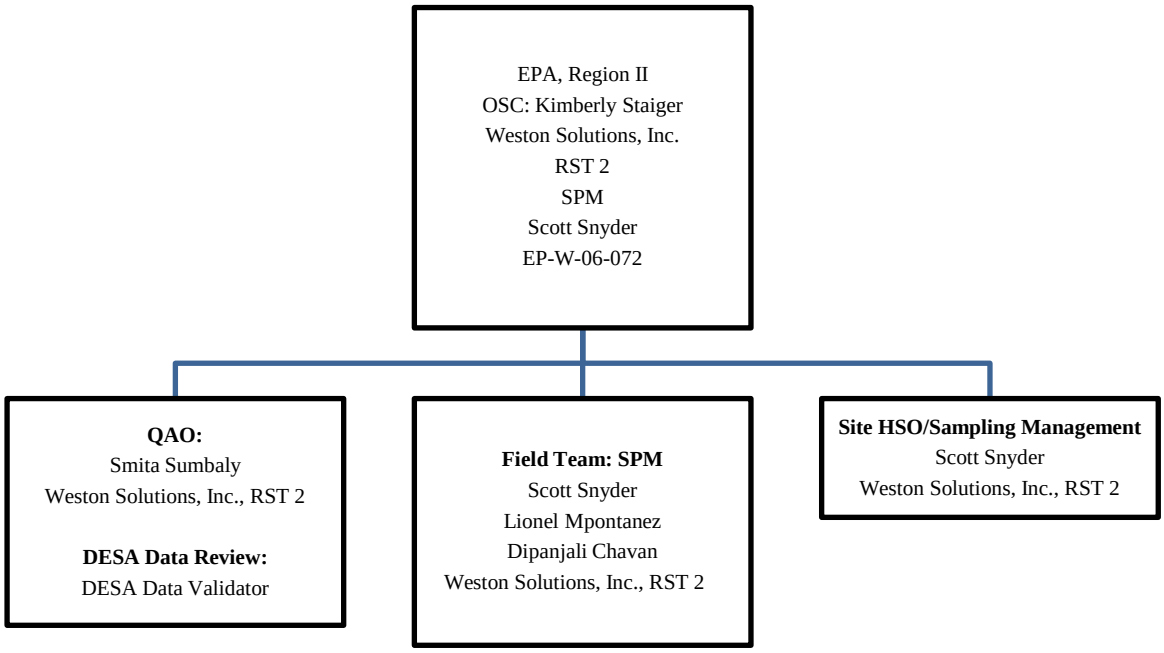

Acronyms:

EPA – U.S. Environmental Protection Agency
HSO – Health & Safety Officer
OSC – On-Scene Coordinator
QAO – Quality Assurance Officer
RST – Removal Support Team
SPM – Site Project Manager
DESA - Division of Environmental Science and Assessment

QAPP Worksheet #6: Communication Pathways

Communication Drivers	Responsible Entity	Name	Phone Number	Procedure
Point of contact with EPA OSC	SPM, Weston Solutions, Inc., RST 2	Scott Snyder	(732) 585-4441	All technical, QA and decision-making matters in regard to the project (verbal, written or electronic)
Adjustments to QAPP	SPM, Weston Solutions, Inc., RST 2	Scott Snyder	(732) 585-4441	QAPP approval dialogue
Health and Safety On-Site Meeting	HSO, Weston Solutions, Inc., RST 2	Scott Snyder	(732) 585-4441	Explain/review site hazards, personnel protective equipment, hospital location, etc.

EPA – U.S. Environmental Protection Agency
HSO – Health and Safety Officer
OSC – On-Scene Coordinator
QA – Quality Assurance
QAPP – Quality Assurance Project Plan
RST – Removal Support Team
SPM – Site Project Manager

QAPP Worksheet #7: Personnel Responsibilities and Qualifications Table

Name	Title	Organizational Affiliation	Responsibilities	Education and Experience Qualifications
Kimberly Staiger	EPA OSC	EPA, Region II	All project coordination, direction and decision making.	NA
Scott Snyder	SPM, HSO, Technical Reviewer, RST 2	Weston Solutions, Inc.	Implementing and executing the technical, QA and health and safety during sampling event and sample collection and management.	12 years*
Lionel Montanez	Field Personnel, RST 2	Weston Solutions, Inc.	Sample collection and management	8 Years*
Dipanjali Chavan	Field Personnel, RST 2	Weston Solutions, Inc.	Sample collection and management	6 Years*

*All RST 2 members, including subcontractor's resumes are in possession of RST 2 Program Manager, EPA Project Officer, and Contracting Officers.

QAPP Worksheet #8: Special Personnel Training Requirements Table

Project Function	Specialized Training By Title or Description of Course	Training Provider	Training Date	Personnel / Groups Receiving Training	Personnel Titles / Organizational Affiliation	Location of Training Records / Certificates[1]
[Specify location of training records and certificates for samplers]						
QAPP Training	This training is presented to all RST 2 personnel to introduce the provisions, requirements, and responsibilities detailed in the UFP QAPP. The training presents the relationship between the site-specific QAPPs, SOPs, work plans, and the Generic QAPP. QAPP refresher training will be presented to all employees following a major QAPP revision.	Weston Solutions, Inc., QAO	As needed	All RST 2 field personnel upon initial employment and as refresher training	Weston Solutions, Inc.	Weston Solutions, Inc., EHS Database
Health and Safety Training	Health and safety training will be provided to ensure compliance with Occupational Safety and Health Administration (OSHA) as established in 29 CFR 1910.120.	Weston Solutions, Inc., HSO	Yearly at a minimum	All Employees upon initial employment and as refresher training every year	Weston Solutions, Inc.	Weston Solutions, Inc., EHS Database
Others	Scribe, ICS 100 and 200, and Air Monitoring Equipment Trainings provided to all employees	Weston Solutions, Inc., QAO/Group Leader's	Upon initial employment and as needed			
	Dangerous Goods Shipping	Weston Solutions, Inc., HSO	Every 2 years			

All team members are trained in the concepts and procedures in recognizing opportunities for continual improvement, and the approaches required to improve procedures while maintaining conformance with legal, technical, and contractual obligations.

[1] All RST 2 members, including subcontractor's certifications are in possession of RST 2 HSO.

QAPP Worksheet #9: Project Scoping Session Participants Sheet

Site Name/Project Name: Barth Smelting Corp. Site
Site Location: 99 Chapel Street, Newark, Essex County, New Jersey
Operable Unit: 00
Date of Sessions: 1/31/2013
Scoping Session Purpose: To discuss questions, comments, and assumptions regarding technical issues involved with the Removal Action for the Site.

Name	Title	Affiliation	Phone #	E-mail Address	*Project Role
Kimberly Staiger	EPA OSC	EPA, Region II	(732) 452-6415	Staiger.Kimberly@epa.gov	OSC
Scott Snyder	Principal Project Scientist	Weston Solutions, Inc., RST 2	(732) 585-4441	S.Snyder@westonsolutions.com	SPM

Comments/Decisions: As part of the Removal Assessment, Weston Solutions, Inc., Removal Support Team 2 (RST 2) is tasked with the advancement of 10 bore holes to the depth of 2 feet (ft) below ground surface (bgs) and collection of up to 53 grab soil samples (one sample at the intervals of 0-1, 6-12, 12-18, and 18-24 inches), including Quality Assurance/Quality Control (QA/QC) samples, from the former Barth Smelting facility (the Site). Sampling will tentatively begin on February 27, 2013. The samples will be collected to determine if operations at the former Barth Smelting facility have impacted the soils within the footprint of the facility. The soil samples collected will be screened for lead and be submitted to the U.S. EPA, DESA laboratory for Target Analyte List (TAL) metals, mercury, and tin analysis. The soil samples will be collected for a definitive data QA Objective. Field duplicate and Matrix Spike/ Matrix Spike Duplicate (MS/MSD) samples will be collected at a rate of one per day for soil sampling. Soil samples collected from the 0-1 inch interval will be designated for sieving with a 250-micron stainless steel sieve and pan. All soils samples will be field screened using an X-ray fluorescent (XRF) unit for lead, with all results being recorded in the logbook. Field screening for lead in soil will be performed using portable XRF technology for all samples. Screening will take place either on-site or at a nearby command post. The samples will be collected in a 6 by 9 inch plastic bag, homogenized, and analyzed three times using the XRF. Each XRF sample screening interval will last 60 seconds. The three screening intervals will then be averaged to determine the lead concentration. Soil samples will be collected in 4-oz. jars (as requested by the lab).

Action Items: The CLP Request Form was submitted by RST 2 for laboratory procurement on February 1, 2013.

Consensus Decisions: Soil sampling at the Site will commence on February 27, 2013.

QAPP Worksheet #10: Problem Definition

PROBLEM DEFINITION

The soil sampling to be conducted as part of the EPA Removal Assessment at the Site is scheduled to begin on February 27, 2013. As part of the Removal Assessment sampling event, RST 2 is tasked with the collection of soil samples from the former Barth Smelting facility. The analytical data from this investigation will be used to assist the EPA in determining the nature and extent of contaminated soil on the Site that was once occupied by Barth Smelting Corp. If elevated concentrations of lead are detected in the soil samples, addition removal activities may be conducted.

SITE HISTORY/CONDITIONS

Barth Smelting Corp. operated on the Site from approximately 1946 to 1982, as secondary copper smelter. Barth produced brass and bronze ingots and worked with non-ferrous metals. The Site is located in the Ironbound Section of Newark, New Jersey, adjacent to the Passaic River. The Ironbound section of Newark is historically an industrialized neighborhood. The area of the Site has been industrialized since the late 1800s. The Site is currently occupied by various maritime shipping and maintenance facilities. A residential area consisting of an apartment complex operated by the City of Newark Housing Authority is located to the south. A playground and grass-covered play area are located on housing authority property just beyond the fence that separates the Site and the apartment complex. Additional residential properties are located across Chapel Street to the east.

PROJECT DESCRIPTION

In order to characterize on-site soils, RST 2 has been tasked with the collection of up to 53 soil samples (including three duplicate samples) in support of the EPA Removal Assessment of the Site. The soil samples will be collected from 10 test borings arranged in a grid pattern that covers the footprint of the former Barth Smelting Corp. facility. Any asphalt present will be penetrated by mechanical methods (e.g., a chop saw or similar method). Soil beneath the asphalt will be obtained by a hand auger and/or a subsurface manual soil probe. The samples will be screened in the field using an XRF analyzer. Samples will also be analyzed by an off-site laboratory for TAL metals, mercury, and tin. The date the on-site work is scheduled to begin is February 27, 2013.

QAPP Worksheet #10: Problem Definition (Concluded)

OBSERVATION FROM ANY SITE RECONNAISSANCE REPORT

On December 3, 2012, RST 2 conducted field screening activities for lead based paint for playground equipments at Terrell Homes playground located in between the Site and the adjacent apartment complex. Field screening for lead in playground equipment paints was conducted using a portable XRF analyzer. Total of 13 lead readings including two to three readings for each of the playground equipment and cinderblock wall separating the Site and playground were recorded. Based on the field screening results, lead was detected at concentrations ranging from 0.05 to 0.19 milligrams per square centimeter (mg/cm^2) for the playground equipment #1. For playground equipment #2, the lead concentrations ranged from 0.01 to 0.18 mg/cm^2. No lead was detected in paints in the playground equipment #3. Lead was detected at a concentration of 0.01 mg/cm^2 at one of the screening locations on the cinderblock wall located behind the play area. The U.S. Department of Housing and Urban Development (HUD) *Guidelines for the Evaluation and Control of Lead-Based Paint Hazards in Housing*, dated July 2012, Action Level for lead in paint is 1 mg/cm^2.

From December 3 through 6, 2012, WESTON Site Assessment Team (SAT) collected a total of 150 surface and subsurface soil samples from the Terrell Homes playground, adjacent to the former Barth Smelting Site; from two residential properties along Chapel Street; and from two background locations outside of the influence of site activities. The samples collected from Redemptoris Mater Seminary in Kearny and Lincoln Park in Newark served to document background conditions. At each sample location soil samples were collected at depth intervals of 0-1 inches, 1-6 inches, 6-12 inches, 12-18 inches, and 18-24 inches. All soil samples were submitted for analysis of TAL Inorganics (including mercury and tin). Soil samples collected from the 0-1 inch interval were designated for sieving by EPA MAL with a 250-micron stainless steel sieve and pan. Based on preliminary data, elevated levels of lead are present in the playground soils and in the residential backyards (data is still preliminary and not validated).

Further soil investigation is required to determine the extent of lead contamination at the Site.

PROJECT DECISION STATEMENTS

Analytical data will be compared with New Jersey Department of Environmental Protection's (NJDEP) Non- Residential Direct Contact Soil Cleanup Criteria and EPA Removal Management Levels (RML). EPA will use the analytical data from this investigation to determine if operations at Barth contaminated soils on Site and to determine if a removal action is required.

QAPP Worksheet #11: Project Quality Objectives/Systematic Planning Process Statement

Overall project objectives include: Sampling will be conducted by RST 2 to determine if the soil on the Site contains elevated concentrations of lead and other metals.

Who will use the data? Data will be used by the EPA, Region II OSC.

What will the data be used for? The analytical data from this investigation will be used to assist the EPA in determining the nature and extent of lead contamination and whether the soil on the Site contains elevated concentrations of metals requiring a removal action.

What types of data are needed?

Matrix:	Soil samples
Type of Data:	Definitive data for soil samples
Analytical Techniques:	Off-site laboratory analyses
Parameters:	TAL Metals, Mercury, and Tin
Type of sampling equipment:	Plastic scoops, aluminum pie tins, sample jars, and ziplock bags
Access Agreement:	Obtained by EPA, Region II OSC.
Sampling locations:	The location of the soil samples will be collected from the excavation areas on the properties and will be determined by the OSC.

How much data are needed? Up to 53 soil samples (including three field duplicate samples) are anticipated to be collected from sample locations throughout the Site. The samples collected will be screened by XRF and samples will be submitted for laboratory analysis.

How "good" does the data need to be in order to support the environmental decision? Sampling/analytical measurement performance criteria for Precision, Accuracy, Representativeness, Completeness, and Comparability (PARCC) parameters will be established. Refer to Worksheet #12, criteria for performance measurement for definitive data.

Where, when, and how should the data be collected/generated? The soil samples to be collected from the Site have been determined/approved by the EPA OSC. All samples will be collected using methods outlined in the Standard Operating Procedures (SOPs). The sampling event is scheduled to begin on February 27, 2013.

Who will collect and generate the data? The soil samples will be collected by RST 2. Samples will be analyzed by the EPA DESA laboratory and validated by EPA DESA data validators.

How will the data be reported? All data will be reported by the assigned laboratory (Preliminary, Electronic, and Hard Copy format). The SPM will provide a STR, Status Reports, Maps/Figures, Analytical Report, and Data Validation Report to the EPA OSC.

How will the data be archived? Electronic data deliverables (EDDs) will be archived in a Scribe database.

QAPP Worksheet #12: Measurement Performance Criteria Table

Complete this worksheet for each matrix, analytical group, and concentration level. Identify the data quality indicators (DQI), measurement performance criteria (MPC) and QC sample and/or activity used to assess the measurement performance for both the sampling and analytical measurement systems. Use additional worksheets if necessary. If MPC for specific DQI vary within an analytical parameter, i.e., MPC are analyte-specific, then provide analyte-specific MPC on an additional worksheet.

Matrix	Soil[1] / Aqueous[2]
Analytical Group	TAL Metals, Mercury & Tin
Concentration Level	Low/Medium

Sampling Procedure	Analytical Method/SOP	Data Quality Indicators (DQIs)	Measurement Performance Criteria	QC Sample and/or Activity Used to Assess Measurement Performance	QC Sample Assesses Error for Sampling (S), Analytical (A) or both (S&A)
NA	C-109, C-110 (Ref: EPA 200.7, 200.8, 245.1)	Precision	% RPD < 20(Aq), % RPD <25(Soil)	LCS Duplicate	A
		Accuracy	Limits: Average Recovery ± 20% aqueous, ± 25% Soil)	LCS	A
		Accuracy	± 20% aqueous, ± 25% Soil)	Matrix spike	A
		Precision	< RL Except for Al, Fe, Ca, K, Mg and Na	Interference Check Sample(ICP/AES)	A
		Accuracy	< RL	Method Blank	A
		Precision	RPD < 20 %	Serial Dilution Test(ICP/AES)	A
		Accuracy	Range of 0.60-1.87 of the original response in the calibration blank	Internal Standards(ICP-MS)	A

1 Reference number from QAPP Worksheet #2 & #23
2 Aqueous samples will consist of rinsate blank samples only. Aqueous field duplicate and MS/MSD samples will not be collected.

QAPP Worksheet #13: Secondary Data Criteria and Limitations Table

Any data needed for project implementation or decision making that are obtained from non-direct measurement sources such as computer databases, background information, technologies and methods, environmental indicator data, publications, photographs, topographical maps, literature files and historical data bases will be compared to the DQOs for the project to determine the acceptability of the data. Thus, for example, analytical data from historical surveys will be evaluated to determine whether they satisfy the validation criteria for the project and to determine whether sufficient data was provided to allow an appropriate validation to be done. If not, then a decision to conduct additional sampling for the site may be necessary.

Secondary Data	Data Source (Originating Organization, Report Title, and Date)	Data Generator(s) (Originating Org., Data Types, Data Generation/ Collection Dates)	How Data May Be Used (if deemed usable during data assessment stage)	Limitations on Data Use
EPA Soil Investigation	Soil sampling events from February 27, 201 through February 28, 2013	Weston Solutions (RST 2)	To determine the nature and extent of lead and other metals impact within the former property boundaries of the Barth Smelting Corp.	NA

QAPP Worksheet #14: Summary of Project Tasks

Sampling Tasks:

As part of the Removal Assessment, RST 2 is tasked with the collection of up to 53 grab soil samples, including QA/QC samples, from the former Barth Smelting facility location at the Site. Sampling will tentatively begin on February 27, 2013. The samples will be collected to determine the extent of lead and other metals in soils throughout the Site. The soil samples will be collected from 10 test borings arranged in a grid pattern that covers the footprint of the former Barth Smelting Corp. facility. The soil samples will be collected at the intervals of 0-1, 1-6, 6-12, 12-18, and 18-24 inches bgs. The soil samples collected will be screened and be submitted to the EPA DESA laboratory for TAL metals, mercury, and tin analysis. The soil samples will be collected for a definitive data QA Objective. Field duplicate and MS/MSD samples will be collected at a rate of one per day of soil sampling. Soil samples collected from the 0-1 inch interval will be designated for sieving with a 250-micron stainless steel sieve and pan. All soils samples will be field screened using an XRF unit for lead, with all results being recorded in the site logbook. Field screening for lead in soil will be performed using portable XRF technology for all samples. Screening will take place either on-site or at a nearby command post. The samples will be collected in a 6 by 9 inch plastic bag, homogenized, and analyzed three times using the XRF. Organic debris will be removed from the sample before it is homogenized. Each XRF sample screening interval will last 60 seconds. The three screening intervals will then be averaged to determine the lead concentration. Soil samples will be collected in 4-oz. jars.

Analysis Tasks:

Soil – Total Metal and Tin analysis – C-109
Soil – Mercury analysis – C -110

Quality Control Tasks:

The soil samples will be collected for definitive data QA objective. Field duplicate and MS/MSD samples will be collected at a rate of one per property for soil samples (if samples exceed 20 per property, collect every 20).

QAPP Worksheet #14: Summary of Project Tasks (Continued)

Data Management Tasks:

Activities under this project will be reported in status and trip reports and other deliverables (e.g., analytical reports, final reports) described herein. Activities will also be summarized in appropriate format for inclusion in monthly and annual reports.

The following deliverables will be provided under this project:

Trip Report: A trip report will be prepared to provide a detailed accounting of what occurred during each sampling mobilization. The trip report will be prepared within two weeks of the last day of each sampling mobilization. Information will be provided on time of major events, dates, and personnel on-site (including affiliations). Tentatively to be provided March 14, 2013.

Maps/Figures: Maps depicting site layout, contaminant source areas, and sample locations will be included in the trip report, as appropriate.

Analytical Report: An analytical report will be prepared for samples analyzed under this plan. This is to be provided two weeks after receiving validated data. Information regarding the analytical methods or procedures employed, sample results, QA/QC results, chain-of-custody (COC) documentation, laboratory correspondence, and raw data will be provided within this deliverable.

Data Review: A review of the data generated under this plan will be undertaken. The assessment of data acceptability or usability will be provided separately, or as part of the analytical report.

Documentation and Records:

All sample documents will be completed legibly, in ink. Any corrections or revisions will be made by lining through the incorrect entry and by initialing the error.

Field Logbook: The field logbook is essentially a descriptive notebook detailing site activities and observations so that an accurate account of field procedures can be reconstructed in the writer's absence. Field logbook will be bound and paginated. All entries will be dated and signed by the individuals making the entries, and should include (at a minimum) the following

1. Site name and project number
2. Name(s) of personnel on-site
3. Dates and times of all entries (military time preferred)
4. Descriptions of all site activities, site entry and exit times
5. Noteworthy events and discussions
6. Weather conditions
7. Site observations
8. Sample and sample location identification and description*
9. Subcontractor information and names of on-site personnel

QAPP Worksheet #14: Summary of Project Tasks (Concluded)

10. Date and time of sample collections, along with COC information
11. Record of photographs
12. Site sketches

* The description of the sample location will be noted in such a manner as to allow the reader to reproduce the location in the field at a later date.

Sample Labels: Sample labels will clearly identify the particular sample, and should include the following:

1. Site/project number.
2. Sample identification number.
3. Sample collection date and time.
4. Designation of sample (grab or composite).
5. Sample preservation.
6. Analytical parameters.
7. Name of sampler.

Sample labels will be written in indelible ink and securely affixed to the sample container. Tie-on labels can be used if properly secured.

Custody Seals: Custody seals demonstrate that a sample container has not been tampered with or opened. The individual in possession of the sample(s) will sign and date the seal, affixing it in such a manner that the container cannot be opened without breaking the seal. The name of this individual, along with a description of the sample packaging, will be noted in the field logbook.

Assessment/Audit Tasks: No performance audit of field operations is anticipated at this time. If conducted, performance and system audit will be in accordance with the project plan.

Data Review Tasks: All data will be validated by EPA DESA data validators.

Definitive data projects: The data generated under this QA/QC Sampling Plan will be evaluated according to guidance in the Uniform Federal Policy for Implementing Environmental Quality Systems: Evaluating, Assessing and Documenting Environmental Data Collection and Use Programs Part 1: UFP-QAPP (EPA-505-B-04-900A, March 2005); Part 2B: Quality Assurance/Quality Control Compendium: Minimum QA/QC Activities (EPA-505-B-04-900B, March 2005).

Laboratory analytical results will be assessed by the data reviewer for compliance with required precision, accuracy, completeness, representativeness, and sensitivity.

QAPP Worksheet #15: Reference Limits and Evaluation Table

Matrix: Soil
Analytical Group: Total Metals, Mercury and Tin
Concentration Level: Medium

Analyte	CAS Number	NJDEP Soil Cleanup Criteria – Non Residential (mg/kg)**	USEPA Removal Management Levels (Industrial Soil) Carcinogenic Target Risk (Ingestion) (mg/kg)	Project Quantitation Limit[3]	Method CRQLs (mg/kg)	Achievable Laboratory (DESA) Limits MDLs (mg/kg)	RLs (mg/kg)
Aluminum	7429-90-5	NA	3,000,000	NS	20	*	100
Antimony	7440-36-0	340	120	NS	6	0.22	2
Arsenic	7440-38-2	20	160	NS	1	0.35	0.8
Barium	7440-39-3	47,000	570,000	NS	20	0.24	10
Beryillum	7440-41-7	NA	6,000	NS	0.5	0.02	0.3
Cadmium	7440-43-9	100	2,400	NS	0.5	0.02	0.3
Calcium	7440-70-2	NA	NS	NS	500	12.57	50
Chromium	7440-47-3	NA	NS	NS	1	0.34	0.5
Cobalt	7440-48-4	NA	910	NS	5	0.03	2
Copper	7440-50-8	600	120,000	NS	2.5	0.26	1
Iron	7439-89-6	NA	2,100,000	NS	10	*	5
Lead	7439-92-1	600	800	NS	1	0.23	0.8
Magnesium	7439-95-4	NA	NS	NS	500	5.06	50
Manganese	7439-96-5	NA	68,000	NS	1.5	0.33	0.5
Mercury	7439-97-6	270	130	NS	0.1	.0043	0.05
Nickel	7440-02-0	2,400	59,000	NS	4	0.09	2
Potassium	7440-09-7	NA	NS	NS	500	12.36	50
Selenium	7782-49-2	3,100	15,000	NS	3.5	0.22	2
Silver	7440-22-4	4,100	15,000	NS	1	0.06	0.5
Sodium	7440-23-5	NA	NS	NS	500	22.48	100
Thallium	7440-28-0	2	31	NS	2.5	3.14	2
Vanadium	7440-62-2	7,100	15,000	NS	5	0.40	2
Zinc	7440-66-6	5,100	920,000	NS	6	1.57	2
Tin	7440-31-5	NA	1,800,000	NS	-	-	1

NS – Not Specify
* MDL study con not be successfully performed on these analytes because of high background levels in matrix (sand).

** New Jersey Department of Environmental Protection (NJDEP) - Direct Contact Soil Cleanup Criteria, May 12, 1999. [Use the most recent version]. http://www.nj.gov/dep/srp/guidance/scc/

QAPP Worksheet #16: Project Schedule/Timeline Table

Activities	Organization	Dates (MM/DD/YY)		Deliverable	Deliverable Due Date
		Anticipated Date(s) of Initiation	Anticipated Date of Completion		
Preparation of QAPP	RST 2 Contractor SPM	Prior to sampling date	02/07/13	QAPP	NA
Review of QAPP	RST 2 Contractor QAO and/or Group Leader	Prior to sampling date	02/07/13	Approved QAPP	02/25/13
Preparation of HASP	RST 2 Contractor SPM	Prior to sampling date	02/12/13	HASP	02/25/13
Procurement of Field Equipment	RST 2 Contractor SPM and/or Equipment Officer	Prior to sampling date	---	NA	NA
Laboratory Request	Not Applicable	Prior to sampling date	02/04/13	CLP Request Form	NA
Field Reconnaissance/Access	RST 2 Contractor SPM; or EPA Region II OSC	02/07/13	02/07/13	NA	NA
Collection of Field Samples	RST 2 Contractor SPM	02/27/13	02/28/13	NA	NA
Trip Report	RST 2 Contractor SPM	2/28/13	3/14/13	Trip Report	3/14/13
Laboratory Electronic Data Received	RST 2 Contractor and CLP Laboratory	21 days from sampling dates	03/22/13	Preliminary Data	03/22/13
Laboratory Package Received	RST 2 Contractor and CLP Laboratory	02/28/13	03/22/13	--	--
Validation of Laboratory Results	RST 2 Contractor and CLP Laboratory	03/22/13	4/12/13	Validation Report	4/12/13
Data Evaluation/ Preparation of Final Report	RST 2 Contractor SPM	04/12/13	04/26/13	Analytical Report	04/26/13

TBD – To be determine

QAPP Worksheet #17: Sampling Design and Rationale

As part of the Removal Assessment, RST 2 is tasked with the collection of up to 53 grab soil samples (including three field duplicate samples), including and two rinsate blank samples, from the former Barth Smelting Corp. facility. Sampling will tentatively begin on February 27, 2013. The samples will be collected to determine the nature and extent of lead and metals contaminated soil throughout the Site. The Site will be divided into 10 grids cells and one bore-hole will be advanced to the depth of 2 ft bgs at each grid node. The soil samples will be collected at the intervals of 0-1, 1-6, 6-12, 12-18, and 18-24 inches bgs. The soil samples collected will be screened and be submitted to the EPA's DESA laboratory for TAL metals, mercury, and tin analysis. The soil samples will be collected for a definitive data QA Objective. Field duplicate and MS/MSD samples will be collected at a rate of one per 20 samples. Field screening for lead in soil will be performed using portable XRF technology for all samples. All samples will be collected in 4-oz. jars and submitted for laboratory analysis including TAL metals, mercury, and tin. Soil samples collected from the 0-1 inch interval will be designated for sieving with a 250-micron stainless steel sieve and pan. All sample information will be entered into a Scribe database for the generation of the chain of custody and sample labels.

All stainless-steel equipment used during field-sampling activities will be decontaminated in accordance to EPA/ERT SOP #2006 prior to and subsequent to sampling. Decontamination of sampling equipment will be conducted as follows:

1. Alconox detergent and potable water scrub.
2. Potable water rinse.
3. Deionized water rinse.
4. Air dry (sufficient time will be allowed for the equipment to completely dry).
5. Deionized water rinse and air dry.

SOIL SAMPLING

Soil sampling will be conducted as per EPA/ERT Standard Operating Procedure (SOP) 2001 for General Field Sampling Guidelines and SOP 2012 for Soil Sampling from the Compendium of ERT Soil Sampling and Surface Geophysics Procedures.

Field screening for lead in soil will be performed using portable XRF technology. Screening will take place either on-site or at a nearby command post. The samples will be collected in a 6 by 9 inch plastic bag, homogenized, dried, and analyzed three times using the XRF. Organic debris will be removed from the sample before it is homogenized. Each XRF sample screening interval will last 60 seconds. The three screening intervals will then be averaged to determine the lead concentration. Field screening samples will be collected with dedicated plastic scoops. Samples or composite samples on which XRF screening will be performed will be at the discretion of the OSC.

QAPP Worksheet #17: Sampling Design and Rationale (concluded)

The following laboratory will provide the analyses indicated:

Lab Name/Location	Sample Type	Parameters
EPA DESA Laboratory 2890 Woodbridge Ave. Bldg. 209, MS-230 Edison, NJ 08837	Soil	TAL Metals, Mercury, and Tin
EPA DESA Laboratory 2890 Woodbridge Ave. Bldg. 209, MS-230 Edison, NJ 08837	Aqueous	TAL Metals, Mercury, and Tin

Refer to Worksheet #21 for QA/QC samples, sampling methods, and SOPs.

QAPP Worksheet #18: Sampling Locations and Methods/SOP Requirements Table

Matrix	Sampling Location(s)	Units	Analytical Group(s)	Concentration Level	No. of Samples (identify field duplicates)	Sampling SOP Reference	Rationale for Sampling Location
Soil	To be Determined	mg/kg	TAL Metals, Mercury and Tin	Medium	1/20 duplicate sample per matrix	SOP# 2001, 2006 and 2012	Determine contaminants

The website for EPA-ERT SOPs is: http://www.ert.org/mainContent.asp?section=Products&subsection=List

QAPP Worksheet #19: Analytical SOP Requirements Table

Matrix	No. of Samples	Analytical Group [Lab Assignment]	Concentration Level	Analytical and Preparation Method/SOP Reference	Sample Volume	Containers (number, size, and type)	Preservation Requirements	Maximum Holding Time (preparation/ analysis)
Soil	53	Total Metals, Mercury and Tin	Medium	C-109 (*Ref: EPA 200.7)* C- 110 (*Ref: EPA 245.1)*	1 X 250ml 1 X 250ml(QC)	4-oz. glass jar	Cool to 40 C	6 months, Hg-28days

QAPP Worksheet #20: Field Quality Control Sample Summary Table

Matrix	Analytical Group	Concentration Level	Analytical and Preparation SOP Reference	No. of Sampling Locations	No. of Field Duplicate Pairs	No. of Extra Volume Laboratory QC (e.g., MS/MSD) Samples[1]	No. of Rinsate Blanks[1]	No. of Trip. Blanks	No. of PE Samples
Soil	TAL Metals, Mercury & Tin	Medium	C-109, C-110 *(Ref: EPA 200.7, 245.1)*	50	1 per 20 samples	1 per 20 samples	1 per property or one per day	NR	NR

[1] Only required if non-dedicated sampling equipment to be used.
NR – not required
TAL – target analyte list

QAPP Worksheet #21: Project Sampling SOP References Table

Reference Number	Title, Revision Date and/or Number	Originating Organization	Equipment Type	Modified for Project Work? (Y/N)	Comments
SOP #2012	Soil Sampling from the Compendium of ERT Soil Sampling and Surface Geophysics Procedures.	EPA/OSWER/ERT	Stainless steel bowls, scoops bucket augers, 4-oz. glass jars	N	--
SOP#2001	General Field Sampling Guidelines (all media); Rev. 0.0 August 1994	EPA/OSWER/ERT	Site Specific	N	--
SOP#2006	Sampling Equipment Decontamination; Rev 0.0 August 1994	EPA/OSWER/ERT	Site Specific	N	--

Note: The website for EPA-ERT SOPs is: www.ert.org/mainContent.asp?section=Products&subsection=List

QAPP Worksheet #22: Field Equipment Calibration, Maintenance, Testing, and Inspection Table

Field Equipment	Calibration Activity	Maintenance Activity	Testing/ Inspection Activity	Frequency	Acceptance Criteria	Corrective Action	Responsible Person	SOP Reference
Niton XL3T600 XRF	Calibrate using NIST Standard Reference Materials (SRMs) (No. 2702 and 2781) and SiO2 (silicon dioxide) blank	Check and replace battery daily	Clean mylar testing window daily and/or as needed	Calibrate prior to day's activities; anytime anomaly suspected	20% or less difference between the value of the NIST standard and the XRF result for an element	Change battery; perform energy calibration check, standardize and calibrate using NIST standards	Equipment Vendor	Niton Systems Operating Manual for XL3T666 Series XRF Analyzer-
Trimble® GeoXT™ handheld								

QAPP Worksheet #23: Analytical SOP References Table

Reference Number	Title, Revision Date, and/or Number	Definitive or Screening Data	Analytical Group	Instrument	Organization Performing Analysis	Modified for Project Work? (Y/N)
C-109	Determination of Trace Elements in Aqueous Trace Metals in Aqueous, Soil/Sediment/Sludge- ICP-AES, Rev 2.0, 3/07	Definitive	TAL Metals and Tin	ICP-AES	EPA DESA Laboratory	N
C-110	Mercury Analysis in Water and Soil/Sediments By CVAAS, Rev 2.0, 3/07	Definite	Mercury	CVAA	EPA DESA Laboratory	N

ICP-AES – Inductively coupled plasma – atomic emission spectroscopy
CVAA - Cold vapor atomic absorption technique
USEPA – U.S. Environmental Protection Agency
DESA - Division of Environmental Science and Assessment

QAPP Worksheet #24: Analytical Instrument Calibration Table

Instrument	Calibration Procedure	Frequency of Calibration	Acceptance Criteria	Corrective Action (CA)	Person Responsible for CA	SOP Reference[1]
ICP-AES	See SOP C-109	See SOP C-109	See SOP C-109	See SOP C-109	Assigned EPA DESA Laboratory personnel	SOP C-109
CVAA	See SOP C-110	See SOP C-110	See SOP C-110	See SOP C-110	Assigned EPA DESA Laboratory personnel	SOP C-110

[1] Specify the appropriate letter or number form the Analytical SOP References table (Worksheet #23)
CA – corrective action
DESA – Division of Environmental Science and Assessment
EPA – U.S. Environmental Protection Agency
ICP-AES – inductively coupled plasma atomic emission spectroscopy
CVAA - Cold vapor atomic absorption technique
SOP – standard operating procedure

QAPP Worksheet #25: Analytical Instrument and Equipment Maintenance, Testing, and Inspection Table

Instrument/ Equipment	Maintenance Activity	Testing/Inspection Activity	Frequency	Acceptance Criteria	Corrective Action	Responsible Person	SOP Reference[1]
ICP-AES	As per instrument manufacturer's recommendations	As per instrument manufacturer's recommendations; check connections	As per instrument manufacturer's recommendations	Acceptable re-calibration; see DESA Method C-109	Inspect the system, correct problem, re-calibrate and/or reanalyze samples.	EPA DESA Laboratory ICP-AES / Technician	DESA Method C-109
CVAA	As per instrument manufacturer's recommendations	As per instrument manufacturer's recommendations; check connections	As per instrument manufacturer's recommendations	Acceptable re-calibration; see DESA Method C-110	Inspect the system, correct problem, re-calibrate and/or reanalyze samples.	EPA DESA Laboratory CVAA / Technician	DESA Method C-110

[1] Specify the appropriate letter or number form the Analytical SOP References table (Worksheet #23)

QAPP Worksheet #26: Sample Handling System

SAMPLE COLLECTION, PACKAGING, AND SHIPMENT
Sample Collection (Personnel/Organization): RST 2 Site Project Manager, Weston Solutions, Inc., Region II
Sample Packaging (Personnel/Organization): RST 2 Site Project Manager and sampling team members, Weston Solutions, Inc., Region II
Coordination of Shipment (Personnel/Organization): RST 2 Site Project Manager, sampling team members, Weston Solutions, Inc., Region II
Type of Shipment/Carrier: FedEx and/or hand-delivery
SAMPLE RECEIPT AND ANALYSIS
Sample Receipt (Personnel/Organization): OSCAR/DESA LAB, Sample Custodian and
Sample Custody and Storage (Personnel/Organization): OSCAR/DESA LAB, Sample Custodian
Sample Preparation (Personnel/Organization): OSCAR/DESA LAB, Sample Custodian
Sample Determinative Analysis (Personnel/Organization): OSCAR/DESA LAB, Sample Custodian a
SAMPLE ARCHIVING
Field Sample Storage (No. of days from sample collection): Samples to be shipped same day of collection, and arrive at laboratory within 24 hours (1 day) of sample shipment
Sample Extract/Digestate Storage (No. of days from extraction/digestion): As per analytical methodology; see Worksheet #19
SAMPLE DISPOSAL
Personnel/Organization: OSCAR/DESA LAB, Sample Custodian
Number of Days from Analysis: Until analysis and QA/QC checks are completed; as per analytical methodology; see Worksheet #19.

QAPP Worksheet #27: Sample Custody Requirements

Sample Identification Procedures: Each sample collected by Region II RST 2 will be designated by a code that will identify the site. The code will be a site-specific property number. The media type will follow the numeric code. A hyphen will separate the site code and media type. Specific media types are as follows: SS – Soil Sample RB – Rinsate Blank

After the media type, the sequential sample numbers will be listed; duplicate samples will be identified in the same manner as other samples and will be distinguished and documented in the field logbook.

e.g. P001-SS001-0612-001 Property P001, Soil Sample Number 001, 6 to 12 Inches in Depth, First Sample From Location.
RB-020613 RB- Rinaste Blank, Date 020613.

Field Sample Custody Procedures (sample collection, packaging, shipment, and delivery to laboratory): Each sample will be individually identified and labeled after collection, then sealed with custody seals and enclosed in a plastic cooler. The sample information will be recorded on chain-of custody (COC) forms, and will be either hand delivered or shipped to the appropriate laboratory via overnight delivery service or courier. Chain-of-custody records must be prepared in Scribe to accompany samples from the time of collection and throughout the shipping process. Each individual in possession of the samples must sign and date the sample COC Record. The chain-of-custody record will be considered completed upon receipt at the laboratory. A traffic report and chain-of-custody record will be maintained from the time the sample is taken to its final deposition. Every transfer of custody must be noted and signed for, and a copy of this record kept by each individual who has signed. When samples are not under direct control of the individual responsible for them, they must be stored in a locked container sealed with a custody seal. Specific information regarding custody of the samples projected to be collected on the weekend will be noted in the field logbook. The chain-of-custody record should include (at minimum) the following: 1) Sample identification number; 2) Sample information; 3) Sample location; 4) Sample date; 5) Sample Time; 6) Sample Type Matrix; 7) Sample Container Type; 8) Sample Analysis Requested; 9) Name(s) and signature(s) of sampler(s); and 10) Signature(s) of any individual(s) with custody of samples.

For this event each parcel will have its own chain-of custody. A separate chain-of-custody form must accompany each cooler for each daily shipment The chain-of-custody form must address all samples in that cooler, but not address samples in any other cooler. This practice maintains the chain-of-custody for all samples in case of mis-shipment.

Laboratory Sample Custody Procedures (receipt of samples, archiving, and disposal): A sample custodian at the laboratory will accept custody of the shipped samples, and check them for discrepancies, proper preservation, integrity, etc. If noted, issues will be forwarded to the laboratory manager for corrective action. The sample custodian will relinquish custody to the appropriate department for analysis. At this time, no samples will be archived at the laboratory. Disposal of the samples will occur only after analyses and QA/QC checks are completed.

QAPP Worksheet #28: QC Samples Table

(UFP-QAPP Manual Section 3.4)

Complete a separate worksheet for each sampling technique, analytical method/SOP, matrix, analytical group, and concentration level. If method/SOP QC acceptance limit exceed the measurement performance criteria, the data obtained may be unusable for making project decisions.

Matrix	Soil/ Aqueous[1]
Analytical Group	TAL Metals, Mercury & Tin
Concentration Level	Medium
Sampling SOP	2012
Analytical Method/ SOP Reference	C-109 (Ref: EPA 200.7), C-110 (EPA 245.1)
Sampler's Name	Scott Snyder, Lionel Montanez, Dipanjali Chavan
Field Sampling Organization	Weston Solutions, Inc. RST 2
Analytical Organization	EPA DESA Laboratory
No. of Sample Locations	50

QC Sample:	Frequency/Number	Method/SOP QC Acceptance Limits	Corrective Action	Person(s) Responsible for Corrective Action	Data Quality Indicator (DQI)	Measurement Performance Criteria
Tuning/System Stability(ICP-MS)	As per C-109	Pass all the tune/stability criteria	Check Instrument Reanalyze, Retune	Lab personnel	Sensitivity	Pass all the tune/stability criteria
Initial Calibration Verification	Immediately following each calibration ,after every 10 samples and at the end of each analytical run	90%-110%	Check Instrument, Reanalyze	Lab personnel	Accuracy	90%-110%
Continuing Calibration Check Standard (Alternate check standard)	Every 10 samples and at the end of each analytical run	80%-120%	Reanalyze, Qualify data	Lab personnel	Accuracy	80%-120%
Initial Calibration Blank(ICB)	After ICV	< RL	Investigate source of contamination	Lab personnel	Sensitivity Contamination	< RL
Continuing Calibration Blank(CCB)	After every CCV	< RL	Investigate source of contamination	Lab personnel	Sensitivity Contamination	< RL
Low Level Check Standard	At Beginning and end of each analytical run	± 30% of the true value	Check Instrument, Re-calibrate	Lab personnel	Accuracy	± 30% of the true value

[1] Aqueous samples will consist of rinsate blank samples only. Aqueous field duplicate and MS/MSD samples will not be collected.

QAPP Worksheet #28: QC Samples Table (Concluded)

(UFP-QAPP Manual Section 3.4)

Complete a separate worksheet for each sampling technique, analytical method/SOP, matrix, analytical group, and concentration level. If method/SOP QC acceptance limit exceed the measurement performance criteria, the data obtained may be unusable for making project decisions.

Matrix	Soil/ Aqueous[1]
Analytical Group	TAL Metals, Mercury and Tin
Concentration Level	Low
Sampling SOP	2012
Analytical Method/ SOP Reference	C-109 (Ref: EPA 200.7)
Sampler's Name	Lionel Montanez, Scott Snyder and Dipanjali Chavan
Field Sampling Organization	Weston Solutions, Inc. RST 2
Analytical Organization	EPA DESA Laboratory
No. of Sample Locations	50

QC Sample:	Frequency/Number	Method/SOP QC Acceptance Limits	Corrective Action	Person(s) Responsible for Corrective Action	Data Quality Indicator (DQI)	Measurement Performance Criteria
Interference Check Sample(ICP-200.7)	At Beginning and end of each analytical run	< RL Except Al ,Fe, Ca, K, Mg and Na	As per C-109	Lab personnel	Precision	< RL Except Al ,Fe, Ca, K, Mg and Na
Method blank	1 per extraction batch of ≤ 20 samples	< RL	Investigate source of contamination	Lab personnel	Sensitivity Contamination	< RL
LCS/LFB	2 per extraction batch of ≤ 20 samples	Limits: Average Recovery ± 20% aqueous, ± 25% Soil) % RPD < 20(Aq), % RPD <25(Soil)	Qualify data	Lab personnel	Accuracy/ Precision	Limits: Average Recovery ± 20% aqueous, ± 25% Solids) % RPD < 20(Aq), % RPD <25(Soil
Laboratory Matrix spikes	1 per extraction batch of ≤ 20 samples	Limits ± 20% aqueous, ± 25% Soil)	Qualify data	Lab personnel	Accuracy	Limits ± 20% aqueous, ± 25% Soil)
Serial Dilution Test (ICP-200.7)	Matrix spike sample	RPD < 20 %	Qualify data	Lab personnel	Precision	RPD < 20 %

[1] Aqueous samples will consist of rinsate blank samples only. Aqueous field duplicate and MS/MSD samples will not be collected.

QAPP Worksheet #29: Project Documents and Records Table

Sample Collection Documents and Records	Analysis Documents and Records	Data Assessment Documents and Records	Other
• Field logbooks • COC forms • Field Data Sheets • Photo-document	• Sample receipt logs • Internal and external COC forms • Equipment calibration logs • Sample preparation worksheets/logs • Sample analysis worksheets/run logs • Telephone/email logs • Corrective action documentation	• Data validation reports • Field inspection checklist(s) • Review forms for electronic entry of data into database • Corrective action documentation	CLP Request Form

QAPP Worksheet #30: Analytical Services Table

Matrix	Analytical Group	Concentration Level	Analytical SOP	Data Package Turnaround Time	Laboratory/Organization (Name and Address, Contact Person and Telephone Number)	Backup Laboratory/Organization (Name and Address, Contact Person and Telephone Number)
Soil	TAL Metals, Mercury & Tin	Medium	C-109 (Ref. EPA 200.7), C-110 (Ref. EPA 245.1)	14 days preliminary	EPA DESA Laboratory	NA

NA – not applicable
SOP – standard operating procedure
TAL – target analyte list

QAPP Worksheet #31: Planned Project Assessments Table

Assessment Type	Frequency	Internal or External	Organization Performing Assessment	Person(s) Responsible for Performing Assessment (Title and Organizational Affiliation)	Person(s) Responsible for Responding to Assessment Findings (Title and Organizational Affiliation)	Person(s) Responsible for Identifying and Implementing Corrective Actions (Title and Organizational Affiliation)	Person(s) Responsible for Monitoring Effectiveness of Corrective Actions (Title and Organizational Affiliation)
EPA DESA Laboratory							
Proficiency Testing	Semiannually	External	NELAC	PT provider	Lab Personnel	Lab Personnel	Lab QA Officer
NELAC	Every two years	External	NELAC	Florida DOH	Lab QA Officer	Lab Personnel	Florida DOH
Internal Audit	Monthly	Internally	DESA Lab	Lab QA Officer	Lab Personnel	Lab Personnel	Lab QA Officer

QAPP Worksheet #32: Assessment Findings and Corrective Action Responses

Assessment Type	Nature of Deficiencies Documentation	Individual(s) Notified of Findings (Name, Title, Organization)	Timeframe of Notification	Nature of Corrective Action Response Documentation	Individual(s) Receiving Corrective Action Response (Name, Title, Org.)	Timeframe for Response
Project Readiness Review	Checklist or logbook entry	RST 2 Site Project Manager, Weston Solutions, Inc.	Immediately to within 24 hours of review	Checklist or logbook entry	RST 2 Site Project Leader	Immediately to within 24 hours of review
Field Observations/ Deviations from Work Plan	Logbook	RST 2 Site Project Manager, Weston Solutions, Inc. and EPA OSC	Immediately to within 24 hours of deviation	Logbook	RST 2 Site Project Manager and EPA OSC	Immediately to within 24 hours of deviation
Proficiency Testing	Letter with PT failure indicated	Lab QA Officer	30 days after the audit	Investigate the reason for the PT failure	Lab QA Officer	45 days after the CA report
NELAC	Audit Report with Non-conformance to QAPP, SOPs, NELAC+LQMP	Lab Management	30 days after the audit	Investigate and have a corrective action plan for the deficiencies	Florida DOH	30 days after receiving notification
Internal	Audit Report with Non-conformance to QAPP, SOPs, NELAC Regulations	Lab Management	30 days after the audit	Investigate and have a corrective action plan for the deficiencies	Lab QA Officer	45 days after the CA report

QAPP Worksheet #33: QA Management Reports Table

Type of Report	Frequency (Daily, weekly, monthly, quarterly, annually, etc.)	Projected Delivery Date(s)	Person(s) Responsible for Report Preparation (Title and Organizational Affiliation)	Report Recipient(s) (Title and Organizational Affiliation)
EPA-DESA Laboratory				
EPA-DESA Laboratory (preliminary)	As performed	2 weeks from the sampling date	EPA DESA Laboratory	Adly Michael, RSCC, EPA Region II, RST 2 Data Validator and RST 2 SPM, Weston Solutions, Inc.
EPA-DESA Laboratory (validated)	As performed	Up to 21 days after receipt of preliminary data	EPA Region II Data Validator	RST 2 SPM, Weston Solutions, Inc., and OSC, EPA Region II
On-Site Field Inspection	As performed	7 calendar days after completion of the inspection	RST 2 HSO	RST 2 SPM, Weston Solutions, Inc.
Field Change Request	As required per field change	3 days after identification of need for field change	RST 2 SPM	EPA OSC
Final Report	As performed	2 weeks after receipt of EPA approval of data package	RST 2 SPM	EPA OSC

QAPP Worksheet #34: Verification (Step I) Process Table

Verification Input	Description	Internal/ External	Responsible for Verification (Name, Organization)
Site/field logbooks	Field notes will be prepared daily by the RST 2 Site Project Manager and will be complete, appropriate, legible and pertinent. Upon completion of field work, logbooks will be placed in the project files.	I	RST 2 Site Project Manager
Chains of custody	COC forms will be reviewed against the samples packed in the specific cooler prior to shipment. The reviewer will initial the form. An original COC will be sent with the samples to the laboratory, while copies are retained for (1) the Sampling Trip Report and (2) the project files.	I	RST 2 Site Project Manager
Sampling Trip Reports	STRs will be prepared for each week of field sampling. Information in the STR will be reviewed against the COC forms, and potential discrepancies will be discussed with field personnel to verify locations, dates, etc.	I	RST 2 Site Project Manager
Laboratory analytical data package	Data packages will be reviewed/verified internally by the laboratory performing the work for completeness and technical accuracy prior to submittal.	E	EPA DESA Laboratory
Laboratory analytical data package	Data packages will be reviewed as to content and sample information upon receipt by EPA.	I	DESA Data Validation Personnel
Final Sample Report	The project data results will be compiled in a sample report for the project. Entries will be reviewed/verified against hardcopy information.	I	RST 2 Site Project Manager
EPA DESA Laboratory			
Chain of Custody	Chain-of-custody forms will be verified against the sample cooler they represent. Sample Acceptance Checklist is completed. The OSCAR staff supervisor utilizes the analyses request information and the external COC to review the accuracy and completeness of LIMS log-in entries, as reflected on the LIMS Sample Receipt Form Details can be found in Laboratory Quality Management Plan, SOP G-25	I	OSCAR Personnel DESA LAB

QAPP Worksheet #34: Verification (Step I) Process Table (Concluded)

Verification Input	Description	Internal/ External	Responsible for Verification (Name, Organization)
Analytical data package/ Final Report	The procedures for data review : 1- Data reduction/review by Primary Analyst. 2- Review complete data package (raw data) by independent Peer Reviewer 3- The Sample Project Coordinator reviews the project documentation for completeness followed by a QA review by the QAO 4- Final review by Branch Chief/Section Chief prior to release, this review is to ensure completeness and general compliance with the objectives of the project. This final review typically does not include a review of raw data. Details can be found in Laboratory Quality Management Plan.	I	Primary Analyst, Peer Reviewer, Sample Project Coordinator, Quality Assurance Officer, Section Chief/ Branch Chief. DESA LAB

QAPP Worksheet #35: Validation (Steps IIa and IIb) Process Table

Step IIa/IIb	Validation Input	Description	Responsible for Validation (Name, Organization)
IIa	SOPs	Ensure that the sampling methods/procedures outlined in QAPP were followed, and that any deviations were noted/approved.	RST 2 Site Project Manager
IIb	SOPs	Determine potential impacts from noted/approved deviations, in regard to PQOs.	RST 2 Site Project Manager
EPA DESA Laboratory			
	Chain of Custody	Chain-of-custody forms will be verified against the sample cooler they represent. Sample Acceptance Checklist is completed. The OSCAR staff supervisor utilizes the analyses request information and the external COC to review the accuracy and completeness of LIMS log-in entries, as reflected on the LIMS Sample Receipt Form Details can be found in Laboratory Quality Management Plan, SOP G-25	OSCAR Personnel DESA LAB
	Analytical data package/ Final Report	The procedures for data review : 1- Data reduction/review by Primary Analyst. 2- Review complete data package (raw data) by independent Peer Reviewer 3- The Sample Project Coordinator reviews the project documentation for completeness followed by a QA review by the QAO 4- Final review by Branch Chief/Section Chief prior to release, this review is to ensure completeness and general compliance with the objectives of the project. This final review typically does not include a review of raw data. Details can be found in Laboratory Quality Management Plan.	Primary Analyst, Peer Reviewer, Sample Project Coordinator, Quality Assurance Officer, Section Chief/ Branch Chief. DESA LAB

QAPP Worksheet #35: Validation (Steps IIa and IIb) Process Table (Concluded)

Step IIa/IIb	Validation Input	Description	Responsible for Validation (Name, Organization)
EPA DESA Laboratory			
IIa	Chains of custody	Examine COC forms against QAPP and laboratory contract requirements (e.g., analytical methods, sample identification, etc.).	DESA Data Validation Personnel
IIa	Laboratory data package	Examine packages against QAPP and laboratory contract requirements, and against COC forms (e.g., holding times, sample handling, analytical methods, sample identification, data qualifiers, QC samples, etc.).	DESA Data Validation Personnel
IIb	Laboratory data package	Determine potential impacts from noted/approved deviations, in regard to PQOs. Examples include PQLs and QC sample limits (precision/accuracy).	DESA Data Validation Personnel
IIb	Field duplicates	Compare results of field duplicate (or replicate) analyses with RPD criteria	DESA Data Validation Personnel

QAPP Worksheet #36: Validation (Steps IIa and IIb) Summary Table

Step IIa/IIb	Matrix	Analytical Group	Concentration Level	Validation Criteria	Data Validator (title and organizational affiliation)
IIa / IIb	Soil	TAL Metals, Mercury & Tin	Medium	DESA Data Validation SOP for Analysis of Low/Medium Concentration for Total Metals, Mercury & Tin	DESA Data Validation Personnel

QAPP Worksheet #37: Usability Assessment

Summarize the usability assessment process and all procedures, including interim steps and any statistics, equations, and computer algorithms that will be used: Data, whether generated in the field or by the laboratory, are tabulated and reviewed for Precision, Accuracy, Representativeness, Completeness, and Comparability (PARCCS) by the SPM for field data or the data validator for laboratory data. The review of the PARCC DQIs will compare with the DQO detailed in the site-specific QAPP, the analytical methods used and impact of any qualitative and quantitative trends will be examined to determine if bias exists. A hard copy of field data is maintained in a designated field or site logbook. Laboratory data packages are validated, and final data reports are generated. All documents and logbooks are assigned unique and specific control numbers to allow tracking and management.
Questions about Non-CLP data, as observed during the data review process, are resolved by contacting the respective site personnel and laboratories as appropriate for resolution. All communications are documented in the data validation record with comments as to the resolution to the observed deficiencies.

Where applicable, the following documents will be followed to evaluate data for fitness in decision making: EPA QA/G-4, *Guidance on Systematic Planning using the Data Quality Objectives Process*, EPA/240/B-06/001, February 2006, and EPA QA/G-9R, *Guidance for Data Quality Assessment*, A reviewer's Guide EPA/240/B-06/002, February 2006.

Describe the evaluative procedures used to assess overall measurement error associated with the project:
As delineated in the ***Uniform Federal Policy for Implementing Environmental Quality Systems: Evaluating, Assessing and Documenting Environmental Data Collection and Use Programs Part 1: UFP-QAPP (EPA-505-B-04-900A, March 2005); Part 2A: UFP-QAPP Workbook (EPA-505-B-04-900C, March 2005); Part 2B: Quality Assurance/Quality Control Compendium: Non-Time Critical QA/QC Activities (EPA-505-B-04-900B, March 2005);*** "Graded Approach" will be implemented for data collection activities that are either exploratory or small in nature or where specific decisions cannot be identified, since this guidance indicates that the formal DQO process is not necessary.

The data will be evaluated to determine whether they satisfy the PQO for the project. The validation process determines if the data satisfy the QA criteria. After the data pass the data validation process, comparison results with the PQO is done.

QAPP Worksheet #37: Usability Assessment (Concluded)

Analytical data will be compared with New Jersey Department of Environmental Protection's (NJDEP) Non- Residential Direct Contact Soil Cleanup Criteria and EPA RMLs. The EPA will use the analytical data from this investigation to determine if the soil at the Site contains elevated concentrations of TAL metals (including mercury and tin), specifically lead, warranting an EPA Removal Action.

Identify the personnel responsible for performing the usability assessment: SPM, Data Validation Personnel, and EPA, Region II OSC

Describe the documentation that will be generated during usability assessment and how usability assessment results will be presented so that they identify trends, relationships (correlations), and anomalies:

A copy of the most current approved QAPP, including any graphs, maps and text reports developed will be provided to all personnel identified on the distribution list.

ATTACHMENT A

Site Location Map
Proposed Sample Location Map

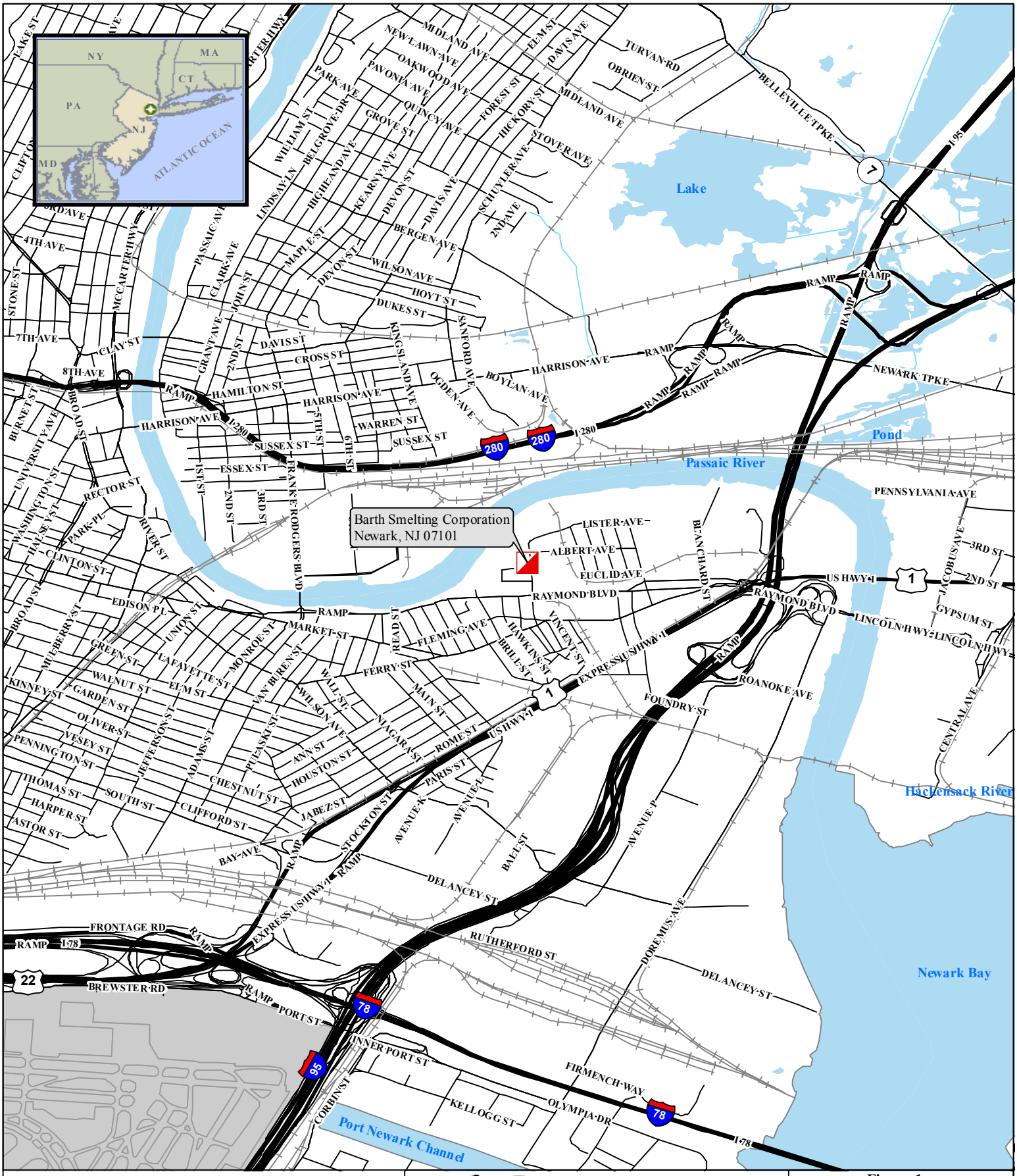

Legend

Site Location

0 0.075 0.15 0.3 0.45 0.6 Miles

N

Weston Solutions, Inc.
Northeast Division

In Association With
H & S Environmental, Inc.,
Scientific and Environmental Associates, Inc.
and Avatar Environmental, LLC.

Figure 1
Site Location Map

Barth Smelting Corporation Site
Newark, New Jersey

U.S. ENVIRONMENTAL PROTECTION AGENCY
REMOVAL SUPPORT TEAM 2
CONTRACT # EP-W-06-072

DATE MODIFIED: 12/6/2012

GIS ANALYST:	T. BENTON
EPA OSC:	K. STAIGER
RST SPM:	S. SNYDER
FILENAME:	SITEMAP.MXD

Legend

Proposed Boring Locations

Note:
Sample locations subject to change based on site conditions

0 37.5 75 150 225 300 Feet

N

Weston Solutions, Inc.
Northeast Division

In Association With
H & S Environmental, Inc.,
Scientific and Environmental Associates, Inc.
and Avatar Environmental, LLC.

Figure 2: Proposed Sample Location Map

Barth Smelting Corporation Site
Newark, New Jersey

U.S. ENVIRONMENTAL PROTECTION AGENCY
REMOVAL SUPPORT TEAM 2
CONTRACT # EP-W-06-072

DATE MODIFIED: 2/20/2013

GIS ANALYST:	P. LISICHENKO
EPA OSC:	K. STAIGER
RST SPM:	S. SNYDER
FILENAME:	LEADMAP.MXD

ATTACHMENT B

Sampling SOPs

EPA/ERT SOP # 2001
EPA/ERT SOP # 2006
EPA/ERT SOP # 2012

GENERAL FIELD SAMPLING GUIDELINES

SOP#: 2001
DATE: 08/11/94
REV. #: 0.0

1.0 SCOPE AND APPLICATION

The purpose of this Standard Operating Procedure (SOP) is to provide general field sampling guidelines that will assist REAC personnel in choosing sampling strategies, location, and frequency for proper assessment of site characteristics. This SOP is applicable to all field activities that involve sampling.

These are standard (i.e., typically applicable) operating procedures which may be varied or changed as required, dependent on site conditions, equipment limitations or limitations imposed by the procedure. In all instances, the ultimate procedures employed should be documented and associated with the final report.

Mention of trade names or commercial products does not constitute U.S. EPA endorsement or recommendation for use.

2.0 METHOD SUMMARY

Sampling is the selection of a representative portion of a larger population, universe, or body. Through examination of a sample, the characteristics of the larger body from which the sample was drawn can be inferred. In this manner, sampling can be a valuable tool for determining the presence, type, and extent of contamination by hazardous substances in the environment.

The primary objective of all sampling activities is to characterize a hazardous waste site accurately so that its impact on human health and the environment can be properly evaluated. It is only through sampling and analysis that site hazards can be measured and the job of cleanup and restoration can be accomplished effectively with minimal risk. The sampling itself must be conducted so that every sample collected retains its original physical form and chemical composition. In this way, sample integrity is insured, quality assurance standards are maintained, and the sample can accurately represent the larger body of material under investigation.

The extent to which valid inferences can be drawn from a sample depends on the degree to which the sampling effort conforms to the project's objectives. For example, as few as one sample may produce adequate, technically valid data to address the project's objectives. Meeting the project's objectives requires thorough planning of sampling activities, and implementation of the most appropriate sampling and analytical procedures. These issues will be discussed in this procedure.

3.0 SAMPLE PRESERVATION, CONTAINERS, HANDLING, AND STORAGE

The amount of sample to be collected, and the proper sample container type (i.e., glass, plastic), chemical preservation, and storage requirements are dependent on the matrix being sampled and the parameter(s) of interest. Sample preservation, containers, handling, and storage for air and waste samples are discussed in the specific SOPs for air and waste sampling techniques.

4.0 INTERFERENCES AND POTENTIAL PROBLEMS

The nature of the object or materials being sampled may be a potential problem to the sampler. If a material is homogeneous, it will generally have a uniform composition throughout. In this case, any sample increment can be considered representative of the material. On the other hand, heterogeneous samples present problems to the sampler because of changes in the material over distance, both laterally and vertically.

Samples of hazardous materials may pose a safety threat to both field and laboratory personnel. Proper health and safety precautions should be implemented when handling this type of sample.

Environmental conditions, weather conditions, or non-target chemicals may cause problems and/or interferences when performing sampling activities or when sampling for a specific parameter. Refer to the specific SOPs for sampling techniques.

5.0 EQUIPMENT/APPARATUS

The equipment/apparatus required to collect samples must be determined on a site specific basis. Due to the wide variety of sampling equipment available, refer to the specific SOPs for sampling techniques which include lists of the equipment/apparatus required for sampling.

6.0 REAGENTS

Reagents may be utilized for preservation of samples and for decontamination of sampling equipment. The preservatives required are specified by the analysis to be performed. Decontamination solutions are specified in ERT SOP #2006, Sampling Equipment Decontamination.

7.0 PROCEDURE

7.1 Types of Samples

In relation to the media to be sampled, two basic types of samples can be considered: the environmental sample and the hazardous sample.

Environmental samples are those collected from streams, ponds, lakes, wells, and are off-site samples that are not expected to be contaminated with hazardous materials. They usually do not require the special handling procedures typically used for concentrated wastes. However, in certain instances, environmental samples can contain elevated concentrations of pollutants and in such cases would have to be handled as hazardous samples.

Hazardous or concentrated samples are those collected from drums, tanks, lagoons, pits, waste piles, fresh spills, or areas previously identified as contaminated, and require special handling procedures because of their potential toxicity or hazard. These samples can be further subdivided based on their degree of hazard; however, care should be taken when handling and shipping any wastes believed to be concentrated regardless of the degree.

The importance of making the distinction between environmental and hazardous samples is two-fold:

(1) Personnel safety requirements: Any sample thought to contain enough hazardous materials to pose a safety threat should be designated as hazardous and handled in a manner which ensures the safety of both field and laboratory personnel.

(2) Transportation requirements: Hazardous samples must be packaged, labeled, and shipped according to the International Air Transport Association (IATA) Dangerous Goods Regulations or Department of Transportation (DOT) regulations and U.S. EPA guidelines.

7.2 Sample Collection Techniques

In general, two basic types of sample collection techniques are recognized, both of which can be used for either environmental or hazardous samples.

<u>Grab Samples</u>

A grab sample is defined as a discrete aliquot representative of a specific location at a given point in time. The sample is collected all at once at one particular point in the sample medium. The representativeness of such samples is defined by the nature of the materials being sampled. In general, as sources vary over time and distance, the representativeness of grab samples will decrease.

<u>Composite Samples</u>

Composites are nondiscrete samples composed of more than one specific aliquot collected at various sampling locations and/or different points in time. Analysis of this type of sample produces an average value and can in certain instances be used as an alternative to analyzing a number of individual grab samples and calculating an average value. It should be noted, however, that compositing can mask problems by diluting isolated concentrations of some hazardous compounds below detection limits.

Compositing is often used for environmental samples and may be used for hazardous samples under certain conditions. For example, compositing of hazardous waste is often performed after compatibility tests have

been completed to determine an average value over a number of different locations (group of drums). This procedure generates data that can be useful by providing an average concentration within a number of units, can serve to keep analytical costs down, and can provide information useful to transporters and waste disposal operations.

For sampling situations involving hazardous wastes, grab sampling techniques are generally preferred because grab sampling minimizes the amount of time sampling personnel must be in contact with the wastes, reduces risks associated with compositing unknowns, and eliminates chemical changes that might occur due to compositing.

7.3 Types of Sampling Strategies

The number of samples that should be collected and analyzed depends on the objective of the investigation. There are three basic sampling strategies: random, systematic, and judgmental sampling.

Random sampling involves collection of samples in a nonsystematic fashion from the entire site or a specific portion of a site. Systematic sampling involves collection of samples based on a grid or a pattern which has been previously established. When judgmental sampling is performed, samples are collected only from the portion(s) of the site most likely to be contaminated. Often, a combination of these strategies is the best approach depending on the type of the suspected/known contamination, the uniformity and size of the site, the level/type of information desired, etc.

7.4 QA Work Plans (QAWP)

A QAWP is required when it becomes evident that a field investigation is necessary. It should be initiated in conjunction with, or immediately following, notification of the field investigation. This plan should be clear and concise and should detail the following basic components, with regard to sampling activities:

- Objective and purpose of the investigation.
- Basis upon which data will be evaluated.
- Information known about the site including location, type and size of the facility, and length of operations/abandonment.
- Type and volume of contaminated material, contaminants of concern (including concentration), and basis of the information/data.
- Technical approach including media/matrix to be sampled, sampling equipment to be used, sample equipment decontamination (if necessary), sampling design and rationale, and SOPs or description of the procedure to be implemented.
- Project management and reporting, schedule, project organization and responsibilities, manpower and cost projections, and required deliverables.
- QA objectives and protocols including tables summarizing field sampling and QA/QC analysis and objectives.

Note that this list of QAWP components is not all-inclusive and that additional elements may be added or altered depending on the specific requirements of the field investigation. It should also be recognized that although a detailed QAWP is quite important, it may be impractical in some instances. Emergency responses and accidental spills are prime examples of such instances where time might prohibit the development of site-specific QAWPs prior to field activities. In such cases, investigators would have to rely on general guidelines and personal judgment, and the sampling or response plans might simply be a strategy based on preliminary information and finalized on site. In any event, a plan of action should be developed, no matter how concise or informal, to aid investigators in maintaining a logical and consistent order to the implementation of their task.

7.5 Legal Implications

The data derived from sampling activities are often introduced as critical evidence during litigation of a hazardous waste site cleanup. Legal issues in which sampling data are important may include cleanup cost recovery, identification of pollution sources and responsible parties, and technical validation of remedial design methodologies. Because of the potential for involvement in legal actions, strict adherence to technical and administrative SOPs is essential during both the development and implementation of sampling activities.

Technically valid sampling begins with thorough planning and continues through the sample collection and analytical procedures. Administrative requirements involve thorough, accurate

documentation of all sampling activities. Documentation requirements include maintenance of a chain of custody, as well as accurate records of field activities and analytical instructions. Failure to observe these procedures fully and consistently may result in data that are questionable, invalid and non-defensible in court, and the consequent loss of enforcement proceedings.

8.0 CALCULATIONS

Refer to the specific SOPs for any calculations which are associated with sampling techniques.

9.0 QUALITY ASSURANCE/ QUALITY CONTROL

Refer to the specific SOPs for the type and frequency of QA/QC samples to be analyzed, the acceptance criteria for the QA/QC samples, and any other QA/QC activities which are associated with sampling techniques.

10.0 DATA VALIDATION

Refer to the specific SOPs for data validation activities that are associated with sampling techniques.

11.0 HEALTH AND SAFETY

When working with potentially hazardous materials, follow U.S. EPA, OSHA, and corporate health and safety procedures.

SAMPLING EQUIPMENT DECONTAMINATION

SOP#: 2006
DATE: 08/11/94
REV. #: 0.0

1.0 SCOPE AND APPLICATION

The purpose of this Standard Operating Procedure (SOP) is to provide a description of the methods used for preventing, minimizing, or limiting cross-contamination of samples due to inappropriate or inadequate equipment decontamination and to provide general guidelines for developing decontamination procedures for sampling equipment to be used during hazardous waste operations as per 29 Code of Federal Regulations (CFR) 1910.120. This SOP does not address personnel decontamination.

These are standard (i.e. typically applicable) operating procedures which may be varied or changed as required, dependent upon site conditions, equipment limitation, or limitations imposed by the procedure. In all instances, the ultimate procedures employed should be documented and associated with the final report.

Mention of trade names or commercial products does not constitute U.S. Environmental Protection Agency (U.S. EPA) endorsement or recommendation for use.

2.0 METHOD SUMMARY

Removing or neutralizing contaminants from equipment minimizes the likelihood of sample cross contamination, reduces or eliminates transfer of contaminants to clean areas, and prevents the mixing of incompatible substances.

Gross contamination can be removed by physical decontamination procedures. These abrasive and non-abrasive methods include the use of brushes, air and wet blasting, and high and low pressure water cleaning.

The first step, a soap and water wash, removes all visible particulate matter and residual oils and grease. This may be preceded by a steam or high pressure water wash to facilitate residuals removal. The second step involves a tap water rinse and a distilled/deionized water rinse to remove the detergent. An acid rinse provides a low pH media for trace metals removal and is included in the decontamination process if metal samples are to be collected. It is followed by another distilled/deionized water rinse. If sample analysis does not include metals, the acid rinse step can be omitted. Next, a high purity solvent rinse is performed for trace organics removal if organics are a concern at the site. Typical solvents used for removal of organic contaminants include acetone, hexane, or water. Acetone is typically chosen because it is an excellent solvent, miscible in water, and not a target analyte on the Priority Pollutant List. If acetone is known to be a contaminant of concern at a given site or if Target Compound List analysis (which includes acetone) is to be performed, another solvent may be substituted. The solvent must be allowed to evaporate completely and then a final distilled/deionized water rinse is performed. This rinse removes any residual traces of the solvent.

The decontamination procedure described above may be summarized as follows:

1. Physical removal
2. Non-phosphate detergent wash
3. Tap water rinse
4. Distilled/deionized water rinse
5. 10% nitric acid rinse
6. Distilled/deionized water rinse
7. Solvent rinse (pesticide grade)
8. Air dry
9. Distilled/deionized water rinse

If a particular contaminant fraction is not present at the site, the nine (9) step decontamination procedure specified above may be modified for site specificity. For example, the nitric acid rinse may be eliminated if metals are not of concern at a site. Similarly, the solvent rinse may be eliminated if organics are not of

concern at a site. Modifications to the standard procedure should be documented in the site specific work plan or subsequent report.

3.0 SAMPLE PRESERVATION, CONTAINERS, HANDLING, AND STORAGE

The amount of sample to be collected and the proper sample container type (i.e., glass, plastic), chemical preservation, and storage requirements are dependent on the matrix being sampled and the parameter(s) of interest.

More specifically, sample collection and analysis of decontamination waste may be required before beginning proper disposal of decontamination liquids and solids generated at a site. This should be determined prior to initiation of site activities.

4.0 INTERFERENCES AND POTENTIAL PROBLEMS

- The use of distilled/deionized water commonly available from commercial vendors may be acceptable for decontamination of sampling equipment provided that it has been verified by laboratory analysis to be analyte free (specifically for the contaminants of concern).

- The use of an untreated potable water supply is not an acceptable substitute for tap water. Tap water may be used from any municipal or industrial water treatment system.

- If acids or solvents are utilized in decontamination they raise health and safety, and waste disposal concerns.

- Damage can be incurred by acid and solvent washing of complex and sophisticated sampling equipment.

5.0 EQUIPMENT/APPARATUS

Decontamination equipment, materials, and supplies are generally selected based on availability. Other considerations include the ease of decontaminating or disposing of the equipment. Most equipment and supplies can be easily procured. For example, soft-bristle scrub brushes or long-handled bottle brushes can be used to remove contaminants. Large galvanized wash tubs, stock tanks, or buckets can hold wash and rinse solutions. Children's wading pools can

also be used. Large plastic garbage cans or other similar containers lined with plastic bags can help segregate contaminated equipment. Contaminated liquid can be stored temporarily in metal or plastic cans or drums.

The following standard materials and equipment are recommended for decontamination activities:

5.1 Decontamination Solutions

- Non-phosphate detergent
- Selected solvents (acetone, hexane, nitric acid, etc.)
- Tap water
- Distilled or deionized water

5.2 Decontamination Tools/Supplies

- Long and short handled brushes
- Bottle brushes
- Drop cloth/plastic sheeting
- Paper towels
- Plastic or galvanized tubs or buckets
- Pressurized sprayers (H_2O)
- Solvent sprayers
- Aluminum foil

5.3 Health and Safety Equipment

Appropriate personal protective equipment (i.e., safety glasses or splash shield, appropriate gloves, aprons or coveralls, respirator, emergency eye wash)

5.4 Waste Disposal

- Trash bags
- Trash containers
- 55-gallon drums
- Metal/plastic buckets/containers for storage and disposal of decontamination solutions

6.0 REAGENTS

There are no reagents used in this procedure aside from the actual decontamination solutions. Table 1 (Appendix A) lists solvent rinses which may be required for elimination of particular chemicals. In general, the following solvents are typically utilized for decontamination purposes:

- 10% nitric acid is typically used for inorganic compounds such as metals. An acid rinse may not be required if inorganics are not a contaminant of concern.
- Acetone (pesticide grade)[1]
- Hexane (pesticide grade)[1]
- Methanol[1]

[1] - Only if sample is to be analyzed for organics.

7.0 PROCEDURES

As part of the health and safety plan, a decontamination plan should be developed and reviewed. The decontamination line should be set up before any personnel or equipment enter the areas of potential exposure. The equipment decontamination plan should include:

- The number, location, and layout of decontamination stations.

- Decontamination equipment needed.

- Appropriate decontamination methods.

- Methods for disposal of contaminated clothing, equipment, and solutions.

- Procedures can be established to minimize the potential for contamination. This may include: (1) work practices that minimize contact with potential contaminants; (2) using remote sampling techniques; (3) covering monitoring and sampling equipment with plastic, aluminum foil, or other protective material; (4) watering down dusty areas; (5) avoiding laying down equipment in areas of obvious contamination; and (6) use of disposable sampling equipment.

7.1 Decontamination Methods

All samples and equipment leaving the contaminated area of a site must be decontaminated to remove any contamination that may have adhered to equipment. Various decontamination methods will remove contaminants by: (1) flushing or other physical action, or (2) chemical complexing to inactivate contaminants by neutralization, chemical reaction, disinfection, or sterilization.

Physical decontamination techniques can be grouped into two categories: abrasive methods and non-abrasive methods, as follows:

7.1.1 Abrasive Cleaning Methods

Abrasive cleaning methods work by rubbing and wearing away the top layer of the surface containing the contaminant. The mechanical abrasive cleaning methods are most commonly used at hazardous waste sites. The following abrasive methods are available:

Mechanical

Mechanical methods of decontamination include using metal or nylon brushes. The amount and type of contaminants removed will vary with the hardness of bristles, length of time brushed, degree of brush contact, degree of contamination, nature of the surface being cleaned, and degree of contaminant adherence to the surface.

Air Blasting

Air blasting equipment uses compressed air to force abrasive material through a nozzle at high velocities. The distance between nozzle and surface cleaned, air pressure, time of application, and angle at which the abrasive strikes the surface will dictate cleaning efficiency. Disadvantages of this method are the inability to control the amount of material removed and the large amount of waste generated.

Wet Blasting

Wet blast cleaning involves use of a suspended fine abrasive. The abrasive/water mixture is delivered by compressed air to the contaminated area. By using a very fine abrasive, the amount of materials removed can be carefully controlled.

7.1.2 Non-Abrasive Cleaning Methods

Non-abrasive cleaning methods work by forcing the contaminant off a surface with pressure. In general, the equipment surface is not removed using non-abrasive methods.

Low-Pressure Water

This method consists of a container which is filled with water. The user pumps air out of the container to create a vacuum. A slender nozzle and hose allow the user to spray in hard-to-reach places.

High-Pressure Water

This method consists of a high-pressure pump, an operator controlled directional nozzle, and a high-pressure hose. Operating pressure usually ranges from 340 to 680 atmospheres (atm) and flow rates usually range from 20 to 140 liters per minute.

Ultra-High-Pressure Water

This system produces a water jet that is pressured from 1,000 to 4,000 atmospheres. This ultra-high-pressure spray can remove tightly-adhered surface films. The water velocity ranges from 500 meters/second (m/s) (1,000 atm) to 900 m/s (4,000 atm). Additives can be used to enhance the cleaning action.

Rinsing

Contaminants are removed by rinsing through dilution, physical attraction, and solubilization.

Damp Cloth Removal

In some instances, due to sensitive, non-waterproof equipment or due to the unlikelihood of equipment being contaminated, it is not necessary to conduct an extensive decontamination procedure. For example, air sampling pumps hooked on a fence, placed on a drum, or wrapped in plastic bags are not likely to become heavily contaminated. A damp cloth should be used to wipe off contaminants which may have adhered to equipment through airborne contaminants or from surfaces upon which the equipment was set.

Disinfection/Sterilization

Disinfectants are a practical means of inactivating infectious agents. Unfortunately, standard sterilization methods are impractical for large equipment. This method of decontamination is typically performed off-site.

7.2 Field Sampling Equipment Decontamination Procedures

The decontamination line is setup so that the first station is used to clean the most contaminated item. It progresses to the last station where the least contaminated item is cleaned. The spread of contaminants is further reduced by separating each decontamination station by a minimum of three (3) feet. Ideally, the contamination should decrease as the equipment progresses from one station to another farther along in the line.

A site is typically divided up into the following boundaries: Hot Zone or Exclusion Zone (EZ), the Contamination Reduction Zone (CRZ), and the Support or Safe Zone (SZ). The decontamination line should be setup in the Contamination Reduction Corridor (CRC) which is in the CRZ. Figure 1 (Appendix B) shows a typical contaminant reduction zone layout. The CRC controls access into and out of the exclusion zone and confines decontamination activities to a limited area. The CRC boundaries should be conspicuously marked. The far end is the hotline, the boundary between the exclusion zone and the contamination reduction zone. The size of the decontamination corridor depends on the number of stations in the decontamination process, overall dimensions of the work zones, and amount of space available at the site. Whenever possible, it should be a straight line.

Anyone in the CRC should be wearing the level of protection designated for the decontamination crew. Another corridor may be required for the entry and exit of heavy equipment. Sampling and monitoring equipment and sampling supplies are all maintained outside of the CRC. Personnel don their equipment away from the CRC and enter the exclusion zone through a separate access control point at the hotline. One person (or more) dedicated to decontaminating equipment is recommended.

7.2.1 Decontamination Setup

Starting with the most contaminated station, the decontamination setup should be as follows:

Station 1: Segregate Equipment Drop

Place plastic sheeting on the ground (Figure 2, Appendix B). Size will depend on amount of equipment to be decontaminated. Provide containers lined with plastic if equipment is to be segregated. Segregation may be required if sensitive equipment or mildly contaminated equipment is used at the same time as equipment which is likely to be heavily contaminated.

Station 2: Physical Removal With A High-Pressure

Washer (Optional)

As indicated in 7.1.2, a high-pressure wash may be required for compounds which are difficult to remove by washing with brushes. The elevated temperature of the water from the high-pressure washers is excellent at removing greasy/oily compounds. High pressure washers require water and electricity.

A decontamination pad may be required for the high-pressure wash area. An example of a wash pad may consist of an approximately 1 1/2 foot-deep basin lined with plastic sheeting and sloped to a sump at one corner. A layer of sand can be placed over the plastic and the basin is filled with gravel or shell. The sump is also lined with visqueen and a barrel is placed in the hole to prevent collapse. A sump pump is used to remove the water from the sump for transfer into a drum.

Typically heavy machinery is decontaminated at the end of the day unless site sampling requires that the machinery be decontaminated frequently. A separate decontamination pad may be required for heavy equipment.

Station 3: Physical Removal With Brushes And A Wash Basin

Prior to setting up Station 3, place plastic sheeting on the ground to cover areas under Station 3 through Station 10.
Fill a wash basin, a large bucket, or child's swimming pool with non-phosphate detergent and tap water. Several bottle and bristle brushes to physically remove contamination should be dedicated to this station . Approximately 10 - 50 gallons of water may be required initially depending upon the amount of equipment to decontaminate and the amount of gross contamination.

Station 4: Water Basin

Fill a wash basin, a large bucket, or child's swimming pool with tap water. Several bottle and bristle brushes should be dedicated to this station. Approximately 10-50 gallons of water may be required initially depending upon the amount of equipment to decontaminate and the amount of gross contamination.

Station 5: Low-Pressure Sprayers

Fill a low-pressure sprayer with distilled/deionized water. Provide a 5-gallon bucket or basin to contain the water during the rinsing process. Approximately 10-20 gallons of water may be required initially depending upon the amount of equipment to decontaminate and the amount of gross contamination.

Station 6: Nitric Acid Sprayers

Fill a spray bottle with 10% nitric acid. An acid rinse may not be required if inorganics are not a contaminant of concern. The amount of acid will depend on the amount of equipment to be decontaminated. Provide a 5-gallon bucket or basin to collect acid during the rinsing process.

Station 7: Low-Pressure Sprayers

Fill a low-pressure sprayer with distilled/deionized water. Provide a 5-gallon bucket or basin to collect water during the rinsate process.

Station 8: Organic Solvent Sprayers

Fill a spray bottle with an organic solvent. After each solvent rinse, the equipment should be rinsed with distilled/deionized water and air dried. Amount of solvent will depend on the amount of equipment to decontaminate. Provide a 5-gallon bucket or basin to collect the solvent during the rinsing process.

Solvent rinses may not be required unless organics are a contaminant of concern, and may be eliminated from the station sequence.

Station 9: Low-Pressure Sprayers

Fill a low-pressure sprayer with distilled/deionized water. Provide a 5-gallon bucket or basin to collect water during the rinsate process.

Station 10: Clean Equipment Drop

Lay a clean piece of plastic sheeting over the bottom plastic layer. This will allow easy removal of the plastic in the event that it becomes dirty. Provide aluminum foil, plastic, or other protective material to wrap clean equipment.

7.2.2 Decontamination Procedures

Station 1: Segregate Equipment Drop

Deposit equipment used on-site (i.e., tools, sampling devices and containers, monitoring instruments radios, clipboards, etc.) on the plastic drop cloth/sheet or in different containers with plastic liners. Each will be contaminated to a different degree. Segregation at the drop reduces the probability of cross contamination. Loose leaf sampling data sheets or maps can be placed in plastic zip lock bags if contamination is evident.

Station 2: Physical Removal With A High-Pressure Washer (Optional)

Use high pressure wash on grossly contaminated equipment. Do not use high- pressure wash on sensitive or non-waterproof equipment.

Station 3: Physical Removal With Brushes And A Wash Basin

Scrub equipment with soap and water using bottle and bristle brushes. Only sensitive equipment (i.e., radios, air monitoring and sampling equipment) which is waterproof should be washed. Equipment which is not waterproof should have plastic bags removed and wiped down with a damp cloth. Acids and organic rinses may also ruin sensitive equipment. Consult the manufacturers for recommended decontamination solutions.

Station 4: Equipment Rinse

Wash soap off of equipment with water by immersing the equipment in the water while brushing. Repeat as many times as necessary.

Station 5: Low-Pressure Rinse

Rinse sampling equipment with distilled/deionized water with a low-pressure sprayer.

Station 6: Nitric Acid Sprayers (required only if metals are a contaminant of concern)

Using a spray bottle rinse sampling equipment with nitric acid. Begin spraying (inside and outside) at one end of the equipment allowing the acid to drip to the other end into a 5-gallon bucket. A rinsate blank may be required at this station. Refer to Section 9.

Station 7: Low-Pressure Sprayers

Rinse sampling equipment with distilled/deionized water with a low-pressure sprayer.

Station 8: Organic Solvent Sprayers

Rinse sampling equipment with a solvent. Begin spraying (inside and outside) at one end of the equipment allowing the solvent to drip to the other end into a 5-gallon bucket. Allow the solvent to evaporate from the equipment before going to the next station. A QC rinsate sample may be required at this station.

Station 9: Low-Pressure Sprayers

Rinse sampling equipment with distilled/deionized water with a low-pressure washer.

Station 10 : Clean Equipment Drop

Lay clean equipment on plastic sheeting. Once air dried, wrap sampling equipment with aluminum foil, plastic, or other protective material.

7.2.3 Post Decontamination Procedures

1. Collect high-pressure pad and heavy equipment decontamination area liquid and waste and store in appropriate drum or container. A sump pump can aid in the collection process. Refer to the Department of Transportation (DOT) requirements for appropriate containers based on the contaminant of concern.

2. Collect high-pressure pad and heavy equipment decontamination area solid waste and store in appropriate drum or container. Refer to the DOT requirements for appropriate containers based on the contaminant of concern.

3. Empty soap and water liquid wastes from basins and buckets and store in appropriate drum or container. Refer to the DOT requirements for appropriate containers based on the contaminant of concern.

4. Empty acid rinse waste and place in appropriate container or neutralize with a base and place in appropriate drum. pH paper or an equivalent pH test is required for

neutralization. Consult DOT requirements for appropriate drum for acid rinse waste.

5. Empty solvent rinse sprayer and solvent waste into an appropriate container. Consult DOT requirements for appropriate drum for solvent rinse waste.

6. Using low-pressure sprayers, rinse basins, and brushes. Place liquid generated from this process into the wash water rinse container.

7. Empty low-pressure sprayer water onto the ground.

8. Place all solid waste materials generated from the decontamination area (i.e., gloves and plastic sheeting, etc.) in an approved DOT drum. Refer to the DOT requirements for appropriate containers based on the contaminant of concern.

9. Write appropriate labels for waste and make arrangements for disposal. Consult DOT regulations for the appropriate label for each drum generated from the decontamination process.

8.0 CALCULATIONS

This section is not applicable to this SOP.

9.0 QUALITYASSURANCE/ QUALITY CONTROL

A rinsate blank is one specific type of quality control sample associated with the field decontamination process. This sample will provide information on the effectiveness of the decontamination process employed in the field.

Rinsate blanks are samples obtained by running analyte free water over decontaminated sampling equipment to test for residual contamination. The blank water is collected in sample containers for handling, shipment, and analysis. These samples are treated identical to samples collected that day. A rinsate blank is used to assess cross contamination brought about by improper decontamination procedures. Where dedicated sampling equipment is not utilized, collect one rinsate blank per day per type of sampling device samples to meet QA2 and QA3 objectives.

If sampling equipment requires the use of plastic tubing it should be disposed of as contaminated and replaced with clean tubing before additional sampling occurs.

10.0 DATA VALIDATION

Results of quality control samples will be evaluated for contamination. This information will be utilized to qualify the environmental sample results in accordance with the project's data quality objectives.

11.0 HEALTH AND SAFETY

When working with potentially hazardous materials, follow OSHA, U.S. EPA, corporate, and other applicable health and safety procedures.

Decontamination can pose hazards under certain circumstances. Hazardous substances may be incompatible with decontamination materials. For example, the decontamination solution may react with contaminants to produce heat, explosion, or toxic products. Also, vapors from decontamination solutions may pose a direct health hazard to workers by inhalation, contact, fire, or explosion.

The decontamination solutions must be determined to be acceptable before use. Decontamination materials may degrade protective clothing or equipment; some solvents can permeate protective clothing. If decontamination materials do pose a health hazard, measures should be taken to protect personnel or substitutions should be made to eliminate the hazard. The choice of respiratory protection based on contaminants of concern from the site may not be appropriate for solvents used in the decontamination process.

Safety considerations should be addressed when using abrasive and non-abrasive decontamination equipment. Maximum air pressure produced by abrasive equipment could cause physical injury. Displaced material requires control mechanisms.

Material generated from decontamination activities requires proper handling, storage, and disposal. Personal Protective Equipment may be required for these activities.

Material safety data sheets are required for all decontamination solvents or solutions as required by the Hazard Communication Standard (i.e., acetone, alcohol, and trisodiumphosphate).

In some jurisdictions, phosphate containing detergents (i.e., TSP) are banned.

12.0 REFERENCES

Field Sampling Procedures Manual, New Jersey Department of Environmental Protection, February, 1988.

A Compendium of Superfund Field Operations Methods, EPA 540/p-87/001.

Engineering Support Branch Standard Operating Procedures and Quality Assurance Manual, USEPA Region IV, April 1, 1986.

Guidelines for the Selection of Chemical Protective Clothing, Volume 1, Third Edition, American Conference of Governmental Industrial Hygienists, Inc., February, 1987.

Occupational Safety and Health Guidance Manual for Hazardous Waste Site Activities, NIOSH/OSHA/USCG/EPA, October, 1985.

APPENDIX A

Table

Table 1. Soluble Contaminants and Recommended Solvent Rinse

TABLE 1 Soluble Contaminants and Recommended Solvent Rinse		
SOLVENT[1]	EXAMPLES OF SOLVENTS	SOLUBLE CONTAMINANTS
Water	Deionized water Tap water	Low-chain hydrocarbons Inorganic compounds Salts Some organic acids and other polar compounds
Dilute Acids	Nitric acid Acetic acid Boric acid	Basic (caustic) compounds (e.g., amines and hydrazines)
Dilute Bases	Sodium bicarbonate (e.g., soap detergent)	Acidic compounds Phenol Thiols Some nitro and sulfonic compounds
Organic Solvents [2]	Alcohols Ethers Ketones Aromatics Straight chain alkalines (e.g., hexane) Common petroleum products (e.g., fuel, oil, kerosene)	Nonpolar compounds (e.g., some organic compounds)
Organic Solvent[2]	Hexane	PCBs

[1] - Material safety data sheets are required for all decontamination solvents or solutions as required by the Hazard Communication Standard

[2] - WARNING: Some organic solvents can permeate and/or degrade the protective clothing

APPENDIX B

Figures

Figure 1. Contamination Reduction Zone Layout

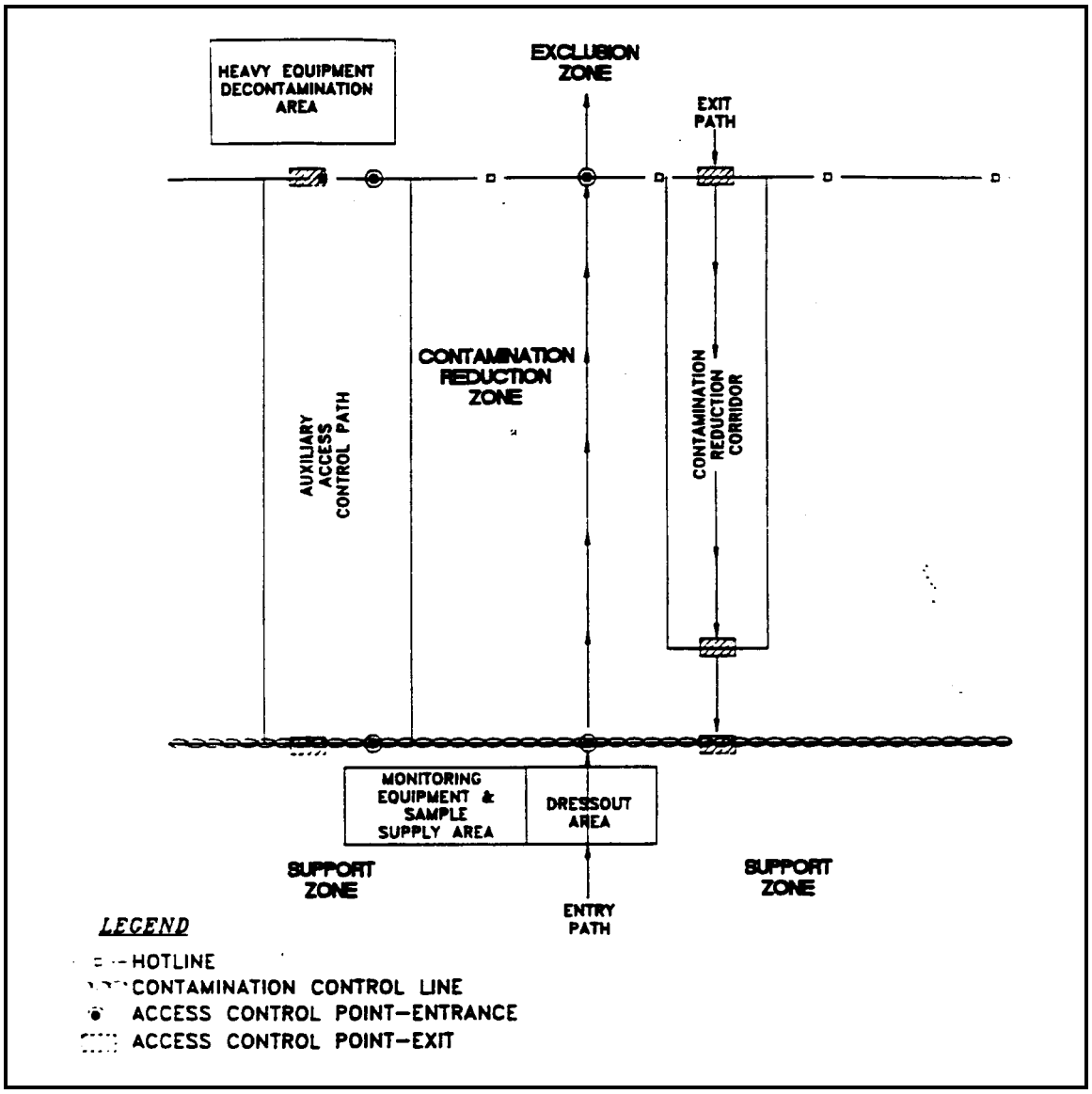

APPENDIX B (Cont'd.)

Figures

Figure 2. Decontamination Layout

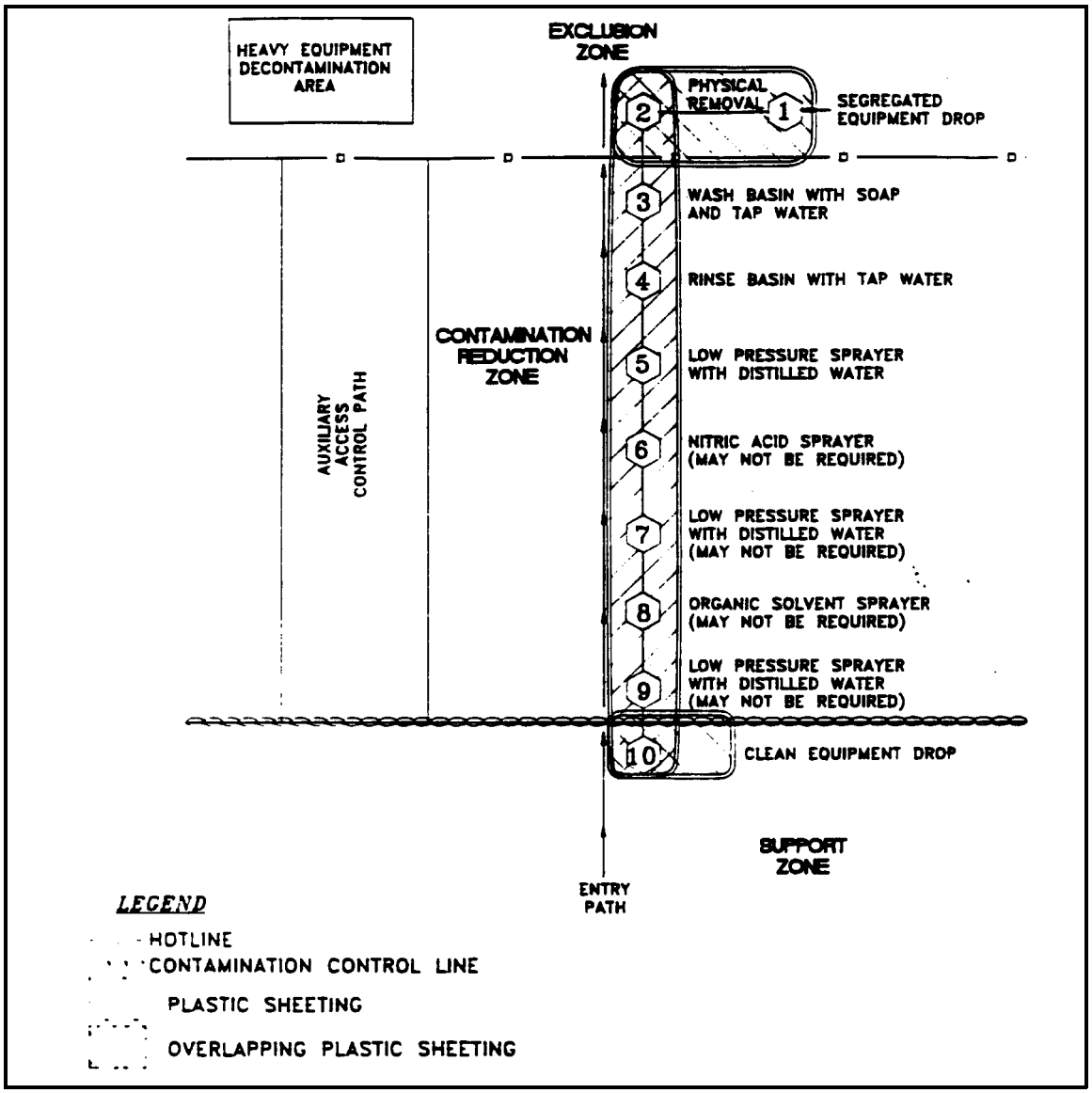

SOIL SAMPLING

SOP#: 2012
DATE: 11/16/94
REV. #: 0.0

1.0 SCOPE AND APPLICATION

The purpose of this standard operating procedure (SOP) is to describe the procedures for the collection of representative soil samples. Analysis of soil samples may determine whether concentrations of specific pollutants exceed established action levels, or if the concentrations of pollutants present a risk to public health, welfare, or the environment.

These are standard (i.e., typically applicable) operating procedures which may be varied or changed as required, dependent upon site conditions, equipment limitations or limitations imposed by the procedure. In all instances, the ultimate procedures employed should be documented and associated with the final report.

Mention of trade names or commercial products does not constitute U.S. Environmental Protection Agency (EPA) endorsement or recommendation for use.

2.0 METHOD SUMMARY

Soil samples may be collected using a variety of methods and equipment. The methods and equipment used are dependent on the depth of the desired sample, the type of sample required (disturbed vs. undisturbed), and the soil type. Near-surface soils may be easily sampled using a spade, trowel, and scoop. Sampling at greater depths may be performed using a hand auger, continuous flight auger, a trier, a split-spoon, or, if required, a backhoe.

3.0 SAMPLE PRESERVATION, CONTAINERS, HANDLING, AND STORAGE

Chemical preservation of solids is not generally recommended. Samples should, however, be cooled and protected from sunlight to minimize any potential reaction.

4.0 INTERFERENCES AND POTENTIAL PROBLEMS

There are two primary interferences or potential problems associated with soil sampling. These include cross contamination of samples and improper sample collection. Cross contamination problems can be eliminated or minimized through the use of dedicated sampling equipment. If this is not possible or practical, then decontamination of sampling equipment is necessary. Improper sample collection can involve using contaminated equipment, disturbance of the matrix resulting in compaction of the sample or inadequate homogenization of the samples where required, resulting in variable, non-representative results.

5.0 EQUIPMENT/APPARATUS

Soil sampling equipment includes the following:

- Sampling plan
- Maps/plot plan
- Safety equipment, as specified in the Health and Safety Plan
- Survey equipment
- Tape measure
- Survey stakes or flags
- Camera and film
- Stainless steel, plastic, or other appropriate homogenization bucket, bowl or pan
- Appropriate size sample containers
- Ziplock plastic bags
- Logbook
- Labels
- Chain of Custody records and seals
- Field data sheets
- Cooler(s)
- Ice
- Vermiculite
- Decontamination supplies/equipment
- Canvas or plastic sheet
- Spade or shovel

- Spatula
- Scoop
- Plastic or stainless steel spoons
- Trowel
- Continuous flight (screw) auger
- Bucket auger
- Post hole auger
- Extension rods
- T-handle
- Sampling trier
- Thin wall tube sampler
- Split spoons
- Vehimeyer soil sampler outfit
  - Tubes
  - Points
  - Drive head
  - Drop hammer
  - Puller jack and grip
- Backhoe

6.0 REAGENTS

Reagents are not used for the preservation of soil samples. Decontamination solutions are specified in the Sampling Equipment Decontamination SOP and the site specific work plan.

7.0 PROCEDURES

7.1 Preparation

1. Determine the extent of the sampling effort, the sampling methods to be employed, and the types and amounts of equipment and supplies required.

2. Obtain necessary sampling and monitoring equipment.

3. Decontaminate or pre-clean equipment, and ensure that it is in working order.

4. Prepare schedules, and coordinate with staff, client, and regulatory agencies, if appropriate.

5. Perform a general site survey prior to site entry in accordance with the site specific Health and Safety Plan.

6. Use stakes, flagging, or buoys to identify and mark all sampling locations. Specific site factors, including extent and nature of contaminant should be considered when selecting sample location. If required, the proposed locations may be adjusted based on site access, property boundaries, and surface obstructions. All staked locations will be utility-cleared by the property owner prior to soil sampling.

7.2 Sample Collection

7.2.1 Surface Soil Samples

Collection of samples from near-surface soil can be accomplished with tools such as spades, shovels, trowels, and scoops. Surface material can be removed to the required depth with this equipment, then a stainless steel or plastic scoop can be used to collect the sample.

This method can be used in most soil types but is limited to sampling near surface areas. Accurate, representative samples can be collected with this procedure depending on the care and precision demonstrated by the sample team member. A stainless steel scoop, lab spoon, or plastic spoon will suffice in most other applications. The use of a flat, pointed mason trowel to cut a block of the desired soil can be helpful when undisturbed profiles are required. Care should be exercised to avoid use of devices plated with chrome or other materials. Plating is particularly common with garden implements such as potting trowels.

The following procedure is used to collect surface soil samples:

1. Carefully remove the top layer of soil or debris to the desired sample depth with a pre-cleaned spade.

2. Using a pre-cleaned, stainless steel scoop, plastic spoon, or trowel, remove and discard a thin layer of soil from the area which came in contact with the spade.

3. If volatile organic analysis is to be performed, transfer the sample directly into an appropriate, labeled sample container with a stainless steel lab spoon, or equivalent and secure the cap tightly. Place the remainder of the sample into a stainless steel, plastic, or

other appropriate homogenization container, and mix thoroughly to obtain a homogenous sample representative of the entire sampling interval. Then, either place the sample into appropriate, labeled containers and secure the caps tightly; or, if composite samples are to be collected, place a sample from another sampling interval or location into the homogenization container and mix thoroughly. When compositing is complete, place the sample into appropriate, labeled containers and secure the caps tightly.

7.2.2 Sampling at Depth with Augers and Thin Wall Tube Samplers

This system consists of an auger, or a thin-wall tube sampler, a series of extensions, and a "T" handle (Figure 1, Appendix A). The auger is used to bore a hole to a desired sampling depth, and is then withdrawn. The sample may be collected directly from the auger. If a core sample is to be collected, the auger tip is then replaced with a thin wall tube sampler. The system is then lowered down the borehole, and driven into the soil to the completion depth. The system is withdrawn and the core is collected from the thin wall tube sampler.

Several types of augers are available; these include: bucket type, continuous flight (screw), and post-hole augers. Bucket type augers are better for direct sample recovery since they provide a large volume of sample in a short time. When continuous flight augers are used, the sample can be collected directly from the flights. The continuous flight augers are satisfactory for use when a composite of the complete soil column is desired. Post-hole augers have limited utility for sample collection as they are designed to cut through fibrous, rooted, swampy soil and cannot be used below a depth of three feet.

The following procedure will be used for collecting soil samples with the auger:

1. Attach the auger bit to a drill rod extension, and attach the "T" handle to the drill rod.

2. Clear the area to be sampled of any surface debris (e.g., twigs, rocks, litter). It may be advisable to remove the first three to six inches of surface soil for an area approximately six inches in radius around the drilling location.

3. Begin augering, periodically removing and depositing accumulated soils onto a plastic sheet spread near the hole. This prevents accidental brushing of loose material back down the borehole when removing the auger or adding drill rods. It also facilitates refilling the hole, and avoids possible contamination of the surrounding area.

4. After reaching the desired depth, slowly and carefully remove the auger from boring. When sampling directly from the auger, collect the sample after the auger is removed from the boring and proceed to Step 10.

5. Remove auger tip from drill rods and replace with a pre-cleaned thin wall tube sampler. Install the proper cutting tip.

6. Carefully lower the tube sampler down the borehole. Gradually force the tube samplerinto soil. Care should be taken to avoid scraping the borehole sides. Avoid hammering the drill rods to facilitate coring as the vibrations may cause the boring walls to collapse.

7. Remove the tube sampler, and unscrew the drill rods.

8. Remove the cutting tip and the core from the device.

9. Discard the top of the core (approximately 1 inch), as this possibly represents material collected before penetration of the layer of concern. Place the remaining core into the appropriate labeled sample container. Sample homogenization is not required.

10. If volatile organic analysis is to be performed, transfer the sample into an appropriate, labeled sample container with a stainless steel lab spoon, or equivalent and secure the cap tightly. Place the remainder of the sample into a stainless steel, plastic, or other appropriate homogenization container, and mix thoroughly to obtain a homogenous sample representative of the entire sampling interval. Then, either place the sample into appropriate, labeled containers and secure the

caps tightly; or, if composite samples are to be collected, place a sample from another sampling interval into the homogenization container and mix thoroughly.

When compositing is complete, place the sample into appropriate, labeled containers and secure the caps tightly.

11. If another sample is to be collected in the same hole, but at a greater depth, reattach the auger bit to the drill and assembly, and follow steps 3 through 11, making sure to decontaminate the auger and tube sampler between samples.

12. Abandon the hole according to applicable State regulations. Generally, shallow holes can simply be backfilled with the removed soil material.

7.2.3 Sampling at Depth with a Trier

The system consists of a trier, and a "T" handle. The auger is driven into the soil to be sampled and used to extract a core sample from the appropriate depth.

The following procedure will be used to collect soil samples with a sampling trier:

1. Insert the trier (Figure 2, Appendix A) into the material to be sampled at a 0° to 45° angle from horizontal. This orientation minimizes the spillage of sample.

2. Rotate the trier once or twice to cut a core of material.

3. Slowly withdraw the trier, making sure that the slot is facing upward.

4. If volatile organic analysis is to be performed, transfer the sample into an appropriate, labeled sample container with a stainless steel lab spoon, or equivalent and secure the cap tightly. Place the remainder of the sample into a stainless steel, plastic, or other appropriate homogenization container, and mix thoroughly to obtain a homogenous sample representative of the entire sampling interval. Then, either place the sample into appropriate, labeled containers and secure the caps tightly; or, if composite samples are to be collected, place a sample from another sampling interval into the homogenization container and mix thoroughly. When compositing is complete, place the sample into appropriate, labeled containers and secure the caps tightly.

7.2.4 Sampling at Depth with a Split Spoon (Barrel) Sampler

The procedure for split spoon sampling describes the collection and extraction of undisturbed soil cores of 18 or 24 inches in length. A series of consecutive cores may be extracted with a split spoon sampler to give a complete soil column profile, or an auger may be used to drill down to the desired depth for sampling. The split spoon is then driven to its sampling depth through the bottom of the augured hole and the core extracted.

When split spoon sampling is performed to gain geologic information, all work should be performed in accordance with ASTM D 1586-67 (reapproved 1974).

The following procedures will be used for collecting soil samples with a split spoon:

1. Assemble the sampler by aligning both sides of barrel and then screwing the drive shoe on the bottom and the head piece on top.

2. Place the sampler in a perpendicular position on the sample material.

3. Using a well ring, drive the tube. Do not drive past the bottom of the head piece or compression of the sample will result.

4. Record in the site logbook or on field data sheets the length of the tube used to penetrate the material being sampled, and the number of blows required to obtain this depth.

5. Withdraw the sampler, and open by unscrewing the bit and head and splitting the barrel. The amount of recovery and soil type should be recorded on the boring log. If a split sample is desired, a cleaned, stainless steel knife should be used to divide the tube contents in half, longitudinally. This sampler

is typically available in 2 and 3 1/2 inch diameters. However, in order to obtain the required sample volume, use of a larger barrel may be required.

6. Without disturbing the core, transfer it to appropriate labeled sample container(s) and seal tightly.

7.2.5 Test Pit/Trench Excavation

These relatively large excavations are used to remove sections of soil, when detailed examination of soil characteristics (horizontal, structure, color, etc.) are required. It is the least cost effective sampling method due to the relatively high cost of backhoe operation.

The following procedures will be used for collecting soil samples from test pit/trench excavations:

1. Prior to any excavation with a backhoe, it is important to ensure that all sampling locations are clear of utility lines, subsurface pipes and poles (subsurface as well as above surface).

2. Using the backhoe, a trench is dug to approximately three feet in width and approximately one foot below the cleared sampling location. Place excavated soils on plastic sheets. Trenches greater than five feet deep must be sloped or protected by a shoring system, as required by OSHA regulations.

3. A shovel is used to remove a one to two inch layer of soil from the vertical face of the pit where sampling is to be done.

4. Samples are taken using a trowel, scoop, or coring device at the desired intervals. Be sure to scrape the vertical face at the point of sampling to remove any soil that may have fallen from above, and to expose fresh soil for sampling. In many instances, samples can be collected directly from the backhoe bucket.

5. If volatile organic analysis is to be performed, transfer the sample into an appropriate, labeled sample container with a stainless steel lab spoon, or equivalent and secure the cap tightly. Place the remainder of the sample into a stainless steel, plastic, or other appropriate homogenization container, and mix thoroughly to obtain a homogenous sample representative of the entire sampling interval. Then, either place the sample into appropriate, labeled containers and secure the caps tightly; or, if composite samples are to be collected, place a sample from another sampling interval into the homogenization container and mix thoroughly. When compositing is complete, place the sample into appropriate, labeled containers and secure the caps tightly.

6. Abandon the pit or excavation according to applicable state regulations. Generally, shallow excavations can simply be backfilled with the removed soil material.

8.0 CALCULATIONS

This section is not applicable to this SOP.

9.0 QUALITY ASSURANCE/ QUALITY CONTROL

There are no specific quality assurance (QA) activities which apply to the implementation of these procedures. However, the following QA procedures apply:

1. All data must be documented on field data sheets or within site logbooks.

2. All instrumentation must be operated in accordance with operating instructions as supplied by the manufacturer, unless otherwise specified in the work plan. Equipment checkout and calibration activities must occur prior to sampling/operation, and they must be documented.

10.0 DATA VALIDATION

This section is not applicable to this SOP.

11.0 HEALTH AND SAFETY

When working with potentially hazardous materials,

follow U.S. EPA, OHSA and corporate health and safety procedures.

12.0 REFERENCES

Mason, B.J., Preparation of Soil Sampling Protocol: Technique and Strategies. 1983 EPA-600/4-83-020.

Barth, D.S. and B.J. Mason, Soil Sampling Quality Assurance User's Guide. 1984 EPA-600/4-84-043.

U.S. EPA. Characterization of Hazardous Waste Sites - A Methods Manual: Volume II. Available Sampling Methods, Second Edition. 1984 EPA-600/4-84-076.

de Vera, E.R., B.P. Simmons, R.D. Stephen, and D.L. Storm. Samplers and Sampling Procedures for Hazardous Waste Streams. 1980 EPA-600/2-80-018.

ASTM D 1586-67 (reapproved 1974), ASTM Committee on Standards, Philadelphia, PA.

APPENDIX A

Figures

FIGURE 1. Sampling Augers

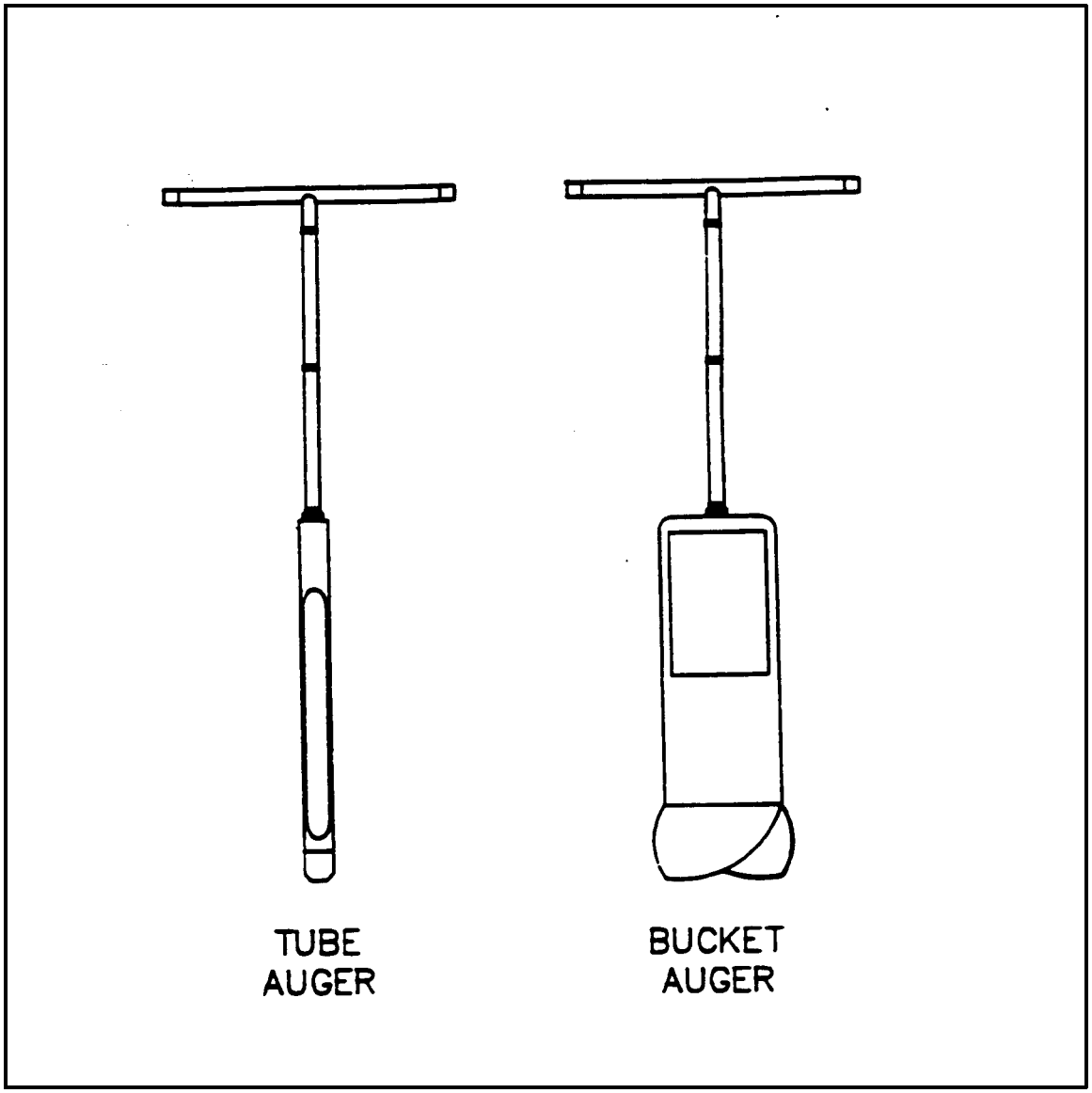

APPENDIX A (Cont'd)

Figures
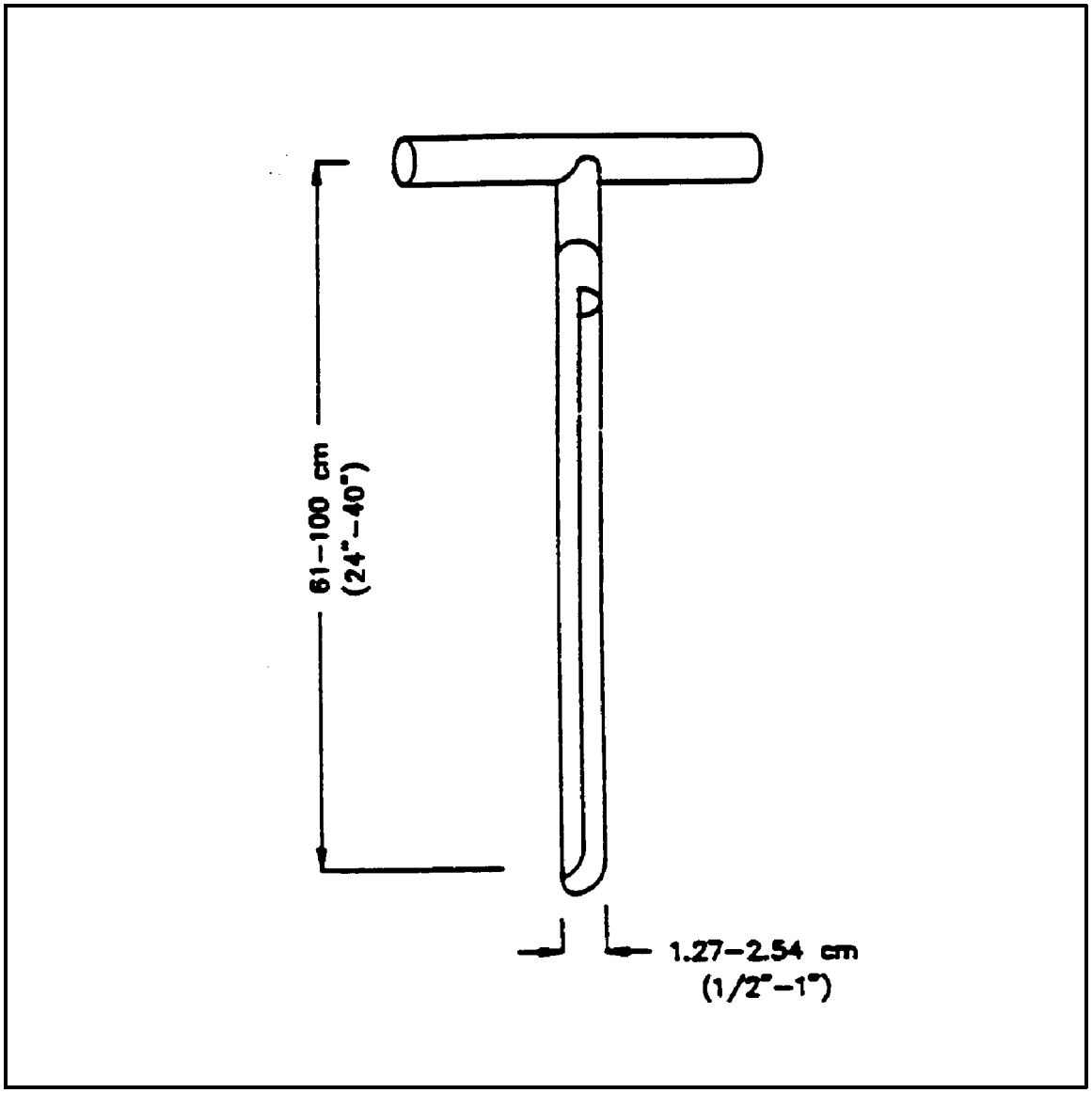
FIGURE 2. Sampling Trier