FILE LOC: R-113
OTHER: RDMS#2411

NAME: Pratt & Whitney
I.D. NO.: CTD990672081
FILE LOC: P-3
OTHER: Oversize

ADDITIONS AND MODIFICATIONS TO THE SEPTEMBER 5, 1991 RCRA PART B PERMIT APPLICATION

UNITED TECHNOLOGIES CORPORATION
PRATT & WHITNEY
MANUFACTURING DIVISION
400 MAIN STREET
EAST HARTFORD, CONNECTICUT 06108

CTD 990672081

REVISION DATE:
MARCH 23, 1992

PREPARED BY:

LOURED ENGINEERING ASSOCIATES, P.C.
CONSULTING ENGINEERS
LEA
PLAINVILLE, CT

COMM. NO. 68ET206

Fold at line over top of envelope to the right of the return address

CERTIFIED

P 125 597 170

MAIL

UNITED TECHNOLOGIES PRATT&WHITNEY

400 Main Street
East Hartford, Connecticut 06108

April 28, 1992

NAME: Pratt & Whitney
ID: CTD990672081
FILE LOC: R-1B
OTHER:

Mr. John Podgurski
Waste Management Division
U.S. EPA
Region I
JFK Federal Bldg. (HER-CAN 6)
Boston, MA 02203

Ref: RCRA Part B Application for Pratt & Whitney East Hartford
CTD990672081

Dear Mr. Podgurski:

Enclosed are two submittals of recent revisions to the RCRA Part B Application for the Pratt & Whitney facility located at 400 Main Street, East Hartford, Connecticut. Unfortunately, the March 26'th submittal was not immediately sent to your office. We regret this oversight, and we appreciate your acceptance of this copy along with a copy of an April 27'th submittal. The March 26'th document addresses clarifications requested by Lynn Clune of the Connecticut DEP. As a result of these clarifications, certain pages within the Application have been revised. The April 27'th submittal includes revisions to the Contingency Plan in Volume II-Section F, Personnel Training in Volume II-Section G, and Closure Plan and Financial Requirements in Volume III-Section H.

Thank you very much for your cooperation. If you have any questions concerning this submittal, please call Paul Guilmette at 557-0900.

Sincerely,

Timothy J. Lorette

T.J. Lorette
Manager, Facilities Engineering

TJL/PGG

UNITED TECHNOLOGIES PRATT&WHITNEY

400 Main Street
East Hartford, Connecticut 06108

March 26, 1992

Ms. Lynn M. Clune
Engineer
Waste Engineering & Enforcement Division
Department of Environmental Protection
165 Capitol Avenue
Hartford, CT 06106

RECEIVED
MAR 26 1992
DEP- Waste Management Bureau
Waste Engineering & Enforcement
Permits

Ref: RCRA Part B Application Clarification request per conversation with Bryan Kielbania

Dear Ms. Clune:

In response to Reference 1 above, P&W is pleased to submit the requested clarifications concerning the RCRA Part B Permit Application for the Pratt & Whitney facility at 400 Main Street, East Hartford, Connecticut.

Thank you very much for your cooperation. If you have any questions please call Paul Guilmette at 557-0900.

Sincerely,

R.C. Weiss
Director, Facilities & Services

RCW/PGG

cc: G. Dews, Waste Engineering and Enforcement

NAME: Pratt & Whitney
I.D. NO.: CT599067208
FILE LOC: RIB
OTHER:

RECEIVED
MAR 26 1992
DEP- Waste Management Bureau
Waste Engineering & Enforcement
Permits

PRATT & WHITNEY EAST HARTFORD
RCRA PART B PERMIT APPLICATION

Summary of Response
to
CT DEP Comments Transmitted to Bryan Kielbania(P&W)
from Lynn Clune(DEP) via Telephone

March 23, 1992

United Technologies Corporation
Pratt & Whitney
400 Main Street
East Hartford, CT
EPA ID. No. CTD990672081

NOTE: DEP COMMENTS ARE PARAPHRASED IN BOLD TYPE FOLLOWED BY P&W's RESPONSE IN ITALIC TYPE.

1. Containment computations presented on Figure D-2 need to be clarified to show displacement volume for all container types and transporter storage configurations.

Figure D-2 has been revised to show transporter storage configurations and to more clearly describe displacement volumes for various container types along with the impacts these displacement volumes have on secondary containment volume. In addition, a typical bulk tank containment area cross section has been added to this drawing.

2. Explain why the waste codes listed in Exhibit C-1 Table 3 do not match those listed in the RCRA Part A Permit.

The RCRA Part A Permit contains waste codes for all waste types which have been or may be generated at the facility while Table 3 includes waste codes for waste streams which are routinely managed at the facility. Many of the codes listed in the Part A Permit describe virgin product and laboratory chemicals which are used at the Plant and which would be hazardous waste when discarded. However, these materials are not routinely discarded and therefore are not listed in Table 3. When a waste stream bearing one of these waste codes is managed at the Facility, it would be managed following the procedures described in the RCRA Part B Permit Application for future waste streams.

The Part A Permit also lists all of the D codes for characteristic wastes. Some of these codes may apply to listed wastes which are currently generated on a routine basis and are included in Table 3, and some may apply to wastes which may be generated in the future, particularly as a result of site remediation activities. Currently generated listed wastes which are included in Table 3 are described only by the listed waste code in those cases where the treatment standard for the listed waste includes a treatment standard for the constituent that causes the waste to exhibit the characteristic. As discussed previously, when wastes which are not included in Table 3 are managed at the Facility, these wastes will be handled as described in the permit application for future waste streams.

3. Waste streams with an NFPA Health Hazard rating of 4 will require specialized management practices.

As a result of DEP's comment, the waste streams which were assigned health hazard ratings of 4 were re-evaluated to ensure that this rating is appropriate. The original assignment of NFPA Hazard Ratings was based on a procedure which identified waste constituents through review of process descriptions and MSDS sheets. Reference documents were then consulted to look-up hazard rating values commonly assigned to each individual constituent at full strength. Hazard ratings were then assigned to the waste stream by selecting the most severe ratings assigned to any constituent. The relative concentrations of each constituent and the properties of the actual waste stream were not evaluated in this process. As a result, the following waste streams were assigned health ratings of 4:

Waste ID. No.	*Description*
0008	*Hydrofluoric Acid (PMC 1010)*
0023	*Alkali Cleaner (Lt. Duty -PMC 1252)*
0081	*Sodium Carbonate (PMC 1510)*
1533	*Titanium Etching Solution (PS 38)*
1541	*Nitric-Hydrofluoric Solution (PS 48)*
1542	*Hydrofluoric-Nitric Solution (PS 49)*
1547	*Sulfuric-Hydrofluoric Solution (PS 54)*
1657	*Descaling Solution (PS 222)*
1822	*Hydrofluoric-Nitric Solution (PS 645)*
1825	*Nitric-Hydrofluoric Solution (PS 648)*
1703	*Columbian Cleaning Solution (PS 281)*

The re-evaluation of these waste streams involved collecting samples of the waste, performing physical-chemical evaluations of the samples to better understand the inherent hazards of the material, and assigning numerical ratings based on this understanding of the inherent hazards, including the extent of change in behavior to be anticipated under conditions of exposure to fire or fire control procedures. The hazard ratings were assigned using the criteria established in NFPA 704 "Standard System for the Identification of the Fire Hazards of Materials". The physical-chemical properties of the wastes were evaluated using the Hazcat Chemical Identification System.

This procedure was not performed on all of the waste streams listed in the table presented above. Two of the waste streams, Nos. 0023 (Alkali Cleaner-PMC 1252) and 0081 (Sodium Carbonate-PMC 1510), appear to have been inadvertently or mistakenly assigned health ratings of 4. These alkaline materials would generally be assigned health ratings of 2 or less. Two other waste streams, 0008 (Hydrofluoric Acid-PMC 1010) and 1533 (Titanium Etching Solution-PS 38) were not available for sampling at the time the evaluations were performed. These waste streams will be re-evaluated at some time in the future. In the meantime, if these wastes are generated and managed at the facility prior to being re-evaluated, they will be handled in accordance with the special procedures to be specified by DEP in the RCRA Part B Permit.

The results of the evaluations performed on the waste streams which were available for testing are summarized in the table presented below:

		Hazard Ratings		
Waste ID. No.	Health	Flammability	Reactivity	Special
1541	3	0	0	Oxidizer
1542	3	0	0	Oxidizer
1547	3	0	0	N/A
1657	3	0	0	Oxidizer
1703	3	0	0	Oxidizer
1822	3	0	0	Oxidizer
1825	3	0	0	Oxidizer

The Hazcat evaluations of these waste streams included testing for Nitrates, Oxidizers, Fluorine, and Sulfates as well as other acids and metals. Physical properties such as pH, oxidizing potential, reactivity, and flammability were also evaluated. Specific measurements for head space vapors of nitrogen dioxide were taken and compared to current exposure standards. Based on the presence of chemicals in the solutions, their respective concentrations and observed behavior, a rating of hazard severity was assigned. The health hazard rating of 3 was assigned since these solutions have the potential to emit vapors that represent respiratory and skin hazards particularly under conditions of exposure to fire.

4. Where will B2 and high flash oils be stored?

Table D-2 and Figure D-3 have been modified to identify the initial storage locations for B2 and high flash oils. High flash oils will be stored in bulk tank numbers 12 and 13 while B2 oil will be stored in bulk tank number 15.

5. Are lab packs shipped from the United Technologies Research Center to the East Hartford Plant?

No, only lab packs generated on-site are managed at the Facility.

6. Provide a description of the procedures used to manage lab packs at the East Hartford Facility.

The Facility is currently developing a written procedure for handling lab packs which is expected to be completed by July 1, 1992. P&W is requesting a compliance step in the Part B Permit to address this item.

7. Provide instructions for the screening test kits utilized at the Facility.

P&W does not believe that it is appropriate to submit these instructions in the permit application. The particular test kits used and/or the instructions pertaining to the use of the test kit may change from time to time. However, the test kits utilized are commercially available and the instructions provided with the kits are maintained on file at the Facility. DEP is welcome to review the instructions for the currently used test kits on-site.

8. Provide initial assignments of waste groupings to be stored in each container storage area within the Centralized Waste Storage and Transfer Facility.

P&W cannot provide these assignments. The facility has been designed to allow use of a particular container storage area for a variety of waste groupings. The waste groupings at any particular time will be determined based on the flow of waste into and out of the Facility and compatibility determinations made using RGN's, the Industrial Waste Tracking System and the Facility Computer System. In addition, a procedure has been included in the RCRA Part B Permit Application for decontaminating a particular container storage area to allow its use for storage of a grouping which is incompatible with the grouping the area was previously used for.

9. Provide information regarding branch Plant compliance with the East Hartford Waste Analysis Plan.

Branch Plants (other UTC facilities) will comply with East Hartford Waste Analysis Plan provisions for hazardous waste sent to the CWS&TF. The East Hartford facility will require a waste analysis on file for each hazardous waste received at the facility. Wastes with no analysis will not be accepted. Re-characterization will be required for wastes that change in characteristic or process, or which do not conform their descriptions received. Annual updates on analytical information will be provided and maintained on file.

10. What is the status of the new transporters?

New "Tuff Tank" transporters have been purchased, received, and have been put into service by satellite facilities. There are still a few of the 375-gallon transporters remaining at the satellite facilities that have not yet been returned to East Hartford. They will be accepted with their waste contents, but no 375-gallon transporters will be re-issued by East Hartford. The 375-gallon transporters are still in use in East Hartford, but their general use will be phased out by July, 1992. However, some of these transporters may be used to store such wastes as fixer solution until the bulk storage tanks in the CWS&TF become available.

11. Modifications Initiated by Applicant.

In addition to the revisions to the application made in response to DEP's questions and comments, P&W has provided updated information pertaining to the bulk storage tanks, a new 180-gallon transporter and two additional less than ninety day storage areas.

Several pages of text and two figures in Section D of the RCRA Part B Permit Application have been revised to reflect final design of the bulk storage tanks located in the Centralized Waste Storage and Transfer Facility. The revised information includes compatibility data for the tank and pipe materials and linings.

P&W is also submitting information new 180-gallon transporters which will be used at the Facility. These transporters are similar to the 220- and 330-gallon transporters described previously in the application.

Lastly, P&W is submitting information for two additional less than ninety day storage areas. The additional information is in the form of text and drawing revisions to the Contingency Plan and additional inspection logs in the Inspection Plan.

The revisions are being submitted in the form of revised pages and figures. Instructions are provided for updating the September 5, 1992 permit application to reflect these changes.

INSTRUCTIONS FOR INCORPORATING ADDITIONS AND MODIFICATIONS TO THE SEPTEMBER 5, 1991 RCRA PART B PERMIT APPLICATION FOR

United Technologies Corporation
Pratt & Whitney
400 Main Street
East Hartford, CT
EPA ID. No. CTD990672081

RECEIVED
MAR 26 1992
DEP- Waste Management Bureau
Waste Engineering & Enforcement
Permits

REVISION DATE: March 23, 1992

ITEM	REMOVE PAGES	REPLACE PAGES
VOLUME II-SECTION D	40	40
	41 FIGURE D-2	41 FIGURE D-2
	43 THROUGH 49	43 THROUGH 49
	51	51
	52 EXHIBIT D-3	52 EXHIBIT D-3
	60	60
	61 FIGURE D-3	61 FIGURE D-3
	65 & 66	65 & 66
	67 EXHIBIT D-6	67 EXHIBIT D-6
	70 THROUGH 72	70 THROUGH 72
VOLUME II-SECTION E	92 EXHIBIT E-2	92 EXHIBIT E-2
VOLUME II-SECTION F	EXHIBIT F-1 PAGE E-3	EXHIBIT F-1 PAGE E-3
	EXHIBIT F-1 PAGE E-4	EXHIBIT F-1 PAGE E-4
	EXHIBIT F-1 FIGURE 5	EXHIBIT F-1 FIGURE 5

INSTRUCTIONS FOR INCORPORATING ADDITIONS AND MODIFICATIONS TO THE SEPTEMBER 5, 1991 RCRA PART B PERMIT APPLICATION FOR

United Technologies Corporation
Pratt & Whitney
400 Main Street
East Hartford, CT
EPA ID. No. CTD990672081

REVISION DATE: March 23, 1992

ITEM	REMOVE PAGES	REPLACE PAGES
VOLUME II-SECTION D	40	40
	41 FIGURE D-2	41 FIGURE D-2
	43 THROUGH 49	43 THROUGH 49
	51	51
	52 EXHIBIT D-3	52 EXHIBIT D-3
	60	60
	61 FIGURE D-3	61 FIGURE D-3
	65 & 66	65 & 66
	67 EXHIBIT D-6	67 EXHIBIT D-6
	70 THROUGH 72	70 THROUGH 72
VOLUME II-SECTION E	92 EXHIBIT E-2	92 EXHIBIT E-2
VOLUME II-SECTION F	EXHIBIT F-1 PAGE E-3	EXHIBIT F-1 PAGE E-3
	EXHIBIT F-1 PAGE E-4	EXHIBIT F-1 PAGE E-4
	EXHIBIT F-1 FIGURE 5	EXHIBIT F-1 FIGURE 5

Please print or type with ELITE type (12 characters per inch) in the unshaded areas only

Form Approved OMB No. 2050-0024 Expires 12-31-91
GSA No. 0246-EPA-OT

EPA Regional Use Only

EPA

United States Environmental Protection Agency
Washington, DC 20460

Hazardous Waste Permit Application Part A

(Read the Instructions before starting)

Date Received
Month Day Year

I. ID Number(s)

ID Number	Subsidiary ID Number (if applicable)
CTD990672081	

Name of Facility

PRATT & WHITNEY

Facility Location (Physical address not P.O. Box or Route Number)

Street

400 MAIN STREET

Street (continued)

City or Town	State	ZIP Code
EAST HARTFORD	CT	06108

County Code (if applicable)	County Name
	HARTFORD

B. Land Type (Enter code)	C. Geographic Location		D. Facility Existence Date
	LATITUDE (degrees, minutes, & seconds)	LONGITUDE (degrees, minutes, & seconds)	Month Day Year
C	41 45 00	72 38 01	1930

IV. Facility Mailing Address

Street or P.O. Box

SAME

City or Town	State	ZIP Code

V. Facility Contact (Person to be contacted regarding waste activities at facility)

Name (last)	(first)
WEISS	RALPH

Job Title	Phone Number (area code and number)
DIR FAC & SERV	203-565-4887

VI. Facility Contact Address (See instructions)

A. Contact Address Location	Mailing	B. Street or P.O. Box
X		

City or Town	State	ZIP Code

Please print or type with ELITE type (12 characters per inch) in the unshaded areas only

Form Approved OMB No. [illegible] GSA No. [illegible]

C T D 9 9 0 6 7 2 0 8 1	Secondary ID Number (enter from page 1)

[illegible]

U N I T E D T E C H N O L O G I E S C O R P

	State	ZIP Code

	B. Operator Type	C. Change of Operator Indicator	Date Changed
- -	P	Yes / No X	Month / Day / Year

[illegible]

S A M E A S O P E R A T O R

	State	ZIP Code

[illegible] (area code and number)	B. Owner Type	C. Change of Owner Indicator	Date Changed
- -		Yes / No	Month / Day / Year

[illegible] (in order of significance)

Primary	Secondary
3 7 2 4 (description) Jet Engine Manufacturer	(description)
Secondary	**Secondary**
(description)	(description)

X. Other Environmental Permits (see instructions)

A. Permit Type	B. Permit Number	C. Description
N	C T 0 0 0 1 3 7 6	
E	5 3 - 0 0 1 7	CT EMISSIONS PERMIT
E	5 3 - 0 0 1 8	" " "
E	5 3 - 0 0 1 9	" " "
E	5 3 - 0 0 2 0	" " "
E	5 3 - 0 0 2 2	" " "
E	5 3 - 0 0 2 4	" " "
E	5 3 - 0 0 2 7	" " "
E	5 3 - 0 0 4 7	" " "

C	T	D	9	9	0	6	7	2	0	8	1

Manufacture Jet Engines and Parts

PROCESS CODE	PROCESS	APPROPRIATE UNITS OF MEASURE FOR PROCESS DESIGN CAPACITY
	DISPOSAL:	
D79	INJECTION WELL	GALLONS; LITERS; GALLONS PER DAY; OR LITERS PER DAY
D80	LANDFILL	ACRE-FEET OR HECTARE-METER
D81	LAND APPLICATION	ACRES OR HECTARES
D82	OCEAN DISPOSAL	GALLONS PER DAY OR LITERS PER DAY
D83	SURFACE IMPOUNDMENT	GALLONS OR LITERS
	STORAGE:	
S01	CONTAINER (barrel, drum, etc.)	GALLONS OR LITERS
S02	TANK	GALLONS OR LITERS
S03	WASTE PILE	CUBIC YARDS OR CUBIC METERS
S04	SURFACE IMPOUNDMENT	GALLONS OR LITERS
	TREATMENT:	
T01	TANK	GALLONS PER DAY OR LITERS PER DAY
T02	SURFACE IMPOUNDMENT	GALLONS PER DAY OR LITERS PER DAY
T03	INCINERATOR	SHORT TONS PER HOUR; METRIC TONS PER HOUR; GALLONS PER HOUR; LITERS PER HOUR; OR BTU'S PER HOUR
T04	OTHER TREATMENT (Use for physical, chemical, thermal or biolgical treatment processes not occurring in tanks, surface impoundment or incinerators. Describe the processes in the space provided in Item XIII.)	GALLONS PER DAY; LITERS PER DAY; POUNDS PER HOUR; SHORT TONS PER HOUR; KILOGRAMS PER HOUR; METRIC TONS PER DAY; METRIC TONS PER HOUR; OR SHORT TONS PER DAY

UNIT OF MEASURE	UNIT OF MEASURE CODE
GALLONS	G
GALLONS PER HOUR	E
GALLONS PER DAY	U
LITERS	L
LITERS PER HOUR	H
LITERS PER DAY	V
SHORT TONS PER HOUR	D
METRIC TONS PER HOUR	W
SHORT TONS PER DAY	N
METRIC TONS PER DAY	S
POUNDS PER HOUR	J
KILOGRAMS PER HOUR	R
CUBIC YARDS	Y
CUBIC METERS	C
ACRES	B
ACRE-FEET	A
HECTARES	Q
HECTARE-METER	F
BTU's PER HOUR	K

C	T	D	9	9	0	6	7	2	0	8	1

... A facility has two storage tanks, one tank can hold 200 ... 400 gallons. The facility also has an incinerator that can burn up to 20 gallons per hour.

A. PROCESS CODE			B. PROCESS DESIGN CAPACITY: 1. AMOUNT (specify)	2. UNIT OF MEASURE (enter code)	C. PROCESS TOTAL NUMBER OF UNITS			FOR OFFICIAL USE ONLY
S	0	2	[illegible]	G	0	0	2	
T	0	3	20	E	0	0	1	
S	0	1	68,000	G				
S	0	2	126,000	G				

...(s) with ... used for additional treatment process ...

Additional Treatment Processes ...

A. PROCESS CODE	B. TREATMENT PROCESS DESIGN CAPACITY: 1. AMOUNT (specify)	2. UNIT OF MEASURE	C. PROCESS TOTAL NUMBER OF UNITS	D. DESCRIPTION OF PROCESS
T 0 4				
T 0 4				
T 0 4				
T 0 4				

Please print or type with ELITE type (12 characters per inch) in the unshaded areas only.

[illegible] (page 1) [illegible] Facility ID Number (from Item 1 page 1)

C	T	D	9	9	0	6	7	2	0	3	1

[illegible] of Hazardous Wastes

[illegible] HAZARDOUS WASTE NUMBER - Enter the [illegible] Part 261 [illegible] each listed hazardous waste [illegible] handle. For hazardous wastes which are [illegible] Part 261 Subpart D, enter the four-digit number(s) from 40 [illegible] Part 261 Subpart C that describes the characteristic or toxic contaminant of those hazardous wastes.

[illegible] ESTIMATED ANNUAL QUANTITY - For each listed waste entered in Column A estimate the quantity of that waste that will be handled on an annual basis. For each characteristic or toxic contaminant entered in column A estimate the total annual quantity of all the non-listed waste(s) that will be handled which possess that characteristic or contaminant.

[illegible] UNIT OF MEASURE - For each quantity entered in column B enter the unit of measure code. Units of measure which must be used and the appropriate codes are:

ENGLISH UNIT OF MEASURE	CODE	METRIC UNIT OF MEASURE	CODE
POUNDS	P	KILOGRAMS	K
TONS	T	METRIC TONS	M

[illegible] records use any other unit of measure for quantity, the units of measure must be converted into one of the required units [illegible] taking into account the appropriate density or specific gravity of the waste.

[illegible] PROCESSES

[illegible] PROCESS CODES:

For listed hazardous waste: For each listed hazardous waste entered in column A select the code(s) from the list of process codes contained in Item XII A. on page 3 to indicate how the waste will be stored, treated, and/or disposed of at the facility.

For non-listed hazardous waste: For each characteristic or toxic contaminant entered in column A, select the code(s) from the list of process codes contained in Item XII A. on page 3 to indicate all the processes that will be used to store, treat, and/or dispose of all the non-listed hazardous wastes that possess that characteristic or toxic contaminant.

NOTE: THREE SPACES ARE PROVIDED FOR ENTERING PROCESS CODES. IF MORE ARE NEEDED:

1. Enter the first two as described above.
2. Enter "000" in the extreme right box of Item XIV-[illegible]
3. Enter in the space provided on page 7, Item XIV-[illegible] the line number and the additional code(s).

[illegible] PROCESS DESCRIPTION - If a code is not listed for a process that will be used, describe the process in the space provided on the form (page [illegible]).

NOTE: HAZARDOUS WASTES DESCRIBED BY MORE THAN ONE EPA HAZARDOUS WASTE NUMBER - Hazardous wastes that can be described by more than one EPA Hazardous Waste Number shall be described on the form as follows:

1. Select one of the EPA Hazardous Waste Numbers and enter it in column A. On the same line complete columns B, C and D by estimating the total annual quantity of the waste and describing all the processes to be used to treat, store, and/or dispose of the waste.
2. In column A of the next line enter the other EPA Hazardous Waste Number that can be used to describe the waste. In column D(2) on that line enter "included with above" and make no other entries on that line.
3. Repeat step 2 for each EPA Hazardous Waste Number that can be used to describe the hazardous waste.

[illegible] FOR COMPLETING ITEM XIV (shown in the examples X-1, X-2, X-3, and X-4 below) - A facility will treat and dispose of estimated 900 pounds per year of chrome shavings from leather tanning and finishing operations. In addition, the facility will treat and dispose of three non-listed wastes. Two wastes are corrosive only and there will be an estimated 200 pounds per year of each waste. The other waste is corrosive and ignitable and there will be an estimated 100 pounds per year of that waste. Treatment will be in an incinerator and disposal will be in a landfill.

Line Number	A. EPA HAZARD WASTE NO. (enter code)	B. ESTIMATED ANNUAL QUANTITY OF WASTE	C. UNIT OF MEASURE (enter code)	D. PROCESS (1) PROCESS CODES (enter)	D. PROCESS (2) PROCESS DESCRIPTION (if a code is not entered in D(1))
X-1	K 0 9 4	900	P	T 0 3 D 8 0	
X-2	D 0 0 2	400	P	T 0 3 D 8 0	
X-3	D 0 0 1	100	P	T 0 3 D 8 0	
X-4	D 0 0 2				Included With Above

Please print or type with ELITE type (12 characters per inch) in the unshaded areas only

Form Approved. OMB No. 2050-0034 Expires 12-31-91
GSA No. 0246-EPA-GT

C T D 9 9 0 6 7 2 0 8 1

Line															
1	F	0	0	7	370*	T	S	0	1	S	0	2			
2	F	0	0	8											Included with line 1
3	F	0	0	9											"
4	P	0	2	9											"
5	P	0	3	0											"
6	P	0	9	8											"
7	P	1	0	4											"
8	P	1	0	6											"
9	D	0	0	1	6600	T	S	0	1	S	0	2			
10	D	0	0	2											Included with line 8
11	D	0	0	3											"
12	D	0	0	4											"
13	D	0	0	5											"
14	D	0	0	6											"
15	D	0	0	7											"
16	D	0	0	8											"
17	D	0	0	9											"
18	D	0	1	0											"
19	D	0	1	1											"
20	U	1	3	3											"
21	U	1	3	4											"
22	U	1	8	8											"
23	U	2	0	1											"
24	F	0	0	1	370	T	S	0	1	S	0	2			
25	F	0	0	2											Included with line 23
26	F	0	0	3											"
27	F	0	0	4											"
28	F	0	0	5											"
29	U	0	0	2											"
30	U	0	1	9											"
31	U	0	2	1											"
32	U	0	3	1											"
33	U	0	4	4											"

Please print or type with ELITE type (12 characters per inch) in the unshaded areas only

Form Approved OMB No. 2050-0034 Expires 12-31-91
GSA No. 0248-EPA-OT

C	T	D	9	9	0	6	7	2	0	8	1

U	0	5	2												Included with line 23
U	0	5	4												"
U	0	5	5												"
U	0	5	6												"
U	0	7	7												"
U	0	8	0												"
U	1	0	8												"
U	1	1	2												"
U	1	2	1												"
U	1	2	2												"
U	1	3	8												"
U	1	4	0												"
U	1	4	4												"
U	1	5	1												"
U	1	5	4												"
U	1	5	9												"
U	1	6	1												"
U	1	6	5												"
U	2	1	0												"
U	2	1	1												"
U	2	2	0												"
U	2	2	3												"
U	2	2	6												"
U	2	2	8												"
U	2	3	9												"
F	0	0	6	6000	P	S	0	1							

Please print or type with ELITE type (12 characters per inch) in the unshaded areas only

Form Approved. OMB No. 1550-0024 Expires 10-31-93
GSA No. 0249-EPA-01

C	T	D	9	9	0	6	7	2	0	8	1																		

Secondary ID Number (enter from page 1)

XIV. Description of Hazardous Waste

Line Number		D. PROCESSES															
								(1) PROCESS CODES (enter)									(2) PROCESS DESCRIPTION (If a process is not entered in (D)(1))
	1	D	0	1	8	40,000	P	S	0	1	S	0	2				
	2	D	0	2	2												Included with above
	3	D	0	2	8												"
	4	D	0	2	9												"
	5	D	0	3	5												"
	6	D	0	3	7												"
	7	D	0	3	9												"
	8	D	0	4	0												"
	9	D	0	4	3												"
	10	D	0	0	4	1	T	S	0	1	S	0	2				
	11	D	0	0	5												Included with line 11
	12	D	0	0	6												"
	13	D	0	0	7												"
	14	D	0	0	8												"
	15	D	0	0	9												"
	16	D	0	1	0												"
	17	D	0	1	1												"
	18	D	0	1	2												"
	19	D	0	1	3												"
	20	D	0	1	4												"
	21	D	0	1	5												"
	22	D	0	1	6												"
	23	D	0	1	7												"
	24	D	0	1	9												"
	25	D	0	2	0												"
	26	D	0	2	1												"
	27	D	0	2	3												"
	28	D	0	2	4												"
	29	D	0	2	5												"
	30	D	0	2	6												"
	31	D	0	2	7												"
	32	D	0	3	0												"
	33	D	0	3	1												"

Please print or type with ELITE type (12 characters per inch) in the unshaded areas only

Form Approved. OMB No. 2050-0034 Expires 12-31-91
GSA No. 0246-EPA-GT

C	T	D	9	9	0	6	7	2	0	8	1

		D	0	3	2												Included with line 11
		D	0	3	3												"
		D	0	3	4												"
		D	0	3	6												"
		D	0	3	8												"
		D	0	4	1												"
		D	0	4	2												"

Please print or type with ELITE type (12 characters per inch) in the unshaded areas only

Form Approved. OMB No. 2050-0034 Expires 12-31-91
GSA No. 0246-EPA-07

EPA I.D. Number (enter from page 1)	Secondary ID Number (enter from page 1)
D 9 9 0 6 7 2 0 8 1	

escription of Hazardous Waste (continued)

E. USE THIS SPACE TO LIST ADDITIONAL PROCESS CODES FROM ITEM D(1) ON PAGE 6.

Line Number	Additional Process Codes (enter)

XV. Map

Attach to this application a topographic map of the area extending to at least one mile beyond property boundaries. The map must show the outline of the facility, the location of each of its existing and proposed intake and discharge structures, each of its hazardous waste treatment, storage, or disposal facilities, and each well where it injects fluids underground. Include all springs, rivers and other surface water bodies in this map area. See instructions for precise requirements.

XVI. Facility Drawing

All existing facilities must include a scale drawing of the facility (see instructions for more detail).

Photographs

All existing facilities must include photographs (aerial or ground-level) that clearly delineate all existing structures; existing storage, treatment and disposal areas; and sites of future storage, treatment or disposal areas (see instructions for more detail).

XVIII. Certification(s)

I certify under penalty of law that I have personally examined and am familiar with the information submitted in this and all attached documents, and that based on my inquiry of those individuals immediately responsible for obtaining the information, I believe that the submitted information is true, accurate, and complete. I am aware that there are significant penalties for submitting false information, including the possibility of fine and imprisonment.

Owner Signature	Date Signed
R.C. Weiss (PDR)	1/31/91
Name and Official Title (type or print): R.C. Weiss, Director Facilities & Services	
Operator Signature	Date Signed
Name and Official Title (type or print)	

XIX. Comments

Note: Mail completed form to the appropriate EPA Regional or State Office. (refer to instructions for more information)

containment volume will be provided throughout the CWS&TF are shown on Figure D-2.

Each of the container storage areas will be separated by a barrier to prevent the spray of liquid from a punctured container from reaching an adjacent storage area. The top of the barriers will be approximately four feet above the curb. The barriers will be constructed of "Verticell" sandwich panels with 1/4-inch prefinished masonite exteriors. The panel support system will be aluminum. If the barriers are damaged, the damaged components can be easily replaced.

Four truck pads will be provided for tanker truck loading/ unloading and for box trailer loading/unloading.

As previously discussed, each truck pad will have a moderate pitch into the building with a relatively level area at the truck dock so that box trailers and tanker trucks would be essentially level for loading and unloading. The fork lift ramp has been designed to allow entrance of special lifting equipment into the container storage area if this is needed.

The fork lift ramp has a slope of three feet - three inches over 67 feet, or just under five percent.

A vinyl ester resin system will be used as a universal coating on all surfaces of the building slabs, all vertical containment surfaces, and all other surfaces up to one foot above the slab. This coating will resist the effects of the wastes which will be managed at the facility as described in Section C of the Permit Application. The coating systems proposed are not intended for immersion service;

FIGURE D-2

Floor Plans and
Containment Capacity Computations

US EPA New England
RCRA Document Management System
Image Target Sheet

RDMS Document ID # 2411

Facility Name: PRATT & WHITNEY - MAIN STREET

Facility ID#: CTD990672081

Phase Classification: R-1B

Purpose of Target Sheet:

[X] Oversized (in Site File) [ ] Oversized (in Map Drawer)

[ ] Page(s) Missing (Please Specify Below)

[ ] Privileged [ ] Other (Provide Purpose Below)

Description of Oversized Material, if applicable:

FIGURE D-2: FLOOR PLAN AND CONTAINMENT CAPACITY COMPUTATIONS

[X] Map [ ] Photograph [ ] Other (Specify Below)

* Please Contact the EPA New England RCRA Records Center to View This Document *

consequently removal of accumulations of liquids in sumps and appropriate cleaning and removal of spills within reasonable time frames will be required to maintain continued effectiveness of the coating systems. Manufacturer's chemical resistance data for the protective coatings is presented in Exhibit D-1.

A laminated floor coating system will be used on all floors. Metal deck walkway and mezzanine surfaces will be coated with a similar material designed for use on steel.

All vertical surfaces up to one foot above the floor will receive a vinyl ester coating.

Wall surfaces more than one foot above the floor will be coated with an epoxy finish.

Tank containments will receive the vinyl ester coating system to the full height of the containment. Support piers and mounting bolts will be coated as an integral part of the containment coating system.

Structural and other steel surfaces will be coated in a manner similar to that described for walls more than 1 foot above the floor using similar materials, but designed for use on steel, except that the roof girders, joists and metal deck will receive an alkyd type coating.

All coatings will be applied in accordance with manufacturers instructions.

The CWS&TF will include a control room which will house desks, files, the facility computer system, control center for all instrumentation, alarms, security, communications and other supervisory functions. The control room areas will be air conditioned

and will have finished ceilings, walls, and floors. The facility will also include an electrical room for the MCC and other electrical equipment and a mechanical room for incoming services (water, air, steam, condensate, fire, electrical). This will provide an area for water meters, pressure regulators, fire valves, hot water heater, and other facilities as needed. In addition, a section in the southwest corner will be used for a second fire main service and foam fire fighting system.

Two toilet rooms will be provided, one for men and one for women. Sanitary drains will be piped out the east end of the building to the relocated sanitary sewer in Willow Street.

Potable water will be metered in the mechanical room where a backflow preventor will be provided. Cold water will be piped to the following:

- Two toilet rooms
- Drinking fountain (located only at the east end of the building for access to sanitary drain).
- Emergency showers and eyewashes located at several points throughout the facility.

A hot water heater will be provided in the mechanical room. Hot water will be piped to the toilet rooms and each of the four container unloading stations.

Roof drains will be piped overhead to the west, north, and south walls and leaders will be piped inside the building to new drains leading to the storm drainage system.

The entire CWS&TF will be sprinklered. The system has been designed for 0.3 gallon per minute per square foot over 3000 square feet in all areas, using water with AFFF foam in the west end of the

building where ignitables are stored, and using water only in the remainder of the building. The west end of the building will be supplied water from the existing 12-inch fire main in Willow Street through a riser in the fire protection room in the southwest corner of the building. The remainder of the building will be supplied from the 8-inch fire main and riser in the mechanical room at the east end of the building.

Heating of the CWS&TF will be provided by steam for all areas. A 4-inch diameter, 30 psig service and 2-inch condensate return line will be provided.

Winter heat and year round ventilation will be provided by air handlers equipped with intake fans and steam coils. Exhaust air ventilation will be provided by exhaust fans paired with each air handler.

The ventilation system within the tank storage and truck pad areas will provide approximately two air changes per hour and will operate continually. This rate of ventilation will dilute any fumes during transfer operations and will meet the fire safety requirement of 1.0 CFM air exhaust per square foot of floor area during any liquid transfer operation. Also, the accumulation of exhaust fumes as trucks enter and leave the facility will be minimized. A separate exhaust fan will be provided to vent truck exhaust where trucks are required to operate within the building. A vapor barrier wall will be provided between truck pad No. 4 and tank Nos. 16-19. The heating system will maintain a temperature of approximately 55°F in this area.

The storage tanks will be provided with enclosed tops so that losses due to evaporation will be minimized. Vapor displacement during filling or emptying or due to temperature variations would be vented, however. Normally closed conservation vents with vacuum breakers will be provided on each tank vent to minimize evaporation losses. The acid/chrome and alkali/cyanide tanks will be provided with "passive" scrubbers on the vent lines from the tanks. No forced ventilation will be provided but the air forced out of the tanks during filling or temperature increases will be scrubbed. Common scrubbers for all acid/chrome tanks and all alkali/cyanide tanks will be used. For oil-containing and ignitable wastes, activated carbon canisters will be used to remove organics from tank vapor releases.

The container storage area will be heated and ventilated in a similar fashion. Air handlers for intake air and steam heating will be provided. Exhaust ventilation also will be provided by exhaust fans. The area will be maintained at 68°F. The normal ventilation rate in this area will be approximately 0.5 CFM per square foot of floor area which is less than in the tank storage and truck pad areas. Except for container unloading operations at each tank line, no source of air contamination will exist to require ventilation rates higher than is required for normal warehouse operations.

At each of the container unloading areas, exhaust fans and slotted, lateral exhaust hoods and auxiliary container vent hoods will be provided. Through use of motorized dampers, these exhaust fans will have the secondary purpose of augmenting the normal

ventilation in a tank containment area should a spill or other upset condition occur. Centrifugal exhaust fans will draw ventilation air through individual scrubbers for the acid/chrome and alkali/cyanide vent lines to prevent discharge of any fumes generated to the atmosphere. Makeup air heaters will provide heated air to the building during these operations to avoid a negative pressure within the building which could inhibit normal exhaust.

During summer months, additional ventilation will be provided to both the tank storage/truck pad areas and the container storage areas in order to provide a cooler, more comfortable work area. Power roof ventilators will be used to achieve approximately 12 air changes per hour. Intake air will be drawn through louvers on the north and south walls of the building.

Overhead doors will be heated with unit heaters to maintain temperature when doors are open. The control room and other ancillary areas will be provided with steam convectors or unit heaters. Wall mounted air conditioning/ventilating units will be provided in these areas.

Power service to the CWS&TF will be 480 volt, 3 phase, 3 wire, 60 hertz, 600 amp and will be supplied from a source inside Building "E" of the existing manufacturing facility. Service will consist of 3-350 MCM cables and one size 1/0, bare copper grounding conductor, in each of two 3" underground conduits. Power service will be protected by a 600 amp circuit breaker.

A Motor Control Center will be provided in the CWS&TF for termination of the above power service and to provide for power

distribution within the CWS&TF. The Motor Control Center will contain circuit breakers, motor magnetic starters, H-O-A selector switches, run indication lights, etc. as required for facility and process power.

All electrical equipment will be housed in Nema Type 12 enclosures except for explosion proof, Class I-Div. I, requiring NEMA Type 7 in the ignitables handling areas up to eight feet above the floor and for NEMA 3R on the roof.

Lighted exit signs will be provided at all doors deemed to be exists.

Battery powered emergency lighting fixtures will be installed in strategic locations inside building to facilitate evacuation from the building in the event of a sustained power outage.

IV. CONTAINER STORAGE

a. Types of Containers

Several types of containers are used for storage of hazardous wastes. All containers are DOT approved and all are compatible with the wastes stored in them. The most commonly used containers are 55-gallon steel drums, 10 and 20 gallon fiber drums, 375 gallon transporters, and commercially available 330, 220 and 180 gallon transporters. Containers are lined or constructed of appropriate materials as necessary for chemical resistance to the wastes stored in them. All drums used for storage of hazardous waste are new or reconditioned in accordance with 49 CFR, Section 173.28.

Fifty-five gallon drums are typically DOT 17C, 17E or 17H or 6D. Fiber drums are typically DOT 21C. Some small 5-15 gallon polyethylene DOT approved carboys are also used at the facility.

The 375 gallon transporters were manufactured by P&W. These containers are constructed of stainless steel or carbon steel lined with 40 mil PVC or Hypalon. These transporters comply with DOT Specification 60 except that the ends of the transporters are bolted rather than welded as prescribed by 49 CFR 178.225-1(a). Because of this, an exemption from DOT hazardous materials regulatory requirements has been obtained. A copy of this exemption and the specifications for these transporters is presented as Exhibit D-2. These containers are being phased out and will be replaced with commercially available, DOT approved, portable tanks of similar sizes.

The commercially available DOT approved transporters will typically be approximately 330 gallon capacity. Some smaller transporters (Approximately 200 and 180 gal) may also be used occasionally. These containers will typically be constructed of polyethylene, polyethylene coated with teflon, or 316 stainless steel. Some of these containers are presently in use at the facility but many will be purchased in the near future. Specifications for the commercially available transporters to be purchased in the near future, as well as for the commercially available transporters currently in use, are provided in Exhibit D-3. Exhibit D-3 also includes a copy of a letter from P&W's current container supplier identifying DOT approved drums currently used for hazardous waste at Pratt & Whitney.

Non-reuseable, fiberboard bulk boxes lined with polyethylene film may be used for bulk solids. These containers have been granted a DOT exemption, a copy of which is presented as Exhibit D-4.

Other sizes of containers are in use and new types of containers are being acquired in several different sizes and materials of construction to improve container management and to facilitate handling. For example, bulk waste from remediation on-site may be placed in 10-30 CY rolloff containers. All such containers will be DOT approved and will be compatible with the wastes placed in them. Table 5 in Section C, Exhibit C-1, provides information on compatibility between wastes and a variety of container/liner materials.

EXHIBIT D-3

Specifications for Commercially
Available Containers

New England Container

August 16, 1991

Mr. Brian Kielbania
United Technologies
Pratt & Whitney Aircraft Group
122-16
400 Main Street
East Hartford, CT 06108

Dear Mr. Kielbania:

In reference to our earlier conversation regarding drums that are supplied to Pratt & Whitney's locations in East Hartford and elsewhere through our Hartford Cooperage Company location.

Most of the drums that are supplied comply with DOT regulations. Drums that are to be used as trash receptacles, etc., are not of the DOT variety and would not be regulated by the Department of Transportation. In the case of reconditioned drums that are recycled per DOT requirements, those drums are so marked. All reconditioned drums are recycled in accordance with 49 CFR, Section 173.28.

We are listing below the DOT drums currently being supplied to you using your stock numbers.

9DRU01522 Reconditioned DOT 17E TH Steel Drums--55-gallon
9DRU01524 Reconditioned DOT 17H OH Steel Drums--55-gallon
9DRU01525 New DOT 17C OH Steel Drums--55-gallon
9DRU01526 New DOT 6-D TH Poly Steel Drums--55-gallon
9DRU01689 New 85-Gallon Steel Salvage Drums--DOT approved
9DRU01986 New Fiber DOT 21C250
9DRU02072 New Fiber DOT 21C 10-Gallon drums

Should you need any additional information on our drums or services, please do not hesitate to call.

Very truly yours,

Tom Lussier

Tom Lussier
Vice President
Sales

/rb

455 George Washington Highway
Smithfield, RI 02917-1915
Phone 401-231-2100
FAX 401-231-7960

Specifications for Commercially Available Transporters Currently in Use

DE WALLACE TECHNICAL SALES, INC.

R.C. DeWallace
President

June 28, 1989

Mr. Larry Lucia
Supervisor, Hazardous Waste Facilities
United Technologies, Inc.
Pratt & Whitney Aircraft Division
400 Main Street
East Hartford, CT 06108

Dear Larry:

We appreciate the opportunity to work with Pratt and Whitney on your special tank requirement. In the areas where you can use a 316 Stainless Steel Tank we offer the following for the Extended Front Discharge Mini Bulk Tank. All wetted steel parts would be 316 Stainless. The Gate Valve would have Teflon Seats, the Drum Opening an EPDM Seal, the Float Indicator would have a Teflon Gasket and the Diaphragm Valve would have your standard Diaphragm. A special Front Bumper is provided to protect the Diaphragm Valve. A reinforced Plate Guard surrounds the lower 10" of the tank.

Enclosed for your review is Metalcraft Drawing #500067 dated 6-22-89. Please note that the tank is heavier gauge than the tanks we supplied earlier for the waste oil handling. It would be a DOT approved construction and tagged to indicate this.

It will be necessary because of the DOT regulations for us to drop test one of your tanks and hold it for one year. The reason we feel this is necessary is the Diaphragm Valve, Guard and Connection is different from our regular tanks. After we have held the tank for one year there would be a charge to repair it for your use.

19 Albany Street, Worcester, MA 01604 • Phone: (508) 752-4500 • FAX: (508) 753-9005

We are pleased to quote the following:

Stainless Steel Tanks - Transtore™

Based on purchasing 20 or more Tanks:

Specifications: 320 Gallon Nominal DOT Stainless Steel Tank.. (305 Gallon with False Bottom). 22.5" Drum Cover Assembly with 10" fill, Float Level Indicator, 2" Gate Valve with 2" Kamlock Adaptor and Dust Cap, 2" Bottom Diaphragm Valve with 2" Elbow, 7 Gauge Plate Guard all around bottom, 3/8" thick Bumper and 5" x 8" Cardholder.

Material: 316 Stainless Steel Wetted Parts.

Dimensions: 42" x 48" x 43.5" High.
Note: Same base dimensions as current Pratt and Whitney Tanks we supplied.

Gauge: 8 Top, 8 Bottom, 8 False Bottom, 8 Sides and 7 Plate Guard.

Reference: 6-22-89 METALCRAFT Drawing #500067 as noted and attached. Final drawing to be issued and approved by Pratt and Whitney engineering prior to construction.

Price Each: $6703.00

FOB: Springfield, MO

Terms: Net 30 Days.

Larry, please let me know if you have any questions. We sincerely hope that Pratt and Whitney choose us to supply these tanks. We appreciate the opportunity to serve your needs.

Best personal regards,

Craig DeWallace

R. Craig DeWallace
President

RCD/cdl

Specifications for Commercially Available Transporters to be Purchased in Near Future

Revision 1
June 13, 1991

Specification for Waste Transporters

The vendor is requested to provide his best price and delivery for the following items.

Item	Description	Qty
1.	Polyethylene Transporters	128
2.	Polyethylene Transporters with Teflon Lining	4
3.	Stainless Steel Transporters	8
4.	Cleaning Heads	15

The detailed specifications for each item is provided below. The vendor shall certify that the transporters meet all requirements specified herein and shall warrant the equipment relative to materials and workmanship for a period of two years from the date of delivery.

1. Polyethylene Transporters

The waste transporters shall be fabricated using rotationally molded, cross linked polyethylene with a fluorination treatment. The bottom of the container shall be sloped such that all liquids are readily discharged without tipping the container or any other outside assistance. The transporter shall comply with DOT Specification E9052 and all US Coast Guard and UN approvals.

a. Capacity: 330 gallons (+/- 10%)

b. The container shall be secured in a steel frame and wire cage. The frame shall include four-way lift truck entry with safety fork pockets for easy transportation. The wire frame shall also enable the containers to be stacked two high when empty with self-aligning stacking legs.

   1. The frame and wire shall be epoxy coated in a yellow color.

   2. The overall dimensions of the frame shall be 40" wide by 48" deep by 63" high (+/- 1" in each direction).

   3. Two large ID plates shall be secured to the wire cage with the following information: Manufacturer, test pressure, tare weight, rated gross weight, capacity, date of manufacture, serial number, and a spot for retest date.

   4. The tank shall sit on a molded polyethylene cushion.

c. All fittings shall be made of high density polypropylene. All caps or otherwise removable parts shall be permanently secured by tether to the tank and/or wire cage.

1. Bottom discharge fitting: 2" diameter with ball valve, quick disconnect coupling, and cap in a recessed sump.

2. Top discharge fitting: 2" diameter with quick disconnect fitting located in the center of the tank.

3. A 7" diameter top lockable fill cap shall be provided including pressure relief device and vacuum relief device in the fill cap.

d. A volume gage (both liters and gallons) shall be included with each tank on opposite corners of the steel frame.

Note: Pratt & Whitney will purchase and install the placard holders, the manifest holding box, and removable panel for stencilling.

2. Polyethylene Transporters with Teflon Lining

The waste transporters shall be fabricated using rotationally molded, cross linked polyethylene with a fluorination treatment and coated with Teflon. The bottom of the container shall be sloped such that all liquids are readily discharged without tipping the container or any other outside assistance. The transporter shall comply with DOT Specification E9658 and all US Coast Guard and UN approvals.

a. Capacity: 330 gallons (+/- 10%)

b. The container shall be secured in a steel frame and wire cage. The frame shall include four-way lift truck entry with safety fork pockets for easy transportation. The wire frame shall also enable the containers to be stacked two high when empty with self-aligning stacking legs.

1. The frame and wire shall be epoxy coated in a yellow color.

2. The overall dimensions of the frame shall be 45" wide by 48" deep by 63" high (+/- 1" in each direction).

3. Two large ID plates shall be secured to the wire cage with the following information: Manufacturer, test pressure, tare weight, rated gross weight, capacity, date of manufacture, serial number, and a spot for retest date.

4. The tank shall sit on a molded polyethylene cushion.

c. All fittings shall be made of high density polypropylene. All caps or otherwise removable parts shall be permanently secured by tether to the tank and/or wire cage.

1. Bottom discharge fitting: 1" diameter with ball valve, quick disconnect coupling, and cap in a recessed sump.

2. Top fittings: Three 2" diameter bung inlets.

3. A 7" diameter top lockable fill cap shall be provided including pressure relief device and vacuum relief device in the fill cap.

d. Liquid level view ports shall be included in the high density polyethylene shell. A volume gage (both liters and gallons) shall be included with each tank on opposite corners of the steel frame.

Note: Pratt & Whitney will purchase and install the placard holders, the manifest holding box, and removable panel for stencilling.

3. <u>316 Stainless Steel Transporters</u>

The waste transporters shall be fabricated using gauge 10, 316 stainless steel. The bottom of the container shall be sloped such that all liquids are readily discharged without tipping the container or any other outside assistance. The transporter shall comply with DOT Specification 56 and 57 and all US Coast Guard and UN approvals.

a. Capacity: 320 gallons (+/- 10%)

b. The container shall include four-way lift truck entry with safety fork pockets for easy transportation. The structure shall also enable the containers to be stacked two high when empty with self-aligning stacking legs.

1. The overall dimensions of the tank shall be 42" wide by 48" deep by 46.5" high (+/- 1" in each direction).

2. Two large ID plates shall be secured to the tank with the following information: Manufacturer, test pressure, tare weight, rated gross weight, capacity, date of manufacture, serial number, and a spot for retest date.

c. All fittings shall be made of 316 stainless steel. All caps or otherwise removable parts shall be permanently secured by tether to the tank and/or frame.

1. Bottom discharge fitting: 2" diameter with gate valve with 2" Kamlock adapter and dust cover in a recessed sump.

2. Top inlet: 10" diameter quick fill with float level indicator.

3. A pressure relief device and vacuum relief device shall be included in the fill cap.

d. A 5" x 8" x 1" deep manifest holding box, fusable vent, 2 placards, and 4 lifting lugs shall be provided.

4. Spray Heads

The spray heads are intended for cleaning the various transporters and shall be fabricated from 316 stainless steel. Each head shall include a spray nozzle and shaft mounting arrangement in a separate 7" diameter fill cap which shall mate with the 7" top opening on the rotationally molded polyethylene tanks.

FLUOROPURE® 220 AND 330 GALLON MINIBULK SHIPPERS

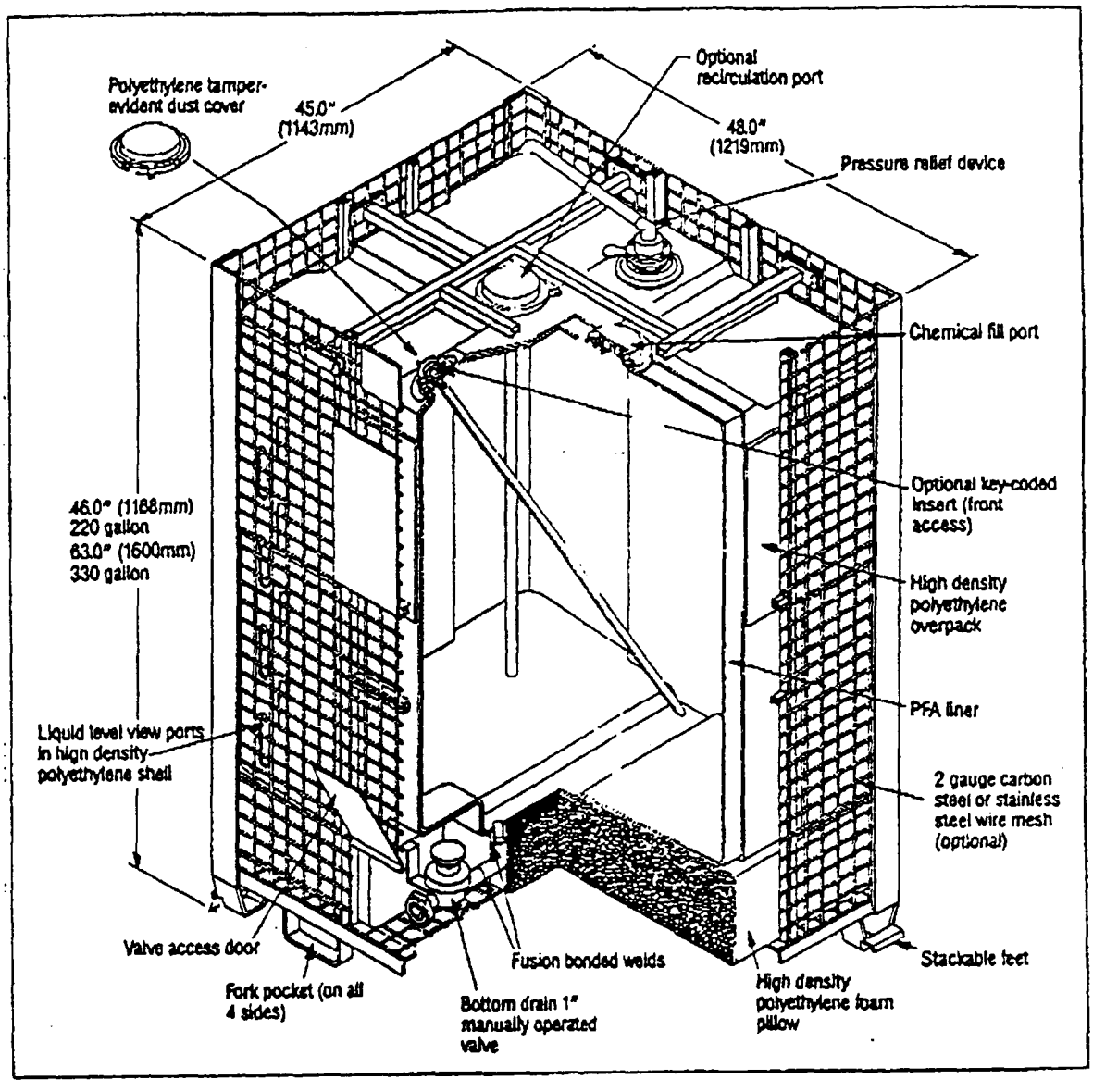

Represented by:
DeWallace Technical Sales, Inc. 19 Albany Street, Worcester, MA 01604
Phone: (508) 752-4500 • FAX: (508) 753-9005
Chemical Handling Specialists • Laboratory Testing • Equipment and Engineering

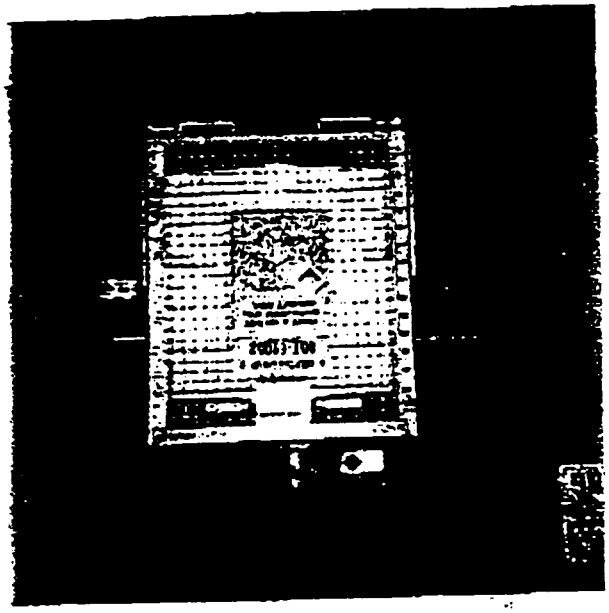

1719
1719

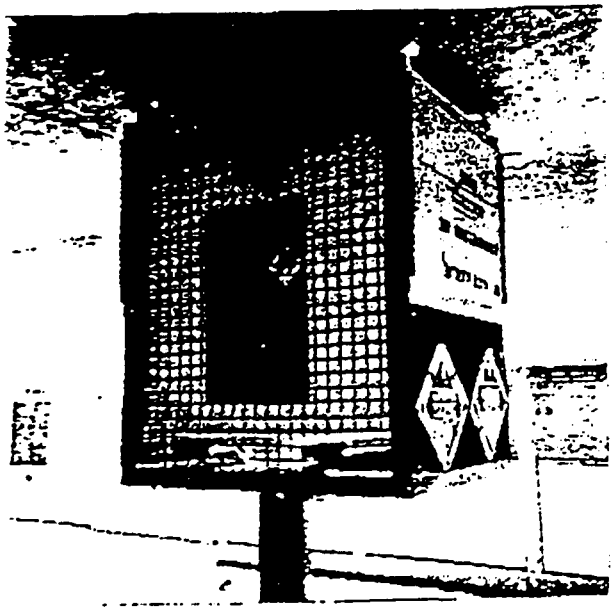

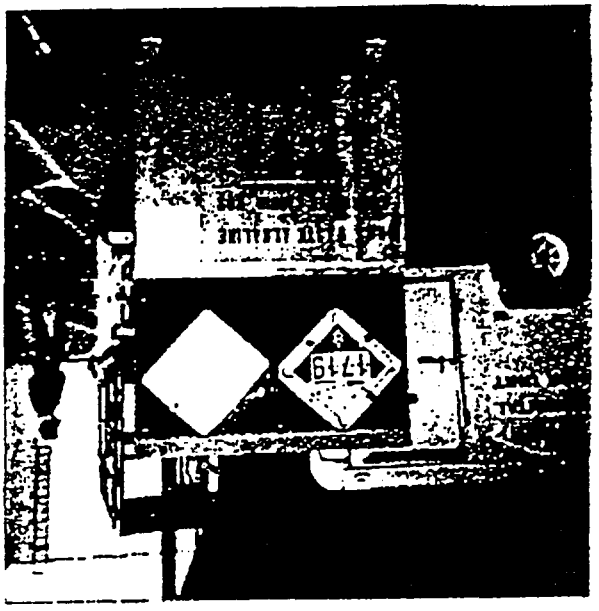
1719

Introducing TUFF TANK. The safest, easiest, most cost effective way to handle hazardous liquids.

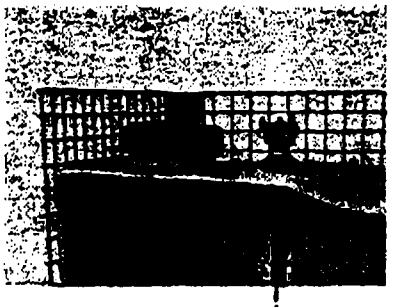

The top discharge option includes a 1-inch quick disconnect fitting and cap, suction line and foot valve/ strainer in a recessed sump.

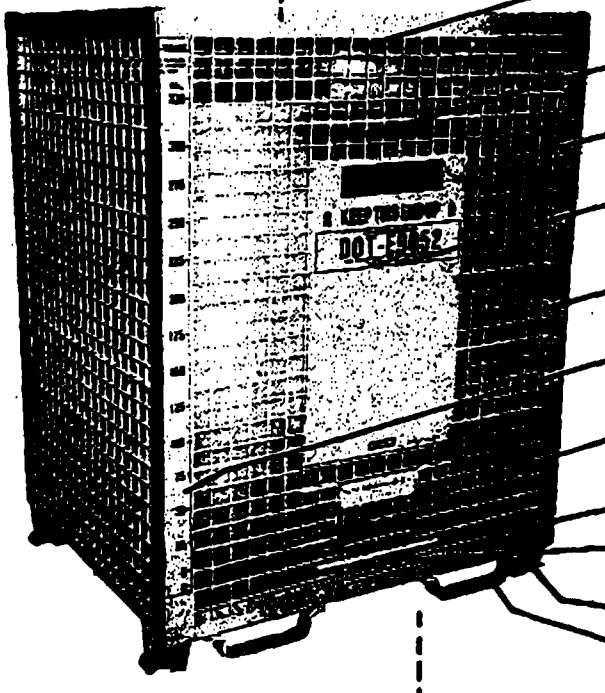

- Large lockable fill cap with heavy-duty buttress-type threads.
- Rugged translucent polyethylene inner tank.
- Rigid heavy-duty wire mesh enclosure.
- Large panel (2 sides) for DOT, EPA safety labels.
- Liquid level constantly visible.
- Volume gauge (Gallons & Liters).
- Sloped bottom to recessed sump for complete emptying.
- Tapered polyethylene cushion.
- Rugged hinged door protects bottom valve assembly and is lockable.
- Self-aligning stacking legs.
- Four-way lift truck entry with safety fork pockets.

The bottom discharge option includes a 2-inch ball valve, quick disconnect coupling and cap, in a recessed sump.

U.S. Patent Pending

TUFF TANK SPECIFICATIONS

	180 Gallons	220 Gallons	275 Gallons	330 Gallons	550 Gallons
	(681 liters)	(833 liters)	(1040 liters)	(1249 liters)	2082
DOT Auth.:	E-9052	E-9052	E-9052	E-9052	
Dimensions:	40" × 48" × 43"H	40" × 48" × 49"H	40" × 48" × 57"H	40" × 48" × 63"H	40" × 48" × 92"H
Tare Wgt.:	379 lbs.*	410 lbs.*	457 lbs.*	488 lbs.*	399 lbs.*
Auth. Gross Wgt.:	3100 lbs.	3790 lbs.	4200 lbs.	5600 lbs.	3500 lbs.
Max. Liq. Density: (When filled)	15.3 lbs./gal	15.3 lbs./gal.	15.3 lbs./gal.	15.3 lbs./gal.	15.3 lbs./gal.

*Tare weight is for a standard Tuff-Tank with bottom discharge. Tare weight may vary ± 3% due to acceptable steel tolerance. A top discharge adds an additional 3 lbs.

Effective January 1, 1990

Now you can see the remarkable TUFF TANK System in action. We'll send you a VHS copy of our video presentation demonstrating the unique features and benefits of TUFF TANK.
For more information write or call:

DeWALLACE TECHNICAL SALES, INC.
19 Albany Street
WORCESTER, MA 01604
(508) 752-4500 FAX (508) 753-9005

Represented by:
DEWALLACE TECHNICAL SALES, INC. 19 Albany Street, Worcester, MA 01604
Phone: (508) 752-4500 • FAX: (508) 753-9005
Chemical Handling Specialists • Laboratory Testing • Equipment and Engineering

DeWALLACE TECHNICAL SALES, INC.

To: Mr. Brian Kielbania
Senior Facilities Engineer
P&W Mail Stop 122-16

From: RCD

Reference: **Mini-Bulk Shippers**
Various Pratt & Whitney Locations

Date: 08-28-91

Brian, here is the information you requested. The Tuff-Tanks™ are a molded cross linked polyethylene container with a fluorination treatment. These are manufactured under DOT-E-9052 (11th revision) dated March 29,1991. A copy of the letter from the Department of Transportation is included for your files. We provide updated letters as appropriate when they expire (February 28, 1993).

The metal tanks are 316 Stainless Steel for wetted parts. They are produced to DOT 57 Specifications.

All tanks have Serial Numbers, Date of Manufacture and the DOT specification or exemption number along with other information attached to the tank.

Call if you have any questions.

Regards,

Craig DeWallace

RCD/kdm
via FAX & Mail

Enclosure: Current DOT Letter

• 19 Albany Street, Worcester, MA 01604 •
• Phone: (508) 752-4500 • FAX: (508) 753-9005 •

U.S. Department of Transportation
Research and Special Programs Administration

400 Seventh Street, S.W.
Washington, D.C. 20590

MAR 29 1991

DOT-E 9052
(ELEVENTH REVISION)

1. Chemical Handling Equipment Co., Inc., Detroit, Michigan, is hereby granted an exemption from certain provisions of this Department's Hazardous Materials Regulations to manufacture, mark, and sell the packaging described in paragraph 7 below for use in the transportation in commerce of the corrosive liquids, flammable liquids, combustible liquids or an oxidizer described in paragraph 3 below subject to the requirements specified herein. This exemption authorizes the use of a non-DOT specification rotationally molded, cross-linked or linear polyethylene portable tank enclosed in a steel cage or hardwood overpack for the shipment of corrosive liquids, flammable liquids, combustible liquids or an oxidizer, and provides no relief from any regulation other than as specifically stated.

2. BASIS. This exemption is based on Chemical Handling Equipment Co., Inc.'s application dated January 24, 1991, submitted in accordance with 49 CFR 107.105 and the public proceeding thereon, and supplemental emergency application dated March 21, 1991, submitted in accordance with 49 CFR 107.113, and a determination that it is necessary to preclude serious economic loss.

3. HAZARDOUS MATERIALS (Descriptor and class).

a. Corrosive liquids for which a DOT-34 reusable polyethylene container is prescribed in 49 CFR Part 173, and which have no secondary hazards and a vapor pressure of no greater than 14.7 psia at 130°F., classed as corrosive material.

b. Hydrogen peroxide solution in water containing 52 percent or less hydrogen peroxide by weight, classed as an oxidizer.

c. Methyl alcohol, ethyl alcohol, and solutions thereof, classed as flammable liquids; other flammable liquids compatible with polyethylene which have no secondary hazards and have a flash point of 73°F. or higher; combustible liquids and other flammable liquids which have been specifically identified to, and acknowledged in writing by the Office of Hazardous Materials Exemptions and Approvals (OHMEA) prior to the first shipment. Materials meeting the flammable liquid hazard class and having a flash point below 73°F may not be transported by cargo vessel.

4. PROPER SHIPPING NAME (49 CFR 172.101). Specific chemical name or generic description, as appropriate.

5. REGULATION AFFECTED. 49 CFR Part 173, Subpart F, 173.118a, 173.119, 173.125, 176.340, 178.19, 178.253.

6. MODES OF TRANSPORTATION AUTHORIZED. Motor vehicle, rail freight and cargo vessel.

7. SAFETY CONTROL MEASURES.

a. Packaging prescribed is a non-DOT specification rotationally-molded polyethylene portable tank having a nominal capacity not to exceed 330 gallons, as shown in Chemical Handling Equipment Co. Inc., drawings M-1035, M-1041, or M-1042 on file with the OHMEA. These tanks may be enclosed as follows:

(1) A polyethylene portable tank, not to exceed 330 gallons capacity, in a wire frame or steel outer enclosure as shown on Bathey Manufacturing drawing no. 8094 or Chemical Handling Equipment Co., Inc. Drawing M-1036. Bottom outlets are authorized.

(2) A polyethylene portable tank, not to exceed 225 gallons capacity, without bottom outlets, in a steel outer structure as described in the petitioner's request dated October 13, 1983.

(3) A polyethylene portable tank, not to exceed 225 gallons capacity, without bottom outlets, in a wirebound hardwood overpack as shown on General Box Company drawing 6995 and described in petitioner's application dated March 30, 1984, and additional letter of May 31, 1984.

(4) A polyethylene portable tank, not to exceed 225 gallons capacity, in a wirebound hardwood overpack as shown on Chemical Handling Equipment Co., Inc. drawing S-330, dated August 29, 1986. Bottom outlets are authorized.

(5) A polyethylene portable tank, not to exceed 275 gallons capacity, in a steel-reinforced high density polyethylene overpack, as shown on Chemical Handling Equipment Company, Inc. Drawing M-1037, dated January 6, 1988. Bottom outlets are authorized. Polyethylene overpack must be made from high density linear polyethylene which has been specifically identified to and acknowledged by the OHMEA prior to first shipment.

MAR 29 1991

b. Each portable tank must be made from high density cross-linkable or medium or low density linear polyethylene which has been specifically identified to and acknowledged in writing by the OHMEA prior to first manufacture. In addition, the tank must be in compliance with the provisions of 49 CFR 178.19, except as follows:

i. 178.19-3 - Does not apply.

ii. 178.19-4 - Does not apply.

iii. 178.19-6(a) - Does not apply. Instead, each portable tank must be permanently marked by embossment or with a metal certification plate permanently affixed to each tank. Where the tank is marked by embossment on the polyethylene unit, the serial number and date of manufacture may be etched or stamped into the polyethylene. Where stamping or etching is used, it must not reduce the marked area thickness below the minimum thickness prescribed herein. The markings must be in letters and numbers at least 1/4-inch high located on the side of the tank. The markings shall be understood to certify that the portable tank complies with all requirements of this exemption and must contain at least the following information:

DOT-E 9052 portable tank
Tank manufacturer_____
Test pressure 15 psig._____
Serial number_____
Date of manufacture (month and year)
Tare weight_____lbs.
Rated gross weight_____lbs.
Capacity_____U.S. gal.

iv. 178.19-7(a)(3) - Changed to read: Each portable tank shall be tested by retaining for 5 minutes, hydrostatic pressure of at least 15 psig at equilibrium without leakage or pressure drop.

v. 178.10-7(c)(2) - Does not apply.

c. Each tank must be fitted with a pressure relief device that will limit the pressure in the tanks to 15 psig and is in accordance with 49 CFR 178.253-4 except as follows:

i. 178.253-4(a)

- Frangible devices are not authorized.

MAR 29 1991

ii. 178.253-4(c)(1)

- The pressure relief device must open not less than 10 psig and not over 15 psig.

- The minimum venting capacity for pressure activated vents must be 6,000 SCFH at not more than 15 pounds per square inch gauge.

iii. 178.253-4(c)(3)

- A fusible device that will function at a temperature no greater than 250°F may be used provided the vapor pressure in the tank at 250°F does not exceed 15 psig.

d. Portable tanks must be capable of satisfactorily withstanding the drop test and hydrostatic pressure tests prescribed in 49 CFR 178.19-7(a) and the vibration test prescribed in 49 CFR 178.253-5(a)(1).

e. Except for portable tanks described in paragraph 7.a.(4) above, the minimum thickness of any polyethylene tank measured at any point on the container is 0.185 inch, except that such a tank may have a total accumulated surface area of no more than 50 square inches having a minimum thickness of no less than 0.140 inches. For tanks described in paragraph 7.a.(4) above, the minimum thickness measured at any point on the container is 0.150 inch. Other details of the shipping container must be as depicted on Chemical Handling Equipment Co., Inc.'s drawings M-1035, M-1036, M-1037, M-1041, M-1042 and S-330 and Bathey drawing entitles "Ship Print" dated May 2, 1989 included in the petitioner's application.

f. Additionally, each portable tank must possess the chemical and physical properties as reported to the OHMEA by the petitioner's letter dated May 10, 1983.

g. Any changes in design, resin, or process methods must be approved, in writing, by the OHMEA. Prototype test results for the tests required in paragraph 7.d. of this exemption must accompany any request for changes in design, resin, or process methods.

h. Reuse of any portable tank must be in accordance with the applicable requirements of 49 CFR 173.28 and 173.32(f) as modified herein. Each portable tank must be hydrostatically retested in accordance with 49 CFR 173.32(f) as applicable to DOT Specification 57 tanks, at test pressure of 15 psig for 5 minutes without a drop in pressure or leakage. Any tank that fails must be rejected and may not be used again for the transportation of hazardous materials. The date of the most recent periodic retest must be marked on the tank near the tank identification markings required in paragraph 7, a, ii. of this exemption. The owner of the tank or his authorized agent must retain a written record indicating the date and results of all required tests and the name and address of the tester, until the next retest has been satisfactorily completed and recorded.

i. Portable tanks with repaired bodies are not authorized.

j. Commodities must be compatible with the polyethylene (PE) portable tank, and may not permeate the PE to an extent that a hazardous condition could be caused during transportation and handling.

k. Portable tanks for hydrogen peroxide must have a vented closure to prevent accumulation of internal pressure.

l. Any fitting must be protected in accordance with 49 CFR 178.253-3.

m. The sides of each portable tank must be marked "KEEP THIS END UP" in two places, 180° apart, with an arrow pointing to the tank top.

n. Tanks must always be filled and shipped in the outer steel cage, hardwood overpack or steel-reinforced polyethylene enclosure as shown in the petitioner's application.

8. <u>SPECIAL PROVISIONS</u>.

a. Offerors for transportation of hazardous materials specified in this exemption may use the packaging described in this exemption for the transportation of such hazardous materials so long as no modifications or changes are made to the packages, all terms of this exemption are complied with, and a copy of the current exemption is maintained at each facility from which such offering occurs.

811.80

b. Each portable tank must be plainly marked on both sides near the middle, in letters at least two inches high on a contrasting background, "DOT-E 9052."

c. Shipments by rail must be in compliance with the requirements of 49 CFR 174.63(a) and (c).

d. A copy of this exemption must be carried aboard each vessel used to transport packages covered by this exemption.

e. A copy of the exemption, in its current status, must be maintained at each manufacturing facility at which this packaging is manufactured and must be available to a DOT representative upon request.

f. Each packaging manufactured under the authority of this exemption must be either (1) marked with the name of the manufacturer and location (city and state) of the facility at which it is manufactured or (2) marked with a registration symbol designated for a specific manufacturing facility.

g. Shippers using the packaging covered by this exemption must comply with the shipping paper, marking, labeling, and placarding requirements of 49 CFR Part 172; all provisions of this exemption, and all other applicable requirements contained in 49 CFR Parts 100-180.

9. REPORTING REQUIREMENTS: Any incident involving loss of packaging contents or packaging failure must be reported to the Associate Administrator for Hazardous Materials Safety as soon as practicable.

10. EXPIRATION DATE. February 28, 1993.

Issued at Washington, D.C.

MAR 29 1991

Alan I. Roberts
Associate Administrator
for Hazardous Materials Safety

(DATE)

Address all inquiries to: Associate Administrator for Hazardous Materials Safety, Research and Special Programs Administration, U.S. Department of Transportation, Washington, D.C. 20590. Attention: Exemptions Branch.

Dist: FHWA, FRA, USCG.

U.S. Department
of Transportation

Research and
Special Programs
Administration

400 Seventh St., S.W.
Washington, D.C. 20590

SEP 4 1985

Mr. Gordon Rousseau
Senior Technical Advisor
Lawrence W. Bierlein, P.C.
Law Offices
P.O. Box 25576
1228 Thirty-First Street, NW
Washington, D.C. 20007

Dear Mr. Rousseau:

In reference to your letter dated August 7, 1985, this is to advise that isopropyl alcohol, classed as flammable liquid, is acceptable for shipment by motor vehicle and rail freight only, under the terms of DOT Exemption 9052.

Sincerely,

J. R. Grothe
Chief, Exemptions Branch
Office of Hazardous Materials
Regulation
Materials Transportation Bureau

V. TANK STORAGE

a. General Description and List of Tanks

Liquid wastes will be received from on-site and off-site facilities in various quantities and in various containers including drums, transporters, and tanker trucks. After appropriate classification utilizing the IWTS and the CWS&TF computer system (described subsequently herein) the wastes will be pumped to one of sixteen 6,000 gallon storage tanks. The waste will then either be pumped to the existing NPDES permitted CWTP, or upon accumulation of an economic quantity for disposal, to a tanker truck for disposal by a licensed hazardous waste vendor. Figure D-3 (2 sheets) presents process schematics for each of the sixteen tank systems. The vertical, enclosed, cylindrical storage tanks will have dished bottoms and domed tops and will be supported on legs. There will be two withdrawal connections, one at the lowest point of the dished bottom and one near the bottom of the straight side wall. The domed top will have a manway for access; a flanged pipe for connection to the normal and emergency vent systems; and other flanged pipes for filling and instrumentation connections. Typical tank dimensions are presented on Figure D-4.

A written assessment attesting, that the tank systems have sufficient structural integrity and are acceptable for storing and treating hazardous waste is presented as Exhibit D-5.

Each tank will be located within its own containment with a volume greater than the nominal tank volume of 6,000 gallons (See Figure D-2). The operating valves, transfer pumps and other single walled equipment will be located within the containment.

FIGURE D-3

Process Piping Schematics
CWS&TF

US EPA New England
RCRA Document Management System
Image Target Sheet

RDMS Document ID # 2411

Facility Name: PRATT & WHITNEY - MAIN STREET

Facility ID#: CTD990672081

Phase Classification: R-1B

Purpose of Target Sheet:

[X] Oversized (in Site File) [ ] Oversized (in Map Drawer)

[ ] Page(s) Missing (Please Specify Below)

[ ] Privileged [ ] Other (Provide Purpose Below)

Description of Oversized Material, if applicable:

FIGURE D-3, SHEET 1 OF 2: PROCESS PIPING SCHEMATIC TANKS 1 TO 16

[X] Map [ ] Photograph [ ] Other (Specify Below)

* Please Contact the EPA New England RCRA Records Center to View This Document *

US EPA New England
RCRA Document Management System
Image Target Sheet

RDMS Document ID # 2411

Facility Name: PRATT & WHITNEY - MAIN STREET

Facility ID#: CTD990672081

Phase Classification: R-1B

Purpose of Target Sheet:

[X] Oversized (in Site File) [ ] Oversized (in Map Drawer)

[ ] Page(s) Missing (Please Specify Below)

[ ] Privileged [ ] Other (Provide Purpose Below)

Description of Oversized Material, if applicable:

FIGURE D-3, SHEET 2 OF 2: PROCESS PIPING SCHEMATIC CWTP & DETAILS

[X] Map [ ] Photograph [ ] Other (Specify Below)

* Please Contact the EPA New England RCRA Records Center to View This Document *

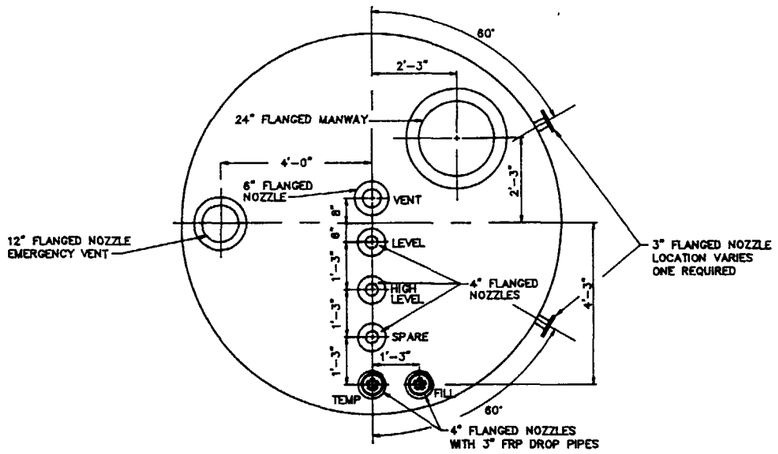

PLAN

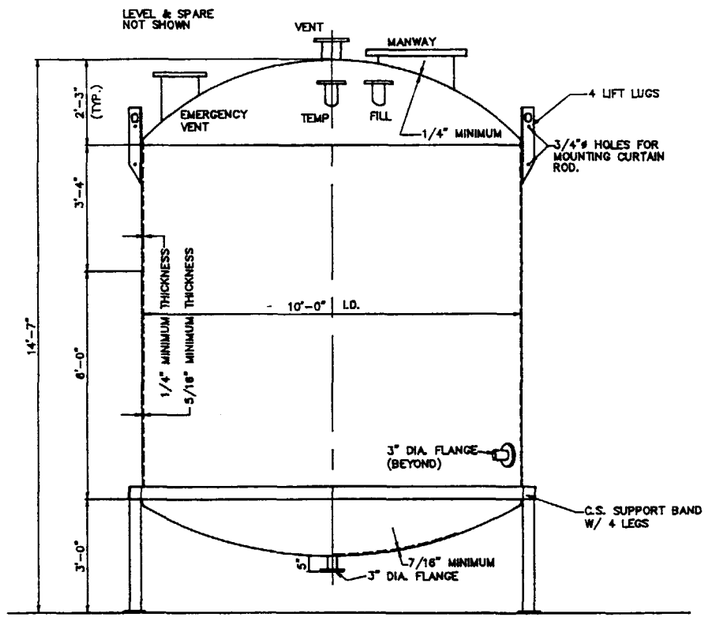

SIDE VIEW

F.R.P. STORAGE TANK

SCALE: 1" = 4'-0"

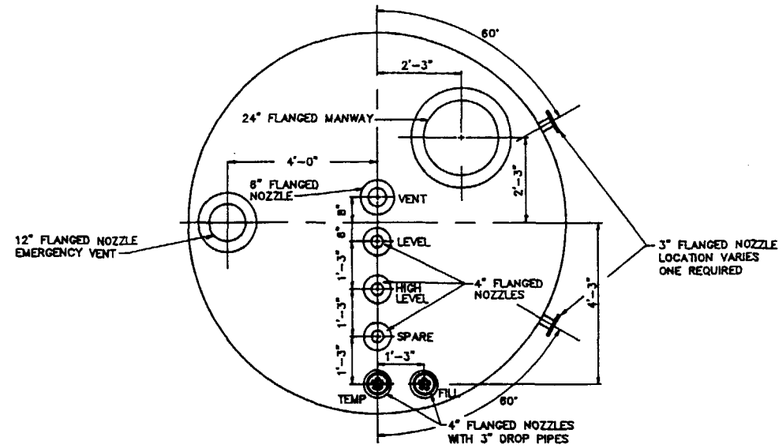

PLAN

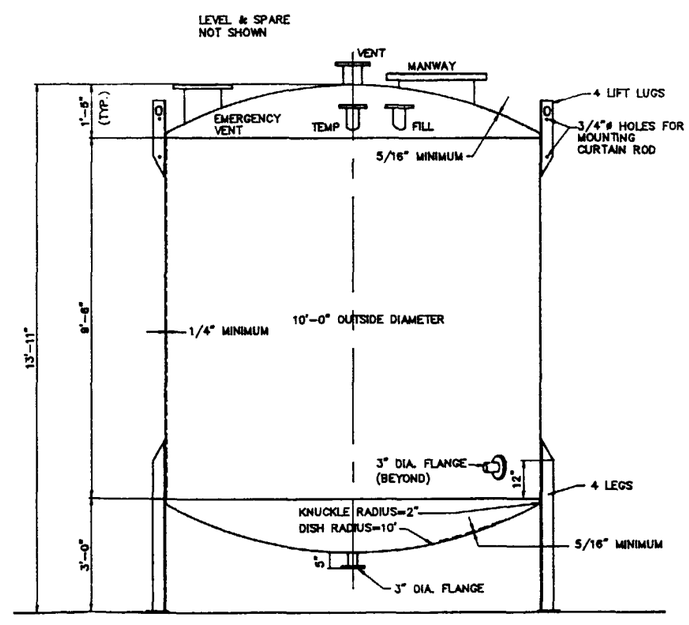

SIDE VIEW

STEEL STORAGE TANK

SCALE: 1" = 4'-0"

LOUREIRO ENGINEERING ASSOCIATES, P.C.
CONSULTING ENGINEERS
PLAINVILLE, CT

COMM.NO. 971-25

FIGURE D-4
RCRA PART B PERMIT APPLICATION
TYPICAL TANK DIMENSIONS

CKD. BY	APP. BY	SCALE	DATE
J.J.L.,G.H.J.	J.L.	NONE	9/5/91

971250-IR (6)

TABLE D-2
CWS&TF TANK DESIGNATIONS

Tank No.	Contents	Initially Assigned RGN's
1	Acids/Oxidizer	2,107
2	Hydrofluoric Acid	1,2,15
3	Acids/Mineral	1,2,24
4	Organic Acids, Fixers	1,3,16,24
5	Chromium Solutions	2,24,104
6	Alkali Treatable	4,10,24,28,31,101,106
7	Alkali DWW	10,24,104,106
8	Alkali Ammonia	10,24,104,106
9	Cyanides	10,11,24,106
10	Zyglo & Compatibles	4,13,16,17,19,24,101
11	Water/Solvent	4,5,16,7,24,29,31,101,106
12	High Flash/Soluble Oils	16,17,24,101,106
13	High Flash/Treated Soluble Oil	16,17,24,101,106
14	B1 Oil Tank	7,13,29,32,101,103
15	B2 & B3 Oil/Solvents	4,14,16,17,19,28,29,101
16	PCB Oils	17,101

b. Materials of Construction

The tank materials in each group would be compatible with all of the solutions to be stored in that group. This would provide back-up capacity in the event of the need to isolate the solution in a particular tank or because of temporary increases in quantities of certain types of wastes. Therefore the material selection reflects the most stringent requirements for solutions in each of the groups. Chemical resistance data for each of the selected materials is presented as Exhibit D-6. Construction of the tank systems is in progress at this time and consequently, the tank material selections have not been finalized. However, it is anticipated that the only changes would be the selection of materials which could provide equal or even greater chemical resistance than those noted herein.

Tank No.	Waste Type	Tank Construction
1,2,3,4,5	Acid/Chrome	Mild Steel Interior Lined with Kynar Exterior steel coated with epoxy based paint.
6,7,8,9	Alkali/Cyanide	Fiberglass reinforced plastic with 100-mil Derakane 470 inner corrosion barrier
10,11,12,13	Oil/Water	Mild steel, interior coated with 35-45 mil vinyl ester coating Exterior steel coated with epoxy based paint.
14,15,16	Ignitables/PCB	Mild steel, interior coated with 35-45 mil vinyl ester coating Exterior steel coated with epoxy based paint.

EXHIBIT D-6

Chemical Resistance Data
for
Tank and Pipe Materials/Linings

KYNAR FOR TANKS 1-5

FOR TANKS 1-5

Chemical Substance	Concentration[a]	Maximum[b] Temperature °F	°C
Acetaldehyde		NR[c]	
Acetamide		75	25
Acetic Acid		120	50
Acetic Acid	10% in water	225	110
Acetic Acid	50% in water	200	95
Acetic Acid	80% in water	175	80
Acetic Anhydride		NR	
Acetone		NR	
Acetone	10% in water	125	50
Acetonitrile		125	50
Acetophenone		NR	
Acetyl Bromide		125	50
Acetyl Chloride		125	50
Acetylacetone		NR	
Acetylene		250	120
Acrylonitrile		75	25
Adipic Acid		150	65
Air		275	135
Alcoholic Spirits	40% Ethyl Alcohol	200	95
Allyl Alcohol		125	50
Allyl Chloride		212	100
Aluminum Acetate	Aqueous solution or solid	275	135
Aluminum Bromide		275	135
Aluminum Chloride	Up to 40% in water	275	135
Aluminum Fluoride	Aqueous solution or solid	275	135
Aluminum Hydroxide		275	135
Aluminum Nitrate	Aqueous solution or solid	275	135
Aluminum Oxychloride		275	135
Aluminum Sulfate	Aqueous solution or solid	275	135
Ammonia, gas		NR	
Ammonia, Liquid		NR	
Ammonium Acetate	Aqueous solution or solid	175	80
Ammonium Alum	Aqueous solution or solid	275	135
Ammonium Bifluoride	Aqueous solution or solid	150	65
Ammonium Bromide	Aqueous solution or solid	250	120
Ammonium Carbonate	Aqueous solution or solid	275	135
Ammonium Chloride	Aqueous solution or solid	275	135
Ammonium Dichromate	Aqueous solution or solid	250	120
Ammonium Fluoride	Aqueous solution or solid	275	135
Ammonium Hydroxide	Up to "concentrated"	225	110
Ammonium Metaphosphate	Aqueous solution or solid	275	135
Ammonium Nitrate	Aqueous solution or solid	275	135
Ammonium Persulfate	Aqueous solution or solid	75	25
Ammonium Phosphate	Aqueous solution or solid	275	135
Ammonium Sulfate	Aqueous solution or solid	275	135
Ammonium Sulfide	Aqueous solution or solid	125	50
Ammonium Thiocyanate	Aqueous solution or solid	275	135
Amyl Acetate		125	50
Amyl Alcohol		275	135
Sec-Amyl Alcohol		125	50
Amyl Chloride		275	135
Aniline		120	50
Aniline Hydrochloride	Aqueous solution or solid	75	25
Aqua Regia		75	25
Arsenic Acid	Aqueous solution	275	135
Asphalt		250	120
Barium Carbonate		275	135
Barium Chloride	Aqueous solution or solid	275	135
Barium Hydroxide		275	135
Barium Nitrate	Aqueous solution or solid	275	135
Barium Sulfate		275	135

Maximum usage temperatures for KYNAR resin with selected chemicals.

Counsult your KYNAR products representative if you have any questions or for more recent results.

[a] pure substance unless otherwise indicated.

[b] temperatures in °F have been rounded to °C in 5 degree increments.

[c] NR indicates that KYNAR resin is not recommended for use with the chemical at room temperature or at the temperature indicated.

Chemical Substance	Concentration[a]	Maximum[b] Temperature °F	°C
Barium Sulfide		275	135
Beer		200	95
Beet Sugar Liquors		225	110
Benzaldehyde		70	20
Benzene		170	75
Benzenesulfonic Acid	Aqueous solution or solid	125	50
Benzoic Acid		225	110
Benzoyl Chloride		170	75
Benzoyl Peroxide		170	75
Benzyl Alcohol		250	120
Benzyl Chloride		275	135
Benzyl Ether		100	40
Benzylamine	Aqueous solution or liquid	75	25
Black Liquor		175	80
Bleaching Agents		275	135
Borax		275	135
Boric Acid		275	135
Boron Trifluoride		75	25
Brine		275	135
Brine, acid		275	135
Brine, basic		275	135
Brine, chlorinated acid		200	95
Bromic Acid	Aqueous solution	200	95
Bromine, dry gas		150	65
Bromine, liquid		150	65
Bromine Water		212	100
Bromobenzene		150	65
Bromoform		150	65
m-Bromotoluene		175	80
Butadiene		250	120
Butane		250	120
Butanediol	Aqueous solution or liquid	275	135
Butyl Acetate		80	25
Butyl Alcohol	Aqueous solution or liquid	225	110
sec-Butyl Alcohol	Aqueous solution or liquid	200	95
t-Butyl Alcohol	Aqueous solution or liquid	200	95
Butyl Acrylate		125	50
Butyl Bromide		275	135
Butyl Chloride		275	135
Butyl Ether		100	40
Butyl Mercaptan		275	135
Butyl Stearate		100	40
Butylamine	Aqueous solution or liquid	NR	
sec-Butylamine	Aqueous solution or liquid	70	20
t-Butylamine	Aqueous solution or liquid	70	20
1-Butylene		275	135
Butylphenol		225	110
Butyraldehyde		150	65
Butyric Acid		225	110
Calcium Acetate	Aqueous solution or solid	275	135
Calcium Bisulfate	Aqueous solution or solid	275	135
Calcium Bisulfite	Aqueous solution or solid	275	135
Calcium Bromide	Aqueous solution or solid	275	135
Calcium Carbonate		275	135
Calcium Chlorate	Aqueous solution or solid	275	135
Calcium Chloride	Aqueous solution or solid	275	135
Calcium Hydroxide		275	135
Calcium Hypochlorite	Aqueous solution or solid	200	95
Calcium Nitrate	Aqueous solution or solid	275	135
Calcium Oxide		250	120
Calcium Phosphate		275	135

KYNAR®

Chemical Substance	Concentration[a]	Maximum[b] Temperature °F	°C
Calcium Sulfate		275	135
Cane Sugar Liquors		275	135
Caprylic Acid		175	80
Carbon Dioxide		275	135
Carbon Disulfide		75	25
Carbon Monoxide		275	135
Carbon Tetrachloride		275	135
Carbonic Acid		275	135
Casein		250	120
Castor Oil		275	135
Chloral Hydrate		75	25
Chlorinated Phenol		150	65
Chlorine	5% in CCl_4	200	95
Chlorine, gas		200	95
Chlorine, liquid		200	95
Chlorine Dioxide		150	65
Chlorine Water		225	110
Chloroacetic Acid	Aqueous solution or pure	NR	
Chloroacetyl Chloride		125	50
Chlorobenzene		170	75
Chlorobenzenesulfonic Acid	Aqueous solution or pure	200	95
Chlorobenzyl Chloride		125	50
Chlorofluorocarbon 11		200	95
Chlorofluorocarbon 12		200	95
Chlorofluorocarbon 13		200	95
Chlorofluorocarbon 14		200	95
Chlorofluorocarbon 21		200	95
Chlorofluorocarbon 22		200	95
Chlorofluorocarbon 113		200	95
Chlorofluorocarbon 114		200	95
Chloroform		125	50
6-Chlorohexanol		170	75
Chlorohydrin		125	50
Chloropicrin		150	65
Chlorosulfonic Acid		NR	
Chlorotrimethylsilane		125	50
Chrome Alum	Aqueous solution or solid	200	95
Chromic Acid	Up to 40% in water	175	80
Chromic Acid	50% in water	125	50
Chromyl Chloride		125	50
Cider		140	60
Citric Acid	Aqueous solution or solid	275	135
Coal Gas		225	110
Coconut Oil		275	135
Copper Acetate	Aqueous solution or solid	250	120
Copper Carbonate, basic		275	135
Copper Chloride	Aqueous solution or solid	275	135
Copper Cyanide		275	135
Copper Fluoride		275	135
Copper Nitrate	Aqueous solution or solid	275	135
Copper Sulfate	Aqueous solution or solid	275	135
Corn Oil		275	135
Corn Syrup		250	120
Cottonseed Oil		275	135
Cresol		150	65
Cresylic Acid		150	65
Crotonaldehyde		125	50
Crude Oil		275	135
Cryolite		250	120
Cuprous Chloride		250	120
Cyclohexane		275	135

Maximum usage temperatures for KYNAR resin with selected chemicals.

Counsult your KYNAR products representative if you have any questions or for more recent results.

[a] pure substance unless otherwise indicated.

[b] temperatures in °F have been rounded to °C in 5 degree increments.

[c] NR indicates that KYNAR resin is not recommended for use with the chemical at room temperature or at the temperature indicated.

Chemical Substance	Concentration[a]	Maximum[b] Temperature °F	°C
Cychohexanol		150	65
Cyclohexanone		75	25
Cyclohexyl Acetate		200	95
Decane		250	120
Dextrin	Aqueous solution or solid	250	120
Diacetone Alcohol		75	25
p-Dibromobenzene		200	95
1,2,-Dibromopropane		200	95
Dibutyl Phthalate		NR	
Dibutyl Sebacate		NR	
Dibutylamine	Aqueous solution or liquid	70	20
Dichloroacetic Acid	Aqueous solution or liquid	125	50
o-Dichlorobenzene		150	65
Dichlorodimethylsilane		125	50
Dichloroethylene		225	110
2,2-Dichloropropionic Acid		125	50
αα-Dichlorotoluene		150	65
Diesel Fuels		275	135
Diethanolamine	Aqueous solution or liquid	NR	
Diethylamine	Aqueous solution or liquid	75	25
Diethyl Malonate		NR	
Diethylenetriamine	Aqueous solution or liquid	125	50
Diglycolic Acid		75	25
Diisobutyl Ketone		200	95
Diisobutylene		275	135
Diisopropyl Ketone		70	20
Dimethyl Acetamide		NR	
Dimethyl Formamide		NR	
Dimethyl Phthalate		75	25
Dimethyl Sulfate		75	25
Dimethyl Sulfoxide		NR	
Dimethylamine	Aqueous solution or gas	75	25
Dimethylaniline		75	25
2,6,—Dimethyl-4-heptanol		200	95
2.5-Dimethyl-1,5-hexadiene		250	120
Dioctyl Phthalate		75	25
1,4,-Dioxane		NR	
Dioxolane		NR	
Dipropylene Glycol Methyl Ether		75	25
Disodium Phosphate	Aqueous solution or solid	200	95
Divinyl Benzene		125	50
Epichlorohydrin		NR	
Epsom Salts	Aqueous solution or solid	175	80
Ethanethiol		75	25
Ehanolamine	Aqueous solution or liquid	NR	
2-Ethoxyethyl Acetate	Aqueous solution or liquid	200	95
Ethyl Acetate		NR	
Ethyl Acetoacetate		75	25
Ethyl Acrylate		75	25
Ethyl Alcohol	Aqueous solution or liquid	275	135
Ethyl Chloride		275	135
Ethyl Chloroacetate		75	25
Ethyl Chloroformate		125	50
Ethyl Cyanoacetate		75	25
Ethyl Ether		125	50
Ethyl Formate		75	25
Ethylbenzene		125	50
Ethylene Chlorohydrin	Aqueous solution or liquid	75	25
Ethylene Dichloride		275	135
Ethylene Glycol	Aqueous solution or liquid	275	135
Ethylene Oxide		NR	

KYNAR®

Chemical Substance	Concentration[a]	Maximum[b] Temperature °F	°C
Ethylenediamine	Aqueous solution or liquid	225	110
2-Ethyl-1-hexanol		250	120
Fatty Acids		275	135
Fatty Acids, Sulfonates		175	80
Ferric Chloride	Aqueous solution or solid	275	135
Ferric Hydroxide		250	120
Ferric Nitrate	Aqueous solution or solid	275	135
Ferric Sulfate		275	135
Ferric Sulfide		250	120
Ferrous Chloride	Aqueous solution or solid	275	135
Ferrous Hydroxide		250	120
Ferrous Nitrate	Aqueous solution or solid	275	135
Ferrous Sulfate		275	135
Fluorine		75	25
Fluoroboric Acid	Aqueous solution	275	135
Fluosilicic Acid		275	135
Formaldehyde	37% in water	125	50
Formic Acid	Aqueous solution or liquid	250	120
Fructose	Aqueous solution or solid	275	135
Fruit Juices, Pulp		200	95
Fuel Oil		275	135
Fumaric Acid		170	65
Furan		NR	
Furfural		75	25
Furfuryl Alcohol	Aqueous solution or liquid	100	40
Gallic Acid		75	25
Gas, manufactured		275	135
Gas, natural		275	135
Gasoline, leaded		275	135
Gasoline, sour		275	135
Gasoline, unleaded		275	135
Gelatin		250	120
Gin		200	95
Glucose	Aqueous solution or solid	275	135
Glue		250	120
Glutamic Acid		200	95
Glycerin	Aqueous solution or liquid	275	135
Glycine	Aqueous solution or solid	75	25
Glycolic Acid		75	25
Heptane		275	135
Hexachloro-1,3-butadiene		125	50
Hexamethylenediamine		NR125	NR50
Hexamethylphosphotriamide		NR	
Hexane		275	135
Hexyl Alcohol		175	80
Hydrazine	Aqueous solution or liquid	200	95
Hydrazine Dihydrochloride	Aqueous solution or solid	75	25
Hydrazine Hydrate	Aqueous solution or liquid	125	50
Hydriodic Acid	Aqueous solution	275	135
Hydrobromic Acid	Up to 50% in water	275	135
Hydrochloric Acid	Up to "concentrated"	275	135
Hydrocyanic Acid	Aqueous solution	275	135
Hydrofluoric Acid	Up to 40% in water	250	120
Hydrofluoric Acid	41—100 % in water	200	95
Hydrogen		275	135
Hydrogen Chloride		275	135
Hydrogen Cyanide		275	135
Hydrogen Fluoride		200	95
Hydrogen Peroxide	Up to 30% in water	200	95
Hydrogen Peroxide	90% in water	70	20
Hydrogen Sulfide		275	135

Maximum usage temperatures for KYNAR resin with selected chemicals.

Counsult your KYNAR products representative if you have any questions or for more recent results.

---

[a] pure substance unless otherwise indicated.

[b] temperatures in °F have been rounded to °C in 5 degree increments.

[c] NR indicates that KYNAR resin is not recommended for use with the chemical at room temperature or at the temperature indicated.

Chemical Substance	Concentration[a]	Maximum[b] Temperature °F	°C
Hydrogen Sulfide	Aqueous solution	225	110
Hydroquinone		250	120
Hypochlorous Acid	Aqueous solution	70	20
Iodine	10% in Non-Aqueous solvent	150	65
Iodine, gas		150	65
Iodoform		200	95
Isoamyl Ether		250	120
Isobutyl Alcohol		250	120
Isooctane		250	120
Isophorone		175	80
Isopropyl Alcohol	Aqueous solution or liquid	140	60
Isopropyl Chloride		100	40
Isopropyl Ether		125	50
Isopropylbenzene		100	40
Jet Fuel (JP4, JP5)		200	95
Kerosene		275	135
Lactic Acid	Aqueous solution or pure	125	50
Lanolin		250	120
Lard Oil		275	135
Lauric Acid		225	110
Lauroyl Chloride		250	120
Lauryl Mercaptan		200	95
Lauryl Sulfate		250	120
Lead Acetate	Aqueous solution or solid	275	135
Lead Chloride		250	120
Lead Nitrate	Aqueous solution or solid	250	120
Lead Sulfate		250	120
Lemon Oil		250	120
Linoleic Acid		250	120
Linseed Oil		275	135
Lithium Bromide	Aqueous solution or solid	225	110
Lithium Chloride	Aqueous solution or solid	250	120
Lubricating Oil		275	135
Magnesium Carbonate		275	135
Magnesium Chloride	Aqueous solution or solid	275	135
Magnesium Citrate		250	120
Magnesium Hydroxide		275	135
Magnesium Nitrate	Aqueous solution or solid	275	135
Magnesium Sulfate	Aqueous solution or solid	275	135
Maleic Acid	Aqueous solution or solid	250	120
Maleic Anhydride		75	25
Malic Acid	Aqueous solution or solid	250	120
Maganese Sulfate	Aqueous solution or solid	250	120
Mercuric Chloride		250	120
Mercuric Cyanide		250	120
Mercuric Nitrate	Aqueous solution or solid	275	135
Mercury		275	135
Methacrylic Acid		125	50
Methane		275	135
Methanesulfonic Acid	Aqueous solution or liquid	200	95
Methyl Acetate		100	40
Methyl Acrylate		100	40
Methyl Alcohol	Aqueous solution or liquid	275	135
Methyl Bromide		275	135
Methyl Chloride		275	135
Methyl Chloroacetate		75	25
Methyl Chloromethyl Ether		75	25
Methyl Ethyl Ketone		NR	
Methyl Isobutyl Ketone		NR	
Methyl Methacrylate		125	50
Methyl Salicylate		150	65

KYNAR®

Chemical Substance	Concentration[a]	Maximum[b] Temperature °F	°C
Methylamine		NR	
Methylchloroform		125	50
Methylene Bromide		175	80
Methylene Chloride		NR	
Methylene Iodide		200	95
Methylsulfuric Acid	Aqueous solution or liquid	125	50
Methyltrichlorosilane		150	65
Milk		225	110
Mineral Oil		275	135
Molasses		150	65
Morpholine	Aqueous solution or liquid	75	25
Naphtha		275	135
Naphthalene		200	95
Nickel Acetate	Aqueous solution or solid	250	120
Nickel Chloride	Aqueous solution or solid	275	135
Nickel Nitrate	Aqueous solution or solid	275	135
Nickel Sulfate	Aqueous solution or solid	275	135
Nicotine		70	20
Nicotinic Acid		250	120
Nitric Acid	Up to 10% in water	175	50
Nitric Acid	11—50% in water	125	50
Nitric Acid	"Concentrated"	NR	
Nitric Acid, fuming		NR	
Nitrobenzene		75	25
Nitroethane		70	20
Nitrogen		275	135
Nitrogen Dioxide		170	75
Nitroglycerin		125	50
Nitromethane		120	50
Nitrotoluene		175	80
Nitrous Oxide		NR	
Octane		275	135
Octene		275	135
Oleic Acid		250	120
Oleum		NR	
Olive Oil		250	120
Oxalic Acid		125	50
Oxygen		275	135
Ozone		225	110
Palm Oil		200	95
Palmitic Acid		250	120
Paraffin		250	120
Paraffin Oil		250	120
Peanut Oil		250	120
Perchloric Acid	10% in water	200	95
Perchloric Acid	70% in water	125	50
Perchloroethylene		275	135
Perchloromethyl Mercaptan		125	50
Petrolatum		275	135
Petroleum		250	120
Phenol	5% in water	175	80
Phenol		125	50
1-Phenol-2-sulfonic Acid		125	50
Phenyl Ether		125	50
Phenylhydrazine		125	50
Phenylhydrazine Hydrochloride	Aqueous solution or solid	125	50
o-Phenylphenol		175	80
Phosgene		175	80
Phosphoric Acid	Less than 85% in water	275	135
Phosphoric Acid	85% in water	225	110
Phosphorus, red		75	25

Maximum usage temperatures for KYNAR resin with selected chemicals.

Counsult your KYNAR products representative if you have any questions or for more recent results.

[a] pure substance unless otherwise indicated.

[b] temperatures in °F have been rounded to °C in 5 degree increments.

[c] NR indicates that KYNAR resin is not recommended for use with the chemical at room temperature or at the temperature indicated.

Chemical Substance	Concentration[a]	Maximum[b] Temperature °F	°C
Phosphorus Oxychloride		NR	
Phosphorus Pentachloride		200	95
osphorus Pentoxide		200	95
hosphorus Trichloride		200	95
Phthalic Acid		200	95
Picric Acid		75	25
Plating Solutions: Brass		200	95
Cadmium		200	95
Chrome		200	95
Copper		200	95
Iron		200	95
Lead		200	95
Nickel		200	95
Rhodium		200	95
Silver		200	95
Speculum		200	95
Tin		200	95
Zinc		200	95
Polyethylene Glycol		200	95
Polyvinyl Acetate		275	135
Polyvinyl Alcohol		275	135
Potassium		NR	
Potassium Acetate	Aqueous solution or solid	275	135
Potassium Alum	Aqueous solution or liquid	275	135
Potassium Aluminum Chloride		275	135
Potassium Bicarbonate	Aqueous solution or solid	200	95
Potassium Bisulfate	Aqueous solution or solid	275	135
Potassium Borate	Aqueous solution or solid	275	135
Potassium Bromate	Aqueous solution or solid	275	135
Potassium Bromide	Aqueous solution or solid	275	135
Potassium Carbonate	Aqueous solution or solid	275	135
Potassium Chlorate		200	95
Potassium Chloride	Aqueous solution or solid	275	135
Potassium Chromate	Aqueous solution or solid	275	135
Potassium Cyanide	Aqueous solution or solid	275	135
Potassium Dichromate		275	135
Potassium Ferricyanide	Aqueous solution or solid	275	135
Potassium Ferrocyanide	Aqueous solution or solid	275	135
Potassium Fluoride	Aqueous solution or solid	275	135
Potassium Hydroxide	Up to 10% in water	180	85
Potassium Hydroxide	Greater than 50% in water	NR	
Potassium Hypochlorite	Aqueous solution	200	95
Potassium Iodide	Aqueous solution or solid	250	120
Potassium Nitrate	Aqueous solution or solid	275	135
Potassium Perborate		275	135
Potassium Perchlorate		200	95
Potassium Permanganate	Aqueous solution or solid	250	120
Potassium Persulfate		125	50
Potassium Sulfate	Aqueous solution or solid	275	135
Potassium Sulfide		275	135
Propane		275	135
Propyl Acetate		100	40
Propyl Alcohol	Aqueous solution or liquid	150	65
Propylamine		NR	
Propylene Dibromide		200	95
Propylene Dichloride		200	95
Propylene Glycol	Aqueous solution or liquid	150	65
Propylene Oxide		NR	
Pyridine		NR	
Pyrogallol	Aqueous solution or solid	120	50
Salicylaldehyde		125	50

KYNAR®

Chemical Substance	Concentration[a]	Maximum[b] Temperature °F	°C
Salicylic Acid		200	95
Selenic Acid	Aqueous solution or pure	150	65
con Tetrachloride		125	50
ilicone Oil		250	120
Silver Cyanide		275	135
Silver Nitrate	Aqueous solution or solid	275	135
Silver Sulfate		250	120
Sodium		NR	
Sodium Acetate	Aqueous solution or solid	275	135
Sodium Amalgam		NR	
Sodium Benzoate	Aqueous solution or solid	275	135
Sodium Bicarbonate	Aqueous solution or solid	275	135
Sodium Bisulfate	Aqueous solution or solid	275	135
Sodium Bisulfite	Aqueous solution or solid	275	135
Sodium Bromate	Aqueous solution or solid	200	95
Sodium Bromide	Aqueous solution or solid	275	135
Sodium Carbonate	Aqueous solution or solid	275	135
Sodium Chlorate	Aqueous solution or solid	250	120
Sodium Chlorite	Aqueous solution or solid	250	120
Sodium Chromate	Aqueous solution or solid	200	95
Sodium Cyanide	Aqueous solution or solid	275	135
Sodium Dichromate	Aqueous solution or solid	200	95
Sodium Dithionite	Aqueous solution or solid	100	40
Sodium Ferricyanide	Aqueous solution or solid	275	135
Sodium Ferrocyanide	Aqueous solution or solid	275	135
Sodium Fluoride	Aqueous solution or solid	275	135
Sodium Fluosilcate		200	95
Sodium Hydrogen Phosphate	Aqueous solution or solid	250	120
Sodium Hydroxide	Up to 10% in water	180	85
Sodium Hydroxide	Greater then 50% in water	NR	
Sodium Hypochlorite	Up to 5% in water	275	135
Sodium Hypochlorite	6—15% in water	200	95
Sodium Iodide	Aqueous solution or solid	275	135
Sodium Nitrate	Aqueous solution or solid	275	135
Sodium Nitrite	Aqueous solution or solid	275	135
Sodium Palmitate		250	120
Sodium Perchlorate	Aqueous solution or solid	250	120
Sodium Peroxide		200	95
Sodium Phosphate	Aqueous solution or solid	275	135
Sodium Thiocyanate	Aqueous solution or solid	250	120
Sodium Thiosulfate	Aqueous solution or solid	275	135
Sour Crude Oil		275	135
Soybean Oil		250	120
Stannic Chloride	Aqueous solution or liquid	275	135
Stannous Chloride	Aqueous solution or solid	275	135
Starch		200	95
Stearic Acid		275	135
Stilbene		175	80
Styrene		180	85
Succinic Acid		150	65
Sugar Syrup		275	135
Sulfur		250	120
Sulfur Chloride		75	25
Sulfur Dichloride		75	25
Sulfur Dioxide		175	80
Sulfur Trioxide		NR	
Sulfuric Acid	Up to 60% in water	250	120
Sulfuric Acid	60—93% in water	200	95
Sulfuric Acid	98% in water	150	65
Sulfuric Acid, fuming		NR	
Sulfuryl Chloride		NR	

Maximum usage temperatures for KYNAR resin with selected chemicals.

Counsult your KYNAR products representative if you have any questions or for more recent results.

[a] pure substance unless otherwise indicated.

[b] temperatures in °F have been rounded to °C in 5 degree increments.

[c] NR indicates that KYNAR resin is not recommended for use with the chemical at room temperature or at the temperature indicated.

Chemical Substance	Concentration[a]	Maximum[b] Temperature °F	°C
Sulfuryl Fluoride		75	25
Tall Oil		275	135
Tallow		275	135
Tannic Acid		225	110
Tar		250	120
Tartaric Acid	Aqueous solution or solid	250	120
1,1,2,2-Tetrabromoethane		250	120
1,1,2,2-Tetrachloroethane		250	120
2,3,4,6-Tetrachlorophenol		150	65
Tetraethyllead		275	135
Tetrahydrofuran	Aqueous solution or liquid	NR	
Tetramethylammonium Hydroxide	Up to 10% in water	200	95
Tetramethylurea		NR	
Thioglycol		75	25
Thioglycolic Acid		175	80
Thionyl Chloride		NR	
Thiophosphoryl Chloride		NR	
Thread Cutting Oils		200	95
Titanium Tetrachloride		150	65
Toluene		175	80
Toluenesulfonyl Chloride		125	50
Tomato Juice		200	95
Tributyl Phosphate		75	25
Trichloroacetic Acid	Up to 10% in water	200	95
Trichloroacetic Acid	50% in water to pure	125	50
1,2,4,-Trichlorobenzene		200	95
1,1,2-Trichloroethane		150	65
Trichloroethylene		275	135
2,4,5-Trichlorophenol		150	65
Tricresyl Phosphate		NR	
Triethanolamine	Aqueous solution or liquid	125	50
Triethyl Phosphate		NR	
Triethylamine		125	50
Trifluoroacetic Acid	50% in water	200	95
Trifluoroacetic Acid		125	50
Trimethylamine	Aqueous solution or gas	150	65
Turpentine		275	135
Urea	Aqueous solution or solid	250	120
Varnish		250	120
Varsol		250	120
Vegetable Oil		275	135
Vinegar		225	110
Vinyl Acetate		250	120
Vinyl Chloride		200	95
Vinylidene Chloride		200	95
Water		275	135
Water, salt		275	135
Water, sewage		250	120
Whiskey		200	95
Wine		200	95
Xylene		200	95
Zinc Acetate	Aqueous solution or solid	250	120
Zinc Bromide	Aqueous solution or solid	250	120
Zinc Chloride	Aqueous solution or solid	275	135
Zinc Nitrate	Aqueous solution or solid	275	135
Zinc Sulfate	Aqueous solution or solid	275	135

The ratings given on the previous pages are a guide and do not constitute a warranty of any kind, expressed or implied, with respect to the performance of KYNAR® polyvinylidene fluoride in any specific application.

KYNAR®

KYNAR FOR PIPE FOR TANKS 1-5

PIPE for TANKS 1-5

CHEMICAL RESISTANCE

CODES

A ..... Excellent = Recommended
B ..... Good = Recommended
C ..... Fair (with conditions)
X ..... Not Recommended

All information, recommendations and suggestions appearing in this literature concerning the use of our products are based upon tests and data believed to be reliable; however, it is the user's responsibility to determine the suitability for his own use of the products described herein. Since the actual use by others is beyond our control, no guarantee, expressed or implied, is made by Asahi/America as to the effects of such use or the results to be obtained, nor does Asahi assume any liability arising out of use, by others, of the products referred to herein. Nor is the information herein to be construed as absolutely complete since additional information may be necessary or desirable when particular or exceptional conditions or circumstances exist or because of applicable laws or government regulations. Nothing herein contained is to be construed as permission or as a recommendation to infringe any patent.

Chemicals	Concentration (%)	Temp. °C	Temp. °F	PVC	CPVC	PP	PVDF	TEFLON	VITON	EPT	NITRILE
Acetaldehyde		20	68	X	X	A	X	A	C	A	X
		40	104			A		A	C	A	
		60	140			B		A	X	B	
		80	176					A			
		100	212					A			
		120	248					A			
Acetaldehyde Aqueous	40	20	68	X	X	A	X	A	B	A	X
		40	104			A		A	B	A	
		60	140			A		A	C	A	
		80	176			B		A	X	B	
		100	212					A		C	
		120	248					A			
Acetic Acid	10	20	68	A	A	A	A	A	B	A	X
		40	104	A	A	A	A	A	B	A	
		60	140	A	A	A	A	A	C	B	
		80	176		A	B	B	A	X		
		100	212				B	A			
		120	248				B	A			
Acetic Acid	20	20	68	A	A	A	A	A	B	A	X
		40	104	B	A	A	A	A	C	A	
		60	140	C	A	B	A	A	C	B	
		80	176		B	C	B	A	X		
		100	212		C		B	A	X		
		120	248				B	A			
Acetic Acid	50	20	68	A	A	A	A	A	X	B	X
		40	104	B	B	B	A	A	X	C	
		60	140	C	C	C	A	A			
		80	176		X		B	A			
		100	212				B	A			
		120	248				B	A			
Acetic Acid	80	20	68	A	B	B	A	A	X	B	X
		40	104	B	C	C	B	A			
		60	140	C	X	X	C	A			
		80	176				X	A			
		100	212					A			
		120	248					A			

Chemicals	Concentration (%)	Temp. °C	Temp. °F	PVC	CPVC	PP	PVDF	TEFLON	VITON	EPT	NITRILE
Acetic Acid (Glacial)		20	68	X	X	B	A	A	X	X	X
		40	104			C	B	A			
		60	140			X	B	A			
		80	176			X	B	A			
		100	212				C	A			
		120	248				X	A			
Acetic Anhydride	Pure	20	68	X	X	B	B	A	X	C	X
		40	104			C	C	A		X	
		60	140			X	X	A			
		80	176					A			
		100	212					A			
		120	248					A			
Acetone	Pure	20	68	X	X	A	X	A	X	B	X
		40	104			A		A	X	B	
		60	140			C		A	X		
		80	176					A			
		100	212					A			
		120	248					A			
Acetone Aqueous	Trace	20	68	A	A	A	A	A	A	A	B
		40	104	A	A	A	A	A	A	A	C
		60	140	B	B	A	A	A	A	A	
		80	176			A	B	A	A	B	
		100	212				B	A	A	B	
		120	248				B	A			
Acetonitrile		20	68			B	A	A		A	C
		40	104				A	A			
		60	140				C	A			
		80	176				X				
		100	212								
		120	248								
Acetophenone		20	68			A	A	A	C	A	X
		40	104			B	C	A	X	A	X
		60	140			C	X	A	X	A	X
		80	176			X		A	X	B	X
		100	212					A			
		120	248					A			
Acetyl Acetone		20	68	X	X		X				
		40	104								
		60	140								
		80	176								
		100	212								
		120	248								
Acetyl Bromide		20	68				A	A			
		40	104				A	A			
		60	140				A	A			
		80	176				B	A			
		100	212				B	A			
		120	248				B	A			
Acetyl Chloride		20	68			A	A	A	X	X	X
		40	104			A	B	A			
		60	140			C	C	A			
		80	176			X	X	A			
		100	212					A			
		120	248								
Acetylene		20	68	X	X	A	A	A	A	C	A
		40	104			A	A	A	A	C	A
		60	140			A	A	A	A	X	B
		80	176			B	A	A	A		
		100	212				A	A	B		
		120	248				A	B			
Acrylic Acid Ethyl Ester		20	68	X			A	A			
		40	104				B	A			
		60	140				C	A			
		80	176				X	B			
		100	212								
		120	248								

Chemicals	Concentration (%)	Temp. °C	Temp. °F	PVC	CPVC	PP	PVDF	TEFLON	VITON	EPT	NITRILE
Acrylonitrile		20	68			B	A	A	X	A	X
		40	104			C	B	A		A	
		60	140				C	A		B	
		80	176					A			
		100	212					A			
		120	248					A			
Adipic Acid Aqueous	Satu	20	68	A	A	A	A	A	A	A	A
		40	104	A	A	A	A	A	A	A	A
		60	140	A	A	A	A	A	A	A	A
		80	176		B	B	A	A	A	B	
		100	212				A	A	B	B	
		120	248				A	A			
Allyl Alcohol		20	68	X	X	A	A	A	A		A
		40	104			A	A	A	A		B
		60	140			B	A	A	A		B
		80	176				A	A	B		
		100	212				A	A			
		120	248				B	B			
Allyl Chloride		20	68	X			A	A	B	X	B
		40	104				C	A	B	X	C
		60	140				X	A	C	X	X
		80	176					A		X	
		100	212					A		X	
		120	248					A			
Alum (Potassium alum)	Satu	20	68	A	A	A	A	A	A	A	A
		40	104	A	A	A	A	A	A	A	A
		60	140	A	A	A	A	A	A	A	A
		80	176		A	A	A	A	A	B	B
		100	212				A	A	A	B	B
		120	248								
Aluminum Acetate	Satu	20	68	A	A	A	A	A	A	A	A
		40	104	B	B	A	A	A	A	A	A
		60	140				A	A	A	A	A
		80	176				A	A	A	A	
		100	212				A	A			
		120	248				A	A			
Aluminum Ammonium Sulfate (Alum)	Satu	20	68			A	A	A	A	A	A
		40	104			A	A	A	A	A	A
		60	140			A	A	A	A	A	A
		80	176			A	A	A	A	A	B
		100	212			A	A	A	A	A	
		120	248				B	B			
Aluminum Bromide	Satu	20	68	A	A	A	A	A	A	A	A
		40	104	A	A	A	A	A	A	A	A
		60	140	A	A	A	A	A	A	A	A
		80	176		A	A	A	A	A		
		100	212				A	A			
		120	248				A	A			
Aluminum Chloride	Satu	20	68	A	A	A	A	A	A	A	A
		40	104	A	A	A	A	A	A	A	A
		60	140	B	B	A	B	A	A	A	
		80	176		B	A	C	A	A	A	
		100	212				X	A	A	B	
		120	248								
Aluminum Fluoride	Satu	20	68	A	A	A	A	A	A	A	A
		40	104	A	A	A	A	A	A	A	A
		60	140	A	A	A	A	A	A	A	A
		80	176		A	A	A	A	A	A	A
		100	212				A	A	A		
		120	248				A				
Aluminum Hydroxide	Satu	20	68	A	A	A	A	A	A	A	A
		40	104	A	A	A	A	A	A	A	A
		60	140	A	A	A	A	A	A	A	A
		80	176		A	A	A	A	A	B	B
		100	212				A	A	B	B	B
		120	248				A				

Chemicals	Concentration (%)	Temp. °C	Temp. °F	PVC	CPVC	PP	PVDF	TEFLON	VITON	EPT	NITRILE
Aluminum Nitrate	Satu	20	68	A	A	A	A	A	A	A	A
		40	104	A	A	A	A	A	A	A	A
		60	140	A	A	A	A	A	A	A	A
		80	176		A	A	A	A	A	A	B
		100	212				A	A	A	B	
		120	248				C				
Aluminum Sulfate	Satu	20	68	A	A	A	A	A	A	A	A
		40	104	A	A	A	A	A	A	A	A
		60	140	A	A	A	A	A	A	A	A
		80	176		A	A	A	A			
		100	212				A	A			
		120	248								
Amber Acid (Succinic Acid)	Satu	20	68	A	A	A	A	A	A	A	A
		40	104	A	A	A	A	A	A	A	A
		60	140	A	A	A	A	A	A	A	A
		80	176		B	B	A	A	A	A	A
		100	212				A	A	A	A	B
		120	248				A	A			
Ammonia Gas	100	20	68	A	A	A	A	A	X	A	A
		40	104	A	A	A	A	A		A	A
		60	140	A	B	B	A	A		A	B
		80	176		C	B	A	A		B	
		100	212				B	A			
		120	248				B	A			
Ammonia Liquid	100	20	68	C	C	A	A	A	C	A	A
		40	104	X	X	B	A	A		B	B
		60	140	X		C	A	A		B	B
		80	176			X	A	A		C	C
		100	212			X	A	A		C	C
		120	248				B	A			
Ammonia Water	10	20	68	A	A	A	A	A	B	A	A
		40	104	A	A	A	A	A	C	A	B
		60	140	A	A	A	A	A	X	A	B
		80	176		B	B	A	A		A	
		100	212				A	A		A	
		120	248				B	A			
Ammonium Acetate	Satu	20	68	A	A	A		A	A	A	A
		40	104	A	A	A		A	A	A	A
		60	140	A	A	A		A	A	A	A
		80	176		B	B		A	B	B	B
		100	212					A	B	B	
		120	248					A			
Ammonium Bifluoride	Satu	20	68	A	A	A	A	A	A	A	A
		40	104	A	A	A	A	A	A	A	A
		60	140	A	A	A	A	A	A	A	A
		80	176		A	A	A	A	B	B	B
		100	212				A	A	B	B	B
		120	248				A	A			
Ammonium Carbonate	Satu	20	68	A	A	A	A	A	A	A	A
		40	104	A	A	A	A	A	A	A	A
		60	140	A	A	A	A	A	A	A	A
		80	176		A	A	A	A	A	A	
		100	212				A	A	A	B	
		120	248				A	A			
Ammonium Chloride	Satu	20	68	A	A	A	A	A	A	A	A
		40	104	A	A	A	A	A	A	A	A
		60	140	A	A	A	A	A	A	A	A
		80	176		B	B	A	A	A	A	B
		100	217				A	A	A	B	
		120	248				A	A			
Ammonium Fluoride	20	20	68	A		A	A	A	A	A	A
		40	104	B		A	A	A	A	A	A
		60	140	X		A	A	A	A	A	
		80	176			B	A	A			
		100	212				A	A			
		120	248				A	A			

Chemicals	Concentration (%)	Temp. °C	Temp. °F	PVC	CPVC	PP	PVDF	TEFLON	VITON	EPT	NITRILE
Ammonium Hydroxide		20	68	A	A	A	A	A	B	A	B
		40	104	A	A	A	A	A	B	A	X
		60	140	A	A	A	A	A	C	A	
		80	176			A	A	A			
		100	212				A	A			
		120	248				A	A			
Ammonium Metaphosphate		20	68	A	A	A	A	A	A	A	A
		40	104	A	A	A	A	A	A	A	B
		60	140	A	A	A	A	A	A	A	B
		80	176		A	A	A	A	A	A	
		100	212				A	A			
		120	248				A	A			
Ammonium Nitrate		20	68	B	B	A	A	A	A	A	A
		40	104	B	B	A	A	A	A	A	A
		60	140	B	B	A	A	A	A	A	A
		80	176			A	A	A	A	A	A
		100	212				A	A			
		120	248				A	A			
Ammonium Phosphate		20	68	A	A	A	A	A	A	A	A
		40	104	A	A	A	A	A	A	A	A
		60	140	A	A	A	A	A	A	A	B
		80	176		A	A	A	A	A	A	
		100	212				A	A			
		120	248				A	A			
Ammonium Sulfate	Satu	20	68	A	A	A	A	A	A	A	A
		40	104	A	A	A	A	A	A	A	A
		60	140	A	A	A	A	A	A	A	A
		80	176		A	A	A	A	A	A	A
		100	212				A	A			
		120	248				A	A			
Ammonium Sulfide	Satu	20	68	A	A	A	A	A			
		40	104			A	A	A			
		60	140			A	A	A			
		80	176			A	A	A			
		100	212				A	A			
		120	248				A	A			
Amyl Acetate	Pure	20	68	X	X	X	A	A	X	B	X
		40	104				B	A		C	
		60	140				C	B			
		80	176								
		100	212								
		120	248								
Amyl Alcohol	Pure	20	68	A	A	A	A	A	A	A	B
		40	104	A	A	A	A	A	A	A	B
		60	140	A	A	A	A	A	B	A	B
		80	176		B	B	A	A	B	A	
		100	212				A	A			
		120	248				B	A			
Amyl Borate	Pure	20	68				A	A	A	B	A
		40	104				A	A			
		60	140				A	A			
		80	176				A	A			
		100	212				A	A			
		120	248				A	A			
Amyl Chloride	Pure	20	68	X	X	X	A	A	B	X	B
		40	104				A	A			
		60	140				A	A			
		80	176				B	A			
		100	212				B	A			
		120	248				X	A			
Aniline	Pure	20	68	C	C	B	A	A	B	B	X
		40	104	X	X	B	B	A	B	C	
		60	140			C	B	A	B	X	
		80	176			X	C	A			
		100	212				X	A			
		120	248					A			

Chemicals	Concentration (%)	Temp. °C	Temp. °F	PVC	CPVC	PP	PVDF	TEFLON	VITON	EPT	NITRILE
Aniline Hydrochloride	Pure	20	68	B			A	A	A		
		40	104	B			A	A	A		
		60	140	C			B	A	A		
		80	176				X	A			
		100	212								
		120	248								
Animal Oil (Lard)		20	68	A	A	A	A	A	A	A	A
		40	104	A	A	A	A	A	A	A	A
		60	140	A	A	A	A	A	A	A	A
		80	176		A	A	A	A			
		100	212				A	A			
		120	248				A	A			
Antimony Trichloride	Satu	20	68	A		A	A	A	A	B	
		40	104	A		A	B	A	A		
		60	140	B		B	C	B	A		
		80	176			B	C	B	B		
		100	212				X	B			
		120	248				X	B			
Aqua Regia		20	68	C	C	C	A	A	C	X	X
		40	104	C	C	C	A	A			
		60	140			X	A	A			
		80	176				A	A			
		100	212				B	A			
		120	248				C	B			
Arsenic Acid	Satu	20	68	A	A	A	A	A	A	A	A
		40	104	B	B	A	A	A	A	A	A
		60	140	C	B	B	A	A	A	B	B
		80	176		C	C	A	A	B	B	B
		100	212				B	A	B		
		120	248				C	A			
Asphalt		20	68	X	X	A	A	A	A	X	B
		40	104			A	A	A	A		B
		60	140			A	A	A	A		
		80	176				A	A	A		
		100	212				A	A			
		120	248				A	A			
Barium Carbonate	Satu	20	68	A	A	A	A	A	A	A	A
		40	104	A	A	A	A	A	A	A	A
		60	140	A	A	A	A	A	A	A	A
		80	176		A	A	A	A	A	A	B
		100	212				A	A	A		
		120	248				A	A	A		
Barium Chloride	Satu	20	68	A	A	A	A	A	A	A	A
		40	104	A	A	A	A	A	A	A	A
		60	140	A	A	A	A	A	A	A	A
		80	176		A	A	A	A	A	A	B
		100	212				A	A	A		
		120	248				A	A	A		
Barium Hydroxide	Satu	20	68	A	A	A	A	A	A	A	A
		40	104	A	A	A	A	A	A	A	A
		60	140	A	A	A	A	A	A	A	A
		80	176		A	A	A	A	A	A	B
		100	212				A	A	A	B	
		120	248				A	A	A		
Barium Nitrate	Satu	20	68	A	A	A	A	A	A	A	A
		40	104	A	A	A	A	A	A	A	A
		60	140	A	A	A	A	A	A	A	A
		80	176		A	A	A	A	A	A	B
		100	212				A	A	A	B	
		120	248				A		A		
Barium Sulfate	Satu	20	68	A	A	A	A	A	A	A	A
		40	104	A	A	A	A	A	A	A	A
		60	140	A	A	A	A	A	A	A	A
		80	176		A	A	A	A	A	A	B
		100	212				A	A	A		
		120	248				A	A	A		

Chemicals	Concentration (%)	Temp. °C	Temp. °F	PVC	CPVC	PP	PVDF	TEFLON	VITON	EPT	NITRILE
Barium Sulfide	Satu	20	68	A	A	A	A	A	A	A	B
		40	104	A	A	A	A	A	A	A	B
		60	140	A	A	A	A	A	A	A	
		80	176		A	A	A	A	A		
		100	212				A	A	A		
		120	248				A	A	A		
Beer		20	68	A	A	A	A	A	A	A	B
		40	104	A	A	A	A	A	A	A	B
		60	140	A	A	A	A	A	A	A	B
		80	176		A	A	A	A	A	A	B
		100	212				A	A			
		120	248				A	A			
Beet Sugar Liquors		20	68	A	A	A	A	A	A	A	A
		40	104	A	A	A	A	A	A	A	A
		60	140	A	A	A	A	A	A	A	A
		80	176		A	A	A	A	A		
		100	212				A	A			
		120	248				A	A			
Benzaldehyde	10	20	68	A		A	A	A	C	C	X
		40	104	A		A	A	A			
		60	140	A		B	B	A			
		80	176					A			
		100	212					A			
		120	248								
Benzaldehyde	Above 10	20	68	A		A	A	A	C	C	X
		40	104			B	B	A			
		60	140								
		80	176								
		100	212								
		120	248								
Benzene	Pure	20	68	C	C	B	A	A	B	X	X
		40	104	X	X	C	B	A	B		
		60	140				B	A	B		
		80	176				C	A	B		
		100	212				X	A			
		120	248					A			
Benzene Sulfonic Acid	10	20	68	X	X	X	B	A	A		X
		40	104				B	A	A		X
		60	140				C	A	A		
		80	176				X	A			
		100	212					A			
		120	248					B			
Benzine	Pure	20	68	X	X	A	A	A	A	X	A
		40	104			B	A	A	A		A
		60	140			C	B	A	B		B
		80	176					A	B		
		100	212					A			
		120	248								
Benzoic Acid	Pure	20	68	A	A	A	A	A	A	A	B
		40	104	A	A	B	A	A	A	A	B
		60	140	B	B	C	A	A	A	A	B
		80	176		C	X	A	A	A	B	
		100	212		C		A	A	B		
		120	248				B				
Benzyl Alcohol	Pure	20	68			A	A	A	A	B	X
		40	104			A	A	A	A	B	
		60	140			A	A	A	A	C	
		80	176				A	A	B		
		100	212				B	A	B		
		120	248					A			
Benzyl Benzoate	Satu	20	68							B	X
		40	104								
		60	140								
		80	176								
		100	212								
		120	248								

Chemicals	Concentration (%)	Temp. °C	Temp. °F	PVC	CPVC	PP	PVDF	TEFLON	VITON	EPT	NITRILE
Benzyl Chloride	Pure	20	68			A	A	A			
		40	104				A	A			
		60	140				A	A			
		80	176				A	A			
		100	212				A				
		120	248				A				
Black Liquor	Satu	20	68	A	A	A	A	A	A	A	A
		40	104	A	A	A	A	A	A	A	A
		60	140	B	A	A	A	A	A	A	A
		80	176		B	B	A	A	A	A	B
		100	212				A	A	A		
		120	248								
Bleaching Agent	5	20	68	A	A		A	A	A	A	C
		40	104	A	A		A	A	A	A	
		60	140	A	A		A	A			
		80	176				A	A			
		100	212				A				
		120	248				A				
Bleaching Agent	12	20	68	A	A		A	A	A	B	C
		40	104	A	A		A	A			
		60	140	A			A	A			
		80	176				A	A			
		100	212				A				
		120	248				A				
Borax	Satu	20	68	A	A	A	A	A	A	A	A
		40	104	A	A	A	A	A	A	A	B
		60	140	A	A	A	A	A	A	A	C
		80	176		A	A	A	A	A		X
		100	212				A	A			
		120	248				A	A			
Boric Acid	Satu	20	68	A	A	A	A	A	A	A	A
		40	104	A	A	A	A	A	A	A	A
		60	140	A	A	A	A	A	A	A	A
		80	176		B	A	A	A	A	B	B
		100	212				A	A	B		
		120	248				A	A			
Borofluoric Acid		20	68	A	A	A	A	A	A	A	
		40	104	A	A	A	A	A	A	A	
		60	140	B	A	A	A	A	A	A	
		80	176		A	B	A	A	A	B	
		100	212				A	A			
		120	248				A	A			
Brine		20	68	A	A	A	A	A	A	A	A
		40	104	A	A	A	A	A	A	A	A
		60	140	A	A	A	A	A	A	A	B
		80	176		A	A	A	A	A	B	
		100	212				A	A	B		
		120	248				A	A			
Bromic Acid	Pure	20	68			X	A	A			
		40	104				A	A			
		60	140				A	A			
		80	176				A	A			
		100	212				A				
		120	248				B				
Bromine Vapor	25	20	68	B		X	A	A	A	X	X
		40	104	C			A	A	A		
		60	140				A	A	A		
		80	176				B				
		100	212				B				
		120	248				B				
Bromine Water	Satu	20	68	B	C	C	A	A	A	X	X
		40	104	C		X	A	A	A		
		60	140				A	A			
		80	176				B				
		100	212				B				
		120	248				B				

Chemicals	Concentration (%)	Temp. °C	Temp. °F	PVC	CPVC	PP	PVDF	TEFLON	VITON	EPT	NITRILE
Butadiene	Gas	20	68	A	A		A	A	A	X	B
		40	104	A	A		A	A	A		C
		60	140	A			A	A	A		
		80	176				A	A			
		100	212				A	A			
		120	248				A	A			
Butane	Gas	20	68	A	A	A	A	A	A	X	C
		40	104	A	A	A	A	A	A		
		60	140	A	A	A	A	A	A		
		80	176		A	A	A	A	A		
		100	212				A	A			
		120	248				A	A			
Butyl Acetate	Pure	20	68	C	C	C	A	A	X	B	X
		40	104	X	X	X	B	A		C	
		60	140				X	A		X	
		80	176					B			
		100	212								
		120	248								
Butyl Acrylate	Pure	20	68	X	X	X	A	A	X	A	X
		40	104				B	A		A	
		60	140				C	A			
		80	176				X				
		100	212								
		120	248								
Butyl Acrylate	Satu	20	68						X	A	X
		40	104								
		60	140								
		80	176								
		100	212								
		120	248								
Butyl Alcohol	Pure	20	68	A	A	A	A	A	B	A	B
		40	104	A	A	A	A	A	B	A	B
		60	140	B	A	A	A	A	C	A	B
		80	176		B	A	A	A		A	
		100	212				A	A			
		120	248				A	A			
Butyl Amine	Satu	20	68	X	X	X	B		A	X	A
		40	104				X				
		60	140								
		80	176								
		100	212								
		120	248								
Butyl Bromide	Pure	20	68				A	A			
		40	104				A	A			
		60	140				A	A			
		80	176				A	A			
		100	212				A	A			
		120	248				B				
Butyl Carbitol		20	68							A	A
		40	104								
		60	140								
		80	176								
		100	212								
		120	248								
Butyl Cellosolve	Pure	20	68				A	A	X		X
		40	104				A	A			
		60	140				B	A			
		80	176				C	A			
		100	212				X				
		120	248								
Butyl Chloride		20	68				A	A			
		40	104				A	A			
		60	140				A	A			
		80	176				A	A			
		100	212				A	A			
		120	248				A	A			

Chemicals	Concentration (%)	Temp. °C	Temp. °F	PVC	CPVC	PP	PVDF	TEFLON	VITON	EPT	NITRILE
Butyl Diol		20	68	B			A	A	A	A	A
		40	104	C			A	A	A	A	
		60	140				A	A	A	A	
		80	176				A	A			
		100	212				A	A			
		120	248				A	A			
Butyl Ether		20	68	X	X	X	A	A	X	X	B
		40	104				A	A			
		60	140				C	A			
		80	176				X				
		100	212								
		120	248								
Butyl Mercaptan	Pure	20	68				A	A			
		40	104				A	A			
		60	140				A	A			
		80	176				A				
		100	212				A				
		120	248				B				
Butyl Phenol		20	68				A	A			
		40	104				A	A			
		60	140				A	A			
		80	176				A	A			
		100	212				A	A			
		120	248					A			
Butyl Phthalate		20	68			A	A	A	B	B	X
		40	104			A	B	A	B		
		60	140			A	C		X		
		80	176				X				
		100	212								
		120	248								
Butyl Stearate	Pure	20	68				A	A	A	C	B
		40	104				A	A	A		B
		60	140				A	A	A		C
		80	176				A	A			
		100	212				A	A			
		120	248				A	A			
Butylene		20	68				A	A	A		
		40	104				A	A	A		
		60	140				A	A	A		
		80	176				A	A	B		
		100	212				A	A			
		120	248				A	A			
Butyric Acid	Pure	20	68	X	X	A	A	A	B	B	X
		40	104			A	A	A	C		
		60	140			A	A	A	X		
		80	176			A	A	A			
		100	212				A	A			
		120	248				A	A			
Caffeine Citrate		20	68				A	A			
		40	104				A	A			
		60	140				A	A			
		80	176				A	A			
		100	212				A	A			
		120	248				A	A			
Calcium Acetate	Satu	20	68	A	A	A	A	A	A	A	A
		40	104	A	A	A	A	A	A	A	A
		60	140	A	A	A	A	A	A	A	A
		80	176		B	B	A	A	A	A	
		100	212				A	A			
		120	248				B	A			
Calcium Bisulfide	Satu	20	68	A	A	A	A	A	A		A
		40	104	A	A	A	A	A	A		B
		60	140	A		A	A	A	A		B
		80	176			A	A	A	B		
		100	212			A	A	A			
		120	248								

Chemicals	Concentration (%)	Temp. °C	Temp. °F	PVC	CPVC	PP	PVDF	TEFLON	VITON	EPT	NITRILE
Calcium Bisulfite	Satu	20	68	A	A	A	A	A	A	B	A
		40	104	A	A	A	A	A	A	B	A
		60	140		A	A	A	A	A		
		80	176			A	A	A	A		
		100	212			A	A	A			
		120	248								
Calcium Carbonate	Satu	20	68	A	A	A	A	A	A	A	A
		40	104	A	A	A	A	A	A	A	A
		60	140	A	A	A	A	A	A	A	B
		80	176		A	A	A	A	A		
		100	212		B	A	A	A	A		
		120	248			A	A	A	A		
Calcium Chlorate	Satu	20	68	A	A	A	A	A	A	A	C
		40	104	A	A	A	A	A	A	A	
		60	140	A	A	A	A	A	A	A	
		80	176		A	A	A	A			
		100	212			B	A	A			
		120	248				A	A			
Calcium Chloride	Satu	20	68	A	A	A	A	A	A	A	A
		40	104	A	A	A	A	A	A	A	A
		60	140	A	A	A	A	A	A	A	B
		80	176		A	A	A	A	A	A	B
		100	212		B	B	A	A	A		
		120	248				A	A			
Calcium Hydroxide	Satu	20	68	A	A	A	A	A	A	A	A
		40	104	A	A	A	A	A	A	A	A
		60	140	A	A	A	A	A	A	A	A
		80	176		B	A	A	A	A	A	C
		100	212			B	A	A	A		
		120	248				A				
Calcium Hypochlorite	Satu	20	68	A	A	A	A	A	A	B	C
		40	104	A	A	A	A	A	A	B	
		60	140	B	B	B	A	A	A	C	
		80	176		C	C	A	A	B	C	
		100	212		X		B	A	C	X	
		120	248								
Calcium Nitrate	Satu	20	68	A	A	A	A	A	A	A	A
		40	104	A	A	A	A	A	A	A	A
		60	140	A	A	A	A	A	A	A	A
		80	176		A	A	A	A	A	A	A
		100	212				A	A	A		
		120	248								
Calcium Sulfate	Satu	20	68	A	A	A	A	A	A	A	A
		40	104	A	A	A	A	A	A	A	A
		60	140	A	A	A	A	A	A	A	A
		80	176		A	A	A	A	A	A	B
		100	212				A	A	A		
		120	248								
Calcium Sulfide	Satu	20	68	A	A	A	A	A	A	A	A
		40	104	A	A	A	A	A	A	A	A
		60	140	A	A	A	A	A	A	A	A
		80	176			A	A	A	A	A	B
		100	212					A	A		
		120	248								
Cane Sugar Liquors		20	68	A	A	A	A	A	A	A	A
		40	104	A	A	A	A	A	A	A	A
		60	140	A	A	A	A	A	A	A	A
		80	176			A	A	A	A	A	B
		100	212				A	A	A		
		120	248				A	A			
Caprylic Acid	Pure	20	68				A	A			
		40	104				A	A			
		60	140				A	A			
		80	176				A	A			
		100	212				A	A			
		120	248				A	A			

Chemicals	Concentration (%)	Temp. °C	Temp. °F	PVC	CPVC	PP	PVDF	TEFLON	VITON	EPT	NITRILE
Carbitol	Pure	20	68	A				A	A	A	A
		40	104	B				A	B		C
		60	140					A	C		
		80	176					A			
		100	212					A			
		120	248								
Carbon Dioxide	Wet	20	68	A	A	A	A	A	A	A	A
		40	104	A	A	A	A	A	A	A	A
		60	140	A	A	A	A	A	A	A	A
		80	176		A	A	A	A	A	A	B
		100	212				A	A	A	B	
		120	248				A	A			
Carbon Dioxide	Dry	20	68	A	A	A	A	A	A	A	A
		40	104	A	A	A	A	A	A	A	A
		60	140	A	A	A	A	A	A	A	A
		80	176		A	A	A	A	A	A	B
		100	212				A	A	A	B	
		120	248				A	A			
Carbon Disulfide	Pure	20	68	C	C	X	A	A	A	X	C
		40	104	C	C			A	B		C
		60	140	X	X			A	C		X
		80	176					A	X		
		100	212					A			
		120	248								
Carbon Monoxide	Gas	20	68	A	A	A	A	A	A	A	A
		40	104	A	A	A	A	A	A	A	A
		60	140	A	A	A	A	A	A	A	A
		80	176		A	A	A	A	A	A	B
		100	212				A	A	A		
		120	248				A	A			
Carbon Tetrachloride	Pure	20	68	C	C	X	A	A	B	X	X
		40	104	X	X		A	A			
		60	140				A	A			
		80	176					A			
		100	212					A			
		120	248					A			
Carbonic Acid	Satu	20	68	A	A	A	A	A	A	A	A
		40	104	A	A	A	A	A	A	A	A
		60	140	A	A	A	A	A	A	A	A
		80	176		B	B	A	A	A	A	B
		100	212		B	B	A	A	B		X
		120	248				A	A			
Casein		20	68				A	A	A	A	
		40	104				A	A	A	A	
		60	140				A	A	A	A	
		80	176				A	A	A	A	
		100	212				A	A			
		120	248				A	A			
Castor Oil	Pure	20	68	A	A	A	A	A	A	A	A
		40	104	A	A	A	A	A	A	A	A
		60	140	A	A	A	A	A	A	A	A
		80	176		A	A	A	A			
		100	212				A	A			
		120	248				A	A			
Caustic Potash	25	20	68	A	A	A	A	A	X	A	B
		40	104	A	A	A	A	A		A	B
		60	140	A	A	A	B	A		A	C
		80	176		B	A	C	A		A	X
		100	212			B	X	A		B	
		120	248								
Cellosolve		20	68			A	A	A	C	B	C
		40	104			A	A	A	X		X
		60	140				B	A			
		80	176				C	A			
		100	212				X	A			
		120	248								

Chemicals	Concentration (%)	Temp. °C	Temp. °F	PVC	CPVC	PP	PVDF	TEFLON	VITON	EPT	NITRILE
Chloramine		20	68				X				
		40	104								
		60	140								
		80	176								
		100	212								
		120	248								
Chloric Acid	20	20	68	A			A	A			
		40	104	A			A	A			
		60	140	B			A	A			
		80	176				A				
		100	212								
		120	248								
Chlorinated Solvents		20	68					A	B	X	X
		40	104					A			
		60	140					A			
		80	176					A			
		100	212					A			
		120	248								
Chlorine Dioxide	Pure	20	68	A	A	C	A	A	X		
		40	104	B	B	X	A	A			
		60	140	B	B		A	A			
		80	176								
		100	212								
		120	248								
Chlorine Gas	Wet	20	68	A	A	X	A	A	X	X	X
		40	104	B	A		A	A			
		60	140	B	B		A	A			
		80	176		C		A	A			
		100	212		X		A	A			
		120	248				A	A			
Chlorine Gas	Dry	20	68	A	A	C	A	A	B	B	X
		40	104	A	A		A	A	C	X	
		60	140	A	A		A	A	X		
		80	176		B		A	A			
		100	212				A	A			
		120	248				A	A			
Chlorine Water	400 ppm	20	68	A	A	C	A	A	C	B	X
		40	104	A	A	X	A	A	X	C	
		60	140	B	B		A	A			
		80	176		B		A	A			
		100	212		C		A	A			
		120	248				A	A			
Chlorobenzene	Pure	20	68			B	A	A	A	X	X
		40	104			C	A	A			
		60	140				B	A			
		80	176				C	A			
		100	212				C	A			
		120	248								
Chloroform	Pure	20	68	X	X	B	A	A	B	X	X
		40	104			X	A	A			
		60	140				B	A			
		80	176				C	A			
		100	212				C	A			
		120	248								
Chloro-Sulfonic Acid	Pure	20	68	X	X	X	C	A	X	X	X
		40	104				X	A			
		60	140					A			
		80	176					A			
		100	212								
		120	248								
Chromic Acid	10	20	68	A	A	X	A	A	A	B	X
		40	104	A	A		A	A	B	C	
		60	140	A	A		A	A	B	X	
		80	176	X	B		A	A	B		
		100	212		X		A	A	X		
		120	248				A	A			

Chemicals	Concentration (%)	Temp. °C	Temp. °F	PVC	CPVC	PP	PVDF	TEFLON	VITON	EPT	NITRILE
Chromic Acid	20	20	68	A	A	X	A	A	B	B	X
		40	104	A	A		A	A	B	X	
		60	140	B	A		A	A	B		
		80	176		B		A	A	C		
		100	212				A	A	X		
		120	248				A	A			
Chromic Acid	40	20	68	B	B	X	A	A	X	X	X
		40	104	C	C		A	A			
		60	140	X	X		A	A			
		80	176				A	A			
		100	212				B	A			
		120	248				C	A			
Chromic Acid	50	20	68	C	C	X	A	A	X	X	X
		40	104	X	X		A	A			
		60	140				B	A			
		80	176				C	A			
		100	212				X	A			
		120	248					X			
Chromium Alum	Satu	20	68	A	A	A	A	A	A	A	A
		40	104			A	A	A	A	A	A
		60	140			A	A	A	A	A	A
		80	176				A	A	A	B	B
		100	212				A	A	A	B	B
		120	248								
Citric Acid	10	20	68	A	A	A	A	A	A	A	A
		40	104	A	A	A	A	A	A	A	A
		60	140	B	B	B	A	A	A	A	A
		80	176		B		A	A	A	A	A
		100	212				A	A	A	B	B
		120	248								
Coconut Oil		20	68	A	A	A	A	A	A	B	A
		40	104	A	A	A	A	A	A	B	A
		60	140	A	A	A	A	A	A		
		80	176		A	A	A	A			
		100	212				A	A			
		120	248				A	A			
Coke Oven Gas		20	68				A	A	A	A	B
		40	104				A	A	A	A	C
		60	140				A	A	A		
		80	176				A	A			
		100	212				A	A			
		120	248				A	A			
Copper Acetate	Satu	20	68	A	A	A	A	A	A	A	A
		40	104				A	A	A	A	
		60	140				A	A	A		
		80	176				A	A			
		100	212				A	A			
		120	248				A	A			
Copper Borofluoride		20	68	A	A	A	A	A	A	A	A
		40	104				A	A		A	
		60	140				A	A		A	
		80	176				A	A		A	
		100	212				A	A		B	
		120	248				A	A			
Copper Carbonate	Satu	20	68	A	A	A	A	A			
		40	104				A	A			
		60	140				A	A			
		80	176				A	A			
		100	212				A	A			
		120	248				A	A			
Copper Chloride	Satu	20	68	A	A	A	A	A	A	A	A
		40	104	A	A	A	A	A	A	A	A
		60	140	A	A	A	A	A	A	A	A
		80	176		A	A	A	A	A	A	A
		100	212				A	A	A	B	B
		120	248				A	A			

Chemicals	Concentration (%)	Temp. °C	Temp. °F	PVC	CPVC	PP	PVDF	TEFLON	VITON	EPT	NITRILE
Copper Cyanide	Satu	20	68	A	A	A	A	A			
		40	104			A	A	A			
		60	140			A	A	A			
		80	176			B	A	A			
		100	212				B	A			
		120	248				C				
Copper Fluoride	Satu	20	68	A	A	A	A	A			
		40	104	A	A	A	A	A			
		60	140	B	B	B	A	A			
		80	176				A	A			
		100	212				A	A			
		120	248				B				
Copper Nitrate		20	68	A	A	A	A	A	A	A	A
		40	104	A	A	A	A	A	A	A	A
		60	140	B	B	A	A	A	A	A	A
		80	176			B	A	A	A	A	B
		100	212				A	A	A		
		120	248								
Copper Sulfate	Satu	20	68	A	A	A	A	A	A	A	A
		40	104	A	A	A	A	A	A	A	A
		60	140	A	A	A	A	A	A	A	A
		80	176		A	A	A	A	A	A	A
		100	212				A	A	A	B	B
		120	248								
Corn Oil		20	68	A	A	A	A	A	A	B	A
		40	104			A	A	A	A	B	A
		60	140				A	A	A		A
		80	176				A	A			
		100	212				A	A			
		120	248				A	A			
Corn Syrup		20	68	A	A	A	A	A	A	A	A
		40	104	A	A	A	A	A	A	A	A
		60	140	A	A	A	A	A	A	A	A
		80	176				A	A	A	A	B
		100	212				A	A	A		
		120	248				A				
Cottonseed Oil		20	68			A	A	A	A	A	A
		40	104			A	A	A	A	B	A
		60	140			A	A	A	A	B	A
		80	176			B	A	A	B	C	A
		100	212			C	A	A	B		B
		120	248				A	A			
Creosote		20	68	X	X			A	A	X	A
		40	104					A			
		60	140					A			
		80	176					A			
		100	212					A			
		120	248					A			
Cresol	Pure	20	68	C	X	C	A	A	A	X	X
		40	104	C			A	A	A		
		60	140	C			B	A	B		
		80	176	X			B	A			
		100	212				C	A			
		120	248								
Croton Aldehyde	Pure	20	68				A	A	A	B	C
		40	104				A	A			
		60	140				B	A			
		80	176				B	A			
		100	212				C	A			
		120	248								
Crude Oil		20	68	A	A		A	A	A	X	B
		40	104	A	A		A	A			
		60	104	B	B		A	A			
		80	176				A	A			
		100	212				A	A			
		120	248				A	A			

Chemicals	Concentration (%)	Temp. °C	Temp. °F	PVC	CPVC	PP	PVDF	TEFLON	VITON	EPT	NITRILE
Cryolite		20	68	B	B	A	A	A			
		40	104	B	B	A	A	A			
		60	140	B	C	A	A	A			
		80	176		C	A	A	A			
		100	212				A	A			
		120	248				A	A			
Cupric Fluoride	Satu	20	68	A	A	A	A	A	A	A	A
		40	104	A	A	A	A	A	A	A	
		60	140	A	A	A	A	A	A	A	
		80	176			B	A	A			
		100	212				A	A			
		120	248				A	A			
Cupric Sulfate	Satu	20	68	A	A	A	A	A	A	A	A
		40	104	A	A	A	A	A	A	A	A
		60	140	A	A	A	A	A	A	A	A
		80	176		A	A	A	A	A	A	A
		100	212		A		A	A	A	B	B
		120	248								
Cuprous Chloride	Satu	20	68	A	A	A	A	A	A	A	A
		40	104	A	A	A	A	A	A	A	A
		60	140	A	A	A	A	A	A	A	A
		80	176		A	A	A	A	A	A	A
		100	212		B		A	A	A	B	B
		120	248				A	A			
Cyclohexane	Pure	20	68	X	X	C	A	A	A	X	B
		40	104			X	A	A	A		
		60	140				A	A			
		80	176				A	A			
		100	212				A	A			
		120	248				C	A			
Cyclohexanol	Pure	20	68	X	X	A	A	A	A	B	C
		40	104			B	A	A	A		
		60	140			C	A	A			
		80	176			X	A	A			
		100	212				B	A			
		120	248								
Cyclohex-anone	Pure	20	68	X	X	B	B	A	X	X	X
		40	104			C	C	A			
		60	140			X	C	A			
		80	176				X	A			
		100	212					A			
		120	248								
Decalin	Pure	20	68					A	A	X	X
		40	104					A			
		60	140					A			
		80	176					A			
		100	212					A			
		120	248								
Decane	Pure	20	68				A	A		X	X
		40	104				A	A			
		60	140				A	A			
		80	176				A	A			
		100	212				A	A			
		120	248				A	A			
Dextrin	Satu	20	68	A	A	A	A	A	A	A	A
		40	104	A	A	A	A	A	A	A	A
		60	140	A	A	A	A	A	A	A	A
		80	176		A	A	A	A	A	A	B
		100	212				A	A	A		
		120	248				A				
Dextrose		20	68	A	A	A	A	A	A	A	A
		40	104	A	A	A	A	A	A	A	A
		60	140	A	A	A	A	A	A	A	A
		80	176		A	A	A	A	A	A	B
		100	212				A	A	A		
		120	248				A				

Chemicals	Concentration (%)	Temp. °C	Temp. °F	PVC	CPVC	PP	PVDF	TEFLON	VITON	EPT	NITRILE
Diacetone	Pure	20	68	X	X		X				
		40	104								
		60	140								
		80	176								
		100	212								
		120	248								
Diacetone Alcohol	Pure	20	68			A	A	A	X	A	X
		40	104			A	B	A			
		60	140				C	A			
		80	176				X	A			
		100	212					A			
		120	248								
Dibenzyl Ether	Pure	20	68				A	A		C	X
		40	104				B	A			
		60	140				C	A			
		80	176				X	A			
		100	212					A			
		120	248					A			
Dibutyl Amine	Pure	20	68				A	A			
		40	104				C	A			
		60	140				X	A			
		80	176					A			
		100	212								
		120	248								
Dibutyl Ether	Pure	20	68				A		X	X	B
		40	104				B				
		60	140				C				
		80	176				X				
		100	212								
		120	248								
Dibutyl Phthalate	Pure	20	68				A	A	B	A	X
		40	104				B	A		A	
		60	140				C	A			
		80	176				X	A			
		100	212					A			
		120	248					A			
Dibutyl Sebacate		20	68				A	A	C	B	X
		40	104				B	A			
		60	140				C	A			
		80	176				X	A			
		100	212					A			
		120	248					A			
Dichloro-benzene	Pure	20	68				A	A	B	X	X
		40	104				A	A			
		60	140				A	A			
		80	176				B	A			
		100	212				C	A			
		120	248					A			
Dichloro-ethylene		20	68				A	A	A	X	X
		40	104				A	A			
		60	140				A	A			
		80	176				A	A			
		100	212				A	A			
		120	248				B	A			
Dichloro-isopropylether	Pure	20	68				A				
		40	104				B				
		60	140				C				
		80	176				X				
		100	212								
		120	248								
Diesel Fuels		20	68				A	A			
		40	104				A	A			
		60	140				A	A			
		80	176				A	A			
		100	212				A	A			
		120	248				A	A			

Chemicals	Concentration (%)	Temp. °C	Temp. °F	PVC	CPVC	PP	PVDF	TEFLON	VITON	EPT	NITRILE
Diethylamine	Pure	20	68	X	X	A	B	A		A	X
		40	104			B	C	A			
		60	140				X	A			
		80	176					A			
		100	212					A			
		120	248								
Diethylene-triamine		20	68				A				
		40	104				B				
		60	140				C				
		80	176				X				
		100	212								
		120	248								
Diethyl Ether	Pure	20	68	X	X	C	A	A	C	C	C
		40	104			X	B	A			
		60	140				C	A			
		80	176				X	A			
		100	212					A			
		120	248								
Diglycolic Acid	Satu	20	68	A		A	A	A	A	A	A
		40	104	A				A			
		60	140					A			
		80	176					A			
		100	212					A			
		120	248								
Diisobutyl Ketone	Pure	20	68				A		X	X	B
		40	104				A				
		60	140				B				
		80	176				C				
		100	212								
		120	248								
Diisobutylene	Pure	20	68				A	A	A	X	A
		40	104				A	A	A		
		60	140				A	A	A		
		80	176				B	A			
		100	212				C	A			
		120	248				X	A			
Diisopropyl Ketone	Pure	20	68				X	A	X	B	X
		40	104				X				
		60	140								
		80	176								
		100	212								
		120	248								
Dimethyl Amine	Pure	20	68	X	X	A	B	A	X	A	X
		40	104			B	C	A			
		60	140				X	A			
		80	176								
		100	212								
		120	248								
Dimethyl-aniline	Pure	20	68				B			X	X
		40	104				C				
		60	140				X				
		80	176								
		100	212								
		120	248								
Dimethyl-formamide	Pure	20	68	X	X	A	X	A	X	B	
		40	104			A		A			
		60	140					A			
		80	176					A			
		100	212					A			
		120	248								
Dimethyl Phthalate		20	68				B	A	B	B	
		40	104				C	A			
		60	140				X				
		80	176								
		100	212								
		120	248								

Chemicals	Concentration (%)	Temp. °C	Temp. °F	PVC	CPVC	PP	PVDF	TEFLON	VITON	EPT	NITRILE
Dioctyl Phthalate		20	68				A	A	A	A	B
		40	104				B	A			
		60	140				C	A			
		80	176				X	A			
		100	212					A			
		120	248								
Dioxane	Pure	20	68			B	C		X	X	X
		40	104			C	C				
		60	140				X				
		80	176								
		100	212								
		120	248								
Dioxolane		20	68				X		X	X	X
		40	104								
		60	140								
		80	176								
		100	212								
		120	248								
Diphenyl Oxide	Satu	20	68						A		X
		40	104								
		60	140								
		80	176								
		100	212								
		120	248								
Disodium Phosphate		20	68	A	A		A	A			
		40	104	A	A		A	A			
		60	140	A	A		A	A			
		80	176		A		A	A			
		100	212		A		A	A			
		120	248				A	A			
Epichloro-hydrin	Pure	20	68	X	X	A	C	A	X	X	X
		40	104			A	X	A			
		60	140								
		80	176								
		100	212								
		120	248								
Epsom Salt	Satu	20	68				A	A	A	A	A
		40	104				A	A	A	A	
		60	140				A	A	A	A	
		80	176				A	A	A		
		100	212					A			
		120	248					A			
Esters		20	68				A	A			
		40	104				B	A			
		60	140				C	A			
		80	176				X	A			
		100	212								
		120	248								
Ethanolamine	Pure	20	68	X	X		X	A		A	A
		40	104					A			
		60	140								
		80	176								
		100	212								
		120	248								
Ethers		20	68	X	X	C	A				
		40	104			C	B				
		60	140			X					
		80	176								
		100	212								
		120	248								
Ethyl Acetate	Pure	20	68			B	A	A	X	B	X
		40	104			B	B	A			
		60	140			C	C	A			
		80	176				X	A			
		100	212					A			
		120	248								

Chemicals	Concentration (%)	Temp. °C	Temp. °F	PVC	CPVC	PP	PVDF	TEFLON	VITON	EPT	NITRILE
Ethyl Acetoacetate	Pure	20	68				A	A	X	A	X
		40	104				B	A		A	
		60	140				C	A			
		80	176				X	A			
		100	212					A			
		120	248								
Ethyl Acrylate	Pure	20	68				A	A	X	B	X
		40	104				B	A			
		60	140				C	A			
		80	176				X	A			
		100	212					A			
		120	248					A			
Ethyl Alcohol	Pure	20	68	A	A	A	A	A	A	A	A
		40	104	A	B	A	A	A	A	A	A
		60	140	B	B	B	A	A	A	A	A
		80	176		C	B	A	A	A	A	B
		100	212				A	A			
		120	248				A	A			
Ethyl Benzene		20	68				A	A	A	X	C
		40	104				A	A			
		60	140				A	A			
		80	176					A			
		100	212					A			
		120	248					A			
Ethyl Chloride		20	68			C	A	A	A	A	B
		40	104			X	A	A	A	A	
		60	140				A	A	A		
		80	176				A	A	B		
		100	212				A	A			
		120	248				A	A			
Ethyl Ether	Pure	20	68				A	A	C	C	B
		40	104				B	A			
		60	140					A			
		80	176					A			
		100	212					A			
		120	248					A			
Ethyl Formate	Pure	20	68						X	B	X
		40	104								
		60	140								
		80	176								
		100	212								
		120	248								
Ethyl Hexanol		20	68				A	A			X
		40	104				A	A			
		60	140				B	A			
		80	176					A			
		100	212					A			
		120	248				A	A			
Ethyl Mercaptan	Pure	20	68						A	A	X
		40	104						A	A	
		60	140						A		
		80	176								
		100	212								
		120	248								
Ethyl Oxalate		20	68						X	A	X
		40	104								
		60	140								
		80	176								
		100	212								
		120	248								
Ethylene Bromide	Pure	20	68				A	A	C	B	X
		40	104				A	A			
		60	140				A	A			
		80	176				A	A			
		100	212				A	A			
		120	248				A	A			

Chemicals	Concentration (%)	Temp. °C	Temp. °F	PVC	CPVC	PP	PVDF	TEFLON	VITON	EPT	NITRILE
Ethylene Chloride		20	68			B	A	A	A	X	X
		40	104			X	A	A			
		60	140				A	A			
		80	176				A	A			
		100	212				B	A			
		120	248				B	A			
Ethylene Chlorohydrin	Pure	20	68			A	A	A	X	A	X
		40	104				B	A			
		60	140				C	A			
		80	176				X	A			
		100	212					A			
		120	248								
Ethylene Diamine	Pure	20	68				B	A		A	A
		40	104				X	A			
		60	140					A			
		80	176					A			
		100	212					A			
		120	248								
Ethylene Dichloride	Pure	20	68			B	A	A	A	X	X
		40	104			X	A	A			
		60	140				A	A			
		80	176				A	A			
		100	212				B	A			
		120	248				B	A			
Ethylene Glycol	Pure	20	68	A	A	A	A	A	A	A	A
		40	104	A	A	A	A	A	A	A	A
		60	140	A	A	A	A	A	A	A	A
		80	176		B	B	B	A	A	A	A
		100	212				C	A	A	B	B
		120	248					A			
Ethylene Oxide		20	68				A	A	X	X	X
		40	104				B	A			
		60	140				C	A			
		80	176				X				
		100	212								
		120	248								
Fatty Acids		20	68	A	B	A	A	A	A	X	A
		40	104	A	B	B	A	A			
		60	140	A	B	B	A	A			
		80	176			C	A	A			
		100	212				A	A			
		120	248				A	A			
Ferrous Chloride	Satu	20	68	A	A	A	A	A	A	A	A
		40	104	A	A	A	A	A	A	A	A
		60	140	B	A	A	A	A	A	A	A
		80	176		A	A	A	A	A	A	B
		100	212		B	B	A	A	B	B	
		120	248				A	A			
Ferric Hydroxide	Satu	20	68	A	A	A	A	A	A	A	A
		40	104	A	A	A	A	A	A	A	A
		60	140	A	A	A	A	A	A	A	A
		80	176		A	A	A	A	A	A	B
		100	212				A	A			
		120	248				A	A			
Ferric Nitrate	Satu	20	68	A	A	A	A	A	A	A	A
		40	104	A	A	A	A	A	A	A	A
		60	140	A	A	A	A	A	A	A	A
		80	176		A	B	A	A	A	A	B
		100	212				A	A	A		
		120	248				A	A			
Ferric Sulfide		20	68	A	A	A	A	A	A	A	A
		40	104	A	A	A	A	A	A	A	A
		60	140	A	A	A	A	A	A	A	A
		80	176				A	A	A	A	B
		100	212				A	A			
		120	248				A	A			

Chemicals	Concentration (%)	Temp. °C	Temp. °F	PVC	CPVC	PP	PVDF	TEFLON	VITON	EPT	NITRILE
Ferric Chloride	Satu	20	68	A	A	A	A	A	A	A	A
		40	104	A	A	A	A	A	A	A	A
		60	140	B	A	A	A	A	A	A	A
		80	176		A	A	A	A	A	A	B
		100	212				A	A	B	B	
		120	248				A	A			
Ferrous Hydroxide	Satu	20	68	A	A	A	A	A	A	A	A
		40	104	A	A	A	A	A	A	A	A
		60	140	A	A	A	A	A	A	A	A
		80	176		A	A	A	A	A	A	B
		100	212				A	A	A		
		120	248				A	A			
Ferrous Nitrate	Satu	20	68	A	A	A	A	A	A	A	A
		40	104	A	A	A	A	A	A	A	A
		60	140	A	A	A	A	A	A	A	A
		80	176		A	A	A	A	A	A	B
		100	212				A	A	A		
		120	248				A	A			
Ferrous Sulfate		20	68	A	A	A	A	A	A	A	A
		40	104	A	A	A	A	A	A	A	A
		60	140	A	A	A	A	A	A	A	A
		80	176		A	A	A	A	A	A	B
		100	212				A	A	B	B	
		120	248				A	A			
Fluoboric Acid	Pure	20	68	A	A	A	A	A	A	A	B
		40	104	A	A	A	A	A	A	A	
		60	140	B	A	A	A	A	A	A	
		80	176		B	B	A	A	A	B	
		100	212				A	A			
		120	248				A	A			
Fluorine Gas	Wet	20	68	A	A	A	A	A	A	A	
		40	104	B	B	B	A	A	A	A	
		60	140	B	B	B	A	A	B	B	
		80	176				A	A			
		100	212				A	A			
		120	248				A	A			
Fluosilicic Acid	50	20	68	B	A	A	A	A	A	A	A
		40	104	B	A	A	A	A	A	A	B
		60	140	B	A	A	A	A	A	A	B
		80	176		B	B	A	A	A	B	B
		100	212				A	A	A	B	B
		120	248				A	A			
Formaldehyde	35	20	68	A	A	A	A	A	A	A	B
		40	104	A	A	A	A	A	A	A	B
		60	140	C	A	A	B	A	A	A	B
		80	176		A	A	X	A	A	A	B
		100	212					A			
		120	248					A			
Formaldehyde	37	20	68	A	A	A	A	A	A	A	B
		40	104	A	A	A	A	A	A	A	B
		60	140	C	A	A	B	A	A	A	B
		80	176		A	A	X	A	A	A	B
		100	212					A			
		120	248					A			
Formaldehyde	50	20	68				A	A	B	A	X
		40	104				A	A			
		60	140				B	A			
		80	176				X	A			
		100	212					A			
		120	248					A			
Formic Acid	90	20	68	A	A	A	A	A	X	A	X
		40	104	B	B	B	A	A		A	
		60	140	X	X	X	A	A		A	
		80	176				A	A		A	
		100	212				B	A		B	
		120	248				C	A			

Chemicals	Concentration (%)	Temp. °C	Temp. °F	PVC	CPVC	PP	PVDF	TEFLON	VITON	EPT	NITRILE
Freon F-11		20	68	A			A	A	B	C	X
		40	104	A			A	A			
		60	140	A			A	A			
		80	176				A	A			
		100	212				A	A			
		120	248				A	A			
Freon F-12		20	68	A			A	A	B	B	C
		40	104	A			A	A			
		60	140	A			A	A			
		80	176				A	A			
		100	212				A	A			
		120	248				A	A			
Freon F-21		20	68	X	X		A	A	C	C	X
		40	104				A	A	X		
		60	140				A	A			
		80	176				A	A			
		100	212				A	A			
		120	248				A	A			
Freon F-22		20	68	X	X		A	A	X	B	X
		40	104				A	A			
		60	140				A	A			
		80	176				A	A			
		100	212				A	A			
		120	248				A	A			
Freon F-113		20	68	B			A	A	B	X	X
		40	104				A	A			
		60	140				A	A			
		80	176				A	A			
		100	212				A	A			
		120	248				A	A			
Freon F-114		20	68	B			A	A	A	C	B
		40	104				A	A	A		
		60	140				A	A			
		80	176				A	A			
		100	212				A	A			
		120	248				A	A			
Fructose		20	68	A	A		A	A	A	A	A
		40	104	A	A		A	A	A	A	A
		60	140	A	A		A	A	A	A	A
		80	176				A	A	A	A	B
		100	212				A	A	A		
		120	248				A	A			
Fruit Juice	Pure	20	68				A	A			
		40	104				A	A			
		60	140				A	A			
		80	176				A	A			
		100	212				A	A			
		120	248				A	A			
Furane		20	68				X		X	X	X
		40	104								
		60	140								
		80	176								
		100	212								
		120	248								
Furfural	Pure	20	68			C	A	A	B	A	X
		40	104			X	B	A	B	A	
		60	140				B	A	C	A	
		80	176				X	A		B	
		100	212					A		X	
		120	248					A			
Furfuryl Alcohol	Pure	20	68				B	A	X	C	X
		40	104				B	A			
		60	140				C	A			
		80	176				X				
		100	212								
		120	248								

Chemicals	Concentration (%)	Temp. °C	Temp. °F	PVC	CPVC	PP	PVDF	TEFLON	VITON	EPT	NITRILE
Gallic Acid		20	68				A	A	A	A	A
		40	104				B	A			
		60	140				C	A			
		80	176				X	A			
		100	212					A			
		120	248					A			
Gas Natural Gas		20	68	A			A	A	A	X	A
		40	104	A			A	A			
		60	140	A			A	A			
		80	176				A	A			
		100	212				A	A			
		120	248				A	A			
Gasoline Leaded		20	68	A		X	A	A	B	X	B
		40	104	A			A	A	B		B
		60	104	B			A	A	B		B
		80	176				A	A			
		100	212				A	A			
		120	248				A	A			
Gasoline Unleaded		20	68	A		X	A	A	B	X	B
		40	104	A			A	A	B		B
		60	140	B			A	A	B		B
		80	176				A	A			
		100	212				A	A			
		120	248				A	A			
Gasoline Sour		20	68	A		X	A	A	A	X	B
		40	104	A			A	A			
		60	140	B			A	A			
		80	176				A	A			
		100	212				A	A			
		120	248				A	A			
Gelatin		20	68	A	A	A	A	A	A	A	A
		40	104	A	A	A	A	A	A	A	A
		60	140	A	A	A	A	A	A	A	A
		80	176		A	A	A	A	A	A	B
		100	212				A	A	A		
		120	248				A	A			
Gin		20	68	A	A	A	A	A	A	A	A
		40	104	A	A	A	A	A	A	A	A
		60	140	B	B	A	A	A	A	A	A
		80	176		B	B	A	A	A	A	A
		100	212				A	A	A		
		120	248				A	A			
Glucose		20	68	A	A	A	A	A	A	A	A
		40	104	A	A	A	A	A	A	A	A
		60	140	A	A	A	A	A	A	A	A
		80	176			A	A	A	A	A	A
		100	212			B	A	A			
		120	248				A	A			
Glue		20	68				A	A	A	A	A
		40	104				A	A	A	A	A
		60	140				A	A	A	A	A
		80	176				A	A	A	A	B
		100	212				A	A	A		
		120	248				A	A			
Glycerol (Glycerine)	Pure	20	68	A	A	A	A	A	A	A	A
		40	104	A	A	A	A	A	A	A	A
		60	140	A	A	A	A	A	A	A	
		80	176			A	A	A	A	A	
		100	212				A	A			
		120	248				A	A			
Glycolic Acid	Satu	20	68			A	A	A	A	A	A
		40	104			A	B	A			
		60	140			A	C	A			
		80	176				X	A			
		100	212					A			
		120	248								

Chemicals	Concentration (%)	Temp. °C	Temp. °F	PVC	CPVC	PP	PVDF	TEFLON	VITON	EPT	NITRILE
Glycols		20	68				A	A	A	A	A
		40	104				A	A			
		60	140				A	A			
		80	176				A	A			
		100	212				A	A			
		120	248				A	A			
Grape Sugar		20	68	A	A	A	A	A	A	A	A
		40	104	A	A	A	A	A	A	A	A
		60	140	A	A	A	A	A	A	A	A
		80	176				A	A	A	A	B
		100	212				A	A	A		
		120	248				A	A			
Heptane		20	68	A		B	A	A	A	X	A
		40	104	A		B	A	A	A		
		60	140	A		C	A	A	A		
		80	176				A	A			
		100	212				A	A			
		120	248				A	A			
Hexane		20	68	A		B	A	A	A	X	A
		40	104	B		B	A	A			
		60	140			C	A	A			
		80	176				A	A			
		100	212				A	A			
		120	248				A	A			
Hexyl Alcohol	Pure	20	68	A	A	A	A	A	A	B	A
		40	104	A			A	A	A	B	A
		60	140	B			A	A	A	C	B
		80	176				B	A	A	X	
		100	212				C	A	A		
		120	248				X	A	B		
Hydrazine	Pure	20	68	X	X	C	C	A	X	A	A
		40	104			X	C	A			
		60	140				X	A			
		80	176					A			
		100	212					A			
		120	248								
Hydrobomic Acid	20	20	68	A	A	A	A	A	A	A	C
		40	104	A	A	A	A	A	A	A	C
		60	140	B	A	A	A	A	A	A	X
		80	176		A	A	A	A	B	B	
		100	212				A	A			
		120	248				A	A			
Hydrobromic Acid	50	20	68	A	A	A	A	A	A	A	C
		40	104	A	A	A	A	A	A	A	X
		60	140	B	A	A	A	A			
		80	176		B	A	A	A			
		100	212				A	A			
		120	248				A	A			
Hydrochloric Acid	25	20	68	A	A	A	A	A	A	A	C
		40	104	A	A	A	A	A	A	A	X
		60	140	A	A	A	A	A	A	A	
		80	176		A	A	A	A	B	X	
		100	212		B	C	A	A	C	X	
		120	248				A	A			
Hydrochloric Acid	35	20	68	A	A	A	A	A	B	B	C
		40	104	A	A	A	A	A	B	B	X
		60	140	B	A	A	A	A	X	X	
		80	176		B	B	A	A			
		100	212		B	C	B	A			
		120	248				B	A			
Hydrochloric Acid	38	20	68	A	A	A	A	A	B	C	C
		40	104	A	A	A	A	A	B	C	X
		60	140	B	B	A	A	A	X	X	
		80	176		B	B	A	B			
		100	212		X	X	B	B			
		120	248				C	B			

Chemicals	Concentration (%)	Temp. °C	Temp. °F	PVC	CPVC	PP	PVDF	TEFLON	VITON	EPT	NITRILE
Hydrocyanic Acid		20	68	A	A	A	A	A	B	B	B
		40	104	A	A	A	A	A			
		60	140	A	A	A	A	A			
		80	176				A	A			
		100	212				A	A			
		120	248				A	A			
Hydrofluoric Acid	Dilute	20	68	A	A	A	A	A	A	A	X
		40	104	A	B	B	A	A	A	A	
		60	140	C	B	B	A	A	A	A	
		80	176		C	B	A	A	A	A	
		100	212			B	A	A	A	A	
		120	248				A	A	B		
Hydrofluoric Acid	30	20	68	A	A	A	A	A	A	A	X
		40	104	B	B	B	A	A	A	A	
		60	140	C	C	B	A	A	A	A	
		80	176	X	X	B	A	A	A	B	
		100	212			C	A	A	A	X	
		120	248				A	A			
Hydrofluoric Acid	40	20	68	B	B	A	A	A	A	A	
		40	104	C	C	B	A	A	A	B	
		60	140	X	X	B	A	A	A	C	
		80	176			B	A	A	A	X	
		100	212			C	A	A	B		
		120	248				B	A			
Hydrofluoric Acid	50	20	68	B	B	A	A	A	A	A	X
		40	104	C	X	B	A	A	A	A	
		60	140	X		B	A	A	A	B	
		80	176			B	A	A	A	C	
		100	212				A	A	B	X	
		120	248				B	A	C		
Hydrogen		20	68	A	A	A	A	A	A	A	A
		40	104	A	A	A	A	A	A	A	A
		60	140	A	A	A	A	A	A	A	A
		80	176				A	A			
		100	212				B	A			
		120	248					A			
Hydrogen Fluoride Anhydrous		20	68				A	A	X	B	X
		40	104				A	A			
		60	140				A	A			
		80	176				A	A			
		100	212				A	A			
		120	248				A	A			
Hydrogen Peroxide	5	20	68	A	X	A	A	A	A	A	X
		40	104	A		A	A	A	A	B	
		60	140	B		A	A	A	A	B	
		80	176			B	A	A	A	C	
		100	212				A	A			
		120	248				A	A			
Hydrogen Peroxide	50	20	68	B	X	C	A	A	A	C	X
		40	104	C		X	A	A	B		
		60	140				A	A			
		80	176				A	A			
		100	212				A	A			
		120	248				B	A			
Hydrogen Peroxide	90	20	68				A	A	A	X	X
		40	104					A			
		60	140					A			
		80	176					A			
		100	212					A			
		120	248					A			
Hydrogen Sulfide	Dry	20	68	A	A	A	A	A	A	A	A
		40	104	A	A	A	A	A	A	A	A
		60	140	A	A	A	A	A	A	A	A
		80	176		A	A	A	A	A	B	B
		100	212		B	A	A	A		B	B
		120	248				A	A			

Chemicals	Concentration (%)	Temp. °C	Temp. °F	PVC	CPVC	PP	PVDF	TEFLON	VITON	EPT	NITRILE
Hydrogen Sulfide Aqueous		20	68	A	A	A	A	A	A	A	A
		40	104	A	A	A	A	A	A	A	A
		60	140	A	A	A	A	A	B	A	A
		80	176		A	A	A	A		A	A
		100	212		B	B	A	A		B	B
		120	248				A	A			
Hydroquinone	Satu	20	68	A			A	A	A	A	A
		40	104	A			A	A	A		
		60	140	A			A	A			
		80	176				A	A			
		100	212				A	A			
		120	248				A	A			
Hypochlorous Acid	10	20	68	A	A	A	A	A	A	A	C
		40	104	A	A	B	A	A	B	B	
		60	140	A	A	B	A	A			
		80	176		B		A	A			
		100	212				A	A			
		120	248				B	A			
Iodine		20	68	B	B	A	A	A	B	X	
		40	104	C	B	A	A	A			
		60	140		C	A	A	A			
		80	176			A	A	A			
		100	212				A	A			
		120	248				A	A			
Iodine Solution	10	20	68	A			A	A			
		40	104	A			A	A			
		60	140				A	A			
		80	176				A	A			
		100	212				A	A			
		120	248				A	A			
Isobutyl Alcohol	Pure	20	68				A	A	A	A	B
		40	104				A	A			
		60	140				A	A			
		80	176				A	A			
		100	212				A	A			
		120	248				A	A			
Iso-octane		20	68				A	A	A	X	A
		40	104				A	A			
		60	140				A	A			
		80	176				A	A			
		100	212				A	A			
		120	248				A	A			
Isophorone	Pure	20	68						X	X	X
		40	104								
		60	140								
		80	176								
		100	212								
		120	248								
Isopropyl Acetate	Pure	20	68					A	X	B	X
		40	104					A			
		60	140					A			
		80	176					A			
		100	212					A			
		120	248								
Isopropyl Alcohol	Pure	20	68	A	A	A	A	A	A	A	A
		40	104	A	A	A	A	A	A	A	B
		60	140	A	A	A	A	A	A	A	
		80	176				A	A	A		
		100	212				B	A	B		
		120	248				B	A			
Isopropyl Chloride		20	68				A	A	A	X	B
		40	104				B	A			
		60	140				C	A			
		80	176				X	A			
		100	212					A			
		120	248								

Chemicals	Concentration (%)	Temp. °C	Temp. °F	PVC	CPVC	PP	PVDF	TEFLON	VITON	EPT	NITRILE
Isopropyl Ether	Pure	20	68				A	A	C	C	A
		40	104				B	A			
		60	140				C	A			
		80	176				X				
		100	212								
		120	248								
Jet Fuel JP-4		20	68				A	A	A	X	B
		40	104				A	A			
		60	140				A	A			
		80	176				A	A			
		100	212				A	A			
		120	248				A	A			
Jet Fuel JP-5		20	68				A	A	A	X	A
		40	104				A	A			
		60	140				A	A			
		80	176				A	A			
		100	212				A	A			
		120	248				A	A			
Kerosene		20	68	A	A	A	A	A	A	X	A
		40	104	A	A	B	A	A			
		60	140	A	A	C	A	A			
		80	176				A	A			
		100	212				A	A			
		120	248				A	A			
Lacquer		20	68						X	X	X
		40	104								
		60	140								
		80	176								
		100	212								
		120	248								
Lactic Acid	25	20	68	A	A	A	A	A	A	A	A
		40	104	A	A	A	A	A	A	A	B
		60	140	B	A	A	A	A	A	A	C
		80	176		B	A	A	A	A	A	
		100	212				A	A	A	A	
		120	248				A	A			
Lactic Acid	80	20	68	A	A	A	A	A	A	A	A
		40	104	B	A	A	A	A	A	A	B
		60	140	B	B	A	A	A	A	A	C
		80	176			B	A	A	A	A	
		100	212				A	A	B	B	
		120	248				A	A			
Lard Oil		20	68			A	A	A	A	A	A
		40	104				A	A	A	A	A
		60	140				A	A	A	A	A
		80	176				A	A			
		100	212				A	A			
		120	248				A	A			
Lauric Acid		20	68				A	A			
		40	104				A	A			
		60	140				A	A			
		80	176				A	A			
		100	212				A	A			
		120	248				A	A			
Lauroyl Chloride	Pure	20	68				A	A			
		40	104				A	A			
		60	140				A	A			
		80	176				A	A			
		100	212				A	A			
		120	248				A	A			
Lead Acetate	Satu	20	68	A	A	A	A	A	A	A	A
		40	104	A	A	A	A	A	A	A	A
		60	140	A	A	A	A	A	B	A	A
		80	176		A	A	A	A	B	A	B
		100	212				A	A			
		120	248				A	A			

Chemicals	Concentration (%)	Temp. °C	Temp. °F	PVC	CPVC	PP	PVDF	TEFLON	VITON	EPT	NITRILE
Lead Chloride		20	68	A	A	A	A	A	A	A	A
		40	104	A	A	A	A	A	A	A	A
		60	140	A	A	A	A	A	A	A	A
		80	176				A	A	A	A	B
		100	212				A	A	A		
		120	248				A	A			
Lead Nitrate	Satu	20	68	A	A	A	A	A	A	A	A
		40	104	A	A	A	A	A	A	A	A
		60	140	A	A	A	A	A	A	A	A
		80	176		A	A	A	A	A	A	B
		100	212				A	A	A		
		120	248								
Lead Sulfate		20	68	A	A	A	A	A	A	A	A
		40	104	A	A	A	A	A	A	A	A
		60	140	A	A	A	A	A	A	A	A
		80	176		A	A	A	A	A	A	B
		100	212				A	A	A		
		120	248				A	A			
Lemon Oil		20	68			X	A	A			
		40	104				A	A			
		60	140				A	A			
		80	176				A	A			
		100	212				A	A			
		120	248				A	A			
Linoleic Acid		20	68	B			A	A	A	X	B
		40	104	B			A	A			
		60	140	B			A	A			
		80	176				A	A			
		100	212				A	A			
		120	248				A	A			
Linoleic Oil		20	68	B			A	A			
		40	104	B			A	A			
		60	140	B			A	A			
		80	176				A	A			
		100	212				A	A			
		120	248				A	A			
Linseed Oil		20	68	A	A	A	A	A	A	B	B
		40	104	A	A	A	A	A	A		
		60	140	A	A	A	A	A			
		80	176		A	B	A	A			
		100	212				A	A			
		120	248				A	A			
Lithium Bromide	60	20	68	A			A	A	A		
		40	104	A			A	A	A		
		60	140	A			A	A	A		
		80	176				A	A	A		
		100	212				A	A	A		
		120	248				A	A			
Lubricating Oil (ASTM 1)		20	68	A			A	A	A		
		40	104	A			A	A	A		
		60	140	A			A	A	A		
		80	176				A	A	A		
		100	212				A	A	B		
		120	248				A	A			
Lubricating Oil (ASTM 2)		20	68	A			A	A			
		40	104	A			A	A			
		60	140	A			A	A			
		80	176				A	A			
		100	212				A	A			
		120	248				A	A			
Lubricating Oil (ASTM 3)		20	68	A		A	A	A	A	X	A
		40	104	A			A	A	A		B
		60	140	A			A	A	A		
		80	176				A	A	B		
		100	212				A	A	B		
		120	248				A	A			

Chemicals	Concentration (%)	Temp. °C	Temp. °F	PVC	CPVC	PP	PVDF	TEFLON	VITON	EPT	NITRILE
Machine Oil		20	68	A		A	A	A	A	X	A
		40	104	A		A	A	A	A		A
		60	140	A		B	A	A	A		B
		80	176				A	A			
		100	212				A	A			
		120	248								
Magnesium Carbonate		20	68	A	A	A	A	A	A	A	A
		40	104	A	A	A	A	A	A	A	A
		60	140	A	A	A	A	A	A	A	A
		80	176		B	A	A	A	A	A	B
		100	212				A	A	A		
		120	248								
Magnesium Chloride	Satu	20	68	A	A	A	A	A	A	A	A
		40	104	A	A	A	A	A	A	A	A
		60	140	B	A	A	A	A	A	A	A
		80	176		A	A	A	A	A	A	A
		100	212				A	A	B	B	B
		120	248				A	A			
Magnesium Citrate		20	68	A	A	A	A	A	A	A	A
		40	104	A	A	A	A	A	A	A	A
		60	140	A	A	A	A	A	A	A	A
		80	176		A	A	A	A	A	A	B
		100	212				A	A	A		
		120	248				A	A			
Magnesium Hydroxide	Satu	20	68	A	A	A	A	A	A	A	A
		40	104	A	A	A	A	A	A	A	A
		60	140	A	A	A	A	A	A	A	A
		80	176		A	A	A	A	A	A	B
		100	212				A	A	A		
		120	248				A	A			
Magnesium Nitrate		20	68	A	A	A	A	A	A	A	A
		40	104	A	A	A	A	A	A	A	A
		60	140	A	A	A	A	A	A	A	A
		80	176		B	B	A	A	A	A	B
		100	212				A	A	A		
		120	248				A	A			
Magnesium Sulfate		20	68	A	A	A	A	A	A	A	A
		40	104	A	A	A	A	A	A	A	A
		60	140	A	A	A	A	A	A	A	A
		80	176		A	A	A	A	A	A	A
		100	212				A	A	A	B	B
		120	248				A	A			
Manganese Sulfate		20	68	A	A	A	A	A	A	A	A
		40	104	A	A	A	A	A	A	A	A
		60	140		A	A	A	A	A	A	A
		80	176		B	A	A	A	A	A	B
		100	212				A	A	A		
		120	248				A	A			
Maleic Acid		20	68	A	A	A	A	A	A	A	B
		40	104	A	A	A	A	A	A	B	B
		60	140	B	A	A	A	A	B	B	
		80	176		A	A	A	A	B		
		100	212				A	A			
		120	248				A	A			
Maleic Acid	Satu	20	68	A	A	A	A	A	A	A	A
		40	104	A	A	A	A	A	A	A	A
		60	140	A	A	A	A	A	B	A	A
		80	176		A	A	A	A		A	B
		100	212				A	A		B	
		120	248				A	A			
Mercuric Chloride		20	68	A	A	A	A	A	A	A	A
		40	104	A	A	A	A	A	A	A	A
		60	140	A	A	A	A	A	A	A	A
		80	176			A	A	A			
		100	212				A	A			
		120	248				A	A			

Chemicals	Concentration (%)	Temp. °C	Temp. °F	PVC	CPVC	PP	PVDF	TEFLON	VITON	EPT	NITRILE
Mercuric Cyanide	Satu	20	68	A	A	A	A	A	A	A	A
		40	104	A	A	A	A	A			
		60	140	A	A	A	A	A			
		80	176		A	A	A	A			
		100	212				A	A			
		120	248				A	A			
Mercuric Sulfate	Satu	20	68	A	A	A	A	A	A	A	A
		40	104	A	A	A	A	A			
		60	140	A	A	A	A	A			
		80	176		A	A	A	A			
		100	212				A	A			
		120	248				A	A			
Mercurous Nitrate	Satu	20	68				A	A	A	A	A
		40	104				A	A			
		60	140				A	A			
		80	176				A	A			
		100	212				A	A			
		120	248				A	A			
Mercury		20	68	A	A	A	A	A	A	A	A
		40	104	A	A	A	A	A			
		60	140	A	A	A	A	A			
		80	176		A	A	A	A			
		100	212				A	A			
		120	248				A	A			
Methane		20	68	A	A	A	A	A	A	A	A
		40	104	A	A	B	A	A	A	A	A
		60	140	B	B	C	A	A	A	A	A
		80	176		B	C	A	A	A	B	
		100	212		C	X	A	A	B	C	
		120	248				A	A			
Methane Sulfonic Acid	50	20	68				A	A			
		40	104				A	A			
		60	140				A	A			
		80	176				A	A			
		100	212				A	A			
		120	248				A	A			
Methyl Acetate	Pure	20	68	X	X	B	A	A	X	B	X
		40	104				B	A		C	
		60	140				C	A			
		80	176				X	A			
		100	212					A			
		120	248								
Methyl Acrylate	Pure	20	68				A	A	X	B	X
		40	104				B	A			
		60	140				C	A			
		80	176				X	A			
		100	212					A			
		120	248					A			
Methyl Alcohol	Pure	20	68	A	A	A	A	A	B	A	B
		40	104	B	B	A	A	A	B	A	C
		60	140	B	B	A	A	A	C	A	X
		80	176			B	A	A	C	B	
		100	212				A	A	C		
		120	248				A	A			
Methyl Amine		20	68	X	X	X	C	A		A	C
		40	104				X	A			
		60	140					A			
		80	176					A			
		100	212					A			
		120	248								
Methyl Bromide		20	68				A	A		B	X
		40	104				A	A			
		60	140				A	A			
		80	176				A	A			
		100	212				A	A			
		120	248				A	A			

Chemicals	Concentration (%)	Temp. °C	Temp. °F	PVC	CPVC	PP	PVDF	TEFLON	VITON	EPT	NITRILE
Methyl Cellosolve		20	68				A			B	
		40	104				A				
		60	140				A				
		80	176				A				
		100	212				A				
		120	248								
Methyl Chloride		20	68				A	A	X	B	X
		40	104				A	A			
		60	140				A	A			
		80	176				A				
		100	212				A				
		120	248				A				
Methyl Chloroform		20	68				A	A	B	X	X
		40	104				A	A			
		60	140				B	A			
		80	176				C	A			
		100	212					A			
		120	248								
Methyl Ether		20	68						X	X	B
		40	104								
		60	140								
		80	176								
		100	212								
		120	248								
Methyl Ethyl Ketone		20	68	X	X	B	X	A	X	B	X
		40	104			C		A		C	
		60	140			X		A			
		80	176					A			
		100	212					B			
		120	248								
Methyl Formate		20	68						X	A	X
		40	104								
		60	140								
		80	176								
		100	212								
		120	248								
Methyl Isobutyl Carbinol		20	68					A	A	A	A
		40	104					A			
		60	140					A			
		80	176					A			
		100	212					A			
		120	248								
Methyl Isobutyl Ketone		20	68	X	X	B	A	A	X	B	X
		40	104			X	B	A			
		60	140				C	A			
		80	176				X	A			
		100	212					A			
		120	248								
Methyl isopropyl Ketone		20	68				X	A		X	X
		40	104					A			
		60	140					A			
		80	176					A			
		100	212								
		120	248								
Methyl methacrylate		20	68				A	A	X	X	X
		40	104				B	A			
		60	140				C	A			
		80	176				X	A			
		100	212								
		120	248								
Methyl Sulfoxide		20	68				X	A			
		40	104								
		60	104								
		80	176								
		100	212								
		120	248								

Chemicals	Concentration (%)	Temp. °C	Temp. °F	PVC	CPVC	PP	PVDF	TEFLON	VITON	EPT	NITRILE
Methylene Bromide		20	68				A	A	A	X	X
		40	104				A	A			
		60	140				A	A			
		80	176				A	A			
		100	212				A	A			
		120	248				A	A			
Methylene Chloride		20	68	X	X	X	B	A	C	X	X
		40	104				B	A			
		60	140					A			
		80	176								
		100	212								
		120	248								
Methylene Dichloride		20	68					A	B	X	X
		40	104					A			
		60	140					A			
		80	176								
		100	212								
		120	248								
Methylene Iodine		20	68				A	A	A		
		40	104				A	A	A		
		60	140				A	A	A		
		80	176				A	A	A		
		100	212				A	A	A		
		120	248				A	A	A		
Milk		20	68	B		A	A	A			
		40	104	B		A	A	A			
		60	140	B		A	A	A			
		80	176			A	A	A			
		100	212			B	A	A			
		120	248				A	A			
Mineral Oil		20	68	B		A	A	A	A	X	A
		40	104	B		B	A	A			
		60	140			C	A	A			
		80	176				A	A			
		100	212				A	A			
		120	248				A	A			
Monobromo-benzene		20	68								
		40	104								
		60	140								
		80	176								
		100	212								
		120	248								
Monochlor-acetic acid	50	20	68	A	A	B	A	A	B	C	X
		40	104	B	B	B	A	A	X		
		60	140	B	B	X	B	A			
		80	176				B	A			
		100	212				C	A			
		120	248				X				
Monochloro-benzene		20	68			B	A	A	A	X	X
		40	104			C	A	A			
		60	140				B	A			
		80	176				B	A			
		100	212				C	A			
		120	248								
Monoethanol-amine		20	68				X	A		A	A
		40	104					A			
		60	140								
		80	176								
		100	212								
		120	248								
Monomethy-laniline		20	68						A	X	X
		40	104								
		60	140								
		80	176								
		100	212								
		120	248								

Chemicals	Concentration (%)	Temp. °C	Temp. °F	PVC	CPVC	PP	PVDF	TEFLON	VITON	EPT	NITRILE
Motor Oil		20	68				A	A	A	X	A
		40	104				A	A			
		60	140				A	A			
		80	176				A	A			
		100	212				A	A			
		120	248				A	A			
Naphtha		20	68			A	A	A	A	X	C
		40	104			B	A	A			
		60	140			C	A	A			
		80	176				B	A			
		100	212				B	A			
		120	248				X				
Naphthalene		20	68			B	A	A	A	X	X
		40	104				A	A			
		60	140				A	A			
		80	176				A	A			
		100	212				A	A			
		120	248					A			
Nickel Acetate		20	68	A	A	A	A	A	C	A	A
		40	104	A	A	A	A	A			
		60	140	A	A	A	A	A			
		80	176		A	A	A	A			
		100	212				A	A			
		120	248					A			
Nickel Chloride	Satu	20	68	A	A	A	A	A	A	A	A
		40	104	A	A	A	A	A	A	A	A
		60	140	A	A	A	A	A	A	A	A
		80	176		A	A	A	A	A	A	A
		100	212		B		A	A	A	B	B
		120	248				A	A			
Nickel Nitrate	Satu	20	68				A	A	A	A	A
		40	104				A	A	A	A	A
		60	140				A	A	A	A	A
		80	176				A	A	A	A	B
		100	212				A	A	A	A	
		120	248				A	A	A		
Nickel Sulfate	Satu	20	68	A	A	A	A	A	A	A	A
		40	104	A	A	A	A	A	A	A	A
		60	140	A	A	A	A	A	A	A	A
		80	176		B	B	A	A	A	A	A
		100	212		B		A	A	B	B	B
		120	248				A	A			
Nicotine		20	68				A	A			
		40	104				B	A			
		60	140					A			
		80	176					A			
		100	212					A			
		120	248					A			
Nicotinic Acid		20	68				A	A		A	
		40	104				A	A			
		60	140				A	A			
		80	176				A	A			
		100	212				A	A			
		120	248				A	A			
Nitric Acid	10	20	68	A	A	A	A	A	A	A	X
		40	104	A	A	A	A	A	A	A	
		60	140	A	A	A	A	A	A	B	
		80	176	X	A	B	A	A	A	X	
		100	212		X	X	A	A	A		
		120	248			B	A				
Nitric Acid	30	20	68	A	A	A	A	A	A	B	X
		40	104	A	A	A	A	A	A	B	
		60	140	B	B	B	A	A	B	X	
		80	176	X	B	B	A	A	C		
		100	212		X	X	A	A	C		
		120	248				B	A			

Chemicals	Concentration (%)	Temp. °C	Temp. °F	PVC	CPVC	PP	PVDF	TEFLON	VITON	EPT	NITRILE
Nitric Acid	50	20	68	A	A	A	A	A	A	X	X
		40	104	B	B	B	A	A	B		
		60	140	B	C	C	A	A	C		
		80	176	X	C	X	B	A	X		
		100	212		X		B	A			
		120	248				B	A			
Nitric Acid	70	20	68	A	B	C	A	A	C	X	X
		40	104	B	B	X	A	A	X		
		60	140	C	C		A	A			
		80	176	X	X		B	A			
		100	212				C	A			
		120	248								
Nitric Acid	98	20	68	X	X	X	A	A	C	X	X
		40	104				B	B			
		60	140				X	B			
		80	176					C			
		100	212					C			
		120	248								
Nitrobenzene		20	68	X	X	B	A	A	A	B	X
		40	104			C	B	A	A	B	
		60	140			C	B	A	A	B	
		80	176					A			
		100	212					A			
		120	248					A			
Nitroethane	Pure	20	68				A	A	X	A	X
		40	104					A			
		60	140					A			
		80	176					A			
		100	212								
		120	248								
Nitrogen Dioxide		20	68				A	A			
		40	104				B	A			
		60	140				B	A			
		80	176					A			
		100	212					A			
		120	248					A			
Nitromethane	Pure	20	68				A	A		B	X
		40	104				A	A			
		60	140					A			
		80	176					A			
		100	212								
		120	248								
Nitrous Acid	10	20	68						A	B	X
		40	104								
		60	140								
		80	176								
		100	212								
		120	248								
Nitrous Oxide		20	68	A		A	A	A	A	A	
		40	104	A		A	A	A	A	A	
		60	140	A		A	A	A	A	A	
		80	176			A	A	A	A	B	
		100	212				A	A	B		
		120	248				B	A	B		
Octane		20	68				A	A	A	X	A
		40	104				A	A			
		60	140				A	A			
		80	176				A	A			
		100	212				A	A			
		120	248				A	A			
Octene	Pure	20	68				A	A	A	X	A
		40	104				A	A			
		60	140				A	A			
		80	176				A	A			
		100	212				A	A			
		120	248				A	A			

Chemicals	Concentration (%)	Temp. °C	Temp. °F	PVC	CPVC	PP	PVDF	TEFLON	VITON	EPT	NITRILE
Oleic Acid		20	68	A	B	A	A	A	A	X	X
		40	104	A	B	A	A	A	A		
		60	140	B	B	A	A	A	A		
		80	176			A	A	A	A		
		100	212				A	A	A		
		120	248				A	A	B		
Oleum		20	68	X	X	X	X	A	X	X	X
		40	104					A			
		60	140								
		80	176								
		100	212								
		120	248								
Olive Oil		20	68	A	A	A	A	A	A	B	A
		40	104	A	A	A	A	A	A		A
		60	140	A	A	A	A	A	A		A
		80	176		A	A	A	A			A
		100	212				A	A			
		120	248				A	A			
Oxalic Acid	20	20	68	A	A	A	A	A	A	A	A
		40	104	A	A	A	A	A	A	A	A
		60	140	A	A	A	A	A	A		
		80	176		A	A	A	A			
		100	212				A	A			
		120	248				B	A			
Oxalic Acid	50	20	68	A	A	A	A	A	A	A	A
		40	104	A	A	A	A	A			
		60	140	A	A	A	A	A			
		80	176		A	A	A	A			
		100	212				A	A			
		120	248				B	A			
Oxygen Gas		20	68	A	A	A	A	A	A	A	B
		40	104				A	A			
		60	140				A	A			
		80	176				A	A			
		100	212				A	A			
		120	248				A	A			
Ozone		20	68	B	B	C	A	A	A	A	X
		40	104	B	B		A	A			
		60	140				A	A			
		80	176				A	A			
		100	212				A	A			
		120	248				A	A			
Paint Solvents		20	68						X	X	X
		40	104								
		60	140								
		80	176								
		100	212								
		120	248								
Palmitic Acid	5	20	68			A	A	A	A	B	A
		40	104			A	A	A			
		60	140			A	A	A			
		80	176			A	A	A			
		100	212			B	A	A			
		120	248				A	A			
Palmitic Acid	10	20	68			A	A	A	A	B	A
		40	104			A	A	A			
		60	140			A	A	A			
		80	176			A	A	A			
		100	212				A	A			
		120	248				A	A			
Palmitic Acid	70	20	68			A	A	A	A	B	A
		40	104			A	A	A			
		60	140			A	A	A			
		80	176			B	A	A			
		100	212				A	A			
		120	248				A	A			

Chemicals	Concentration (%)	Temp. °C	Temp. °F	PVC	CPVC	PP	PVDF	TEFLON	VITON	EPT	NITRILE
Paraffin		20	68	A	A	A	A	A	B	X	A
		40	104				A	A			
		60	140				A	A			
		80	176				A	A			
		100	212				A	A			
		120	248				A	A			
Peanut Oil		20	68	A	A	A	A	A			
		40	104				A	A			
		60	140				A	A			
		80	176				A	A			
		100	212				A	A			
		120	248				A	A			
Perchloro-ethylene	Pure	20	68	X	X	B	A	A	A	X	X
		40	104			C	A	A	B		
		60	140			X	A	A	X		
		80	176				A	A			
		100	212				A	A			
		120	248				A	A			
Perchloric Acid	10	20	68	A	A	A	A	A	A	B	X
		40	104	A	A	B	A	A			
		60	140	B	B		A	A			
		80	176		B		A	A			
		100	212				A	A			
		120	248				A	A			
Perchloric Acid	70	20	68				A	A			
		40	104				A	A			
		60	140					A			
		80	176					A			
		100	212								
		120	248								
Perphosphate		20	68	A	A	A	A	A	A	A	A
		40	104	A	A	A	A	A			
		60	140	A	A	A	A	A			
		80	176		A	A	A	A			
		100	212				A	A			
		120	248				A	A			
Petroleum Oils		20	68	A	A	B	A	A	A	X	A
		40	104				A	A			
		60	140				A	A			
		80	176				A	A			
		100	212				A	A			
		120	248				A	A			
Phenol		20	68	A	A	A	A	A	B	A	X
		40	104	B	B	A	A	A			
		60	140	B		B	B	A			
		80	176			C	X	A			
		100	212					A			
		120	248					A			
Phenyl Bisulfide	Pure	20	68					A	A	X	C
		40	104					A			C
		60	140					A			X
		80	176					A			
		100	212					A			
		120	248					A			
Phenylhydra-zine		20	68				A	A	X	B	X
		40	104				A	A			
		60	140								
		80	176								
		100	212								
		120	248								
Phosgene Gas		20	68			X					
		40	104								
		60	140								
		80	176								
		100	212								
		120	248								

Chemicals	Concentration (%)	Temp. °C	Temp. °F	PVC	CPVC	PP	PVDF	TEFLON	VITON	EPT	NITRILE
Phosgene Liquid		20	68	B	A	A	A				
		40	104								
		60	140								
		80	176								
		100	212								
		120	248								
Phosphoric Acid	10	20	68	A	A	A	A	A	A	A	A
		40	104	A	A	A	A	A	A	A	A
		60	140	A	A	A	A	A	A	A	B
		80	176		B	A	A	A	A	A	C
		100	212				A	A			
		120	248				A	A			
Phosphoric Acid	50	20	68	A	A	A	A	A	A	A	A
		40	104	A	A	A	A	A	A	A	A
		60	140	A	B	A	A	A	A	A	C
		80	176		C	C	A	A	A	A	X
		100	212				A	A			
		120	248				A	A			
Phosphoric Acid	80	20	68	A	A	A	A	A	A	A	A
		40	104	A	B	B	A	A	A	A	B
		60	140	B	B	B	A	A	A	A	X
		80	176		B	B	A	A	A	A	
		100	212				A	A			
		120	248				A	A			
Phosphorus Pentoxide		20	68	A	A	A	A	A			
		40	104				A	A			
		60	140				A	A			
		80	176				A	A			
		100	212				A	A			
		120	248				A	A			
Phosphorus Red		20	68	A	A	A	A	A			
		40	104				A	A			
		60	140				A	A			
		80	176				A	A			
		100	212				A	A			
		120	248				A	A			
Phosphorus Trichloride	Pure	20	68	X	X	X	A	A	C	X	X
		40	104				A	A	X		
		60	140				A	A			
		80	176				A	A			
		100	212				A	A			
		120	248				A	A			
Phosphorus Yellow		20	68	A	A	A	A	A			
		40	104				A	A			
		60	140				A	A			
		80	176				A	A			
		100	212				A	A			
		120	248				A	A			
Photographic Solutions		20	68	A	A	A	A	A			
		40	104	A	A	A	A	A			
		60	140	A	A	A	A	A			
		80	176			A	A	A			
		100	212				A	A			
		120	248				A	A			
Phthalic Acid		20	68	X	X	X	A	A	A	A	A
		40	104				A	A			
		60	140				A	A			
		80	176				A	A			
		100	212				B	A			
		120	248					A			
Pickling Solutions (Steel)		20	68	A	A	A	A	A			
		40	104	A	A	A	A	A			
		60	140	A	A	A	A	A			
		80	176		B	A	A	A			
		100	212				A	A			
		120	248				A	A			

Chemicals	Concentration (%)	Temp. °C	Temp. °F	PVC	CPVC	PP	PVDF	TEFLON	VITON	EPT	NITRILE
Picric Acid	10	20	68	A	A	A	A	A	A	A	B
		40	104	A	A	A		A	A	A	B
		60	140	A	A	A		A	A	A	C
		80	176		B	A		A	B	B	X
		100	212		B	B		A	C		
		120	248					A			
Plating Solutions (Brass)		20	68	A	A	A	A	A	A	A	
		40	104	A	A	A	A	A			
		60	140	A	A	A	A	A			
		80	176		B	A	A	A			
		100	212				A	A			
		120	248				B	A			
Plating Solutions (Cadmium)		20	68	A	A	X	A	A	A	A	
		40	104	A	A		A	A			
		60	140	A	A		A	A			
		80	176		B		A	A			
		100	212				A	A			
		120	248				A	A			
Plating Solutions (Chrome)		20	68	A	A	X	A	A			
		40	104	A	A		A	A			
		60	140	B	A		A	A			
		80	176		B		A	A			
		100	212				A	A			
		120	248				B	A			
Plating Solutions (Copper)		20	68	A	A	A	A	A	A	A	
		40	104	A	A	A	A	A			
		60	104	A	A	A	A	A			
		80	176		A	A	A	A			
		100	212				A	A			
		120	248					A			
Plating Solutions (Gold)		20	68	A	A	X	A	A	A	A	
		40	104	A	A		A	A			
		60	104	A	A		A	A			
		80	176				A	A			
		100	212				A	A			
		120	248				A	A			
Plating Solutions (Lead)		20	68	A	A	A	A	A	A	A	
		40	104	A	A	A	A	A			
		60	140	A	A	A	A	A			
		80	176				A	A			
		100	212				A	A			
		120	248				A	A			
Plating Solutions (Nickel)		20	68	A	A	A	A	A	A	A	
		40	104	A	A	A	A	A			
		60	140	A	A	A	A	A			
		80	176				A	A			
		100	212				A	A			
		120	248				A	A			
Plating Solutions (Rhodium)		20	68	A	A	A	A	A	A	A	
		40	104	A	A	A	A	A			
		60	140	A		A	A	A			
		80	176				A	A			
		100	212				A	A			
		120	248				A	A			
Plating Solutions (Silver)		20	68				A	A	A	A	
		40	104				A	A			
		60	140				A	A			
		80	176					A			
		100	212					A			
		120	248					A			
Plating Solutions (Tin)		20	68	A	A	A	A	A	A	A	
		40	104	A	A	A	A	A	A	A	
		60	140	B	B	B	A	A	A	B	
		80	176				A	A	B		
		100	212				A	A			
		120	248				B	A			

Chemicals	Concentration (%)	Temp. °C	Temp. °F	PVC	CPVC	PP	PVDF	TEFLON	VITON	EPT	NITRILE
Plating Solutions (Zinc)		20	68					A	A	A	
		40	104					A			
		60	140					A			
		80	176					A			
		100	212					A			
		120	248					A			
Polyethylene Glycol		20	68	A	A	A	A	A	A	A	
		40	104	A	A	A	A	A	A	A	
		60	140	A	A	A	A	A	A	A	
		80	176		B	B	A	A	A	A	
		100	212				A	A	A		
		120	248				A	A			
Polyvinyl Acetate		20	68				A	A	A	A	A
		40	104				A	A			
		60	140				A	A			
		80	176				A	A			
		100	212				A	A			
		120	248				A	A			
Polyvinyl Alcohol		20	68	A	A	A	A	A	A	A	A
		40	104	A	A	A	A	A	A	A	A
		60	140	A	A	A	A	A	A		
		80	176			A	A	A			
		100	212				A	A			
		120	248				A	A			
Potash		20	68	A	A	A	A	A	A	A	A
		40	104	A	A	A	A	A	A	A	A
		60	140	A	A	A	A	A	A	A	A
		80	176		A	A	A	A	A	A	A
		100	212				A	A	A		
		120	248				A	A			
Potassium Acetate	Satu	20	68	A	A	A	A	A	A	A	A
		40	104				A	A			
		60	140				A	A			
		80	176				A	A			
		100	212				A	A			
		120	248				A	A			
Potassium Alum		20	68	A	A	A	A	A	A	A	A
		40	104	A	A	A	A	A	A	A	A
		60	140	A	A	A	A	A	A	A	A
		80	176		A	A	A	A	A	A	B
		100	212				A	A	A		
		120	248				A	A			
Potassium Aluminum Sulfate		20	68	A	A	A	A	A	A	A	A
		40	104	A	A	A	A	A	A	A	A
		60	140	A	A	A	A	A	A	A	A
		80	176		A	A	A	A	A	A	A
		100	212				A	A	A		
		120	248				A	A			
Potassium Bicarbonate	Satu	20	68	A	A	A	A	A	A	A	A
		40	104	A	A	A	A	A	A	A	A
		60	140	A	A	A	A	A	A	A	A
		80	176	A	A	A	A	A	A	A	A
		100	212				A	A	A		
		120	248				A	A			
Potassium Bichromate	Satu	20	68	A	A	A	A	A	A	A	A
		40	104	A	A	A	A	A	A	A	A
		60	140	A	A	A	A	A	A	A	A
		80	176		B	B	A	A	A	A	B
		100	212				A	A	A		
		120	248				A	A			
Potassium Bisulfate		20	68	A	A	A	A	A	A	A	A
		40	104	A	A	A	A	A	A	A	A
		60	140	A	A	A	A	A	A	A	A
		80	176		B	A	A	A	A	A	B
		100	212				A	A	A		
		120	248				A	A			

Chemicals	Concentration (%)	Temp. °C	Temp. °F	PVC	CPVC	PP	PVDF	TEFLON	VITON	EPT	NITRILE
Potassium Borate		20	68	A	A	A	A	A	A	A	A
		40	104	A	A	A	A	A	A	A	A
		60	140	A	A	A	A	A	A	A	A
		80	176		A	A	A	A	A	A	A
		100	212				A	A	A		
		120	248				A	A			
Potassium Bromate		20	68	A	A	A	A	A			
		40	104	A	A	A	A	A			
		60	140	A	A	A	A	A			
		80	176		B	B	A	A			
		100	212				A	A			
		120	248				A	A			
Potassium Bromide		20	68	A	A	A	A	A	A	A	A
		40	104	A	A	A	A	A	A	A	A
		60	140	A	A	A	A	A	A	A	A
		80	176		A	A	A	A	A	A	A
		100	212				A	A	A		
		120	248				B	A			
Potassium Carbonate		20	68	A	A	A	A	A	A	A	A
		40	104	A	A	A	A	A	A	A	A
		60	140	A	A	A	A	A	A	A	A
		80	176		A	A	A	A	A	A	A
		100	212				A	A	A		
		120	248				A	A			
Potassium Chlorate (Aqueous)		20	68	A	A	A	A	A	A	A	C
		40	104	A	A	A	A	A	A	A	
		60	140	B	A	A	A	A	A		
		80	176		B	B	A	A			
		100	212				A	A			
		120	248				A	A			
Potassium Chloride		20	68	A	A	A	A	A	A	A	A
		40	104	A	A	A	A	A	A	A	A
		60	140	A	A	A	A	A	A	A	A
		80	176		A	A	A	A	A	A	A
		100	212				A	A	A		
		120	248				A	A			
Potassium Chromate		20	68	A	A	A	A	A	A	A	A
		40	140	A	A	A	A	A	A	A	A
		60	140	B	B	A	A	A	A	A	A
		80	176		B	B	A	A	A	A	B
		100	212				A	A	A		
		120	248				B	A			
Potassium Copper-cyanide		20	68	A	A	A	A	A	A	A	A
		40	104	A	A	A	A	A	A	A	A
		60	140	A	A	A	A	A	A	A	A
		80	176		B	A	A	A	A	A	
		100	212			B	A	A	A	B	
		120	248				A	A			
Potassium Cyanide		20	68	A	A	A	A	A	A	A	A
		40	104	A	A	A	A	A			
		60	140	A	A	A	A	A			
		80	176		B	B	A	A			
		100	212				A	A			
		120	248				A	A			
Potassium Bichromate	Satu	20	68	A	A	A	A	A	A	A	A
		40	104	A	A	A	A	A	A	A	A
		60	140	A	A	A	A	A	A	A	A
		80	176		B	B	A	A	A	A	B
		100	212				A	A	A		
		120	248				A	A			
Potassium Ferricyanide		20	68	A	A	A	A	A	A	A	A
		40	104				A	A	A	A	
		60	140				A	A	A	A	
		80	176				A	A			
		100	212				A	A			
		120	248				A	A			

Chemicals	Concentration (%)	Temp. °C	Temp. °F	PVC	CPVC	PP	PVDF	TEFLON	VITON	EPT	NITRILE
Potassium Ferrocyanide		20	68	A	A	A	A	A	A	A	A
		40	104				A	A	A	A	
		60	140				A	A	A	A	
		80	176				A	A			
		100	212				A	A			
		120	248				A	A			
Potassium Fluoride		20	68	A	A	A	A	A	A	A	A
		40	104				A	A	A	A	A
		60	140				A	A	A	A	A
		80	176				A	A	A	A	B
		100	212				A	A	A		
		120	248				A	A			
Potassium Hydroxide	25	20	68	A	A	A	A	A	X	A	B
		40	104	A	A	A	A	A		A	B
		60	140	A	A	A	B	A		A	C
		80	176		B	A	C	A		A	X
		100	212				X	A		A	
		120	248					A			
Potassium Hypochlorite		20	68	A	A		A	A	A	A	B
		40	104	A	A		A	A			
		60	140	A			A	A			
		80	176				A	A			
		100	212				A	A			
		120	248				A	A			
Potassium Iodide		20	68	A	A	A	A	A	A	A	A
		40	104	A	A	A	A	A	A	A	A
		60	140	A	A	A	A	A	A	A	A
		80	176		A	A	A	A	A	A	B
		100	212				A	A	A		
		120	248				A	A			
Potassium Nitrate		20	68	A	A		A	A	A	A	A
		40	104	A	A		A	A	A	A	A
		60	140	A	A		A	A	A	A	A
		80	176				A	A	A	A	B
		100	212				A	A	A		
		120	248				A	A			
Potassium Perborate		20	68	A	A	A	A	A			
		40	104	A	A	A	A	A			
		60	140	A	A	A	A	A			
		80	176		A	A	A	A			
		100	212				A	A			
		120	248				A	A			
Potassium Perchlorate		20	68	A	A	A	A	A			
		40	104	A	A	A	A	A			
		60	140	A	A	A	A	A			
		80	176		B	B	A	A			
		100	212				A				
		120	248				A				
Potassium Permanga-nate	10	20	68	A	A	A	A	A	A	A	C
		40	104	A	A	A	A	A	A	A	
		60	140	B	A	A	A	A	A	B	
		80	176		A	A	A	A			
		100	212				A	A			
		120	248				A	A			
Potassium Permanga-nate	25	20	68	A	A	A	A	A	A	A	X
		40	104	A	A	A	A	A	A	A	
		60	140	B	A	A	A	A	A		
		80	176		B	B	A	A			
		100	212				A	A			
		120	248				A	A			
Potassium Persulfate		20	68	A	A	A	A	A			
		40	104				A	A			
		60	140				A	A			
		80	176				A	A			
		100	212				A	A			
		120	248				A	A			

Chemicals	Concentration (%)	Temp. °C	Temp. °F	PVC	CPVC	PP	PVDF	TEFLON	VITON	EPT	NITRILE
Potassium Sulfate	Pure	20	68	A	A	A	A	A	A	A	A
		40	104	A	A	A	A	A	A	A	A
		60	140	A	A	A	A	A	A	A	A
		80	176		A	A	A	A	A	B	
		100	212				A	A	A		
		120	248				A	A	B		
Propane		20	68	A	A	A	A	A	A	X	A
		40	104				A	A			
		60	140				A	A			
		80	176				A	A			
		100	212				A	A			
		120	248				A	A			
Propyl Acetate	Pure	20	68				A	A	X	B	X
		40	104				B	A			
		60	140				C	A			
		80	176				X				
		100	212								
		120	248								
Propyl Acetone	Pure	20	68				X				
		40	104								
		60	140								
		80	176								
		100	212								
		120	248								
Propyl Alcohol	Pure	20	68	A	A	A	A	A	A	A	B
		40	104	A	A	A	A	A	A	A	B
		60	140	B	A	A	A	A	A	A	C
		80	176	B	B	B	A	A	A	A	X
		100	212				A	A	A		
		120	248				A	A			
Propylene Dichloride	Pure	20	68						B	X	X
		40	104								
		60	140								
		80	176								
		100	212								
		120	248								
Propylene Oxide		20	68				X		X	X	X
		40	104								
		60	140								
		80	176								
		100	212								
		120	248								
Pyridine		20	68	X	X	A	C	A	X	B	X
		40	104			A	C	A		C	
		60	140			B	X	A		X	
		80	176					A			
		100	212								
		120	248								
Rhodan Salts		20	68	A	A	A	A	A	A	A	C
		40	104	A	A	A	A	A	A	A	
		60	140	A	A	A	A	A	A	A	
		80	176				A	A	A		
		100	212				A	A			
		120	248				A	A			
Salicylalde-hyde		20	68				A	A	A	A	A
		40	104				A	A			
		60	140				B	A			
		80	176				C	A			
		100	212				X				
		120	248								
Salicylic Acid		20	68				A	A	A	A	A
		40	104				A	A			
		60	140				A	A			
		80	176				A	A			
		100	212				B	A			
		120	248					A			

Chemicals	Concentration (%)	Temp. °C	Temp. °F	PVC	CPVC	PP	PVDF	TEFLON	VITON	EPT	NITRILE
Sewage		20	68	A	A	A	A	A	A	A	A
		40	104	A	A	A	A	A	A	A	A
		60	140	A	A	A	A	A	A	A	
		80	176		A	A	A	A	A		
		100	212				A	A			
		120	248				A	A			
Silicic Acid		20	68	A	A	A	A	A	A	A	A
		40	104	A	A	A	A	A	A	A	A
		60	140	A	A	A	A	A	A	A	A
		80	176		A	A	A	A	A	A	A
		100	212				A	A	A		
		120	248				A	A			
Silicone Oil		20	68	A	A	A	A	A	A	A	A
		40	104	A	A	A	A	A	A		A
		60	140	A	A	A	A	A			
		80	176			A	A	A			
		100	212				A	A			
		120	248				A	A			
Silver Cyanide		20	68	A	A	A	A	A	A	A	A
		40	104	A	A	A	A	A	A	A	
		60	140	A	A	A	A	A	A	A	
		80	176		A	A	A	A			
		100	212				A	A			
		120	248				A	A			
Silver Nitrate		20	68	A	A	A	A	A	A	A	A
		40	104	A	A	A	A	A	A	A	A
		60	140	A	A	A	A	A	A	A	A
		80	176			A	A	A	A	A	B
		100	212				A	A			
		120	248				A	A			
Silver Sulfate		20	68	A	A	A	A	A	A	A	A
		40	104	A	A	A	A	A	A	A	A
		60	140	A	A	A	A	A	A	A	A
		80	176		A		A	A	A	A	B
		100	212				A	A	A		
		120	248				A	A			
Soaps		20	68	A	A	A	A	A	A	A	A
		40	104	A	A	A	A	A	A	A	A
		60	140	A	A	A	A	A	A	A	A
		80	176		A	A	A	A	A	A	A
		100	212				A	A	A		
		120	248				A	A			
Sodium Acetate	Satu	20	68	A	A	A	A	A	B	A	A
		40	104	A	A	A	A	A	C	A	A
		60	140	A	A	A	A	A	C	A	A
		80	176		A	A	A	A		A	B
		100	212				A	A			
		120	248				A	A			
Sodium Alum	Satu	20	68	A	A	A	A	A	A	A	A
		40	104	A	A	A	A	A	A	A	A
		60	140	A	A	A	A	A	A	A	A
		80	176		A	A	A	A	A	A	B
		100	212				A	B	A		
		120	248				A				

Chemicals	Concentration (%)	Temp. °C	Temp. °F	PVC	CPVC	PP	PVDF	TEFLON	VITON	EPT	NITRILE
Sodium Benzoate		20	68	A	A	A	A	A			
		40	104	A	A	A	A	A			
		60	140	A	A	A	A	A			
		80	176			A	A	A			
		100	212				A	A			
		120	248				A	A			
Sodium Bicarbonate		20	68	A	A	A	A	A	A	A	A
		40	104	A	A	A	A	A	A	A	A
		60	140	A	A	A	A	A	A	A	A
		80	176		A	A	A	A	A	A	
		100	212				A	A	A	B	
		120	248				A	A			
Sodium Bichromate	Satu	20	68	A	A	A	A	A	A	A	A
		40	104	A	A	A	A	A	A	A	A
		60	140	A	A	A	A	A	A	A	A
		80	176		B	B	A	A	A	A	B
		100	212				A	A	A		
		120	248				A	A			
Sodium Bisulfate		20	68	A	A	A	A	A	A	A	A
		40	104	A	A	A	A	A	A	A	A
		60	140	A	A	A	A	A	A	A	A
		80	176		B	B	A	A	A	A	A
		100	212				A	A	A	B	C
		120	248				A	A			
Sodium Bisulfite		20	68	A	A	A	A	A	A	A	A
		40	104	A	A	A	A	A	A	A	A
		60	140	A	A	A	A	A	A	A	A
		80	176		B	B	A	A	A	A	A
		100	212				A	A	A	B	C
		120	248				A	A			
Sodium Borate	Satu	20	68			A	A	A	A	A	A
		40	104			A	A	A	A	A	
		60	140			A	A	A	A	A	
		80	176			A	A	A	A		
		100	212			A	A	A			
		120	248				A	A			
Sodium Bromide	Satu	20	68	A	A	A	A	A			
		40	104	A	A	A	A	A			
		60	140	A	A	A	A	A			
		80	176		A	A	A	A			
		100	212				A	A			
		120	248				A	A			
Sodium Carbonate		20	68	A	A	A	A	A	A	A	A
		40	104	A	A	A	A	A	A	A	A
		60	140	A	A	A	A	A	A	A	A
		80	176		A	A	A	A	A	A	B
		100	212				A	A	A		
		120	248				A	A			
Sodium Chlorate	Satu	20	68	A	A	A	A	A	A	A	C
		40	104	A	A	A	A	A	A	A	
		60	140	A	A	A	A	A	A	A	
		80	176		B	B	A	A	B	A	
		100	212		B	B	A	A	B	B	
		120	248				A	A			
Sodium Chloride		20	68	A	A	A	A	A	A	A	A
		40	104	A	A	A	A	A	A	A	A
		60	140	A	A	A	A	A	A	A	A
		80	176		A	A	A	A	A	A	B
		100	212				A	A			
		120	248				A	A			
Sodium Chlorite	25	20	68	A	A	B	A	B	A	A	X
		40	104	A	A	C	A	B	A	B	
		60	140	B	B	C	A	B	A	B	
		80	176					B			
		100	212					B			
		120	248					C			

Chemicals	Concentration (%)	Temp. °C	Temp. °F	PVC	CPVC	PP	PVDF	TEFLON	VITON	EPT	NITRILE
Sodium Cyanide (Solution)		20	68	A	A	A	A	A	A	A	
		40	104	A	A	A	A	A	A	A	
		60	140	A	A	A	A	A	A	A	
		80	176		B	B	A	A	A	A	
		100	212				A	A	B	B	
		120	248				A	A			
Sodium Ferricyanide	Satu	20	68	A	A	A	A	A	A	A	A
		40	104	A	A	A	A	A	A	A	
		60	140	B	A	A	A	A	A	A	
		80	176		B	B	A	A			
		100	212				A	A			
		120	248				A	A			
Sodium Ferro-cyanide	Satu	20	68	A	A	A	A	A	A	A	A
		40	104	A	A	A	A	A	A	A	
		60	140	B	A	A	A	A	A	A	
		80	176		B	B	A	A			
		100	212				A	A			
		120	248				A	A			
Sodium Fluoride		20	68	A	A	A	A	A	A	A	A
		40	104	A	A	A	A	A	A	A	
		60	140	A	A	A	A	A	A	A	
		80	176			A	A	A			
		100	212			A	A	A			
		120	248				A	A			
Sodium Hydroxide	15	20	68	A	A	A	A	A	C	A	A
		40	104	A	A	A	A	A	C	A	A
		60	140	A	A	A	B	A	X	A	A
		80	176		B	B	C	A		B	C
		100	212		B	B	X	A		B	
		120	248					A			
Sodium Hydroxide	30	20	68	A	A	A	A	A	C	A	A
		40	104	A	A	A	A	A	X	A	A
		60	140	A	A	A	B	A		A	A
		80	176		B	B	C	A		A	A
		100	212		C	C	X	A		B	C
		120	248					A			
Sodium Hydroxide	50	20	68	A	A	A	A	A	X	A	A
		40	104	A	A	A	B	A		A	A
		60	140	A	A	A	C	A		A	A
		80	176		B	B	X	A		A	A
		100	212		C	B		A		B	C
		120	248					A			
Sodium Hydroxide	70	20	68	A	A	B	A	A	X	A	X
		40	104	B	A	B	B	A		A	
		60	140	B	B	B	C	A		B	
		80	176		B	B	X	A		C	
		100	212		C	C		A		X	
		120	248					A			
Sodium Hypochlorite	13	20	68	A	A	B	A	A	X	X	X
		40	104	A	A	C	A	A			
		60	140	B	B	C	B	A			
		80	176					A			
		100	212					A			
		120	248					A			
Sodium Metasilicate		20	68	A	A	A	A	A	A	A	A
		40	104	A	A	A	A	A	A	A	A
		60	140	A	A	A	A	A	A	A	A
		80	176		A	A	A	A	A	A	A
		100	212		B	B	A	A	A	B	
		120	248				A	A			
Sodium Nitrate	Satu	20	68	A	A	A	A	A	A	A	A
		40	104	A	A	A	A	A	A	A	A
		60	140	A	A	A	A	A	A	A	A
		80	176		A	A	A	A	A	A	B
		100	212				A	A	A		
		120	248				A	A			

Chemicals	Concentration (%)	Temp. °C	Temp. °F	PVC	CPVC	PP	PVDF	TEFLON	VITON	EPT	NITRILE
Sodium Nitrite	Satu	20	68	A	A	A	A	A	A	A	A
		40	104	A	A	A	A	A	A	A	A
		60	140	B	A	A	A	A	A	A	A
		80	176		B	A	A	A	A	A	B
		100	212				A	A	A		
		120	248				A	A			
Sodium Palmitate (Solution)	5	20	68				A	A			
		40	104				A	A			
		60	140				A	A			
		80	176				A	A			
		100	212				A	A			
		120	248				A	A			
Sodium Perborate		20	68				A	A		A	B
		40	104				A	A			
		60	140				A	A			
		80	176				A	A			
		100	212				A	A			
		120	248				A	A			
Sodium Perchlorate		20	68	A	A	A	A	A			
		40	104	A	A	A	A	A			
		60	140	B	A	A	A	A			
		80	176		B	B	A	A			
		100	212				A	A			
		120	248				A	A			
Sodium Peroxide		20	68	A	A	A	A	A			A
		40	104	A	A	A	A	A			
		60	140	B	A	A	A	A			
		80	176		B	B	A	A			
		100	212				A	A			
		120	248				A	A			
Sodium Phosphate Acid		20	68	A	A	A	A	A	A	A	A
		40	104	A	A	A	A	A	A	A	A
		60	140	A	A	A	A	A	A	A	A
		80	176		B		A	A	A	A	A
		100	212				A	A	B		
		120	248				A	A			
Sodium Phosphate Alkaline		20	68	A	A	A	A	A	A	A	A
		40	104	A	A	A	A	A	A	A	A
		60	140	A	A	A	A	A	A	A	A
		80	176		A	A	A	A	A	A	A
		100	212				A	A	A		
		120	248				A	A			
Sodium Phosphate Neutral		20	68	A	A	A	A	A	A	A	A
		40	104	A	A	A	A	A	A	A	A
		60	140	A	A	A	A	A	A	A	A
		80	176		B	A	A	A	A	A	B
		100	212				A	A	B		
		120	248								
Sodium Sulfate	Satu	20	68	A	A	A	A	A	A	A	A
		40	104	A	A	A	A	A	A	A	A
		60	140	A	A	A	A	A	A	A	A
		80	176		A	A	A	A	A	A	B
		100	212				A	A	A		
		120	248				A	A			
Sodium Sulfide		20	68	A	A	A	A	A	A	A	A
		40	104	A	A	A	A	A	A	A	A
		60	140	A	A	A	A	A	A	A	A
		80	176		A	A	A	A	A	A	B
		100	212				A	A	B		
		120	248				A	A			
Sodium Sulfite		20	68	A	A	A	A	A	A	A	A
		40	104	A	A	A	A	A	A	A	A
		60	140	A	A	A	A	A	A	A	A
		80	176		A	A	A	A	B	B	
		100	212				A	A			
		120	248				A	A			

Chemicals	Concentration (%)	Temp. °C	Temp. °F	PVC	CPVC	PP	PVDF	TEFLON	VITON	EPT	NITRILE
Sodium Thiocyanate		20	68	A	A	A	A	A	A	A	A
		40	104	A	A	A	A	A	A	A	A
		60	140	A	A	A	A	A	A	A	
		80	176				A	A	A		
		100	212				A	A			
		120	248				B	A			
Sodium Thiosulfate		20	68	A	A	A	A	A	A	A	A
		40	104	A	A	A	A	A	A	A	A
		60	140	A	A	A	A	A	A	A	A
		80	176		B	A	A	A	A	A	B
		100	212				A	A	A	B	C
		120	248				A	A			
Sour Crude Oil		20	68			A	A	A	A	X	B
		40	104			A	A	A			
		60	140			A	A	A			
		80	176				A	A			
		100	212				A	A			
		120	248				A	A			
Soybean Oil		20	68	A	A	A	A	A	A	A	A
		40	104	A	A	A	A	A	A	A	A
		60	140	B	A	A	A	A	A	A	A
		80	176		B	B	A	A	A	C	X
		100	212				A	A	C	X	X
		120	248				A	A	X		
Stannic Chloride (Tin (N) Chloride)		20	68	A	A	A	A	A		A	
		40	104	A	A	A	A	A		A	
		60	140	A	A	A	A	A		A	
		80	176		B	B	A	A			
		100	212				A	A			
		120	248				A	A			
Stannous Chloride (Tin (II) Chloride)		20	68	A	A	A	A	A		B	
		40	104	A	A	A	A	A		B	
		60	140	A	A	A	A	A			
		80	176		B	B	A	A			
		100	212				A	A			
		120	248				A	A			
Starch		20	68	A	A	A	A	A	A	A	A
		40	104	A	A	A	A	A	A	A	A
		60	140	A	A	A	A	A	A	A	A
		80	176		A	A	A	A	A	A	A
		100	212				A	A	A		
		120	248				A	A			
Stearic Acid		20	68	A	A	B	A	A	A	X	B
		40	104	A	A	B	A	A	A		B
		60	140	B	A	B	A	A	B		B
		80	176		B	C	A	A	C		
		100	212				A	A			
		120	248				A	A			
Styrene		20	68				A	A	C	X	C
		40	104				A	A			
		60	140				A	A			
		80	176				A	A			
		100	212				B	A			
		120	248					A			
Succinic Acid		20	68	A	A	A	A	A	A	A	A
		40	104	A	A	A	A	A			
		60	140	A	A	A	A	A			
		80	176		B	B	A	A			
		100	212				A	A			
		120	248				B				
Sulfamic Acid	20	20	68	X	X	X	X				
		40	104								
		60	140								
		80	176								
		100	212								
		120	248								

Chemicals	Concentration (%)	Temp. °C	Temp. °F	PVC	CPVC	PP	PVDF	TEFLON	VITON	EPT	NITRILE
Sulfate Liquors (Oil)		20	68						A	A	A
		40	104								
		60	140								
		80	176								
		100	212								
		120	248								
Sulfite Liquor	6	20	68	A	A	A	A	A	A	A	X
		40	104	A	A	A	A	A	A	A	
		60	140	A	A	A	A	A	A	A	
		80	176		A	A	A	A			
		100	212				A	A			
		120	248				A	A			
Sulfur		20	68	A	A		A	A	A	C	X
		40	104	A	A		A	A			
		60	140	B	A		A	A			
		80	176		B		A	A			
		100	212				A	A			
		120	248				A	A			
Sulfur Chloride		20	68			C	A	A	A	X	C
		40	104			X	A	A			
		60	140				A	A			
		80	176				A	A			
		100	212				A	A			
		120	248				A	A			
Sulfur Dichloride		20	68			C	A	A	A	X	X
		40	104			X					
		60	140								
		80	176								
		100	212								
		120	248								
Sulfur Dioxide	(Dry)	20	68	A	A	A	A	A	A	A	
		40	104	A	A	A	A	A	A	A	
		60	140	B	A	A	A	A		A	
		80	176		A	A	A	A		B	
		100	212		B	B	A	A		B	
		120	248				A	A			
Sulfur Dioxide	(Wet)	20	68	A	A	A	A	A	A	A	
		40	104	A	A	A	A	A	A	A	
		60	140	B	A	A	A	A	A	A	
		80	176		B	B	A	A		B	
		100	212		X	B	A	A		C	
		120	248				A	A			
Sulfur Trioxide		20	68	X	X	X	X	B	C	C	X
		40	104						X	X	
		60	140								
		80	176								
		100	212								
		120	248								
Sulfuric Acid	10	20	68	A	A	A	A	A	A	A	A
		40	104	A	A	A	A	A	A	A	A
		60	140	A	A	A	A	A	A	A	A
		80	176		A	A	A	A	A	A	B
		100	212				A	A	A		
		120	248				A	A	A		
Sulfuric Acid	30	20	68	A	A	A	A	A	A	A	A
		40	104	A	A	A	A	A	A	A	A
		60	140	A	A	A	A	A	A	A	A
		80	176		A	A	A	A	A	B	B
		100	212				A	A	A	X	X
		120	248				A	A	A		
Sulfuric Acid	50	20	68	A	A	A	A	A	A	A	A
		40	104	A	A	A	A	A	A	A	B
		60	140	A	A	A	A	A	A	A	B
		80	176		A	A	A	A	A	B	C
		100	212				A	A	A	X	
		120	248				A	B	B		

Chemicals	Concentration (%)	Temp. °C	Temp. °F	PVC	CPVC	PP	PVDF	TEFLON	VITON	EPT	NITRILE
Sulfuric Acid	60	20	68	A	A	A	A	A	A	A	A
		40	104	A	A	A	A	A	A	A	A
		60	140	A	A	A	A	A	A	A	A
		80	176		A	B	A	A	A	B	B
		100	212				A	A	B	X	X
		120	248				A	A	C		
Sulfuric Acid	70	20	68	A	A	A	A	A	A	A	B
		40	104	A	A	A	A	A	A	A	B
		60	140	A	A	A	A	A	A	B	B
		80	176		A	B	A	A	A	B	C
		100	212				A	A	B	C	
		120	248				B	B	C		
Sulfuric Acid	80	20	68	A	A	A	A	A	A	A	B
		40	104	A	A	A	A	A	A	A	B
		60	140	B	B	B	A	A	A	B	C
		80	176		C	B	A	A	B	C	C
		100	212				B	A	C		X
		120	248				B	B			
Sulfuric Acid	90	20	68	A	A	A	A	A	A	A	C
		40	104	B	A	A	A	A	A	B	C
		60	140	B	B	B	A	A	A	C	C
		80	176		C	B	A	A	B	X	C
		100	212				B	B	B		X
		120	248				B	B	X		
Sulfuric Acid	93	20	68	A	A	B	A	A	A	B	C
		40	104	B	A	B	A	A	A	B	X
		60	140	B	B	B	A	A	B	C	X
		80	176		C	B	A	A	B	X	X
		100	212			C	B	B	X		
		120	248				C	B			
Sulfuric Acid	94	20	68	A	A	B	A	A	A	C	X
		40	104	B	B	B	A	A	B	X	X
		60	140	B	C	B	A	B	C	X	X
		80	176			C	B	B	C		
		100	212				C	B			
		120	248				X	B			
Sulfuric Acid	95	20	68	A	A	C	A	A	A	X	X
		40	104	B	B		A	A	C		
		60	140	C	C		A	B	C		
		80	176				B	B			
		100	212				C	B			
		120	248				X	B			
Sulfuric Acid	96	20	68	A	B	X	A	A	B	X	X
		40	104	C	B		A	A	C		
		60	140	C	C		A	B	X		
		80	176		X		B	B			
		100	212				C	B			
		120	248				X	B			
Sulfuric Acid	98	20	68	B	B	X	A	B	X	X	X
		40	104	C	C		A	B			
		60	140	X	X		B	B			
		80	176				C	B			
		100	212				X	B			
		120	248					B			
Sulfuric Acid	100	20	68	X	X	X	X	B	X	X	X
		40	104					B			
		60	140					B			
		80	176					B			
		100	212					B			
		120	248					B			
Sulfurous Acid		20	68	A	A	A	A	A	A	A	C
		40	104	A	A	A	A	A	A	A	
		60	140	A	A	A	A	A	A	A	
		80	176		B	A	A	A	B	A	
		100	212		C	B	A	A	C	B	
		120	248				A	A			

Chemicals	Concentration (%)	Temp. °C	Temp. °F	PVC	CPVC	PP	PVDF	TEFLON	VITON	EPT	NITRILE
Summition (insecticide)		20	68	X	X	A	A	A	A	A	C
		40	104			A	A	A	A	A	
		60	140			B	A	A	A	A	
		80	176				A	A			
		100	212				B	A			
		120	248				B	A			
Tall Oil		20	68				A	A	A	X	A
		40	104				A	A			
		60	140				A	A			
		80	176				A	A			
		100	212				A	A			
		120	248				A	A			
Tannic Acid (Tannin)		20	68	A	A	A	A	A		B	B
		40	104			A	A	A			
		60	140			A	A	A			
		80	176			A	A	A			
		100	212			A	A	A			
		120	248				A	A			
Tanning Liquors		20	68	A	A	A	A	A		B	A
		40	104					A			
		60	140								
		80	176					A			
		100	212					A			
		120	248					A			
Tar		20	68	X	X	B	A	A	A	X	A
		40	104				A	A			
		60	140				A	A			
		80	176				A	A			
		100	212				A	A			
		120	248				A	A			
Tartaric Acid (Dioxysuccinic Acid)		20	68	A	A	A	A	A	A	A	A
		40	104	A	A	A	A	A		A	A
		60	140	B	B	B	A	A		A	A
		80	176		B	C	A	A		A	A
		100	212			X	A	B			
		120	248				A	B			
Tertiary Butyl Alcohol		20	68	A	A	A	A	A	A	B	X
		40	104				A	A			
		60	140				A	A			
		80	176				A	A			
		100	212				A	A			
		120	248				A	A			
Tertiary Butyl Catechol		20	68							B	X
		40	104								
		60	140								
		80	176								
		100	212								
		120	248								
Tetrachloroethane	Pure	20	68				A	A	A	X	X
		40	104				A	A			
		60	140				A	A			
		80	176				A	A			
		100	212				A	A			
		120	248				A	A			
Tetrachloroethylene	Pure	20	68				A	A	A	X	X
		40	104				A	A			
		60	140				A	A			
		80	176				A	A			
		100	212				A	A			
		120	248				A	A			
Tetraethyl Lead	Pure	20	68				A	A	B	X	X
		40	104				A	A			
		60	140				A	A			
		80	176				A	A			
		100	212				A	A			
		120	248				A	A			

Chemicals	Concentration (%)	Temp. °C	Temp. °F	PVC	CPVC	PP	PVDF	TEFLON	VITON	EPT	NITRILE
Tetrahydrofuran	Pure	20	68	X	X	B	B	A	X	X	X
		40	104			C	C	A			
		60	140			X		A			
		80	176					B			
		100	212								
		120	248								
Tetralin (Tetrahydronaphthalene)	Pure	20	68						A	X	C
		40	104								
		60	140								
		80	176								
		100	212								
		120	248								
Tetramethyl Ammonium Hydroxide	50	20	68				A	A			
		40	104				A	A			
		60	140				B	A			
		80	176				B	A			
		100	212				C	A			
		120	248					A			
Titanic Sulfate		20	68	A	A	A	A	A			
		40	104	A	A	A	A	A			
		60	140	A	A	A	A	A			
		80	176		A	A	A	A			
		100	212		A		A	A			
		120	248				A	A			
Titanous Sulfate		20	68	A	A	A	A	A			
		40	104	A	A	A	A	A			
		60	140	A	A	A	A	A			
		80	176		A	A	A	A			
		100	212		B		A	A			
		120	248				A	A			
Titanium Tetrachloride		20	68						A		
		40	104								
		60	140								
		80	176								
		100	212								
		120	248								
Toluene (Toluol)		20	68	X	X	B	A	A	B	X	X
		40	104			C	A	A			
		60	140			X	B	A			
		80	176				C	A			
		100	212				X	B			
		120	248					C			
Tomato Juice		20	68	A		A	A	A			
		40	104	A		A	A	A			
		60	140	A		A	A	A			
		80	176			A	A	A			
		100	212				A	A			
		120	248				A	A			
Triacetin	Pure	20	68						B	A	B
		40	104								
		60	140								
		80	176								
		100	212								
		120	248								
Tributyl Phosphate		20	68			B	A	A	X	B	X
		40	104			B	A	A			
		60	140			C	C	A			
		80	176				X				
		100	212				X				
		120	248								
Trichloroacetic Acid		20	68			A	A	A	X	X	X
		40	104			A	B	A			
		60	140			B	C	A			
		80	176				X				
		100	212								
		120	248								

Chemicals	Concentration (%)	Temp. °C	Temp. °F	PVC	CPVC	PP	PVDF	TEFLON	VITON	EPT	NITRILE
Trichloro-ethylene		20	68			B	A	A	A	X	X
		40	104			C	A	A			
		60	140			X	A	A			
		80	176				B	A			
		100	212					A			
		120	248					A			
Triethanola-mine		20	68			X	X		X	A	C
		40	104								
		60	140								
		80	176								
		100	212								
		120	248								
Triethylamine		20	68				B				
		40	104				C				
		60	140				X				
		80	176								
		100	212								
		120	248								
Trimethyl-propane		20	68				A	A			
		40	104				A	A			
		60	140				A	A			
		80	176				A	A			
		100	212				A	A			
		120	248				A	A			
Turbine Oil (#140)		20	68	A	A	B	A	A	A	X	A
		40	104				A	A	A		
		60	140				A	A	A		
		80	176					A			
		100	212					A			
		120	248					A			
Turpentine		20	68			B	A	A	A	B	B
		40	104			X	A	A			
		60	140			C	A	A			
		80	176				A	A			
		100	212				A	A			
		120	248				A	A			
Urea		20	68	A	A	A	A	A	A	A	A
		40	104	A	A	A	A	A			
		60	140	A	A	A	A	A			
		80	176		A	A	A	A			
		100	212				A	A			
		120	248				A	A			
Urine		20	68	A	A	A	A	A	A	A	A
		40	104	A	A	A	A	A			
		60	140	A	A	A	A	A			
		80	176		A	A	A	A			
		100	212				B	A			
		120	248				B	A			
Varnish		20	68				A	A	A	X	A
		40	104				A	A			
		60	140				A	A			
		80	176				A	A			
		100	212				A	A			
		120	248				A	A			
Vaseline (Petrolatum)		20	68	A	A	A	A	A	A	X	A
		40	104	A	A	A	A	A			
		60	140	A	A	A	A	A			
		80	176		A	A	A	A			
		100	212				A	A			
		120	248				A	A			
Vegetable Oil		20	68	A	A	A	A	A	A	A	A
		40	104				A	A			
		60	140				A	A			
		80	176				A	A			
		100	212				A	A			
		120	248				A	A			

Chemicals	Concentration (%)	Temp. °C	Temp. °F	PVC	CPVC	PP	PVDF	TEFLON	VITON	EPT	NITRILE
Vinegar		20	68	A	A	A	A	A	A	A	C
		40	104	A	A	A	A	A	A	A	
		60	140	A	A	A	A	A	A	A	
		80	176				A	A			
		100	212				B	A			
		120	248				B	A			
Vinyl Acetate		20	68	X	X		A	A	X	B	X
		40	104				A	A		X	
		60	140				A	A			
		80	176				A	A			
		100	212				A	A			
		120	248				A	A			
Water		20	68	A	A	A	A	A	A	A	A
		40	104	A	A	A	A	A	A	A	A
		60	140	A	A	A	A	A	A	A	B
		80	176		A	A	A	A	A	A	C
		100	212				A	A	A	B	
		120	248			A	A				
Water (Distilled Water)		20	68	A	A	A	A	A	A	A	A
		40	104	A	A	A	A	A	A	A	A
		60	140	A	A	A	A	A	A	A	A
		80	176		A	A	A	A			
		100	212				A	A			
		120	248				A	A			
Water (Potable Water)		20	68	A	A	A	A	A	A	A	A
		40	104	A	A	A	A	A	A	A	A
		60	140	A	A	A	A	A	A	A	A
		80	176		A	A	A	A			
		100	212				A	A			
		120	248				A	A			
Water (Salt Water)	Sate	20	68	A	A	A	A	A	A	A	A
		40	104	A	A	A	A	A	A	A	B
		60	140	A	A	A	A	A	A	A	B
		80	176		A	A	A	A	A	A	
		100	212				A	A			
		120	248				A	A			
Water (Sea Water)		20	68	A	A	A	A	A	A	A	A
		40	104	A	A	A	A	A	A	A	B
		60	140	A	A	A	A	A	A	A	B
		80	176		A	A	A	A	A	A	
		100	212				A	A			
		120	248				A	A			
Water (Sewage Water)		20	68	A	A	A	A	A	A	A	A
		40	104	A	A	A	A	A	A	A	A
		60	140	A	A	A	A	A	A	A	A
		80	176		A	A	A	A			
		100	212				A	A			
		120	248				A	A			
Whisky		20	68	A		A	A	A	A	A	A
		40	104	A		A	A	A	A	A	A
		60	140	B		B	A	A	A	A	
		80	176				A	A		A	
		100	212				A	A			
		120	248				A	A			
White Acid		20	68				A	A			
		40	104				A	A			
		60	140				A	A			
		80	176				A	A			
		100	212								
		120	248								
White Liquor		20	68	A	A	A	A	A	A	A	A
		40	104	A	A	A	A	A	A	A	A
		60	140	B	B	B	A	A		A	
		80	176				A	A		A	
		100	212				A	A			
		120	248				B	A			

Chemicals	Concentration (%)	Temp. °C	Temp. °F	PVC	CPVC	PP	PVDF	TEFLON	VITON	EPT	NITRILE
Wines		20	68	A		A	A	A	A	A	A
		40	104	A		A	A	A	A	A	A
		60	140	B		A	A	A		A	
		80	176				A	A		A	
		100	212				A	A			
		120	248				A	A			
Xylene		20	68	X	X	X	A	A	B	X	C
		40	104				A	A			
		60	140				A	A			
		80	176				A	A			
		100	212				A	A			
		120	248				B	A			
Zinc Acetate		20	68	A	A	A	A	A	A	A	A
		40	104	A	A	A	A	A	A	A	A
		60	140	A	A	A	A	A	A	A	A
		80	176		A	A	A	A	A	A	B
		100	212				A	A	A		
		120	248				A	A			
Zinc Chloride		20	68	A	A	A	A	A	A	A	A
		40	104	A	A	A	A	A	A	A	
		60	140	A	A	A	A	A	A	A	
		80	176		A	A	A	A	A	A	
		100	212				A	A	A	B	
		120	248				A	A			
Zinc Nitrate		20	68	A	A	A	A	A	A	A	A
		40	104	A	A	A	A	A	A	A	A
		60	140	A	A	A	A	A	A	A	A
		80	176		A	A	A	A	A	A	B
		100	212				A	A	A		
		120	248				A	A			
Zinc Sulfate		20	68	A	A	A	A	A	A	A	A
		40	104	A	A	A	A	A	A	A	A
		60	140	A	A	A	A	A	A	A	A
		80	176		A	A	A	A	A	A	B
		100	212				A	A	A		
		120	248				A	A			

MIXED CHEMICALS

Chemicals	Concentration (%)	Temp. °C	Temp. °F	PVC	CPVC	PP	PVDF	TEFLON	VITON	EPT	NITRILE
Hydrochloric Acid	36	20	68	B	B	B	A	A	B	B	
		40	104	B	B	B	A	A	B	B	
		60	140			B	A	A	B	C	
		80	176				A	A	B		
Allyl Chloride	12 PPM	100	212				B	A	C		
		120	248				B	A			
Hydrochloric Acid	36	20	68	B	B	B	A	A	B	B	
		40	104	B	B	B	A	A	B	B	
		60	140	B	B	B	A	A	B	C	
		80	176		B	B	A	A	B		
Benzene	54 PPM	100	212				B	A	C		
		120	248				B	A			
Hydrochloric Acid	18	20	68	A	A	A	A	A	B	B	
		40	104	B	B	B	A	A	B	C	
		60	140	B	B	B	A	A	B		
		80	176		B	B	A	A	C		
Chlorobenzene	490 PPM	100	212				A	A			
		120	248				B	A			
Hydrochloric	36	20	68	B	C	B	A	A	B	C	
		40	104	B		B	A	A	B	C	
		60	140				A	A	C		
		80	176				A	A			
Chloro-benzene	890 PPM	100	212				B	A			
		120	248				C	A			

Chemicals	Concentration (%)	Temp. °C	Temp. °F	PVC	CPVC	PP	PVDF	TEFLON	VITON	EPT	NITRILE
Hydrofluoric Acid Chromium Sulfate Sodium Silico-fluoride	220 g/l 1 g/l 12 g/l	20	68	A	A	X	A	A	X	X	
		40	104	B	B		A	A			
		60	140	B	B		A	A			
		80	176		B		A	A			
		100	212				A	A			
		120	248				A	A			
Hydrofluoric Acid Sodium Silico-fluoride Oxalic Acid	350 g/l 17 g/l 1 g/l	20	68	A	A	X	A	A	X	X	
		40	104	B	B		A	A			
		60	140	C	C		A	A			
		80	176				A	A			
		100	212				A	B			
		120	248				A	B			
Hydrochloric Acid Ferrous Chloride	1 = 1 25 28	20	68				A	A		A	A
		40	104				A	A		A	A
		60	140				A	A		A	A
		80	176				A	A		B	A
		100	212				A	A			A
		120	248				A	A			A
Hydrochloric Hydrofluoric Acid	1 = 1 10 15	20	68	A	A		A	A			
		40	104	B	B		A	A			
		60	140	B	B		A	A			
		80	176	X	X		A	A			
		100	212				A	A			
		120	248				A	A			
Hydrochloric Acid Hydrofluoric Acid	1 = 1 18 20	20	68	A	A		A	A			
		40	104	B	B		A	A			
		60	140	B	B		A	A			
		80	176		B		A	A			
		100	212		X		A	A			
		120	248				B	A			
Hydrochloric Nitric Acid	20 (100g) 50 (5g)	20	68	A	A	B	A	A	A	B	
		40	104	A	A	C	A	A	B		
		60	140	B	B	X	A	A			
		80	176		C		A	A			
		100	212				A	A			
		120	248				B	A			
Hydrochloric Acid Ortho-chloro-phenal	36 170 PPM	20	68	B	B	B	A	A	B	B	
		40	104	B	B	B	A	A	B	B	
		60	140	B	B	B	A	A	B	C	
		80	176				A	A	B		
		100	212				B	A	C		
		120	248				B	A			
Hydrochloric Sulfuric Acid	1 = 1 36 98	20	68	B	B	X	A	A	X	X	X
		40	104	X	X		A	A			
		60	140				A	A			
		80	176				B	A			
		100	212				C	A			
		120	248				X	A			
Hydrochloric Acid Sulfuric Acid	20 (100g) 5 (5g)	20	68	A	A	A	A	A	A	A	
		40	104	A	B	A	A	A	A	A	
		60	140	B	B	A	A	A	A	A	
		80	176		B	B	A	A	A	B	
		100	212				A	A			
		120	248				A	A			
Hyrochloric Acid Sulfuric Acid	36 (144g) 98 (13g)	20	68	A	A	A	A	A	X	X	X
		40	104	A	A	A	A	A			
		60	140	B	B	B	A	A			
		80	176		B	B	A	A			
		100	212				A	A			
		120	248				B	A			
Hydrofluoric Acid	250 g/l	20	68	A	A	X	A	A	X	X	
		40	104	A	A		A	A			
		60	140	B	B		A	A			
		80	176		C		A	A			
Ammonium Fluoride	8 g/l	100	212				A	A			
		120	248				A	A			

Chemicals	Concentration (%)	Temp. °C	Temp. °F	PVC	CPVC	PP	PVDF	TEFLON	VITON	EPT	NITRILE
Hydrochloric Acid	1 = 1	20	68	A	A	A	A	A	A	A	
		40	104	A	A	A	A	A	A	A	
	25	60	140	A	A	A	A	A	A	A	
		80	176		A	A	A	A	B	B	
Ferric Chloride	28	100	212		B	B	A	A	C	C	
		120	248				B	A			
Hydrochloric Acid	1 = 1	20	68				A	A	A	A	
		40	104				A	A	A	A	
	20	60	140				A	A	A	A	
		80	176				A	A	B	B	
Ferrous Chloride	28	100	212				A	A	C	C	
		120	248				A	A			
Nitric Acid	1 = 1	20	68	A	A	A	A	A			
	15	40	104	A	A	A	A	A			
		60	140	B	B	B	A	A			
		80	176	X	X		A	A			
Hydrofluoric Acid	3	100	212	X	X		A	A			
		120	248				A	A			
Nitric Acid	1 = 1	20	68	A	A	A	A	A	A	A	
	15	40	104	A	A	A	A	A	A	B	
		60	140	B	C	X	A	A	B		
Hydrofluoric Acid	5	80	176	X	X		A	A	B		
		100	212				A	A	C		
		120	248				B	A	X		
Nitric Acid	1 = 1	20	68	A	B	B	A	A			
	15	40	104	B	C	B	A	A			
		60	140	B	C		A	A			
Hydrofluoric Acid	10	80	176	X	X		A	A			
		100	212				B	A			
		120	248				B	A			
Nitric Acid	1 = 1	20	68	A	B	B	A	A			
	15	40	104	B	C	B	A	A			
		60	140	B	C		A	A			
Hydrofluoric Acid	15	80	176	X	X		A	A			
		100	212				B	A			
		120	248				B	A			
Nitric Acid	1 = 1	20	68	A	A		A	A			
	5	40	104	B	B		A	A			
		60	140	B	B		A	A			
Hydrofluoric Acid	20	80	176	X	B		A	A			
		100	212		X		B	A			
		120	248				B	A			
Nitric Acid		20	68	B	B	B	A	A			
	50	40	104	X	X	X	A	A			
	(100g)	60	140				A	A			
Sulfuric Acid	50	80	176				A	A			
	(100g)	100	212				A	A			
		120	248				A	A			
Sulfuric Acid	1 = 1	20	68	A	A	B	A	A	A	B	
	2	40	104	B	A	C	A	A	B		
		60	140	B	B	X	A	A	C		
Chromic Acid	1	80	176		B		A	A	X		
		100	212		C		A	A			
		120	248				A	A			
Sulfuric Acid	1 = 1	20	68	A	B	X	A	A	A	B	
	10	40	104	B	B		A	A	B		
		60	140	C	X		A	A	C		
Chromic Acid	10	80	176				A	A			
		100	212				A	A			
		120	248				A	A			
Sulfuric Acid	1 = 1	20	68	A	B	X	A	A	B	C	
	10	40	104	B	B		A	A	C		
		60	140	C	X		A	A	X		
Chromic Acid	25	80	176				A	A			
		100	212				A	A			
		120	248				B	A			

Chemicals	Concentration (%)	Temp. °C	Temp. °F	PVC	CPVC	PP	PVDF	TEFLON	VITON	EPT	NITRILE
Sulfuric Acid		20	68	A	B	X	A	A	X	X	X
	4	40	104	B	B		A	A			
	g/l	60	140	B	B		A	A			
Chromic Acid	400	80	176		C		A	A			
	g/l	100	212				A	A			
		120	248				B	A			
Sulfuric Acid		20	68	A	A	X	A	A	A	B	
	15	40	104	A	A		A	A	A	B	
	parts	60	140	B	A		A	A	B	C	
Chromic Acid	5	80	176		B		A	A	C	X	
Phosphoric	80	100	212				A	A	X		
Acid		120	248				A	A			
		20	68	A	A	X	A	A	A	X	
Sulfuric Acid	2 parts	40	104	A	A		A	A	B	X	
Chromic Acid	10	60	140	B	B		A	A	C		
		80	176		B		A	A	X		
Water	80	100	212				A	A			
		120	248				A	A			
		20	68	A	A	X	A	A	X	X	
Sulfuric Acid	0.7	40	104	A	A		A	A			
Chromic Acid	250	60	140	B	B		A	A			
Sodium	1	80	176		B		A	A			
Silicofluoride		100	212				A	A			
	g/l	120	248				A	A			
Sulfuric Acid	1 = 1	20	68	A	A	X	A	A	A	A	
	20	40	104	B	B		A	A	B	B	
		60	140	B	B		A	A	C	C	
Hydrofluoric Acid	10	80	176		C		A	A			
		100	212				A	A			
		120	248				B	A			
Sulfuric Acid	1 = 1	20	68	A	A	X	A	A			
	25	40	104	B	B		A	A			
		60	140	B	B		A	A			
Hydrofluoric Acid	15	80	176	X	X		A	A			
		100	212				B	A			
		120	248				B	A			
		20	68	A	A	B	A	A			
Sulfuric Acid	75	40	104	A	A	B	A	A			
Nitric Acid	5	60	140	B	B	C	A	A			
Chlorine Gas	Little	80	176		B		A	A			
		100	212					A			
		120	248					A			
	1 = 1	20	68	A	A	A	A	A	A	A	
Sulfuric Acid	75	40	104	A	A	B	A	A	B	A	
		60	140	A	A	B	A	A	C	B	
Sulfurous Acid	4	80	176		B	B	A	A	X	C	
		100	212				A	A		X	
		120	248				A	A			
		20	68	A	A	A	A	A	A	A	
Sulfuric Acid	150	40	104	A	A	A	A	A	A	A	
Spelter	80	60	140	A	A	A	A	A	A	A	
Manganese Sulfate	2	80	176		B	B	A	A	B	B	
		100	212				A	A	C	C	
	g/l	120	248				A	A	X	X	
		20	68	A	A	A	A	A	A	A	B
Sodium Sulfide	225	40	104	A	A	A	A	A	A	A	
		60	140		A	A	A	A	A	A	
Sulfuric Acid	225	80	176		B	B	B	B	A		
	g/l	100	212				B	B	A		
Formaldehyde	50	120	248								

Additional Chemical Resistance

Chemicals	Concentration %	Temp. °C	Temp. °F	Valve Body PVC	CPVC	PP	PPG	PVDF	Diaphragm PTFE	FPM	EPDM	NBR	CR	IIR	CSM
Calcium Bromide	Satu	20	68	A	A	A	A	A	A	A	A	A	A	A	A
		40	104	A	A	A	A	A	A	A	A	A	A	A	A
		60	140	A	A	A	A	A	A	A	A	A	A	A	A
		80	176					A	A						
		100	212					A	A						
Lithium Chloride	Satu	20	68	A	A	A	A	A	A	A	A	A			
		40	104	A	A	A	A	A	A	A	A	A			
		60	140	A	A	A	A	A	A	A		A			
		80	176			A	A	A	A	A		A			
		100	212					A	A						
		120	248					B							
Nickel Ammonium Sulfate	Satu	20	68					A	A		A				
		40	104					A	A		A				
		60	140					A	A		A				
		80	176					A	A						
		100	212						A						
Phosphorous Oxychloride	Pure	20	68	X	X	X	X	X	B	X	X	X	X	X	X
		40	104						C						
		60	140												
		80	176												
		100	212												
Poly Aluminum Chloride		20	68	A	A	A	A	A	A	A	A	A		A	A
		40	104	A	A	A		A	A	A	A				
		60	140		A	A		A	A	A	A				
		80	176						A						
Sodium Silicofluoride	Satu	20	68	A	A	A		A	A	A	A				
		40	104	A	A	A		A	A	A	A				
		60	140	B	A	A		A	A	A	B				
Zinc Bromide	Satu	20	68	A	A	A	A	A	A	A	A	A	A	A	A
		40	104	A	A	A	A	A	A	A	A	A	A	A	A
		60	140	A	A	A	A	A	A	A	A	A	A	A	A
		80	176				A	A							
Sulfuric acid (98%)	1	20	68					A	A						
	-	40	104					A	A						
Phosphoric acid (80%)	1	60	140					C	B						
		80	176												
Nitric acid (100%)	3	20	68					B	A						
	-	40	104					C	C						
Hydrofluoric (55%)	4	60	140												
	-	80	176												
Phosphoric acid (100%)	3	100	212												
		120	248												

FRP FOR TANKS 6-9 AND PIPES 6-16

DOW

CHEMICAL RESISTANCE GUIDE

DERAKANE

VINYL ESTER RESINS

PIPES 10-16

TANKS & PIPES No. 6-9

Table 11. Maximum Service Temperature vs Chemical Environment† of DERAKANE Resins

Chemical Environment	% Concentration	Maximum Recommended Temperature, °F/°C				
		DERAKANE 411	DERAKANE 470	DERAKANE 8084	DERAKANE 510A-40 and 530	DERAKANE 510N
A						
Acetaldehyde	100	NR		NR	NR	
Acetic Acid	10	210/99	210/99	150	210/99	210/99
Acetic Acid	15	210/99	210/99	150	210/99	210/99
Acetic Acid	25	210/99	210/99	150	210/99	210/99
Acetic Acid	50	180/82	180/82		180/82	180/82
Acetic Acid	75	150/65	150/65			150/65
Acetic Acid, Glacial	100	NR	100/38	NR	NR	NR
Acetic Anhydride	100	NR	100/38	NR	NR	NR
Acetone	10		180/82		180/82	180/82
Acetone	100	NR	NR	NR	NR	NR
Acid Cleaner—31% hydrochloric acid		180/82	190/88	180	180/82	190/88
Acrylamide[7]	50	80/27	100/38	80	80/27	100/38
Acrylic Acid[7]	25	100/38	100/38	100	100/38	100/38
Acrylic Latex		120/49	120/49	120	120/49	120/49
Acrylonitrile[7] Latex dispersion	2	80/27	80/27	80	80/27	80/27
Activated Carbon Beds, Water Treatment		180/82	210/99	150	180/82	210/210
Adipic Acid (1.5 g sol. in water at 25°C., sol. hot water)	23	180/82	180/82		180/82	180/82
Agricultural Chemicals, Spray Operation[6]		120/49	120/49			120/49
Air One Sided (Uninsulated) Air Temp		360/180	450/230		380/190	410/210
Immersion		300/150	360/180		320/160	340/170
ALAMINE amines		150/65	180/82		150/65	180/82
Alcohol, Amyl	All	120/49	210/99	120	120/49	180/82
Alcohol, Butyl	All	120/49	120/49		120/49	120/49
Alcohol, Ethyl	95%	80/27	100/38	NR	80/27	80/27
Alcohol, Isodecyl[7]	All	120/49	120/49	120	120/49	120/49
Alkaline Cleaner—See sodium & potassium hydroxides						
Alkaline Solutions—See sodium, potassium, ammonium hydroxides, and carbonates						
Alkyl Benzene Sulfonic Acid	92	120/49	120/49	120		120/49
Allyl Alcohol[12]	100	NR	80/27	NR	NR	NR

†Service recommendations given for a specific resin type pertain to all members of that resin family unless otherwise noted.

A blank space in the table indicates no data available at the time temperature ratings were assigned.

NR: Not Recommended. Drains, flooring, gratings, and structural supports for walkways and stairways, where exposure is intermittent or is to fumes or spills only, may give good service in those chemical environments shown as NR (not recommended).

[6]Check with corrosion technical service lab for specific recommendations.

[7]Probably satisfactory at higher temperatures but temperature shown is the highest for which information was available.

[12]If service is marginal use DERAKANE 470-36 resin.

—Continued

Maximum Service Temperature vs Chemical Environment

Chemical Environment	% Concentration	Maximum Recommended Temperature, °F/°C				
		DERAKANE 411	DERAKANE 470	DERAKANE 8084	DERAKANE 510A-40 and 530	DERAKANE 510N
Allyl Chloride	All	80/27	80/27	NR	80/27	80/27
Allyl Tolyl Trimethyl Ammonium Chloride	—				100/38	
Alpha Methyl Styrene	100	80/27	120/49	NR		120/49
Alpha Oleum Sulfates	100	120/49	120/49		120/49	120/49
Alum	All	210/99	250/121	180 1:2	210/99	250/121
Alumina Hydrate[6]						
Aluminum Chloride	All	210/99	250/121	180	210/99	250/121
Aluminum Chlorohydrate	All	210/99	210/99	180	210/99	210/99
Aluminum Chlorohydroxide	50	210/99	210/99	180	210/99	210/99
Aluminum Fluoride[1,7]	All	80/27	80/27	80	80/27	80/27
Aluminum Hydroxide	100	180/82	200/93	180	180/82	180/82
Aluminum Nitrate	10	180/82	180/82	180	180/82	180/82
Aluminum Nitrate	100	180/82	180/82	180	180/82	180/82
Aluminum Potassium Sulfate	All	210/99	250/121	180	210/99	250/121
Aluminum Sulfate	All	210/99	250/121	180	210/99	250/121
AMBITROL* Ethylene Glycol		210/99	210/99		210/99	210/99
Amino Acids			100/38			
Ammonia	Liquefied Gas	NR	NR	NR	NR	NR
Ammonia[7]	Gas	100/38	100/38	100	100/38	100/38
Ammonia, Aqueous (See Ammonium Hydroxide)						
Ammonium Acetate	65	80/27	80/27	NR	80/27	80/27
Ammonium Bicarbonate	10	160/71	160/71	160	160/71	160/71
Ammonium Bicarbonate	50	160/71	160/71	160	160/71	160/71
Ammonium Bifluoride	100	150/65	150/65	150		
Ammonium Bisulfite black liquor		180/82	180/82		180/82	180/82
Ammonium Bisulfite cooking liquor		150/65	150/65		150/65	150/65
Ammonium Bromate	43	160/71	160/71	160		
Ammonium Bromide	43	160/71	160/71	160		
Ammonium Carbonate	All	150/65	150/65	150	150/65	150/65
Ammonium Chloride	All	210/99	210/99	180	210/99	210/99
Ammonium Citrate	All	150/65	150/65	150	150/65	150/65
Ammonium Fluoride[1]	All	150/65	150/65	150	150/65	150/65
Ammonium Hydroxide[1]	5	180/82	180/82	180	180/82	180/82
Ammonium Hydroxide[1]	10	150/65	150/65	150	150/65	150/65
Ammonium Hydroxide[1]	20	150/65	150/65	150	150/65	150/65

A blank space in the table indicates no data available at the time temperature ratings were assigned.

NR: Not Recommended. Drains, flooring, gratings, and structural supports for walkways and stairways, where exposure is intermittent or is to fumes or spills only, may give good service in those chemical environments shown as NR (not recommended).

[1]Double synthetic veil should be used in inner layer.
[2]Post-cure recommended to increase service life.
[3]Benzoyl peroxide – DMA cure system recommended to increase service life.
[4]Recommended provided that solvent used for dissolution is also recommended.
[5]Satisfactory up to maximum stable temperature for product.

Chemical Environment	% Concentration	Maximum Recommended Temperature, °F/°C				
		DERAKANE 411	DERAKANE 470	DERAKANE 8084	DERAKANE 510A-40 and 530	DERAKANE 510N
Ammonium Hydroxide[1]	29	100/38	100/38	100	100/38	100/38
Ammonium Lauryl Sulfate	30	120/49	120/49	120	120/49	120/49
Ammonium Ligno Sulfonate	50	180/82	180/82	150	180/82	180/82
Ammonium Molybdate	All	150/65		150		
Ammonium Nitrate	All	210/99	250/121	180	220/104	250/121
Ammonium Oxalate	All	150/65				
Ammonium Pentaborate	12	120/49		120		
Ammonium Persulfate	All	180/82	180/82	180	180/82	180/82
Ammonium Phosphate, dibasic	All	210/99	210/99	180	210/99	210/99
Ammonium Phosphate, monobasic	All	210/99	210/99	180	210/99	210/99
Ammonium Polysulfide	Sat'd	120/49	150/65	120		
Ammonium Sulfate	All	210/99	250/121	180	220/104	250/121
Ammonium Sulfide (Bisulfide)	Sat'd	120/50	120/50	120		
Ammonium Sulfite	Sat'd	150/65	150/65	150	150/65	
Ammonium Thiocyanate	50	100/38	100/38	100	100/38	100/38
Ammonium Thioglycolate	7½	100/38				
Ammonium Thiosulfate	60	100/38	100/38		100/38	100/38
Amyl Acetate	All		120/49[7]			
Amyl Alcohol	All	120/49	210/99		120/49	180/82
Amyl Alcohol, Vapor		120	210/99		120	210/99
Amyl Chloride	100	120/49	120/49[7]		120/49	120/49
Aniline	100	NR	70/21	NR	NR	NR
Aniline Hydrochloride	All	180/82	180/82		180	180
Aniline Sulfate	All	210/99	210/99		210/99	210/99
Anodize (15% Sulfuric)			210/99			
Aqua Regia[6]						
ARMEEN H.T. amines		100/38				
Arsenic Acid	All	100/38	100/38	100		
Arsenious Acid	19°Be	180/82	180/82	150	180/82	180/82
B						
Barium Acetate	All	180/82	180/82			180/82
Barium Bromide	All	210/99	210/99	180	210/99	210/99
Barium Carbonate	All	210/99	250/121	180	210/99	250/121
Barium Chloride	All	210/99	210/99	180	210/99	210/99
Barium Cyanide	All	150/65	150/65	150	150/65	150/65
Barium Hydroxide	All	150/65	150/65	150	150/65	150/65
Barium Sulfate	All	210/99	250/121	180	210/99	250/121

[6]Check with corrosion technical service lab for specific recommendations.
[7]Probably satisfactory at higher temperatures but temperature shown is the highest for which information was available.
[8]Double c-veil and 200 mil corrosion liner should be used.
[9]Double c-veil.
[10]Call for recommendations if sulfuric acid is present.
[11]DERAKANE 470-45 resin is recommended for alkaline and hypo service.
[12]If service is marginal use DERAKANE 470/36 resin.
*Trademark of The Dow Chemical Company

– Continued

Maximum Service Temperature vs Chemical Environment

Chemical Environment	% Concentration	Maximum Recommended Temperature, °F/°C				
		DERAKANE 411	DERAKANE 470	DERAKANE 8084	DERAKANE 510A-40 and 530	DERAKANE 510N
Barium Sulfide	All	180/82	180/82		180/82	180/82
Barley Solution		165/73		165		
Beer		120/49				
Beet Sugar Liquor		180/82		150		
Benzaldehyde[12]	100	NR	70/21	NR	NR	NR
Benzalkonium Chloride	Dilute	100/38		100		
Benzene[12]	100	NR	100/38	NR	NR	NR
Benzene, Ethyl Benzene[12]	1/3:2/3	NR	100/38	NR	NR	80/27
Benzene, Hydrochloric Acid (Wet)[12]		NR	100/38	NR	NR	80/27
Benzene, Vapor[12]		80/27	120/49	NR	NR	80/27
Benzene Sulfonic Acid	50	150/65	150/65	150	150/65	150/65
Benzoic Acid	Sat'd	210/99	210/99	180	210/99	210/99
o-benzoyl Benzoic Acid	All	210/99	210/99	150	210/99	210/99
Benzyl Alcohol	All	NR	100/38	NR	NR	80/27
Benzyl Chloride[12]	100	NR	80/27	NR	NR	NR
Benzyltrimethylammonium Chloride	60	100/38	100/38		100	100
Bisulfite in Scrubber	Gases	180/82	350/177		190/88	350/177
Black Liquor (Pulp Mill)	All	180/82	180/82		180/82	180/82
Black Liquor (Pulp Mill) Thick	All	200/93	220/104		220/104	220/104
Black Liquor Kraft	Thin	180/82	180/82		180/82	180/82
	Thick	200/93	220/104		200/93	220/104
Black Liquor recovery,[6] furnace gases		325/163	400/204[7]		325/163	350/163
Bleach Liquor (Pulp Mill)	100	180/82	200/93		180/82	200/93
Bleaches						
Calcium Hypochlorite[1,2,3]	All	160/71	180/82	160	160/71	160/71
Chlorine Dioxide, Wet[1,2,3]	Sat'd	180/82	200/86	180	160/71	160/71
Chlorine Water[1,2,3]	Sat'd	180/82	210/99	180	180/82	210/99
Lithium Hypochlorite	All	150/65	180/82	150	150/65	150/65
Peroxides Dilute		210/99	210/99		210/99	210/99
Sodium Hypochlorite[1,2,3,6]	5¼	150/65	180/82	150	120/49	150/65
	10	180/82	180/82	180	120/49	150/65
	18	180/82	180/82	180	120/49	150/65
TEXTONE Liquid		210/99	210/99		180/82	180/82
Blood Proteins	20	100/38				
Blood Sugar	All	210/99	250/121			250/121

A blank space in the table indicates no data available at the time temperature ratings were assigned.

: **Not Recommended.** Drains, flooring, gratings, and structural supports for walkways and stairways, where exposure is intermittent or is to fumes or spills only, may give good service in those chemical environments shown as NR (not recommended).

[1]Double synthetic veil should be used in inner layer.
[2]Post-cure recommended to increase service life.
[3]Benzoyl peroxide – DMA cure system recommended to increase service life.
[4]Recommended provided that solvent used for dissolution is also recommended.
[5]Satisfactory up to maximum stable temperature for product.
[12]If service is marginal use DERAKANE 470-36 resin.

Chemical Environment	% Concentration	Maximum Recommended Temperature, °F/°C				
		DERAKANE 411	DERAKANE 470	DERAKANE 8084	DERAKANE 510A-40 and 530	DERAKANE 510N
Blow Down (Non-Condensable Gases)[8]		250/121	250/121		250/121	250/121
Borax	100	210/99	210/99	180	210/99	210/99
Boric Acid	All	210/99	210/99	180	210/99	210/99
Brake Fluid HD 557		120	120/49[7]	120	120	120/49
Brass Plating Solution 3% Copper: 1% Zinc and 5.6% Sodium Cyanides, 3% Sodium Carbonate[1]		180/82	180/82	180	180/82	180/82
Brine	All	210/99	210/99	180	210/99	210/99
Bromine, Dry Gas		100/38	100/38	100	100/38	100/38
Bromine, Liquid	100	NR	NR	NR	NR	
Bromine, Wet Gas	100	100/38	100/38	100	100/38	100/38
Brown Stock		180/82	180/82		180/82	180/82
Bunker C Fuel Oil	100	210/99	220/104	150	210/99	220/104
Butanol (See Butyl Alcohol)						
2-Butoxyethanol	100	100/38	100/38	NR	100	100/38
2, 2-Butoxyethoxyethanol	100	100/38	100/38	NR	100	100/38
Butyl Acetate	100	NR	80/27	NR	NR	80/27
Butyl Acrylate[12]	100	NR	80/27	NR	NR	NR
Butyl Alcohol	All	120/49	120/49[7]	NR	120/49	120/49
Butyl Benzoate	70		100/38			
Butyl Benzyl Phthalate	100	180/82	210/99		180/82	210/99
Butyl CARBITOL diethylene glycol	100	80/27	100/38		80/27	100/38
Butyl CELLOSOLVE Solvent	100	100/38	100/38		80/27	100/38
Butyl Hypochlorite	98	NR	NR	NR	NR	NR
Butyl Stearate (5% in Mineral Spirits)		100/38				
Butylene Glycol	100	160/71	180/82		160/71	180/82
Butylene Oxide	100	NR	NR	NR	NR	NR
Butyraldehyde	100	NR	100/38	NR	NR	NR
Butyric Acid	25	210/99	210/99		210/99	210/99
Butyric Acid	50	210/99	210/99		210/99	210/99
Butyric Acid	100	80/27	120/49		80/27	120/99
C						
Cadmium Chloride	All	180/82	180/82	180	180/82	180/82

[6]Check with corrosion technical service lab for specific recommendations.
[7]Probably satisfactory at higher temperatures but temperature shown is the highest for which information was available.
[8]Double c-veil and 200 mil corrosion liner should be used.
[9]Double c-veil.
[10]Call for recommendations if sulfuric acid is present.
[11]DERAKANE 470-45 resin is recommended for alkaline and hypo service.
[12]If service is marginal use DERAKANE 470-36 resin.
*Trademark of The Dow Chemical Company

—Continued

Maximum Service Temperature vs Chemical Environment

Chemical Environment	% Concentration	Maximum Recommended Temperature, °F/°C				
		DERAKANE 411	DERAKANE 470	DERAKANE 8084	DERAKANE 510A-40 and 530	DERAKANE 510N
Cadmium Cyanide Plating Bath, (3% Cadmium Oxide; 10% Sodium Cyanide; 1.2% Sodium Hydroxide)[1]		180/82	180/82	180	180/82	180/82
Calcium Bisulfite	All	180/82	180/82	180	180/82	180/82
Calcium Bromide	All	210/99	210/99	180	210/99	210/99
Calcium Chlorate	All	210/99	250/121	180	220/104	250/121
Calcium Chloride	All	210/99	250/121	180	220/104	250/121
Calcium Hydroxide[1]	15	180/82	180/121	180	180/82	180/82
Calcium Hydroxide[1]	25	210/99	210/99	180	210/99	210/99
Calcium Hydroxide[1]	100	210/99	210/99	180	210/99	210/99
Calcium Hypochlorite[1,2,3,5]	All	160/71	180/82	160	160/71	160/71
Calcium Nitrate	All	210/99	210/99	180	210/99	210/99
Calcium Sulfate	All	210/99	250/121	180	220/104	250/121
Calcium Sulfite		180/82	180/82	180	180/82	180/82
CALGON (Product E) sodium hexametaphosphate		120/49				
Cane Sugar Liquor & Sweetwater	All	180/82				
Caprylic Acid (See Octanoic Acid)	All	180/82	210/99		180/82	210/99
Caramel[7]		120/49				
Carbon Dioxide Gas		210/99	350/177	180	325/163	350/177
Carbon Disulfide	100	NR	NR	NR	NR	NR
Carbon Disulfide	Fumes	NR	150/65	NR	NR	150/65
Carbon Monoxide Gas[6]		210/99	400/204[7]	180	325/163	350/177
Carbon Tetrachloride	100	150/65	180/82		150	180/82
Carbon Tetrachloride, vapor		175/79	200/93		175	200/93
CARBOWAX Polyethylene Glycol	100	150/65	180/82	150	150	180/82
Carboxyethyl Cellulose	10	150/65	150/65	150	150/65	150/65
CASCADE Detergent in Solution		180/82	180/82	180	180/82	180/82
Cashew Nut Oil	100	150/65				
Castor Oil	100	160/71[7]	160/71[7]	160	160/71[7]	160/71[7]
Caustic (See Sodium Hydroxide)						
Chlorinated Pulp		180/82	200/93			
Chlorinated Solvent Recovery (See specific solvents)						
Chlorinated Wax	All	180/82	180/82		180/82	180/82

A blank space in the table indicates no data available at the time temperature ratings were assigned.

NR: **Not Recommended.** Drains, flooring, gratings, and structural supports for walkways and stairways, where exposure is intermittent or is to fumes or spills only, may give good service in those chemical environments shown as NR (not recommended).

[1]Double synthetic veil should be used in inner layer.
[2]Post-cure recommended to increase service life.
[3]Benzoyl peroxide – DMA cure system recommended to increase service life.
[4]Recommended provided that solvent used for dissolution is also recommended.
[5]Satisfactory up to maximum stable temperature for product.

Chemical Environment	% Concentration	Maximum Recommended Temperature, °F/°C				
		DERAKANE 411	DERAKANE 470	DERAKANE 8084	DERAKANE 510A-40 and 530	DERAKANE 510N
Chlorination Washer, Hoods & Vent Systems		180/82	200/93	150		
Chlorine - Hydrochloric Acid, Wet	8-10	210	350/177	180		
Chlorine Dioxide	All	150/65	150/65	150	150/65	150/65
Chlorine Dioxide, Wet	Sat'd	180/82	180/82	180	160/71	180/82
Chlorine Dioxide Generator Effluent, R2 System		150/65	180/82	150	150/65	180/82
Chlorine Water	Sat'd	180/82	210/99	180	180/82	180/82
Chlorine, dry gas[8]	100	210/99	250/121	180	220/104	250/121
Chlorine, wet gas[8]	100	210/99	250/121	180	220/104	250/121
N-Chloro O Tolyl (insecticide emulsion)	10	120/49	120/49		120/49	120/49
Chloroacetic Acid[6]	25	120/49	120/49		150/66	120/49
Chloroacetic Acid[6]	50	100/38	100/38		120/49	100/38
Chloroacetic Acid	Conc.	NR	NR	NR	NR	NR
Chlorobenzene	100	NR	100/38	NR	NR	80/27
Chloroform	100	NR	NR	NR	NR	NR
Chloropyridine (tetra)	100	120/49	120/49			120/49
Chlorosulfonic Acid	10	NR	NR	NR	NR	NR
CHLOROTHENE* NU 1,1,1 Trichloroethane	100	100/38	120/49[7]	NR	100/38	120/49[7]
Chlorotoluene	100	80	100/38	NR	80	100
Chrome Bath, 19% Chromic Acid with Sodium Fluorosilicate and Sulfate[1]		120/49	105/65	120	120/49	120/49
Chromic Acid[10]	5	150/65	150/65	150	150/65	150/65
Chromic Acid[10]	10	150/65	150/65	150	150/65	150/65
Chromic Acid[10]	20	150/65	150/65	120	150/65	150/65
Chromic Acid	30	NR		NR	NR	
Chromium Plate		130/54	130/54	130	130/54	130/54
Chromium Sulfate	All	180/82	180/82	180	180/82	180/82
Citric Acid	All	210/99	210/99	150	210/99	210/99
Cobalt Chloride	All	180/82	180/82	180		
Cobalt Citrate	12	180/82	180/82	120		
Cobalt Nitrate[7]	15	120/49	120/49	120		
Coconut Oil	All	180/82	200/93	180	180/82	200/93
Cod-liver Oil	100	100/38				

[6]Check with corrosion technical service lab for specific recommendations.
[7]Probably satisfactory at higher temperatures but temperature shown is the highest for which information was available.
[8]Double c-veil and 200 mil corrosion liner should be used.
[9]Double c-veil.
[10]Call for recommendations if sulfuric acid is present.
[11]DERAKANE 470-45 resin is recommended for alkaline and hypo service.
[12]If service is marginal use DERAKANE 470-36 resin.
*Trademark of The Dow Chemical Company

—Continued

Maximum Service Temperature vs Chemical Environment

Chemical Environment	% Concentration	Maximum Recommended Temperature, °F/°C				
		DERAKANE 411	DERAKANE 470	DERAKANE 8084	DERAKANE 510A-40 and 530	DERAKANE 510N
CONTINUE ETCH solvent[7]		100/38	100/38	100		
Copper Chloride	All	210/99	250/121	180	220/104	250/121
Copper Cyanide	All	210/99	210/99	180	210/99	210/99
Copper Cyanide Plating Bath (10.5% Copper and 14% Sodium Cyanides; 6% Rochelle Salts)		160/71	160/71	160	160/71	160/71
Copper Cyanide, Potassium Cyanide, Potassium Hydroxide[1]	8:3:2 oz/gal	180/82	180/82	180	180/82	180/82
Copper Matte Dipping Bath, 30% $FeCl_3$; 19% Hydrochloric		180/82	200/93	180	200/93	200/93
Copper Nitrate	All	210/99	210/99	180	210/99	210/99
Copper Plating Solution (45% $Cu(BF_4)_2$; 19% Copper Sulfate; 8% Sulfonic)[1]		180/82	180/82	180	180/82	180/82
Copper Sulfate	All	210/99	250/121	180	210/99	250/121
Corn Oil		180/82	210/99	150	180/82	210/99
Corn Starch	Slurry	210/99		150	210/99	
Corn Sugar	All	230/110				
Cottonseed Oil		210/99	210/99	150	210/99	210/99
Crude Oil, Sour	100	210/99	250/121	150	210/99	250/121
Crude Oil, Sweet	100	210/99	250/121	150	210/99	250/121
Cryogenic Temperatures[6]						
Cyanide Disposal (Hypo)			100/38			
Cyclohexane	100	120/49[7]	150/65[7]		120/49[7]	150/65[7]
D						
DMA 4 Weed Killer 2,4-D (Dimethylamine)		120/49	150/65		120/49	150/65
DMA 6 Weed Killer		120/49	120/49[7]		120/49	120/49
DALAPON grass killer			80/27			
Decanol	100	120/49	180/82			
Deionized Water	100	180/82	180/82	180	180/82	180/82
Demineralized Water	100	180/82	210/99	180	180/82	210/99
Desmut[1]	10	80/27				
Detergents, Organic pH[9,11]	All	180/82	200/93	180	180/82	180/82
Detergents, Organic, pH 12	100	150/65	180/82[11]	150	150/65	180/82
Detergents, Sulfonated[6]	All					
Diallylphthalate	All	180/82	210/99	150		210/99

A blank space in the table indicates no data available at the time temperature ratings were assigned.

NR: **Not Recommended.** Drains, flooring, gratings, and structural supports for walkways and stairways, where exposure is intermittent or is to fumes or spills only, may give good service in those chemical environments shown as NR (not recommended).

[1]Double synthetic veil should be used in inner layer.
[2]Post-cure recommended to increase service life.
[3]Benzoyl peroxide – DMA cure system recommended to increase service life.
[4]Recommended provided that solvent used for dissolution is also recommended.
[5]Satisfactory up to maximum stable temperature for product.

Chemical Environment	% Concentration	Maximum Recommended Temperature, °F/°C				
		DERAKANE 411	DERAKANE 470	DERAKANE 8084	DERAKANE 510A-40 and 530	DERAKANE 510N
Di-ammonium Phosphate	65	210/99	210/99	180	210/99	210/99
Dibromo Phenol		NR	100/38	NR	NR	100/38
Dibutyl Ether	100	180/82	210/99			210/99
Dibutyl Sebacate	All	120/49	150/65		120/65	150/65
Dibutylphthalate	All	180/82	210/99			180/82
Dichlorobenzene	100	NR	120/49	NR	NR	100/38
Dichloroethane[12]	100	NR	80/27	NR	NR	NR
Dichloroethylene	100	NR	NR	NR	NR	NR
Dichloromethane (Methylene Chloride)	100	NR	NR	NR	NR	NR
2, 4-Dichlorophenoxyacetic Acid (Acid, Salts, Esters and Formulations)[4]		120/49	120/49		120/49	120/49
Dichloropropane	100	NR	100/38	NR	NR	80/27
Dichloropropene[12]	100	NR	80/27	NR	NR	NR
Dichlorotoluene	100	80	120/49	NR	80	120
Diesel Fuel	100	180/82	210/99	150	180/82	210/99
Diethanol Amine	100	120/49[7]	120/49[7]		120/48	120/49[7]
Diethyl Benzene	100	100/38	150/65	NR	100/38	150/65
Diethyl Carbonate	100	NR	100/38	NR	NR	80/27
Diethyl Ketone	100	NR	80/27	NR	NR	NR
Diethyl Sulfate	100	100	120/49		100	120/49
Diethyl Glycol	100	180/82	210/99		180/82	210/99
DOWANOL* DB Diethylene Glycol n-butyl ether (See also Butyl CARBITOL)	100	80/27	100/38	NR	80/27	100/38
Diethylhexyl Phosphoric acid (in kerosene)	20	180/82	180/82		180/82	180/82
Diisobutyl Ketone		NR	120/49	NR	NR	120/49
Diisobutyl Phthalate	100	150/65	150/65		150/65	150/65
Diisobutylene	100	100/38	100/38	80	100/38	100/38
Diisopropanol Amine	100	120/49	150/65	100	120/49	150/49
Dimethyl Formamide	100	NR	NR	NR	NR	NR
Dimethyl Morpholine	100	NR	120/49	NR	NR	80/27
Dimethyl Phthalate	100	150/65	180/82		150/65	180/82
Dimethyl Sulfide	100	NR	80/27	NR	NR	80/27
2, 2-Dimethyl Thiazolidine	1	150/65	180/82		150/65	180/82
Dioctyl Phthalate	100	150/65	210/99	150	150/65	210/99

[6]Check with corrosion technical service lab for specific recommendations.
[7]Probably satisfactory at higher temperatures but temperature shown is the highest for which information was available.
[8]Double c-veil and 200 mil corrosion liner should be used.
[9]Double c-veil.
[10]Call for recommendations if sulfuric acid is present.
[11]DERAKANE 470-45 resin is recommended for alkaline and hypo service.
[12]If service is marginal use DERAKANE 470-36 resin.
*Trademark of The Dow Chemical Company

—Continue

Maximum Service Temperature vs Chemical Environment

Chemical Environment	% Concentration	Maximum Recommended Temperature, °F/°C				
		DERAKANE 411	DERAKANE 470	DERAKANE 8084	DERAKANE 510A-40 and 530	DERAKANE 510N
Diphenyl Oxide (Diphenyl Ether, Phenyl Ether)	100	80/27	120/49[7]	NR	80/27	120/49
Dipotassium phosphate	50	100/38	100/38	100		
Dipropylene Glycol	100	180/82	210/99	150	180/82	210/99
Distilled Water	100	180/82	180/82	180	180/82	180/82
Divinyl Benzene	100	100/38	120/49[7]	NR	100/38	120/49
Dodecanol (Lauryl Alcohol)	100	150/65	180/82	120	150/65	180/82
Dodecene	100	150/38	180/82	120	150/38	180/82
Dodecyl Benzene Sulfonic Acid: Sulfuric Acid: Water: Oil	85:10:4:1	150/65	150/65	150	150/65	150/65
Dodecyl Benzene Sulfonic Acid	100	120/49	120/49		120/49	120/49
DOWANOL DB Glycol Ether[12]	100	80/27	100/38	NR	80/27	100/38
DOWANOL EB Glycol Ether (Ethylene Glycol n-butyl ether)	100	100/38	100/38	NR	100/38	100/38
DOWANOL PM Glycol Ether	100	NR	70/21	NR	NR	NR
DOWCLENE* Solvent	120/49	120/49			120/49	
DOWCLENE EC Solvent		100/38	120/49		100/38	120/49
DOWEX* 50WX4 Ion Exchange Resin		210/99	120/99		210/99	210/99
DOWFAX* 2A0 Solution Surfactant	40% Solution	120/49	120/49		120/49	120/49
DOWFAX 2A1 Surfactant	45% Solution	120/49	120/49		120/49	120/49
DOWICIDE* Antimicrobial		120/49	120/49		120/49	120/49
DOWTHERM* Heat Transfer Agent	100	120/49	150/65		120/49	150/65
E						
ECR-34	100	120/49	120/49		120/49	120/49
ELECTROSOL Anti-static Agent	5	150/65	150/65		150/65	150/65
ENDURA-ETCH Solution	100	90/32	90/32	NR	90/32	90/32
Epichlorohydrin	100	NR	80/27	NR	NR	NR
Epoxidized Castor Oil	100	100/38		100		
Epoxidized Soybean Oil	100	150/65	150/65	150	150/65	150/65
ESTERON® 245 Herbicide	100	120/49	150/65	120	120/49	150/65
ESTERON Herbicide	100	120/49	150/65	120	120/49	150/65
Esters, Fatty Acid	100	180/82	180/82	150	180/82	180/82
Ethanol	95	80/27	100/38	NR		80/27

A blank space in the table indicates no data available at the time temperature ratings were assigned.

NR: Not Recommended. Drains, flooring, gratings, and structural supports for walkways and stairways, where exposure is intermittent or is to fumes or spills only, may give good service in those chemical environments shown as NR (not recommended).

[1]Double synthetic veil should be used in inner layer.
[2]Post-cure recommended to increase service life.
[3]Benzoyl peroxide – DMA cure system recommended to increase service life.
[4]Recommended provided that solvent used for dissolution is also recommended.
[5]Satisfactory up to maximum stable temperature for product.

Chemical Environment	% Concentration	Maximum Recommended Temperature, °F/°C				
		DERAKANE 411	DERAKANE 470	DERAKANE 8084	DERAKANE 510A-40 and 530	DERAKANE 510N
Ethanol	50	100/38	150/65	NR	100/38	100/38
Ethanol (Ethyl Alcohol)	10	120/49	150/65	120	120/49	120/49
Ethanolamine[12]	100	NR	80/27	NR	NR	NR
Ethyl Acetate[12]		NR	70/21	NR	NR	NR
Ethyl Acrylate		NR	NR[6]	NR	NR	
Ethyl Alcohol (See Ethanol)						
Ethyl Benzene		80/27	120/49		80/27	100/38
Ethyl Benzene: Benzene	2/3:1/3	NR	100/38	NR	NR	80/27
Ethyl Bromide		NR	NR	NR	NR	NR
Ethyl Chloride	100	NR	80/27	NR	NR	80/27
Ethyl Ether	100	NR	NR	NR	NR	NR
Ethyl Sulfate	100	100/38	100/38	100	100/38	100/38
Ethylene Chlorohydrin	100	100/38	100/38	NR	100/38	100/38
Ethylene Dichloride (See Dichloroethane)	100	NR	80/27	NR	NR	70/21
Ethylene Glycol	All	210/99	210/99		210/99	210/99
Ethylene Glycol Monobutyl Ether	100	100/38	100/38	NR	100/38	100/38
Ethylenediamine tetraacetic acid (See VERSENE* 100)		100/38	100/38	100	100/38	100/38
Eucalyptus Oil	100	140/60	140/60	140		
F						
Fatty Acids	All	210/99	250/121	150	210/99	250/121
Ferric Acetate	Sat'd	180/82	180/82		180/82	180/82
Ferric Chloride	All	210/99	210/99	180	210/99	210/99
Ferric Chloride: Ferrous Chloride	5:20	210/99	210/99	180	210/99	210/99
Ferric Chloride: Ferrous Chloride: Hydrochloric Acid	48:0.2:0.2	180/82	180/82	180	180/82	180/82
Ferric Chloride: Hydrochloric Acid	29:18.5	180/82	180/82	180	180/82	180/82
Ferric Nitrate	All	210/99	210/99	180	210/99	210/99
Ferric Sulfate	All	210/99	210/99	180	210/99	210/99
Ferrous Chloride	All	210/99	210/99	180	210/99	210/99
Ferrous Chloride:	20:5	210/99	210/99	180	210/99	210/99
Ferric Chloride, Ferrous Nitrate	All	210/99	210/99	180	210/99	210/99

[6]Check with corrosion technical service lab for specific recommendations.
[7]Probably satisfactory at higher temperatures but temperature shown is the highest for which information was available.
[8]Double c-veil and 200 mil corrosion liner should be used.
[9]Double c-veil.
[10]Call for recommendations if sulfuric acid is present.
[11]DERAKANE 470-45 resin is recommended for alkaline and hypo service.
[12]If service is marginal use DERAKANE 470-36 resin.
*Trademark of The Dow Chemical Company

– Continued

Maximum Service Temperature vs Chemical Environment

Chemical Environment	% Concentration	Maximum Recommended Temperature, °F/°C				
		DERAKANE 411	DERAKANE 470	DERAKANE 8084	DERAKANE 510A-40 and 530	DERAKANE 510N
Ferrous Sulfate	All	210/99	210/99	180	210/99	210/99
Fertilizer, URAN Ureaammonium nitrate composition: 43.3% Ammonium nitrate, 35.4% Urea, 20.3% Water		120/49	120/49	120	120/49	120/49
8-8-8 Fertilizer Composition (Parts by wt.—30 phosphoric acid; 29 ammonia, 104.3 water, 10.4 Uran, 26.0 potash, 3.0 Borax pH 8.2		120/49	120/49	120	120/49	120/49
Flour		Amb				
Flue Gas[6]		325	400/204[7]		325	350/177
Fluoboric Acid[1]	All	210/99	210/99	150	210/99	210/99
Fluoride Salts + Hydrochloric Acid[1]	30:10	120/49	120/49	120	120/49	120/49
Fluorine Gas[1]		Amb	Amb	Amb	Amb	Amb
Fluosilicic Acid[1]	10	180/82	180/82	150	180/82	180/82
Fluosilicic Acid[1]	25	100/38	100/38	100	100/38	100/38
Fluosilicic Acid[1]	35	100/38	100/38	100	100/38	100/38
Fluosilicic Acid Fumes[1]		180/82	180/82	150	180/82	
Fly Ash Slurry		150/65	150/65	150	150/65	150/65
Formaldehyde	44	150/65	150/65		150/65	150/65
Formaldehyde[5]	All	150/65	150/65		150/65	150/65
Formic Acid	10	180/82	180/82	150	180/82	180/82
Formic Acid	98		100/38			
FOSTERGE Products		100/38	100/38			
FREON 11 Solvent		100/38	100/38		100/38	100/38
FREON Products (Call for Recommendation)						
Fuel Oil	100	180/82	210/99	150	180/82	210/99
Furfural	100	NR	NR	NR	NR	NR
Furfural Alcohol[12]	100	NR	80/27	NR	NR	NR
G						
GALECRON 4EC Insecticide	100	80/27	120/49		80/27	120/49
Gallic Acid	Sat'd		100/38	NR		
Gasoline, Leaded	100	180/82	180/82	150	180/82	180/82
Gasohol (20% Methanol)	100			NR		
Gasoline, Aviation	100	180/82	180/82	150	180/82	180/82
Gasoline, No Lead, No Methanol	100	120/49	150/65		120/49	150/65

A blank space in the table indicates no data available at the time temperature ratings were assigned.

NR: Not Recommended. Drains, flooring, gratings, and structural supports for walkways and stairways, where exposure is intermittent or is to fumes or spills only, may give good service in those chemical environments shown as NR (not recommended).

[1]Double synthetic veil should be used in inner layer.
[2]Post-cure recommended to increase service life.
[3]Benzoyl peroxide—DMA cure system recommended to increase service life.
[4]Recommended provided that solvent used for dissolution is also recommended.
[5]Satisfactory up to maximum stable temperature for product.

Chemical Environment	% Concentration	Maximum Recommended Temperature, °F/°C				
		DERAKANE 411	DERAKANE 470	DERAKANE 8084	DERAKANE 510A-40 and 530	DERAKANE 510N
Gluconic Acid	50	180/82	180/82	150	180/82	180/82
Glucose	100	210/99	250/121	150	210/99	250/121
Gluteraldehyde	50	120/49[7]	120/49[7]	120	120/49[7]	120/49[7]
Gluteric Acid	50	120/49	120/49		120/49	120/49
Glycerine	100	210/99	210/99	150	210/99	210/99
Glycol	All	210/99	210/99	150	210/99	210/99
Glycolic Acid (Hydroxy acetic)	70	100/38	100/38		100/38	100/38
Glyoxal	40	100/38	100/38		100/38	100/38
Gold Plating Solution (23% Potassium Ferrocyanide with Potassium Gold Cyanide and Sodium Cyanide)		100/82	100/82	100	100/82	100/82
GOODRITE K702 Product		100/38				
GOODRITE K732 Product		100/38				
H						
Hard Chrome Plating Baths	100	140/60	210/99	180	210/99	210/99
n-Heptane		210/99	120/49	120	120/49	120/49
Herbicides[6]	100	120/49	120/49	NR	NR	NR
Hexachloroethane[12]		NR				
Hexamethylenetetramine	40	100/38	120/49		100/38	120/49
Hexane	100	160/71	160/71		160/71	160/71
Hot Stack Gas[6]			400/204[7]			350/177
Hydraulic Fluid	100	180/82	180/82	NR	180/82	180/82
Hydrazine	100	NR	NR		NR	NR
Hydriodic Acid	40	150/65	150/65	150	150/65	150/65
Hydrobromic Acid	18	180/82	180/82	180	180/82	180/82
Hydrobromic Acid	25	180/82	180/82	180	180/82	180/82
Hydrobromic Acid	48	150/65	150/65	150	150/65	150/65
Hydrobromic Acid	62	100/38	100/38	100	100/38	100/38
Hydrocarbons[6]	10	180/82	230/110	180	210/99	230/110
Hydrochloric Acid	15	180/82	230/110	180	210/99	230/110
Hydrochloric Acid[9]	20	180/82	230/110	180	210/99	230/110
Hydrochloric Acid[9]	37	150/65	180/82	150	180/82	180/82
Hydrochloric Acid[9]		NR	Up to 150/65	NR		
Hydrochloric Acid & Organics[6,8]						

[6]Check with corrosion technical service lab for specific recommendations.
[7]Probably satisfactory at higher temperatures but temperature shown is the highest for which information was available.
[8]Double c-veil and 200 mil corrosion liner should be used.
[9]Double c-veil.
[10]Call for recommendations if sulfuric acid is present.
[11]DERAKANE 470-45 resin is recommended for alkaline and hypo service.
[12]If service is marginal use DERAKANE 470-36 resin.
*Trademark of The Dow Chemical Company

—Conti

Maximum Service Temperature vs Chemical Environment

Chemical Environment	% Concentration	Maximum Recommended Temperature, °F/°C				
		DERAKANE 411	DERAKANE 470	DERAKANE 8084	DERAKANE 510A-40 and 530	DERAKANE 510N
Hydrochloric Acid + Free Chlorine[9]	All	180/82	230/110	180	180/82	230/110
Hydrochloric Acid, Fumes + Free Chlorine[8]			350/177			350/177
Hydrochloric Acid, Fumes[9]		210/99	350/177	180	210/99	350/177
Hydrocyanic Acid	All	210/99	210/99	180	210/99	210/99
Hydrofluoric Acid[1]	10	150/65	150/65	150	150/65	150/65
Hydrofluoric Acid[1]	20	100/38	100/38	100	100/38	100/38
Hydrofluosilic Acid[1]	10	180/82	180/82	180	180/82	180/82
Hydrofluosilic Acid[1]	25	100/38	100/38	100	100/38	100/38
Hydrofluosilic Acid[1]	35	100/38	100/38	100	100/38	100/38
Hydrogen Bromide, wet gas	100	180/82	180/82	180	180/82	180/82
Hydrogen Chloride, dry gas[6]	100	210/99	350/177	180	210/99	350/177
Hydrogen Chloride, wet gas[6]	100	210/99	350/177	180	210/99	350/177
drogen Fluoride, vapor[1]		180/82	180/82	180	180/82	180/82
Hydrogen Peroxide	30	150/65	150/65	150	150/65	150/65
Hydrogen Sulfide	5%	180/82	350/177		180/82	350/177
Hydrogen Sulfide	100%	180/82	210/99			210/99
Hydrosulfite Bleach—aqueous solution containing 5% zinc hydrosulfite and 2.5% tripolyphosphate[5]		180/82	180/82	180	180/82	180/82
Hydroxyacetic Acid (Glycolic Acid)	70	100/38	100/38[7]		100/38	100/38
Hypochlorous Acid[6]						
Hypophosphorous Acid	50	120/49	120/49	120	120/49	120/49
I						
Incinerator Gases[6]			350/177		325/163	350/177
Insecticides[6]		120/49	120/49		120/49	120/49
Iodine, Crystals	100	150/65	150/65	150	150/65	150/65
Iodine, Vapor	100	150/65	180/82	150	150/65	150/65
Iron Plating Solution 45% $FeCl_2$; 15% $CaCl_2$; 20% $FeSO_4$; 11% $(NH_4)_2SO_4$	100	180/82	250/121	180	180/82	250/121
Iron and Steel Cleaning Bath, 9% Hydrochloric; 23% Sulfuric		180/82	210/99	180	180/82	210/99
Isoamyl Alcohol	100	120/49	120/49		120/49	120/49
Isobutyl Alcohol	100	120/49	120/49	NR	120/49	120/49
Isodecanol		120/49[7]	120/49[7]		120/49[7]	120/49
Isononyl alcohol	100	150/65	150/65		150/65	150/65

A blank space in the table indicates no data available at the time temperature ratings were assigned.

[1]R: **Not Recommended.** Drains, flooring, gratings, and structural supports for walkways and stairways, where exposure is intermittent or is to fumes or spills only, may give good service in those chemical environments shown as NR (not recommended).

[1]Double synthetic veil should be used in inner layer.
[2]Post-cure recommended to increase service life.
[3]Benzoyl peroxide—DMA cure system recommended to increase service life.
[4]Recommended provided that solvent used for dissolution is also recommended.
[5]Satisfactory up to maximum stable temperature for product.

Chemical Environment	% Concentration	Maximum Recommended Temperature, °F/°C				
		DERAKANE 411	DERAKANE 470	DERAKANE 8084	DERAKANE 510A-40 and 530	DERAKANE 510N
Isooctyl Adipate	100	120/49	150/65	100	120/49	
Isooctyl Alcohol	100	150/65	150/65	120	150/65	150/65
Isopropyl Alcohol	All	120/49	120/49	NR	120/49	120/49
Isopropyl Amine	100	120/49	120/49[7]	NR	120/49	120/49[7]
Isopropyl Myristate	100	210/99	230/110	150		230/110
Isopropyl Palmitate	100	210/99	230/110	150	210/99	230/110
Itaconic Acid	25	120/49	120/49	100	120/49	120/49
J						
Jet Fuel (JP-4)	100	180/82	180/82	150	180/82	180/82
K						
Kerosene	100	180/82	180/82	150	180/82	180/82
Kerosene, Diethylhexyl Phosphoric Acid (DEHPA), Trioctyl Phosphine Oxide (TOPO)		180/82	180/82	150	180/82	180/82
Kraft Recovery Boiler Breeching			350/177		300/149	350/177
L						
Lactic Acid	All	210/99	210/99	150	210/99	210/99
LASSO Herbicide			120/49			
Latex		120/49	120/49[7]	120	120/49	120/49
Lauroyl Chloride		100/38	120/49		100/38	120/49
Lauryl Alcohol	100	150/65	180/82	100	150/65	180/82
Lauryl Chloride	100	210/99	210/99	150	210/99	210/99
Lauryl Chloride, Crude, Acidic	100	210/99	210/99	150	210/99	210/99
Lauryl Mercaptan	All		150/65			150/65
Lead Acetate	All	210/99	230/110		210/99	230/110
Levulinic Acid	All	210/99	230/110		210/99	230/110
Linseed Oil	100	210/99	230/110	150	210/99	230/110
Lithium Bromide	Sat'd	210/99	250/121	180	210/99	
Lithium Carbonate[1]	Sat'd	180/82	180/82	180	180/82	180/82
Lithium Chloride	Sat'd	210/99	210/99	180	210/99	210/99
Lithium Hydroxide[1]	Sat'd	180/82	180/82	180	180/82	180/82
Lithium Hypochlorite[1,2,3]	All	150/65	180/82	150	150/65	150/65
Low temperatures[6]						
M						
Magnesium Bisulfite	All	180/82	180/82	180	180/82	180/82

[6]Check with corrosion technical service lab for specific recommendations.
[7]Probably satisfactory at higher temperatures but temperature shown is the highest for which information was available.
[8]Double c-veil and 200 mil corrosion liner should be used.
[9]Double c-veil.
[10]Call for recommendations if sulfuric acid is present.
[11]DERAKANE 470-45 resin is recommended for alkaline and hypo service.
[12]If service is marginal use DERAKANE 470-36 resin.
*Trademark of The Dow Chemical Company

– Continue

Maximum Service Temperature vs Chemical Environment

Chemical Environment	% Concentration	Maximum Recommended Temperature, °F/°C				
		DERAKANE 411	DERAKANE 470	DERAKANE 8084	DERAKANE 510A-40 and 530	DERAKANE 510N
Magnesium Carbonate	All	180/82	180/82	180	180/82	180/82
Magnesium Chloride	All	210/99	250/121	180	210/99	250/121
Magnesium Fluosilicate[1]	All	180/82	210/99	180		180/82
Magnesium Hydroxide	100	210/99	210/99	180	210/99	210/99
Magnesium Nitrate	All	210/99	210/99	180	210/99	210/99
Magnesium Phosphate	All	120/49		120		
Magnesium Sulfate	All	210/99	250/121	180	210/99	250/121
MAGNIFLOC 500 Series Products	All	140/60	140/60		140/60	
MAGNIFLOC 837A Products	All	150/65	150/65		150/65	150/65
Maleic Acid	100	210/99	250/121	150	210/99	250/121
Manganese Chloride (Manganous Chloride)	All	210/99	210/99	180	210/99	210/99
Manganese Sulfate (Manganous Sulfate)	All	210/99	210/99	180	210/99	210/99
Mercaptoacetic Acid	All	NR	100/38	NR	NR	80/27
Mercuric Chloride	100	210/99	210/99	180	210/99	210/99
Mercurous Chloride	All	210/99	210/99	180	210/99	210/99
Mercury	100	210/99	250/121	150	210/99	250/121
Methyl Alcohol (Methanol)	100	NR	100/38	NR	NR	NR
Methyl Bromide (Gas)	10	80/27	80/27	NR	80/27	80/27
Methyl Ethyl Ketone[6,12]	100	NR	70/21	NR	NR	NR
Methyl Styrene (Alpha)	100	80/27	120/49	NR	80/27	100/38
Methylene Chloride	100	NR	NR	NR	NR	NR
Milk	100	210/99				
Mineral Oils	100	210/99	250/121	150	210/99	250/121
Molasses	100	120/49				
Molybdenum Disulfide (Manufacturing)		200/93		150		
Monochloroacetic Acid[6]	80	NR	NR	NR	NR	NR
Monochloroacetic Acid[6]	100	NR	NR	NR	NR	NR
Monochlorobenzene	100	NR	100/38	NR	NR	80/27
Monoethanolamine (See Ethanolamine)						
Monomethylhydrazine	100	NR	NR	NR	NR	NR
Morpholine[12]	100	NR	80/27	NR	NR	NR
Motor Oil		210/99	250/121	150	210/99	250/121

A blank space in the table indicates no data available at the time temperature ratings were assigned.

NR: **Not Recommended.** Drains, flooring, gratings, and structural supports for walkways and stairways, where exposure is intermittent or is to fumes or spills only, may give good service in those chemical environments shown as NR (not recommended).

[1]Double synthetic veil should be used in inner layer.
[2]Post-cure recommended to increase service life.
[3]Benzoyl peroxide – DMA cure system recommended to increase service life.
[4]Recommended provided that solvent used for dissolution is also recommended.
[5]Satisfactory up to maximum stable temperature for product.

Chemical Environment	% Concentration	Maximum Recommended Temperature, °F/°C DERAKANE 411	DERAKANE 470	DERAKANE 8084	DERAKANE 510A-40 and 530	DERAKANE 510N
Muriatic Acid (See Hydrochloric Acid)						
Myristic Acid	100	210/99	250/121	150	210/99	250/121
N						
Naphtha	100	180/82	210/99		180/82	210/99
Naphtha, Heavy Aromatic[12]			120/49			120/49
Naphthalene	100	210/99	210/99		210/99	210/99
Neutralizer & Desmut		150/65	150/65		150/65	150/65
Nickel Chloride	All	210/99	210/99	180	210/99	210/99
Nickel Nitrate	All	210/99	210/99	180	210/99	210/99
Nickel Plating Solution #1 (11% Nickel Sulfate: 2% Nickel Chloride: 1% Boric Acid)		180/82	180/82	180	180/82	180/82
Nickel Plating Solution #2 (44% Nickel Sulfate: 4% Ammonium Chloride: 4% Boric Acid)		180/82	180/82	180	180/82	180/82
Nickel Sulfate	All	210/99	210/99	180	210/99	210/99
Nitric Acid	5	150/65	180/82	150	150/65	180/82
Nitric Acid	20	120/49	150/65	120	120/49	150/65
Nitric Acid	40	NR	80/27	NR	NR	NR
Nitric Acid Fumes		180/82	180/82	180	180/82	180/82
Nitric/Hydrofluoric Acid[1,6]	8/5	100/38	140/60	100		
Nitrobenzene	100	NR	100/38	NR	NR	80/27
Non-Condensable Blow-Down Gases[6]			250/121			250/121
O						
OAKITE Rust Stripper		180/82	180/82		180/82	180/82
Octanoic Acid (Caprylic Acid)	100	180/82	210/99	150	180/82	210/99
Oil, Sour Crude	100	210/99	210/99	150	210/99	210/99
Oil Sweet Crude	100	210/99	210/99	150		210/99
Oleic Acid	All	210/99	200/93	150	210/99	
Oleum (Fuming sulfuric)		NR	NR	NR	NR	NR
Olive Oils	100	210/99	250/121		210/99	250/121
Oxalic Acid	All	210/99	210/99	150	210/99	210/99
Ozone		200/93	220/104	180	200/93	220/104

[6]Check with corrosion technical service lab for specific recommendations.
[7]Probably satisfactory at higher temperatures but temperature shown is the highest for which information was available.
[8]Double c-veil and 200 mil corrosion liner should be used.
[9]Double c-veil.
[10]Call for recommendations if sulfuric acid is present.
[11]DERAKANE 470-45 resin is recommended for alkaline and hypo service.
[12]If service is marginal use DERAKANE 470-36 resin.
*Trademark of The Dow Chemical Company

—Contin.

Chemical Environment	% Concentration	Maximum Recommended Temperature, °F/°C				
		DERAKANE 411	DERAKANE 470	DERAKANE 8084	DERAKANE 510A-40 and 530	DERAKANE 510N
P						
Palmitic Acid	100	210/99	250/121	150	210/99	250/121
Paper Mill Effluent[6]		140/60				
Peanut Oil	100	180/82				
Pentanedioic Acid (See Gluteric Acid)	50	120/49	120/49	120	120/49	120/49
Perchloric Acid	10	150/65	150/65	150	150/65	150/65
Perchloric Acid	30	100/38	100/38	100	100/38	100/38
Perchloroethylene	100	80/27	120/49	NR	80/27	120/49
Peroxide Beach— aqueous solution containing: 2% sodium peroxide 96%, 0.025% epsom salts, 5.0% sodium silicate 42°Be, 1.4% sulfuric acid 66°Be		210/99	210/99		210/99	210/99
Phenol (Carbolic Acid)	5		120/49	NR		
Phenol	88	NR	70/21	NR	NR	NR
Phenol Formaldehyde Resin	All	100/38	120/49			
Phenol Sulfonic Acid	65	NR	80/27	NR	NR	NR
Phosphoric Acid	85	210/99	210/99	180	210/99	210/99
Phosphoric Acid	100	210/99	210/99	180	210/99	210/99
Phosphoric Acid (Super-phosphoric acid 76% P_2O_5)	105	210/99	210/99	180	210/99	210/99
Phosphoric Acid (Polyphosphoric Acid)	115	210/99	210/99	180	210/99	210/99
Phosphoric Acid with Phosphorous Pentoxide, Hydrochloric Acid and Sulfuric Dioxide	Fumes	210/99	230/110	180	210/99	230/110
Phosphoric Acid, vapor and condensate	100	210/99	250/121	180	210/99	250/121
Phosphoric Acid: Hydrochloric Acid, Sat'd with Cl_2	15:9	210/99	210/99	180	210/99	210/99
Phosphorous Acid	70	100/38	100/38	100	100/38	100/38
Phosphorous Trichloride		NR	NR	NR	NR	NR
Phthalic Acid	All	210/99	210/99		210/99	210/99
Picric Acid (alcoholic)	10	NR	100/38	NR	NR	NR

A blank space in the table indicates no data available at the time temperature ratings were assigned.

NR: Not Recommended. Drains, flooring, gratings, and structural supports for walkways and stairways, where exposure is intermittent or is to fumes or spills only, may give good service in those chemical environments shown as NR (not recommended).

[1]Double synthetic veil should be used in inner layer.

[2]Post-cure recommended to increase service life.

[3]Benzoyl peroxide – DMA cure system recommended to increase service life.

[4]Recommended provided that solvent used for dissolution is also recommended.

[5]Satisfactory up to maximum stable temperature for product.

Chemical Environment	% Concentration	Maximum Recommended Temperature, °F/°C				
		DERAKANE 411	DERAKANE 470	DERAKANE 8084	DERAKANE 510A-40 and 530	DERAKANE 510N
Pine Oil[7]	100	NR	120/49	NR	NR	180/82
Plating Chemicals[6]		180/82	180/82	180	180/82	
Platinum Plating Solution			100/38	NR		150/65
Polyacrylamide	12	150/65	150/65	180	150/65	210/99
Polyethylene Imine		210/99	210/99		210/99	120/49
Polyphosphoric Acid 115% H_3PO_4		120/49	120/49		120/49	
Polyvinyl Acetate Adhesives				100		
Polyvinyl Alcohol	All	100/38	120/49		120/49	120/49
Polyvinyl Chloride Latex with 35 parts DOP			120/49	NR	210/99	250/121
Potassium Aluminum Sulfate	All	120/49	250/121	180	150/65	150/65
Potassium Bicarbonate[1]	10	210/99	150/65	150	180/82	180/82
Potassium Bicarbonate[1]	50	150/65	180/82	180		
Potassium Bromide	All	180/82	120/49	100	150/65	150/65
Potassium Carbonate[1]	10	100/38	150/65	150		
Potassium Carbonate[1]	25	150/65	150/65	150	150/65	150/65
Potassium Carbonate[1]	50	150/65	180/82	180	180/82	180/82
Potassium Chloride	All	180/82	210/99	180	210/99	210/99
Potassium Dichromate	All	210/99	210/99	180	210/99	210/99
Potassium Ferricyanide	All	210/99	210/99	180	210/99	210/99
Potassium Ferrocyanide	All	210/99	210/99	180	210/99	210/99
Potassium Gold Cyanide	12	100/38	100/38	100	100/38	100/38
Potassium Hydroxide[1]	10	150/65	150/65[11]	150	150/65	150/65
Potassium Hydroxide[1]	25	150/65	150/65[11]	150	150/65	150/65
Potassium Hydroxide[1]	45	180/82	180/82[11]	180	180/82	180/82
Potassium Hydroxide: Potassium Cyanide: Copper Cyanide[1]	2:3:8 oz/gal	180/82	180/82[11]	180	180/82	180/82
Potassium Iodide	All	120/49	150/65	120	210/99	210/99
Potassium Nitrate	All	210/99	210/99	180		
Potassium Oxalate	All	150/65		150	210/99	210/99
Potassium Permanganate	All	210/99	210/99	180	210/99	210/99
Potassium Persulfate	All	210/99	210/99	180	210/99	210/99
Potassium Pyrophosphate	All	130/54	150/65	130	130/54	150/65
Potassium Silicofluoride[1]	60	100/38	100/38	100		
Potassium Sulfate	All	210/99	210/99	180	210/99	210/99
Propionic Acid	50	180/82	180/82	180	180/82	180/82

[6]Check with corrosion technical service lab for specific recommendations.
[7]Probably satisfactory at higher temperatures but temperature shown is the highest for which information was available.
[8]Double c-veil and 200 mil corrosion liner should be used.
[9]Double c-veil.
[10]Call for recommendations if sulfuric acid is present.
[11]DERAKANE 470-45 resin is recommended for alkaline and hypo service.
[12]If service is marginal use DERAKANE 470-36 resin.
*Trademark of The Dow Chemical Company

—Continu

Maximum Service Temperature vs Chemical Environment

Chemical Environment	% Concentration	Maximum Recommended Temperature, °F/°C				
		DERAKANE 411	DERAKANE 470	DERAKANE 8084	DERAKANE 510A-40 and 530	DERAKANE 510N
Propionic Acid	100	NR	100/38	NR	NR	80/27
Propylene Glycol	All	210/99	210/99		210/99	210/99
Pulp Paper Mill Blow Down (Non-Condensable Gases)[8]		250	250/121		250/121	250/121
PURIFLOC* C-41 Flocculant		100/38				
Pyridine	100	NR	NR	NR	NR	NR
Q						
Quaternary Amine Salts		120/49	150/65	120	120	150
R						
Radiation Resistance[6]						
Rayon Spin Bath			140/60			
Rayon Spinning	Fumes	140	140		140/60	140/60
Recovery Boiler Gases			350/177			350/177
Red Liquor	All	120/49	150/65	120	150/65	150/65
S						
Salicylic Acid	100	140/60				
Salt Brine	30	210/99	250/121	180		
Sea Water		180	210/99	180	180	210
Selenious Acid	All	210/99	210/99	180	210/99	210/99
SEPARAN* CP-7 Flocculant		100/38	100/38		100	100
Silver Nitrate	All	210/99	210/99		210/99	210/99
Silver Plating Solution, 4% Silver; 7% Potassium and 5% Sodium Cyanides; 2% Potassium Carbonate		180/82	180/82	180	180/82	180/82
Sodium Acetate	All	210/99	210/99		210/99	210/99
Sodium Alkyl Aryl Sulfonates	All	180/82	180/82	150	180/82	180/82
Sodium Aluminate	All	120/49	120/49	120	120/49	120/49
Sodium Benzoate	100	180/82	180/82	180	180/82	180/82
Sodium Bicarbonate[1]	10	180/82	180/82	180	180/82	180/82
Sodium Bicarbonate[1]	Sat'd	180/82	180/82	180	180/82	180/82
Sodium Bicarbonate: Sodium Carbonate[1]	15:20	180/82	180/82	180	180/82	180/82
Sodium Bifluoride[1]	All	120/49		120		

A blank space in the table indicates no data available at the time temperature ratings were assigned.

1: **Not Recommended.** Drains, flooring, gratings, and structural supports for walkways and stairways, where exposure is intermittent or is to fumes or spills only, may give good service in those chemical environments shown as NR (not recommended).

[1]Double synthetic veil should be used in inner layer.
[2]Post-cure recommended to increase service life.
[3]Benzoyl peroxide – DMA cure system recommended to increase service life.
[4]Recommended provided that solvent used for dissolution is also recommended.
[5]Satisfactory up to maximum stable temperature for product.

Chemical Environment	% Concentration	Maximum Recommended Temperature, °F/°C				
		DERAKANE 411	DERAKANE 470	DERAKANE 8084	DERAKANE 510A-40 and 530	DERAKANE 510N
Sodium Bisulfate	All	210/99	210/99	180	210/99	210/99
Sodium Bisulfite	Sat'd	210/99	210/99	180	210/99	210/99
Sodium Borate	Sat'd	210/99	210/99	180	210/99	210/99
Sodium Borohydride SWS (Stabilized Water Solution)	Sat'd	100/38				
Sodium Bromate	5	140/60	150/65	140	140/60	150/65
Sodium Bromide	All	210/99	210/99	180	210/99	210/99
Sodium Carbonate[1]	10	180/82	180/82	180	180/82	180/82
Sodium Carbonate[1]	25	180/82	180/82	180	180/82	180/82
Sodium Carbonate[1]	32	180/82	180/82	180	180/82	180/82
Sodium Carbonate[1]	35	180/82	180/82	180	180/82	180/82
Sodium Carbonate: Sodium Bicarbonate[1]	20:15	180/82	180/82	180	180/82	180/82
Sodium Chlorate	50	210/99	210/99	180	210/99	210/99
Sodium Chlorate	100	235/113	235/113	180	235/113	235/113
Sodium Chlorate: Sodium Chloride	3.2M:3.4M	210/99	210/99	180	210/99	210/99
Sodium Chloride, pH 10.5, Cl_2 Sat'd	Sat'd	200/93	200/93	180	200/93	200/93
Sodium Chloride, pH 11, Some Cl_2	Sat'd	180/82	210/99	180	180/82	210/99
Sodium Chloride: Sodium Chlorate	3.4M:3.2M	210/99	210/99		210/99	210/99
Sodium Chlorite	10	150/65	150/65	150	150/65	150/65
Sodium Chlorite	50	100/38	120/49	100	100/38	100/38
Sodium Chromate	50	210/99	210/99	180	210/99	210/99
Sodium Cyanide	All	210/99	210/99		210/99	210/99
Sodium Dichromate	100	210/99	210/99	180	210/99	210/99
Sodium Di-phosphate	100	210/99	210/99	180	210/99	210/99
Sodium Dodecylbenzene-sulfonate		160/71	160/71		160/71	160/71
Sodium Ferricyanide	All	210/99	210/99		210/99	210/99
Sodium Ferrocyanide	All	210/99	210/99	180	210/99	210/99
Sodium Fluoride[1]	All	180/82	180/82	180	180/82	180/82
Sodium Fluoro Silicate[1]	All	120/49	120/49	120	120/49	120/49
Sodium Hexametaphosphate	10	100/38	100/38	100	100/38	100/38
Sodium Hydrosulfide	All	180/82	180/82	180	180/82	180/82

[6]Check with corrosion technical service lab for specific recommendations.
[7]Probably satisfactory at higher temperatures but temperature shown is the highest for which information was available.
[8]Double c-veil and 200 mil corrosion liner should be used.
[9]Double c-veil.
[10]Call for recommendations if sulfuric acid is present.
[11]DERAKANE 470-45 resin is recommended for alkaline and hypo service.
[12]If service is marginal use DERAKANE 470-36 resin.
*Trademark of The Dow Chemical Company

—Continu

Maximum Service Temperature vs Chemical Environment

Chemical Environment	% Concentration	Maximum Recommended Temperature, °F/°C				
		DERAKANE 411	DERAKANE 470	DERAKANE 8084	DERAKANE 510A-40 and 530	DERAKANE 510N
Sodium Hydroxide[1,2]	5	180/82	180/82[11]	180	180/82	180/82
Sodium Hydroxide[1,2]	10	180/82	180/82[11]	180	180/82	180/82
Sodium Hydroxide[1,2]	25	180/82	180/82[11]	180		
Sodium Hydroxide[1,2]	50	210/99	210/99[11]	180	180/82	180/82
Sodium Hypochlorite[1,2,3,6]	5¼	150/65	180/82[11]	150	120/49	150/65
Sodium Hypochlorite[1,2,3,6]	10	180/82	180/82[11]	180	120/49	150/65
Sodium Hypochlorite[1,2,3,6]	18	180/82	180/82[11]	180	120/49	150/65
Sodium Hypochlorite, 5%[1,2,3,6] NaOh Scrubbing Cl_2 ClO_2		120/49	120/49[11]	120	120/49	120/49
Sodium Lauryl Sulfate	All	160/71	160/71		160/71	160/71
Sodium Mono-phosphate	All	210/99	210/99	180	210/99	210/99
Sodium Nitrate	All	210/99	210/99	180	210/99	210/99
Sodium Nitrate	All	210/99	210/99	180	210/99	210/99
Sodium Oxalate	Sat'd	210/99	210/99			
Sodium Persulfate	20	130/54		130		
Sodium Phosphate	10	210/99	210/99	180	210/99	210/99
Sodium Phosphate Tri	All	210/99	210/99	180	210/99	210/99
Sodium Polyacrylate, pH 9-10.5	25	180/82	180/82		180/82	180/82
Sodium Silicate	All	210/99	210/99	180		
Sodium Sulfate	All	210/99	210/99	180	210/99	210/99
Sodium Sulfhydrate (See Sodium Hydrosulfide)						
Sodium Sulfide	All	210/99	210/99	180	210/99	210/99
Sodium Sulfite	All	210/99	210/99	180	210/99	210/99
Sodium Tartrate	All	210/99	210/99	180	210/99	210/99
Sodium Tetraborate	Sat'd	180/82	180/82	180	180/82	180/82
Sodium Thiocyanate	57	180/82	180/82	180	180/82	180/82
Sodium Thiosulfate	All	180/82	180/82	180	180/82	180/82
Sodium Tripolyphosphate	Sat'd	210/99	210/99	180	210/99	210/99
Sodium Xylene Sulfonate	All	160/71	160/71		160/71	160/71
Solder Plate		150/65	150/65	150	150/65	150/65
Solvent Composite — 35% Xylene 35% Kerosene 30% di-2 ethyl hexyl phosphoric acid		100/38	150/65	NR	100/38	150/65

A blank space in the table indicates no data available at the time temperature ratings were assigned.

NR: Not Recommended. Drains, flooring, gratings, and structural supports for walkways and stairways, where exposure is intermittent or is to fumes or spills only, may give good service in those chemical environments shown as NR (not recommended).

[1]Double synthetic veil should be used in inner layer.
[2]Post-cure recommended to increase service life.
[3]Benzoyl peroxide – DMA cure system recommended to increase service life.
[4]Recommended provided that solvent used for dissolution is also recommended.
[5]Satisfactory up to maximum stable temperature for product.

Chemical Environment	% Concentration	Maximum Recommended Temperature, °F/°C				
		DERAKANE 411	DERAKANE 470	DERAKANE 8084	DERAKANE 510A-40 and 530	DERAKANE 510N
Solvent Extraction Solutions		180/82	180/82		180/82	180/82
4% Trioctylphosphine oxide (TOPO)						
4% Diethyl Hexyl Phosphoric Acid (DEHPA)						
92% Kerosene						
Solvent Extraction Solutions		180/82	180/82		180/82	180/82
3% Isodecanol						
6% ALAMINE 336'						
91% Kerosene						
SORBITOL Solutions	All	160/71	180		160/71	160/71
Sour Crude Oil	100	210/99	250/121	150	210/99	250/121
Soy Sauce		100/38				
Soya Oil	100	210/99	210/99	150	210/99	210/99
Spearmint Oil		100/38				
Stannic Chloride	All	210/99	210/99	180	210/99	210/99
Stannous Chloride	All	210/99	210/99	180	210/99	210/99
Steam		210	220/104			220/104
Stearic Acid	All	210/99	210/99	150	210/99	210/99
Styrene	100	NR	120/49	NR	NR	100/38
Styrene Acrylic Emulsion		100/38	120/49	NR	100/38	120/49
Styrene Butadiene Latex		130/54		100		
Succinonitrile, Aqueous		80/27	100/38	NR	80/27	100/38
Sugar, Beet, Liquor		180/82	180/82		180/82	180/82
Sugar, Cane, Liquor & Sweetwater	All	180/82	180/82		180/82	180/82
Sugar/Sucrose	All	210/99	210/99		210/99	210/99
Sulfamic Acid	10	210/99	210/99	180		210/99
Sulfamic Acid	25	150/65	150/65	150		
Sulfanilic Acid	All	210/99	210/99	180	210/99	210/99
Sulfate Process Non-Condensable Gases			250/121			250/121
Sulfated Detergents[6]						
Sulfite/Sulfate Liquors (Pulp Mill)		200/93	200/93	180	200/93	200/82
Sulfonated Detergents	100	160/71	180/82	160	160/71	180/82
Sulfur Chloride	Fumes	200/94	200/94	180	200/94	200/94

[6]Check with corrosion technical service lab for specific recommendations.
[7]Probably satisfactory at higher temperatures but temperature shown is the highest for which information was available.
[8]Double c-veil and 200 mil corrosion liner should be used.
[9]Double c-veil.
[10]Call for recommendations if sulfuric acid is present.
[11]DERAKANE 470-45 resin is recommended for alkaline and hypo service.
[12]If service is marginal use DERAKANE 470-36 resin.
*Trademark of The Dow Chemical Company

—Continued

Maximum Service Temperature vs Chemical Environment

Chemical Environment	% Concentration	Maximum Recommended Temperature, °F/°C				
		DERAKANE 411	DERAKANE 470	DERAKANE 8084	DERAKANE 510A-40 and 530	DERAKANE 510N
Sulfur Dioxide (dry or wet)		210/99	250/121	180	210/99	210/99
Sulfur Dioxide Burner, Wet Gas		210	350/177	180	210	350/177
Sulfur, Molten			300/149			250/121
Sulfur Trioxide		210/99	300/149	180	210/99	210/99
Sulfur, Wettable, Fungicide[4]		180/82	180/82	180	180/82	180/82
Sulfuric Acid	25	210/99	210/99	180	210/99	210/99
Sulfuric Acid	70	180/82	180/82	180	180/82	180/82
Sulfuric Acid	75	100/38	120/49	100	100/38	100/38
Sulfuric Acid	93	NR	NR	NR	NR	NR
Sulfuric Acid, Vapor		210/99	350/177	180	210/99	350/177
Sulfuric Acid: Ferrous Sulfate	10:Sat'd	210/99	210/99	180	210/99	210/99
Sulfuric Acid: Phosphoric Acid	10:20	180/82	180/82	180	180/82	180/82
Sulfurous Acid	10	120/49	120/49	120	120/49	120/49
Superphosphoric Acid (76% P_2O_5)	105% H_3PO_4	210/99	210/99	180	210/99	210/99
Surfactant[6]						
T						
T-Butyl Hydroperoxide[6]	70					
Tall Oil Reactor[6]		210	220/104		210	220
Tall Oil Storage	All	200/94	220/104		200	220/104
Tannic Acid	All	210/99	210/99	150	210/99	210/99
Tartaric Acid	All	210/99	210/99	150	210/99	210/99
Tetrachloroethane	100	NR	120/49	NR	NR	NR
Tetrachloroethylene (Perchloroethylene)	100	80/27	120/49	NR	80/27	120/49
Tetrachloropentane[7]	100	80	100/38	NR		
Tetrachloropyridine		80/27	120/49	NR	80/27	120/49
Tetrapotassium Pyrophosphate	60	130/54	150/65	130	130/54	150/65
Tetrasodium Ethylenediamine-tetracetic Acid[1]	All	120/49	120/49	120	120/49	120/49
TEXTONE Liquid Product 50% aqueous solution of sodium chlorite		210/99	210/99	180	180/82	180/82

A blank space in the table indicates no data available at the time temperature ratings were assigned.

NR: **Not Recommended.** Drains, flooring, gratings, and structural supports for walkways and stairways, where exposure is intermittent or is to fumes or spills only, may give good service in those chemical environments shown as NR (not recommended).

[1]Double synthetic veil should be used in inner layer.
[2]Post-cure recommended to increase service life.
[3]Benzoyl peroxide – DMA cure system recommended to increase service life.
[4]Recommended provided that solvent used for dissolution is also recommended.
[5]Satisfactory up to maximum stable temperature for product.

Chemical Environment	% Concentration	Maximum Recommended Temperature, °F/°C				
		DERAKANE 411	DERAKANE 470	DERAKANE 8084	DERAKANE 510A-40 and 530	DERAKANE 510N
Thermal Oxidizer (HCl Absorption)			180/82			
Thioglycolic Acid (Mercaptoacetic Acid)	All	NR	100/38	NR	NR	80/27
Thionyl Chloride		NR	NR		NR	NR
Tin Fluoborate Plating Bath, 18% Stannous Fluoborate; 7% Tin, 9% Fluoboric Acid; 2% Boric Acid[1]		210/99	210/99	180	210/99	210/99
Tobias Acid (2-naphthylamine-1-sulfonic)	All	210/99	210/99		210/99	210/99
Toluene	100	80/27	120/49	NR	80/27	100/38
Toluene Sulfonic Acid[6]	All	210/99	210/99		210/99	210/99
Tomato Sauce		190/87				
Transformer Oils		210/99	300/149		230/110	300/149
Tributyl Phosphate	100	120/49	140/57	100	120/49	140/57
Trichloroacetic Acid	50	210/99	210/99		210/99	210/99
Trichloroethane	100	100/38	120/49[7]	NR	100/38	120/49[7]
Trichloroethylene	100	NR	NR[6]	NR	NR	NR
Trichloromonofluoromethane[1]	100	80/27	100/38	NR	80/27	100/38
2, 4, 5 Trichlorophenoxyacetic Acid (Acid, Salts, Esters and Formulations)[4]		120/49	150/65	100	120/49	150/65
Tricresyl Phosphate	100	160/71	160/71		160/71	160/71
Triethanolamine	100	120/49	120/49[7]	NR	120/49	120/49
Triethylamine	All	120/49	120/49	NR		
Triethylene Glycol	100	180/82	180/82			
Trimethylene Chlorobromide		NR	NR	NR	NR	NR
Trioctyl phosphine oxide, diethyl hexyl phosphoric acid; kerosene 4/4/92		180/82	180/82		180/82	180/82
Tripropylene Glycol	100	150/65	150/65	120		
Trisodium Phosphate	All	210/99	250/121	180	210/99	250/121
TRITON X-100 Wetting Agent			100/38			80/27
Turpentine	100	150/65	210/99	100	150/65	210/99
TWEEN Surfactant	All	150/65	180/82		150/65	180/82
TYDEX* 12 Flocculant	12	150/65	150/65	150	150/65	150/65

[6]Check with corrosion technical service lab for specific recommendations.
[7]Probably satisfactory at higher temperatures but temperature shown is the highest for which information was available.
[8]Double c-veil and 200 mil corrosion liner should be used.
[9]Double c-veil.
[10]Call for recommendations if sulfuric acid is present.
[11]DERAKANE 470-45 resin is recommended for alkaline and hypo service.
[12]If service is marginal use DERAKANE 470-36 resin.
*Trademark of The Dow Chemical Company

—Continued

Maximum Service Temperature vs Chemical Environment

Chemical Environment	% Concentration	Maximum Recommended Temperature, °F/°C				
		DERAKANE 411	DERAKANE 470	DERAKANE 8084	DERAKANE 510A-40 and 530	DERAKANE 510N
U						
ULTRAWET Surfactants	All	150/65	180/82	150	150/65	180/82
URAN Fertilizer Urea—Ammonium Nitrate Composition: 44.3% Ammonium Nitrate 35.4% Urea 20.3% Water		120/49	120/49	120	120/49	120/49
Uranium Extraction			180/82		180/82	
Urea	50	150/65	150/65	150	150/65	150/65
Urea: Ammonium Nitrate: Water	35:44:20	120/49	NR	120	120/49	
Urine Sugar			240/116			
V						
anillin Black Liquor		120/49				
VERSENE* Chelating Agents[1]		120/49	120/49	120	120/49	120/49
VIDDEN* D Fumigant			80/27			
Vinegar	100	210/99	210/99	150	210/99	210/99
Vinyl Toluene	100	80/27	120/49	NR	80/27	120/49
VORANOL* P-400 Polyol	100	120/49	120/49	120	120/49	120/49
W						
Waste, Organic, H_2O, HCl, Cl_2 Vapors[5]		180	180/82		120	150/65
Water, 50 ppm Phenol			120/49			100/38
Water, Deionized	100	180/82	180/82	180	180/82	180/82

A blank space in the table indicates no data available at the time temperature ratings were assigned.

NR: Not Recommended. Drains, flooring, gratings, and structural supports for walkways and stairways, where exposure is intermittent or is to fumes or spills only, may give good service in those chemical environments shown as NR (not recommended).

[1]Double synthetic veil should be used in inner layer.
[2]Post-cure recommended to increase service life.
[3]Benzoyl peroxide—DMA cure system recommended to increase service life.
[4]Recommended provided that solvent used for dissolution is also recommended.
[5]Satisfactory up to maximum stable temperature for product.

Chemical Environment	% Concentration	Maximum Recommended Temperature, °F/°C				
		DERAKANE 411	DERAKANE 470	DERAKANE 8084	DERAKANE 510A-40 and 530	DERAKANE 510N
Water, Distilled	100	180/82	210/99	180	180/82	210/99
Water, Sea, desalination pH 7.5	1.75 x Normal	180/82	180/82	180	180/82	180/82
Water, Sea, desalination pH 7.5	2.75 x Normal	180/82	180/82	180	180/82	180/82
Water, Steam Condensate	100	180/82	180/82	180	180/82	180/82
Whey	All	150/65				
White Liquor (Pulp Mill)		180/82	180/82	150	180/82	180/82
X						
Xylene	100	80/27	120/49[7]	NR	80/27	120/49[7]
Z						
Zinc Chloride	70	210/99	310/154	180	210/99	250/121
Zinc Cyanide		180/82	180/82	180	180/82	180/82
Zinc Cyanide Plating Bath,[1] 9% Zinc and 4% Sodium Cyanides, 9% Sodium Hydroxide		180/82	180/82	180	180/82	180/82
Zinc Electrolyte		150/64	150/65	150	150/65	150/65
Zinc Fluoborate Plating Bath,[1] 49% Zinc Fluoborate; 5% Ammonium Chloride 6% Ammonium Fluoborate		200/93	200/93	180	200/93	200/93
Zinc Nitrate	All	210/99	250/121	180	210/99	250/121
Zinc Sulfate	All	210/99	250/121	180	210/99	250/121

[6]Check with corrosion technical service lab for specific recommendations.
[7]Probably satisfactory at higher temperatures but temperature shown is the highest for which information was available.
[8]Double c-veil and 200 mil corrosion liner should be used.
[9]Double c-veil.
[10]Call for recommendations if sulfuric acid is present.
[11]DERAKANE 470-45 resin is recommended for alkaline and hypo service.
[12]If service is marginal use DERAKANE 470-36 resin.
*Trademark of The Dow Chemical Company

VINYL ESTER INTERNAL COATING FOR TANKS 10-16

WE TAKE EXTRA PRECAUTIONS... TO PROVIDE YOU WITH EXTRA PROTECTION

Ninety-six hours of continuous exposure is far more than the average duration of a chemical spill. Yet, that is the standard we use when it comes to testing our products for secondary containment. It's part of the "extra care" we take, to give you extra protection and confidence. Something you've come to expect from Plasite products.

Wisconsin Protective Coatings can provide testing, or supply sample panels for your in-house testing. If you want to test your specific product, contact your Wisconsin Protective Coatings' Representative for details.

PLASITE®

Product No.	Std. Colors	Product Description	Shelf/Pot Life at 70° F		Percent Solids	Film Thickness (Mils)	Sq. Ft. per Gal. (Includes 20% Loss Coverage)
			Shelf	Pot			
VINYL ESTERS							
4100/ 4110	Charcoal Gray	A sprayable, vinyl ester coating for application at 40 mils which exhibits chemical resistance to aggressive acids, caustic, salts and oxidizing agents. It is superior when compared to polyester flake glass. An ideal coating for pollution control equipment and hot, sour stacks to 380° F continuous. For severe abrasion exposure use 4110. Meets FDA requirements.	3 mos.	2 1/2 hrs.	Not applicable because of styrene loss.	40	24
FOR TANKS 10-16 4300/ 4310	Charcoal Gray	Similar to 4100, but provides better solvent resistance and higher temperature limits in immersion service. Temperature resistance in dry exposure up to 380° F continuous. For severe abrasion exposure use 4310.	3 mos.	2 1/2 hrs.	Not applicable because of styrene loss.	40	24
MODIFIED EPOXY - COLD SETS							
C - 784	Gray	Unique semi self-leveling flooring material for secondary containment. Superior chemical resistance especially good concentrated sulfuric acid resistance used with C - 782 concrete sealer.	12 mos.	30 min.	100%	60	24
7122	Green Light Gray Med. Gray Black White	A cross linked epoxy-phenolic amine cured formulation of high solids content used primarily as a tank lining and for severe service in industrial maintenance. The superior resistance to a wide range of acids, alkalies, solvents and aqueous solutions makes 7122 an ideal, all-around coating for the Process Industry. For anti-abrasion service use 7122 HAR.	24 mos.	24 hrs.	Weight - 67% Volume - 56%	12-15	53
9060	White Light Gray	A high solids, modified epoxy with an amine adduct curing agent. Formulated to meet anticipated VOC regulations, it is a highly chemical resistant coating exhibiting superior solvent resistance. A non-toxic, odorless product meeting FDA requirements for food service.	12 mos.	1 1/2 hrs.	Weight - 90% Volume - 82%	12-15	81
9084	White Light Gray	High solids epoxy industrial maintenance coating. Superior sulfuric acid resistance properties for secondary containment.	12 mos.	2-4 hrs.	70%	12-15	69
TROWELABLE COATINGS							
5200 Series	Red Brown Gray	**Plasite 5200 Series Trowelable Floor Toppings** Designed for resurfacing and patching of old or new floors. These heavy duty, chemical resistant monolithic toppings have excellent adhesion to concrete, steel and wood. Not affected by water, gasoline, oil, brine and most acids and alkalies. Many times stronger than concrete and much more permanent.	12 mos.		100%	1/4"	Primer 100 ft²/unit Surfacer 100 ft²/ 6 units
5300 Series	Green	**Plasite 5300 Series Linings** Designed as a general chemical resistant thermosetting lining, Plasite 5300 Series Linings are waterproof and resistant to most acids, alkalies and solvents.	12 mos.		100%	1/8"	Primer 66 ft²/unit Liner 66 ft²/ 6 units
5600 Series	Red Brown Gray	**Plasite 5600 Series Laminated Floor Toppings** Developed for maximum chemical resistance. A laminated flooring system with formulations tailored to meet your specific chemical resistance needs. Excellent non-skid surface, yet gray easily cleaned.	3 mos. At 75° F		100%	1/4" - 3/8"	45ft²/Gallon

FOR TANKS 10-16

CHEMICAL RESISTANCE CHART FOR SECONDARY CONTAINMENT

*Concrete surfaces require use of PLASITE 9028M1 Filler/Sealer.

	C – 784 Semi Self-Leveling Flooring	*4100 Spray Applied Vinyl Ester	*4300 Spray Applied Vinyl Ester	5206 Trowel Applied Epoxy	5209 Trowel Applied Epoxy	5302 Trowel Applied Epoxy	5306 Trowel Applied Epoxy	5309 Trowel Applied Epoxy	5325 Trowel Vinyl Ester	5600 Laminated Polyester	5602 Laminated Vinyl Ester	*7122 Spray Applied Epoxy	*9060 Spray Applied Epoxy	*9084 Spray Applied Epoxy
ACIDS														
Acetic (Glacial)	NR	◆	◆	◆	◆	◆	◆	◆	◆	◆	◆	6	6	NR
Acetic, 5%	◆	◆	◆	◆	◆	◆	◆	◆	◆	◆	◆	◆	◆	◆
Acetic, 20%	◆	◆	◆	◆	◆	◆	◆	◆	◆	◆	◆	◆	◆	◆
Chromic, 10%	◆	◆	◆	◆	◆	◆	◆	◆	◆	◆	◆	◆	◆	◆
Chromic, 50%	◆	◆	◆	◆	◆	◆	◆	◆	◆	◆	◆	◆	◆	◆
Citric, 10%	◆	◆	◆	◆	◆	◆	◆	◆	◆	◆	◆	◆	◆	◆
Citric, 50%	◆	◆	◆	◆	◆	◆	◆	◆	◆	◆	◆	◆	◆	◆
Formic, 10%	NR	◆	◆	◆	◆	◆	◆	◆	◆	◆	◆	◆	◆	NR
Formic, 90%	NR	◆	◆	◆	24	◆	24	NR	◆	◆	◆	64	16	NR
Hydrochloric, 1%	◆	◆	◆	◆	◆	◆	◆	◆	◆	◆	◆	◆	◆	◆
Hydrochloric, 10%	◆	◆	◆	◆	◆	◆	◆	◆	◆	◆	◆	◆	◆	◆
Hydrochloric, 37%	◆	◆	◆	◆	◆	◆	◆	◆	◆	◆	◆	◆	◆	◆
Hydrofluoric, 40%	◆	◆	◆	◆	◆	◆	◆	◆	◆	◆	◆	◆	◆	◆
Lactic, 85%	48	◆	◆	◆	◆	◆	◆	◆	◆	◆	◆	◆	◆	◆
Nitric, 1%	◆	◆	◆	◆	◆	◆	◆	◆	◆	◆	◆	◆	◆	◆
Nitric, 10%	◆	◆	◆	◆	◆	◆	◆	◆	◆	◆	◆	◆	◆	24
Nitric, 70%	NR	◆	◆	◆	NR	◆	◆	◆	◆	◆	◆	64	40	NR
Phenol, 50% (Carbolic Acid)	24	◆	◆	◆	◆	◆	◆	NR	◆	◆	◆	◆	◆	NR
Phenol, 100% (Carbolic Acid)	12	◆	◆	◆	◆	◆	◆	NR	◆	◆	◆	16	◆	NR
Phosphoric, 10%	◆	◆	◆	◆	◆	◆	◆	◆	◆	◆	◆	◆	◆	◆
Phosphoric, 86%	◆	◆	◆	◆	◆	◆	◆	48	◆	◆	◆	◆	◆	◆
Sulfuric, 1%	◆	◆	◆	◆	◆	◆	◆	◆	◆	◆	◆	◆	◆	◆
Sulfuric, 10%	◆	◆	◆	◆	◆	◆	◆	◆	◆	◆	◆	◆	◆	◆
Sulfuric, 50%	◆	◆	◆	◆	◆	◆	◆	◆	◆	◆	◆	◆	◆	◆
Sulfuric, 90-95%	◆	24	◆	◆	◆	◆	◆	◆	◆	◆	◆	4	4	48
Sulfuric, 95-98%	◆	24	48	◆	◆	24	48	◆	48	48	◆	1	1	48
ALKALIES														
Aqua Ammonia, 29%	◆	◆	◆	◆	◆	◆	◆	◆	◆	◆	◆	◆	◆	◆
Potassium Carbonate (Potash), 50%	◆	◆	◆	◆	◆	◆	◆	◆	◆	◆	◆	◆	◆	◆
Potassium Hydroxide, 50%	◆	◆	◆	◆	◆	◆	◆	◆	◆	◆	◆	◆	◆	◆
Sodium Carbonate (Soda Ash), 50%	◆	◆	◆	◆	◆	◆	◆	◆	◆	◆	◆	◆	◆	◆
Sodium Hydroxide, 50%	◆	◆	◆	◆	◆	◆	◆	◆	◆	◆	◆	◆	◆	◆
AMINES														
Diethanolamine	◆	◆	◆	◆	◆	◆	◆	◆	◆	◆	◆	◆	◆	◆
Diethylenetriamine	◆	◆	◆	◆	◆	◆	◆	◆	◆	◆	◆	◆	◆	◆
Ethylenediamine	NR	◆	◆	◆	64	◆	◆	◆	◆	◆	◆	◆	◆	24
Monoethanolamine	◆	◆	◆	◆	◆	◆	◆	◆	◆	◆	◆	◆	◆	◆
SALTS														
Calcium Chloride (Saturated)	◆	◆	◆	◆	◆	◆	◆	◆	◆	◆	◆	◆	◆	◆
Ferric Chloride, 50%	◆	◆	◆	◆	◆	◆	◆	◆	◆	◆	◆	◆	◆	◆
Sodium Chlorate, 50%	◆	◆	◆	◆	◆	◆	◆	◆	◆	◆	◆	◆	◆	◆
Sodium Chloride, 50%	◆	◆	◆	◆	◆	◆	◆	◆	◆	◆	◆	◆	◆	◆
Sodium Sulfate (Saturated)	◆	◆	◆	◆	◆	◆	◆	◆	◆	◆	◆	◆	◆	◆

NOTE: Hours listed indicate the continuous exposure time the coating will protect the substrate.

◆ Indicates no or minimal effect (discoloration, bleaching) to coating system in 96 hours of exposure.

◆ Indicates some deterioration of coating system but not to substrate in 96 hours.

NR Not Recommended

ALL TESTS WERE CONDUCTED AT ROOM TEMPERATURE.

CHEMICAL RESISTANCE CHART FOR SECONDARY CONTAINMENT

*Concrete surfaces require use of PLASITE 9028M1 Filler/Sealer.

	C – 784 Semi Self-Leveling Flooring	*4100 Spray Applied Vinyl Ester	*4300 Spray Applied Vinyl Ester	5206 Trowel Applied Epoxy	5209 Trowel Applied Epoxy	5302 Trowel Applied Epoxy	5306 Trowel Applied Epoxy	5309 Trowel Applied Epoxy	5325 Trowel Vinyl Ester	5600 Laminated Polyester	5602 Laminated Vinyl Ester	*7122 Spray Applied Epoxy	*9060 Spray Applied Epoxy	*9084 Spray Applied Epoxy
SOLVENTS														
Benzene	◆	◆	◆	◆	◆	◆	◆	◆	◆	◆	◆	◆	◆	◆
Ethyl Alcohol	◆	◆	◆	◆	◆	◆	◆	◆	◆	◆	◆	◆	◆	◆
Ethylene Dichloride	NR	48	◆	◆	NR	24	◆	◆	48	24	◆	◆	◆	NR
Ethylene Glycol	◆	◆	◆	◆	◆	◆	◆	◆	◆	◆	◆	◆	◆	◆
Furfuryl Alcohol	◆	◆	◆	◆	◆	◆	◆	◆	◆	◆	◆	◆	◆	◆
Methanol	◆	◆	◆	◆	◆	◆	◆	◆	◆	◆	◆	◆	◆	12
Methyl Ethyl Ketone	NR	48	◆	◆	24	◆	◆	◆	◆	24	◆	◆	◆	NR
N-Methyl 2-Pyrrolidone	NR	◆	◆	◆	NR	◆	◆	NR	◆	◆	◆	48	◆	NR
Methylene Chloride	NR	2	◆	3	NR	3	3	3	3	3	8	0	0	NR
Propylene Glycol Monomethyl Ether (PM)	24	◆	◆	◆	◆	◆	◆	◆	◆	◆	◆	◆	◆	12
Toluene	◆	◆	◆	◆	◆	◆	◆	◆	◆	◆	◆	◆	◆	◆
1, 1, 1 Trichloroethane	◆	◆	◆	◆	◆	◆	◆	◆	◆	◆	◆	◆	◆	◆
MISC														
Creosote	◆	◆	◆	◆	◆	◆	◆	◆	◆	◆	◆	◆	◆	◆
Formaldehyde, 37%	◆	◆	◆	◆	◆	◆	◆	◆	◆	◆	◆	◆	◆	◆
Gasoline (Premium No-Lead)	◆	◆	◆	◆	◆	◆	◆	◆	◆	◆	◆	◆	◆	◆
Hydraulic Fluid (Super-X)	◆	◆	◆	◆	◆	◆	◆	◆	◆	◆	◆	◆	◆	◆
Hydrogen Peroxide, 3%	◆	◆	◆	◆	◆	◆	◆	◆	◆	◆	◆	◆	◆	◆
Hydrogen Peroxide, 30%	◆	◆	◆	◆	◆	◆	◆	◆	◆	◆	◆	4	◆	◆
Hydrogen Peroxide, 70%	NR	◆	◆	◆	◆	◆	◆	◆	◆	◆	◆	4	4	NR
Lignins (Norlig A)	◆	◆	◆	◆	◆	◆	◆	◆	◆	◆	◆	◆	◆	◆
Liquor, Weak Black (P & G)	◆	◆	◆	◆	◆	◆	◆	◆	◆	◆	◆	◆	◆	◆
Sodium Hypochlorite, 5%	◆	◆	◆	◆	◆	◆	◆	◆	◆	◆	◆	◆	◆	◆
Sodium Hypochlorite, 12%	◆	◆	◆	◆	◆	◆	◆	◆	◆	◆	◆	◆	◆	◆
Styrene	◆	◆	◆	◆	◆		◆	◆	◆	◆	◆	◆	◆	◆
Tall Oil	◆	◆	◆	◆	◆	◆	◆	◆	◆	◆	◆	◆	◆	◆

NOTE: Hours listed indicate the continuous exposure time the coating will protect the substrate.

◆ Indicates no or minimal effect (discoloration, bleaching) to coating system in 96 hours of exposure.

◆ Indicates some deterioration of coating system but not to substrate in 96 hours.

NR Not Recommended

ALL TESTS WERE CONDUCTED AT ROOM TEMPERATURE.

The Best Barrier Between You And Failure

PLASITE®

For more information contact:
Wisconsin Protective Coatings Corporation
Post Office Box 8147
Green Bay, WI 54308-8147

(414) 437-6561
(414) 437- 8083 (FAX)

R:4/91

AMBA
5 Deer Park Road
Westoque Connecticut 06089
203-658-1955
P.O. Box 789
Belle Mead, New Jersey 08502
201-359-6111

containment from a point within the tank containment until it reaches CWTP-1.

Diaphragm valves would be used for the control of flow and destination. This type of valve is preferred to minimize potential fugitive emissions. These valves can be operated in both a manual and automated mode.

PVDF (polyvinylidene fluoride) pipe will be the waste carrier in the acid area and FRP (fiberglass reinforced plastic) will be the waste carrier in the Alkali/cyanide, oil/solvent, and ignitible/PCB chemical areas. The PVDF material will be fusion welded and the FRP will be cemented, except flanges will be used at pumps and valves. Chemical resistance data for these materials are included in Exhibit D-6 presented previously.

Transfer piping from the storage tanks to the CWTP will be routed within the CWS&TF at an elevated position to the northeast corner of the building. It would exit the building through the side wall at a minimum height of 15 feet above grade. Pipes would be carried overhead on rack supports to the south side of the existing CWTP. The pipes will be carried in a double-walled containment and be insulated and electrically heat traced. The pipes will be pitched to drain from a high point at the northeast corner of the CWS&TF toward the storage tanks and toward the permitted facilities in CWTP-1.

Fixed pipe from the storage tanks will also terminate at the containment wall adjacent to the truck bays for tanker trucks servicing the tanks. The termination will be a fitting designed to minimize dripping.

g. Instrumentation and Controls

Instrumentation will be installed on the storage tanks, pumps, valves, tanker trucks, and containments to provide the following information:

- Storage tank and tanker truck liquid level.
- Valve position (open or closed)
- Pump activity
- Floor sump level (for leak detection in tank storage containments)

Critical operation steps will be interlocked to prevent discharge of waste solutions when not appropriate. For instance, a high storage tank level will close the feed valve and/or disengage the transfer pump filling the tank. This operation will be controlled by the Facility Computer System, will occur automatically, and will sound an alarm.

In all places practical, sensing devices will monitor continuous variables. This will provide greater control, because these devices will be coordinated with a computerized control station.

Tank level sensors will be permanently flange mounted on the top of each tank and include a continuous volume readout, a low level signal, high level signal and maximum level alarm. A second high level sensor will provide backup for the storage tank overfill protection system. The tanker truck level sensor will be a removable unit that will provide an alarm when the tanker liquid level is close to capacity.

Pumps will be activated by electrical solenoid valves on the air supply feed lines. Diaphragm valves will be manually opened

or closed, except those automated for safety which will be activated or by electrical solenoid valves on an air actuator. Manual override will be incorporated in the automated valve body to allow for operator control. Limit or position switches at each valve will feed information to the facility computer system to provide system status and determine if a chosen flow pathway is acceptable.

Pump controls will be located at computer stations, the tanker unload stations, transporter/container unload stations, and the CWTP discharge location. At these locations the operator will select source, destination and pump to be used. If the valves are in the correct position for the transfer selected, the computer system will acknowledge and allow the operator to initiate the transfer. The Facility Computer System will control the valve positions preventing the operator from making an unauthorized transfer.

h. Tank System Decontamination

The tank systems in the CWS&TF are arranged in four classes as follows:

Acid	-	5 Tanks
Alkali	-	4 Tanks
Oil/Water	-	4 Tanks
Ignitible/PCB	-	3 Tanks

Associated with each class of tanks is a truck pad and transporter/container unloading station. Within each class of tanks, each individual tank system can contain wastes which are incompatible with the contents of the other tanks in the class.

EXHIBIT E-2
Model Inspection Logs, Non-permitted Units

GROUP: 006850 JOB: 000569 DEPT: 00026-0 INV: 350000 P#: 01 P599036 P
DESCRIPTION: PM69TK RCRA MACHINE: TANKINSPECTION WK-D-SQ: 745-1-01 SCHD WEEK: 09/02/91
TRADE: ROUTE/COLUMN: CWTP
* B000569 350000 745101 *

PREVENTIVE MAINTENANCE TASK
GUIDE PM69TK

DATE: ___/___/___
NAME: _____
CLOCK: _____
DOWN TIME: _____

INSPECTION POINT

INSPECTION POINT	
1. TANKS:	CHECK FOR LEAKS OR DETERIORATION IN TANK WALLS, SEAMS AND COVERS.
2. CONTAINMENT AREAS:	CHECK FOR THE PRESENCE OF CRACKS, FAULTS, AND LEAKS AND INSPECT COATING FOR DAMAGE AND SIGN OF DETERIORATION.
3. PIPELINES:	CHECK LINES LEADING TO AND FROM TANK FOR LEAKS, CRACKS, SAGS, AND OTHER DETERIORATION.
4. PUMPS:	CHECK TANK ASSOCIATED PUMP FOR LEAKS AND OTHER OPERATIONAL PROBLEMS.
5. VALVES:	CHECK FOR LEAKS AND OPERATIONAL PROBLEMS.
6. TANK INTERIOR:	CHECK FOR CRACKS, FAULTS, AND DETERIORATION OF THE WALLS WHEN THE TANK IS EMPTY.
7. SIGNS:	CHECK FOR PRESENCE AND CONDITION OF WARNING SIGNS.

8. CHECK AND NOTE ANY DEFICIENCIES BELOW AND REPORT TO FOREMAN.

	S	U		S	U
#1 CYANIDE STORAGE TANK			#1 ACID STORAGE TANK		
#2 CYANIDE STORAGE TANK			#2 ACID STORAGE TANK		
ALKALI STORAGE TANK			CHROME STORAGE TANK		
OIL/SOLVENT BLEND TANK			TRUCK PAD #1		
ZYGLO STORAGE TANK			TRUCK PAD #2		
WAX/SOLVENT STOR TANK			TRUCK PAD #3		

LIST ALL DEFICIENCIES AND ACTIONS TAKEN:

: 1991-03-11

TECHNICIAN SIGNATURE

FINAL

MODEL INSPECTION LOG

Unit: CWTP-5 Storage Building A

Date:___/___/___
Name:_____
Clock:_____
Down Time:_____

Frequency: Weekly

INSPECTION POINT		— S — U —
1. Containers:	Check for signs of leaks, weakness or deterioration. Remove and repack where necessary.	— — —
	Check for open containers, damaged labels, proper labeling and marking.	— — —
2. Pallets:	Check for breaks, weakness or deterioration. Replace as necessary.	— — —
3. Aisle space:	Check for adequate aisle spaces.	— — —
4. Floor:	Check for signs of cracks, gaps or other deterioration. Inspect coatings for damage and signs of deterioration.	— — —
5. Sumps:	Check for liquid, debris or other matter Remove liquids within 24 hours.	— — —
6. Compatibility:	Check for proper segregation of incompatibles. Verify identification signs with compatibility groups.	— — —
7. Loading Areas:	Inspect for signs of leakage when in use.	— — —
8. Signs:	Check for presence and condition of warning signs.	— — —
9. Equipment:	Check for proper inventory of spill control and personnel safety equipment.	— — —
10. Inventory:	Count number and size of containers in each containment area.	— — —

Containment Area Number	Container Size, gallons	Number of Containers

11. Report deficiencies to Foreman.

LIST ALL DEFICIENCIES, CORRECTIVE ACTION TAKEN AND DATE TAKEN:

_____
Technician Signature

MODEL INSPECTION LOG

Unit: CWTP-6 Storage Building B

Date:___/___/___
Name:_____
Clock:_____
Down Time:_____

Frequency: Weekly

INSPECTION POINT		— S —	— U —	—
1. Containers:	Check for signs of leaks, weakness or deterioration. Remove and repack where necessary.	—	—	—
	Check for open containers, damaged labels, proper labeling and marking.	—	—	—
2. Pallets:	Check for breaks, weakness or deterioration. Replace as necessary.	—	—	—
3. Aisle space:	Check for adequate aisle spaces.	—	—	—
4. Floor:	Check for signs of cracks, gaps or other deterioration. Inspect coatings for damage and signs of deterioration.	—	—	—
5. Sumps:	Check for liquid, debris or other matter Remove liquids within 24 hours.	—	—	—
6. Compatibility:	Check for proper segregation of incompatibles. Verify identification signs with compatibility groups.	—	—	—
7. Loading Areas:	Inspect for signs of leakage when in use.	—	—	—
8. Signs:	Check for presence and condition of warning signs.	—	—	—
9. Equipment:	Check for proper inventory of spill control and personnel safety equipment.	—	—	—
10. Inventory:	Count number and size of containers in each containment area.	—	—	—

Containment Area Number	Container Size, gallons	Number of Containers

11. Report deficiencies to Foreman.

LIST ALL DEFICIENCIES, CORRECTIVE ACTION TAKEN AND DATE TAKEN:

_____
Technician Signature

MODEL INSPECTION LOG

Unit: Fence

Frequency: Quarterly

Date:___/___/___
Name:_____
Clock:_____
Down Time:_____

INSPECTION POINT		— S —	U —
1. Base:	Check for bends, cuts and rust	—	— —
2. Top:	Check for bends, cuts and rust.	—	— —
3. Posts:	Check for stability and structural integrity.	—	— —
4. Gates	Check latches, hinges, rollers and electrical motors.	—	— —

5. Report deficiencies to Foreman.

LIST ALL DEFICIENCIES, CORRECTIVE ACTION TAKEN AND DATE TAKEN

_____
Technician Signature

MODEL INSPECTION LOG

Unit: CWTP-1 Container Storage Area

Date:___/___/___
Name:_____
Clock:_____
Down Time:_____

Frequency: Weekly

INSPECTION POINT		— S — U —
1. Containers:	Check for signs of leaks, weakness or deterioration. Remove and repack where necessary.	— — —
	Check for open containers, damaged labels, proper labeling and marking.	— — —
2. Pallets:	Check for breaks, weakness or deterioration. Replace as necessary.	— — —
3. Aisle space:	Check for adequate aisle spaces.	— — —
4. Floor:	Check for signs of cracks, gaps or other deterioration. Inspect coatings for damage and signs of deterioration.	— — —
5. Sumps:	Check for liquid, debris or other matter Remove liquids within 24 hours.	— — —
6. Compatibility:	Check for proper segregation of incompatibles. Verify identification signs with compatibility groups.	— — —
7. Loading Areas:	Inspect for signs of leakage when in use.	— — —
8. Signs:	Check for presence and condition of warning signs.	— — —
9. Equipment:	Check for proper inventory of spill control and personnel safety equipment.	— — —
10. Inventory:	Count number and size of containers in each containment area.	— — —

Containment Area Number	Container Size, gallons	Number of Containers

11. Report deficiencies to Foreman.

LIST ALL DEFICIENCIES, CORRECTIVE ACTION TAKEN AND DATE TAKEN:

_____
Technician Signature

MODEL INSPECTION LOGS

Unit: CWTP-2 Aboveground Storage Tanks
Cyanide 1&2; Alkali; Chrome; Blend;
Zyglo; Acid 1&2.
Frequency: Daily

Date:___/___/___
Name:_____
Clock:_____
Down Time:_____

INSPECTION POINT		— S —	— U —	—
1. Tanks:	Check for leaks or deterioration in tank walls, seams and covers.	—	—	—
2. Containment Areas:	Check for the presence of cracks, faults and leaks and inspect coatings for damage and signs of deterioration.	—	—	—
	Check for the presence of standing liquid, debris or other matter and clean where necessary. Remove liquid within 24 hours.	—	—	—
3. Tank Interior:	Check for cracks, faults and deterioration of the walls when the tank is empty.	—	—	—
4. Pipelines:	Check lines leading to and from tanks for leaks, cracks, sags and other signs of deterioration.	—	—	—
5. Pumps:	Check tank associated pumps for leaks and other operational problems.	—	—	—
	Check pump sumps for liquid, debris or other matter and clean where necessary. Remove liquids within 24 hours.	—	—	—
6. Valves:	Check for leaks and operational problems.	—	—	—
7. Signs:	Check for presence and condition of warning signs.	—	—	—
8. Equipment:	Check for proper inventory of spill control and personnel safety equipment.	—	—	—

9. Report deficiencies to Foreman.

LIST ALL DEFICIENCIES, CORRECTIVE ACTION TAKEN AND DATE TAKEN:

_____
Technician Signature

MODEL INSPECTION LOG

Unit: CWTP-2 Container Storage Area

Date:___/___/___
Name:_____
Clock:_____
Down Time:_____

Frequency: Weekly

INSPECTION POINT			S	U	
1.	Containers:	Check for signs of leaks, weakness or deterioration. Remove and repack where necessary.	—	—	—
		Check for open containers, damaged labels, proper labeling and marking.	—	—	—
2.	Pallets:	Check for breaks, weakness or deterioration. Replace as necessary.	—	—	—
3.	Aisle space:	Check for adequate aisle spaces.	—	—	—
4.	Floor:	Check for signs of cracks, gaps or other deterioration. Inspect coatings for damage and signs of deterioration.	—	—	—
5.	Sumps:	Check for liquid, debris or other matter Remove liquids within 24 hours.	—	—	—
6.	Compatibility:	Check for proper segregation of incompatibles. Verify identification signs with compatibility groups.	—	—	—
7.	Loading Areas:	Inspect for signs of leakage when in use.	—	—	—
8.	Signs:	Check for presence and condition of warning signs.	—	—	—
9.	Equipment:	Check for proper inventory of spill control and personnel safety equipment.	—	—	—
10.	Inventory:	Count number and size of containers in each containment area.	—	—	—

Containment Area Number	Container Size, gallons	Number of Containers

11. Report deficiencies to Foreman.

LIST ALL DEFICIENCIES, CORRECTIVE ACTION TAKEN AND DATE TAKEN:

_____
Technician Signature

MODEL INSPECTION LOG

Unit: Tanker Loading/Unloading Pads

Frequency: Daily When in Use

Date:___/___/___
Name:_____
Clock:_____
Down Time:_____

INSPECTION POINT		— S —	— U —	—
1. Base:	Check for signs of cracks, faults or other deterioration. Inspect coatings for damage and signs of deterioration.	—	—	—
2. Sumps & Spill Tank:	Check for the presence of cracks, faults and leaks and inspect coating for damage and signs of deterioration.	—	—	—
	Check for the presence of standing liquid, debris or other matter and clean where necessary. Remove liquid within 24 hours.	—	—	—
3. Piping:	Check for leaks, cracks, sags or other deterioration.	—	—	—
4. Valves:	Check for leaks and operational problems. Sump valves must be open when pads are not in use.	—	—	—
5. Signs:	Check for presence and condition of warning signs and compatibility group identification labels.	—	—	—

9. Report deficiencies to Foreman.

LIST ALL DEFICIENCIES, CORRECTIVE ACTION TAKEN AND DATE TAKEN:

_____
Technician Signature

MODEL INSPECTION LOG

Unit: CWIP-4 Transporter Storage Pad

Date:___/___/___
Name:_____
Clock:_____
Down Time:_____

Frequency: Weekly

INSPECTION POINT		— S —	— U —	—
1. Containers:	Check for signs of leaks, weakness or deterioration. Remove and repack where necessary.	—	—	—
	Check for open containers, damaged labels, proper labeling and marking.	—	—	—
2. Pallets:	Check for breaks, weakness or deterioration. Replace as necessary.	—	—	—
3. Aisle space:	Check for adequate aisle spaces.	—	—	—
4. Floor:	Check for signs of cracks, gaps or other deterioration. Inspect coatings for damage and signs of deterioration.	—	—	—
5. Sumps:	Check for liquid, debris or other matter Remove liquids within 24 hours.	—	—	—
6. Compatibility:	Check for proper segregation of incompatibles. Verify identification signs with compatibility groups.	—	—	—
7. Loading Areas:	Inspect for signs of leakage when in use.	—	—	—
8. Signs:	Check for presence and condition of warning signs.	—	—	—
9. Equipment:	Check for proper inventory of spill control and personnel safety equipment.	—	—	—
10. Inventory:	Count number and size of containers in each containment area.	—	—	—

Containment Area Number	Container Size, gallons	Number of Containers

11. Report deficiencies to Foreman.

LIST ALL DEFICIENCIES, CORRECTIVE ACTION TAKEN AND DATE TAKEN:

_____
Technician Signature

MODEL INSPECTION LOG

Unit: CWTP-3 Underground Storage Tanks
B1 Oil; B2/B3 Oil; High Flash
Frequency: Daily

Date:___/___/___
Name:_____
Clock:_____
Down Time:_____

INSPECTION POINT		— S —	— U —
1. Leak Detection Systems:	Test to verify that it's operating properly in accordance with the manufacturer's specifications.	—	—
2. Level Control Systems:	Test to verify that it's operating properly in accordance with the manufacturer's specifications.	—	—
	Check high level setpoints.	—	—
3. Pumps:	Check tank associated pumps for leaks and other operational problems.	—	—
	Check pump sumps for liquid, debris or other matter and clean where necessary. Remove liquids within 24 hours.	—	—
4. Dump Station Containments:	Check for presence of cracks, faults and leaks and damage to the coatings.	—	—
	Check for liquid, debris or other matter and clean where necessary. Remove liquids within 24 hours.		

5. Report deficiencies to Foreman.

LIST ALL DEFICIENCIES, CORRECTIVE ACTION TAKEN AND DATE TAKEN:

_____
Technician Signature

FREQUENCY: WEEKLY

ROLL OFF INSPECTION
LESS THAN 90 DAY
STORAGE AREA INSPECTION

DATE: ___/___/___
NAME: _____
CLOCK: _____
DOWN TIME: _____

INSPECTION POINT		S	U
1.	CHECK FOR SIGNS OF LEAKS, WEAKNESS, OR DETERIORATION.		
	CHECK THAT ROLL-OFF IS COVERED WHEN NOT BEING FILLED.		
	CHECK FOR LABELS ON BOTH SIDES OF ROLL-OFF CHECK FOR "HAZARDOUS WASTE" LABEL AND ACCUMULATION START DATE.		
2. START DATE:	CHECK START DATE ON ALL CONTAINERS TO ASSURE STORAGE HAS NOT EXCEEDED 90 DAYS.		
3. LOADING AREA:	INSPECT FOR SIGNS OF SPILLAGE WHEN IN USE. CLEAN UP ANY SPILLAGE IMMEDIATELY.		
4. SIGNS:	CHECK FOR PRESENCE AND CONDITION OF WARNING SIGNS.		
5. EQUIPMENT:	CHECK FOR PROPER INVENTORY OF SPILL CONTROL AND PERSONELL SAFETY EQUIPMENT.		
6. INVENTORY:	COUNT THE NUMBER AND SIZE OF CONTAINERS CONTAINING WASTE IN CONTAINMENT AREA.		

CONTAINER TYPE	SIZE	NUMBER OF CONTAINERS	LIQUID Y OR N	TOTAL WASTE

7. REPORT DEFICIENCIES TO FORMAN.

LIST ALL DEFICIENCIES AND ACTIONS TAKEN:

: 1991-06-04

TECHNICIAN SIGNATURE

INSPECTION LOG

Unit: TANK FARM
HAZARDOUS WASTE UST SALVAGE JET FUEL (LOW FLASH)
Frequency: Daily

Date:___/___/___
Name:_____
Clock:_____
Down Time:_____

INSPECTION POINT		— S —	— U —
1. Leak Detection Systems:	Test to verify that it's operating properly in accordance with the manufacturer's specifications.	—	—
2. Level Control Systems:	Test to verify that it's operating properly in accordance with the manufacturer's specifications.	—	—
	Check high level setpoints.	—	—
3. Pumps:	Check tank associated pumps for leaks and other operational problems.	—	—
	Check pump sumps for liquid, debris or other matter and clean where necessary. Remove liquids within 24 hours.	—	—
4. Dump Station Containments:	Check for presence of cracks, faults and leaks and damage to the coatings.	—	—
	Check for liquid, debris or other matter and clean where necessary. Remove liquids within 24 hours.		

5. Report deficiencies to Foreman.

LIST ALL DEFICIENCIES, CORRECTIVE ACTION TAKEN AND DATE TAKEN:

_____
Technician Signature

MODEL INSPECTION LOG

Unit: Less Than 90 Day Storage Areas
Location:_____
Frequency: Weekly

Date:___/___/___
Name:_____
Clock:_____
Down Time:_____

INSPECTION POINT		S	U	
1. Containers:	Check for signs of leaks, weakness or deterioration. Remove and repack where necessary.	—	—	—
	Check for open containers, damaged labels, proper labeling and marking.	—	—	—
2. Pallets:	Check for breaks, weakness or deterioration. Replace as necessary.	—	—	—
3. Aisle space:	Check for adequate aisle spaces.	—	—	—
4. Floor:	Check for signs of cracks, gaps or other deterioration. Inspect coatings for damage and signs of deterioration.	—	—	—
5. Sumps:	Check for liquid, debris or other matter Remove liquids within 24 hours.	—	—	—
6. Compatibility:	Check for proper segregation of incompatibles. Verify identification signs with compatibility groups.	—	—	—
7. Loading Areas:	Inspect for signs of leakage when in use.	—	—	—
8. Signs:	Check for presence and condition of warning signs.	—	—	—
9. Equipment:	Check for proper inventory of spill control and personnel safety equipment.	—	—	—
10. Inventory:	Count number and size of containers in each containment area.	—	—	—

Containment Area Number	Container Size, gallons	Number of Containers

11. Report deficiencies to Foreman.

LIST ALL DEFICIENCIES, CORRECTIVE ACTION TAKEN AND DATE TAKEN:

_____
Technician Signature

MODEL INSPECTION LOGS

Unit: Less Than 90 Day Storage Tanks
Location:_____
Frequency: Daily

Date:___/___/___
Name:_____
Clock:_____
Down Time:_____

INSPECTION POINT		— S —	— U —	—
1. Tanks:	Check for leaks or deterioration in tank walls, seams and covers. Inspect level control system for proper operation.	—	—	—
2. Containment Areas:	Check for the presence of cracks, faults and leaks and inspect coatings for damage and signs of deterioration.	—	—	—
	Check for the presence of standing liquid, debris or other matter and clean where necessary. Remove liquid within 24 hours.	—	—	—
	Check for proper operation of the leak detection system.	—	—	—
3. Tank Interior:	Check for cracks, faults and deterioration of the walls when the tank is empty.	—	—	—
4. Pipelines:	Check lines leading to and from tanks for leaks, cracks, sags and other signs of deterioration.	—	—	—
5. Pumps:	Check tank associated pumps for leaks and other operational problems.	—	—	—
	Check pump sumps for liquid, debris or other matter and clean where necessary. Remove liquids within 24 hours.	—	—	—
6. Valves:	Check for leaks and operational problems.	—	—	—
7. Signs:	Check for presence and condition of warning signs.	—	—	—
8. Equipment:	Check for proper inventory of spill control and personnel safety equipment.	—	—	—

9. Report deficiencies to Foreman.

LIST ALL DEFICIENCIES, CORRECTIVE ACTION TAKEN AND DATE TAKEN:

_____
Technician Signature

CATHODIC PROTECTION SYSTEM TEST FORM
Concentrated Waste Treatment Plant

Date:_____

Time:_____

Tester's Name:_____

Tank Identification Number	Tank Capacity, gallons	Tank Contents	Cathodic Protection Operating Potential

Testing Frequency: Annual

LIQUID LEVEL MONITORING CALIBRATION AND
RELEASE DETECTION MONITORING
Concentrated Waste Treatment Plant

Date:_____

Time:_____

Tester's Name:_____

Tank Number	Tank Capacity, gallons	Tank Contents	Automatic Level, in.	Manual Level in.	Release Detection Check
					Y/N
					Y/N
					Y/N
					Y/N
					Y/N
					Y/N
					Y/N
					Y/N
					Y/N
					Y/N

Testing Frequency: Daily

Note: If automatic and manual liquid levels vary by more than 10 percent, contact the East Hartford Compliance Group immediately.

In addition Pratt & Whitney has a mobile van outfitted with hazardous materials response equipment. A listing of the van's equipment is presented in Appendix D. This van is located at Fire Headquarters.

6. Emergency Equipment Testing and Maintenance

All fire/safety equipment is routinely inspected and maintained by the Pratt & Whitney Fire Department according to the National Fire Protection Codes. Equipment includes fire extinguishers and Scott Air Paks which are recharged immediately after use. Records of compliance with the codes are kept by the Fire Department.

As a matter of practice, the other emergency equipment is always replaced after it is used. All materials that are used in emergencies are available at nearby Plant Engineering cribs.

7. Less Than 90 Day Storage Areas

There are several less than 90 day hazardous waste storage areas at the East Hartford Facility. The locations of these areas are identified on the map presented as Figure 5. A description of each location follows:

Location No.	Description
1	Rentschler Airport - Container Storage Building
2	Three 10,000 gallon underground storage tanks (CWTP-3).
3	Experimental Test Area Oil House
4	Main Oil House
5a&b	CWTP-5
6	CWTP-6
7	Roll-Off Storage Area South of Maintenance Building
8	Salvage Fuel Tanks in South Tank Farm

The type of waste streams handled at each location are as follows:

Location No.	Description
1	Hazardous and non-hazardous waste oils, waste jet fuels, waste solvents.
2	F002, D001, U228, U220 - waste oils
3	Waste Oils and Solvents
4	Waste Oils and Solvents, Bulk Solids from Remediation
5a	All waste types except ignitibles in containers
5b	Equipment decontamination solutions in tanks
6	All waste types except ignitibles in containers
7	Soils and debris contaminated with hazardous and non-hazardous waste
8	Waste jet fuels and solvents

The following safety and emergency response equipment will be located near-by each of the less than 90 day storage areas. This equipment will be inspected weekly to ensure that it is maintained in good working condition:

A) Spill Control Equipment

1) Shovels, Rakes, and Brooms
2) Barrels
3) Sawdust and Absorbent Material

B) Communication Equipment

1) Telephone

C) Fire Extinguishing Equipment

1) 6 lb. ABC

D) Personnel Safety Equipment

1) Full protective clothing, face shield, boots, aprons, gloves

2) Eye Wash Station

US EPA New England
RCRA Document Management System
Image Target Sheet

RDMS Document ID # 2411

Facility Name: PRATT & WHITNEY - MAIN STREET

Facility ID#: CTD990672081

Phase Classification: R-1B

Purpose of Target Sheet:

[X] Oversized (in Site File) [ ] Oversized (in Map Drawer)

[ ] Page(s) Missing (Please Specify Below)

[ ] Privileged [ ] Other (Provide Purpose Below)

Description of Oversized Material, if applicable:

FIGURE 5, SHEET 1 OF 2: LOCATION OF LESS THAN 90 DAY STORAGE AREAS WEST HALF

[X] Map [ ] Photograph [ ] Other (Specify Below)

* Please Contact the EPA New England RCRA Records Center to View This Document *

US EPA New England
RCRA Document Management System
Image Target Sheet

RDMS Document ID # 2411

Facility Name: PRATT & WHITNEY - MAIN STREET

Facility ID#: CTD990672081

Phase Classification: R-1B

Purpose of Target Sheet:

[X] Oversized (in Site File) [ ] Oversized (in Map Drawer)

[ ] Page(s) Missing (Please Specify Below)

[ ] Privileged [ ] Other (Provide Purpose Below)

Description of Oversized Material, if applicable:

FIGURE 5, SHEET 2 OF 2: LOCATION OF LESS THAN 90 DAY STORAGE AREAS EAST HALF

[X] Map [ ] Photograph [ ] Other (Specify Below)

* Please Contact the EPA New England RCRA Records Center to View This Document *