STATE OF CONNECTICUT
DEPARTMENT OF ENVIRONMENTAL PROTECTION

NAME: Pratt & Whitney
I.D. No.: CTD 990672081
FILE LOC: R-1B
OTHER: [draft] [cover size] [Vol. 1]
ROMS # 2406

DRAFT
CONNECTICUT
HAZARDOUS WASTE PERMIT

Pursuant to Chapters 439 and 446k of the Connecticut General Statutes, a permit is issued to

Permittee: Pratt and Whitney
United Technologies Corporation
1 Financial Plaza
Hartford, Connecticut 06101

EPA I.D. No.: CTD990672081
Permit Number: DEP/HWM-043-061

to operate a hazardous waste storage facility located at Pratt and Whitney, 400 Main Street, East Hartford, Connecticut 06108 in accordance with Sections 22(a)-6 and 22a-449(c) of the Connecticut General Statutes as specified in the conditions and attachments set forth herein.

Connecticut's Hazardous Waste Management Regulations Sections 22a-449(c)-100 to 110 were published in the Connecticut Law Journal and became effective and enforceable on August 14, 1990. Therefore, all regulatory references to Connecticut Hazardous Waste Management Regulations sections 22a-449(c) 1 to 10 and 12 to 43 are hereby replaced by equivalent sections of Connecticut's Hazardous Waste Management Regulation sections 22a-449(c)-100 to 110.

All terms used in the permit are as defined in Section 22a-449(c)-100 of Connecticut's Hazardous Waste Regulations or if not defined in Connecticut's Regulations as defined in 40 CFR Part 260 and 264.141 of the Federal Regulations.

This permit is based on the data found in the Part B permit application submitted to the Department of Environmental Protection dated September 5, 1991; October 18, 1991; March 26, 1992; April 27, 1992; May 20, 1992; August 1, 1992; August 31, 1992; and September 16, 1992 and on other information submitted . The permittee must keep records of all data used to complete the permit application and any supplemental information submitted for the effective term of this permit. Any inaccuracies found in this data could lead to the termination, revocation, and reissuance, or modification of this permit and/or civil or criminal enforcement action, depending on the nature of the inaccuracy.

This permit may be modified, or alternatively revoked and reissued, as provided for in 40 CFR 270.41 and to comply with any applicable standards issued or approved under Section 22a-449(c) of the Connecticut General Statutes if standards so issued or approved:

1. Contain different conditions or are otherwise more stringent than the permit; or

2. Control any material not controlled in the permit.

The permit as modified or reissued under this paragraph shall also contain any other requirements of the Statutes then applicable.

_____
date

_____
Deputy Commissioner
Environmental Protection

This permit shall become effective on _____ and shall expire on _____.

Permit No. CTD990672081

Table of Contents

Cover Letter

Table of Contents

Section I - Standard Conditions

Section II - Permitted Activities and Permitted Materials

A. Container Storage and Management Activities

B. Tank Storage and Management Activities

C. Chemical Management
1. Specific Prohibitions
2. Permitted Materials

Section III - Compliance Schedule

Section IV - Operating Conditions

A. Operating Conditions Applicable to All Permitted Activities

B. Container Operating Conditions

C. Tank Operating Conditions

Section V - General Conditions

Section VI - Attachments

Attachment A - Waste Analysis Plan

Attachment B - Contingency Plan

Attachment C - Closure Plan

Attachment D - Training Program

Attachment E - Inspection Logs and Schedules

Section I

Standard Conditions

A. Design and Operation of the Facility

B. Effect of the Permit

C. Severability

D. Confidential Information

E. Duties and Requirements

Permit No. CTD990672081

SECTION I

HAZARDOUS WASTE PERMIT

STANDARD FACILITY CONDITIONS

A. DESIGN AND OPERATION OF FACILITY

The Permittee shall maintain and operate the permitted facility to minimize the possibility of a fire, explosion, or any unplanned sudden or non-sudden release of hazardous waste or hazardous waste constituents to air, soil, or surface water which could threaten human health or the environment.

B. EFFECT OF PERMIT

(1) Compliance with this permit during its term constitutes compliance, for purposes of enforcement, with Section 22a-449(c) of the Connecticut General Statutes. However, a Permit may be modified, revoked and reissued, or terminated during its term for cause as set forth in Section 22a-449(c)-110.

(2) The issuance of this permit does not authorize any injury to persons or property or invasion of other private rights, or any infringement of State or local law or regulations.

C. SEVERABILITY

The provisions of this permit are severable, and if any provisions of this permit, or the application of any provisions of this permit to any circumstances is held invalid, the application of such provision to other circumstances and the remainder of this Permit shall not be affected thereby.

D. CONFIDENTIAL INFORMATION

The Permittee may claim confidential any information required to be submitted by this permit in accordance with Section 1-19 of the Connecticut General Statutes.

E. DUTIES AND REQUIREMENTS

(1) Duty to comply. The permittee shall comply with all conditions of this permit except that the permittee need not comply with the conditions of this permit to the extent and for the duration such non-compliance is authorized in an emergency permit. Any permit non-compliance, except under the terms of an emergency permit, constitutes a violation of the appropriate Act and is grounds for enforcement action; for permit termination, revocation and reissuance or modification; or for denial of a permit renewal application.

(2) Duty to reapply. If the permittee wishes to continue an activity regulated by this permit after the expiration date of this permit, the permittee shall apply for and obtain a new permit.

(3) Need to halt or reduce activity not a defense. It shall not be a defense for a permittee in an enforcement action that it would have been necessary to halt or reduce the permitted activity in order to maintain compliance with the conditions of this permit.

(4) Duty to mitigate. In the event of noncompliance with the permit, the Permittee shall take all reasonable steps to minimize releases to the environment, and shall carry out such measures as are reasonable to prevent its noncompliance from having significant adverse impacts on human health or the environment.

(5) Proper operation and maintenance. The permittee shall at all times properly operate and maintain all facilities and systems of treatment and control (and related appurtenances) which are installed or used by the permittee to achieve compliance with the conditions of this permit. Proper operation and maintenance includes effective performance, adequate funding, adequate operator staffing and training; and adequate laboratory and process controls, including appropriate quality assurance procedures. This provision requires the operation of back-up or auxiliary facilities or similar systems only when necessary to achieve compliance with the conditions of the permit.

(6) Permit actions. This permit may be modified, revoked and reissued, or terminated for cause. The filing of a request by the permittee for a permit modification, revocation and reissuance, or termination, or a notification of planned changes or anticipated non-compliance, does not stay any permit condition.

(7) Property rights. The permit does not convey any property rights of any sort, or any exclusive privilege to the permittee.

(8) Duty to provide information. The permittee shall furnish to the Commissioner, within a reasonable time, any relevant information which the Commissioner may request to determine whether cause exists for modifying, revoking and reissuing, or terminating this permit or to determine compliance with this permit. The permittee shall also furnish to the Commissioner, upon request, copies of records required to be kept by this permit.

(9) Inspection and entry. The permittee shall allow the Commissioner, or an authorized representative, upon the presentation of credentials and other documents as may be required by law to:

(a) Enter at reasonable times upon the permittee's premises where a regulated facility or activity is located or conducted, or where records must be kept under the conditions of this permit;

(b) Have access to and copy at reasonable times, any records that shall be kept under the conditions of this permit;

(c) Inspect at reasonable times any facilities, equipment (including monitoring and control equipment), practices or operations regulated or required under this permit; and

(d) Sample or monitor at reasonable times, for the purposes of assuring permit compliance or as otherwise authorized by Statute, any substances or parameters at any location.

(10) Monitoring and records.

If required by law:

(a) Samples and measurements taken for the purpose of monitoring shall be representative of the monitored activity. The method used to obtain a representative sample of the waste to be analyzed must be the appropriate method from Appendix I of 40 CFR Part 261. Laboratory methods must be those from Test Methods for Evaluating Solid Waste, Physical/Chemical Methods, SW-846 as referenced in 40 CFR Part 260.11.

(b) The permittee shall retain records of all monitoring information, including all calibration and maintenance records and all original strip chart recordings for continuous monitoring instrumentation, copies of all reports required by this permit, and records of all data used to complete the application for this permit, for a period of at least 3 years from the date of the sample, measurement, report or application. This period may be

extended by request of the Commissioner at any time. The permittee shall maintain records from all groundwater monitoring wells and associated groundwater surface elevations, for the active life of the permitted facility, and for disposal facilities for the post-closure care period as well.

(c) Records for monitoring information shall include:

(1) The date, exact place and time of sampling or measurements;

(2) The individual(s) who performed the sampling or measurements;

(3) The date(s) analyses were performed;

(4) The individual(s) who performed the analyses;

(5) The analytical techniques or methods used; and

(6) The results of such analyses.

(11) Signatory requirements. All applications, reports, or information submitted to the Commissioner shall be signed and certified as required by 40 CFR 270.11.

(12) Reporting requirements.

(a) Planned changes. The permittee shall give notice to the Commissioner as soon as possible of any planned physical alterations or additions to the permitted facility.

(b) Anticipated non-compliance. The permittee shall give advance notice to the Commissioner of any planned changes in the permitted facility or activity which may result in non-compliance with permit requirements.

(c) Certification of construction. For a new permitted facility, the permittee may not treat, store or dispose of hazardous waste; and for a permitted facility being modified the permittee may not treat, store or dispose of hazardous waste in the modified portion of the permitted facility, until:

(1) The permittee has submitted to the Commissioner by certified mail or hand delivery a letter signed by the permittee and a registered professional engineer stating that the permitted facility has been constructed or modified in compliance with the permit; and

(2) A. The Commissioner has inspected the modified or newly constructed permitted facility and finds it is in compliance with the conditions of the permit; or

B. More than 15 days have elapsed since the date of submission of the letter in paragraph (1) above, and the permittee has not received notice from the Commissioner of his intent to inspect.

(d) Transfers. This permit is not transferable to any person except after notice to the Commissioner. The Commissioner may require modification or revocation and reissuance of the permit to change the name of the permittee and incorporate such other requirements as may be necessary under Section 22a-449(c)-110 and 40 CFR 270.40.

(e) Monitoring reports. Monitoring results shall be reported at the intervals specified elsewhere in this permit.

(f) Compliance schedules. Reports of compliance and non-compliance with, or any progress reports on, interim and final requirements contained in any compliance schedule of this permit shall be submitted no later than 14 days following each schedule date.

(g) Twenty-four hour reporting:

1. The permittee shall report any non-compliance which may endanger health or environment orally within 24 hours from the time the permittee becomes aware of the circumstances, including:

A. Information concerning release of any hazardous waste that may cause an endangerment to public drinking water supplies.

B. Any information of a release or discharge of hazardous waste or of a fire or explosion from the permitted HWM facility, which could threaten the environment or human health outside the permitted facility.

2. The description of the occurrence and its cause shall include:

A. Name, address, and telephone number of the owner or operator;

B. Name, address, and telephone number of the facility;

C. Date, time and type of incident;

D. Name and quantity of material(s) involved;

E. The extent of injuries, if any;

F. An assessment of actual or potential hazards to the environment and human health outside the permitted facility, where this is applicable; and

G. Estimated quantity and disposition of recovered material that resulted from the incident.

3. A written submission shall also be provided within 5 days of the time the permittee becomes aware of the circumstances. The written submission shall contain a description of the non-compliance and its cause; the period of non-compliance including exact dates and times, and if the non-compliance has not been corrected, the anticipated time it is expected to continue; and steps taken or planned to reduce, eliminate, and prevent reoccurrence of the non-compliance. The Commissioner may waive the five day written notice requirement in favor of a written report within fifteen days.

(h) Manifest discrepancy report. If a significant discrepancy in a manifest is discovered, the permittee shall attempt to reconcile the discrepancy. If not resolved within fifteen days,the permittee shall submit a letter report, including a copy of the manifest, to the Commissioner as required by Section 22a-449(c)-104(a) of Connecticut Hazardous Waste Management Regulations.

(i) Unmanifested waste report. This report shall be submitted to the Commissioner within 15 days of receipt of unmanifested waste as required by Section 22a-449(c)-104(a) of the Connecticut Hazardous Waste Management Regulations.

(j) Annual report. An annual report shall be submitted covering permitted facility activities during the previous calendar year as required by Section 22a-449(c)-104(a) of Connecticut Hazardous Waste Management Regulations.

(k) Other non-compliance. The permittee shall report all instances of non-compliance not reported under paragraphs (12)(e), (f) and (g) of this Section, at the time monitoring reports are submitted. The reports shall contain the information listed in paragraph (12)(g) of this Section.

(l) Other Information. When the permittee becomes aware that it failed to submit any relevant facts in a permit application, or submitted incorrect information in a permit application or in any report to the Commissioner, it shall promptly submit such facts or information.

(m) For the purpose of compliance with this permit, computation of time periods shall be made by the methodology specified in 40 CFR Part 124.20.

(n) Where this permit requires the submission of written reports or notification to the Regional Administrator or Commissioner, the report or notification shall be deemed submitted on the post-marked date.

(o) Waste Minimization. Within thirty (30) days of the issuance of this permit and at least annually thereafter, the Permittee shall include a certification of the following in the written operating record kept at the facility for a minimum of three years:

a) That as a generator of hazardous waste, the Permittee is implementing a program to reduce the volume and toxicity of such hazardous waste to the degree which is economically practicable; and

b) That the method the Permittee uses to treat, store or dispose of its hazardous waste is that practicable method which minimizes the present and future threat to human health and the environment.

(p) Federal and State Laws. Nothing in this permit shall be construed to prohibit any Federal, State or political subdivision thereof from imposing any requirements to the extent authorized by law, including those for site selection, which are more stringent than those imposed by this permit.

SECTION II

HAZARDOUS WASTE PERMIT

PERMITTED ACTIVITIES AND PERMITTED MATERIALS

A. Container Storage and Management Activities

1. Except as allowed by 40 CFR 262.34, the container storage and management of hazardous waste and other materials shall be limited to those areas specifically designed for container storage and management within the Centralized Waste Storage and Transfer Facility (CWS&TF) as shown on Figure D-2 included herein and as described herein. The terms hazardous waste and other materials, for the purposes of this permit, shall be defined as those "hazardous wastes and other materials" when stored, processed or managed in those areas shown on Figure D-2.

2. The Permittee shall maintain and operate the container storage area(s) within the CWS&TF as shown on Figures D-2 and D-5 included and as described herein.

3. Permitted capacity:

   a. The maximum, permitted container storage capacity for the CWS&TF shall not exceed a combined total storage capacity of 59,400.00 gallons.

   b. The permitted maximum capacities for each container storage area in the CWS&TF are further broken down into individual container storage areas. The respective maximum capacities for each of the individual container storage areas are as identified in Table I.

TABLE I

CONTAINER STORAGE AREAS

CONTAINER STORAGE AREA	MAXIMUM STORAGE CAPACITY (GALLONS)	INITIAL WASTE ASSIGNMENTS
27	2200.00	ACID LIQUIDS AND SOLIDS
28	2200.00	ACID LIQUIDS AND SOLIDS
29	2200.00	ACID LIQUIDS AND SOLIDS
30	2200.00	ACID OXIDIZERS/CHROMES, LIQUIDS AND SOLIDS[1]
31	2200.00	FIXER/ORGANIC ACIDS, LIQUIDS AND SOLIDS
32[2]	1760.00	ACID OXIDIZERS/CHROMES[1]
33	3520.00	NON RCRA/TCLP TOXIC BURNABLE SOLIDS
34	3520.00	ALKALINE/OXIDIZER, LIQUIDS AND SOLIDS[1]
35[2]	1760.00	ALKALINE/CYANIDE BURNABLE SOLIDS
36	3520.00	ALKALINE/CYANIDE LIQUIDS
37[2]	1760.00	ALKALINE/CYANIDE/TCLP TOXIC TREATABLES
38[2]	1760.00	ALKALINE/CYANIDE/TCLP TOXIC TREATABLES
39[2]	1760.00	ORGANIC AMINE COMPATIBLES
40	3520.00	ORGANIC BURNABLE SOLIDS

TABLE I (CON'T)

CONTAINER STORAGE AREAS

CONTAINER STORAGE AREA	MAXIMUM STORAGE CAPACITY (GALLONS)	INITIAL WASTE ASSIGNMENTS
41	3520.00	ORGANIC BURNABLE SOLIDS
42	3520.00	ORGANIC BURNABLE SOLIDS
43	2640.00	ZYGLO/WATER/SOLVENT BURNABLES
44	5280.00	OIL/SOLVENT BURNABLES
45	5280.00	OIL/SOLVENT BURNABLES
46	5280.00	PCBs, LIQUIDS AND SOLIDS

1 Any liquid or solid oxidizing materials, as defined in NFPA 43A or any organic peroxide formulations, as defined in NFPA 43B may only be stored in accordance with SFC II.C(1)(e).

2 No containers greater than 220 gallons shall be stored in the following container storage areas - 32, 35, 37, 38, 39. Capacities shall be based on the rated capacity of each container, (e.g., partially filled containers will be assumed full for the purpose of calculating total capacity).

4. The staging areas (See Table II) are as defined in Figure D-2. Any containers placed in the staging areas shall be evaluated/spot-tested or recharacterized in accordance with the Waste Analysis Plan within 72 hours of placement and either placed into storage or rejected.

TABLE II

CONTAINER STAGING AREAS

STAGING AREA	MAXIMUM CAPACITY (GALLONS)
48	4360.00
49	8990.00
50	7410.00
51	6410.00
52	5580.00
53	5580.00
54	5730.00
55	5500.00
56	5380.00
57	6400.00

NOTE: At no time shall more than one compatibility grouping be placed into any staging area. P&W shall note what waste grouping is present in each staging area. Compatability grouping in the staging areas shall be in accordance with 49 CFR Part 177, at a minimum.

B. Tank Storage and Management Activities

1. The storage, processing and management of hazardous wastes or other materials in tanks shall be limited to the locations shown on Figure D-2 (CWS&TF Floor Plans and Containment Calculations).

2. The Permittee shall maintain and operate the hazardous waste storage and management areas as shown in Figures D-2, D-3, D-4, and D-6 included and as described herein.

3. Permitted capacity:

a. The maximum, permitted tank storage capacity for the CWS&TF shall not exceed 96,000.00 gallons.

b. The permitted maximum capacities for each storage tank and ancillary equipment are as tabulated in Table III.

TABLE III

TANK STORAGE AREAS

TANK	CAPACITY[1]	TANK MATERIAL	LINER/COATING MATERIAL	INITIAL WASTE ASSIGNMENTS
1	6,000.00	STEEL	KYNAR	ACIDS/OXIDIZERS[2]
2	6,000.00	STEEL	KYNAR	HYDROFLUORIC ACID MIXTURES
3	6,000.00	STEEL	KYNAR	ACIDS/MINERALS
4	6,000.00	STEEL	KYNAR	ORGANIC ACIDS, FIXERS
5	6,000.00	STEEL	KYNAR	CHROMIUM SOLUTIONS
6	6,000.00	FRP TANK WITH DERAKANE 411 RESIN[3]	NONE	ALKALI TREATABLE
7	6,000.00	FRP TANK WITH DERAKANE 411 RESIN[3]	NONE	ALKALI DWW
8	6,000.00	FRP TANK WITH DERAKANE 411 RESIN[3]	NONE	ALKALI AMMONIA
9	6,000.00	FRP TANK WITH DERAKANE 411 RESIN[3]	NONE	CYANIDES

TABLE III (CON'T)

TANK STORAGE AREAS

TANK	CAPACITY[1]	TANK MATERIAL	LINER/COATING MATERIAL	INITIAL WASTE ASSIGNMENTS
10	6,000.00	STEEL	EPOXY PHENOLIC	ZYGLO AND COMPATIBLES
11	6,000.00	STEEL	EPOXY PHENOLIC	WATER/SOLVENTS
12	6,000.00	STEEL	EPOXY PHENOLIC	HIGH FLASH/SOLUBLE OILS
13	6,000.00	STEEL	EPOXY PHENOLIC	HIGH FLASH/TREATED SOLUBLE OILS
14	6,000.00	STEEL	EPOXY PHENOLIC	B1 OIL TANK
15	6,000.00	STEEL	EPOXY PHENOLIC	B2 & B3 OIL/SOLVENTS
16	6,000.00	STEEL	EPOXY PHENOLIC	PCB OILS

1 Capacities shall be based on the reported capacity as referred to in this table and under no circumstances shall any tank and/or ancillary equipment be operated in excess of such reported capacity by physical or mechanical means.

2 Any liquid or solid oxidizing materials, as defined in NFPA 43A or any organic peroxide formulations, as defined in NFPA 43B may only be stored in accordance with SFC II.C(1)(e).

3 FRP TANK is a fiberglass reinforced plastic tank.

C. Chemical Management

1. Specific Prohibition

The following hazardous wastes and other materials or categories of materials defined as indicated below are prohibited from being stored, processed and managed in those areas identified in Sections II.A and II.B.

a. Listed and characteristic wastes with a Health Hazard rating of 4, as defined by the NFPA 704, Degree of Hazard criteria, most recent edition.

b. Materials that are pyrophoric (See NFPA 704, most recent edition);

c. Shock sensitive materials (see NFPA 704, most recent edition);

d. Listed and characteristic wastes with a Reactivity Hazard rating of 4, as defined by the NFPA 704, Degree of Hazard criteria, most recent edition.

e. Special Hazards: (These limitations apply per area)

i) Liquid and Solid Oxidizing Materials, as defined in NFPA 43A;
Class 2 oxidizers in excess of 1,000 pounds,
Class 3 oxidizers in excess of 200 pounds,
Class 4 oxidizers in excess of 10 pounds.

ii) Organic Peroxide Formulations, as defined in NFPA 43B;
Class I organic peroxides,
Class II organic peroxides,
Class III organic peroxides in excess of 1,500 pounds,
Class IV organic peroxides in excess of 100,000 pounds.

iii) Gaseous Oxidizers, as defined in NFPA 43C.

2. Permitted Materials:

Subject to the provisions of Section II.C(1), the following materials are permitted to be stored by this permit:

a. The following hazardous wastes, identified by EPA Hazardous Waste I.D. code(s), are permitted for storage in the permitted storage

areas identified in Section II.A and II.B providing the Permittee first complies with Section II.C(2)(c) and II.C(2)(d):

D001, D002, D003, D004, D005, D006, D007, D008, D009, D010, D011, D012, D013, D014, D015, D016, D017, D018, D019, D020, D021, D022, D023, D024, D025, D026, D027, D028, D029, D030, D031, D032, D033, D034, D035, D036, D037, D038, D039, D040, D041, D042, D043.

F001, F002, F003, F004, F005, F006, F007, F008, F009.

P010, P015, P029, P030, P098, P104, P106.

U002, U019, U021, U031, U032, U044, U052, U055, U056, U077, U080, U108, U112, U117, U121, U122, U133, U134*, U138, U140, U144, U151, U154, U159, U161, U165, U188, U201, U210, U211, U220, U223, U226, U228, U239.

*Anhydrous Hydroflouric Acid, Hydroflouric Acid Gas, Flouhydric Acid Gas, and HFA (when used as an abbreviation for the previous synonyms) are prohibited.

b. Other materials (e.g., commercial chemicals from technical, analytical, reagent, etc. grade chemicals, chemical intermediates, products, non-hazardous wastes and any chemical mixture), except where otherwise prohibited by this permit, (e.g., shock sensitive materials) may be treated, stored, processed and managed in the permitted storage areas.

c. Prior to placing into the permitted tank storage or container storage area any hazardous wastes or other materials the Permittee shall determine that the materials can be properly managed in accordance with the terms and conditions of this permit. At a minimum, the Permittee shall:

i) Demonstrate that the hazardous waste and other materials are not specifically prohibited by Section II.C(1) and obtain the applicable degree of hazard for each material as defined in Attachment A, The Waste Analysis Plan.

ii) Characterize each waste or other material for those parameters specified in the waste analysis plan.

iii) Verify, using the procedures specified in the Waste Analysis Plan, that the hazardous waste and other material is compatible with all co-stored materials as required by Section IV.A(8).

iv) Demonstrate that the hazardous waste and other material is being stored in an appropriate container or tank as required by Section IV.B(5) for containers or, Section IV.C(3) for tanks by, at a minimum, identifying through review of available data, that the tank or containers within which the waste or other material is stored are compatible with the waste or other material and document this compatibility in the waste characterization data for each waste stream.

v) Demonstrate that the hazardous waste and other material is compatible with the containment structure or other device as required by Section IV.A(7) by, at a minimum, identifying through review of available data (e.g. - manufacturer's specifications), that the waste or other material is compatible with the coating used on the containment structure and document this compatibility in the waste characterization data for each waste stream.

vi) Demonstrate that the contingency plan adequately addresses all potential hazards posed by the hazardous waste and other material, specifically considering the suitability and compatibility of this material with protective clothing, (e.g., boots, gloves, suits, etc.) availability of appropriate respirator protection and emergency response equipment, monitoring equipment (e.g., explosion detection equipment, vapor analyzers, dragger tubes, etc.) and other relevant equipment and includes necessary response procedures by, at a minimum, documenting in the waste stream characterization data that PPE required to properly handle the waste and appropriate response procedures for handling incidents involving the waste are described in the contingency plan.

vii) Maintain an MSDS or equivalent for hazardous waste and other material approved for storage or management in accordance with Section V.I(5) to be located with all necessary reference material as indicated in the contingency plan, to be used in the event of an incident requiring the implementation of that plan.

d) The information used to make the demonstrations required by Section II.C(2)(c)(ii) must be clearly documented and maintained in the operating record until closure of the permitted facility.

US EPA New England
RCRA Document Management System
Image Target Sheet

RDMS Document ID # 2406

Facility Name: PRATT & WHITNEY - MAIN STREET

Facility ID#: CTD990672081

Phase Classification: R-1B

Purpose of Target Sheet:

[X] Oversized (in Site File) [ ] Oversized (in Map Drawer)

[ ] Page(s) Missing (Please Specify Below)

[ ] Privileged [ ] Other (Provide Purpose Below)

Description of Oversized Material, if applicable:

FIGURE D-2: FLOOR PLAN AND CONTAINMENT CAPACITY COMPUTATIONS

[X] Map [ ] Photograph [ ] Other (Specify Below)

* Please Contact the EPA New England RCRA Records Center to View This Document *

US EPA New England
RCRA Document Management System
Image Target Sheet

RDMS Document ID # 2406

Facility Name: PRATT & WHITNEY - MAIN STREET

Facility ID#: CTD990672081

Phase Classification: R-1B

Purpose of Target Sheet:

[X] Oversized (in Site File) [ ] Oversized (in Map Drawer)

[ ] Page(s) Missing (Please Specify Below)

[ ] Privileged [ ] Other (Provide Purpose Below)

Description of Oversized Material, if applicable:

FIGURE D-3, SHEET 1 OF 2: PROCESS PIPING SCHEMATIC TANKS 1 TO 16

[X] Map [ ] Photograph [ ] Other (Specify Below)

* Please Contact the EPA New England RCRA Records Center to View This Document *

US EPA New England
RCRA Document Management System
Image Target Sheet

RDMS Document ID # 2406

Facility Name: PRATT & WHITNEY - MAIN STREET

Facility ID#: CTD990672081

Phase Classification: R-1B

Purpose of Target Sheet:

[X] Oversized (in Site File) [ ] Oversized (in Map Drawer)

[ ] Page(s) Missing (Please Specify Below)

[ ] Privileged [ ] Other (Provide Purpose Below)

Description of Oversized Material, if applicable:

FIGURE D-3, SHEET 2 OF 2: PROCESS PIPING CWTP & DETAILS

[X] Map [ ] Photograph [ ] Other (Specify Below)

* Please Contact the EPA New England RCRA Records Center to View This Document *

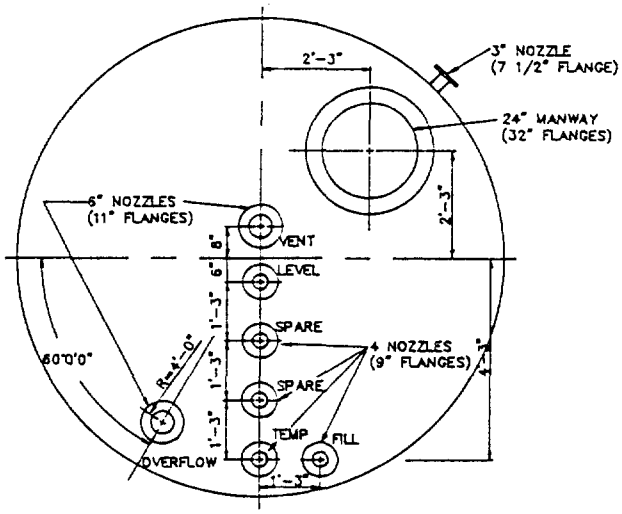

PLAN

LEVEL & SPARES NOT SHOWN

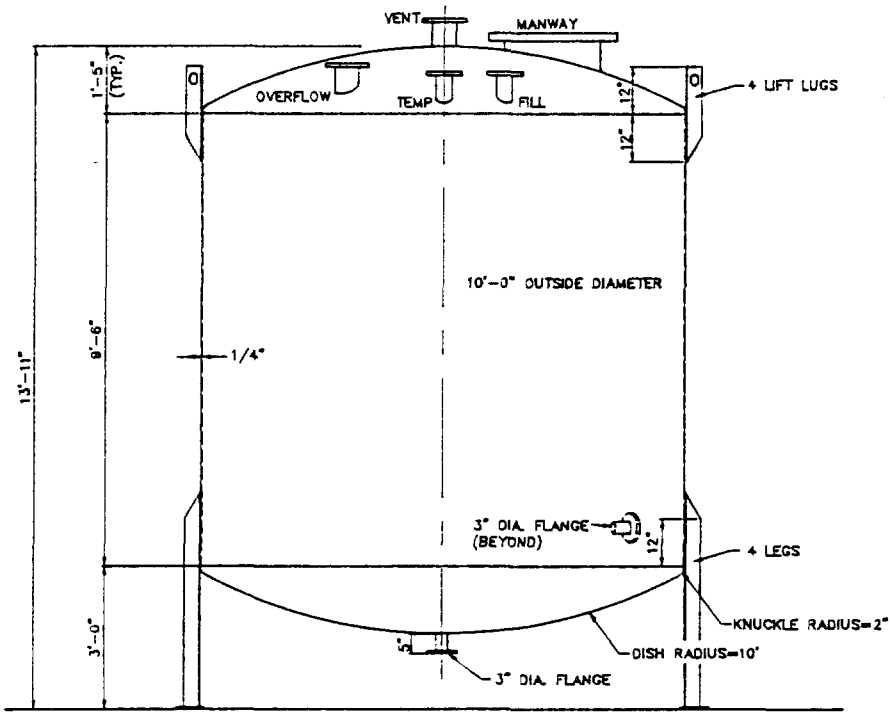

SIDE VIEW

STEEL STORAGE TANK

SCALE: 1"=1'-0"

LOUREIRO ENGINEERING ASSOCIATES, P.C.
CONSULTING ENGINEERS
PLAINVILLE, CT

FIGURE D-4
RCRA PART B PERMIT APPLICATION
TYPICAL TANK DIMENSIONS

DRD. BY	APP. BY	SCALE	DATE
J.J.L., G.H.J.	J.L.	NONE	9/5/91

COMM.NO. 9/1-25

87120-4 (a)

US EPA New England
RCRA Document Management System
Image Target Sheet

RDMS Document ID # 2406

Facility Name: PRATT & WHITNEY - MAIN STREET

Facility ID#: CTD990672081

Phase Classification: R-1B

Purpose of Target Sheet:

[X] Oversized (in Site File) [ ] Oversized (in Map Drawer)

[ ] Page(s) Missing (Please Specify Below)

[ ] Privileged [ ] Other (Provide Purpose Below)

Description of Oversized Material, if applicable:

FIGURE D-5: ARCHITECTURAL CONTAINMENT BARRIER DETAILS

[X] Map [ ] Photograph [ ] Other (Specify Below)

* Please Contact the EPA New England RCRA Records Center to View This Document *

US EPA New England
RCRA Document Management System
Image Target Sheet

RDMS Document ID # 2406

Facility Name: PRATT & WHITNEY - MAIN STREET

Facility ID#: CTD990672081

Phase Classification: R-1B

Purpose of Target Sheet:

[X] Oversized (in Site File) [ ] Oversized (in Map Drawer)

[ ] Page(s) Missing (Please Specify Below)

[ ] Privileged [ ] Other (Provide Purpose Below)

Description of Oversized Material, if applicable:

FIGURE D-6: ARCHITECTURAL TANK CURTAIN DETAILS

[X] Map [ ] Photograph [ ] Other (Specify Below)

* Please Contact the EPA New England RCRA Records Center to View This Document *

SECTION III

HAZARDOUS WASTE PERMIT

COMPLIANCE SCHEDULE

A. On or before 45 days after issuance of this Permit, Pratt and Whitney (hereinafter "P&W") of East Hartford, Connecticut shall submit to the Commissioner of the Department of Environmental Protection (hereinafter "the Commissioner") a revised Fire Certification stating P&W is in full compliance with all applicable sections of NFPA Code 30, 43A and 43B, except where RCRA requirements are more stringent and supersede the NFPA standards. Any references to operational issues and constraints are not acceptable to DEP and should be addressed and explained by P&W in an addendum to the Fire Certification. In addition, P&W shall certify to the Commissioner that all final plans and specifications used in the Fire Certification submitted on August 5, 1992 have not changed or P&W shall explain those changes and include them in the revised Fire Certification.

B. On or before June 30, 1993 certify to the Commissioner that the permitted storage facility (CWS&TF) is fully operational.

C. On or before August 16, 1993 or no later than 45 days following the aforementioned certification (Section III.B) submit to the Commissioner certification in accordance with 40 CFR Section 270.11 that all interim status RCRA facility units (CWTP-1, CWTP-2, CWTP-3, CWTP-4, CWTP-5, CWTP-6) have ceased long term storage activities.

D. On or before 60 days after issuance of this Permit certify to the Commissioner that the secondary containment berm(s) have been constructed and sealed in accordance with Specific Facility Conditions (SFC) IV.A(7), IV.B(9-10), and IV.C(5-7).

SECTION IV

HAZARDOUS WASTE PERMIT

OPERATING CONDITIONS

A. Operating Conditions Applicable to All Permitted Activities

1. Ignitable wastes shall be received and stored into the West side of the Centralized Waste Storage and Transfer Facility (CWS&TF) only (See Figure D-2 of the Section II).

2. Hazardous waste shall not be received at the permitted facility unless appropriately trained and duly designated personnel (See Attachment D) are present at the permitted facility to ensure that the waste is properly manifested, inspected, tested, transferred, stored, or otherwise managed.

3. For materials managed in the permitted areas having a hazard classification as defined in the National Fire Protection Association (NFPA), 704 Standard System for the Identification of the Fire Hazards of Materials, most recent edition having a health hazard rating of 3 the Permittee shall mark each waste container with a blue label (e.g., use of the NFPA diamond or a facsimile is acceptable). The presence of the blue label shall indicate that appropriate personal protective equipment consisting of, at a minimum, respirator protection, be worn when: opening containers or tanks or when managing wastes in open containers or tanks and shall require that employees shall utilize the buddy system (either directly or through visual contact or verbal communication with another employee) when performing these operations in the permitted facility.

4. The Permittee shall ensure the following when managing organic peroxides:

   - that the chemical name is posted on the container, tank, or unit utilized to manage the organic peroxide, and;

   - that the temperature range at which the material can be safely managed is identified and posted on the container, tank, or processing unit utilized to manage the organic peroxide.

5. At the time of waste receipt, and when preparing for shipment off-site, bulk shipments of hazardous waste shall be inspected to ensure that the waste identification information corresponds with and identifies the waste expected to be received or shipped off-site, and that the manifests and/or other required documentation information is complete. All wastes received from off-site shall be representatively sampled. The representative samples shall consist of samples from 10% of the containers for each waste stream received in a shipment and each tanker truck/tanker section containing waste. All representative samples shall be tested in accordance with the Waste Analysis Plan (WAP), Attachment A.

6. The waste characterization information supplied in the Industrial Waste Tracking System (IWTS) and/or through supporting documentation must accurately characterize the waste stream as specified in Section 1.D of the WAP.

7. The Permittee shall maintain the berm and base of the permitted waste storage and management areas such that they are free of cracks or gaps and sufficiently impervious to contain leaks, spills, and accumulated precipitation until the collected material is detected and removed. The berm and the entire base of all permitted storage and management areas shall be coated with Wisconsin Protective Coatings Corp. Laminated Vinyl Ester Coating or an approved equivalent coating that is chemically resistant to the materials managed in that area. The applied sealant shall extend vertically at least to the height of the required secondary containment. The application of the sealant shall be in conformance with the manufacturers specifications. Hazardous waste or other materials shall not be placed into, treated, stored, processed or managed in an area in which the integrity of the coating or containment area is impaired. Prior to re-applying the sealant the Permittee shall inspect the area(s) for signs of visible residue. If visible residue is found, remove the residue in accordance with Section IV.A(9)(B)(2) and (3). The coating must be re-applied as soon as possible, but no later than thirty (30) days after discovering that the integrity of the coating has been impaired due to wear, cracks, blistering, or other causes. If all other storage areas are unavailable due to the presence of other waste containers, the waste shall remain in that area until either a storage area opens and can accept the waste or the floor has been recoated, whichever happens first. Daily inspections of the impaired container storage area shall be conducted until the waste containers have been removed or the coating has been re-applied.

8. The Permittee shall post fixed markings or signs in each waste storage area clearly designating the location of each group of hazardous wastes or other materials being managed. Each sign or marking shall be secure, legible and clearly visible.

   Storage containers and tanks of hazardous wastes from a given hazardous waste compatibility group (RGN compatibility for storage areas and 49 CFR Part 177 for management areas) shall at all times, regardless of location within the CWS&TF, be separated from materials from a different compatibility group (incompatible wastes or other materials), as specified within this permit, or protected from them by means of a dike, berm, wall, or other device. Adjacent container and tank storage locations containing incompatible materials shall also incorporate the use of leak barriers and curtains as described in Figures D-5 and D-6, respectively.

9.A) Prior to changing the type of waste handled in a container storage or management area, or storage tank including all associated ancillary equipment, the Permittee shall:

   1) Remove all hazardous waste and other materials from that area;

   2) Inspect the area for presence of visible residue;

   3) If visible residue is found, remove the residue by scrubbing and washing with the appropriate cleaning solutions described in Figure IV-1 for container storage and management areas or Figure IV-2 for storage tanks and ancillary equipment, or another appropriate cleaning solution;

   4) Post a new sign for that waste storage area as applicable pursuant to Section IV.A(8);

   5) Revise as necessary Tables I and III of Section II included in this permit, and;

   6) Record, on the appropriate inspection log, the following information noted in IV.A(9)(B)(4)(a)-(d) below.

B) When a waste management area protective impermeable coating is in need of repair or re-application as outlined in Section IV.A(7), the Permittee shall:

   1) Inspect the area for presence of visible residue;

   2) If visible residue is found, remove the residue by scrubbing and washing with the appropriate cleaning solutions described in Figure IV-1 for container storage and management areas or Figure IV-2 for storage tanks and ancillary equipment, or another appropriate cleaning solution;

FIGURE IV-1

CLEANING SOLUTIONS FOR
CONTAINER STORAGE AND MANAGEMENT AREAS

DECON SOLUTION A - A solution containing 5% sodium carbonate (Na_2CO_3) and 5% trisodium phosphate (Na_3PO_4).

To 10 gallons of water, add 4 pounds of sodium carbonate (soda lime) and 4 pounds of trisodium phosphate . Stir until evenly mixed.

DECON SOLUTION B - A solution containing 10% calcium hypochlorite ($Ca(ClO)_2$).

To 10 gallons of water, add 8 pounds of calcium hypochlorite. Stir with a wooden or plastic stirrer until solution is evenly mixed.

DECON SOLUTION C - A solution containing 5% trisodium phosphate (Na_3PO_4). This solution can also be used as a general purpose rinse.

To 10 gallons of water, add 4 pounds of trisodium phosphate. Stir until evenly mixed.

DECON SOLUTION D - A dilute solution of hydrochloric acid (HCl).

To 10 gallons of water, add 1 pint of concentrated hydrochloric acid. Stir with a wooden or plastic stirrer.

TYPE OF HAZARDOUS WASTE	PREFERRED DECONTAMINATION SOLUTION
Inorganic acids, metal processing wastes.	A
Oily, greasy, unspecified wastes.	C
Inorganic bases, alkali, and caustic waste.	D
Pesticides, fungicides, chlorinated phenols.	B
Cyanides, and other non-acidic inorganic wastes.	B
Solvents and organic compounds, such as methylene chloride,and toluene.	C, A
Heavy metals, i.e., mercury, lead, cadmium.	A

FIGURE IV-2

CLEANING SOLUTIONS FOR
STORAGE TANK AND ANCILLARY EQUIPMENT

TYPE OF HAZARDOUS WASTE	PREFERRED CLEANING SOLUTION
ACIDS	CAUSTIC WASH / WATER RINSE
ALKALIS	ACID WASH / WATER RINSE
IGNITABLES	WATER RINSE / STEAM CLEAN
CHLORINATED WASTES	WATER RINSE / STEAM CLEAN
PCBs	TRIPLE SOLVENT RINSE (10% TOTAL TANK VOLUME/RINSE)
SOLVENTS	WATER RINSE / STEAM CLEAN
HALOGENATED SOLVENTS	WATER RINSE / STEAM CLEAN

3) Record in the operating log the following information to be kept until closure of the permitted facility:

- the location of the area requiring repair,
- the type and degree of impairment to the floor and/or floor coating,
- the method(s) of repair of the damaged floor and/or floor coating;

4) Record on the appropriate inspection log, the following information noted in (a)-(c), and (e) below.

(a) date and results of the inspection;

(b) name and title of person conducting the inspection;

(c) new storage area designation, as necessary;

(d) name, date, title, and signature of the authorized supervisor or his designee certifying that the area was free of visible residue prior to redesignating that area for a different waste type.

(e) name, date, title, and signature of the authorized supervisor or his designee certifying that the area was free of visible residue and the method(s) of repair/re-application required to adequately coat the area.

10. The Permittee shall inspect the permitted facility, the loading and unloading areas, and associated safety/emergency equipment in accordance with the inspection schedule incorporated herein as Attachment E.

11. The Permittee shall maintain the storage, management, and loading/unloading areas within the permitted facility so as to prevent run-on into any other area, and prevent spills and leakages in these areas from reaching and contaminating on-site soils, groundwater and surface water.

12. Spilled or leaked waste shall be removed from the containment area(s) and sumps immediately upon discovery if it presents a threat to human health or the environment or adequate secondary containment can not be maintained. Otherwise it shall be removed in a timely manner.

13. Spilled or leaked waste removed from the containment area(s) and sumps in accordance with Section IV.A(12) shall be managed as a hazardous waste unless it can be demonstrated that the material is not a hazardous waste pursuant to 22a-449(c)-101 of the Connecticut Hazardous Waste Management Regulations.

14. Prior to the bulking or other commingling of hazardous wastes and other materials within the permitted facility, the Permittee shall assure compliance with all applicable sections of the Waste Analysis Plan (WAP).

15. For each bulking or other commingling of hazardous wastes and other materials within the permitted hazardous waste storage and management areas, the Permittee shall ensure that prior to any bulking or other commingling taking place all necessary information accompanies the waste and contains at a minimum the following information:

    i) Manifest number of waste to be bulked or otherwise commingled where applicable, or the information which can be utilized to track the material being bulked/commingled with the original material received from off-site or that information which identifies the on-site generator location.

    ii) U.S. EPA waste code(s).

    iii) Facility treatment, storage or management area/unit to and from which the waste is to be transferred.

    iv) Amount of material to be bulked/commingled.

    v) Signature, initials, or other means of identification of the site technical personnel who has authorized the bulked/commingled and verified waste compatibility.

16. The storage of hazardous wastes restricted from land disposal shall not exceed one year from the date the hazardous waste was placed into storage in accordance with 40 CFR 268.50(b).

17. Except as provided in 40 CFR 268.50(d) and (e), the storage of hazardous wastes restricted from land disposal shall be subject to the following restrictions:

    a) the Permittee may store land-banned hazardous wastes solely for the purpose of the accumulation of such quantities of hazardous waste as necessary to facilitate proper recovery, treatment, or disposal;

    b) each on-site container of land-banned hazardous waste shall be clearly marked to identify its contents and the date of initial accumulation.

    c) each container of land-banned hazardous waste received from off-site shall be clearly marked to identify its contents and the date of receipt at the permitted facility shall be recorded in the facility operating record.

18. The permittee shall close the permitted facility in accordance with the closure plan, incorporated herein as Attachment C.

    The Clean-closure demonstration must document that the contaminants remaining after closure will not impact any environmental media including ground water, surface water and sediments, soils, or air in excess of recommended exposure limits or factors considering all potential routes of exposure. At a minimum the closure performance standards for each hazardous constituent of concern must meet health risk-based standards for all exposure pathways.

B. Container Operating Conditions:

1. The Permittee shall maintain aisle space to allow the unobstructed movement of personnel, drum handling equipment, fire protection equipment, spill control equipment, and decontamination equipment to all areas of the hazardous waste storage and management area operations in an emergency. Aisle space shall be maintained in accordance with this permit and all applicable NFPA standards whichever is more stringent.

   Aisle space between adjacent rows of containers or pallets of drums shall be a minimum of thirty (30) inches. Each individual container in each waste storage area shall be sufficiently accessible to allow for label examination, container inspection and shall be capable of being retrieved and relocated in an emergency.

2. If a container holding hazardous waste is not in good condition (e.g., severe rusting, apparent structural defects, etc.) or if it begins to leak, the Permittee shall transfer the hazardous waste from this container to a container that is in good condition or manage the waste in some other way that complies with this Permit and the requirements of 22a-449(c)-100 to 110 of the Connecticut Hazardous Waste Management Regulations.

3. A container holding hazardous waste must always be closed during storage, except when it is necessary to add or remove waste or sample the contents of the container.

4. A container holding hazardous waste must not be opened, handled or stored in a manner which may rupture the container or cause it to leak.

5. The Permittee shall use a container made of or lined with materials which will not react with, and are otherwise compatible with the hazardous waste to be stored, so that the ability of the container to contain the waste is not impaired. Only containers which have been approved by the U.S. Department of Transportation (DOT) for use with a given hazardous waste are acceptable for storage within the permitted facility.

6. The Permittee shall not place incompatible haz dous wastes, or incompatible hazardous wastes and other materials in the same container and shall not place hazardous waste in an unwashed container that previously held an incompatible hazardous waste or other material unless the Permittee is in compliance with Section 4 of Attachment A, the Waste Analysis Plan.

7. Drums holding hazardous waste or other materials stored or managed in the permitted container storage areas and other management areas shall be stored or managed in accordance with 40 CFR Part 264.175 (b)(2). The maximum stacking height of palletized drums in the permitted container storage areas shall be limited to two tiers high. All transporters to be received into these areas shall not be stacked. In addition, palletized wastes or other materials shall <u>not</u> be stacked within management areas, exclusive of trucks containing shipments within the truck pads.

8. The Permittee shall comply with all applicable provisions of the National Fire Protection Association (NFPA), Code 30 "Flammable and Combustible Liquids Code", 1990 edition or as revised. Areas of concern include, but are not limited to; design, construction, and operation of separate inside storage areas, indoor storage, protection requirements for protected storage of liquids and fire control. The stacking heights for flammable and combustible liquids shall be regulated as defined in NFPA 30. The maximum pile heights and maximum quantity per pile arranged as palletized and/or solid pile storage, shall comply with NFPA 30, Table 4-4.2.7 if unprotected or NFPA 30, Table 4-6.1(a) if protected in accordance with Section 4-6.

9. The Permittee shall maintain each storage area base as shown on the applicable Exhibits referenced in Section II.(A)(2) and as described herein to provide adequate containment capacity. Each containment area base, where applicable must be maintained to direct liquids to the sump in that area. The base of each storage area and the sump in that area shall not be obstructed in any manner which restricts or prevents the flow of liquids to the sump, where applicable.

10. The Permittee shall maintain and operate the containment system in the storage area to ensure sufficient capacity to contain 10% of the volume of all waste or 100% of the volume of the largest container, which ever is greater. Any device or structure creating negative containment volume (e.g., containers, equipment, pallets, etc., within the secondary containment zone) must be acknowledged and accounted for in the determination of the required secondary containment volume.

11. Prior to placing any container of hazardous waste or other materials into the permitted hazardous waste storage areas, the container shall be visually inspected by the permitted facility technical personnel or his/her designee (e.g., materials handler) to ensure that the waste container is properly labeled. If a discrepancy is found, this information must be reported to an immediate supervisor or an appropriate supervisor prior to further processing of the material.

12. The Permittee shall transport drums on-site using fork lift trucks, hand trucks and/or other equipment capable of transporting containers. The transfer of containers shall be performed only by personnel experienced and trained in the use of such equipment.

13. The Permittee shall make allowances for the grounding of any drums of ignitable materials stored or managed in the permitted facility at least during the addition and removal of wastes to and from containers.

14. Under no circumstances may hazardous wastes and other materials be kept in the transporter unloading areas, truck pads or staging areas in the permitted facility for greater than seventy-two (72) hours. The Permittee must be able to verify for each container or for each shipment of containers of waste or other material which will confirm that the container has not exceeded this time limit. In addition, containers or a shipment of containers of hazardous wastes and other materials shall not be unnecessarily retained in these areas after the required analytical work or evaluations have been completed.

15. The waste staging area and the loading/unloading area(s) (See Figure D-2) utilized for the staging of wastes shall be managed in accordance with the following restrictions:

    a) The waste staging area, and the loading/unloading area(s) utilized for the staging of wastes shall be inspected daily when in use or shall otherwise be inspected at a minimum on a weekly basis. The pads shall be inspected both before and after each tanker/truck to be loaded/unloaded when in use and at a minimum on a weekly basis. These inspections shall be entered in the appropriate inspection sheet(s) for the area(s) being inspected.

b) The placement of containers in the staging area shall at all times allow for at a minimum a thirty (30) inch aisle spacing for all wastes and other materials, and shall allow facility and/or emergency response personnel access for inspection and emergency response.

C. Tank Operating Conditions:

1. The Permittee shall maintain sufficient floor space in the tank storage areas to allow the unobstructed movement of personnel, equipment, fire protection equipment, spill control equipment, and decontamination equipment to all areas of the hazardous waste tank storage operations in an emergency.

2. If a tank holding hazardous wastes or other material is not in good condition (e.g., apparent structural defects) or if it begins to leak, the Permittee shall transfer the hazardous waste and other materials from this tank to a tank or unit that is in good condition or manage the material in some other way that complies with this Permit and the requirements of 22a-449(c)-100 to 110 of the Connecticut Hazardous Waste Management Regulations.

3. The Permittee shall use tank systems including the tank secondary containment areas and ancillary equipment made of, lined, and/or coated with materials which will not react with, and are otherwise compatible with the hazardous waste or other materials to be stored or managed so that the ability of the tank or ancillary equipment to contain the material is not impaired.

4 Design and installation of new tank systems or components.

a) Owners or operators of new tank systems or components must obtain and submit to the Commissioner within 60 days of issuance of this permit, a written assessment, reviewed and certified by an independent, qualified registered professional engineer, in accordance with Part 270.11(d), attesting that the tank system has sufficient structural integrity and is acceptable for the storing of hazardous waste. The assessment must show that the foundation, structural support, seams, connections, and pressure controls (if applicable) are adequately designed and that the tank system has sufficient structural strength, compatibility with the waste(s), and other material(s) to be stored, and corrosion protection to ensure that it will not collapse, rupture, or fail. This assessment, which will be used by the Commissioner to review and approve or disapprove the acceptability of the tank system design, must include, at a minimum, the following information:

1) Design standard(s) according to which tank(s) and/or the ancillary equipment are constructed;

2) Hazardous characteristics of the waste(s) to be handled;

3) Design considerations to ensure that :

   i) Tank foundations will maintain the load of a full tank;

   ii) Tank systems will be anchored to prevent flotation or dislodgement where the tank system is placed in a saturated zone, or is located within a seismic fault zone subject to the standards of Part 264.18(a); and

   iii) Tank systems will withstand the effects of a frost heave.

b) The owner or operator of a new tank system must ensure that proper handling procedures are adhered to in order to prevent damage to the system during installation. Prior to covering, enclosing, or placing a new tank system or component in use, an independent, qualified installation inspector or an independent, qualified, registered professional engineer, either of whom is trained and experienced in the proper installation of tank systems or components, must inspect the system for the presence of any of the following items:

   (1) Weld breaks;

   (2) Punctures;

   (3) Scrapes of protective coatings;

   (4) Cracks;

   (5) Corrosion

   (6) Other structural damage or inadequate construction/installation.

   All discrepancies must be remedied before the tank system is covered, enclosed, or placed in use.

c) All new tanks and ancillary equipment must be tested for tightness prior to being covered, enclosed, or placed in use. If a tank system is found not to be tight, all repairs necessary to remedy the leak(s) in the system must be performed and the tank system tested again for tightness prior to the tank system being covered, enclosed, or placed into use.

d) Ancillary equipment must be supported and protected against physical damage and excessive stress due to settlement, vibration, expansion, or contraction.

e) The owner or operator must obtain and keep on file at the facility written statements by those persons required to certify the design of the tank system and supervise the installation of the tank system in accordance with the requirements of paragraphs (b) through (d) of this section, that attests that the tank system was properly designed and installed and that repairs, pursuant to paragraphs (b) and (c) of this section, were performed. These written statements must also include the certification statement as required in Part 270.11(d) of 40 CFR.

5. Secondary containment systems for the tank storage areas and ancillary equipment must:

a) be designed, installed, and operated to prevent any migration of wastes or accumulated liquid out of the system to the soil, ground water, or surface water at any time during the use of the tank system,

b) be capable of detecting and collecting released and accumulated liquids until the collected material is removed,

c) be maintained as shown on the applicable Exhibits identified in Section II.B(2) and as described herein to provide adequate containment capacity, and

d) not be obstructed in any manner which restricts or prevents the flow of liquids to the sump, where applicable.

6. To meet the requirements of Section IV.C(5) above, secondary containment systems must be at a minimum:

a) Constructed of or lined with materials that are compatible with the materials to be placed in the tank system or ancillary equipment and must have sufficient strength and thickness to prevent failure owing to pressure gradients (including static head and external hydrological forces), physical contact with the materials to which it is exposed, climatic conditions, and the stress of daily operation (including stresses from nearby vehicular traffic).

b) Placed on a foundation or base capable of providing supported to the secondary containment system, resistance to pressure gradients above and below the system, and capable of preventing failure due to settlement, compression, or uplift;

c) Provided with a leak-detection system that is designed and operated so that it will detect the failure of either the primary or secondary containment structure or the presence of any release of hazardous waste or accumulated liquid in the secondary containment system within 24 hours, or at the earliest practical time if the owner or operator can demonstrate to the Commissioner that existing detection technologies or site conditions will not allow detection of a release within 24 hours;

d) Sloped or otherwise designed or operated to drain and remove liquids resulting from leaks, spills, or precipitation. Spilled or leaked waste and accumulated precipitation must be removed from the secondary containment system within 24 hours, or in as timely a manner as is possible to prevent harm to human health and the environment, if the owner or operator can demonstrate to the Commissioner that removal of the released waste or accumulated precipitation cannot be accomplished within 24 hours;

7. Secondary containment for tanks must include one or more of the following devices:
   - A liner (external to the tank);
   - A vault;
   - A double-walled tank; or
   - An equivalent device as approved by the Commissioner.

In addition to the requirements of 40 CFR 264.193(a), and Section IV.C(6), secondary containment systems must satisfy the following requirements as applicable to the permitted facility:

a) Vault systems must be:

i) Designed or operated to contain 100 percent of the capacity of the largest tank within its boundary;

ii) Designed or operated to prevent run-on, precipitation or infiltration of precipitation into the secondary containment system unless the collection system has sufficient excess capacity to contain run-on, precipitation or infiltration. Such additional capacity must be sufficient to contain precipitation from a 25-year, 24-hour rainfall event. Any device or structure creating negative containment volume (e.g., equipment, etc. within the secondary containment

zone) shall be acknowledged and accounted for in the determination of the required secondary containment volume. Spilled or leaked waste or accumulated precipitation shall be removed from the containment area(s) and sumps immediately if it presents a threat to human health or the environment or adequate secondary containment can not be maintained, otherwise it shall be removed in a timely manner:

iii) Constructed with chemical-resistant water stops in place at all joints (if any);

iv) Provided with an impermeable interior coating or lining that is compatible with the stored waste and that will prevent migration of waste into the concrete;

v) Provided with a means to protect against the formation of and ignition of vapors within the containment system, if the waste being stored or managed:

1) Meets the definition if ignitable waste under Part 261.21 of 40 CFR; or

2) Meets the definition of reactive waste under Part 261.21 of 40 CFR, and may form an ignitable or explosive vapor.

vi) Provided with an exterior moisture barrier or be otherwise designed or operated to prevent migration of moisture into the secondary containment system if the system is subject to hydraulic pressure.

b) Ancillary equipment must be provided with secondary containment (e.g., trench, jacketing, double-walled piping) that meets the requirements of Section IV.C(6), except for:

i) Above ground piping (exclusive of flanges, joints, valves, and other connections) that are visually inspected for leaks on a daily basis;

ii) Welded flanges, welded joints, and welded connections, that are visually inspected for leaks on a daily basis;

iii) Seal-less or magnetic coupling pumps and seal-less valves, that are visually inspected for leaks on a daily basis; and

iv) Pressurized above ground piping systems with automatic shut-off devices (e.g., excess flow check valves, flow metering shutdown devices, loss of pressure actuated shut-off devices) that are visually inspected for leaks on a daily basis.

8. General Operating Requirements.

a) Hazardous wastes or other materials must not be placed in a tank system if they could cause the tank, its ancillary equipment, or the containment system to rupture, leak, corrode, or otherwise fail.

b) The owner or operator must use appropriate controls and practices to prevent spills and overflows from tank or containment systems. These include at a minimum:

1) Spill prevention controls (e.g., check valves, dry disconnect couplings);

2) Over-fill prevention controls (e.g., level sensing devices, high level alarms, automatic feed cutoff, or bypass to a standby tank); and

9. Inspections.

a) The owner or operator must inspect, where present, at least once each operating day:

1) Over-fill/spill control equipment (e.g., waste-feed cutoff systems, bypass systems, and drainage systems) to ensure that it is in good working order;

2) The above ground portions of the tank system, if any, to detect corrosion or releases of waste;

3) Data gathered from monitoring equipment and leak-detection equipment, (e.g., pressure and temperature gages, monitoring wells) to ensure that the tank system is being operated according to its design; and

4) The construction materials and the area immediately surrounding the externally accessible portion of the tank system, including secondary containment structures (e.g., dikes) to detect erosion or signs of releases of hazardous waste (e.g., wet spots, dead vegetation).

b) The owner or operator must document in the operating record for the permitted facility an inspection of, at a minimum, those items in paragraph a) of this condition.

10. Response to leaks or spills and disposition of leaking or unfit-for-use tank systems.

A tank system or secondary containment system from which there has been a leak or spill, or which is unfit for use, must be removed from service immediately, and the owner or operator must satisfy the following requirements:

a) Cessation of use; prevent flow or addition of wastes. The owner or operator must immediately stop the flow of hazardous waste into the tank system or secondary containment system and inspect the system to determine the cause of the release.

b) Removal of waste from tank system or secondary containment system.

1) If the release was from the tank system, the owner/operator must, within 24 hours after detection of the leak or, if the owner/operator demonstrates to the Commissioner and the Commissioner agrees that it is not possible, at the earliest practical time, remove as much of the waste as is necessary to prevent further release of hazardous waste to the environment and to allow inspection and repair of the tank system to be performed. The owner or operator shall make all reasonable efforts to mitigate the effects of the release.

2) If the material released was to a secondary containment system, all released materials must be removed within 24 hours or in as timely a manner as is possible to prevent harm to human health and the environment.

c) Containment of visible releases to the environment. The owner/operator must immediately conduct a visual inspection of the release and, based upon that inspection:

1) Prevent further migration of the leak or spill to soils or surface waters; and

2) Remove, and properly dispose of, any visible contamination of the soil or surface water.

d) Notification, reports.

1) Any release to the environment must be reported to the Commissioner immediately upon its detection. Any release that has been reported to the National Response Center pursuant to 40 CFR Part 302, must still be reported separately to the Commissioner using the 24-hour Emergency Spill Response telephone number at (203) 566-3338 or, if that number is incorrect, the telephone number listed for Emergency Spill Response with the telephone company.

2) Within 15 days of detection of a release to the environment, a report containing the following information must be submitted to the Commissioner of the CT DEP:

i) Likely route of migration of the release;

ii) Characteristics of the surrounding soil (soil composition, geology, hydrogeology, climate);

iii) Results of any monitoring or sampling conducted in connection with the release (if available). If sampling or monitoring data relating to the release are not available within 15 days, these data must be submitted to the Commissioner of the CT DEP as soon as they become available.

iv) Proximity to downgradient drinking water, surface water, and populated areas; and

v) Description of response actions taken or planned.

e) Provision of secondary containment, repair, or closure.

1) Unless the owner/operator satisfies the requirements of paragraphs e(2) through e(4) of this section, the tank system must be closed in accordance with Part 264.197 of 40 CFR.

2) If the cause of the release was a spill that has not damaged the integrity of the system, the owner/operator may return the system to service as soon as the released waste is removed and repairs, if necessary, are made.

3) If the cause of the release was a leak from the primary tank system into the secondary containment system, the system must be repaired prior to returning the tank system to service.

4) If the source of the release was a leak to the environment from a component of a tank system without secondary containment, the owner/operator must provide the component of the system from which the leak occurred with secondary containment that satisfies the requirements of Part 164.193 of 40 CFR before it can be returned to service, unless the source of the leak is an above ground portion of a tank system that can be inspected visually. If the source is an above ground component that can be inspected visually, the component must be repaired and may be returned to service without secondary containment as long as the requirements of paragraph (f) of this section are satisfied. If a component is replaced to comply with the requirements of this sub-paragraph, that component must satisfy the requirements for new tank systems or components in Parts 264.192 and 264.193 of 40 CFR. Additionally, if a leak has occurred in any portion of a tank system component that is not readily accessible for visual inspection (e.g., the bottom of an in-ground or on-ground tank), the entire component must be provided with secondary containment in accordance with Part 264.193 of 40 CFR prior to being returned to use.

f) Certification of major repairs. If the owner or operator has repaired a tank system in accordance with paragraph (e) of this section, and the repair has been extensive (e.g., installation of an internal liner; repair of a ruptured primary containment or secondary containment vessel), the tank system must not be returned to service unless the owner/operator has obtained a certification by an independent, qualified, registered professional engineer in accordance with Part 270.11(d) of 40 CFR that the repaired system is capable of handling hazardous wastes without release for the intended life of the system. This certification must be submitted to the Commissioner within seven (7) days after returning the tank system to use.

11. Special requirements for incompatible wastes.

a) Incompatible wastes, or incompatible waste and materials, must not be placed in the same tank system or in a tank system which shares the secondary containment area with other tank systems, process systems or units, unless Part 264.17(b) of 40 CFR is complied with.

b) Hazardous waste must not be placed in a tank or process system that has not been decontaminated and that previously held an incompatible waste or material, unless Part 264.17(b) of 40 CFR is complied with.

12. The Permittee shall maintain and repair the waste storage tanks and management areas and their foundations and appurtenant structures so as to ensure that the areas are capable of withstanding the maximum loading they will be subjected to without leakage or structural failure.

13. The Permittee shall maintain the sight gauges and/or high level alarms, etc. of the storage tanks so as to prevent over-filling and over-topping of these units.

Permit No. CTD990672081

Section V

General Conditions

A. Enforcement Actions

B. Required Notices

C. Waste Analysis

D. Security

E. General Inspection Requirements

F. Personnel Training

G. General Requirements for Ignitable, Reactive, or Incompatible Wastes and/or Other Co-stored Materials

H. Preparedness and Prevention

I. Contingency Plan

J. Manifest System

K. Operating Record

L. Availability, Retention, and Disposition of Records

M. Annual Reports

N. Closure

O. Financial Responsibility

P. Air Emission Standards for Process Vents

Q. Air Emission Standards for Equipment Leaks

R. Applicable Laws

Permit No. CTD990672081

SECTION V

HAZARDOUS WASTE PERMIT

GENERAL FACILITY CONDITIONS

A. Enforcement Actions

Notwithstanding any provision of this permit, enforcement actions may be brought pursuant to Section 7003 of RCRA, Section 22a-6 of the Connecticut General Statutes, or any other applicable law, for any violation of any applicable law.

B. Required Notices

Before transferring ownership or operation of a permitted facility during its operating life, the Permittee shall notify the new owner or operator in writing of the requirements of 40 CFR Parts 270 and 264, and of Connecticut's Hazardous Waste Management Regulations.

C. Waste Analysis

1. The Permittee shall follow the procedures described in the attached waste analysis plan, incorporated herein as Attachment A.

2. The Permittee shall keep the waste analysis plan at the permitted facility at all times until final closure of the permitted facility.

3. The Permittee shall maintain in the operating record copies of all information required to demonstrate compliance with the Waste Analysis Plan.

4. The Permittee shall at all times have available for inspection and review by CT DEP or EPA copies of all forms, procedural documents, manuals, etc., used to achieve compliance with the Waste Analysis Plan.

5. Unless otherwise specified in the waste analysis plan, all waste characterization and analytical work performed in accordance with the facility waste analysis plan shall be as specified in the EPA document SW-846, Test Methods for Evaluating Hazardous Waste, November, 1986, or as most recently updated, or by other EPA approved methods.

D. Security

1. The Permittee shall prevent the unknowing entry, and minimize the possibility for the unauthorized entry, of persons or livestock onto the active portion of the permitted facility.

2. The Permittee shall conduct the following activities:

a) All entrances to the Centralized Waste Storage and Treatment Facility (CWS&TF) building must be locked at all times unless personnel are present.

b) Access to the permitted hazardous waste storage areas shall be limited to the emergency coordinators, security personnel or other authorized personnel.

c) Signs bearing the legend, "Danger - Unauthorized Personnel Keep Out", shall be posted at each entrance to each hazardous waste treatment and storage area and at other locations in sufficient numbers to be seen from any approach to these storage areas. The legend shall be written in English and shall be legible from a distance of at least 25 feet.

d) The Permittee shall maintain all security systems in good repair throughout the active life of the permitted facility.

E. General Inspection Requirements

1. The Permittee shall follow the inspection schedule incorporated herein as Attachment E, and as modified herein and shall comply with the requirements contained in 40 CFR 264.15. The Permittee shall remedy any deterioration or malfunction discovered by an inspection as required by 40 CFR 264.15(c). Records of inspections shall be kept as required by 40 CFR 264.15(d).

2. The Permittee shall keep the inspection schedule at the facility at all times.

F. Personnel Training

1. The Permittee shall conduct personnel training as required by 40 CFR 264.16. This training program shall follow the outline incorporated herein as Attachment D, and as modified herein.

2. Permitted facility personnel must successfully complete the training program outlined by Attachment D and as modified herein within six (6) months after the effective date of their employment or assignment to a

permitted facility, or to a new position at the permitted facility, whichever is later. Employees must not work in unsupervised positions until they have completed the training program.

3. Permitted facility personnel shall take part in an annual review of the training as specified in Attachment D.

4. The Permittee shall maintain the following documents and records at the facility in accordance with 40 CFR 264.16(d):

   a) The job title for each position at the permitted facility related to hazardous waste management, and the name of the employee filling each job; and

   b) A written job description for each position listed under Permit Condition V.F(4)(a) above. This description may be consistent in its specification of descriptions for other similar positions in the same company location or bargaining unit, but must include the requisite skill, education, or other qualifications, and duties of employees assigned to each position.

   c) A written description of the type and amount of both introductory and continuing training that will be given to each person filling a position listed under Permit Condition V.F(4)(a) above.

   d) Records that document that the training or job experience required by 40 CFR 264.16(a), (b), and (c) and specified in Attachment D has been given to, and completed by, permitted facility personnel.

5. The Permittee shall keep training records on current personnel until closure of the permitted facility, and training records on former employees for at least three (3) years from the date the employee last worked at the facility. Personnel training records may accompany personnel transferred within the same company.

6. The training director/instructor shall be a person who is trained in hazardous waste management and who is capable, through a combination of training and/or experience, of properly training permitted facility employees in all facets of hazardous waste handling, and storage in accordance with Attachment D.

7. The training program shall provide instruction to employees on the hazardous wastes and other materials which have an NFPA 704 Health Hazard rating of 3 and shall at a minimum address, the hazards associated with such materials and include such information as proper personnel protective equipment, safe handling practices and material identification.

G. General Requirements for Ignitable, Reactive, or Incompatible Waste, and/or other Co-stored Materials

1. The Permittee shall take precautions to prevent accidental ignition or reaction of ignitable or reactive waste or other co-stored materials. These wastes or other co-stored materials shall be separated and protected from sources of ignition or reaction including but not limited to: open flames, smoking, cutting, welding, hot surfaces, frictional heat, sparks (static, electrical, or mechanical), spontaneous ignition (e.g. from heat producing chemical reactions), and radiant heat. All open flames, cutting, and welding within the proximity of the permitted hazardous waste storage areas shall be allowed only with the written approval of the designated safety engineer or the P&W Fire Department. The written approval shall be maintained at the location of the activity during the entire time the activity is taking place. While ignitable or reactive waste or other such co-stored material is being stored, handled, or otherwise managed in the hazardous waste storage area(s), no smoking shall be allowed. "No Smoking" signs must be conspicuously placed in the hazardous waste storage areas and wherever there is a possible hazard from ignitable or reactive waste or other such co-stored material. Containers holding ignitable, or reactive wastes or other such co-stored materials stored in a hazardous waste storage area must be located at least 15 meters (50 feet) from the facility property line.

2. The Permittee shall take precautions to prevent reactions which:

a) Generate extreme heat or pressure, fire or explosions, or violent reactions;

b) Produce uncontrolled toxic mists, fumes, dusts, or gases in sufficient quantities to threaten human health or the environment;

c) Produce uncontrolled flammable fumes or gases in sufficient quantities to threaten human health or the environment;

d) Damage the structural integrity of the devices or Facility;

e) Through other like means, threaten human health or the environment.

H. Preparedness and Prevention

1. The Permittee shall design, construct, maintain, and operate the permitted facility to minimize the possibility of a fire, explosion, or any unplanned, sudden or non-sudden release of hazardous waste or hazardous waste constituents to air, soil, or surface water which could threaten human health or the environment.

2. The Permittee shall equip the permitted facility with, at a minimum, the emergency equipment specified in Appendices 7-9 and 7-10 of the contingency plan, herein included as Attachment B and shall locate them as shown or described in the contingency plan (Attachment B, and Appendices 7-9, and 7-10).

3. The Permittee shall maintain and test (where appropriate), in order to assure proper operation in time of emergency, all permitted facility communications or alarm systems, gas detection equipment, fire protection equipment, spill control equipment, and decontamination equipment. Refer to the specific inspection schedules included in Attachment E, Inspection Schedule for the frequency of inspection for those items noted above.

4. The Permittee shall ensure that whenever hazardous waste is being poured, mixed, sampled or otherwise handled, within the permitted hazardous waste treatment or storage areas, all personnel involved in the operation must have immediate access to an internal alarm or emergency communication device, either directly or though visual or oral contact with another employee. If there is ever just one employee on the premises while the permitted facility is operating, they must have immediate access to a device, such as a telephone (immediately available at the scene of operation) or a hand-held two-way radio, capable of summoning external emergency assistance.

5. The Permittee shall within thirty (30) days of issuance of this permit submit copies of the approved contingency plan by certified mail to appropriate police, fire departments, hospitals, and emergency response teams in the vicinity of the facility, including, but not limited to:

   - Town of East Hartford Police Department
   - Town of East Hartford Fire Department
   - Hartford Hospital
   - East Hartford Emergency Planning Committee

6. The Permittee shall notify the local emergency officials listed in Section V.H(5) above, within fifteen (15) days, whenever any changes occur in the permitted facility layout or operation, or in the contingency plan itself, which materially affects contingency plan implementation or execution.

7. The Permittee shall within thirty (30) days of permit issuance send a letter by certified mail attempting to make arrangements to familiarize police, fire departments, and emergency response teams with the layout of the permitted facility, properties of hazardous waste handled at the permitted facility and associated hazards, places where permitted facility personnel would normally be working, entrances to and roads inside the facility, and possible evacuation routes.

8. The Permittee shall retain in the operating record until closure of the permitted facility, copies of letters and certified mail receipts required by Section V.H(6) and (7), and documentation of any responses to those letters.

I. Contingency Plan

1. The Permittee shall immediately carry out the provisions of the contingency plan, incorporated herein as Attachment B, and follow the emergency procedures described below, whenever there is a fire, explosion, or release of hazardous waste or its constituents which threatens or could threaten human health or the environment:

a) Whenever there is an imminent or actual emergency situation, the emergency coordinator (or his designee when the emergency coordinator is on call) must immediately:

i) Activate internal permitted facility alarms or communication systems, where applicable, to notify all permitted facility personnel; and

ii) Notify appropriate State or local agencies with designated response roles if their help is needed.

b) Whenever there is a release, fire, or explosion, the emergency coordinator must immediately identify the character, exact source, amount and areal extent of any released materials. He may do this by observation or review of facility records or manifests, and, if necessary, by chemical analysis.

c) Concurrently, the emergency coordinator must assess possible hazards to human health or the environment that may result from the release, fire, or explosion. This assessment must consider both direct and indirect effects of the release, fire, or explosion (e.g., the effects of any toxic, irritating, or asphyxiating gases that are generated, or the effects of any hazardous surface water run-off from water or chemical agents used to control fire and heat-induced explosions).

d) If the emergency coordinator determines that the permitted facility has had a release, fire, or explosion which could threaten human health, or the environment outside the facility, he must report his findings as follows:

i) If his assessment indicates that evacuation of local areas may be advisable, he must immediately notify appropriate local and state authorities, including those organizations as outlined in the List of Emergency Response Agencies. He must be available to

help appropriate officials decide whether local areas should be evacuated; and

ii) He must immediately notify the Commissioner using the 24-hour emergency spill response number (203) 566-3338, and provide the above information;

iii) He must also immediately notify either the government official designated as the on-scene coordinator for that geographical area, (in the applicable regional contingency plan under 40 CFR 1510) or the National Response Center using their 24-hour toll free number 800/424-8802. The report must include:

a. Name and telephone number of reporter;
b. Name and address of facility;
c. Time and type of incident (e.g., release, fire);
d. Name and quantity of material(s) involved, to the extent known;
e. The extent of injuries, if any, and
f. The possible hazards to human health, or the environment, outside the facility.

e) During an emergency, the emergency coordinator must take all reasonable measures necessary to ensure that fires, explosions, and releases do not occur, re-occur, or spread to other hazardous waste and virgin products at the facility. These measures must include, where applicable, stopping processes and operations, collecting and containing released waste, and removing or isolating containers.

f) If the permitted facility stops operations in response to a fire, explosion, or release, the emergency coordinator must monitor for leaks, pressure buildup, gas generation, or ruptures in valves, pipes, or other equipment, wherever this is appropriate.

g) Immediately after an emergency, the emergency coordinator must provide for treating, storing, or disposing of recovered waste, contaminated soil or surface water, or any other material that results from a release, fire, or explosion at the permitted facility.

h) The emergency coordinator must ensure that, in affected area(s) of the facility:

i) No waste that may be incompatible with the released material is stored until cleanup procedures are completed; and

ii) All emergency equipment listed in the contingency plan is cleaned and fit for its intended use before operations are resumed.

i) The Permittee must notify the Commissioner and appropriate State and local authorities, that the permitted facility is in compliance with Section V.I(1)(h) before operations are resumed in the affected area(s) of the permitted facility.

j) The Permittee must note in the operating record the time, date and details of any incident that requires implementing the contingency plan. Within fifteen (15) days after the incident, he must submit a written report on the incident to the Commissioner. The report must include:

i) Name, address, and telephone number of the owner or operator;

ii) Name, address, and telephone number of the facility;

iii) Date, time, and type of incident (e.g., fire, explosion);

iv) Name and quantity of material(s) involved;

v) The extent of injuries, if any;

vi) An assessment of actual or potential hazards to human health or the environment, where this is applicable; and

vii) Estimated quantity and disposition of recovered material that resulted from the incident.

2. The Permittee shall maintain at the facility a copy of the contingency plan, and all revisions to the plan, at all times. The emergency coordinator and alternate emergency coordinator(s), and any other personnel involved in the contingency plan implementation shall receive copies of the contingency plan and all updates to the contingency plan and shall be briefed on the implications of any such changes.

3. The Permittee shall review and immediately amend, if necessary, the contingency plan whenever:

a) this Permit is revised;

b) the plan fails in an emergency;

c) the permitted facility changes in its design, construction, operation, maintenance, or other circumstances in a way that materially increases the potential for fires, explosions, or releases of hazardous waste or hazardous constituents, or changes the response necessary in an emergency;

d) the list of emergency coordinators changes; or

e) the list of emergency equipment changes.

The Permittee shall submit to the Commissioner, in writing, any modifications to the contingency plan. These modifications shall be accompanied by a request for permit modification in accordance with 22a-449(c)-110 of the Connecticut Hazardous Waste Management Regulations and 40 CFR 270.41-42.

4. The Permittee shall ensure that at all times there shall be at least one employee either on the facility premises or on call (e.g., available to respond to an emergency by reaching the permitted facility within a short period of time) with the responsibility for coordinating all emergency response measures. This emergency coordinator must be thoroughly familiar with all aspects of the permitted contingency plan, all operations and activities at the permitted facility, the location and characteristics of waste handled, the location of all records within the facility, and the facility layout. In addition, this person must have the authority to commit the resources needed to carry out the contingency plan.

5. The Permittee shall comply with the following:

a) Maintain up to date inventory lists of all wastes and other materials managed at the permitted facility. A list shall be maintained for each area, tank and unit which is utilized to manage hazardous wastes and other materials;

b) The contingency plan must specify the location of reference information on the wastes and other materials as identified in this permit as being capable of being managed and specifically as identified for each generator by the Internal Waste Manifest Forms, the Industrial Waste Tracking System, or Material Safety Data Sheets (MSDSs) or equivalents. The contingency plan must be kept at the same location as the reference information on the wastes and other materials;

c) Internal Waste Manifest Forms, Industrial Waste Tracking System, laboratory analysis sheets, Material Safety Data Sheets (MSDSs) or MSDS equivalents must be available to the emergency coordinator or his designee on a 24 hour-a-day, 7 day-a-week basis;

d) Information available through Internal Waste Manifest Forms, Industrial Waste Tracking, laboratory analysis sheets, Waste Product Records, Materials Safety Data Sheets (MSDSs) or MSDS equivalents must include all the information which must be known to treat, store, or dispose of the wastes and other materials in accordance with Sections of 22a-449(c)-100 through 110 of the Regulations of the Connecticut State Agencies. The available information may contain but may not be limited to the following:

- chemical and common name;
- general composition;
- physical state (e.g., liquid, solid, gas, sludge, gel, etc.);
- relevant physical properties (e.g., for liquids, pH, specific gravity, flash point, vapor pressure; for vapors, explosion limits, vapor density; and for solids, combustibility); Note: approximations of physical properties are acceptable where this information is not available from published literature, manufacturer's information, or process knowledge.
- explosion/fire hazard;
- exposure/toxicity information (e.g., routes of exposure, toxicity);
- reactivity/compatibility data;
- special precautions and protective clothing required.

J. Manifest System

Whenever a shipment of hazardous waste is initiated from a facility or received at a facility the owner or operator of that facility must comply with the applicable sections of 22a-449(c)-100 - 110 of the Connecticut Hazardous Waste Management Regulations, and the requirements of 40 CFR Part 262, and the applicable sections of 40 CFR Part 264 Subpart E.

K. Operating Record

1. The Permittee must keep a written operating record at his facility.

2. The following information must be recorded, as it becomes available, and maintained in the operating record until closure of the permitted facility, in accordance with 40 CFR 264.73 or as specified herein:

a) A record of the wastes and other materials received into the permitted storage and management areas including the dates the materials were received, the quantities, and the dates the materials were removed from the permitted areas or tanks, where applicable.

b) The location of each hazardous waste and other materials within the permitted facility and the quantity at each location.

c) Records and/or results of waste analyses performed as specified in Specific Facility Condition (SFC) IV.A(15), IV.B(5), IV.C(3), V.C(3), and V.C(4); the Waste Analysis Plan; and 40 CFR Parts 268.4(a) and 268.7.

d) Summary reports and details of all incidents that require implementing the contingency plan as specified in SFC V.I(1)(j).

e) Records and results of inspections as required by SFC IV.A(7), IV.A(9), IV.A(10), IV.B(II)(9), and V.E(1); and the inspection schedule (Attachment E).

f) All closure cost estimates under Section 22a-449(c)-104 of the Regulations of the Connecticut State Agencies and 40 CFR 264.142.

g) A certification by the Permittee no less often than annually, i.e. - in accordance with the annual hazardous waste report, that the Permittee has a program in place to reduce the volume and toxicity of hazardous waste that he/she generates to the degree determined by the Permittee to be economically practicable; and the proposed method of treatment, storage or disposal is that practicable method currently available to the Permittee which minimizes the present and future threat to human health and the environment.

h) For the permitted storage facility, a copy of the notice and the certification and demonstration if applicable, required by the generator or the owner or operator pursuant to 40 CFR 268.7 and/or 268.8 prior to shipping any waste to an off-site permitted treatment, storage and/or disposal facility.

i) For the permitted storage facility, the information contained in the notice (except the manifest number), and the certification and demonstration if applicable, required by the generator or the owner or the operator pursuant to 40 CFR 268.7 and/or 268.8 prior to receiving any waste.

L. Availability, Retention, and Disposition of Records

1. All records, including plans, required under Section 22a-449(c) of the Regulations of the Connecticut State Agencies, and this permit must be furnished upon request, and made available at all reasonable times for inspection, by any officer, employee, or representative of CT DEP or EPA who is duly designated by the Commissioner or the Regional Administrator.

2. The retention period for all records required under, Section 22a-449(c) of the Regulations of the Connecticut State Agencies, and this permit is extended automatically during the course of any unresolved enforcement action regarding the Facility or as requested by the Commissioner of CT DEP or the Regional Administrator of EPA.

M. Annual Report

The Permittee must prepare and submit an annual report to the Commissioner of CT DEP by March 1 of each year on such forms as the Commissioner may direct.

N. Closure

1. The Permittee shall close the permitted facility in a manner that:

a) minimizes the need for further maintenance;

b) controls, minimizes, or eliminates, to the extent necessary to protect human health and the environment, post-closure escape of hazardous waste, hazardous constituents, leachate, contaminated run-off, or hazardous waste decomposition products to the ground or surface water or to the atmosphere; and

c) complies with the closure requirements of 22a-449(c)-104 of the Connecticut Hazardous Waste Management Regulations, 40 CFR 264.178, 40 CFR 264.197 and the closure plan incorporated herein as Attachment C.

2. A copy of the closure plan and all approved revisions to the closure plan shall be submitted to the Commissioner upon request and shall be kept at the facility until closure is completed and certified.

3. The Permittee may submit a written request to the Commissioner for a permit modification to amend the closure plan at any time prior to the notification of partial or final closure of the permitted facility. A copy of the proposed amended plan must be included with the request.

4. The Permittee shall submit a written notification of or request for a permit modification to authorize a change in operation plans, permitted facility design, or the approved closure plan in accordance with the applicable procedures in 22a-449(c)-100 - 110 of the Connecticut Hazardous Waste Management Regulations. The written notification or request must include a copy of the amended closure plan for review or approval by the Commissioner.

a) The Permittee may submit a written notification or request to the Commissioner for a permit modification to amend the closure plan at any time prior to the notification of partial or final closure of the permitted facility. A copy of the proposed amended plan must be included with the request.

b) The Permittee shall submit a written request to the Commissioner for a permit modification to authorize a change in the approved closure plan whenever:

i) Change in operating plans or permitted facility design affect the closure plan; or

ii) There is a change in the expected year of closure; or

iii) In conducting partial or final closure activities, unexpected events occur requiring a modification of the approved closure plan; or

iv) New or additional information becomes known which requires a modification of the approved closure plan.

A copy of the proposed amended plan must be included with the request.

5. The Permittee shall submit a written request of a permit modification to the Commissioner including a copy of the proposed amended closure plan for approval at least sixty (60) days prior to the proposed change in permitted facility design or operation, or no later than sixty (60) days after an unexpected event has occurred which has affected the closure plan. If an unexpected event occurs during the partial or final closure period, the Permittee shall request a permit modification no later than thirty (30) days after the unexpected event.

6. The Commissioner may request modifications to the plan under the conditions described in Section V.N(4). The Permittee shall submit the modified plan within sixty (60) days of the request by the Commissioner, or within 30 days if the change in permitted facility conditions occurs during partial or final closure.

7. The date when the Permittee "expects to begin closure" must be no later than thirty (30) days after the date on which any permitted hazardous waste management unit receives the known final volume of hazardous wastes or, if there is a reasonable possibility that the permitted hazardous waste management unit will receive additional hazardous wastes, no later than one year after the date on which the unit received the most recent volume of hazardous waste. The Permittee shall notify the Commissioner in writing at least 45 days prior to the date on which he expects to begin final closure of the permitted facility.

8. The Permittee shall complete the closure activities in accordance with the closure plan, incorporated herein as Attachment C within one hundred eighty (180) days after receiving the final volume of waste.

9. The Permittee shall properly dispose of or decontaminate all equipment and structures associated with hazardous waste and processing activities in accordance with the closure plan incorporated herein as

Attachment C and applicable requirements of 22a-449(c)-100 - 110 of the Connecticut Hazardous Waste Management Regulations.

10. Within sixty (60) days of the completion of final closure, the Permittee shall submit to the Commissioner certification both by the Permittee and by an independent registered professional engineer that the Facility has been closed in accordance with the specifications in the closure plan, included herein as Attachment C, and as may be modified herein.

11. The Permittee shall close the hazardous waste units of the permitted facility in accordance with the applicable sections of the permitted closure plan, included herein as Attachment C, and as may be modified herein.

O. Financial Responsibility

1. The Permittee shall have and maintain at the facility a written estimate in accordance with 40 CFR 264.142 of the cost of closing the permitted facility in accordance with the approved closure plan.

2. The Permittee shall adjust the closure cost estimates for inflation in accordance with procedures specified in 40 CFR 264.142(b). The adjustment shall be made by October 1 of each year. The latest adjusted cost estimate shall be kept at the facility, and a signed original shall be submitted to the Commissioner within fourteen (14) days of preparation.

3. The Permittee shall revise the closure cost estimates whenever a change in the approved closure plan increases the cost of closure. The revised closure cost estimate shall then be adjusted for inflation as specified in Section V.O(2) above.

4. The Permittee shall in accordance with 40 CFR 264.143 or 40 CFR 264.149, establish and continuously maintain financial assurance for closure of the permitted facility. Such financial assurance shall be maintained until the Commissioner notifies the Permittee in writing that he is no longer required to maintain financial assurance for closure of the permitted facility.

5. The wording of the financial assurance mechanism(s) secured for the purpose of compliance with Section V.O(4) above shall be identical to the wording specified in 40 CFR 264.151, except that all references to the "Regional Administrator of EPA" shall be changed to the "Commissioner of DEP".

6. The Permittee shall in accordance with 40 CFR 264.147(a) or 40 CFR 264.149 establish and continuously maintain liability coverage for sudden accidental occurrences at the facility. The liability coverage shall be in the amount of at least $1 million per occurrence with an annual aggregate of at least $2 million, exclusive of legal costs.

   The liability coverage shall be maintained until the certification of final closure required by Section V.N(11) is received by the Commissioner unless the Commissioner has reason to believe that closure has not been in accordance with the approved closure plan.

7. The wording of the liability insurance documentation submitted for the purposes of compliance with Section V.O(6) above shall be identical to the wording specified in 40 CFR 264.151, except that all references to the "Regional Administrator of EPA" shall be changed to the "Commissioner of DEP".

8. The Permittee shall comply with the requirements of 40 CFR 264.148 in the event of incapacity of the owner or operator, guarantors or financial institutions.

P. <u>Air Emission Standards for Process Vents</u>

1. The Permittee shall comply with the requirements of 40 CFR Part 264, Subpart AA -- Air Emission Standards for Process Vents, for all equipment regulated by the above referenced regulations and as regulated by this permit.

   The regulations in this subpart apply to owners and operators of facilities that treat, store, or dispose of hazardous wastes.

   a) Except for part 264.1034(d) and (e), this subpart applies to process vents associated with distillation, fractionation, thin-film evaporation, solvent extraction, or air or steam stripping operations that manage hazardous waste with organic concentrations of at least 10-ppmw, if these operations are conducted in:

      1) Units that are subject to the permitting requirements of part 270 of 40 CFR, or

      2) Hazardous waste recycling units that are located on hazardous waste management facilities otherwise subject to the permitting requirements of part 270 of 40 CFR.

2. Standards:

   a) The Permittee shall comply with the applicable requirements for:

      - Process vents (part 264.1032), and
      - Closed-vent systems and control devices (part 264.1033).

3. Each Permittee subject to the provisions of this subpart shall comply with the test methods and procedures requirements provided in 40 CFR 264.1034.

4. Each Permittee subject to the provisions of this subpart shall comply with the recordkeeping requirements of 40 CFR 264.1035.

5. A semiannual report shall be submitted by the Permittee subject to the requirements of 40 CFR 264.1036 to the Commissioner by dates specified by the Commissioner. The report shall include the information specified in 40 CFR 264.1036.

Q. Air Emission Standards for Equipment Leaks

1. The Permittee shall comply with the requirements of 40 CFR Part 264, Subpart BB -- Air Emission Standards for Equipment Leaks, for all equipment regulated by the above referenced regulations and as regulated by this permit.

   The regulations in this subpart apply to owners and operators of facilities that treat, store, or dispose of hazardous wastes.

   a) Except as provided in part 264. 1064(k), this subpart applies to equipment that contains or contacts hazardous wastes with organic concentrations of at least 10 percent by weight that are managed in:

      1) units that are subject to the permitting requirements of part 270 of 40 CFR, or

      2) hazardous waste recycling units that are located on hazardous waste management facilities otherwise subject to the permitting requirements of part 270.

   b) Each piece of equipment to which this subpart applies shall be marked in such a manner that it can be distinguished readily from other pieces of equipment.

   c) Equipment that is in vacuum service is excluded from the requirements of part 264.1052 to 264.1060 if it is identified as required in part 264.1064(g)(5).

2. Standards:

a) The Permittee shall comply with the applicable requirements for:

- o Pumps in light liquid service (part 264.1052);
- o Compressors (part 264.1053);
- o Pressure relief devices in gas/vapor service (part 264.1054);
- o Sampling connecting systems (part 264.1055);
- o Open-ended valves or lines (part 264.1056);
- o Valves in gas/vapor service or in light liquid service (part 264.1057);
- o Pumps and valves in heavy liquid service, pressure relief devices in light liquid or heavy liquid service, and flanges and other connections (part 264.1058);
- o Closed-vent systems and control devices (part 264.1060);
- o Delay of repair (part 264.1059);

b) Or, the permittee may elect to comply with the alternate standards as identified below providing the appropriate notification requirements have been met by the Permittee, to the satisfaction of the Commissioner:

- o Alternative standards for valves in gas/vapor service or in light liquid service: percentage of valves allowed to leak (part 264.1061);
- o Alternative standards for valves in gas/vapor service or in light liquid service: skip period leak detection and repair (part 264.1062)

3. Each Permittee subject to the provisions of this subpart shall comply with the test methods and procedures requirements provided in 40 CFR 264.1063.

4. Each Permittee subject to the provisions of this subpart shall comply with the recordkeeping requirements of 40 CFR 264.1064.

5. A semiannual report shall be submitted by the Permittee subject to the requirements of 40 CFR 264.1065 to the Commissioner by dates specified by the Commissioner. The report shall include the information specified in 40 CFR 264.1065.

R. <u>Applicable Laws</u>

1. The Permittee shall comply with all applicable Federal, State, and Local laws.

Permit No. CTD990672081

Attachment A

Waste Analysis Plan

1. Waste Characterization
2. Waste Verification
3. Characterization of Spills
4. Compatibility Testing
5. Degree of Hazard Determination
6. Other Materials Requirements

Appendix A-1 - Compatibility Testing

Appendix A-2 - Degree of Hazard Determinations

ATTACHMENT A

WASTE ANALYSIS PLAN

1) Waste Characterization

A) Before the Permittee treats or stores hazardous waste received from off-site or generated on-site, the Permittee shall obtain a detailed chemical and physical characterization of a representative sample of the waste. At a minimum, this analysis shall contain all the information which must be known to treat, store, or dispose of the waste in accordance with 40 CFR Parts 261, 264, 266, and 268 and the conditions of this permit.

B) Waste characterization for wastes received from off-site and for wastes generated on-site and other materials co-stored with the hazardous waste shall be conducted:

i) for the first time characterization of waste streams received from off-site and generated on-site,

ii) when the Permittee is notified, or has reason to believe, that the process or operation generating the hazardous waste has changed,

iii) when the Permittee suspects that the characteristics of the waste have changed,

iv) when the waste does not conform to the description on the generator Internal Waste Manifest Form,

v) annual recharacterization of both off-site wastes and wastes generated on-site.

C) All wastes received and generated at the facility shall be characterized at a minimum, as specified in Section 1.D below through manufacturer's information, process information, and/or laboratory analysis as described below.

i) Manufacturer Information

First hand data obtained from manufacturers pertaining to raw materials, products, or similar materials may be used when appropriate. This shall include, but is not limited to, material specifications and material safety data sheets (MSDS's) such that this data supports and documents the information required by the specified characterization parameters.

ii) Process Information

First hand knowledge of the process generating the waste may be used when appropriate. This includes published or documented data on the hazardous waste generating process or on information documenting the generation of hazardous waste by similar processes. This data shall support and document the information required by the specified characterization parameters.

iii) Laboratory Analysis

If wastes cannot be properly or fully characterized through manufacturer information or process information as described above, then appropriate sampling and analytical procedures shall be conducted by qualified trained personnel in accordance with the methods and requirements in EPA Publication SW-846 (latest edition) or other EPA approved methods.

D) Characterization Parameters.

WASTE CATEGORY	CHARACTERIZATION PARAMETERS
Acids; Alkalies; Cyanides; Chromium; F006 Sludge and Debris; and Inorganic Solids	Physical Description Chemical composition Compatibility determination[1] Degree of Hazard[2] pH TCLP Metals and Organics[3] Total Solids Paint Filter Test[4] Reactivity[5] Applicable land ban disposal treatment standards[6]
Organic Solvents, Oils, Organic Solids, and Paint Wastes	Physical Description Chemical composition Compatibility determination[1] Degree of Hazard[2] Flash Point[7] TCLP Metals and Organics[3]

WASTE CATEGORY[1]	CHARACTERIZATION PARAMETERS
Organic Solvents, Oils, Organic Solids, and Paint Wastes (Con't)	BTU Value(must be >5,000 BTU/LB)[8] Total Solids Halogenated Organic Compounds[8] Halogen Content (Total Halogens)[8] PCB[9] Paint Filter Test[10] Total Petroleum Hydrocarbons[11] Applicable land ban disposal treatment standards[6]
Laboratory Chemicals and Commercial Chemical Products	Physical Description Chemical Composition Compatibility determination[1] Degree of Hazard[2] Subpart C Characteristics[12] Ignitability Corrosivity Reactivity Toxicity Characteristics Applicable land ban disposal treatment standards[6]

Notes: [1] See Section 4, Compatibility Testing and Appendix A-1 of this Waste Analysis Plan.

[2] See Section 5, Degrees of Hazard Determination and Appendix A-2 of this Waste Analysis Plan.

[3] TCLP Herbicides and Pesticides will be analyzed only when such contamination is suspected. Acids only are not required to be analyzed for volatiles unless such contamination is suspected.

[4] For F006 Sludge and Debris and Inorganic Solids only.

[5] For Cyanides only.

[6] Treatment Standard as defined in 40 CFR Subpart 268.

[7] Wastes that are solid may be shown not to meet the characteristic of ignitability in accordance with Section 261.21 of 40 CFR.

[8] For Waste Fuels only.

[9] For Oils only.

[10] For Organic Solids and Paint Wastes only.

[11] For Organic Solids only.

[12] As necessary.

E) Records of all characterizations/analyses required in this section must be retained in the facility operating record until closure of the permitted facility.

F) Analytical methods and other appropriate methods shall be used to conduct the analyses specified in Sections 1 and 2 of this attachment. Methods approved for use include those specified in "Test Methods for Evaluation of Solid Waste; Physical/Chemical Methods", EPA Publication SW-846 (September, 1986 or as revised); methods approved in the codification of 40 CFR Part 260.11; methods prescribed by ASTM; or other US EPA approved methods.

i) The following are additional analytical methods allowed by this permit:

Parameter	Source/Method
Total Solids (% solids)	SM/Method 209A
Total Halogens	ASTM/D808-81
Total Petroleum Hydrocarbons	SM/Method 418.1
BTU Content	ASTM/D240-64 or D-2382

Sources:

SM - "Standard Methods for the Examination of Water and Wastewater"; (16th edition or as revised); APHA/AWWA/WPCF.

ASTM - "Annual Book of ASTM Standards, Part 17, Petroleum Products"; ASTM; (1970).

G) Unless otherwise indicated, sampling methods are as described in:
Test Methods for Evaluation of Solid Waste, Physical/Chemical Methods
EPA publication SW-846
Office of Solid Waste
Washington, D.C. 20460
(September, 1986) or as revised.

Sampling Methods

WASTE TYPE	SAMPLING DEVICE
Extremely viscous liquids	ASTM Standard D140-70
Crushed or powdered material	ASTM Standard D346-75
Soil or rock-like material	ASTM Standard D1452-65
Fly Ash-like material	ASTM Standard D2234-76

2) Waste Verification (Evaluation/Spot Testing)

A) In addition to initial waste characterization, waste verification (as outlined in Table WA-1) will be employed as a secondary check of waste identity for the following waste streams:

i) All waste chemicals and other materials received from off-site and generated on-site which are treated, stored or otherwise managed in the hazardous waste storage and management area(s)/units(s). Waste verification for waste chemicals and other materials received from off-site shall be done by spot testing, whereas waste verification for waste chemicals and other materials generated on site shall be done by evaluation

ii) Each waste stream, received from off-site or generated on-site which does not have the characterization and/or verification parameters defined as indicated in Sections 1.D and 2 shall not be accepted, stored or otherwise managed in any of the permitted hazardous waste management areas.

B) Prior to the transfer or bulking of a waste stream into a storage tank or container, the Permittee shall evaluate the waste in the receiving storage tank, container or other processing unit/area, in accordance with Section 2 of this Waste Analysis Plan (WAP) to confirm that the contents of the storage tank, container or other processing unit/area are as indicated and that the materials are compatible, in accordance with Section 4 of this WAP.

Table WA-1

WASTE VERIFICATION
(EVALUATION/SPOT TESTS)

WASTE STREAM	WASTE VERIFICATION PARAMETER[1]
Acidic, Alkaline, Cyanide, and Chromium Solutions	Chemical Names (Hazardous waste constituents) Compatability Determination pH
Organic Solvents, Oils (B-2 and B-3), Organic Solids, and Paint Wastes	Chemical Names (Hazardous waste constituents) Compatability Determination Total Volatile Organics PCBs[2] Flash Point[3]

NOTES:

[1] All screening tests are performed with field test kits such as those manufactured by Hach Chemical Company, except for Total Volatile Organics which will be measured with a portable screening unit. The test methods specified in this Waste Analysis Plan do not apply to these verification tests.

[2] For Oils (B-2 and B-3) if either no analytical results are received with each container of waste and/or the analytical results are not for the exact waste received.

[3] Wastes that are solid may be shown not to meet the characteristic of ignitability in accordance with Section 261.21 of 40 CFR.

C) Wastes received from off-site shall be representatively sampled (See IV.5 of the permit) and must be evaluated/spot tested in accordance with Section 2 above or recharacterized in accordance with Sections 1.C and 1.D within 72 hours of receipt to a staging area and either accepted or rejected.

3) Characterization of Spills

A) Spill residues from known sources shall be evaluated/analyzed for the appropriate parameters outlined in Sections 1.C and 1.D. The results from these evaluations/analyses shall be used to characterize the spill residues.

B) Spill residues from unknown sources must be evaluated/analyzed for all the parameters listed in Section 1.D.

4) Compatibility Testing

A) Hazardous wastes or other materials co-stored must be fully categorized and verified in accordance with Sections 1 and 2 of this waste analysis plan. Hazardous waste or other materials already characterized do not need to be re-characterized unless the conditions stated in Paragraph 1.B(ii) through (v) of this plan have occurred.

B) Using, at a minimum, the procedures outlined in 40 CFR 264 Appendix V, and the procedures specified in section 4.D below, the Permittee must determine the compatibility of each waste with each other waste or other material with which it may be treated, stored or managed.

C) A waste is considered incompatible with another waste or other material, if, upon mixing or contact, a reaction may occur which:

i) generates excessive heat or pressure, fire or explosion, or violent reactions;

ii) produces toxic mists, fumes, dusts, or gasses in sufficient quantities to threaten human health or the environment:

iii) produces flammable fumes or gases in sufficient quantities to pose a risk of fire or explosion;

iv) damages the structural integrity in its container, containment structure, or any other structure or equipment required by this permit; or

v) through other like means, threatens human health or the environment.

D) The Permittee shall assess the incompatibility of wastes and other materials as follows:

i) For each waste stream to be accepted from off-site or generated on-site which is to be treated, stored or otherwise managed at the permitted facility, assign a Reactivity Group Number (RGN) to each chemical constituent present in the waste stream in accordance with the compatibility determination and testing requirements as contained in Appendix A-1, included herein. NOTE: When it is known by Material knowledge, Manufacturer Information, Process knowledge, and/or Evaluation/Laboratory Analysis that a material does not exhibit the reactivity

associated with a particular RGN for the given waste, that RGN will not apply to the waste, however, the supporting documentation must be maintained in the facility operating record until closure of the facility.

ii) Using Appendix A-1, 40 CFR Part 264 (Appendix V), and knowledge of the presence of specific components and their Reactivity Group Numbers, and considering the concentration of the components, their physical state, the medium in which they exist, the presence of other components, and other relevant factors, including those listed in paragraphs 4.A), B), and C), above, compare all the likely reactivity group numbers for a waste stream or other material with the reactivity group numbers allowed in a storage or management group. Then select a compatible storage or management group, and designate the proper storage or management location within the permitted hazardous waste management areas.

iii) Any two wastes or materials which yield reactivity group number pairs indicating an incompatible reaction, shall be considered incompatible, unless actual documented compatibility tests demonstrate that the wastes in question are, in fact, compatible.

iv) For wastes or other materials which Figure No. 1, indicates an incompatibility problem, laboratory tests may be performed to further assess the actual incompatibility of the materials. The tests which may be performed shall be as identified in Appendix A-1.

If the compatibility tests do not result in an incompatible reaction as defined in section 4.C above, and having demonstrated compliance with 40 CFR Part 264.13 and 264.17 the Permittee may, at the Permittees discretion consider the substances compatible.

If an incompatible reaction is observed, as defined in section 4.C above, the materials shall be considered incompatible.

v) Laboratory results and observations used to confirm findings in compatibility determinations shall be retained in the operating record until closure of the permitted facility for any waste or other materials tested in the referenced manner.

5) <u>Degree of Hazard Determination</u>

Prior to placing into storage hazardous wastes or other materials, the Permittee shall determine the degree of hazard for each hazardous waste or other material to be stored in the permitted hazardous waste storage area.

The degree of hazard for each hazardous waste and other material shall be determined as follows:

A) Obtain the applicable degree of hazard and/or hazard class rating for each material, as may be identified in NFPA 704 as revised, Appendix A-2 and NFPA 325M, NFPA 49, NFPA 43A, NFPA 43B, NFPA 43C and other applicable NFPA standards herein incorporated by reference.

For mixtures containing two or more chemicals:

1) The degrees of hazard for each chemical constituent must be obtained. The mixture is then assigned the degrees of hazard which represent the most severe degrees of hazard associated with any of the chemical constituents within the mixture.

When a chemical constituent does not have a degree of hazard rating the Permittee must assign one using the NFPA 704 quantitative or qualitative determination, and must clearly document this evaluation/analysis (Note: the NFPA 704 criteria for qualitative information shall be deemed appropriate when quantitative information is unavailable or inadequate), or

2) The degrees of hazard for the entire mixture may be assigned provided the Permittee can determine and document the principal hazards of the mixture. The method to be used to provide the degrees of hazard for the mixture shall be as outlined in NFPA 704 (e.g., the quantitative or qualitative method, where qualitative information shall be deemed appropriate when quantitative information is unavailable or inadequate).

B) All information used to make the determination must be clearly documented and maintained in the operating record until closure of the permitted facility.

6) <u>Other Materials Requirements</u>

A) Before the Permittee stores or manages any other materials, he/she shall obtain a detailed chemical and physical characterization of the other material. At a minimum, this characterization shall contain all the information which must be known to store, or manage the other material in accordance with the terms and conditions of this permit.

The Permittee shall conduct the other material characterizations in accordance with 1.B and 1.C, above. Documentation of all other

material characterization shall be retained in the operating record until closure of the permitted facility.

B) In addition to Sections 1.B and 1.C above, the Permittee shall also verify the following Characterization Parameters

i) Chemical name/Primary chemical Constituents;

ii) Compatibility Determination (see Section 4); and

iii) Degree of Hazard Determination (see Section 5).

APPENDIX A-1

COMPATIBILITY TESTING

III. COMPATIBILITY TESTING

A. EXISTING WASTE STREAMS

Compatibility evaluations of waste materials is necessary to insure proper management of wastes. Commingling of incompatible waste materials can result in undesired and dangerous reactions. To evaluate the potential for such undesired reactions, the existing waste streams at the Pratt & Whitney East Hartford facility have been reviewed for compatibility. The guidance material utilized for the evaluations performed was an EPA document entitled "A Method for Determining the Compatibility of Hazardous Wastes", EPA/600/14, April, 1989. This EPA document presents a methodology for binary evaluations of waste materials based on "reactivity group numbers" (RGNs) which are assigned to waste materials utilizing various tables within the guidance.

The consequences of commingling of incompatible materials have been categorized into twelve basic classes in the EPA guidance document. These classes are; 1) heat generation, 2) fire, 3) gas formation, 4) formation of toxic fumes, 5) generation of flammable gases, 6) volatilization of toxic or flammable substances, 7) formation of substances of greater toxicity, 8) production of shock and friction-sensitive compounds, 9) pressurization in closed vessels, 10) solubilization of toxic substances, 11) dispersal of toxic dusts, mists, and particles and 12) violent polymerization. These potential

reactions encompass the range of reactions which could be anticipated for the waste materials managed at P&W and have therefore been utilized in the compatibility evaluations. The single exception is reaction #10, solubilization of toxic substances, which has not been considered an incompatible reaction. The justification for this is described in further detail in subsequent portions of this compatibility evaluation.

The methodology presented in the EPA document has several important limitations. The guidance was developed on the assumption that waste interactions are due to the reactions produced by pure chemicals in the wastes. A further assumption was that the chemicals react at ambient temperature and pressure and that the reactivities are uninfluenced by concentration, synergistic and/or antagonistic effects. Thus, unless virtually pure materials are mixed, the reactions anticipated by the EPA document may not occur as predicted. Lastly and perhaps most important is the fact that the guidance only performs binary comparisons of materials. That is, only two RGNs can be evaluated at one time. Thus, if a ternary or quarternary combination of RGNs results in an incompatibility, it will not be reflected in the methodology presented in the guidance. However, evaluations have been conducted in accordance with the guidance to estimate potential adverse reactions.

The first step in the waste compatibility determinations was to assign RGNs to the waste materials managed at the facility. The master list of waste materials handled at the facility is presented as

Table 1. This list contains both RCRA hazardous and RCRA nonhazardous waste materials as well as the P&W facility where the waste was generated. Each waste stream has been given a P&W waste identification number at its point of generation. It is infrequent that mixing of process waste streams occurs. However, when and if it should occur, the RGNs assigned are based on the characteristics of the materials and knowledge of the process streams.

The basic information sources utilized in the assignment of RGNs were the process solution (PS) descriptions, the MSDS sheets for raw materials from which waste were derived, any available waste specific knowledge contained in documented form, and waste characterization analysis data. The waste analysis plan includes additional information regarding screening and acceptance of off-site wastes.

It should be noted that several RGNs can be assigned to any particular waste based on the actual constituent makeup of the waste. Further, there will be some materials which have no RGNs assigned to them. This set of materials will be primarily occupied by lab pack wastes. Since each lab pack contains a unique set of waste materials, RGNs can only be assigned upon creation of the lab pack itself. Once RGNs have been assigned to the lab packs they will be handled as described in Section B, "Future Waste Streams".

In addition to constituent descriptions and RGN assignments, all P&W waste (on-site & off-site) have been broken down into generic groupings, i.e., acids, alkalies, etc., per the request of the regulatory agencies. The compatibility of waste materials will

therefore be based on the EPA Guidance as presented with this document.

Once the RGNs have been assigned to each existing waste material it is then necessary to compare each RGN of each waste to each RGN of every other waste which may be stored together to determine if any incompatibilities exist. The determination of compatibility was based on a compatibility matrix contained in the EPA guidance. A reproduction of the matrix is presented as Figure 1. If incompatibilities exist the waste materials are then considered exclusive and they cannot be stored within the same storage area nor can they be mixed within a common tank. The exceptions to this would be in cases of standard and authorized overrides whereby wastes in question have been found to be compatible by way of compatibility testing performed in a laboratory. These exceptions will be explained in further detail in a subsequent portion of this document.

It is apparent that a significant number of comparisons are necessary to evaluate all of the waste materials managed at P&W. To facilitate this task in a manageable manner a computer program was written to perform the comparisons. The compatibility matrix was input into the program as a "truth table" for comparisons and each waste was compared with each other. These comparisons were iterated until all waste materials had been reviewed and placed into a distinct category in which all contributing wastes are compatible. The information obtained through the output of the computer program was

utilized by P&W to assist in determining the number and type of tanks required to manage the numerous bulk waste streams generated. The source code used was simply one program developed to perform the evaluations and produce output. P&W is currently developing a source code designed to evaluate a waste stream's compatibility with RGNs assigned to each tank. Essentially this source code will track tank content's RGNs. When a new waste is to be added to a tank, a comparison will be made using the source code to determine whether compatibility exists. The source code will evaluate the new waste stream on a pass-fail basis. It should be noted that the source code may be modified for several reasons such as to minimize the time required to obtain the result of the evaluation. However, the essential part of the source code is the compatibility matrix or "truth table" contained within the code.

There will be situations where some waste materials cannot be assigned RGNs. This could result from a waste stream that is extremely variable and needs evaluation each time it is generated. In such a situation the waste material will be analytically tested for compatibility as described subsequently each time it is generated prior to its insertion into a bulk tank. In the case of a containerized waste, it will simply be stored in its own segregated storage area.

It should be noted that one alteration has been made to the EPA compatibility matrix or "truth table" used in the source code. This

alteration consisted of removing the incompatibility designation for materials that are soluble in another material. The EPA guidance includes solubilization as an incompatibility because of the potential to transport the solubilized constituents into the environment. Thus, there is no physical incompatibility for materials that fall within this incompatibility designation. Since storage of waste materials will occur at P&W and these activities will occur within approved storage units the possibility for release to the environment is negligible. Therefore since an actual incompatibility does not exist, it was eliminated from consideration in the evaluations performed. Some waste materials contain constituents which according to the guidance makes the waste "self- incompatible". A typical example of a self-incompatibility would be an acid waste material which has previously been mixed with water to arrive at a desired concentration for production use. When assigning RGNs to such a material once it becomes a waste, both an acid RGN would be assigned as well as water RGN.

Since a water RGN and an acid RGN are incompatible utilizing the guidance matrix, the material is then "self-incompatible". The program utilized will contain a subroutine to flag self-incompatible waste streams. Self-incompatibles will be assessed by the master system for incompatible interactions and all incompatible wastes will be red-flagged.

B. FUTURE WASTE STREAMS

It is important to consider the fact that new materials will be managed over time as new processes and/or new raw materials are incorporated into the business activities at P&W. Therefore, a procedure must be available to accommodate new materials entering the waste stream. Similarly, over time some waste materials will drop out of the overall waste stream due to obsolescence of the process or material. However, no procedure is required for materials which drop out of the waste inventory since this action will not influence the waste compatibility source code or management.

In the case of a new waste type, the same basic procedure will be utilized as was utilized in the initial structuring of this overall evaluation. That is, the waste will be assigned appropriate RGNs based on process solution descriptions, MSDS sheet information, any additional chemical specific information documented on the waste, and waste characterization analysis data. If, after assigning RGNs to the new waste material, there isn't a tank or container area which can accommodate all of the assigned RGNs, the source code will be used to establish categories which will accommodate all RGNs. Here again, the only exception to this will be in the case of laboratory testing performed to demonstrate compatibility with all waste RGNs within the tank or container storage area. It is presumed here that a new waste type will fall into an existing EPA waste code already authorized on the Part A application. If any new waste type is not already authorized within the Part A, then a permit modification will be initiated prior to managing the waste.

In addition to new waste materials entering the waste inventory, there will be situations where RGNs were either incorrectly assigned or where, although a waste material has been assigned an RGN due to a particular constituent is too low to actually impart the characteristics of the assigned RGN. Further, since the majority of assigned RGNs originated from raw materials information there will also be cases where a particular constituent or property is consumed or eliminated through process use. In such situations it may be desired to adjust the initial assigned RGN to one that more appropriately reflects the actual constituents or properties of the waste.

To accommodate such situations, P&W will apply their specific knowledge of a waste material or results of analytical testing when reviewing/revising RGNs. P&W will document in the operating log any revisions of RGNs with justification. Any waste material that has had an assigned RGN modified through this procedure will then be treated as a "new" waste and the category assignment procedure described in this section shall apply.

C. LABORATORY TESTING FOR COMPATIBILITY

As indicated above it is necessary to have the ability to deviate from the compatibility matrix as presented in the EPA guidance document when valid compatibility testing is performed. This is necessary due to the limitations of the EPA guidance and due to the chemical specific nature of any particular waste type which may or may not be addressed in the guidance. The most limiting aspect of the guidance is the fact that only binary combinations of constituents is addressed and, in virtually every case, the potential for reactions beyond the binary combinations exists.

It is apparent that attempting to evaluate one waste against all potential combinations of wastes within a category is impossible. Therefore, a manageable system must be established that insures a reliable, safe evaluation to occur utilizing existing wastes. To accomplish this goal the focus will be on bulk liquids.

Testing to evaluate waste compatibility will occur on an as needed basis at P&W. Screening will be done to provide some foreknowledge for subsequent physical testing of the two waste materials. Screening will consist of testing each waste for pH, separate phase materials, specific gravity, flashpoint, cyanide, TVO and evaluation of the chemical name of the primary constituents. Not all screening tests will be utilized on every waste material depending on the specific nature of the waste. P&W will apply their knowledge of the waste to determine the appropriate set of screening test. For instance an aqueous waste such as an acid solution will generally not

have a flashpoint determination conducted due to the known lack of combustible materials within the waste. In all cases where a specific screening test is eliminated, P&W will document such elimination and the justification in the operating log.

The results of the screening will be reviewed to determine if the potential for any extreme reactions is possible. If extreme reactions are anticipated based on the screening testing, then the two wastes will no longer be considered for compatability evaluation.

If on the other hand a review of the screening does not indicate the potential for extreme reactions, commingling of the waste will be allowed provided that the IWTS compatibility issues have been addressed and co-storage is authorized.

For any waste stream to enter a storage area or bulk storage tank, all apparent "incompatibilities" flagged by the industrial waste tracking system must be addressed before storage. To allow co-storage of wastes flagged as apparently "incompatible" by the IWTS, each waste stream must be shown through actual documented laboratory testing that it is compatible with each of the RGNs which exist in the specified storage area or bulk tank. In other words, the EPA document will be strictly adhered to under all circumstances except in those situations where actual documented compatibility testing does not support the "incompatibilities" described by the EPA reference document.

Compatibility testing for a given waste stream will occur as follows:

1. Obtain 1 liter of representative sample from the waste in question. The waste sample collected shall be representative of the entire waste volume and shall be collected utilizing precleaned, dedicated sampling equipment.

2. Place 20 ml of the specific reference standard into a 50 ml beaker.

3. While mixing, add a 20 ml aliquot of the waste sample to the beaker. Be sure to add the waste dropwise initially, to reduce hazards associated with extremely violent reactions.

4. Note any signs of violent reactions, fuming, misting, gas production, excessive heat, or other reactions. Continue monitoring for 10 minutes afterward while continuing mixing.

5. The waste will be deemed incompatible with the RGN whenever:

   a. extreme fumes, gas, or reactions are produced.
   b. the mixing is sufficiently exothermic as to result in a mixture which is hot to the touch.

   If no evidence of incompatibility is noted within the 10 minute observation period, the testing will continue to Step 6.

6. Place 750 ml of the specific reference standard into a 1 liter beaker.

7. While mixing, add a 750 ml aliquot of the waste sample to the beaker. Be sure to add the waste dropwise initially, to reduce hazards associated with extremely violent reactions.

8. Note any signs of violent reactions, fuming, misting, gas production, excessive heat, or other reactions. Continue monitoring for 10 minutes afterward while continuing mixing.

9. The waste will be deemed incompatible with the RGN whenever:

   a. extreme fumes, gas, or reactions are produced.
   b. the mixing is sufficiently exothermic as to result in a mixture which is hot to the touch.

If the results of the screening test and the physical tests do not indicate incompatible materials, the wastes will be considered as compatible and commingling if the waste types will be authorized by override. Conversely, if evidence of extreme reaction is noted, the materials will be considered incompatible and shall not be commingled. In accordance with 40 CFR 264.17 the results of all testing and observations will be documented and recorded in the operating log of the facility.

As authorized under 40 CFR 264,17, "the results of the treatment (or storage) of similar wastes by similar treatment (or storage) processes and under similar operating conditions" is an acceptable criteria on which to base the mixing of incompatible wastes materials. In the event that Pratt & Whitney desires to place a waste material in with an "incompatible" material (based on RGN compatibilities), Pratt & Whitney will document in the operating log the justification for such action.

This documentation will largely consist of several items as follows: (1) Pratt & Whitney personnel specific knowledge of the waste materials involved given Pratt & Whitney's long history of handling such wastes, (2) Pratt & Whitney documented bench screening of the waste materials involved, or (3) engineered control on waste management structures which will prevent adverse reaction.

As mentioned in the laboratory testing section of this document, all bench tests conducted will have their results recorded in the operating log. The operating log then becomes a repository for reference in the event mixing of the same RGN incompatibles should occur in the future. Therefore, the operating log will be utilized to justify mixing of the RGN incompatible materials when previous bench testing has demonstrated acceptability.

Finally, the design of the "new" waste storage tanks has engineered controls to prevent particular adverse reaction denoted in the EPA Guidance Document. The tanks have been designed to control the evolution of heat during the mixing of waste materials. Therefore, in those cases where heat generation is the only adverse reaction anticipated by the Guidance, the designed controls will mitigate the effects of heat generation by controlling it and thus make the mixing of such materials acceptable.

FIGURE NO. 1

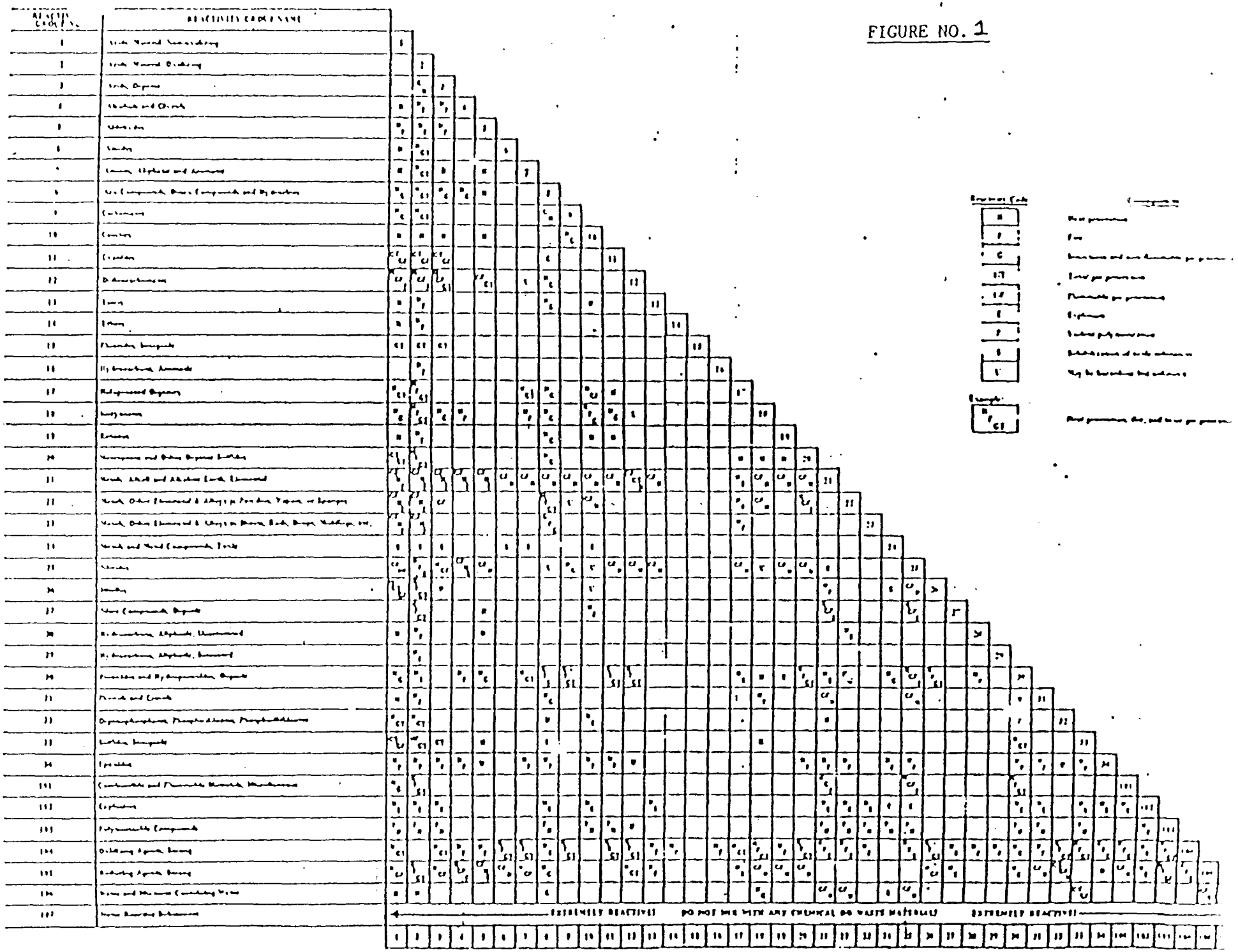
REACTIVITY GROUP NAME
EXTREMELY REACTIVE
DO NOT MIX WITH ANY CHEMICAL OR WASTE MATERIALS
EXTREMELY REACTIVE

APPENDIX A-2

DEGREES OF HAZARD DETERMINATION

Copyright © 1990 NFPA, All Rights Reserved

NFPA 704

Standard System for the

Identification of the Fire Hazards of Materials

1990 Edition

This edition of NFPA 704, *Standard System for the Identification of the Fire Hazards of Materials*, was prepared by the Technical Committee on Fire Hazards of Materials, and acted on by the National Fire Protection Association, Inc. at its Fall Meeting held November 13-15, 1989 in Seattle, WA. It was issued by the Standards Council on January 12, 1990, with an effective date of February 5, 1990, and supersedes all previous editions.

The 1990 edition of this document has been approved by the American National Standards Institute.

Changes other than editorial are indicated by a vertical rule in the margin of the pages on which they appear. These lines are included as an aid to the user in identifying changes from the previous edition.

Origin and Development of NFPA 704

Work on this standard originated in 1957 with a great deal of the development work having been done by the NFPA Sectional Committee on Classification, Labeling and Properties of Flammable Liquids starting in 1952. Background data was published by the Association in its Quarterly magazine in July 1954, 1956, and 1958. The material in its present form was first Tentatively Adopted in 1960. Official Adoption was secured in 1961 and revisions adopted in 1964, 1966, 1969, 1975, 1980, and 1985. In 1987, the Committee on Fire Hazards of Materials began a major effort to develop quantitative guidelines for assigning the Health Hazard and Reactivity Hazard Ratings. This 1990 edition contains these new guidelines and amended definitions for the Hazard Ratings.

Technical Committee on Fire Hazards of Materials

Donald P. Yuellig, *Chairman*
Cincinnati, OH
(Rep. FMANA)

A. Richard Allbrecht, Dow Chemical Co.
Rep. API
William H. Barlen, Compressed Gas Assn. Inc.
Richard G. Gann, National Bureau of Standards
Mark I. Grossman, Reliance National Risk Specialists
Harry H. McIntyre, Harry McIntyre Associates

Jennifer L. Nelson, AT & T Co.
Rep IFP Section
John M. Poulson, Union Carbide Corp.
Rep. CMA
Robert W. VanDolah, Pittsburgh, PA

Robert P. Benedetti, NFPA Staff Liaison

This list represents the membership at the time the Committee was balloted on the text of this edition. Since that time, changes in the membership may have occurred.

NOTE: Membership on a Committee shall not in and of itself constitute an endorsement of the Association of any document developed by the Committee on which the member serves.

Contents

Foreword 704– 5

Chapter 1 General 704– 5
1-1 Scope 704– 5
1-2 Applicability 704– 5
1-3 Purpose 704– 5
1-4 Description 704– 5
1-5 Assignment of Ratings 704– 5

Chapter 2 Health Hazards 704– 6
2-1 General 704– 6
2-2 Definitions 704– 6
2-3 Degrees of Hazard 704– 6

Chapter 3 Flammability Hazards 704– 7
3-1 General 704– 7
3-2 Degrees of Hazard 704– 7

Chapter 4 Reactivity (Instability) Hazards 704– 8
4-1 General 704– 8
4-2 Definitions 704– 8
4-3 Degrees of Hazard 704– 9

Chapter 5 Special Hazards 704– 9
5-1 General 704– 9
5-2 Symbols 704– 9

Chapter 6 Identification of Materials by Hazard Signal System 704– 9

Appendix A 704–11

Appendix B 704–12

Appendix C 704–13

Appendix D 704–14

Appendix E Referenced Publications 704–14

Index 704–15

NFPA 704

Standard System for the

Identification of the Fire Hazards of Materials

1990 Edition

Information on referenced publications can be found in Appendix E.

Foreword

The Committee on Fire Hazards of Materials has been working on the material in this standard since early 1957. A great deal of preliminary work was developed as a manual by the Sectional Committee on Classification, Labeling and Properties of Flammable Liquids of the NFPA Committee on Flammable Liquids starting in 1952. Progress reports were given on this activity at NFPA Annual Meetings and reported in the NFPA *Quarterly* in July issues of 1954, 1956, and 1958. The material was tentatively adopted as a guide in 1960, adopted in 1961, and further amended in 1964, 1966, 1969, 1975, and 1980.

As originally conceived, the purpose of the standard is to safeguard the lives of those individuals who may be concerned with fires occurring in an industrial plant or storage location where the fire hazards of materials may not be readily apparent.

Chapter 1 General

1-1 Scope.

1-1.1 This standard shall address the health, flammability, reactivity, and related hazards that may be presented by short-term, acute exposure to a material during handling under conditions of fire, spill, or similar emergencies.

1-1.2 This standard provides a simple, readily recognized, easily understood system of markings that provides a general idea of the hazards of a material and the severity of these hazards as they relate to handling, fire prevention, exposure, and control. The objectives of the system are:

(a) to provide an appropriate signal or alert and on-the-spot information to safeguard the lives of both public and private emergency response personnel;

(b) to assist in planning for effective fire and emergency control operations, including clean-up;

(c) to assist all designated personnel, engineers, plant and safety personnel in evaluating hazards;

1-1.3 It is recognized that local conditions will have a bearing on evaluation of hazards; therefore, discussion must be kept in general terms.

1-2 Applicability.

1-2.1 This standard is applicable to industrial, commercial, and institutional facilities that manufacture, process, use, or store hazardous materials.

1-2.2 This standard is not applicable to transportation or to use by the general public.

1-2.3 This standard is not applicable to chronic exposure or to nonemergency occupational exposure.

1-3 Purpose. This system is intended to provide basic information to fire fighting, emergency, and other personnel, enabling them to more easily decide whether to evacuate the area or to commence emergency control procedures. It is also intended to provide them with information to assist in selecting fire fighting tactics and emergency procedures.

1-4 Description.

1-4.1 This system identifies the hazards of a material in terms of three principal categories: "health," "flammability," and "reactivity." It indicates the degree of severity by a numerical rating that ranges from four (4), indicating severe hazard, to zero (0), indicating no hazard.

1-4.2 The information is presented by a spatial arrangement of numerical ratings with the health rating always at the nine o'clock position; the flammability rating always at the twelve o'clock position; and the reactivity rating always at the three o'clock position. Each rating is located in a square-on-point field, each of which is assigned a color: blue for health hazard; red for flammability hazard; yellow for reactivity hazard. Alternately, the square-on-point field may be any convenient contrasting color and the numbers themselves may be colored. See pages 9-10 for examples of the spatial arrangements.

1-4.3 The fourth space, at the six o'clock position, is reserved for indicating any unusual reactivity with water. The standard symbol for indicating unusual reactivity with water is the letter "W" with a line through the center: ~~W~~. No special color is associated with this symbol.

1-4.3.1 This space may also be used to indicate other unusual hazards, but only if not needed to indicate reactivity with water. Approved symbols will be designated in Chapter 5 of this standard.

1-5 Assignment of Ratings.

1-5.1 While the system is basically simple in application, the hazard evaluation required to determine the correct numerical ratings for a specific material shall be performed by persons who are technically competent and experienced in the interpretation of the hazard criteria set forth in this Standard. Assignment of ratings shall be based on factors that encompass a knowledge of the inherent hazards of the material, including the extent of change in behavior to be anticipated under conditions of exposure to fire or fire control procedures. (For additional information, see NFPA 49, *Hazardous Chemicals Data*, and NFPA 325M, *Fire Hazard Properties of Flammable Liquids, Gases, and Volatile Solids*.)

1-5.2 The system is based on relative rather than absolute [illegible]s. Therefore, it is anticipated that conditions of storage and use may result in different ratings being assigned to the same material by different persons. Furthermore, the guidance presented in the following chapters is necessarily limited. For example, flash point is the primary criterion for assigning the flammability rating, but other criteria may be of equal importance. For example, autoignition temperature, flammability limits, and susceptibility of a container to failure due to fire exposure also must be considered. For reactivity, emphasis has been placed on the ease by which an energy-releasing reaction is triggered. For health, consideration is given not only to inherent hazard but also to protective measures that must be taken to minimize effects of short-term exposure.

1-5.3 In some situations, such as warehouses, storage rooms or buildings, laboratory facilities, etc., a variety of materials may be present in one localized area. In such cases considerable judgement may be needed to properly assign ratings to the area.

Chapter 2 Health Hazards

2-1 General.

2-1.1 This chapter shall address the capability of a material to cause personal injury due to contact with or entry into the body via inhalation, ingestion, skin contact, or eye contact. Only the hazards that arise from an inherent toxic property of the material or its products of decomposition or combustion shall be considered. Injury resulting from the heat of a fire or from the force of an explosion shall not be considered.

2-1.2 In general, the health hazard that results from a fire or other emergency condition is one of acute (single) short-term exposure to a concentration of a hazardous material. This exposure may vary from a few seconds to as long as one hour. The physical exertion demanded by fire-fighting or other emergency activity may be expected to intensify the effects of any exposure. In addition, the hazard under ambient conditions will likely be exaggerated at elevated temperatures. Health hazards that may result from chronic or repeated long-term exposure to low concentrations of a hazardous material shall not be considered.

2-1.3 The oral route of exposure, i.e. ingestion, is highly unlikely under the conditions anticipated by this standard. If situations are encountered, however, where the oral toxicity values indicate a significantly different health hazard rating than from other, more likely routes of exposure or where the oral toxicity values would tend to either exaggerate or minimize the hazards likely to be encountered, then professional judgement shall be exercised in assigning the health hazard rating. In such cases, other routes of entry may be considered to be more appropriate in assessing the hazard. Also, based on professional judgement, it may be appropriate to either increase or decrease the health hazard rating to more accurately assess the likely degree of hazard that will be encountered under the conditions anticipated by this standard. Similarly, inhalation of dusts and mists is unlikely under the conditions anticipated by this standard. In such cases, the health hazard ratings should also be based on data for the more likely routes of exposure.

2-1.4 This chapter shall consider two major categories of health hazards in emergencies. One originates with the inherent physical and toxic properties of the material; the other arises from the generation of toxic products during decomposition or combustion of the material. For purposes of assigning the health hazard rating, only the inherent physical and toxic properties of the material shall be considered unless the combustion or decomposition products present a significantly greater degree of risk.

2-1.5 The degree of hazard shall indicate to fire fighting and emergency response personnel one of the following: that they can work safely only with specialized protective equipment; that they can work safely with suitable respiratory protective equipment; or that they can work safely in the area with ordinary clothing.

2-2 Definitions.

Health Hazard. The likelihood of a material to cause, either directly or indirectly, temporary or permanent injury or incapacitation due to an acute exposure by contact, inhalation, or ingestion.

2-3 Degrees of Hazard.

2-3.1 The degrees of health hazard shall be ranked according to the probable severity of the effects of exposure to personnel as follows:

4 Materials that, on very short exposure, could cause death or major residual injury, including those that are too dangerous to be approached without specialized protective equipment. This degree usually includes:

Materials that, under normal conditions or under fire conditions, are extremely hazardous (i.e., toxic or corrosive) through inhalation or through contact with or absorption by the skin;

Materials whose LD_{50} for acute oral toxicity is less than or equal to 5 milligrams per kilogram (mg/kg);

Materials whose LD_{50} for acute dermal toxicity is less than or equal to 40 milligrams per kilogram (mg/kg);

Dusts and mists whose LC_{50} for acute inhalation toxicity is less than or equal to 0.5 milligrams per liter (mg/L);

Any liquid whose saturated vapor concentration at 20 °C is equal to or greater than ten times its LC_{50} for acute inhalation toxicity, if its LC_{50} is less than or equal to 1000 parts per million (ppm);

Gases whose LC_{50} for acute inhalation toxicity is less than or equal to 1000 parts per million (ppm).

3 Materials that, on short exposure, could cause serious temporary or residual injury, including those requiring protection from all bodily contact. This degree usually includes:

Materials that give off highly toxic combustion products;

Materials whose LD_{50} for acute oral toxicity is greater than 5 milligrams per kilogram (mg/kg), but less than or equal to 50 milligrams per kilogram (mg/kg);

Materials whose LD_{50} for acute dermal toxicity is greater than 40 milligrams per kilogram (mg/kg), but less than or equal to 200 milligrams per kilogram (mg/kg);

Dusts and mist whose LC_{50} for acute inhalation toxicity is greater than 0.5 milligrams per liter (mg/L), but less than or equal to 2 milligrams per liter (mg/L);

Any liquid whose saturated vapor concentration at 20 °C is equal to or greater than its LC_{50} for acute inhalation toxicity, if its LC_{50} is less than or equal to 3000 parts per million (ppm) and that does not meet the criteria for degree of hazard 4;

Gases whose LC_{50} for acute inhalation toxicity is greater than 1000 parts per million (ppm), but less than or equal to 3000 parts per million (ppm);

Materials that either are severely corrosive to skin on single, short exposure or cause irreversible eye damage.

2 Materials that, on intense or short exposure, could cause temporary incapacitation or possible residual injury, including those requiring the use of respiratory protective equipment that has an independent air supply. This degree usually includes:

Materials that give off toxic or highly irritating combustion products;

Materials that, under normal conditions or fire conditions, give off toxic vapors that lack warning properties;

Materials whose LD_{50} for acute oral toxicity is greater than 50 milligrams per kilogram, but less than or equal to 500 milligrams per kilogram (mg/kg);

Materials whose LD_{50} for acute dermal toxicity is greater than 200 milligrams per kilogram (mg/kg), but less than or equal to 1000 milligrams per kilogram (mg/kg).

Dusts and mists whose LC_{50} for acute inhalation toxicity is greater than 2 milligrams per liter (mg/L), but less than or equal to 10 milligrams per liter (mg/L);

Any liquid whose saturated vapor concentration at 20 °C is equal to or greater than one-fifth (1/5) its LC_{50} for acute inhalation toxicity, if its LC_{50} is less than or equal to 5000 parts per million (ppm) and that does not meet the criteria for either degree of hazard 3 or degree of hazard 4;

Gases whose LC_{50} for acute inhalation toxicity is greater than 3000 parts per million (ppm), but less than or equal to 5000 parts per million (ppm);

Materials that cause severe but reversible respiratory, skin, or eye irritation.

1 Materials that, on short exposure, could cause irritation, but only minor residual injury, including those requiring the use of an approved air-purifying respirator. This degree usually includes:

Materials that, under fire conditions, give off irritating combustion products;

Materials that, under fire conditions, cause skin irritation, but not destruction of tissue;

Materials whose LD_{50} for acute oral toxicity is greater than 500 milligrams per kilogram (mg/kg), but less than or equal to 2000 milligrams per kilogram (mg/kg);

Materials whose LD_{50} for acute dermal toxicity is greater than 1000 milligrams per kilogram (mg/kg), but less than or equal to 2000 milligrams per kilogram (mg/kg);

Dusts and mists whose LC_{50} for acute inhalation toxicity is greater than 10 milligrams per liter (mg/L), but less than or equal to 200 milligrams per liter (mg/L);

Gases and vapors whose LC_{50} for acute inhalation toxicity is greater than 5000 parts per million (ppm), but less than or equal to 10,000 parts per million (ppm);

Materials that are moderate respiratory irritants or that cause slight to moderate eye irritation.

0 Materials that on short exposure under fire conditions, would offer no hazard beyond that of ordinary combustible materials. This degree usually includes:

Materials whose LD_{50} for acute oral toxicity is greater than 2000 milligrams per kilogram (mg/kg);

Materials whose LD_{50} for acute dermal toxicity is greater than 2000 milligrams per kilogram (mg/kg);

Dusts and mists whose LC_{50} for acute inhalation toxicity is greater than 200 milligrams per liter (mg/L);

Gases and vapors whose LC_{50} for acute inhalation toxicity is greater than 10,000 parts per million (ppm).

Chapter 3 Flammability Hazards

3-1 General.

3-1.1 This chapter shall address the degree of susceptibility of materials to burning. Since many materials will burn under one set of conditions but will not burn under others, the form or condition of the material shall be considered, along with its inherent properties.

3-2 Degrees of Hazard.

3-2.1 The degrees of hazard shall be ranked according to the susceptibility of materials to burning as follows:

4 Materials that will rapidly or completely vaporize at atmospheric pressure and normal ambient temperature or that are readily dispersed in air, and which will burn readily. This degree usually includes:

Flammable gases;

Flammable cryogenic materials;

Any liquid or gaseous material that is liquid while under pressure and has a flash point below 73 °F (22.8 °C) and a boiling point below 100 °F (37.8 °C) (i.e. Class IA flammable liquids);

Materials that ignite spontaneously when exposed to air.

3 Liquids and solids that can be ignited under almost all ambient temperature conditions. Materials in this degree produce hazardous atmospheres with air under almost all ambient temperatures or, though unaffected by ambient temperatures, are readily ignited under almost all conditions. This degree usually includes:

Liquids having a flash point below 73 °F (22.8 °C) and having a boiling point at or above 100 °F (37.8 °C) and those liquids having a flash point at or above 73 °F (22.8 °C) and below 100 °F (37.8 °C) (i.e. Class IB and Class IC flammable liquids);

Materials that on account of their physical form or environmental conditions can form explosive mixtures with air and that are readily dispersed in air, such as dusts of combustible solids and mists of flammable or combustible liquid droplets,

Materials that burn with extreme rapidity, usually by reason of self-contained oxygen (e.g., dry nitrocellulose *and many organic peroxides*).

2 Materials that must be moderately heated or exposed to relatively high ambient temperatures before ignition can occur. Materials in this degree would not under normal conditions form hazardous atmospheres with air, but under high ambient temperatures or under moderate heating may release vapor in sufficient quantities to produce hazardous atmospheres with air. This degree usually includes:

Liquids having a flash point above 100 °F (37.8 °C), but not exceeding 200 °F (93.4 °C) (i.e. Class II and Class IIIA combustible liquids);

Solid materials in the form of coarse dusts that may burn rapidly but that generally do not form explosive atmospheres with air;

Solid materials in a fibrous or shredded form that may burn rapidly and create flash fire hazards, such as cotton, sisal, and hemp;

Solids and semisolids that readily give off flammable vapors.

1 Materials that must be preheated before ignition can occur. Materials in this degree require considerable preheating, under all ambient temperature conditions, before ignition and combustion can occur. This degree usually includes:

Materials that will burn in air when exposed to a temperature of 1500 °F (815.5 °C) for a period of 5 minutes or less;

Liquids, solids, and semisolids having a flash point above 200 °F (93.4 °C) (i.e. Class IIIB combustible liquids);

Most ordinary combustible materials.

0 Materials that will not burn. This degree usually includes any material that will not burn in air when exposed to a temperature of 1500 °F (815.5 °C) for a period of 5 minutes.

Chapter 4 Reactivity (Instability) Hazards

4-1 General.

4-1.1 This chapter shall address the degree of susceptibility of materials to release energy. Some materials are capable of rapid release of energy by themselves, as by self-reaction or polymerization, or can undergo violent explosive reaction if contacted with water or other extinguishing agents or with certain other materials.

4-1.2 The violence of reaction or decomposition of materials may be increased by heat or pressure, by mixture with certain other materials to form fuel-oxidizer combinations, or by contact with incompatible substances, sensitizing contaminants, or catalysts.

4-1.3 Because of the wide variations of accidental combinations possible in fire or other emergencies, these extraneous hazard factors (except for the effect of water) cannot be applied in a general numerical scaling of hazards. Such extraneous factors must be considered individually in order to establish appropriate safety factors, such as separation or segregation. Such individual consideration is particularly important where significant amounts of materials are to be stored or handled. Guidance for this consideration is provided in NFPA 49, *Hazardous Chemicals Data*.

4-1.4 The degree of reactivity hazard shall indicate to fire fighting and emergency personnel that the area should be evacuated, that a fire must be fought from a protected location, that caution must be used in approaching a spill or fire to apply extinguishing agents, or that a fire may be fought using normal procedures.

4-2 Definitions.

4-2.1 For the purposes of this standard, a reactive material is one that can enter into a violent chemical reaction with water. Reactions with other materials may also result in violent release of energy but are beyond the scope of this standard.

4-2.2 For the purposes of this standard, an unstable material is one that, in the pure state or as commerially produced, will vigorously polymerize, decompose or condense, become self-reactive, or otherwise undergo a violent chemical change under conditions of shock, pressure, or temperature.

4-2.3 Stable materials are those that normally have the capacity to resist changes in their chemical composition, despite exposure to air, water, and heat as encountered in fire emergencies.

4-3 Degrees of Hazard.

4-3.1 The degrees of hazard shall be ranked according to ease, rate, and quantity of energy release as follows:

4 Materials that in themselves are readily capable of detonation or explosive decomposition or explosive reaction at normal temperatures and pressures. This degree usually includes materials that are sensitive to localized thermal or mechanical shock at normal temperatures and pressures.

3 Materials that in themselves are capable of detonation or explosive decomposition or explosive reaction, but that require a strong initiating source or that must be heated under confinement before initiation. This degree usually includes:

Materials that are sensitive to thermal or mechanical shock at elevated temperatures and pressures;

Materials that react explosively with water without requiring heat or confinement.

2 Materials that readily undergo violent chemical change at elevated temperatures and pressures. This degree usually includes:

Materials that exhibit an exotherm at temperatures less than or equal to 150 °C when tested by differential scanning calorimetry;

Materials that may react violently with water or form potentially explosive mixtures with water.

1 Materials that in themselves are normally stable, but that can become unstable at elevated temperatures and pressure. This degree usually includes:

Materials that change or decompose on exposure to air, light, or moisture;

Materials that exhibit an exotherm at temperatures greater than 150 °C, but less than or equal to 300 °C, when tested by differential scanning calorimetry.

0 Materials that in themselves are normally stable, even under fire conditions. This degree usually includes:

Materials that do not react with water;

Materials that exhibit an exotherm at temperatures greater than 300 °C but less than or equal to 500 °C when tested by differential scanning calorimetry;

Materials that do not exhibit an exotherm at temperature less than or equal to 500 °C when tested by differential scanning calorimetry.

Chapter 5 Special Hazards

5-1 General.

5-1.1 This chapter shall address the other properties of the material that may cause special problems or require special fire fighting techniques.

5-1.2 Special hazards symbols shall be shown in the fourth space of the diagram or immediately above or below the entire symbol.

5-2 Symbols.

5-2.1 Materials that demonstrate unusual reactivity with water shall be identified with the letter W with a horizontal line through the center (~~W~~).

5-2.2 Materials that possess oxidizing properties shall be identified by the letters OX.

Chapter 6 Identification of Materials by Hazard Signal System

6-1 One of the systems delineated in the following illustrations shall be used for the implementation of this standard.

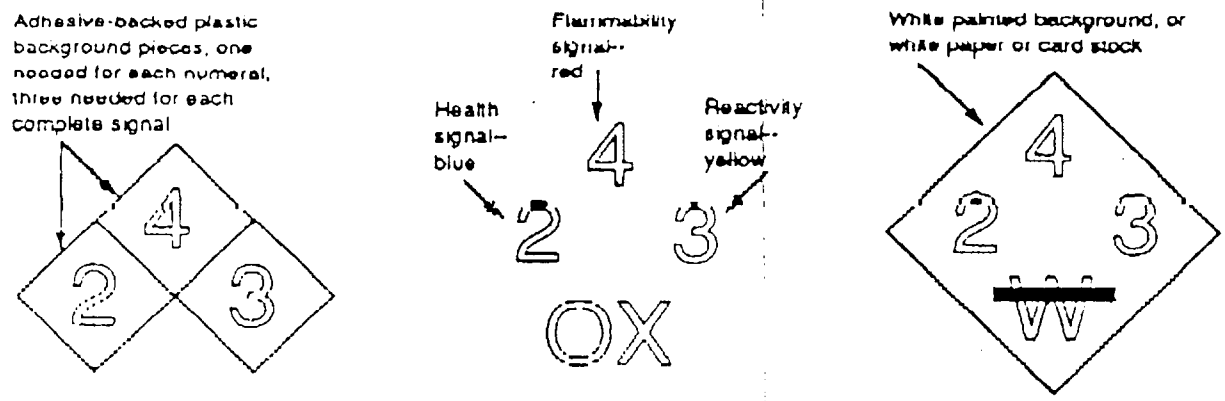

Figure 1 For use where specified color background is used with numerals of contrasting colors.

Figure 2 For use where white background is necessary.

Figure 3 For use where white background is used with painted numerals, or for use when signal is in the form of sign or placard.

Figure 6-1 Alternate arrangements for display of NFPA 704 Hazard Identification System.

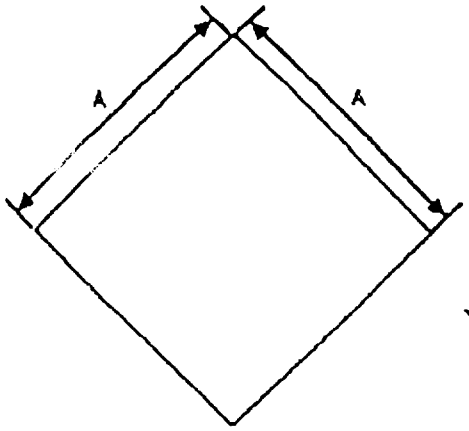

When painted (use same dimensions for sign or placard)

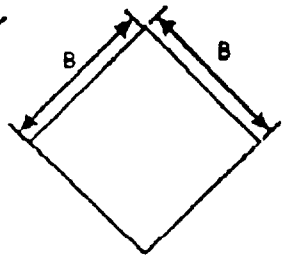

When made from adhesive-backed plastic (one for each numeral, three necessary for each complete signal)

Minimum Dimensions of White Background for Signals (White Background is Optional)

Size of Signals H	W	T	A	B
1	0.7	5/32	2 1/2	1 1/4
2	1.4	5/16	5	2 1/2
3	2.1	15/32	7 1/2	3 3/4
4	2.8	5/8	10	5
6	4.2	15/16	15	7 1/2

All dimensions given in inches

Exception: For containers with a capacity of one gallon or less, symbols may be reduced in size, provided:

1. This reduction is proportionate.

2. The color coding is retained.

3. The vertical and horizontal dimensions of the diamond are not less than 1 in. (2.5 cm).

4. The individual numbers are no smaller than 1/8 in. tall.

Color of numerals 1,2,3,4 should be as indicated

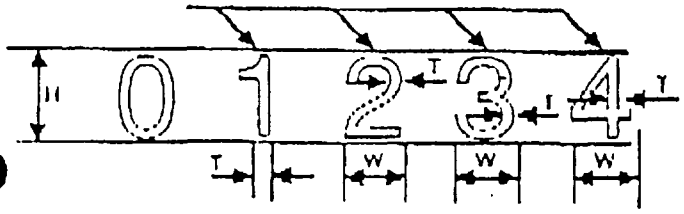

Note: Style of numerals shown is optional.

Figure 6-2 Dimensions of NFPA 704 placard and numerals.

Arrangement and Order of Signals – Optional Form of Application

Distance at which signals must be legible	Minimum size of signals required
50 feet	1"
75 feet	2"
100 feet	3"
200 feet	4"
300 feet	6"

Note: This shows the correct spatial arrangement and order of signals used for identification of materials by hazard.

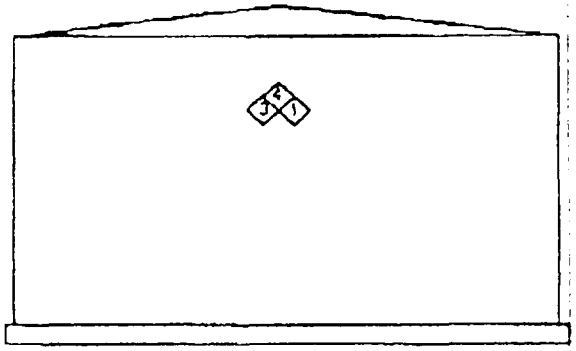

Figure 6-3 Minimum size of numerals for legibility at distance.

Appendix A

This Appendix is not a part of the requirements of this NFPA document, but is included for information purposes only.

A-1 This is a system for the identification of hazards to life and health of people in the prevention and control of fires and explosions in the manufacture and storage of materials. The bases for identification are the physical properties and characteristics of materials that are known or can be determined by standard methods. Technical terms, expressions, trade names, etc., are purposely avoided as this system is concerned only with the identification of the involved hazard from a standpoint of safety.

The explanatory material in this Appendix is to assist users of this standard, particularly the person who assigns the degree of hazard in each category.

Identification of Health Hazard Color Code: BLUE		Identification of Flammability Color Code: RED		Identification of Reactivity (Stability) Color Code: YELLOW	
	Type of Possible Injury	Susceptibility of Materials to Burning		Susceptibility to Release of Energy	
Signal		Signal		Signal	
4	Materials that on very short exposure could cause death or major residual injury.	4	Materials that will rapidly or completely vaporize at atmospheric pressure and normal ambient temperature, or that are readily dispersed in air and that will burn readily.	4	Materials that in themselves are readily capable of detonation or of explosive decomposition or reaction at normal temperatures and pressures.
3	Materials that on short exposure could cause serious temporary or residual injury.	3	Liquids and solids that can be ignited under almost all ambient temperature conditions.	3	Materials that in themselves are capable of detonation or explosive decomposition or reaction but require a strong initiating source or which must be heated under confinement before initiation or which react explosively with water.
2	Materials that on intense or continued but not chronic exposure could cause temporary incapacitation or possible residual injury.	2	Materials that must be moderately heated or exposed to relatively high ambient temperatures before ignition can occur.	2	Materials that readily undergo violent chemical change at elevated temperatures and pressures or which react violently with water or which may form explosive mixtures with water.
1	Materials that on exposure would cause irritation but only minor residual injury.	1	Materials that must be preheated before ignition can occur.	1	Materials that in themselves are normally stable, but which can become unstable at elevated temperatures and pressures.
0	Materials that on exposure under fire conditions would offer no hazard beyond that of ordinary combustible material.	0	Materials that will not burn.	0	Materials that in themselves are normally stable, even under fire exposure conditions, and which are not reactive with water.

A-2 In developing this edition of NFPA 704, the Committee on Fire Hazards of Materials determined that the standard should provide quantitative guidelines for determining the numerical health hazard rating of a material. In addition, the Committee agreed that a "4" or a "3" health hazard rating should be assigned to any material classified as a "Poison - Inhalation Hazard" by the U.S. Department of Transportation (DOT). This classification, "Poison-Inhalation Hazard", was adopted by DOT from the United Nations (UN) criteria detailed in the UN publication, *Recommendations on the Transport of Dangerous Goods*, 4th Edition - Revised, 1986. (See also Notice of Proposed Rulemaking, *Federal Register*, Vol. 50, p. 5270 et seq., February 7, 1985, and Notice of Final Rule, *Federal Register*, Vol. 50, p. 41092 et seq., October 8, 1985.)

The UN criteria for inhalation toxicity is based upon the LC_{50} and saturated vapor concentration of the material. Furthermore, in addition to inhalation toxicity, the UN has established criteria for oral and dermal toxicity, as well as corrosivity. Based upon these criteria, the UN assigns a given material to categories called Packing Groups I, II, or III. Packing Group I materials represent a severe hazard in transport, Group II materials a serious hazard, and Group III materials a low hazard.

The Committee decided to adopt the UN criteria for toxicity and corrosivity, and correlate Packing Groups I, II, and III with the health hazard ratings "4," "3," and "2," respectively. Adoption of the UN system has several advantages. First, it addresses hazards in transportation, which are similar to the type of emergencies likely to be encountered by fire fighting personnel and emergency responders. Most other hazard ranking systems have been developed for occupational exposures. Secondly, the UN system is well established, and it is presumed that a large number of chemical manufacturers have already classified (or can easily classify) materials [illegible]

chemicals can assign "4," "3," or "2" health hazard ratings by establishing if chemicals have been assigned to UN Packing Groups due to toxicity or corrosivity.

In order to establish "1" and "0" health hazard rankings, the Committee utilized criteria for the "1" and "0" ratings contained in the Hazardous Materials Identification System (HMIS™) developed by the National Paint & Coatings Association (NPCA) (Hazardous Materials Identification System Revised, Implementation Manual, 1981). Although the NPCA criteria were developed for occupational exposure, the "1" and "0" criteria are on the low end of the hazard spectrum and are fairly consistent with, and complementary to, the "4," "3," and "2" ratings based upon the UN criteria. No UN criteria was established for eye irritation, and the Committee adopted NPCA "3," "2," and "1," and "0" criteria as health hazard ratings for eye irritation.

The Committee made a number of revisions to the proposed hazard rating system to provide conformity with existing industrial practice and to recognize limitations and availability of corrosivity and eye irritation into a single "skin/eye contact" category and utilize descriptive terms for the health hazard ratings. Minor changes were made to the "2," "1," and "0" criteria for oral toxicity and to the "1" and "0" criteria for dermal toxicity. Specifically, the distinction between solids and liquids in the oral toxicity criteria was eliminated, and the cutoff between "1" and "0" rankings for oral and dermal toxicity was lowered from 5000 to 2000 mg/kg.

In summary, the "4," "3," and "2" health hazard rankings for oral, dermal, and inhalation toxicity are based primarily on UN criteria. The "1" and "0" health hazard rankings for oral, dermal, and inhalation toxicity, and all of the "skin/eye contact" rankings are based primarily on NPCA criteria.

For the assistance of the user of this standard, the following definitions are quoted from Section 6.5 of Recommendations on the Transport of Dangerous Goods, Fourth Revised Edition, 1986, published by the United Nations, New York, NY.

"LD_{50} for acute oral toxicity:

"That dose of the substance administered which is most likely to cause death within 14 days in one half of both male and female young adult albino rats. The number of animals tested shall be sufficient to give a statistically significant result and be in conformity with good pharmacological practice. The result is expressed in milligrams per kilogram of body weight.

"LD_{50} for acute dermal toxicity:

"That dose of the substance which, administered by continuous contact for 24 hours with the bare skin of albino rabbits, is most likely to cause death within 14 days in one half of the animals tested. The number of animals tested shall be sufficient to give a statistically significant result and be in conformity with good pharmacological practice. The result is expressed in milligrams per kilogram of body weight.

"LC_{50} for acute toxicity on inhalation:

"That concentration of vapour, mist or dust which, administered by continuous inhalation to both male and female young adult albino rats for one hour, is most likely to cause death within 14 days in one half of the animals tested. If the substance is administered to the animals as dust or mist, more than 90 percent of the particles available for inhalation in the test must have a diameter of 10 microns or less, provided that it is reasonably foreseeable that such concentrations could be encountered by man during transport. The result is expressed in milligrams per liter of air for dusts and mists or in millilitres per cubic meter of air (parts per million) for vapors."

The following information quoted from Section 6.4 of the above-cited Recommendations also applies:

"The criteria for inhalation toxicity of dusts and mists are based on LC_{50} data relating to 1 hour exposures and where such information is available it should be used. However, where only LC_{50} data relating to 4 hour exposures to dusts and mists are available, such figures can be multipled by four and the product substituted in the above criteria, i.e. LC_{50} (4 hour) × 4 is considered equivalent of LC_{50} (1 hour).

"The criteria for inhalation toxicity of vapors are based on LC_{50} data relating to 1 hour exposures, and where such information is available it should be used. However, where only LC_{50} data relating to 4 hour exposures to dusts and mists are available, such figures can be multiplied by two and the product substituted in the above criteria, i.e. LC_{50} (4 hour) × 2 is considered equivalent of LC_{50} (1 hour)."

Appendix B

This Appendix is not a part of the requirements of this NFPA document, but is included for information purposes only.

The information contained within Appendix B is derived from introductory explanatory material on the 704 system contained within NFPA 49, *Hazardous Chemicals Data*; and NFPA 325M, *Fire Hazard Properties of Flammable Liquids, Gases, and Volatile Solids*. The following paragraphs summarize the meanings of the numbers in each hazard category and explain what a number should tell fire fighting personnel about protecting themselves and how to fight fires where the hazard exists.

Health.

In general, health hazard in fire fighting is that of a single exposure that may vary from a few seconds up to an hour. The physical exertion demanded in fire fighting or other emergency conditions may be expected to intensify the effects of any exposure. Only hazards arising out of an inherent property of the material are considered. The following explanation is based upon protective equipment normally used by fire fighters.

4 Materials too dangerous to health to expose fire fighters. A few whiffs of the vapor could cause death, or the vapor or liquid could be fatal on penetrating the fire fighter's normal full protective clothing. The normal full protective clothing and breathing apparatus available to the average fire department will not provide adequate protection against inhalation or skin contact with these materials.

3 Materials extremely hazardous to health but areas may be entered with extreme care. Full protective clothing, including self-contained breathing apparatus, coat, pants, gloves, boots, and bands around legs, arms, and waist should be provided. No skin surface should be exposed.

2 Materials hazardous to health, but areas may be entered freely with full-faced mask self-contained breathing apparatus that provides eye protection.

1 Materials only slightly hazardous to health. It may be desirable to wear self-contained breathing apparatus.

0 Materials that on exposure under fire conditions would offer no hazard beyond that of ordinary combustible material.

Flammability.

Susceptibility to burning is the basis for assigning degrees within this category. The method of attacking the fire is influenced by this susceptibility factor.

4 Very flammable gases or very volatile flammable liquids. Shut off flow and keep cooling water streams on exposed tanks or containers.

3 Materials that can be ignited under almost all normal temperature conditions. Water may be ineffective because of the low flash point.

2 Materials that must be moderately heated before ignition will occur. Water spray may be used to extinguish the fire because the material can be cooled below its flash point.

1 Materials that must be preheated before ignition can occur. Water may cause frothing if it gets below the surface of the liquid and turns to steam. However, water fog gently applied to the surface will cause a frothing that will extinguish the fire.

0 Materials that will not burn.

Reactivity (Stability).

The assignment of degrees in the reactivity category is based upon the susceptibility of materials to release energy either by themselves or in combination with water. Fire exposure is one of the factors considered along with conditions of shock and pressure.

4 Materials that (in themselves) are readily capable of detonation or of explosive decomposition or explosive reaction at normal temperatures and pressures. Includes materials that are sensitive to mechanical or localized thermal shock. If a chemical with this hazard rating is in an advanced or massive fire, the area should be evacuated.

3 Materials that (in themselves) are capable of detonation or of explosive decomposition or of explosive reaction but which require a strong initiating source or which must be heated under confinement before initiation. Includes materials that are sensitive to thermal or mechanical shock at elevated temperatures and pressures or that react explosively with water without requiring heat or confinement. Fire fighting should be done from a location protected from the effects of an explosion.

2 Materials that (in themselves) are normally unstable and readily undergo violent chemical change but do not detonate. Includes materials that can undergo chemical change with rapid release of energy at normal temperatures and pressures or that can undergo violent chemical change at elevated temperatures and pressures. Also includes those materials that may react violently with water or that may form potentially explosive mixtures with water. In advanced or massive fires, fire fighting should be done from a safe distance or from a protected location.

1 Materials that (in themselves) are normally stable but which may become unstable at elevated temperatures and pressures or which may react with water with some release of energy but not violently. Caution must be used in approaching the fire and applying water.

0 Materials that (in themselves) are normally stable even under fire exposure conditions and that are not reactive with water. Normal fire fighting procedures may be used.

Appendix C Flammability

This Appendix is not a part of the requirements (recommendations) of this NFPA document, but is included for information purposes only.

The selection of the flash point breaks for the assigning of degrees within the Flammability category has been based upon the recommendations of the Technical Committee on Classification and Properties of Flammable Liquids of the NFPA Committee on Flammable Liquids. This Technical Committee initiated the study that led to the development of this standard. Close cooperation between the Technical Committee and the Committee on Fire Hazards of Materials has continued.

Flash point tells several things. One, if the liquid has no flash point, it is not a flammable liquid. Two, if it has a flash point, it must be considered flammable or combustible. Three, the flash point is normally an indication of susceptibility to ignition.

The flash point test may give results that would indicate that the liquid is nonflammable or that it comes under degree 1 or 2 when it is a mixture containing, for example, carbon tetrachloride. As a specific example, sufficient carbon tetrachloride can be added to gasoline so that the mixture has no flash point. However, on standing in an open container, the carbon tetrachloride will evaporate more rapidly than the gasoline. Over a period of time, therefore, the residual liquid will first show a high flash point, then a progressively lower one until the flash point of the final 10 percent of the original sample will approximate that of the heavier fractions of the gasoline. In order to evaluate the fire hazard of such liquid mixtures, fractional evaporation tests can be conducted at room temperature in open vessels. After evaporation of appropriate fractions, such as 10, 20, 40, 60, and 90 percent of the original sample, flash point tests can be conducted on the residue. The results of such tests indicate the grouping into which the liquid should be placed if the conditions of use are such as to make it likely that appreciable evaporation will take place. For open system conditions, such as in

n dip tanks, the open-cup test method may give a more reliable indication of the flammability hazard.

In the interest of reproducibility of results, it is recommended that:

The flash point of liquids having a viscosity less than 45 SUS (Saybolt Universal Seconds) at 100 °F (37.8 °C) and a flash point below 200 °F (93.4 °C) may be determined in accordance with ASTM D-56-79, *Standard Method of Test for Flash Point by the Tag Closed Tester*. (In those countries that use the Abel or Abel-Pensky closed cup tests as an official standard, these tests will be equally acceptable to the Tag Closed Cup Method.)

The flash point of aviation turbine fuels may be determined in accordance with ASTM D3828-81, *Test Method for Flash Point by Setaflash Closed Tester*.

For liquids having flash points in the range of 32 °F (0 °C) to 230 °F (110 °C) the determination may be made in accordance with ASTM D3278-82, *Flash Point of Liquids by Setaflash Closed Tester*.

For viscous and solid chemicals the determination may be made in accordance with ASTM E502-74, *Flash Point of Chemicals by Closed Cup Methods*.

The flash point of liquids having a viscosity of 45 SUS (Saybolt Universal Seconds) or more at 100 °F (37.8 °C) or a flash point of 200 °F (93.4 °C) or higher may be determined in accordance with ASTM D-93-79, *Standard Method of Test for Flash Point by the Pensky-Martens Closed Tester*.

Appendix D Reactivity, Differential Scanning Calorimetry (DSC)

This Appendix is not a part of the requirements (recommendations) of this NFPA document, but is included for information purposes only.

Differential Scanning Calorimetry (DSC) is the primary screening test for assessing reactivity hazard. It indicates whether a material undergoes an exothermic or endothermic reaction, and a general temperature range in which the reaction occurs.

This test is routinely run before other more sophisticated tests are run, such as an Accelerating Rate Calorimetry (ARC) test or drop weight testing. Heats of reaction, heats of decomposition, and heats of fusion, as well as kinetic information, can be determined by DSC for homogenous solids and liquids, as well as heterogenous systems.

DSC data should be used with caution, avoiding any inference that the test conditions duplicate those that the material will experience in a foreign environment.

A DSC test consists of heating a small quanity of material (typically 1-10 milligrams) held in a sample container from room temperature to approximately 500 °C. Exotherms are usually detected by the DSC test at temperatures higher than that expected in systems that are more adiabatic (insulated tanks, large masses of material, etc.)

Small changes in the composition of a material can have a significant effect on its thermal behavior. For example, a material may not decompose in the container in which DSC is done, but it may be catalytically decomposed by the material of construction of the container used in service.

The DSC is a screening test that is used primarily to determine if further testing is required.

Appendix E Referenced Publications

E-1 The following documents or portions thereof are referenced within this standard for informational purposes only and thus are not considered part of the requirements of this document. The edition indicated for each reference is the current edition as of the date of the NFPA issuance of this document.

E-1.1 NFPA Publications. National Fire Protection Association, 1 Batterymarch Park, P.O. Box 9101, Quincy, MA 02269-9101.

NFPA 49-1975, *Hazardous Chemicals Data*

NFPA 325M-1984, *Fire Hazard Properties of Flammable Liquids, Gases, and Volatile Solids.*

E-1.2 ASTM Publications. American Society for Testing and Materials, 1916 Race Street, Philadelphia, PA 19103.

ASTM D-56-87, *Standard Method for Test for Flash Point by the Tag Closed Tester*

ASTM D-3828-87, *Test Method for Flash Point by Setaflash Closed Tester*

ASTM D-3278-82, *Flash Point of Liquids by Setaflash Closed Tester*

ASTM D-93-85, *Test Methods for Flash Point by the Pensky-Martens Closed Tester*

ASTM E-502-84, *Flash Point of Chemicals by Closed Cup Methods.*

E-1.3 Other Publications.

Tou, J.C. and Whiting, L.F.; "A Cradle-Glass Ampoule Sample Container for Differential Scanning Calorimetric Analysis"; Thermochimica Acta; Vol. 42; Elsevier Scientific Publishing Co.; Amsterdam; 1980.

Whiting, L.F., LaBean, M.S., and Eadie, S.S.; "Evaluation of a Capillary Tube Sample Container for Differential Scanning Calorimetry"; Thermochimica Acta; Vol. 136; Elsevier Scientific Publishing Co.; Amsterdam; 1988.

Index

©1990 National Fire Protection Association, All Rights Reserved.

The copyright in this index is separate and distinct from the copyright in the document which it indexes. The licensing provisions set forth for the document are not applicable to this index. This index may not be reproduced in whole or in part by any means without the express written permission of the National Fire Protection Association, Inc.

-A-

Applicability of standard 1-2
Description of system 1-4
Differential Scanning Calorimetry (DSC) ..... App. D

-F-

Flammability hazards ..... 1-5.2, Chap. 3, App. G
Degrees of 1-4.2, 3-2
Identification of ..... App. A
Meaning of numbers ..... App. B
Flash points ..... 1-5.2, App. C

-H-

Hazard signal system, identification of materials by ..... Chap. 6
Hazards ..... see also specific type such as Health hazard
Assignment of ratings 1-5
Categories 1-4.1
Degree of severity 1-4.1
Identification chart ..... App. A
Special ..... see Special hazards
Health hazards ..... 1-4.2, 1-5.2, Chap. 2
Categories considered 2-1.4
Definitions 2-2
Degrees of 2-1.5, 2-3
Identification of ..... App. A
Meaning of numbers ..... App. B

-I-

Identification of materials ..... Chap. 6
Ingestion 2-1.2
Instability hazards ..... see Reactivity hazards

-O-

Objective of system 1-1.2

-P-

Purpose of standard 1-3

-R-

Ratings, assignment of 1-5
Reactivity hazards ..... 1-5.2, Chap. 4
Assessing ..... App. D
Definitions 4-2
Degrees of 1-4.2, 1-4.3, 4-1.4, 4-3
Identification of ..... App. A
Meaning of numbers ..... 1-4.3, App. B

-S-

Scope of standard 1-1
Special hazards ..... Chap. 5
Symbols for 5-2
Stable materials 4-2.3
Storage conditions 1-5.2, 1-5.3

-U-

UN criteria ..... App. A
Unstable materials 4-2.2

SECTION F - CONTINGENCY PLAN

The Contingency Plan for the East Hartford Facility is presented here as Exhibit F - 1. This Contingency Plan and the information contained herein has been prepared in accordance with the requirements of 40 CFR 270.14(b)(7) and 264 Subpart D, and the Connecticut Hazardous Waste Regulations Section 22a-449(c)-100 through 110.

Based upon DEP's review comments this Contingency Plan has been updated, revised and reorganized. As of this writing Pratt & Whitney is working to further update this Contingency Plan to incorporate detailed emergency response and evacuation procedures which will address many types of incidents including those involving hazardous waste. It is recognized that this current Contingency Plan is lacking in its description of these procedures. It is anticipated that the updated plan will be completed by December 31, 1991.

The Contingency Plan will be revised and amended if the facility permit is revised; the plan fails in an emergency; the facility's operations for which the plan has been prepared change in any way that alters the Contingency Plan; the list of Emergency Coordinators, their telephone numbers, and/or addresses change; or the P&W Fire Department emergency equipment changes in a manner which alters the Contingency Plan.

As required, the plan will be sent to local police and fire departments, hospitals and the local emergency planning committee. Copies of the letters transmitting this document to these agencies are kept on file at the facility.

For the purposes of this Contingency Plan, both the Incident Commanders and the Environmental/Emergency Coordinators are considered to be Emergency Coordinators in accordance with the requirements of 40 CFR 264.55. DEP acknowledges that the Incident Commanders and the Environmental/Emergency Coordinators share duties and as such both shall be responsible for ensuring the mitigation, resolution, and appropriate notifications of spills requiring implementation of the Contingency Plan.

EXHIBIT F - 1

Contingency Plan
For
Hazardous Waste Management

CONTINGENCY PLAN
FOR
HAZARDOUS WASTE MANAGEMENT
AT
PRATT & WHITNEY
EAST HARTFORD MANUFACTURING FACILITIES
EPA I.D. #CTD990672081
(400 MAIN STREET)
and
EPA I.D. #CTD000844399
(COLT STREET)
EAST HARTFORD, CT 06108

TABLE OF CONTENTS

Section	Page
TABLE OF CONTENTS	i - iii
List of Appendices	
List of Tables	ii
List of Figures	ii
List of Acronyms	iii
A. INTRODUCTION	
1. General	A-1
2. Site Considerations	A-1
3. Traffic Patterns	A-1
4. Wastes/Generation	A-3
5. Wastewater Collection/Treatment	A-3
6. Stormwater Drainage	A-4
7. Plan/Policy	A-6
B. EMERGENCY COORDINATORS/NOTIFICATION PROCEDURES	
1. General	B-1
2. Duties and Responsibilities	B-2
3. Summary of Notification Procedures	B-6
C. DESCRIPTIONS AND QUANTITIES OF HAZARDOUS WASTE	
1. Compatibility	C-1
2. Types of Wastes and Hazardous Characteristics	C-1
3. Material Identification	C-1
D. EMERGENCY RESPONSE PROCEDURE	
1. Implementation	D-1
2. General Hazardous Waste Response Procedures	D-5
3. Evacuation Plan	D-11
4. Post-Emergency Actions	D-11
5. Post Emergency Equipment Maintenance	D-12

TABLE OF CONTENTS (Cont'd)

Section	Page
E. EMERGENCY EQUIPMENT	
1. General	E-1
2. Security System and Communications	E-1
3. Fire Fighting Resources	E-1
4. Personnel Protection Equipment and Resources	E-2
5. Spill Control Equipment	E-2
6. Emergency Equipment Testing and Maintenance	E-3
7. Less Than 90 Day Storage Areas	E-3
F. INCIDENT REPORTING REQUIREMENTS	F-1
G. COORDINATION AGREEMENTS	G-1
H. AMENDMENT AND DISTRIBUTION OF THE CONTINGENCY PLAN	H-1

LIST OF APPENDICES

APPENDIX A	Federal, State, and Local Agency Notification Requirements for Releases
APPENDIX B	Consolidated List of Covered Substances
APPENDIX C	Evacuation Plan
APPENDIX D	Emergency Equipment Inventory
APPENDIX E	Emergency Equipment Locations

LIST OF FIGURES

FIGURE 1	Location Map	A-2
FIGURE 2	Location of Discharges	A-5
FIGURE 3	Evacuation Routes	
FIGURE 4	Emergency Equipment Locations	
FIGURE 5	Locations of Less Than 90 Day Storage Areas	

LIST OF TABLES

TABLE 1	Incompatible Wastes	C-2
TABLE 2	Hazardous Waste Characteristics	C-4

LIST OF ACRONYMS USED

ASTM	American Society for Testing Material
CERCLA	Comprehensive Environmental Response Compensation and Liability Act
CFR	Code of Federal Regulations
CWA	Clean Water Act
CWS&TF	Centralized Waste Storage & Treatment Facility
CWTP	Concentrated Waste Treatment Plant
DEP	Connecticut Department of Environmental Protection
DWW	Dilute Wastewater
EHS	Extremely Hazardous Substance
EP	Extraction Procedure
EPA	U.S. Environmental Protection Agency
HWM	Hazardous Waste Management
IH&S	Industrial Hygiene & Safety
MCL	Material Engineering
MERL	Material Engineering Research Laboratory
MFG	Manufacturing
NPDES	National Pollutant Discharge Elimination System
NRC	National Response Center
P&W	Pratt & Whitney
PMC	Process Material Control Specifications
PS	Process Solution Specifications
PWA	Pratt & Whitney Specifications
RCRA	Resource Conservation and Recovery Act
RQ	Reportable Quantity
SPCC	Spill Prevention Control and Countermeasure Plan
TSA	Transportation Safety Act
TSDF	Treatment Storage Disposal Facilities

A. INTRODUCTION

1. General

This Contingency Plan has been prepared for the Pratt & Whitney East Hartford Facility at 400 Main Street East Hartford, Connecticut 06108. This facility occupies 1096.6 acres of land and employs approximately 15,000-19,000 personnel. The principal activity is the design, development, testing and manufacturing of aircraft engines.

The facility consists of a main factory complex, a separate power house, several separate office buildings, an airport with hangars and a control tower, several auxiliary buildings, engine development and test facilities, and a Concentrated Waste Treatment Plant and a Dilute Industrial Wastewater Treatment Facility.

2. Site Considerations

The Pratt & Whitney East Hartford plant is located east of the Connecticut River, south of Willow Brook, and north of Brewer Street in the Town of East Hartford, Connecticut (Refer to Figure No. 1 on the following page).

Through the north end of the P&W East Hartford complex runs Willow Brook in an east to west direction to the Connecticut River. There is a dam and pond in the vicinity of the Concentrated Waste Treatment Plant (CWTP). The 100 year flood level is 33.3 feet and is located within the pond embankments. The 500 year flood level is 36.1 feet which would also be contained. The source of this flood level data is the Flood Insurance Study for the Town of East Hartford, Connecticut, dated August 1979 prepared by the U.S. Department of Housing and Urban Development, Federal Insurance Administration.

3. Traffic Patterns

The major highways nearest to the East Hartford manufacturing facility are Routes 2 and I-84. Trucks traveling Route 2 use the Willow Street Exit and enter the facility through the Willow Street gate. These trucks then proceed on Willow Brook Road to the Concentrated Waste Treatment Plant (CWTP). Trucks exiting from I-84 proceed through the Silver Lane entrance gate onto West Connector Road, to Willow Brook Road and then to the CWTP. The maximum weight of fully loaded trucks entering the facility is 80,000 lbs. Approximately 600 tankers and 250 trailers containing hazardous and non-hazardous waste enter the facility per year. The load bearing capacity of the in-plant roads are 14,000 pounds per square foot and the road surfacing is bituminous concrete.

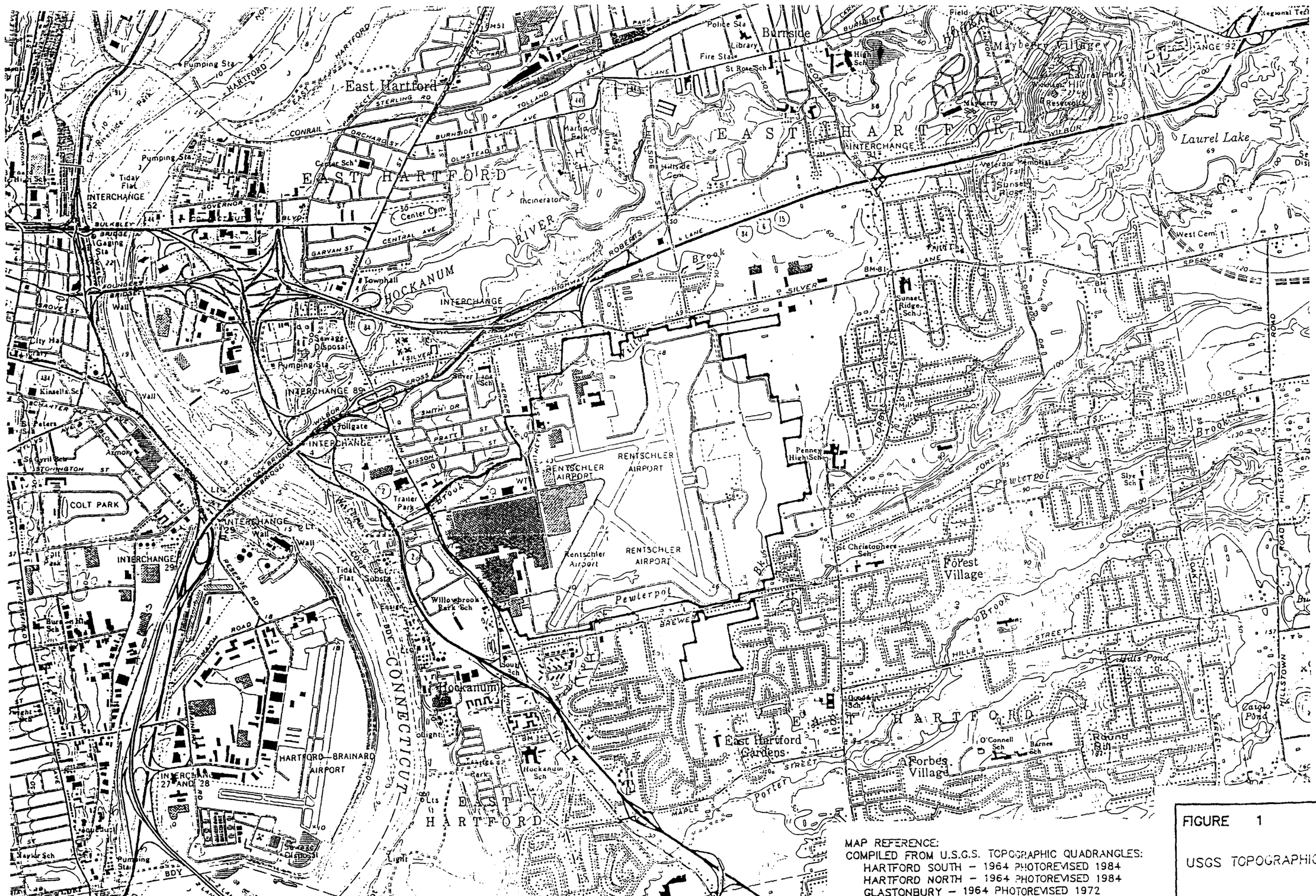

MAP REFERENCE:
COMPILED FROM U.S.G.S. TOPOGRAPHIC QUADRANGLES:
HARTFORD SOUTH – 1964 PHOTOREVISED 1984
HARTFORD NORTH – 1964 PHOTOREVISED 1984
GLASTONBURY – 1964 PHOTOREVISED 1972
MANCHESTER – 1963 PHOTOREVISED 1968

FIGURE 1

USGS TOPOGRAPHIC MAP

SCALE: 1" = 2000'

4. Wastes/Generation

This complex, in designing, developing, manufacturing and testing aircraft engines, generates large quantities of wastes through batch discharges and/or continuous discharges. These wastes include industrial wastewaters, dilute oily wastes, characteristic hazardous wastes (ignitable, corrosive, reactive and Toxic) and spent solvents.

Pratt & Whitney also utilizes a wide variety of products that are listed hazardous wastes - Acids, Alkalies, Cyanides, Alcohols, Metal Plating Solutions, Specialty Solutions, Fungicides, Epoxy, Cleaners, Resins, Paints and Solvents and many commercial chemical products listed in 40 CFR 261.33(e) and (f).

Specific processes which use the above products and which result in the generation of hazardous wastes include the following:

- Product Rinsing
- Stripping
- Electroplating
- Cleaning, Degreasing
- Etching
- Sludge Removal
- Solvent Reclaimation
- Spill Cleanup of Listed Matl's.
- Battery Replacement
- Process Decon
- Cleaning Fuel Systems
- Disposal of Obsolete Matl's.
- Closure of Units
- Plating
- Abrasive Jet Machining
- Anodizing
- Chemical Machining
- (Chemical Milling)
  Electrochemical Machining
- Machining
- Salt Bath Descaling
- Salt Bath Descaling
- Vapor Degreasing
- Alkali Cleaning
- Heat Treating
- Acid Cleaning
- Electroless Plating
- Product Filtering
- Painting Operations
- Photo Developing
- Disposal of Obsolete Matl's.
- X-Ray Testing
- Machine Oil Changes
- Routine Clean-up
- Acid Treatment (Pickling)
- Chromate Conversions
- Electrical Discharge
- Machining

5. Wastewater Collection/Treatment

Within the factory complex, several dilute industrial wastewater and dilute oily waste collection and pumping systems have been installed to provide proper containment, storage and transfer of the various wastewaters to the Pratt & Whitney Concentrated Waste Pre-Treatment Facilities and Industrial Wastewater Treatment Facilities. The Concentrated Wastewater Treatment Facilities are located on the grounds of the main complex adjacent to Willow Street. The Industrial Wastewater Treatment Facilities are located at the company's Colt Street property. At these facilities, the wastewaters are properly treated prior to discharging into the Connecticut River. This discharge is permitted under the state and federal National Pollutant Discharge Elimination System (NPDES) permit program.

Pratt & Whitney's Concentrated Waste Treatment Plant also handles concentrated wastewater, characteristic hazardous wastes, solvents, reclaimed and waste oils and solvent/oil mixtures for processing and disposal. Waste oils are characterized then segregated for reclaim or disposal. These oils are transferred from 55-gallon drums into one of three waste oil tanks at the Concentrated Waste Treatment Plant (CWTP). Licensed vendors then pick-up bulk loads for reclaim or disposal at permitted TSDF's. Waste soluble oil obtained within the manufacturing complex is collected in 500-gallon portable tanks and transported to one of two "Jeffrey" sludge separators from which the liquid fraction is pumped to the CWTP for further treatment and disposal.

Hazardous wastes will be stored at the facility in the Centralized Waste Storage & Transfer Facility (CWS&TF), as well as in eight (8) less than 90 day storage areas as follows:

Description

- Rentschler Airport - Container Storage Building
- Three 10,000 gallon underground storage tanks (CWTP-3)
- Experimental Test Area Oil House
- Main Oil House
  CWTP-5
- CWTP-6
- Roll-off Storage Area South of Maintenance Building
- Salvage Fuel Tanks in South Tank Farm

6. Stormwater Drainage

Most storm water which falls onto the site is collected and discharged into a series of catch basins and storm sewers which flow into either Willow Brook to the north or into Pewterpot Brook to the south. Both of these brooks empty into the Connecticut River which is located about one-half mile west of the main factory complex. All discharges emanating from the factory complex containing treated wastewater, industrial cooling water, and/or similar discharges are being monitored under the NPDES permit program (refer to Figure 2 on the following page for the locations of the NPDES monitoring points).

7. Plan/Policy

This document is designed to protect personnel, property, and the environment from hazards associated with accidental discharges and emergency incidents at the Pratt & Whitney (P&W) East Hartford facility. This document establishes policy and creates procedures, methods and measures, to be taken to prevent and/or contain spills, and countermeasures to minimize any adverse impact to the environment, to reduce safety and health hazards from fires, explosions or any sudden or non-sudden release of hazardous waste or hazardous waste constituents to the air, soil or surface water. This is also a plan setting standards for the acceptable management of hazardous wastes encountered in emergency incidents.

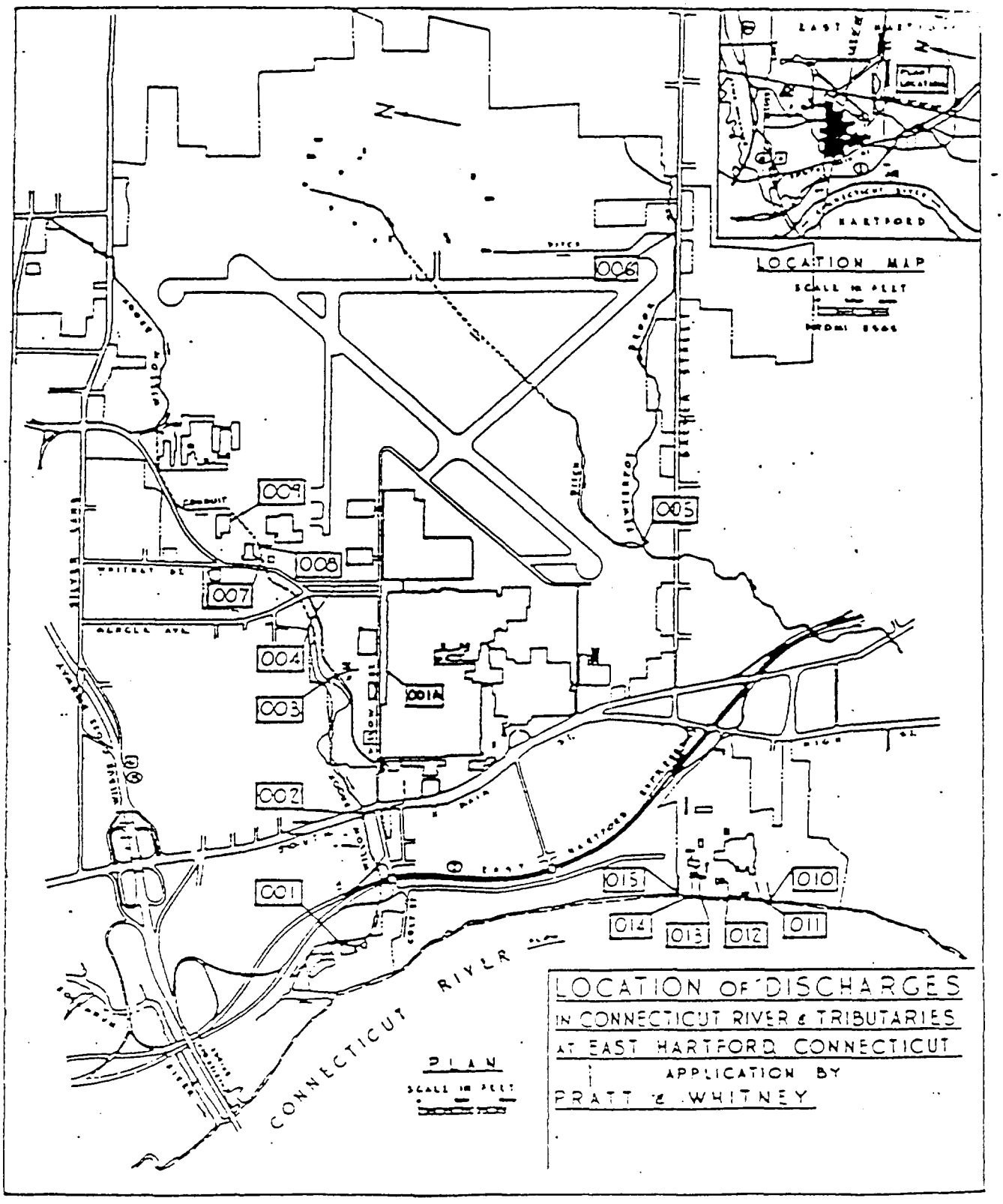
LOCATION MAP
HARTFORD
006
005
009
008
007
004
003
001A
002
001
015
010
014
013
012
011
CONNECTICUT RIVER
PLAN
LOCATION OF DISCHARGES
IN CONNECTICUT RIVER & TRIBUTARIES
AT EAST HARTFORD CONNECTICUT
APPLICATION BY
PRATT & WHITNEY

FIGURE NO. 2

This plan has been written to efficiently maximize the utilization of Pratt & Whitney's staff experience and management practices. The procedures outlined in this plan are to be carried out immediately whenever there is a fire, explosion, chemical spill, or release of hazardous waste constituents which could threaten human health or the environment.

B. EMERGENCY COORDINATORS

1. General

Pratt & Whitney's East Hartford Facility has developed an Emergency Coordinator/Emergency Response, managerial and organizational structure specific to its facility organizational structure. This Emergency Coordinator/Emergency Response organizational structure integrates the Pratt & Whitney East Hartford full time Fire Department staff Incident Commanders and the staff of the Environmental Protection Group. Within the context of this Contingency Plan the full time Fire Department staff Incident Commanders are considered Emergency Coordinators in that they are the first responders to any emergency involving hazardous wastes and coordinate any and all emergency response activities. However, they do not have the title Emergency Coordinator. The staff of the Environmental Protection Group and Waste Treatment staff have been designated Emergency Coordinators. They provide support to the Incident Commanders during a hazardous waste emergency response and implement, direct and coordinate all cleanup and follow up activities. Their duties and responsibilities are further described below.

In all instances, the first responder to a hazardous waste emergency whether it be a spill, release, fire or explosion no matter how large or incidental will be an Incident Commander of the Pratt & Whitney full time Fire Department. The Emergency Coordinator will respond to hazardous waste incidents as necessary and when contacted by the Incident Commanders as described in subsequent portions of this section.

The Emergency Coordinators and the Fire Department Incident Commanders are thoroughly familiar with all aspects of this Contingency Plan, the facilities operations and activities, the location and characteristics of waste handled, and facility records and layout. The Emergency Coordinators and the Fire Department Incident Commanders all have the authority to commit the necessary staff and emergency response equipment as required to implement this Contingency Plan. An Emergency Coordinator can be contacted day and night either by pager or telephone as described on pages B-6 to B-8. An Incident Commander is contacted by calling the Fire Dispatcher at 5-1111, 24 hrs/day.

If an emergency situation develops at the facility, the initial observer should notify the Fire Dispatcher immediately and follow the procedures outlined below, in Section D "Emergency Response Procedures" and on pages B-6 to B-8. The Fire Department Incident Commander may be assisted in emergency situations by the Emergency Coordinator, the Environmental Protection Group, the Security Force, the Medical Department, the Industrial Hygiene and Safety Group, and other staff as necessary and further described in this document.

The reporting procedures presented on pages B-6 to B-8 are included as a summary of the required notifications discussed in this document. All personnel or telephone number changes in the summary should be reported to the East Hartford Environmental Compliance Group as soon as possible so that the summary may be updated and the Contingency Plan updated and revised.

2. Duties and Responsibilities

The following section details the Duties and Responsibilities of the Fire Department Incident Commanders, Emergency Coordinators, Fire Department Dispatcher and all other departments and personnel involved in responding to an incident and/or follow up to an incident.

A. Duties of the Initial Observer

The initial observer of the spill or incident must respond as follows:

- o If possible, stop or limit the effect of an incident through timely and routine action without endangering personal safety.
- o Always notify the Fire Department immediately at 5-1111, even if the spill, fire, explosion, or other hazard seems small. Tell the Dispatcher:
  - Name of person reporting and telephone number.
  - Where the incident is located.
  - What the nature of the emergency is.
  - What material is involved (if known).
  - How much material is involved (if known).
  - What corrective action has been taken if any.
  - Whether personnel injuries are involved.
  - The direction in which the spill, vapor or release is heading.
  - Whether a fire or explosion has occurred or is imminent.

B. Duties of the Fire Department Dispatcher

The Dispatcher's job is to initiate emergency activities. The Dispatcher will:

- o Dispatch the Fire Department and Incident Commander to the scene of the incident and notify Security Headquarters to assist in area control.
- o Contact the Emergency Coordinator as listed in the Notification Procedures pages B-6 to B-8 and inform him/her of the information provided by the Initial Observer.
- o Handle all requests for assistance by the Responding Fire Officer/Incident Commander.

- o provide technical support, appropriate handling and response data and procedures, as necessary, to the Incident Commander based upon information transmitted to the Dispatcher regarding the incident and the Dispatchers review of available reference material at the dispatchers location.

- o Notify Industrial Hygiene & Safety of the location of the incident and the type of material involved so that appropriate monitoring equipment will be employed.

C. Duties of the Responding Fire Officer/Incident Commander

The Responding Fire Officer directs and coordinates emergency activities in response to a fire, explosion, spill, or other hazard. The steps to be taken can be summarized as follows:

- o Function as the emergency Incident Commander (Emergency Coordinator as defined by 40CFR265.55).

- o Evacuate any and all personnel who may be endangered by the incident. Security personnel will assist in this activity.

- o Contain the incident to LIMIT the extent of the damage and initiate appropriate remedial action, as described in Section D, within the capabilities of available trained personnel and equipment.

- o Notify the Dispatcher of the need for Medical personnel in the event of or the potential for injuries, and the need for Industrial Hygiene & Safety personnel to provide ambient air monitoring for potential harmful releases.

- o As appropriate, mobilize waste treatment personnel to the scene.

- o Identify the character, source, and extent of the fire, explosion, or release.

- o Identify and assess hazards to human health and the environment working closely with the Emergency Coordinator and Industrial Hygiene and Safety staff based on:

  - The location of the incident.

  - The nature of the emergency.

  - The material involved and amount.

  - Wind direction.

  - Injuries.

  - Potential for further damage (fire, explosion health effects, etc.)

- Assess and implement the required level of protection.
- Coordinate containment and mitigation of the release.
- Participate in post emergency assessments and preventative measures.

D. Duties of Emergency Coordinator

CONTACT THE P&W EAST HARTFORD ENVIRONMENTAL COORDINATOR OR HIS ALTERNATE AS IDENTIFIED IN THE NOTIFICATION PROCEDURES, PAGES B-6 TO B-8 IMMEDIATELY!

- Coordinate treatment and disposal activities.
- Advise the Incident Commander on technical issues, available remediation and clean-up procedures and capabilities, and on the need for outside environmental remediation assistance.
- Determine the proper spill control equipment for the specific emergency and compatibility of suppression or containment equipment/devices with the wastes or with the waste groups.
- Contact appropriate environmental remediation vendors for immediate emergency response if so directed by the Incident Commander.
- Participate in post emergency assessments and preventative measures.
- Make emergency notifications to the Connecticut Department of Environmental Protection, EPA Region I, and/or the National Response Center.
- As necessary diret the P&W Fire Department Dispatcher to notify the East Hartford Local Emergency Planning Committee (LEPC), East Hartford Fire, Police, or local medical facilities, or to initiate off-site evacuation procedures.
- Within 15 days after an incident occurs requiring the implementation of the Contingency Plan prepare and submit (6) written reports with cover letters to the verbally notified Regulatory Agencies. These reports shall follow the procedures outlined in Appendix A.

E. Duties of the P&W East Hartford Environmental Coordinator

The P&W Environmental Coordinator or his alternate will be responsible for:

- Dispatching a member or members of the Environmental Protection Group to the scene to assist the Emergency Coordinator in evaluating the extent of the damage, the potential for off-site impacts, and determining if the incident is beyond the capabilities of the Pratt & Whitney personnel to sufficiently remediate.

- Making necessary notifications to senior management.

F. Duties of the Security Force

When notified by the Pratt & Whitney Fire Department Dispatcher of the need for crowd or traffic control at a hazardous waste or material incident, the Security Communications Officer will immediately dispatch personnel to the scene to assist in maintaining order and a smooth flow of emergency personnel and equipment in and out of the area.

G. Duties of the Medical Department

When notified by the Pratt & Whitney Fire Department Dispatcher of the need for medical assistance at a hazardous waste or material incident, the ambulance and its staff will immediately respond to the scene. Medical personnel are NOT to endanger themselves by entering an area where a hazard exists. Many fire fighters are trained as Emergency Medical Technicians and will evacuate any injured persons from the hazard area before the ambulance staff will take over.

The Medical Department will notify the Manager of Environmental Protection or his alternate if it will be necessary to transport injured personnel to the area hospitals. Arrangements for transportation will be made by the Medical Department, notification of the hospitals of the type of incident will be made by the Manager of Environmental Protection.

H. Duties of Industrial Hygiene and Safety

When notified by the Pratt & Whitney Fire Department Dispatcher of the need for air monitoring at a hazardous waste or material incident, IH&S will immediately dispatch personnel to the scene to assist in monitoring the incident to ensure that if evacuation of Pratt & Whitney personnel or the population of the surrounding community becomes necessary, the P&W Manager of Environmental Protection will be informed at the earliest possible moment.

3. Summary of Notification Procedures for Hazardous Waste or Hazardous Material Incidents or Releases

The following reporting procedures are to be followed by Pratt & Whitney personnel in the event of any spill, discharge, release or emergency incident involving any petroleum product, chemical, hazardous material or waste which might be considered potentially harmful to human health or the environment.

1. Plant personnel who witness or have knowledge of any spill, discharge, release or incideent should immediately notify the Pratt & Whitney Fire Department by telephone using the emergency number:

5 - 1 1 1 1

2. The Fire Department Dispatcher will dispatch fire department personnel to the incident scene and notify the shift primary Emergency Coordinator as follows:

Time	Primary Emergency Coordinator		
Weekdays, First Shift	On call Environmental Engineer		Pager #385 or #386
Weekdays, Second Shift	J. Bull	Ext 5-3965	Pager #417
Weekdays, Third Shift	G. Jordan	Ext 5-6090	Pager #412

Time	Alternate Emergency Coordinator		
Weekdays, First Shift	R. Ives	Ext 504725	Pager #440
Weekdays, Second Shift	Contact one of the following three		
Weekdays, Third Shift	Emergency Coordinators:		
	J. Stramondo	Ext 7-4448 HM: 879-9866	Pager #384
	W. Chudzik	Ext 5-0338 HM: 649-6007	Pager #419
	T. Lorette	Ext 5-2129 HM: 537-0089	Pager #382
Weekends	Environmental Engineer		Pager #8-203-278-8794 Access Code 1054

If the primary or alternate coordinator cannot be reached contact one of the following emergency coordinators:

J. Stramondo	Ext 7-4448 HM: 879-9866	Pager #384
W. Chudzik	Ext 5-0338 HM: 649-6007	Pager #419
T. Lorette	Ext 5-2129 HM: 537-0089	Pager #382

(3) If necessary, the responding fire officer shall notify the dispatcher of the need for assistnace from:

Emergency Medical Service	Ext 5-7736
Guard Headquarters	Ext 5-6615
Industrial Hygiene & Safety	Ext 5-3440

(4) The emergency coordinator shall then notify immediately by telephone at least one preson below, listed in the calling sequence:

R.D. Rosenberg Environmental Coordinator	Ext 5-2689	HM: 646-2392
R.C. Weiss, Director, Facilities & Seravices	Ext 5-4489	HM: 295-0781

(5) The Emergency Coordinator shall provide the following information to all those notified in paragraph No. 4:

C. DESCRIPTIONS AND QUANTITIES OF HAZARDOUS WASTES

1. Compatibility

An important aspect of handling hazardous wastes is separation of incompatible wastes. Many hazardous wastes, when mixed with other wastes or materials can can produce effects which are harmful to human health and the environment, such as (1) extreme heat or pressure, (2) fire or explosion, (3) violent reaction, (4) toxic dusts, mists, or gases, or (5) flammable fumes or gases. Table 1 categorizes general waste materials which are incompatible. The mixing of material from one group in Table 1 with material from another group may have the potential consequences noted.

2. Types of Wastes and Hazard Characteristics

The hazardous wastes handled at the East Hartford facilities have all been identified and characterized in accordance with applicable regulations. The hazardous characteristics of the various wastes fall into one or more of the following categories:

Type of Hazardous Waste	EPA Hazard Code
Ignitable Waste	I
Corrosive Waste	C
Reactive Waste	R
Toxic Waste	T

Table 2 has been prepared to show the various types of waste streams, each of which may contain several different constituents having the same hazard code(s). This table presents a general description of the waste, the hazardous characteristics, the hazard code, and the materials comprising each stream so that, when the Contingency Plan is implemented, the potential hazards for each situation can be readily assessed. P&WA shall also keep the most recent inventory of wastes and other materials with the Contingency Plan and accessible at all times to response personnel.

3. Material Identification

Materials and solutions used in the P&W East Hartford facility are identified by specific control number and markings. This marking system consists of PMC, PWA & PS identification systems. PMC - Process Material Control Number; PWA - Pratt & Whitney Aircraft Number; and PS - Process Solution Number. This information is contained in a hard bound book available to all fire department personnel, Emergency Coordinators and other staff. This information is also available in the computer data base. Normally, materials are stored in specific areas of the plant. The Pratt & Whitney Fire Department and the Environmental Protection Group staff have knowledge of these identification systems and storage areas which will help in the assessment of hazards

TABLE 1

INCOMPATIBLE WASTE

Group 1-A	Group 1-B
Acetylene Sludge	Acid Sludge
Alkaline Caustic Liquids	Acid and Water
Alkaline Cleaner	Battery Acid
Alkaline Corrosive Liquids	Chemical Cleaners
Alkaline Corrosive Battery Fluid	Electrolyte, Acid
Caustic Wastewater	Etching Acid Liquid or Solvent
Lime Sludge & Corrosive Alkalies	Pickling Liquor and Corrosive Acids
Lime Wastewater	Spent Acid
Lime and Water	Spent Mixed Acid
Spent Caustic	Spent Sulfuric Acid

Potential Consequences: Heat Generation, Violent Reaction

Group 2-A	Group 2-B
Aluminum	Any Waste in Group 1-A or 1-B
Beryllium	
Calcium	
Lithium	
Magnesium	
Potassium	
Sodium	
Zinc Powder	
Other Reactive Metals & Metal Hydrides	

Potential Consequences: Fire, Explosion, Generation of Flammable Hydrogen Gas

Group 3-A	Group 3-B
Alcohols	Any Concentrated Wastes in Groups 1-A or 1-B
Water	Calcium
	Lithium
	Metal Hydrides
	Potassium
	Other Water Reactive Waste

Potential Consequences: Fire, Explosion, Heat Generation, Generation of Flammable or Toxic Gases

TABLE 1 (Cont'd)

INCOMPATIBLE WASTE

Group 4-A	Group 4-B
Alcohols	Concentrated Group 1-A or 1-B Waste
Aldehydes	Group 2-A Waste
Halogenated Hydrocarbons	
Nitrated Hydrocarbons	
Unsaturated Hydrocarbons	
Other Reactive Organic Compounds & Solvents	

Potential Consequences: Fire, Explosion, or Violent Reaction

Group 5-A	Group 5-B
Spent Cyanide & Sulfide Solutions	Group 1-B Waste

Potential Consequences: Generation of Toxic Hydrogen Cyanide or Hydrogen Sulfide Gas

Group 6-A	Group 6-B
Chlorates	Acetic Acid & Organic Acids
Chlorine	Concentrated Mineral Acids
Chlorites	Group 2-A Waste
Chromic Acids	Group 4-A Waste
Hypochlorites	Flammable & Combustible Waste
Nitrites	
Nitric Acid, Fuming	
Perchlorates	
Permanganates	
Peroxides	
Other Strong Oxidizers	

Potential Consequences: Fire, Explosion, or Violent Reaction

TABLE 2
HAZARDOUS WASTE CHARACTERISTICS

Waste Stream	EPA Designations: Characteristics	EPA Designations: Hazard Code	General Description	Contains
A	Toxic	T	Spent halogenated solvents	Tetrachloroethylene 1,1,1-Trichloroethane Trichlorotrifluoro-ethane
B	Ignitable and Toxic	I,T	Spent non-halogen-ated solvents	Acetone Benzene Methyl Ethyl Ketone Toluene Xylene
C	Corrosive	C	Non-listed waste exhibiting the characteristic of corrosivity	Acids, Alkalies
D	Reactive	R	Cyanide waste solutions; sulfur solids and alumi-num oxide powder	Sodium Cyanide Copper Cyanide Sulfur Solid Aluminum Oxide
E	Toxic	T	Wastewater treat-ment plant sludge from electroplating operations	Metal Hydroxides
F	Ignitable	I	Discarded nitric acid solutions greater than 40%	Nitric Acid
G.	Miscellaneous Corrosive, Ignitable, and Toxic	I,T,C	Discarded or spilled chemical products	Acids, Alkalies Solvents, Oxidizers

Hazard Code Key

I - Ignitability (Solvents)
- Liquid with a flash point below 60°C (140°F)

C - Corrosivity (Acids, Alkalies)
- Aqueous material with pH less than or equal to 2 or greater than or equal to 12.5

R - Reactivity (Cyanide bearing wastes)
- Cyanide or sulfide wastes which, when exposed to pH conditions between 2 and 12.5, can generate toxic gasses, vapors, or fumes.

T - Toxicity (Acids, Organics, Solvents, etc.)
- These categories include a wide variety of organics and inorganic materials toxic to man by either short-term or long-term exposure as listed in federal regulations; a limited number of such wastes are generated at Pratt & Whitney.

The Fire Department Dispatcher, in addition to having the PMC, PWA & PS reference manuals and this document has trade name cross-reference manuals, Chris Manuals, the Full NFPA and F.M. Data Code Sheets, as well as an extensive library of other reference materials.

All tanks and containers used for storage of hazardous waste are clearly marked and labeled. The markings and labels provide information which may be used to obtain additional detailed information regarding the constituents present in the waste. In addition, wastes are typically stored in specific areas of the site as discussed previously.

Appendix B contains a consolidated list of covered substances. This list indicates reportable quantities, whether the substance is an Extremely Hazardous Substance, whether it is Toxic, and whether it is a CERCLA substance.

D. EMERGENCY RESPONSE PROCEDURES

1. Implementation

The decision to initiate an emergency response, "Notification of the Fire Department Dispatcher", is made by the "Initial Observer" upon immediate awareness of a spill, release, fire or explosion, regardless of how small or large. The "Initial Observer" provides the Dispatcher with the information called for in Section B.2.A, Page B-2 "Duties and Responsibilities of the Initial Observer" and this section

The Fire Department dispatcher will immediately dispatch an Incident Commander. Upon arriving at the scene, the Incident Commander immediately assesses the situation and makes the decision to what extent emergency response should be implemented based upon the criteria provided in this section.

The Fire Department Incident Commander has the authority to commit the resources required to carry out emergency hazardous waste response and implement the Contingency Plan. All personnel involved in hazardous waste management, identified as a participant in the implementation of the Contingency Plan, as well as key management personnel have been provided with copies of the Contingency Plan as well as training in the implementation of the Contingency Plan.

The Incident Commander may implement the Contingency Plan if the following conditions exist:

- Fire
- Explosion
- Imminent danger of a fire and/or Explosion involving hazardous wastes resulting in the;
    - igniting of hazardous waste
    - release of toxic material
- A spill that could result in release of flammable liquids or vapors, thus causing a fire and explosion hazard.
- Spills that could cause the release of toxic liquids or fumes and harm employees.
- Spills involving wastes or other materials with a Health Hazard Degree of 3, regardless of size

- A spill that can be contained on site, but the potential exists for ground water contamination.

- A spill that cannot be contained on site, resulting in off-site soil contamination and/or ground or surface water pollution.

- A major spill or material release.

The quantity of a release that may trigger implementation of the Contingency Plan is developed based on the reportable quantities of hazardous wastes listed in 40 CFR 302.4.

For purposes of complying with the notification requirements of Section 103(a) of the Comprehensive Environmental Response, Compensation, and Liability Act of 1980, the reportable quantities (RQ) contained in 40 CFR 302.4 will be utilized.

Other factors that are considered prior to the implementation of emergency procedures are:

- Past experience
- Specific process operation
- Location
- Inherent danger of release
- Ability to contain and mitigate
- Minimize hazards to human health and the environment

Once the Incident Commander has determined that an emergency situation exists, warranting full implementation of the Contingency Plan, the Fire Department Dispatcher will become the communications center handling all requests for assistance and notification. As necessary and when appropriate Pratt & Whitney's Mobile Incident Command Center will be brought to the scene. This center has full multi-line telephone communication capabilities and multi-channel two-way radio communication capabilities.

A. Notification Procedures

Upon notification of the Pratt & Whitney Fire Department Dispatcher, by an employee, of a spill release and/or an imminent or actual hazardous waste related emergency situation, fire or explosion, an Incident Commander will be dispatched immediately to the scene. Upon arriving on the scene of the hazardous waste spill, release or related emergency, the Incident Commander will assess the situation; he will don the appropriate personal protective equipment; and he will institute the appropriate containment and response procedures as defined elsewhere in this section.

He will, as necessary, call in additional Pratt & Whitney Fire Department personnel and Waste Treatment personnel to provide assistance and, as necessary, any additional staff resources from the departments and divisions identified in Section B.

The security staff will keep unnecessary and unauthorized personnel clear of the hazardous waste spill, release or emergency. The Incident Commander will review the affected areas operations with the area supervisor and shutdown or reduce the level of the operations if necessary. If necessary the area will be evacuated. Facility operations not affected will continue as normal.

In the affected area, the security staff is responsible for checking the safety and accountability of all personnel. Any injured or missing employees shall be reported to the Medical Department, Emergency Coordinator, and Environmental Coordinator for appropriate action.

The Pratt & Whitney Fire Department Fire Chief will be in charge of communications or designate the Incident Commander to take charge. Facility personnel, East Hartford Fire and Police Departments, will be notified after the Pratt & Whitney Fire Chief gives approval. Pages B-6 to B-8 contain the names and telephone numbers of the internal and external contacts, that the facility will notify if necessary.

The Emergency Coordinator is responsible for notifying appropriate federal and state agencies remediation vendors if their help is needed. The Emergency Coordinator will coordinate with the Environmental Coordinator all clean-up activities.

If the Incident Commander determines that there is a threat to human health or the environment, he will immediately notify the Pratt & Whitney Fire Department Dispatcher to notify the Pratt & Whitney Security Force, the area supervisor, the Emergency Coordinator and Manager of Environmental Protection. The Security Force will evacuate the area. If the Incident Commander determines that there exists a threat to neighboring properties and the evacuation of the areas outside of the facility boundary may be required, he will relay this information to the Pratt & Whitney Fire Chief. The Pratt & Whitney Fire Department Dispatcher will then notify the East Hartford Fire Department Emergency Dispatcher. Decisions to notify abutting properties will be made by the Chief of the East Hartford Fire Department. The National Response Center will also be notified by the Emergency Coordinator.

The National Response Center is provided with the following information:

- The name and telephone number of the reporter
- The name and address of the facility
- The time and type of incident
- The name and quantity of material(s) involved, to the extent known

- The extent of injuries, if any
- The possible hazards to human health, or the environment, outside the facility.
- Containment and removal efforts.

All regulatory agencies notified verbally of a spill or release will receive a written follow-up report. The report format for a "Report of Spill Event" is contained in Appendix A of this document. The Emergency Coordinator will be responsible for these notifications and report preparation.

B. Identification of Hazardous Materials

The Incident Commander, immediately identifies pertinent information about the hazardous waste spill and/or release (i.e., character, source, amount, extent, etc.). This identification involves visual analysis and investigating the location and nature of the spill.

The most likely types of hazardous waste spills that could occur at Pratt & Whitney, are: solid hazardous waste spills, liquid hazardous waste spills, and raw materials or product spills. The Incident Commander has knowledge of the hazardous wastes and materials used at the various locations within the facility, and has access to the hazardous chemicals reference list (Appendix B), Pratt & Whitney marking and labeling identification systems, and other resources which readily aid him in a quick and accurate identification of the waste involved and the associated hazards.

C. Hazard Assessment

Possible direct and/or indirect hazards to human health and/or the environment are assessed by the Incident Commander with assistance, as necessary, from the Emergency Coordinator and/or Environmental Protection Department staff members.

The Incident Commander assesses the situation for possible hazards to human health and/or the environment in a number of ways. He may evaluate the likelihood of a fire or explosion by checking possible sources nearby and/or of the operations in the area. He may identify the composition of a spill or accidental release of material by the nature and location of the spill (release). He may also rely on other methods that utilize available materials, consultation with the Environmental Protection Groups, common sense, his experience, and review of MSDSs for the specific chemicals. The Incident Commander's assessment criteria are based upon his training and experience, his knowledge of the operations and activities, the raw products, the wastes, the associated hazards, and the seriousness of the type of incident and consultation with the Emergency Coordinator and Industrial Hygiene and Safety staff.

Past experience and knowledge of the facility shows that there is little or no potential for an adverse impact on persons or property outside this facility in the event of a hazardous waste spill or

release. This is because of the size of the facility and the quantities of hazardous materials handled are controlled. The off-site adverse impact to adjacent properties in the event of a fire or explosion involving ignitable hazardous wastes, is also minimal. Again because of the size of the facility and the response capabilities of the P&W fire protection system and Fire Department.

Should the Incident Commander determine that a threat to human health or the environment does exist, he follows and institutes the notification procedures described in Section B and above.

2. General Hazardous Waste Response Procedures

The following responses are required for any type of incident involving hazardous wastes with a potential threat to persons or the environment, whether due to fire, explosion, spills, or other releases. Immediate action by the first observer to minimize the potential for harmful effects must be followed by timely and proper notifications.

The initial response to any emergency shall be to protect human health and preserve safety. Consequently, the initial observer shall not take undue risks with his or her own personal safety in attempts to limit a release to the environment.

An immediate secondary response shall be to limit damage to the environment. This includes operation of secondary containment facilities and spill countermeasure procedures.

A third priority is clean-up, treatment, and disposal of spilled material. These responses shall be made after the Incident Commander and Emergency Coordinator have identified and assessed the hazards.

A. Response Procedure for Fire and/or Explosion Involving Hazardous Waste

If a fire or explosion involving hazardous waste occurs, the procedures described below should be followed for rapid and safe response and control of the situation.

The initial observer of a fire or explosion contacts the Pratt & Whitney Fire Department Dispatcher, EXTENSION 5-1111, at the earliest possible moment and provides the Dispatcher with the following information:

- Name of person reporting and telephone number.
- Where the incident is located.
- What the nature of the emergency is.
- What material is involved (if known).

- How much material is involved (if known).
- What corrective action has been taken if any.
- Whether personnel injuries are involved.
- Whether a spill or release has occurred or is threatening to occur.

In addition if a fire or explosion has occurred, the following response actions are initiated:

a. The fire alarm shall be sounded.

b. The building shall be evacuated in accordance with the evacuation plan presented in Appendix C.

c. If possible without risk of personal injury, fire extinguishers shall be used to fight fires until the fire department arrives.

The Pratt & Whitney Fire Department Incident Commander and/or Fire Chief then assess the character, exact source, amount, and extent of hazard associated with the fire or explosion. The appropriate P&W internal departments, management and authorities are notified as described in Section B. Outside emergency response agencies will be contacted as necessary and as appropriate by the Fire Chief or Emergency Coordinator as outlined in Section B.

The Incident Commander will choose the fire extinguishing equipment to be used in consultation with the Emergency Coordinator and Industrial Hygiene and Safety. Fire fighting procedures will be directed at the scene by the Pratt and Whitney Fire Department under the direction of the responding Incident Commander and/or the P&W Fire Chief.

The Incident Commander in consultation with the Emergency Coordinator and Industrial Hygiene and Safety will determine the appropriate personnel protection and safety equipment to be utilized. The selection of Emergency Response equipment is based upon the incident, past experience and knowledge of the specific operation.

Action to prevent the recurrence or spread of fires/explosions or releases shall include stopping processes and operations, collecting and containing released wastes, temporarily cleaning the area using sand or inert materials, covering all manholes and/or storm drains, and recovering or isolating containers.

Fire fighting equipment and vehicles can easily reach all buildings and hazardous waste storage areas at the facility. Asphalt surfaced roads allow for easy access to all areas.

The Pratt & Whitney full time Fire Department will fight all fires and respond to all explosions with its full complement of fire-fighting equipment. The East Hartford Fire Department, when contacted by the P&W Fire Chief, will respond to the scene as directed and will provide support and assistance as needed under the direction of the P&W Fire Chief.

Existing fire equipment, fire hoses and fire hydrants located throughout the site are maintained and inspected regularly. Many of the structures on-site, including the Centralized Waste Storage and Transfer Facility, have automatic sprinkler systems for immediate response to fire.

The Incident Commander has available to him explosive and oxygen meters, the Aims 300 gas analyzer, Drager tubes, etc.

B. Response Procedures for Spills or Releases of Hazardous Wastes

In the event of a release of hazardous waste to the environment, the following procedures should be implemented for rapid and safe response to contain, limit, and clean up the spill.

The Fire Department Dispatcher, EXTENSION 5-1111 shall be contacted to activate the Emergency Reporting Procedure as soon as possible. In addition, all actions taken to contain, limit, and clean up a spill shall be undertaken with care and good judgement to avoid risk or injury to personnel and minimize the impact on the environment.

Provide the Dispatcher with the following information:

- Name of person reporting and telephone number.
- Where the incident is located.
- What the nature of the emergency is.
- What material is involved (if known).
- How much material is involved (if known).
- What corrective action has been taken if any.
- Whether personnel injuries are involved.
- The direction in which the spill, vapor, or release is heading.
- Whether a fire or explosion has occurred or is imminent.

The Incident Commander then assesses the character, exact source, amount, and extent of any released materials or chemical spill. The Incident Commander in consultation with the Emergency Coordinator and Industrial Hygiene and Safety selects the appropriate personal protective safety gear and equipment.

The Incident Commander takes all reasonable measures to prevent a spill or other release of hazardous materials from spreading to other areas. A variety of containment measures equipment and staff resources are available at the facility. The one(s) chosen depends on the nature of the release. Specific procedures for releases that would occur are as follows:

a. Acids

(1) Eliminate source of spill if possible, without risk.

(2) Dike spill area with sodium bicarbonate and cover all manholes and storm drains in the area.

(3) Remove incompatible materials.

(4) Remove objects in spill area that have not yet been contacted.

(5) Soak up spilled material with sodium bicarbonate and remove for treatment or storage.

(6) After all sodium bicarbonate has been removed, rinse spill area with water collecting rinsewater for disposal.

b. Alkalies

(1) Solid Material (Including Industrial Wastewater Treatment Plant Sludge)

- Eliminate source of spill if possible, without risk.
- Pick up spilled material and remove for treatment.
- Rinse spill area and any contacted objects with water, collecting rinswater for disposal.

(2) Liquid Material

- Eliminate source of spill if possible, without risk.
- Dike spill area with soda ash and cover all manholes and storm drains in the area.
- Remove incompatible materials.

- Remove objects which have not been contacted.
- Soak up spill with soda ash and remove for treatment or storage.
- After removing soda ash, rinse spill area with water collecting rinsewater for disposal.

c. Cyanides

CAUTION: Contact with acids will cause cyanide salts or their solutions to generate hydrogen cyanide gas which is extremely toxic and flammable.

Hydrogen cyanide gas can cause instantaneous loss of consciousness and death.

(1) Eliminate source of spill if possible, without risk.

(2) Dike spill area with soda ash and cover manholes and storm drains in the area.

(3) Remove incompatible materials.

(4) Remove objects in spill area that have not yet been contacted.

(5) Soak up spilled material with soda ash and remove for treatment. If solution is too strong for in-plant treatment, place in cyanide storage tank. Be sure all contacted material is removed for treatment.

d. Wax/Solvent, Oil/Solvent, Solvents, Paints

(1) Eliminate source of spill if possible, without risk.

(2) Remove sources of ignition.

(3) Dike spill area with sawdust and dike or cover all manholes and storm drains in the area.

(4) Remove incompatible materials.

(5) Remove objects in spill area that have not been contacted.

(6) Soak up spilled material with sawdust. Remove for off-site disposal.

e. Container Spills and Leaks

Hazardous waste containers are stored in the Centralized Waste Storage and Transfer Facility (CWS&TF) and in five of the six (6) less than 90 storage areas identified in Section A.5. The area designated, CWTP-3, consists of three underground storage tanks. No containers are stored in this location.

All hazardous waste containers in these areas are inspected for corrosion, structural defects, and leakage. If a container holding hazardous waste is not in good condition or if it shows signs of beginning to leak, steps will be taken to orient the contai r so as to minimize the potential for leakage, after which the hazardous waste will either be transferred to a container in good condition, or the container will be recontainerized in an overpack.

If the leaking container is a drum, (all drums containing hazardous waste are stored in the CWS&TF and are palletized) a fork lift truck will remove any drums preventing access to the leaking drum . The leaking drum will then be transferred by fork lift to the staging area to allow for the safe transfer of the contents of the leaking drum to another drum or to allow the drum to be overpacked.

At a minimum, Level D personal protective equipment will be used for these procedures.

f. Notification/Coordination

The procedures for notifying key plant officials, other departments (i.e. Security, Industrial Health, etc.) regulatory agencies and remediation vendors are described in Section B.

g. Cleanup

Following the above described containment and countermeasures should ensure a quick cleanup that minimizes the impact upon human health and the environment. After responding to the emergency and prior to resuming operations in the affected area, the following cleanup inspection procedures should be implemented:

- remove all wastes, equipment and cleanup containers from the area
- inspect the area for the presence of visible residue
- remove any remaining residue with absorbents if necessary
- wash the area with a suitable cleaner

Type of Hazardous Waste	Perferred Cleaning Solution
Inorganic acids, metal processing wastes	Sodium bicarbonate solution
Oily, greasy, unspecified wastes	Solution capable of dissolving organics
Inorganic bases, alkali, and caustic waste	Dilute acidic solution
Pesticides, fungicides, chlorinated phenols	Hypochlorite solution

Cyanides, and other non-acidic inorganic wastes	Hypochlorite solution
Solvents and organic compounds	Solution capable of dissolving organics and a sodium bicarbonate solution
Heavy metals	Sodium bicarbonate solution

- place all debris and wastes in DOT 17H - 55 gallon drums; separate drums if appropriate
- evaluate and characterize the cleaned up debris and waste based on the raw products used and/or wastes generated at the location
- store and dispose of contaminated debris and waste according to the type of wastes
- inspect the area

3. Evacuation Plan

In the event of a sudden and uncontrollable occurrence such as fire, explosion, or major uncontrollable chemical spill, and if degree of risk precludes making an effort to stop or diminish the effects of the occurrence, the area of the occurrence should be evacuated immediately and in an orderly and efficient manner. An evacuation plan for the waste treatment areas at the East Hartford manufacturing facility is presented in Appendix C. This plan describes how evacuation will be initiated, how employees may exit from plant buildings, and where employees should assemble following evacuation.

4. Post-Emergency Actions

Immediately after an emergency, the Emergency Coordinator shall make arrangements for treatment, storage, or disposal of recovered hazardous waste or any other contaminated material.

For hazardous waste incidents, the emergency coordinator must ensure that in the affected area(s) of the facility:

a. No waste that may be incompatible with the released material is treated, stored, or disposed of until cleanup procedures are completed.

b. All emergency equipment is cleaned and fit for its intended use before operations are resumed.

The EPA Regional Administrator, the Commissioner of the CT DEP and appropriate local authorities must be notified that the facility is in compliance with (a) and (b) before operations are resumed. Details of the incident must be recorded in the facility operating record.

5. Post-Emergency Equipment Maintenance

After an emergency, all emergency equipment utilized and potentially exposed to contamination (listed in Section E and Appendix D) is cleaned, decontaminated and deemed ready for its intended use. Depleted stocks of neutralizing/absorbing materials are replenished, protective clothing cleaned and/or replaced, etc. Any wastes generated as a result of decontamination of emergency equipment will be managed as described herein and in accordance with the Waste Analysis Plan for the East Hartford Facility.

E. EMERGENCY EQUIPMENT

1. General

Emergency equipment and resources for response to fires, explosions or any release of hazardous waste which could threaten human health or the environment is provided at strategic locations at the East Hartford plant. Generally, this equipment may be divided into the following categories:

- Security systems and communications
- Fire fighting resources
- Personnel protection equipmnet
- Spill control equipment

Descriptions of emergency equipment and resources are presented in the following paragraphs as well as a brief discussion of emergency equipment testing and maintenance procedures.

2. Security System and Communications

The Pratt & Whitney facility in East Hartford supports a full-time security force. Security at the plant is maintained on a 24-hour per day, seven-day per week basis by the company's own plant protection department. The property and the company's facilities are completely enclosed with six-foot high, steel mesh fence, and all entrance gates are either locked or manned by a plant security guard. During off shifts and weekends when the plant is not operating, the gates are locked and the security guard has a watchman clock that must be punched hourly.

Communication at the plant during emergencies may be established by telephone, the public address system or two-way radios. The public address system provides coverage to the entire facility. Telephones are located throughout the facility as well. Many Fire Department personnel, Emergency Coordinators and Waste Treatment personnel are provided with two-way radios. Locations of communication equipment in the CWS&TF units and the less than 90 day storage areas are presented in Appendix D.

3. Fire Fighting Resources

The Pratt & Whitney facility in East Hartford supports a full-time fire department. The fire department coverage is on a 24 hr/day, 7 day/week basis. In addition, Pratt & Whitney maintains numerous specialized fire and security vehicles for use inside and outside the facility.

Fire fighting equipment located throughout the facility includes sprinklers, fire hydrants, hose houses, and fire extinguishers. The locations and types of fire fighting equipment at the plant are listed

in Appendix D and maps showing their locations are presented in Appendix E and on Figure 4. The P&W Fire Department personnel are intimately familiar with all equipment and locations.

4. Personnel Protection Equipment and Resources

The Pratt & Whitney facility in East Hartford supports a full-time medical staff. Medical staff coverage is on a 24 hour per day, 5 day per week basis with weekend coverage whenever overtime population warrants. One ambulance and a number of specialized emergency vehicles are maintained at the plant for use in medical emergencies.

Personnel protection equipment available throughout the plant to prevent medical emergencies includes the following:

- full protective clothing including face shields, boots, aprons, and gloves
- respirators
- Scott air paks
- emergency showers
- eye wash stations
- personal protection equipment

Locations of personnel protection equipment at the East Hartford plant are listed in Appendix D and maps identifying these locations shown on Figure 4.

5. Spill Control Equipment

Emergency response and Spill control equipment at the East Hartford plant includes the following:

- shovels and rakes
- brooms
- Speedi-Dri
- barrels
- hoses
- wet vacuums
- portable transport tanks
- emergency pumps
- sawdust
- sodium bicarbonate
- oil spill containment cart

A listing of the locations of this equipment at the plant is presented in Appendix D and maps identifying these locations are shown in Appendix E and on Figure 4.

In addition Pratt & Whitney has a mobile van outfitted with hazardous materials response equipment. A listing of the van's equipment is presented in Appendix D. This van is located at Fire Headquarters.

6. Emergency Equipment Testing and Maintenance

All fire/safety equipment is routinely inspected and maintained by the Pratt & Whitney Fire Department according to the National Fire Protection Codes. Equipment includes fire extinguishers and Scott Air Paks which are recharged immediately after use. Records of compliance with the codes are kept by the Fire Department.

As a matter of practice, the other emergency equipment is always replaced after it is used. All materials that are used in emergencies are available at nearby Plant Engineering cribs.

7. Less Than 90 Day Storage Areas

There are several less than 90 day hazardous waste storage areas at the East Hartford Facility. The locations of these areas are identified on the map presented as Figure 5. A description of each location follows:

Location No.	Description
1	Rentschler Airport - Container Storage Building
2	Three 10,000 gallon underground storage tanks (CWTP-3).
3	Experimental Test Area Oil House
4	Main Oil House
5a&b	CWTP-5
6	CWTP-6
7	Roll-Off Storage Area South of Maintenance Building
8	Salvage Fuel Tanks in South Tank Farm

The type of waste streams handled at each location are as follows:

Location No.	Description
1	Hazardous and non-hazardous waste oils, waste jet fuels, waste solvents.
2	F002, D001, U228, U220 - waste oils
3	Waste Oils and Solvents
4	Waste Oils and Solvents, Bulk Solids from Remediation
5a	All waste types except ignitibles in containers
5b	Equipment decontamination solutions in tanks
6	All waste types except ignitibles in containers
7	Soils and debris contaminated with hazardous and non-hazardous waste
8	Waste jet fuels and solvents

The following safety and emergency response equipment will be located near-by each of the less than 90 day storage areas. This equipment will be inspected weekly to ensure that it is maintained in good working condition:

A) Spill Control Equipment

1) Shovels, Rakes, and Brooms
2) Barrels
3) Sawdust and Absorbent Material

B) Communication Equipment

1) Telephone

C) Fire Extinguishing Equipment

1) 6 lb. ABC

D) Personnel Safety Equipment

1) Full protective clothing, face shield, boots, aprons, gloves

2) Eye Wash Station

F. Incident Reporting Requirements

Within 15 days after the occurrence of an incident requiring the implementation of this Contingency Plan a written report in accordance with the reporting requirements and format described in Appendix A will be prepared and submitted to the EPA Regional Administrator and Commissioner of DEP as well as any other agencies verbally notified of the incident. These reports will be prepared by the Emergency Coordinator and will include:

- Name, address and telephone number of the owner or operator
- Name, address and telephon e number of the facility
- Date, time and type of incident
- The extent of injuries, if any
- An assessment of actual or potential hazards to human health or the environment
- Estimated quantity and disposition of recovered material that resulted from the incident.

G. COORDINATION AGREEMENTS

Pratt & Whitney has been a member of the community of East Hartford, Connecticut for over 60 years, and throughout that time there has been a verbal reciprocal arrangement between Pratt & Whitney and the Town of East Hartford to respond with security, fire or medical personnel and equipment whenever either might request assistance.

Formal arrangements have been made as necessary to familiarize police, fire departments, and emergency response teams with the layout of the facility, properties of hazardous wastes handled, entrances and roads inside the facility, normal working places and possible evacuation routes. The Contingency Plan has been distributed to the following agencies:

Town of East Hartford Police Department
Town of East Hartford Fire Department
Hartford Hospital
East Hartford Local Emergency Planning Committee

H. AMENDMENT AND DISTRIBUTION OF THE PLANS

1. Contingency Plan

This document will be reviewed and immediately amended, if necessary, whenever:

(a) Applicable regulations are revised.

(b) The plan fails in an emergency

(c) The facility changes in its design, construction, operation, maintenance or other circumstances in a way that materially increases the potential for fires, explosions, or releases of hazardous waste or hazardous waste constituents, or changes the response necessary in any emergency.

(d) The list of emergency coordinators telephone numbers and/or address changes.

(e) The list of emergency equipment changes.

Amendments will be distributed to all personnel who receive this plan.

APPENDIX A

Federal, State and Local Agency Notification Requirements

This exhibit contains a summary of the verbal and written notifications which must be made to federal, state and local agencies in the event of a release. It is divided into the following Sections:

(1) Any Release/Incident
(2) Hazardous Waste Release/Incident
(3) CERCLA and/or EHS Release

Part (a) of each section contains verbal notification requirements and part (b) of each section contains written notification requirements.

It should be noted that Section (1) must be followed any time there is a release or incident involving, chemicals, waste, etc., while Sections (2) & (3) must be reviewed independently for applicability. If applicable, the requirements of Sections (2) & (3) must be completed in addition to the requirements of Section (1).

For further information or clarification of the reporting requirements, see the regulation referenced at the end of each section.

(1) ANY RELEASE/INCIDENT

a) Any incident involving the discharge, spillage, uncontrolled loss or seepage of any, chemical product (solid, liquid or gas) or hazardous waste must be reported immediately to:

The Department of Environmental Protection at 203-566-3338 (This number is answered by the Connecticut State Police at times other than normal business hours).

b) As soon as practical after an incident, a written report documenting the nature of the incident shall be completed by the Environmental Protection Group, reviewed by Division Counsel, and forwarded to:

The Department of Environmental Protection
Waste Management Bureau
Oil and Chemical Spill Section
165 Capitol Avenue
Hartford, CT 06106

The form at the end of this exhibit may be used to make this report.

REFERENCE: CT Clean Water Act 22a-450

(2) HAZARDOUS WASTE RELEASE/INCIDENT

a) In addition to the notifications made under (1), any spill or release of a hazardous waste which exceeds the reportable quantity (RQ) for that waste must be reported immediately to:

The National Response Center at 800-424-8802

Hazardous wastes on the CERCLA list have the RQ's given on the list. (A combined CERCLA and EHS list with RQ's is available in the Environmental Protection Group.) All other hazardous wastes not on the CERCLA list have RQ's of 100 pounds, except for wastes which exhibit the characteristic of toxicity. Toxic wastes have the RQ's listed on the CERCLA table for the contaminant on which the characteristic of EP toxicity is based. The RQ applies to the waste itself, not merely to the toxic contaminant. (If more than one RQ applies, always use the lowest.)

If the emergency coordinator determines that the facility has had a release, fire or explosion that could threaten human health or the environment outside the facility, this should also be reported immediately to:

East Hartford Local Emergency Planning Committee
at 203-289-2781

b) Within 15 days after the incident requiring implementation of the Contingency Plan, a written report on the incident must be submitted to the EPA Regional Administrator and the Commissioner of the DEP. The report must include:

- Name, address and telephone number of the owner or operator
- Name, address and telephone number of the facility
- Date, time and type of incident
- The extent of injuries, if any
- An assessment of actual or potential hazards to human health or the environment
- Estimated quantity and disposition of recovered material that resulted from the incident.

REFERENCES: CERCLA - 40 CFR Part 302
Federal Hazardous Waste Regs. - 40 CFR Part 264 Subpart D
Connecticut Hazardous Waste Regs. - 22a-449(c)-26

(3) CERCLA AND/OR EHS RELEASE

a) In addition to the notifications made under (1), any release of a substance that is a CERCLA hazardous substance and/or an extremely hazardous substance (EHS) that exceeds the reportable quantity (RQ) for that substance must be reported immediately as follows:

(i) CERCLA and EHS

- Notify the National Response Center at 800-424-8802

- If the release poses a risk of exposure beyond the facility boundary, notify the State Emergency Response Commission at 203-566-4633 and the East Hartford Local Emergency Planning Committee at 203-289-2781

(ii) CERCLA Only

Same as (i) above

(iii) EHS Only

If the release poses a risk of exposure beyond the facility boundary, notify the State Emergency Response Commission at 203-566-4633 and the East Hartford Local Emergency Planning Committee at 203-289-2781

A combined CERCLA and EHS list with RQ's is available in the Environmental Protection Group (see attached list).

b) As soon as practicable after a release which required notification of the State Emergency Response Commission and the Local Emergency Planning Committee, a written follow-up notice must be sent to both groups. The written notice must contain:

- Facility name and location
- Name of chemical or substance involved in release
- Indication of whether the substance is an EHS
- Estimate of the quantity released to the environment
- Time and duration of the release
- Medium or media into which the release occurred
- Any known or anticipated acute or chronic health risks associated with the release
- Precautions taken as a result of the release including evacuation
- Actions taken to contain the release
- Where appropriate, advice regarding medical attention necessary for exposed individuals

REFERENCES: CERCLA - 40 CFR Part 302
Emergency Planning and Notification - 40 CFR Part 355

STATE OF CONNECTICUT
DEPARTMENT OF ENVIRONMENTAL PROTECTION
State Office Building Hartford, Connecticut 06106

REPORT OF PETROLEUM OR CHEMICAL PRODUCT
DISCHARGE, SPILLAGE, SEEPAGE, FILTRATION

The following information is submitted concerning petroleum or chemical product discharge reported verbally to the Department of Environmental Protection/State Police at _____

on _____ at _____ by _____
(date) (time) (name)

1. Time and date of discharge, spillage, etc.

   _____

2. Location, to include name of town, river, highway, distance from intersection, etc. of the pollution or contamination.

   _____

   _____

3. Type of oil, petroleum or chemical pollutant or contaminant.

   _____

4. Quantity of discharge, spillage, seepage, filtration.

   _____

5. Cause of pollution or contamination:

   a. Type of vessel, vehicle, containers, etc., which contained the pollutant or contaminant _____

      _____

   b. Describe in detail what actually occurred to cause discharge, spillage, seepage, filtration.

      _____

      _____

c. If pollutant of contamination was a result of discharge, spillage, seepage, filtration from a moving vessel or vehicle, give location of departure and destination.

_____

_____

_____

6. Name and address of owner of ship, boat or other vessel, terminal, establishment, vehicle, trailer or machine causing such pollution or contamination.

_____

_____

_____

7. Name and address of person making this report.

_____

8. Title, or relationship to owner, of person making report.

_____

All statements contained herein are true to the best of my knowledge.

_____
Signature of Person Making Report

DEPT. OF ENVIRONMENTAL PROTECTION
HAZARDOUS MATERIALS MANAGEMENT UNIT
OIL & CHEMICAL SPILLS SECTION
STATE OFFICE BUILDING
HARTFORD, CONNECTICUT 06106

APPENDIX B

Consolidated Chemical List
of
Covered Substances

Consolidated Chemical List
(Alphabetical Listing)

CAS or Other I.D. No.	CHEMICAL NAME		RQ	TPQ	EHS	OSH	TOXIC	CERCLA	NOTES
K043	–	2,6-DICHLOROPHENOL WASTE FROM 2,4-D PROD.	10	–	–	–	–	•	†
K064	–	ACID PLANT BLOWDOWN SLURRY/SLUDGE FROM PRIMARY COPPER PRODUCTION	1	–	–	–	–	•	†
K060	–	AMMONIA STILL LIME SLUDGE FROM COKING OPERATIONS	1	–	–	–	–	•	†
K051	–	API SEPARATOR SLUDGE FR. PETROLEUM REFINING INDUSTRY	1	–	–	–	–	•	†
K021	–	AQUEOUS SPENT ANTIMONY CATALYST WASTE FR. FLUOROMETHANES PROD.	10	–	–	–	–	•	†
K013	–	BOTTOM STREAM FROM ACETONITRILE COLUMN IN PRODUCTION OF ACRYLONITRILE	10	–	–	–	–	•	†
K011	–	BOTTOM STREAM FROM WASTEWATER STRIPPER IN PRODUCTION OF ACRYLONITRILE	10	–	–	–	–	•	†
K014	–	BOTTOMS FROM ACETONITRILE PURIF. COLUMN IN PROD. OF ACRYLONITRILE	5000	–	–	–	–	•	†
K071	–	BRINE PURIF. MUDS FR. MERCURY CELL PROCESS IN CHLORINE PROD. EXCEPT...	1	–	–	–	–	•	†
K031	–	BY-PRODUCT SALTS GENERATED IN PROD. OF MSMA AND CACODYLIC ACID	1	–	–	–	–	•	†
K027	–	CENTRIFUGE AND DISTILLATION RESIDUES FR. TOLUENE DIISOCYANATE PROD.	10	–	–	–	–	•	†
K073	–	CHLORINATED HYDROCARBON WASTE FR. PURIF. STEP OF ... IN CHLORINE PROD	10	–	–	–	–	•	†
K107	–	COLUMN BOTTOMS FROM PRODUCT SEPARATION FROM THE PROD. OF 1,1-DIMETHYLHYDRAZINE (UDMH) FR. CARBOXYLIC ACID HYDRAZINES	10	–	–	–	–	•	†
K030	–	COLUMN BOTTOMS/HEAVY ENDS FR. COMBO PROD. TRI- AND PER-CHLOROETHYLENE	1	–	–	–	–	•	†
K104	–	COMBINED WASTEWATER STREAMS GEN. NITROBENZENE/ANILINE CHLOROBENZINES	10	–	–	–	–	•	†
K108	–	CONDENSED COLUMN OVERHEADS FR. PRODUCT SEPARATION AND CONDENSED REACTOR VENT GASES FR. PROD. OF 1,1-DIMETHLHYDRAZINE (UDMH) FR. CARBOXYLIC HYDRAZINES	10	–	–	–	–	•	†
K110	–	CONDENSED COLUMN OVERHEADS FR. INTERMEDIATE SEPARATION FR. PROD. OF 1,1-DIMETHYLHYDRAZINE (UDMH) FR. CARBOXYLIC HYDRAZINES	10	–	–	–	–	•	†
F025	–	CONDENSED LIGHT ENDS, SPENT FILTERS AND FILTER AIDS, AND SPENT DESICCANT WASTES FR. PROD. OF CERTAIN CHLORINATED ALIPHATIC HYDROCARBONS BY FREE RADICAL CATALYZED PROCESSES	1	–	–	–	–	•	†
K113	–	CONDENSED LIQUID LIGHT ENDS FR. PURIF. TOLUENEDIAMINE IN PROD. VIA...	10	–	–	–	–	•	†
K087	–	DECANTER TANK TAR SLUDGE FROM COKING OPERATIONS	100	–	–	–	–	•	†
F027	–	DISCARDED,UNUSED FORMU.W/ TRI,TETRA,PENTACHLOROPHENOLS OR DERIVATIVES	1	–	–	–	–	•	†
K048	–	DISSOLVED AIR FLOTATION (DAF) FLOAT FR. PETROLEUM REFINING INDUSTRY	1	–	–	–	–	•	†

CAS or Other I.D. No.	CHEMICAL NAME		RQ	TPQ	EHS	OSH	TOXIC	CERCLA	NOTES
K022	–	DISTILLATION BOTTOM TARS FR. PROD. OF PHENOL/ACETONE FR. CUMENE	1	–	–	–	–	•	†
K096	–	DISTILLATION BOTTOMS FR. PROD. 1,1,1-TRICHLOROETHANE	100	–	–	–	–	•	†
K025	–	DISTILLATION BOTTOMS FR. PROD. NITROBENZENE BY NITRATION OF BENZENE	10	–	–	–	–	•	†
K024	–	DISTILLATION BOTTOMS FR. PROD. PHTHALIC ANHYDRIDE FR. NAPHTHALENE	5000	–	–	–	–	•	†
K094	–	DISTILLATION BOTTOMS FR. PROD. PHTHALIC ANHYDRIDE FR. ORTHO-XYLENE	5000	–	–	–	–	•	†
K083	–	DISTILLATION BOTTOMS FROM ANILINE EXTRACTION	100	–	–	–	–	•	†
K009	–	DISTILLATION BOTTOMS FROM PRODUCTION OF ACETALDEHYDE FROM ETHYLENE	10	–	–	–	–	•	†
K023	–	DISTILLATION LIGHT ENDS FR. PROD. PHTHALIC ANHYDRIDE FR. NAPHTHALENE	5000	–	–	–	–	•	†
K093	–	DISTILLATION LIGHT ENDS FR. PROD. PHTHALIC ANHYDRIDE FR. ORTHO-XYLENE	5000	–	–	–	–	•	†
K085	–	DISTILLATION OR FRACTIONATION COLUMN BOTTOMS FROM CHLOROBENZENE PROD.	10	–	–	–	–	•	†
K010	–	DISTILLATION SIDE CUTS FROM PRODUCTION OF ACETALDEHYDE FROM ETHYLENE	10	–	–	–	–	•	†
[illegible]	–	DISTILLATION TAR RESIDUES FR. ANILINE-BASED COMPOUNDS VET. PHARMACEUT	1	–	–	–	–	•	†
[illegible]8	–	ELECTROPLATING BATH SLUDGES FROM BOTTOMS USING CYANIDES	10	–	–	–	–	•	†
K091	–	EMISSION CONTROL DUST OR SLUDGE FROM FERROCHROMIUM PRODUCTION	1	–	–	–	–	•	†
K090	–	EMISSION CONROL DUST OR SLUDGE FROM FERROCHROMIUM SILICON PROD.	1	–	–	–	–	•	†
K061	–	EMISSION CONTROL DUST/SLUDGE FR. PRIM. PROD. STEEL IN ELEC. FURNACES	1	–	–	–	–	•	†
K069	–	EMISSION CONTROL DUST/SLUDGE FR. SECONDARY LEAD SMELTING	1	–	–	–	–	•	†
K039	–	FILTER CAKE FR. FILTR. DIETHYLPHOSPHORODITHIOIC ACID IN PHORATE PROD.	10	–	–	–	–	•	†
K034	–	FILTER SOLIDS FR. FILTR. HEXACHLOROCYCLOPENTADIENE IN CHLORDANE PROD.	10	–	–	–	–	•	†
K050	–	HEAT EXCHANGER BUNDLE CLEANING SLUDGE FR. PETROLEUM REFINING INDUSTRY	10	–	–	–	–	•	†
K096	–	HEAVY ENDS FR. HEAVY ENDS COLUMN FR. PROD. 1,1,1-TRICHLOROETHANE	100	–	–	–	–	•	†
K019	–	HEAVY ENDS FROM DISTILLATION IN PRODUCTION OF ETHYLENE DICHLORIDE	1	–	–	–	–	•	†
K020	–	HEAVY ENDS FROM DISTILLATION IN PRODUCTION OF VINYL CHLORIDE MONOMERS	1	–	–	–	–	•	†
K018	–	HEAVY ENDS FROM FRACTIONATION COLUMN IN PRODUCTION OF ETHYL CHLORIDE	1	–	–	–	–	•	†
K016	–	HEAVY ENDS OR DISTILLATION RESIDUES FROM PROD.OF CARBON TETRACHLORIDE	1	–	–	–	–	•	†
K115	–	HEAVY ENDS PURIF. TOLUENEDIAMINE IN PROD. VIA HYDROG. DINITROTOLUENE	10	–	–	–	–	•	†
K217	–	HEAVY ENDS(STILL BOTTOMS) FROM PURIF. COLUMN IN PROD. EPICHLOROHYDRIN	10	–	–	–	–	•	†

© Thompson Publishing Group, Inc. 1990

CAS or Other I.D. No.	CHEMICAL NAME		RQ	TPQ	EHS	OSH	TOXIC	CERCLA	NOTES
K042	–	HEAVY ENDS/DIST. RESIDUES FR DIST. TETRACHLOROBENZENE IN 2,4,5-T PR.	10	–	–	–	–	•	†
K116	–	ORGANIC CONDENS. FR. SOLVENT RECOVERY COLUMN TOLUENE DIISOCYANATE VIA	10	–	–	–	–	•	†
K008	–	OVEN RESIDUE FROM THE PRODUCTION OF CHROME OXIDE GREEN PIGMENTS	10	–	–	–	–	•	†
K047	–	PINK/RED WATER FROM TNT OPERATIONS	10	–	–	–	–	•	†
K103	–	PROCESS RESIDUES FROM ANILINE EXTRACTION FROM ANILINE PROD.	100	–	–	–	–	•	†
F024	–	PROCESS WASTES FR. PROD. OF CERTAIN CHLORINATED ALIPHATIC HYDROCARBONS BY FREE RADICAL CATALYZED PROCESSES	1	–	–	–	–	•	†
K111	–	PRODUCT WASHWATERS FROM PROD. DINITROTOLUENE VIA NITRATION OF TOLUENE	10	–	–	–	–	•	†
F010	–	QUENCHING BATH SLUDGE (OIL BATH) (METAL HEAT TREATING) USING CYANIDES	10	–	–	–	–	•	†
F012	–	QUENCHING WASTEWATER TREAT SLUDGES FR METAL HEAT TREAT USING CYANIDES	10	–	–	–	–	•	†
K112	–	REACT. BY-PROD. WATER FR. DRYING COLUMN PROD. TOLUENEDIAMINE VIA...	10	–	–	–	–	•	†
K102	–	RESIDUE FR. ACTIVATED CARBON FOR DECOLORIZATION PROD. VET. PHARMACEUT	1	–	–	–	–	•	†
F028	–	RESIDUE FR. INCIN./THERMAL TREAT. SOIL CONTAMINATED W/SPECIFIED WASTE	1	–	–	–	–	•	†
K105	–	SEPARATED AQUEOUS STREAM FR. REACTOR PROD.WASHING STEP IN CHLOROBENZ.	10	–	–	–	–	•	†
K049	–	SLOP OIL EMULSION SOLIDS FROM THE PETROLEUM REFINING INDUSTRY	1	–	–	–	–	•	†
K066	–	SLUDGE FROM ... PROCESS WASTEWATER AND/OR ACID PLANT BLOWDOWN FROM PRIMARY ZINC PROD.	1	–	–	–	–	•	†
K001	–	SLUDGE OF WOOD PRESERVING PROCESSES USING CREOSOTE/PENTACHLOROPHENOL	1	–	–	–	–	•	†
K086	–	SOLVENT,WATER,CAUSTIC WASHES & SLUDGES CLEANING EQUIP. FOR INK FORMU.	1	–	–	–	–	•	†
F002	–	SPECIFIED SPENT HALOGENATED SOLVENTS AND STILL BOTTOMS FR. RECOVERY	10	–	–	–	–	•	†
F001	–	SPECIFIED SPENT HALOGENATED SOLVENTS USED DEGREASING & SLUDGES FR REC	10	–	–	–	–	•	†
F005	–	SPECIFIED SPENT NON-HALOGENATED SOLVENTS & STILL BOTTOMS FR. RECOVERY	100	–	–	–	–	•	†
F004	–	SPECIFIED SPENT NON-HALOGENATED SOLVENTS & STILL BOTTOMS FR. RECOVERY	1000	–	–	–	–	•	†
F003	–	SPECIFIED SPENT NON-HALOGENATED SOLVENTS & STILL BOTTOMS FR. RECOVERY	100	–	–	–	–	•	†
K118	–	SPENT ABSORBENT SOLIDS FR. PURIF. ETHYLENE DIBROMIDE IN PROD. OF IT	1	–	–	–	–	•	†
K132	–	SPENT ADSORBANT AND WASTEWATER SEPARATOR SOLIDS	1000	–	–	–	–	•	†
K045	–	SPENT CARBON FROM TREAT. OF WASTEWATER CONTAINING EXPLOSIVES	10	–	–	–	–	•	†
K028	–	SPENT CATALYST FR. HYDROCHLORINATOR REACTOR IN 1,1,1-TRICHLOROETHANE	1	–	–	–	–	•	†
F007	–	SPENT CYANIDE ELECTROPLATING BATH SOLUTIONS W/ SPECIFIED EXCEPTIONS	10	–	–	–	–	•	†

CAS or Other I.D. No.	CHEMICAL NAME	RQ	TPQ	EHS	OSH	TOXIC	CERCLA	NOTES
F011	SPENT CYANIDE SOLUTIONS FR SALT BATH POT CLEANING (METAL HEAT TREAT)	10	–	–	–	–	•	†
K109	– SPENT FILTER CARTRIDGES FR. PRODUCT PURIF. FR. PROD. OF 1,1-DIMETHLHYDRAZINE (UDMH) FR. CARBOXYLIC ACID HYDRAZINES	10	–	–	–	–	•	†
K062	– SPENT PICKLE LIQUOR FR. STEEL FINISHING OPERATIONS	1	–	–	–	–	•	†
K088	– SPENT POTLINERS FROM PRIMARY ALUMINUM REDUCTION	1	–	–	–	–	•	†
F009	– SPENT STRIPPING & CLEANING SOLUTIONS (ELECTROPLATING) USING CYANIDES	10	–	–	–	–	•	†
K136	– STILL BOTTOMS FR. PURIF. ETHYLENE DIBROMIDE IN PROD. VIA BROMINATION	1	–	–	–	–	•	†
K036	– STILL BOTTOMS FR. TOLUENE RECLAMATION DISTIL. IN DISULFOTON PROD.	1	–	–	–	–	•	†
K015	– STILL BOTTOMS FROM THE DISTILLATION OF BENZYL CHLORIDE	10	–	–	–	–	•	†
K026	– STRIPPING STILL TAILS FR. PROD. METHYL ETHYL PYRIDINES	1000	–	–	–	–	•	†
K065	– SURFACE IMPOUNDMENT SOLIDS FROM PRIMARY LEAD SMELTING FACILITIES	1	–	–	–	–	•	†
K052	– TANK BOTTOMS (LEADED) FR. PETROLEUM REFINING INDUSTRY	10	–	–	–	–	•	†
D017	– UNLISTED HAZ. WASTE CHARACTERISTIC OF EP TOXICITY - 2,4,5-TP	100	–	–	–	–	•	†
D016	– UNLISTED HAZ. WASTE CHARACTERISTIC OF EP TOXICITY - 2,4-D	100	–	–	–	–	•	†
D004	– UNLISTED HAZ. WASTE CHARACTERISTIC OF EP TOXICITY - ARSENIC	1	–	–	–	–	•	†
	– UNLISTED HAZ. WASTE CHARACTERISTIC OF EP TOXICITY - BARIUM	1000	–	–	–	–	•	†
	– UNLISTED HAZ. WASTE CHARACTERISTIC OF EP TOXICITY - CADMIUM	10	–	–	–	–	•	†
D007	– UNLISTED HAZ. WASTE CHARACTERISTIC OF EP TOXICITY - CHROMIUM	10	–	–	–	–	•	†
D012	– UNLISTED HAZ. WASTE CHARACTERISTIC OF EP TOXICITY - ENDRIN	1	–	–	–	–	•	†
D008	– UNLISTED HAZ. WASTE CHARACTERISTIC OF EP TOXICITY - LEAD	1	–	–	–	–	•	†
D013	– UNLISTED HAZ. WASTE CHARACTERISTIC OF EP TOXICITY - LINDANE	1	–	–	–	–	•	†
D009	– UNLISTED HAZ. WASTE CHARACTERISTIC OF EP TOXICITY - MERCURY	1	–	–	–	–	•	†
D014	– UNLISTED HAZ. WASTE CHARACTERISTIC OF EP TOXICITY - METHOXYCHLOR	1	–	–	–	–	•	†
D010	– UNLISTED HAZ. WASTE CHARACTERISTIC OF EP TOXICITY - SELENIUM	10	–	–	–	–	•	†
D011	– UNLISTED HAZ. WASTE CHARACTERISTIC OF EP TOXICITY - SILVER	1	–	–	–	–	•	†
D015	– UNLISTED HAZ. WASTE CHARACTERISTIC OF EP TOXICITY - TOXAPHENE	1	–	–	–	–	•	†
D002	– UNLISTED HAZARDOUS WASTES - CHARACTERISTIC OF CORROSIVITY	100	–	–	–	–	•	†
D—(RCRA)	– UNLISTED HAZARDOUS WASTES - CHARACTERISTIC OF EP TOXICITY	–	–	–	–	–	•	†
D001	– UNLISTED HAZARDOUS WASTES - CHARACTERISTIC OF IGNITABILITY	100	–	–	–	–	•	†
D003	– UNLISTED HAZARDOUS WASTES - CHARACTERISTIC OF REACTIVITY	100	–	–	–	–	•	†
K098	– UNTREATED PROCESS WASTEWATER FR. TOXAPHENE PROD.	1	–	–	–	–	•	†
K099	– UNTREATED WASTEWATER FR. 2,4-D PROD.	10	–	–	–	–	•	†
K097	– VACUUM STRIPPER DISCHARGE FR. CHLORDANE CHLORINATOR IN CHLORDANE PROD	1	–	–	–	–	•	†
K114	– VICINALS FR. PURIF. TOLUENEDIAMINE IN PROD. VIA HYDROG. DINITROTOLUEN	10	–	–	–	–	•	†
	– WASTE FR. PRODUCT STEAM STRIPPER IN 1,1,1-TRICHLOROETHANE PROD.	1	–	–	–	–	•	†

© Thomson Publishing Group, Inc. 1990

CAS or Other I.D. No.	CHEMICAL NAME		RQ	TPQ	EHS	OSH	TOXIC	CERCLA	NOTES
K100	–	WASTE LEACHING SOLUTION – (COMPONENTS IDENTICAL WITH THOSE OF K069)	1	–	–	–	–	•	†
K033	–	WASTE- & SCRUBWATER FR. CHLORIN. CYCLOPENTADIENE IN CHLORDANE PROD.	10	–	–	–	–	•	†
F022	–	WASTES FR. MANU. USE OF TETRA-,PENTA-, OR HEXACHLOROBENZENE (ALKALINE)	1	–	–	–	–	•	†
F026	–	WASTES FR. PROD. MATERIALS ON EQUIP. FOR TETRA,PENTA,HEXACHLOROBENZEN	1	–	–	–	–	•	†
F023	–	WASTES FR. PROD. OF MATERIALS ON EQUIP. FOR TRI- & TETRACHLOROPHENOLS	1	–	–	–	–	•	†
F021	–	WASTES IN PROD. OR MANU. OF PENTACHLOROPHENOL/INTERMED. TO PROD DERIV	1	–	–	–	–	•	†
F020	–	WASTES IN PROD. OR MANU. OF TRI- OR TETRACHLOROPHENOL, OR PEST. DERIV	1	–	–	–	–	•	†
K117	–	WASTEWATER FR. REACTION VENT GAS SCRUBBER PROD. ETHYLENE BROMIDE VIA	1	–	–	–	–	•	†
K131	–	WASTEWATER FROM REACTOR AND ACID DRYER	100	–	–	–	–	•	†
K038	–	WASTEWATER FR. WASHING AND STRIPPING OF PHORATE PROD.	10	–	–	–	–	•	†
K006	–	WASTEWATER SLUDGE FR PROD. CHROME OXIDE GREEN PIGMENTS (ANHY. & HYD.)	10	–	–	–	–	•	†
K002	–	WASTEWATER SLUDGE FROM PRODUCTION OF CHROME YELLOW & ORANGE PIGMENTS	1	–	–	–	–	•	†
K003	–	WASTEWATER SLUDGE FROM PRODUCTION OF MOLYBDATE ORANGE PIGMENTS	1	–	–	–	–	•	†
K046	–	WASTEWATER TR. SLUDGE FROM MANU. FORMU. LOADING OF LEAD-BASED INITIATOR	100	–	–	–	–	•	†
K040	–	WASTEWATER TREAT. SLUDGE FROM PHORATE PROD.	10	–	–	–	–	•	†
K032	–	WASTEWATER TREAT. SLUDGE FROM PROD. OF CHLORDANE	10	–	–	–	–	•	†
K041	–	WASTEWATER TREAT. SLUDGE FROM TOXAPHENE PROD.	1	–	–	–	–	•	†
K037	–	WASTEWATER TREAT. SLUDGES FROM DISULFOTON PROD.	1	–	–	–	–	•	†
K044	–	WASTEWATER TREAT. SLUDGES FROM MANU. & PROCESSING OF EXPLOSIVES	10	–	–	–	–	•	†
K035	–	WASTEWATER TREAT. SLUDGES GENERATED IN CREOSOTE PROD.	1	–	–	–	–	•	†
K084	–	WASTEWATER TREAT. SLUDGES IN PROD. OF VETERINARY PHARMACEUT (ARSENIC)	1	–	–	–	–	•	†
[illegible]	–	WASTEWATER TREATMENT SLUDGE FR. MERCURY CELL PROCESS IN CHLORINE PROD	1	–	–	–	–	•	†
K005	–	WASTEWATER TREATMENT SLUDGE FROM PRODUCTION OF CHROME GREEN PIGMENTS	1	–	–	–	–	•	†
K007	–	WASTEWATER TREATMENT SLUDGE FROM PRODUCTION OF IRON BLUE PIGMENTS	10	–	–	–	–	•	†
K004	–	WASTEWATER TREATMENT SLUDGE FROM PRODUCTION OF ZINC YELLOW PIGMENTS	10	–	–	–	–	•	†
F019	–	WASTEWATER TREATMENT SLUDGES (CHEM. CONVERSION COATING OF ALUMINUM)	10	–	–	–	–	•	†
F006	–	WASTEWATER TREATMENT SLUDGES (ELECTROPLATING) W/ SPECIFIED EXCEPTIONS	10	–	–	–	–	•	†

[Chemical List continued on next page]

CAS or Other No.		CHEMICAL NAME	RQ	TPQ	EHS	OSH	TOXIC	CERCLA	NOTES
83-32-9	–	ACENAPHTHENE	100	–	–	–	–	•	–
208-96-8	–	ACENAPHTHYLENE	5000	–	–	–	–	•	–
105-57-7	–	ACETAL	–	–	–	•	–	–	–
75-07-0	–	ACETALDEHYDE	1000	–	–	•	•	•	–
107-20-0	–	ACETALDEHYDE, CHLORO-	1000	–	–	?	–	•	–
75-87-6	–	ACETALDEHYDE, TRICHLORO-	5000	–	–	–	–	•	–
60-35-5	–	ACETAMIDE	–	–	–	–	•	–	–
640-19-7	–	ACETAMIDE, 2-FLUORO-	100	–	?	–	–	•	–
62-44-2	–	ACETAMIDE, N-(4-ETHOXYPHENYL)-	100	–	–	?	–	•	–
591-08-2	–	ACETAMIDE, N-(AMINOTHIOXOMETHYL)-	1000	–	–	–	–	•	–
53-96-3	–	ACETAMIDE, N-9H-FLUOREN-2-YL)-	1	–	–	?	?	•	–
64-19-7	–	ACETIC ACID	5000	–	–	•	–	•	–
141-78-6	–	ACETIC ACID, ETHYL ESTER	5000	–	–	?	–	•	–
62-74-8	–	ACETIC ACID, FLUORO-, SODIUM SALT	10	–	?	?	–	•	–
301-04-2	–	ACETIC ACID, LEAD SALT	5000	–	–	?	–	•	–
563-68-8	–	ACETIC ACID, THALLIUM(I) SALT	100	–	–	–	–	•	–
108-24-7	–	ACETIC ANHYDRIDE	5000	–	–	•	–	•	–
16752-77-5	–	ACETIMIDIC ACID, N-METHYLCARBAMOYL) OXYTHIO-, METHYL ESTER	100	–	?	?	–	•	–
67-64-1	–	ACETONE	5000	–	–	•	•	•	–
75-86-5	–	ACETONE CYANOHYDRIN	10	1000	•	–	–	•	–
1752-30-3	–	ACETONE THIOSEMICARBAZIDE	1	1000/10000	•	–	–	–	e
75-05-8	–	ACETONITRILE	5000	–	–	•	•	•	–
81-81-2	3-(ALPHA-	ACETONYLBENZYL)-4-HYDROXYCOUMARIN AND SALTS	100	–	?	?	–	•	–
98-86-2	–	ACETOPHENONE	5000	–	–	–	–	•	–
506-96-7	–	ACETYL BROMIDE	5000	–	–	–	–	•	–
75-36-5	–	ACETYL CHLORIDE	5000	–	–	–	–	•	–
591-08-2	1-	ACETYL-2-THIOUREA	1000	–	–	–	–	•	–
53-96-3	2-	ACETYLAMINOFLUORENE	1	–	–	•	•	•	–
[illegible]-2	–	ACETYLENE	–	–	–	•	–	–	–
[illegible]-6	–	ACETYLENE TETRABROMIDE	–	–	–	•	–	–	–
[illegible]5-2	–	ACETYLSALICYLIC ACID (ASPIRIN)	–	–	–	•	–	–	–
94-6	–	ACRIDINE	–	–	–	•	–	–	–
[illegible]-02-8	–	ACROLEIN	1	500	•	•	•	•	–
79-06-1	–	ACRYLAMIDE	5000	1000/10000	•	•	•	•	d
79-10-7	–	ACRYLIC ACID	5000	–	–	•	•	•	–
107-13-1	–	ACRYLONITRILE	100	10000	•	•	•	•	d
814-68-6	–	ACRYLYL CHLORIDE	1	100	•	–	–	–	e,h
13768-00-8	–	ACTINOLITE	–	–	–	•	–	–	–
50-76-0	–	ACTINOMYCIN D	–	–	–	•	–	–	–
7066-92-8	–	ACTINOMYCIN D	–	–	–	•	–	–	–
124-04-9	–	ADIPIC ACID	5000	–	–	–	–	•	–
111-69-3	–	ADIPONITRILE	1	1000	•	–	–	–	d
23214-92-8	–	ADRIAMYCIN	–	–	–	•	–	–	–
2688-53-7	–	AF-2	–	–	–	•	–	–	–
1162-65-8	–	AFLATOXIN B1	–	–	–	•	–	–	–
1402-68-2	–	AFLATOXINS	–	–	–	•	–	–	–
148-82-3	–	ALANINE, 3-P-BIS(2-CHLOROETHYL) AMINOPHENYL-,L	1	–	–	?	–	•	–
116-06-3	–	ALDICARB	1	100/10000	•	–	–	•	c
309-00-2	–	ALDRIN	1	500/10000	•	•	•	•	d
107-18-6	–	ALLYL ALCOHOL	100	1000	•	•	•	•	–
107-05-1	–	ALLYL CHLORIDE	1000	–	–	•	•	•	–
106-92-3	–	ALLYL GLYCIDYL ETHER (AGE)	–	–	–	•	–	–	–
2179-59-1	–	ALLYL PROPYL DISULFIDE	–	–	–	•	–	–	–
107-11-9	–	ALLYLAMINE	1	500	•	–	–	–	e
1344-28-1	ALPHA-	ALUMINA	–	–	–	•	?	–	–
7429-90-5	–	ALUMINUM	–	–	–	•	?	–	–
7429-90-5	–	ALUMINUM (FUME OR DUST)	–	–	–	?	•	–	–
7429-90-5	–	ALUMINUM ALKYLS (NOC)=NOT OTHERWISE CITED	–	–	–	•	?	–	–
7429-90-5	–	ALUMINUM METAL	–	–	–	•	?	–	–
1344-28-1	–	ALUMINUM OXIDE	–	–	–	•	–	–	–
1344-28-1	–	ALUMINUM OXIDE (FIBROUS FORMS)	–	–	–	?	•	–	–
20859-73-8	–	ALUMINUM PHOSPHIDE	100	500	•	–	–	•	b
7429-90-5	–	ALUMINUM PYRO POWDERS	–	–	–	•	?	–	–
10043-01-3	–	ALUMINUM SULFATE	5000	–	–	–	–	•	–
7429-90-5	–	ALUMINUM, SOLUBLE SALTS	–	–	–	•	?	–	–
[illegible]-90-5	–	ALUMINUM, WELDING FUMES	–	–	–	•	?	–	–

© Thompson Publishing Group, Inc. 1990

CAS or Other I.D. No.	CHEMICAL NAME		RQ	TPQ	EHS	OSH	TOXIC	CERCLA	NOTES
[illegible]-0	1-	AMINO-2-METHYLANTHRAQUINONE	–	–	–	?	•	–	–
712-68-5	2-	AMINO-5-(5-NITRO-2-FURYL)-1,3,4-THIADIAZOLE	–	–	–	•	–	–	–
117-79-3	2-	AMINOANTHRAQUINONE	–	–	–	•	•	–	–
60-09-3	4-	AMINOAZOBENZENE	–	–	–	–	•	–	–
97-56-3	O-	AMINOAZOTOLUENE	–	–	–	•	?	–	–
92-67-1	4-	AMINOBIPHENYL	–	–	–	•	•	–	–
92-67-1	4-	AMINODIPHENYL	–	–	–	•	?	–	–
2763-96-4	5-(	AMINOMETHYL)-3-ISOXAZOLOL	1000	–	?	–	–	•	–
54-62-6	–	AMINOPTERIN	1	500/10000	•	–	–	–	•
504-24-5	4-	AMINOPYRIDINE	1000	–	?	–	–	•	–
504-29-0	2-	AMINOPYRIDINE	–	–	–	•	•	–	–
2432-99-7	11-	AMINOUNDECANOIC ACID	–	–	–	•		–	–
78-53-5	–	AMITON	1	500	•	–	–	–	•
3734-97-2	–	AMITON OXALATE	1	100/10000	•	–	–	–	•
61-82-5	–	AMITROLE	10	–	–	•	–	•	–
7664-41-7	–	AMMONIA	100	500	•	•	•	•	1
631-61-8	–	AMMONIUM ACETATE	5000	–	–	–	–	•	–
1863-63-4	–	AMMONIUM BENZOATE	5000	–	–	–	–	•	–
1066-33-7	–	AMMONIUM BICARBONATE	5000	–	–	–	–	•	–
7789-09-5	–	AMMONIUM BICHROMATE	10	–	–	–	–	•	–
1341-49-7	–	AMMONIUM BIFLUORIDE	100	–	–	–	–	•	–
10192-30-0	–	AMMONIUM BISULFITE	5000	–	–	–	–	•	–
1111-78-0	–	AMMONIUM CARBAMATE	5000	–	–	–	–	•	–
506-87-6	–	AMMONIUM CARBONATE	5000	–	–	–	–	•	–
12125-02-9	–	AMMONIUM CHLORIDE	5000	–	–	•	–	•	–
12125-02-9	–	AMMONIUM CHLORIDE-FUME	–	–	–	•	–	?	–
7788-98-9	–	AMMONIUM CHROMATE	10	–	–	–	–	•	–
3012-65-5	–	AMMONIUM CITRATE, DIBASIC	5000	–	–	–	–	•	–
13826-83-0	–	AMMONIUM FLUOBORATE	5000	–	–	–	–	•	–
12125-01-8	–	AMMONIUM FLUORIDE	100	–	–	–	–	•	–
1336-21-6	–	AMMONIUM HYDROXIDE	1000	–	–	–	–	•	–
6484-52-2	–	AMMONIUM NITRATE (SOLUTION)	–	–	–	–	•	–	–
5972-73-6	–	AMMONIUM OXALATE	5000	–	–	–	–	•	–
6009-70-7	–	AMMONIUM OXALATE	5000	–	–	–	–	•	–
14258-49-2	–	AMMONIUM OXALATE	5000	–	–	–	–	•	–
3825-26-1	–	AMMONIUM PERFLUOROOCTANOATE	–	–	–	•	–	–	–
131-74-8	–	AMMONIUM PICRATE	10	–	–	–	–	•	–
16919-19-0	–	AMMONIUM SILICOFLUORIDE	1000	–	–	–	–	•	–
7773-06-0	–	AMMONIUM SULFAMATE	5000	–	–	•	–	•	–
7783-20-2	–	AMMONIUM SULFATE (SOLUTION)	–	–	–	–	•	–	–
12135-76-1	–	AMMONIUM SULFIDE	100	–	–	–	–	•	–
10196-04-0	–	AMMONIUM SULFITE	5000	–	–	–	–	•	–
3164-29-2	–	AMMONIUM TARTRATE	5000	–	–	–	–	•	–
14307-43-8	–	AMMONIUM TARTRATE	5000	–	–	–	–	•	–
1762-95-4	–	AMMONIUM THIOCYANATE	5000	–	–	–	–	•	–
7783-18-8	–	AMMONIUM THIOSULFATE	5000	–	–	–	–	•	–
7803-55-6	–	AMMONIUM VANADATE	1000	–	–	–	–	•	–
12172-73-5	–	AMOSITE	–	–	–	•	–	–	–
300-62-9	–	AMPHETAMINE	1	1000	•	–	–	–	•
123-92-2	ISO-	AMYL ACETATE	5000	–	–	?	–	•	–
625-16-1	TERT-	AMYL ACETATE	5000	–	–	–	–	•	–
626-38-0	SEC-	AMYL ACETATE	5000	–	–	•	–	•	–
628-63-7	N-	AMYL ACETATE	–	–	–	•	–	?	–
628-63-7	–	AMYL ACETATE	5000	–	–	?	–	•	–
62-53-3	–	ANILINE	5000	1000	•	•	•	•	2
88-05-1	–	ANILINE, 2,4,6-TRIMETHYL-	1	500	•	–	–	–	•
90-04-0	O-	ANISIDINE	–	–	–	•	•	–	–
104-94-9	P-	ANISIDINE	–	–	–	•	•	–	–
29191-52-4	–	ANISIDINE (O,P-ISOMERS)	–	–	–	•	–	–	–
134-29-2	O-	ANISIDINE HYDROCHLORIDE	–	–	–	•	•	–	–
17068-78-9	–	ANTHOPHYLLITE	–	–	–	•	–	–	–
120-12-7	–	ANTHRACENE	5000	–	–	•	•	•	–
7440-36-0	–	ANTIMONY	5000	–	–	•	•	•	–
7440-36-0	–	ANTIMONY COMPOUNDS	–	–	–	•	?	?	–
–	–	ANTIMONY COMPOUNDS (SEE REGULATION FOR DEFINITION)	–	–	–	–	•	•	–
7647-18-9	–	ANTIMONY PENTACHLORIDE	1000	–	–	–	–	•	–
7783-70-2	–	ANTIMONY PENTAFLUORIDE	1	500	•	–	–	–	•
28300-74-5	–	ANTIMONY POTASSIUM TARTRATE	100	–	–	–	–	•	–
7789-61-9	–	ANTIMONY TRIBROMIDE	1000	–	–	–	–	•	–

CAS or Other ID No.	CHEMICAL NAME		RQ	TPQ	EHS	OSH	TOXIC	CERCLA	NOTES
10025-91-9	-	ANTIMONY TRICHLORIDE	1000	-	-	-	-	•	-
7783-56-4	-	ANTIMONY TRIFLUORIDE	1000	-	-	-	-	•	-
[illegible]		ANTIMONY TRIOXIDE	1000	-	-	•	-	•	-
1309-64-4	-	ANTIMONIUM TRIOXIDE, HANDLING AND USE, AS SB	-	-	-	•	-	?	-
1309-64-4	-	ANTIMONY TRIOXIDE, PRODUCTION	-	-	-	•	-	?	-
1397-94-0	-	ANTIMYCIN A	1	1000/10000	•	-	-	-	c,e
-	-	ANTRACENE OILS	-	-	-	•	-	-	-
86-88-4	-	ANTU	100	500/10000	•	•	-	?	-
140-57-8	-	ARAMITE	-	-	-	•	-	-	-
7440-37-1	-	ARGON	-	-	-	•	-	-	-
12674-11-2	-	AROCLOR 1016	1	-	-	-	-	•	-
11104-28-2	-	AROCLOR 1221	1	-	-	-	-	•	-
11141-16-5	-	AROCLOR 1232	1	-	-	-	-	•	-
53469-21-9	-	AROCLOR 1242	1	-	-	?	-	•	-
12672-29-6	-	AROCLOR 1248	1	-	-	-	-	•	-
11097-69-1	-	AROCLOR 1254	1	-	-	?	-	•	-
11096-82-5	-	AROCLOR 1260	1	-	-	-	-	•	-
7440-38-2	-	ARSENIC	1	-	-	•	•	•	-
1327-52-2	-	ARSENIC ACID	1	-	-	-	-	•	-
7778-39-4	-	ARSENIC ACID	1	-	-	-	-	•	-
1327-52-2	-	ARSENIC ACID H3ASO4	1	-	-	-	-	•	-
7778-39-4	-	ARSENIC ACID H3ASO4	1	-	-	-	-	•	-
7440-38-2	-	ARSENIC AND COMPOUNDS	-	-	-	•	?	?	-
-	-	ARSENIC COMPOUNDS (SEE REGULATION FOR DEFINITION)	-	-	-	-	•	•	-
1303-32-8	-	ARSENIC DISULFIDE	1	-	-	-	-	•	-
1303-28-2	-	ARSENIC PENTOXIDE	1	100/10000	•	•	-	•	d
7784-34-1	-	ARSENIC TRICHLORIDE	1	-	?	-	-	•	-
1327-53-3	-	ARSENIC TRIOXIDE	1	-	?	•	-	•	-
1327-53-3	-	ARSENIC TRIOXIDE PRODUCTION	-	-	?	•	-	?	-
[illegible]-33-9	-	ARSENIC TRISULFIDE	1	-	-	-	-	•	-
[illegible]53-3	-	ARSENIC OXIDE AS203	1	-	?	?	-	•	-
[illegible]-28-2	-	ARSENIC OXIDE AS205	1	-	?	?	-	•	-
[illegible]-38-2	-	ARSENIC, INORGANIC COMPOUNDS	-	-	-	•	?	?	-
[illegible]-38-2	-	ARSENIC, ORGANIC COMPOUNDS	-	-	-	•	?	?	-
7440-38-2	-	ARSENIC, SOLUBLE COMPOUNDS	-	-	-	•	?	?	-
1327-53-3	-	ARSENOUS OXIDE	1	100/10000	•	?	-	?	d,h
7784-34-1	-	ARSENOUS TRICHLORIDE	1	500	•	-	-	?	d
7784-42-1	-	ARSINE	1	100	•	•	-	-	•
692-42-2	-	ARSINE, DIETHYL	1	-	-	-	-	•	-
75-60-5	-	ARSENIC ACID, DIMETHYL	1	-	-	-	-	•	-
1332-21-4	-	ASBESTOS	1	-	-	•	?	•	-
1332-21-4	-	ASBESTOS (FRIABLE)	-	-	-	?	•	?	-
12001-28-4	-	ASBESTOS, CROCIDOLITE	-	-	-	•	-	-	-
12001-29-5	-	ASBESTOS, CHRYSOTILE	-	-	-	•	-	-	-
8052-42-4	-	ASPHALT	-	-	-	•	-	-	-
8052-42-4	-	ASPHALT (PETROLEUM) FUMES	-	-	-	•	-	-	-
1912-24-9	-	ATRAZINE	-	-	-	•	-	-	-
492-80-8	-	AURAMINE	100	-	-	•	?	•	-
2465-27-2	-	AURAMINE	-	-	-	•	-	-	-
492-80-8		AURAMINE, MANUFACTURE OF	-	-	-	•	?	?	-
2465-27-2	-	AURAMINE, MANUFACTURE OF	-	-	-	•	-	-	-
492-80-8	-	AURAMINE, TECHNICAL GRADE	-	-	-	•	?	?	-
115-02-6	-	AZASERINE	1	-	-	•	-	•	-
446-86-6	-	AZATHIOPRINE	-	-	-	•	-	-	-
2642-71-9	-	AZINPHOS-ETHYL	1	100/10000	•	-	-	-	e
86-50-0	-	AZINPHOSMETHYL	1	10/10000	•	•	-	?	-
151-56-4	-	AZIRIDINE	1	-	?	?	?	•	-
75-55-8	-	AZIRIDINE, 2-METHYL	1	-	?	?	?	•	-
50-07-7	-	AZIRINO(2',3':3,4)PYRROLO(1,2-A)INDOLE-4,7-DIONE,6-[(SEE MITOMYCIN C)	10	-	?	?	-	•	-
7440-39-3	-	BARIUM	-	-	-	•	•	-	-
-	-	BARIUM COMPOUNDS (SEE REGULATION FOR DEFINITION)	-	-	-	-	•	-	-
542-62-1	-	BARIUM CYANIDE	10	-	-	-	-	•	-
7440-39-3	-	BARIUM, SOLUBLE COMPOUNDS	-	-	-	•	?	-	-
17804-35-2	-	BENOMYL	-	-	-	•	-	-	-
98-87-3	-	BENZAL CHLORIDE	5000	500	•	-	•	•	d
55-21-0	-	BENZAMIDE	-	-	-	-	•	-	-
[illegible]-3	1,2-	BENZANTHRACENE	10	-	-	?	-	•	-
[illegible]-6	1,2-	BENZANTHRACENE, 7,12-DIMETHYL-	1	-	-	-	-	•	-

© Thompson Publishing Group, Inc. 1990

CAS or Other I.D. No.		CHEMICAL NAME	RQ	TPQ	EHS	OSH	TOXIC	CERCLA	NOTES
62-53-3	-	BENZENAMINE	5000	-	?	?	?	•	-
95-53-4	-	BENZENAMINE, 2-METHYL	100	-	-	?	?	•	-
636-21-5	-	BENZENAMINE, 2-METHYL-, HYDROCHLORIDE	100	-	-	?	?	•	-
99-55-8	-	BENZENAMINE, 2-METHYL-5-NITRO	100	-	-	-	-	•	-
98-16-8	-	BENZENAMINE, 3-(TRIFLUOROMETHYL)-	1	500	•	-	-	-	•
106-49-0	-	BENZENAMINE, 4-METHYL	100	-	-	?	-	•	-
492-80-8	-	BENZENAMINE, 4,4'-CARBONIMIDOYLBIS(N,N-DIMETHYL-	100	-	-	?	?	•	-
101-14-4	-	BENZENAMINE, 4,4'-METHYLENEBIS(2-CHLORO-	10	-	-	?	?	•	-
106-47-8	-	BENZENAMINE, 4-CHLORO	1000	-	-	-	-	•	-
3165-93-3	-	BENZENAMINE, 4-CHLORO-2-METHYL-, HYDROCHLORIDE	100	-	-	-	-	•	-
100-01-6	-	BENZENAMINE, 4-NITRO	5000	-	-	?	-	•	-
60-11-7	-	BENZENAMINE, N,N-DIMETHYL-4-PHENYLAZO-	10	-	-	?	?	•	-
71-43-2	-	BENZENE	10	-	-	•	•	•	-
72-54-8	1,2-	BENZENE, 1, 1'-(2,2-DICHLOROETHYLIDENE) BIS(4-CHLORO-	1	-	-	-	-	•	-
50-29-3	-	BENZENE, 1,1'-(2,2,2-TRICHLOROETHYLIDENE) BIS(4-CHLORO	1	-	-	?	-	•	-
95-94-3	-	BENZENE, 1,2,4,5-TETRACHLORO-	5000	-	-	-	-	•	-
95-50-1	-	BENZENE, 1,2-DICHLORO-	100	-	-	?	?	•	-
99-35-4	-	BENZENE, 1,3,5-TRINITRO-	10	-	-	-	-	•	-
541-73-1	-	BENZENE, 1,3-DICHLORO-	100	-	-	-	?	•	-
106-46-7	-	BENZENE, 1,4-DICHLORO-	100	-	-	?	?	•	-
100-14-1	-	BENZENE, 1-(CHLOROMETHYL)-4-NITRO-	1	500/10000	•	-	-	-	•
101-55-3	-	BENZENE, 1-BROMO-4-PHENOXY-	100	-	-	-	-	•	-
121-14-2	-	BENZENE, 1-METHYL-2,4-DINITRO-	10	-	-	-	?	•	-
98-82-8	-	BENZENE, 1-METHYLETHYL-	5000	-	-	?	?	•	-
606-20-2	-	BENZENE, 2-METHYL-1,3-DINITRO-	100	-	-	-	?	•	-
91-08-7	-	BENZENE, 2,4-DIISOCYANATOMETHYL-	100	-	?	?	?	•	-
584-84-9	-	BENZENE, 2,4-DIISOCYANATOMETHYL-	100	-	?	?	?	•	-
26471-62-5	-	BENZENE, 2,4-DIISOCYANATOMETHYL-	100	-	-	?	-	•	-
108-90-7	-	BENZENE, CHLORO-	100	-	-	?	?	•	-
100-44-7	-	BENZENE, CHLOROMETHYL-	100	-	?	?	?	•	-
98-87-3	-	BENZENE, DICHLOROMETHYL-	5000	-	?	-	?	•	-
95-47-6	O-	BENZENE, DIMETHYL	1000	-	-	?	?	•	-
106-42-3	P-	BENZENE, DIMETHYL	1000	-	-	?	?	•	-
108-38-3	M-	BENZENE, DIMETHYL	1000	-	-	?	?	•	-
1330-20-7	-	BENZENE, DIMETHYL-	1000	-	-	-	?	•	-
118-74-1	-	BENZENE, HEXACHLORO-	10	-	-	?	?	•	-
110-82-7	-	BENZENE, HEXAHYDRO-	1000	-	-	?	?	•	-
108-95-2	-	BENZENE, HYDROXY-	1000	-	?	?	?	•	-
108-88-3	-	BENZENE, METHYL-	1000	-	-	?	?	•	-
98-95-3	-	BENZENE, NITRO	1000	-	?	?	?	•	-
608-93-5	-	BENZENE, PENTACHLORO-	10	-	-	-	-	•	-
82-68-8	-	BENZENE, PENTACHLORONITRO-	100	-	-	-	?	•	-
98-07-7	-	BENZENE, TRICHLOROMETHYL	10	-	?	?	?	•	-
510-15-6	-	BENZENEACETIC ACID, 4-CHLORO-ALPHA-(4-CHLOROPHENYL)-ALPHA-HYDROXY-...	10	-	-	-	?	•	-
98-05-5	-	BENZENEARSONIC ACID	1	10/10000	•	-	-	-	•
305-03-3	-	BENZENEBUTANOIC ACID, 4-[BIS(2-CHLOROETHYL)AMINO]-	10	-	-	?	-	•	-
95-80-7	-	BENZENEDIAMINE, AR-METHYL-	10	-	-	?	?	•	-
496-72-0	-	BENZENEDIAMINE, AR-METHYL-	10	-	-	-	-	•	-
823-40-5	-	BENZENEDIAMINE, AR-METHYL-	10	-	-	-	-	•	-
25376-45-8	-	BENZENEDIAMINE, AR-METHYL-	10	-	-	-	?	•	-
85-44-9	1,2-	BENZENEDICARBOXYLIC ACID ANHYDRIDE	5000	-	-	?	?	•	-
117-84-0	1,2-	BENZENEDICARBOXYLIC ACID, DI-N-OCTYL ESTER	5000	-	-	-	?	•	-
84-74-2	1,2-	BENZENEDICARBOXYLIC ACID, DIBUTYL ESTER	10	-	-	?	?	•	-
84-66-2	1,2-	BENZENEDICARBOXYLIC ACID, DIETHYL ESTER	1000	-	-	?	?	•	-
131-11-3	1,2-	BENZENEDICARBOXYLIC ACID, DIMETHYL ESTER	5000	-	-	?	?	•	-
117-81-7	1,2-	BENZENEDICARBOXYLIC ACID, [BIS(2-ETHYLHEXYL)] ESTER	100	-	-	?	?	•	-

CAS or Other ID. No.	CHEMICAL NAME		RQ	TPQ	EHS	OSH	TOXIC	CERCLA	NOTES
108-46-3	1,3-	BENZENEDIOL	5000	–	–	?	–	•	–
51-43-4	1,2-	BENZENEDIOL,4-[1-HYDROXY-2-(METHYLAMINO)ETHYL]-	1000	–	–	–	–	•	–
98-09-9	–	BENZENESULFONIC ACID CHLORIDE	100	–	–	–	–	•	–
98-09-9	–	BENZENESULFONYL CHLORIDE	100	–	–	–	–	•	–
108-98-5	–	BENZENETHIOL	100	–	?	?	–	•	–
92-87-5	–	BENZIDINE	1	–	–	•	•	•	–
3615-21-2	–	BENZIMIDAZOLE, 4,5-DICHOLORO-2-(TRIFLUOROMETHYL)-	1	500/10000	•	–	–	–	e,g
81-07-2	1,2-	BENZISOTHIAZOLIN-3-ONE,1,1-DIOXIDE, AND SALTS	100	–	–	?	?	•	–
50-32-8	–	BENZO(A)PYRENE	1	–	–	•	–	•	–
205-99-2	–	BENZO(B)FLUORANTHENE	1	–	–	•	–	•	–
205-82-3	–	BENZO(J)FLUORANTHENE	–	–	–	•	–	–	–
207-08-9	–	BENZO(K)FLUORANTHENE	5000	–	–	•	–	•	–
189-55-9	–	BENZO [RST] PENTAPHENE	10	–	–	?	–	•	–
94-59-7	1,3-	BENZODIOXOLE, 5-(2-PROPENYL)-	100	–	–	?	?	•	–
120-58-1	1,3-	BENZODIOXOLE, 5-(1-PROPENYL)-	100	–	–	?	–	•	–
94-58-6	1,3-	BENZODIOXOLE, 5-PROPYL-	10	–	–	?	–	•	–
65-85-0	–	BENZOIC ACID	5000	–	–	–	–	•	–
98-07-7	–	BENZOIC TRICHLORIDE (BENZOTRICHLORIDE)	10	100	•	•	•	•	d
100-47-0	–	BENZONITRILE	5000	–	–	–	–	•	–
50-32-8	3,4-	BENZOPYRENE	1	–	–	?	–	•	–
106-51-4	P-	BENZOQUINONE	10	–	–	?	?	•	–
98-07-7	–	BENZOTRICHLORIDE	10	100	•	•	?	•	d
–	–	BENZOTRICHLORIDE, CHLORINATED TOLUENES (PRODUCTION OF)	–	–	–	•	–	–	–
98-88-4	–	BENZOYL CHLORIDE	1000	–	–	–	•	•	–
94-36-0	–	BENZOYL PEROXIDE	–	–	–	•	•	–	–
56-55-3	–	BENZO(A)ANTHRACENE	10	–	–	?	–	•	–
[illegible]-24-2	–	BENZO(GHI)PERYLENE	5000	–	–	–	–	•	–
[illegible]44-0	–	BENZO(J,K)FLUORENE	100	–	–	–	–	•	–
[illegible]-01-9	1,2-	BENZPHENANTHRENE	100	–	–	?	–	•	–
[illegible]-44-7	–	BENZYL CHLORIDE	100	500	•	•	•	•	d
[illegible]40-29-4	–	BENZYL CYANIDE	1	500	•	–	–	–	e,h
1694-09-3	–	BENZYL VIOLET	–	–	–	•	–	–	–
56-55-3	–	BENZ[A]ANTHRACENE	10	–	–	•	–	•	–
225-51-4	–	BENZ[C]ACRIDINE	100	–	–	–	–	•	–
56-49-5	–	BENZ[J]ACEANTHRYLENE, 1,2-DIHYDRO-3-METHYL	10	–	–	–	–	•	–
1302-52-9	–	BERYL	–	–	–	•	–	–	–
7440-41-7	–	BERYLLIUM	10	–	–	•	•	•	–
12770-60-2	–	BERYLLIUM ALUMINUM ALLOY	–	–	–	•	–	–	–
7440-41-7	–	BERYLLIUM AND COMPOUNDS	–	–	–	•	?	?	–
66104-24-3	–	BERYLLIUM CARBONATE	–	–	–	•	–	–	–
7787-47-5	–	BERYLLIUM CHLORIDE	1	–	–	•	–	•	–
–	–	BERYLLIUM COMPOUNDS (SEE REGULATION FOR DEFINITION)	–	–	–	–	•	•	–
7440-41-7	–	BERYLLIUM DUST	10	–	–	?	?	•	–
7787-49-7	–	BERYLLIUM FLUORIDE	1	–	–	•	–	•	–
13598-15-7	–	BERYLLIUM HYDROGEN PHOSPHATE	–	–	–	•	–	–	–
13327-32-7	–	BERYLLIUM HYDROXIDE	–	–	–	•	–	–	–
778-75-5	–	BERYLLIUM NITRATE	1	–	–	–	–	•	–
13597-99-4	–	BERYLLIUM NITRATE	1	–	–	–	–	•	–
1304-56-9	–	BERYLLIUM OXIDE	–	–	–	•	–	–	–
13598-00-0	–	BERYLLIUM SILICATE	–	–	–	•	–	–	–
13510-49-1	–	BERYLLIUM SULFATE	–	–	–	•	–	–	–
7787-56-6	–	BERYLLIUM SULFATE TETRAHYDRATE	–	–	–	•	–	–	–
58-89-9	GAMMA -	BHC	1	–	?	?	?	•	–
319-84-6	ALPHA-	BHC	10	–	–	?	–	•	–
319-85-7	BETA -	BHC	1	–	–	?	–	•	–
319-86-8	DELTA-	BHC	1	–	–	–	–	•	–
15271-41-7	–	BICYCLO[2.2.1]HEPTANE-2-CARBONITRILE, 5-CHLORO-	1	500/10000	•	–	–	–	e
1464-53-5	2,2'-	BIOXIRANE	10	–	?	?	?	•	–
92-52-4	–	BIPHENYL	–	–	–	•	•	–	–
92-87-5	(1,1'-	BIPHENYL)-4,4'DIAMINE	1	–	–	?	?	•	–
91-94-1	(1,1'-	BIPHENYL)-4,4'DIAMINE,3,3'DICHLORO-	1	–	–	?	?	•	–
[illegible]19-90-4	(1,1'-	BIPHENYL)-4,4'DIAMINE,3,3'DIMETHOXY-	100	–	–	?	?	•	–
[illegible]93-7	(1,1'-	BIPHENYL)-4,4'DIAMINE,3,3'DIMETHYL-	10	–	–	?	?	•	–

© Thompson Publishing Group, Inc. 1990

CAS or Other I.D. No.	CHEMICAL NAME		RQ	TPQ	EHS	OSH	TOXIC	CERCLA	NOTES
[illegible]	–	BIS (2-CHLOROETHYL) ETHER	10	–	?	?	•	•	–
108-60-1	–	BIS (2-CHLOROISOPROPYL) ETHER	1000	–	–	–	?	•	–
108-60-1	–	BIS(2-CHLORO-1-METHYLETHYL) ETHER	–	–	–	–	•	?	–
111-91-1	–	BIS(2-CHLOROETHOXY) METHANE	1000	–	–	–	–	•	–
103-23-1	–	BIS(2-ETHYLHEXYL)ADIPATE	–	–	–	–	•	–	–
117-81-7	–	BIS(2-ETHYLHEXYL)PTHALATE	100	–	–	?	?	•	–
542-88-1	–	BIS(CHLOROMETHYL) ETHER	1	–	?	•	•	•	–
534-07-6	–	BIS(CHLOROMETHYL) KETONE	1	10/10000	•	–	–	–	•
137-26-8	–	BIS(DIMETHYLTHIOCARBAMOYL) DISULFIDE	10	–	–	?	–	•	–
542-88-1	–	BIS-CHLOROMETHYL ETHER (BCME)	–	–	?	•	?	?	–
154-93-8	–	BISCHLOROETHYL NITROSOUREA (BCNU)	–	–	–	•	–	–	–
1304-82-1	–	BISMUTH TELLURIDE	–	–	–	•	–	–	–
1304-82-1	–	BISMUTH TELLURIDE (SE-DOPED)	–	–	–	•	–	–	–
4044-65-9	–	BITOSCANATE	1	500/10000	•	–	–	–	•
–	–	BITUMENS (PETROLEUM-DERIVED), AIR-REFINED - EXTRACTS	–	–	–	•	–	–	–
–	–	BITUMENS (PETROLEUM-DERIVED), STEAM-REFINED - EXTRACTS	–	–	–	•	–	–	–
1330-43-4	–	BORATES, TETRA, SODIUM SALTS - ANHYDROUS	–	–	–	•	–	–	–
1303-96-4	–	BORATES, TETRA, SODIUM SALTS - DECAHYDRATE	–	–	–	•	–	–	–
12179-04-3	–	BORATES, TETRA, SODIUM SALTS - PENTAHYDRATE	–	–	–	•	–	–	–
1303-86-2	–	BORON OXIDE	–	–	–	•	–	–	–
10294-33-4	–	BORON TRIBROMIDE	–	–	–	•	–	–	–
10294-34-5	–	BORON TRICHLORIDE	1	500	•	–	–	–	•
7637-07-2	–	BORON TRIFLUORIDE	1	500	•	•	–	–	•
353-42-4	–	BORON TRIFLUORIDE COMPOUND WITH METHYL ETHER (1:1)	1	1000	•	–	–	–	•
314-40-9	–	BROMACIL	–	–	–	•	–	–	–
28772-56-7	–	BROMADIOLONE	1	100/10000	•	–	–	–	•
7726-95-6	–	BROMINE	1	500	•	•	–	–	cJ
506-68-3	–	BROMINE CYANIDE	1000	–	?	–	–	•	–
7789-30-2	–	BROMINE PENTAFLUORIDE	–	–	–	•	–	–	–
598-31-2	–	BROMOACETONE	1000	–	–	–	–	•	–
75-25-2	–	BROMOFORM	100	–	–	•	?	•	–
75-25-2	–	BROMOFORM (TRIBROMOMETHANE)	–	–	–	?	•	?	–
74-83-9	–	BROMOMETHANE (METHYL BROMIDE)	–	–	?	?	•	?	–
101-55-3	4-	BROMOPHENYL PHENYL ETHER	100	–	–	–	–	•	–
357-57-3	–	BRUCINE	100	–	–	–	–	•	y
106-99-0	1,3-	BUTADIENE	–	–	–	•	•	–	–
87-68-3	1,3-	BUTADIENE, 1,1,2,3,4,4-HEXACHLORO-	1	–	–	–	–	•	–
924-16-3	1-	BUTANAMINE, N-BUTYL-N-NITROSO-	10	–	–	?	?	•	–
106-97-8	–	BUTANE	–	–	–	•	–	–	–
55-98-1	1,4-	BUTANEDIOL DIMETHANESULPHONATE	–	–	–	•	–	–	–
303-34-4	2-	BUTANOIC ACID, 2-METHYL-, 7- [[2,3-DIHYDROXY-2-(1-METHOXYETHYL...	10	–	–	?	–	•	–
[illegible]	1-	BUTANOL	5000	–	–	?	?	•	–
78-93-3	2-	BUTANONE	5000	–	–	?	?	•	–
1338-23-4	2-	BUTANONE PEROXIDE	10	–	–	?	–	•	–
123-73-9	2-	BUTENAL	100	–	?	?	–	•	–
4170-30-3	2-	BUTENAL	100	–	?	–	–	•	–
764-41-0	2-	BUTENE, 1,4-DICHLORO-	1	–	–	–	–	•	–
111-76-2	2-	BUTOXYETHANOL	–	–	–	•	–	–	–
105-46-4	SEC-	BUTYL ACETATE	5000	–	–	•	–	•	–
110-19-0	ISO-	BUTYL ACETATE	5000	–	–	?	–	•	–
123-86-4	N-	BUTYL ACETATE	–	–	–	•	–	?	–
123-86-4	–	BUTYL ACETATE	5000	–	–	?	–	•	–
540-88-5	TERT-	BUTYL ACETATE	5000	–	–	•	–	•	–
141-32-2	–	BUTYL ACRYLATE	–	–	–	•	•	–	–
71-36-3	N-	BUTYL ALCOHOL	5000	–	–	•	•	•	–
75-65-0	TERT-	BUTYL ALCOHOL	–	–	–	•	•	–	–
78-92-2	SEC-	BUTYL ALCOHOL	–	–	–	•	•	–	–
85-68-7	–	BUTYL BENZYL PHTHALATE	100	–	–	–	•	•	–
1189-85-1	TERT-	BUTYL CHROMATE, AS (CRO3)	–	–	–	•	–	–	–
2426-08-6	N-	BUTYL GLYCIDYL ETHER (BGE)	–	–	–	•	–	–	–
138-22-7	N-	BUTYL LACTATE	–	–	–	•	–	–	–
109-79-5	–	BUTYL MERCAPTAN	–	–	–	•	–	–	–
126-73-8	–	BUTYL PHOSPHATE	–	–	–	•	–	–	–

C[illegible] or Other I.D. No.	CHEMICAL NAME		RQ	TPQ	EHS	OSH	TOXIC	CERCLA	NOTES
84-74-2	N-	BUTYL PHTHALATE	10	–	–	?	?	•	–
98-51-1	P-TERT-	BUTYL TOLUENE	–	–	–	•	–	–	–
75-64-9	TERT-	BUTYLAMINE	1000	–	–	–	–	•	–
78-81-9	ISO-	BUTYLAMINE	1000	–	–	–	–	•	–
109-73-9	–	BUTYLAMINE	1000	–	–	•	–	•	–
513-49-5	SEC-	BUTYLAMINE	1000	–	–	–	–	•	–
13952-84-6	SEC-	BUTYLAMINE	1000	–	–	–	–	•	–
106-88-7	1,2-	BUTYLENE OXIDE	–	–	–	–	•	–	–
89-72-5	O-SEC-	BUTYLPHENOL	–	–	–	•	–	–	–
123-72-8	–	BUTYRALDEHYDE	–	–	–	–	•	–	–
79-31-2	ISO-	BUTYRIC ACID	5000	–	–	–	–	•	–
107-92-6	–	BUTYRIC ACID	5000	–	–	–	–	•	–
3068-88-0	BETA-	BUTYROLACTONE	–	–	–	•	–	–	–
4680-78-8	–	C.I. ACID GREEN 3	–	–	–	–	•	–	–
569-64-2	–	C.I. BASIC GREEN 4	–	–	–	–	•	–	–
989-38-8	–	C.I. BASIC RED 1	–	–	–	–	•	–	–
1937-37-7	–	C.I. DIRECT BLACK 38	–	–	–	•	•	–	–
72-57-1	–	C.I. DIRECT BLUE 14	–	–	–	•	–	?	–
2602-46-2	–	C.I. DIRECT BLUE 6	–	–	–	•	•	–	–
16071-86-6	–	C.I. DIRECT BROWN 95	–	–	–	•	•	–	–
82-28-0	–	C.I. DISPERSE ORANGE 11	–	–	–	•	?	–	–
2832-40-8	–	C.I. DISPERSE YELLOW 3	–	–	–	–	•	–	–
81-88-9	–	C.I. FOOD RED 15	–	–	–	–	•	–	–
3761-53-3	–	C.I. FOOD RED 5	–	–	–	?	•	–	–
2646-17-5	–	C.I. SOLVENT ORANGE 2	–	–	–	•	–	–	–
3118-97-6	–	C.I. SOLVENT ORANGE 7	–	–	–	–	•	–	–
842-07-9	–	C.I. SOLVENT YELLOW 14	–	–	–	–	•	–	–
97-56-3	–	C.I. SOLVENT YELLOW 3	–	–	–	?	•	–	–
492-80-8	–	C.I. SOLVENT YELLOW 34 (AURAMINE)	1	–	–	•	•	•	–
128-66-5	–	C.I. VAT YELLOW 4	–	–	–	–	•	–	–
[illegible]-60-5	–	CACODYLIC ACID	1	–	–	–	–	•	–
[illegible]43-9	–	CADMIUM	10	–	–	•	•	•	–
[illegible]0-8	–	CADMIUM ACETATE	10	–	–	–	–	•	–
[illegible]42-6	–	CADMIUM BROMIDE	10	–	–	–	–	•	–
[illegible]5-64-2	–	CADMIUM CHLORIDE	10	–	–	•	–	•	–
[illegible]	–	CADMIUM COMPOUNDS (SEE REGULATION FOR DEFINITION)	–	–	–	–	•	•	–
7440-43-9	–	CADMIUM DUST	–	–	–	•	?	?	–
7440-43-9	–	CADMIUM FUME	–	–	–	•	?	?	–
1306-19-0	–	CADMIUM OXIDE	1	100/10000	•	•	–	–	•
1306-19-0	–	CADMIUM OXIDE, FUME, AS CD	–	–	?	•	–	–	–
1306-19-0	–	CADMIUM OXIDE, PRODUCTION	–	–	?	•	–	–	–
7440-43-9	–	CADMIUM SALTS	–	–	–	•	?	?	–
[illegible]3-93-0	–	CADMIUM STEARATE	1	1000/10000	•	–	–	–	c,d
10124-36-4	–	CADMIUM SULFATE	–	–	–	•	–	–	–
1306-[illegible]-6	–	CADMIUM SULFIDE	–	–	–	•	•	–	–
7440-43-9	–	CADMIUM COMPOUNDS	–	–	–	•	?	?	–
7778-44-1	–	CALCIUM ARSENATE	1	500/10000	•	–	–	•	d
52740-16-6	–	CALCIUM ARSENITE	1	–	–	–	–	•	–
75-20-7	–	CALCIUM CARBIDE	10	–	–	–	–	•	–
1317-65-3	–	CALCIUM CARBONATE/MARBLE	–	–	–	•	–	–	–
13765-19-0	–	CALCIUM CHROMATE	10	–	–	•	–	•	–
13765-19-0	–	CALCIUM CHROMATE, SINTERED	–	–	–	•	–	?	–
156-62-7	–	CALCIUM CYANAMIDE	–	–	–	•	•	–	–
592-01-8	–	CALCIUM CYANIDE	10	–	–	–	–	•	–
26264-06-2	–	CALCIUM DODECYLBENZENE SULFONATE	1000	–	–	–	–	•	–
1305-62-0	–	CALCIUM HYDROXIDE	–	–	–	•	–	–	–
7778-54-3	–	CALCIUM HYPOCHLORITE	10	–	–	–	–	•	–
1305-78-8	–	CALCIUM OXIDE	–	–	–	•	–	–	–
1344-95-2	–	CALCIUM SILICATE	–	–	–	•	–	–	–
8001-35-2	–	CAMPHECHLOR	1	500/10000	•	?	?	?	d
8001-35-2	–	CAMPHENE, OCTACHLORO-	1	–	?	?	?	•	–
76-22-2	–	CAMPHOR	–	–	–	•	–	–	–
56-25-7	–	CANTHARIDIN	1	100/10000	•	–	–	–	•
105-60-2	–	CAPROLACTAM	–	–	–	•	–	–	–
105-60-2	–	CAPROLACTAM, DUST	–	–	–	•	–	–	–
105-60-2	–	CAPROLACTAM, VAPOR AND AEROSOL	–	–	–	•	–	–	–
2425-06-1	–	CAPTAFOL	–	–	–	•	–	–	–
133-06-2	–	CAPTAN	10	–	–	•	?	•	–

© Thompson Publishing Group, Inc. 1990

CAS or Other I.D. No.	CHEMICAL NAME		RQ	TPQ	EHS	OSH	TOXIC	CERCLA	NOTES
[illegible]-06-3	–	CAPTAN [1H-ISOINDOLE-1,3(2H)-DIONE,3A,4,7,7A-TETRAHYDRO-2-[(TRICHLOROM	10	–	–	•	•	•	–
51-83-2	–	CARBACHOL CHLORIDE	1	500/10000	•	–	–	–	e
51-79-6	–	CARBAMIC ACID, ETHYL ESTER	100	–	–	?	?	•	–
26419-73-8	–	CARBAMIC ACID, METHYL-,0-[(2,4-DIMETHYL-	1	100/10000	•	–	–	–	e
615-53-2	–	CARBAMIC ACID, METHYLNITROSO-, ETHYL ESTER	1	–	–	?	–	•	–
79-44-7	–	CARBAMIC CHLORIDE, DIMETHYL-	1	–	–	?	?	•	–
759-73-9	–	CARBAMIDE, N-ETHYL-N-NITROSO-	1	–	–	?	?	•	–
684-93-5	–	CARBAMIDE, N-METHYL-N-NITROSO-	1	–	–	?	?	•	–
630-10-4	–	CARBAMIMIDOSELENOIC ACID	1000	–	–	–	–	•	–
2303-16-4	–	CARBAMOTHIOIC ACID, BIS(1-METHYLETHYL)-, S(2,3-DICHLORO-2-PROPENYL)ESTER	100	–	–	–	?	•	–
63-25-2	–	CARBARYL	100	–	–	•	?	•	–
63-25-2	–	CARBARYL [1-NAPHTHALENOL, METHYLCARBAMATE]	100	–	–	•	•	•	–
1563-66-2	–	CARBOFURAN	10	10/10000	•	•	–	•	–
75-15-0	–	CARBON BISULFIDE	100	–	?	?	?	•	–
1333-86-4	–	CARBON BLACK	–	–	–	•	–	–	–
1333-86-4	–	CARBON BLACKS, SOLVENT (BENZENE) EXTRACTS	–	–	–	•	–	–	–
124-38-9	–	CARBON DIOXIDE	–	–	–	•	–	–	–
75-15-0	–	CARBON DISULFIDE	100	10000	•	•	•	•	l
630-08-0	–	CARBON MONOXIDE	–	–	–	•	–	–	–
353-50-4	–	CARBON OXYFLUORIDE	1000	–	–	?	–	•	–
558-13-4	–	CARBON TETRABROMIDE	–	–	–	•	–	–	–
56-23-5	–	CARBON TETRACHLORIDE	10	–	–	•	•	•	–
6533-73-9	–	CARBONIC ACID, DITHALLIUM(I) SALT	100	100/10000	?	–	–	•	ch
3333-67-3	–	CARBONIC ACID, NICKEL SALT	–	–	–	•	–	–	–
463-58-1	–	CARBONL SULFIDE	–	–	–	–	•	–	–
79-22-1	–	CARBONOCHLORIDIC ACID, METHYL ESTER	1000	–	?	–	–	•	–
75-44-5	–	CARBONYL CHLORIDE	10	–	?	?	?	•	–
353-50-4	–	CARBONYL FLUORIDE	1000	–	–	•	–	•	–
786-19-6	–	CARBOPHENOTHION	1	500	•	–	–	–	e
9000-07-1	–	CARRAGEENAN (DEGRADED)	–	–	–	•	–	–	–
120-80-9	–	CATECHOL	–	–	–	•	•	–	–
120-80-9	–	CATECHOL (PYROCATECHOL)	–	–	–	•	?	–	–
9004-34-6	–	CELLULOSE (PAPER FIBER)	–	–	–	•	–	–	–
21351-79-1	–	CESIUM HYDROXIDE	–	–	–	•	–	–	–
–	–	CHEMOTHERAPY FOR LYMPHOMAS (INCLUDING MOPP), CERTAIN COMBINED	–	–	–	•	–	–	–
75-87-6	–	CHLORAL	5000	–	–	–	–	•	–
133-90-4	–	CHLORAMBEN [BENZOIC ACID, 3-AMINO-2,5-DICHLORO-]	–	–	–	–	•	–	–
305-03-3	–	CHLORAMBUCIL	10	–	–	•	–	•	–
56-75-7	–	CHLORAMPHENICOL	–	–	–	•	–	–	–
57-74-9	–	CHLORDANE	1	1000	•	•	?	•	d
57-74-9	–	CHLORDANE, ALPHA & GAMMA ISOMERS	1	–	?	?	?	•	–
–	–	CHLORDANE (TECHNICAL MIXTURE AND METABOLITES)	–	–	–	–	–	•	–
57-74-9	–	CHLORDANE [4,7-METHANOINDAN,1,2,4,5,6,7,8,8-OCTACHLORO-2,3,3A,4,7,7A-H	1	1000	•	•	•	•	d
57-74-9	–	CHLORDANE, TECHNICAL	1	–	?	?	?	•	–
143-50-0	–	CHLORDECONE (KEPONE)	–	–	–	•	–	?	–
470-90-6	–	CHLORFENVINFOS	1	500	•	–	–	–	e
–	–	CHLORINATED BENZENES	–	–	–	–	–	•	–
8001-35-2	–	CHLORINATED CAMPHENE	–	–	?	•	?	?	–
55720-99-5	–	CHLORINATED DIPHENYL OXIDE	–	–	–	•	–	–	–
–	–	CHLORINATED ETHANES	–	–	–	–	–	•	–
–	–	CHLORINATED NAPHTHALENE	–	–	–	–	–	•	–
–	–	CHLORINATED PHENOLS	–	–	–	–	–	•	–
7782-50-5	–	CHLORINE	10	100	•	•	•	•	–
506-77-4	–	CHLORINE CYANIDE	10	–	–	?	–	•	–
10049-04-4	–	CHLORINE DIOXIDE	–	–	–	•	•	–	–
7790-91-2	–	CHLORINE TRIFLUORIDE	–	–	–	•	–	–	–
24934-91-6	–	CHLORMEPHOS	1	500	•	–	–	–	e

CAS or Other I.D. No.	CHEMICAL NAME		RQ	TPQ	EMS	OSH	TOXIC	CERCLA	NOTES
999-81-5	–	CHLORMEQUAT CHLORIDE	1	100/10000	•	–	–	–	ab
494-03-1	–	CHLORNAPHAZINE	100	–	–	•	–	•	–
600-25-9	1-	CHLORO-1-NITROPROPANE	–	–	–	•	–	–	–
59-50-7	P-	CHLORO-M-CRESOL	5000	–	–	–	–	•	–
59-50-7	4-	CHLORO-M-CRESOL	5000	–	–	–	–	•	–
95-83-0	4-	CHLORO-O-PHENYLENEDIAMINE	–	–	–	•	–	–	–
95-69-2	P-	CHLORO-O-TOLUIDINE	–	–	–	•	–	–	–
3165-93-3	4-	CHLORO-O-TOLUIDINE, HYDROCHLORIDE	100	–	–	–	–	•	–
107-20-0	–	CHLOROACETALDEHYDE	1000	–	–	•	–	•	–
79-11-8	–	CHLOROACETIC ACID	1	100/10000	•	–	•	–	•
532-27-4	2-	CHLOROACETOPHENONE	–	–	–	?	•	–	–
532-27-4	ALPHA-	CHLOROACETOPHENONE	–	–	–	•	?	–	–
79-04-9	–	CHLOROACETYL CHLORIDE	–	–	–	•	–	–	•
–	–	CHLOROALKYL ETHERS	–	–	–	–	–	•	–
106-47-8	P-	CHLOROANILINE	1000	–	–	–	–	•	–
108-90-7	–	CHLOROBENZENE	100	–	–	•	•	•	–
510-15-6	–	CHLOROBENZILATE (BENZENEACETIC ACID,4-CHLORO-ALPHA.-(4-CHLOROPHENYL)	10	–	–	–	•	•	–
2698-41-1	O-	CHLOROBENZYLIDENE MALONONITRILE (OCMB)	–	–	–	•	–	–	–
74-97-5	–	CHLOROBROMOMETHANE	–	–	–	•	–	–	–
124-48-1	–	CHLORODIBROMOMETHANE	100	–	–	–	–	•	–
75-45-6	–	CHLORODIFLUOROMETHANE	–	–	–	•	–	–	–
53469-21-9	–	CHLORODIPHENYL (42 PERCENT CHLORINE)	–	–	–	•	–	?	–
11097-69-1	–	CHLORODIPHENYL (54 PERCENT CHLORINE)	–	–	–	•	–	?	–
[illegible]00-3	–	CHLOROETHANE	100	–	–	?	?	•	–
[illegible]0-3	–	CHLOROETHANE (ETHYL CHLORIDE)	–	–	–	?	•	?	–
[illegible]07-3	–	CHLOROETHANOL	1	500	•	?	–	–	•
[illegible]-11-2	–	CHLOROETHYL CHLOROFORMATE	1	1000	•	–	–	–	•
[illegible]-75-8	2-	CHLOROETHYL VINYL ETHER	1000	–	–	–	–	•	–
13010-47-4	1-(2-	CHLOROETHYL)-3-CYCLOHEXYL-1-NITROSOUREA (CCNU)	–	–	–	•	–	–	–
67-66-3	–	CHLOROFORM	10	10000	•	•	•	•	dl
74-87-3	–	CHLOROMETHANE (METHYL CHLORIDE)	–	–	–	?	•	?	–
542-88-1	–	CHLOROMETHYL ETHER	1	100	•	?	?	?	db
107-30-2	–	CHLOROMETHYL METHYL ETHER	10	100	•	•	•	•	cd
91-58-7	BETA-	CHLORONAPHTHALENE	5000	–	–	–	–	•	–
91-58-7	2-	CHLORONAPHTHALENE	5000	–	–	–	–	•	–
76-15-3	–	CHLOROPENTAFLUOROETHANE	–	–	–	•	–	–	–
3691-35-8	–	CHLOROPHACINONE	1	100/10000	•	–	–	–	•
95-57-8	2-	CHLOROPHENOL	100	–	–	–	–	•	–
95-57-8	O-	CHLOROPHENOL	100	–	–	–	–	•	–
–	–	CHLOROPHENOLS (OCCUPATIONAL EXPOSURE TO)	–	–	–	•	–	–	–
–	–	CHLOROPHENOLS (SEE REGULATION FOR DEFINITION)	–	–	–	–	•	–	–
7005-72-3	4-	CHLOROPHENYL PHENYL ETHER	5000	–	–	–	–	•	–
5344-82-1	1-(O-	CHLOROPHENYLTHIOUREA	100	–	?	–	–	•	–
76-06-2	–	CHLOROPICRIN	–	–	–	•	–	–	–
126-99-8	–	CHLOROPRENE	–	–	–	•	•	–	–
542-76-7	3-	CHLOROPROPIONITRILE	1000	–	?	–	–	•	–
2039-87-4	O-	CHLOROSTYRENE	–	–	–	•	–	–	–
7790-94-5	–	CHLOROSULFONIC ACID	1000	–	–	–	–	•	–
1897-45-6	–	CHLOROTHALONIL (1,3-BENZENEDICARBONITRILE, 2,4,5,6-TETRACHLORO-)	–	–	–	–	•	–	–
95-49-8	O-	CHLOROTOLUENE	–	–	–	•	–	–	–
1982-47-4	–	CHLOROXURON	1	500/10000	•	–	–	–	•
2921-88-2	–	CHLORPYRIFOS	1	–	–	•	–	•	–
21923-23-9	–	CHLORTHIOPHOS	1	500	•	–	–	–	db
1066-30-4	–	CHROMIC ACETATE	1000	–	–	–	–	•	–
7738-94-5	–	CHROMIC ACID	10	–	–	–	–	•	–
11115-74-5	–	CHROMIC ACID	10	–	–	–	–	•	–
–	–	CHROMIC ACID AND CHROMATES	–	–	–	•	–	–	–
[illegible]65-19-0	–	CHROMIC ACID HCCRO4, CALCIUM SALT	10	–	–	?	–	•	–
[illegible]82-0	–	CHROMIC ANHYDRIDE	–	–	–	•	–	–	–
[illegible]25-73-7	–	CHROMIC CHLORIDE	1	1/10000	•	–	–	–	•
[illegible]01-53-8	–	CHROMIC SULFATE	1000	–	–	–	–	•	–

©Thomson Publishing Group, Inc. 1990

CAS or Other I.D. No.	CHEMICAL NAME		RQ	TPQ	EHS	OSH	TOXIC	CERCLA	NOTES
1308-31-2	-	CHROMITE ORE PROCESSING (CHROMATE)	-	-	-	•	-	-	-
7440-47-3	-	CHROMIUM	5000	-	-	•	•	•	-
7440-47-3	-	CHROMIUM (II) COMPOUNDS	-	-	-	•	?	?	-
7440-47-3	-	CHROMIUM (III) COMPOUNDS	-	-	-	•	?	?	-
7440-47-3	-	CHROMIUM (VI) COMPOUNDS, CERTAIN WATER INSOLUBLE	-	-	-	•	?	?	-
7440-47-3	-	CHROMIUM (VI) COMPOUNDS, WATER SOLUBLE	-	-	-	•	?	?	-
-	-	CHROMIUM COMPOUNDS (SEE REGULATION FOR DEFINITION)	-	-	-	-	•	•	-
7440-47-3	-	CHROMIUM INSOLUBLE SALTS	-	-	-	•	?	?	-
1333-82-0	-	CHROMIUM TRIOXIDE	-	-	-	•	-	-	-
1333-82-0	-	CHROMIUM TRIOXIDE, SINTERED	-	-	-	•	-	-	-
7440-47-3	-	CHROMIUM, COMPOUNDS	-	-	-	•	?	?	-
7440-47-3	-	CHROMIUM, SOLUBLE CHROMIC, CHROMOUS SALTS	-	-	-	•	?	?	-
10049-05-5	-	CHROMOUS CHLORIDE	1000	-	-	-	-	•	-
14977-61-8	-	CHROMYL CHLORIDE	-	-	-	•	-	-	-
218-01-9	-	CHRYSENE	100	-	-	•	-	•	-
15663-27-1	-	CISPLATIN	-	-	-	•	-	-	-
6358-53-8	-	CITRUS RED NO. 2	-	-	-	•	-	-	-
2971-90-6	-	CLOPIDOL	-	-	-	•	-	-	-
-	-	COAL DUST (RESPIRABLE FRACTION LESS THAN 5% SIO2)	-	-	-	•	-	-	-
-	-	COAL DUST (RESPIRABLE FRACTION MORE THAN 5% SIO2)	-	-	-	•	-	-	-
-	-	COAL SOOT - EXTRACTS	-	-	-	•	-	-	-
8007-45-2	-	COAL TAR PITCH VOLATILES (BENZENE SOLUBLE FRACTION)	-	-	-	•	-	-	-
65996-93-2	-	COAL TAR PITCHES	-	-	-	•	-	-	-
8007-45-2	-	COAL TARS	-	-	-	•	-	-	-
7440-48-4	-	COBALT	-	-	-	•	•	-	-
10210-68-1	-	COBALT CARBONYL	1	10/10000	•	•	-	-	e,h
-	-	COBALT COMPOUNDS (SEE REGULATION FOR DEFINITION)	-	-	-	-	•	-	-
16842-03-8	-	COBALT HYDROCARBONYL	-	-	-	•	-	-	-
7440-48-4	-	COBALT, METAL FUME AND DUST	-	-	-	•	?	-	-
62207-76-5	-	COBALT, [[2,2'-[1,2-ETHANEDIYLBIS(NITRILOMETHYL...	1	100/10000	•	-	-	-	e
11114-92-4	-	COBALT-CHROMIUM ALLOY	-	-	-	•	-	-	-
7789-43-7	-	COBALTOUS BROMIDE	1000	-	-	-	-	•	-
544-18-3	-	COBALTOUS FORMATE	1000	-	-	-	-	•	-
14017-41-5	-	COBALTOUS SULFAMATE	1000	-	-	-	-	•	-
-	-	COKE OVEN EMISSIONS	1	-	-	-	-	•	-
-	-	COKE OVEN EMISSIONS (POLYCYCLIC ORGANIC MATTER (POM)	-	-	-	•	-	-	-
64-86-8	-	COLCHICINE	1	10/10000	•	-	-	-	e,h
7440-50-8	-	COPPER	5000	-	-	•	•	•	-
12002-03-8	-	COPPER ACETOARSENITE	-	-	?	•	-	?	-
-	-	COPPER COMPOUNDS (SEE REGULATION FOR DEFINITION)	-	-	-	-	•	•	-
544-92-3	-	COPPER CYANIDE	10	-	-	-	-	•	-
7440-50-8	-	COPPER DUSTS AND MISTS	-	-	-	•	?	?	-
7440-50-8	-	COPPER FUME	-	-	-	•	?	?	-
-	-	COTTON DUST	-	-	-	•	-	-	-
-	-	COTTON DUST (RAW)	-	-	-	•	-	-	-
56-72-4	-	COUMAPHOS	10	100/10000	•	-	-	•	-
5836-29-3	-	COUMATETRALYL	1	500/10000	•	-	-	-	e
8001-58-9	-	CREOSOTE	1	-	-	•	•	•	-
8021-39-4	-	CREOSOTE, WOOD	-	-	-	•	-	-	-
120-71-8	P-	CRESIDINE	-	-	-	•	•	-	-
95-48-7	O-	CRESOL	1000	1000/10000	•	•	•	•	d
106-44-5	P-	CRESOL	1000	-	-	•	•	•	-
108-39-4	M-	CRESOL	1000	-	-	•	•	•	-
1319-77-3	-	CRESOL (MIXED ISOMERS)	-	-	-	•	•	?	-
1319-77-3	-	CRESOL(S)	1000	-	-	•	?	•	-
95-48-7	O-	CRESYLIC ACID	1000	-	?	?	?	•	-
106-44-5	P-	CRESYLIC ACID	1000	-	-	?	?	•	-
108-39-4	M-	CRESYLIC ACID	1000	-	-	?	?	•	-
1319-77-3	-	CRESYLIC ACID	1000	-	-	?	?	•	-
535-89-7	-	CRIMIDINE	1	100/10000	•	-	-	-	e

CAS or Other No.		CHEMICAL NAME	RQ	TPQ	EHS	OSH	TOXIC	CERCLA	NOTES
14464-46-1	–	CRISTOBALITE (SILICA)	–	–	–	•	–	–	–
4170-30-3	–	CROTONALDEHYDE	100	1000	•	–	–	•	–
123-73-9	–	CROTONALDEHYDE (E)-	100	1000	•	•	–	•	–
299-86-5	–	CRUFOMATE	–	–	–	•	–	–	–
98-82-8	–	CUMENE	5000	–	–	•	•	•	–
80-15-9	–	CUMENE HYDROPEROXIDE	–	–	–	–	•	?	–
135-20-6	–	CUPFERRON	–	–	–	•	?	–	–
135-20-6	–	CUPFERRON [BENZENEAMINE, N-HYDROXY-N-NITROSO, AMMONIUM SALT]	–	–	–	•	•	–	–
142-71-2	–	CUPRIC ACETATE	100	–	–	–	–	•	–
12002-03-8	–	CUPRIC ACETOARSENITE	1	–	?	?	–	•	–
7447-39-4	–	CUPRIC CHLORIDE	10	–	–	–	–	•	–
3251-23-8	–	CUPRIC NITRATE	100	–	–	–	–	•	–
5893-66-3	–	CUPRIC OXALATE	100	–	–	–	–	•	–
7758-98-7	–	CUPRIC SULFATE	10	–	–	–	–	•	–
10380-29-7	–	CUPRIC SULFATE AMMONIATED	100	–	–	–	–	•	–
815-82-7	–	CUPRIC TARTRATE	100	–	–	–	–	•	–
420-04-2	–	CYANAMIDE	–	–	–	•	–	–	–
–	–	CYANIDE COMPOUNDS (SEE REGULATION FOR DEFINITION)	–	–	–	–	•	•	–
151-50-8	–	CYANIDES	–	–	?	•	–	?	–
57-12-5	–	CYANIDES (AS CN)	–	–	–	•	?	?	–
57-12-5	–	CYANIDES (SOLUABLE CYANIDE SALTS), NOT ELSEWHERE SPECIFIED	10	–	–	?	?	•	–
143-33-9	–	CYANIDES AS CN	–	–	?	•	–	?	–
460-19-5	–	CYANOGEN	100	–	–	•	–	•	–
506-68-3	–	CYANOGEN BROMIDE	1000	500/10000	•	–	–	•	–
[illegible]-77-4	–	CYANOGEN CHLORIDE	10	–	–	•	–	•	–
[illegible]-78-5	–	CYANOGEN IODIDE	1	1000/10000	•	–	–	–	•
136-26-2	–	CYANOPHOS	1	1000	•	–	–	–	•
5-14-9	–	CYANURIC FLUORIDE	1	100	•	–	–	–	•
14901-08-7	–	CYCASIN	–	–	–	•	–	–	–
106-51-4	1,4-	CYCLOHEXADIENEDIONE	10	–	–	?	?	•	–
110-82-7	–	CYCLOHEXANE	1000	–	–	•	•	•	–
58-89-8	–	CYCLOHEXANE, 1,2,3,4,5,6-HEXACHLORO-, (1 ALPHA, 2 ALPHA, 3 BETA, 4 ALPHA, 5 ALPHA, 6 BETA	1	–	?	?	?	•	–
108-93-0	–	CYCLOHEXANOL	–	–	–	•	–	–	–
108-94-1	–	CYCLOHEXANONE	5000	–	–	•	–	•	–
110-83-8	–	CYCLOHEXENE	–	–	–	•	–	–	–
66-81-9	–	CYCLOHEXIMIDE	1	100/10000	•	–	–	–	•
108-91-8	–	CYCLOHEXYLAMINE	1	10000	•	•	–	–	•
121-82-4	–	CYCLONITE	–	–	–	•	–	–	–
542-92-7	–	CYCLOPENTADIENE	–	–	–	•	–	–	–
77-47-4	1,3-	CYCLOPENTADIENE, 1,2,3,4,5,5-HEXACHLORO-	10	–	?	?	?	•	–
287-92-3	–	CYCLOPENTANE	–	–	–	•	–	–	–
50-18-0	–	CYCLOPHOSPHAMIDE	10	–	–	•	–	•	–
12121-70-5	–	CYHEXATIN	–	–	–	•	–	–	–
94-75-7	2,4-	D	–	–	–	•	?	?	–
94-75-7	2,4-	D ACID	100	–	–	?	?	•	–
94-11-1	2,4-	D ESTERS	100	–	–	–	–	•	–
94-79-1	2,4-	D ESTERS	100	–	–	–	–	•	–
94-80-4	2,4-	D ESTERS	100	–	–	–	–	•	–
1320-18-9	2,4-	D ESTERS	100	–	–	–	–	•	–
1928-38-7	2,4-	D ESTERS	100	–	–	–	–	•	–
1928-61-6	2,4-	D ESTERS	100	–	–	–	–	•	–
1929-73-3	2,4-	D ESTERS	100	–	–	–	–	•	–
2971-38-2	2,4-	D ESTERS	100	–	–	–	–	•	–
25168-26-7	2,4-	D ESTERS	100	–	–	–	–	•	–
53467-11-1	2,4-	D ESTERS	100	–	–	–	–	•	–
94-75-7	2,4-	D [ACETIC ACID, (2,4-DICHLOROPHENOXY)-]	–	–	–	•	•	?	–
94-75-7	2,4-	D, SALTS AND ESTERS	100	–	–	?	?	•	–
4342-03-4	–	DACARBAZINE	–	–	–	•	–	–	–
20830-81-3	–	DAUNOMYCIN	10	–	–	•	–	•	–
[illegible]-54-8	–	DDD	1	–	–	–	–	•	–
[illegible]-8	4,4'	DDD	1	–	–	–	–	•	–
[illegible]-55-9	–	DDE	1	–	–	–	–	•	–
[illegible]-55-9	4,4'	DDE	1	–	–	–	–	•	–
[illegible]-29-3	–	DDT	1	–	–	•	–	•	–

©Thomson Publishing Group, Inc. 1990

CAS No.		CHEMICAL NAME	RQ	TPQ	EHS	OSH	TOXIC	CERCLA	NOTES
50-29-3	4,4'	DDT	1	–	–	?	–	•	–
–	–	DDT AND METABOLITES	–	–	–	?	–	•	–
17702-41-9	–	DECABORANE	–	–	?	•	–	–	–
17702-41-9	–	DECABORANE(14)	1	500/10000	•	?	–	–	•
1163-19-5	–	DECABROMODIPHENYL OXIDE	–	–	–	–	•	–	–
8065-48-3	–	DEMETON	1	500	•	•	–	–	•
919-86-8	–	DEMETON-S-METHYL	1	500	•	–	–	–	•
117-81-7	–	DI(2-ETHYLHEXYL)PHTHALATE (DEHP)	–	–	–	•	•	?	–
84-74-2	–	DI-N-BUTYL PHTHALATE	10	–	–	?	?	•	–
117-84-0	–	DI-N-OCTYL PHTHALATE	5000	–	–	–	?	•	–
621-64-7	–	DI-N-PROPYLNITROSAMINE	10	–	–	?	?	•	–
117-81-7	–	DI-SEC. OCTYL PHTHALATE	–	–	–	•	?	?	–
123-42-2	–	DIACETONE ALCOHOL	–	–	–	•	•	–	–
613-35-4	N,N'-	DIACETYLBENZIDINE	–	–	–	•	–	–	–
10311-84-9	–	DIALIFOS	1	100/10000	•	–	–	–	•
2303-16-4	–	DIALLATE	100	–	–	–	?	•	–
2303-16-4	–	DIALLATE [CARBAMOTHIOIC ACID, BIS (1-METHYLETHYL)-, S-(2-3-DICHLORO-2-	100	–	–	–	•	•	–
302-01-2	–	DIAMINE	1	–	?	?	?	•	–
615-05-4	2,4-	DIAMINOANISOLE	–	–	–	–	•	–	–
39156-41-7	2,4-	DIAMINOANISOLE SULFATE	–	–	–	•	•	–	–
101-80-4	4,4'-	DIAMINODIPHENYL ETHER	–	–	–	•	•	–	–
95-80-7	2,4-	DIAMINOTOLUENE	–	–	–	•	•	?	–
95-80-7	–	DIAMINOTOLUENE	10	–	–	?	?	•	–
496-72-0	–	DIAMINOTOLUENE	10	–	–	–	–	•	–
823-40-5	–	DIAMINOTOLUENE	10	–	–	–	–	•	–
25376-45-8	–	DIAMINOTOLUENE	10	–	–	–	?	•	–
25376-45-8	–	DIAMINOTOLUENE (MIXED ISOMERS)	–	–	–	–	•	?	–
5333-41-5	–	DIAZINON	1	–	–	•	–	•	–
334-88-3	–	DIAZOMETHANE	–	–	–	•	•	–	–
53-70-3	1,2:5,6-	DIBENZANTHRACENE	1	–	–	•	–	•	–
192-65-4	–	DIBENZO(A,E)PYRENE	–	–	–	•	–	–	–
191-30-0	–	DIBENZO(A,L)PYRENE	–	–	–	•	–	–	–
194-59-2	7H-	DIBENZO(C,G)CARBAZOLE	–	–	–	•	–	–	–
132-64-9	–	DIBENZOFURAN	–	–	–	–	•	–	–
189-55-9	1,2:7,8-	DIBENZOPYRENE	10	–	–	?	–	•	–
53-70-3	–	DIBENZO(A)ANTHRACENE	1	–	–	?	–	•	–
189-64-0	–	DIBENZO(A,H)PYRENE	–	–	–	•	–	–	–
189-55-9	–	DIBENZO(A,I)PYRENE	10	–	–	•	–	?	–
226-36-8	–	DIBENZ(A,H)ACRIDINE	–	–	–	•	–	–	–
53-70-3	–	DIBENZ(A,H)ANTHRACENE	1	–	–	?	–	•	–
189-55-9	–	DIBENZ(A,I)PYRENE	10	–	–	?	–	•	–
224-42-0	–	DIBENZ(A,J)ACRIDINE	–	–	–	•	–	–	–
19287-45-7	–	DIBORANE	1	100	•	•	–	–	•
96-12-8	1,2-	DIBROMO-3-CHLOROPROPANE	1	–	–	•	?	•	–
96-12-8	1,2-	DIBROMO-3-CHLOROPROPANE (DBCP)	–	–	–	?	•	?	–
106-93-4	1,2-	DIBROMOETHANE (ETHYLENE DIBROMIDE)	–	–	–	•	•	?	–
107-66-4	–	DIBUTYL PHOSPHATE	–	–	–	•	–	–	–
84-74-2	–	DIBUTYL PHTHALATE	10	–	–	•	•	•	–
102-81-8	2-N-	DIBUTYLAMINOETHANOL	–	–	–	•	–	–	–
1918-00-9	–	DICAMBA	1000	–	–	–	–	•	–
1194-65-6	–	DICHLOBENIL	100	–	–	–	–	•	–
117-80-6	–	DICHLONE	1	–	–	–	–	•	–
594-72-9	1,1-	DICHLORO-1-NITROETHANE	–	–	–	•	–	–	–
764-41-0	1,4-	DICHLORO-2-BUTENE	1	–	–	–	–	•	–
28434-86-8	3,3'-	DICHLORO-4,4'-DIAMINODIPHENYL ETHER	–	–	–	•	–	–	–
118-52-5	1,3-	DICHLORO-5,5-DIMETHYLHYDANTOIN	–	–	–	•	–	–	–
23950-58-5	3,5-	DICHLORO-N-(1,1-DIMETHYL-2-PROPYNYL)BENZAMIDE	5000	–	–	–	–	•	–
609-20-1	2,6-	DICHLORO-PARA-PHENYLENEDIAMINE	–	–	–	•	–	–	–
7572-29-4	–	DICHLOROACETYLENE	–	–	–	•	–	–	–
95-50-1	1,2-	DICHLOROBENZENE	100	–	–	?	•	•	–
95-50-1	O-	DICHLOROBENZENE	100	–	–	•	?	•	–
106-46-7	P-	DICHLOROBENZENE	100	–	–	•	?	•	–
106-46-7	1,4-	DICHLOROBENZENE	100	–	–	?	•	•	–
541-73-1	1,3-	DICHLOROBENZENE	100	–	–	–	•	•	–
541-73-1	M-	DICHLOROBENZENE	100	–	–	–	?	•	–
25321-22-6	–	DICHLOROBENZENE (MIXED ISOMERS)	–	–	–	–	•	?	–
25321-22-6	–	DICHLOROBENZENE (MIXED)	100	–	–	–	?	•	–
91-94-1	3,3'-	DICHLOROBENZIDENE	1	–	–	•	?	•	–

CAS or Other I.D. No.	CHEMICAL NAME		RQ	TPQ	EHS	OSH	TOXIC	CERCLA	NOTES
–	–	DICHLOROBENZIDINE	–	–	–	?	?	•	–
91-94-1	3,3-	DICHLOROBENZIDINE	–	–	–	?	•	?	–
91-94-1	3,3'-	DICHLOROBENZIDINE (AND ITS SALTS)	–	–	–	•	?	?	–
91-94-1	3,3'-	DICHLOROBENZIDINE (DCB)	–	–	–	•	?	?	–
75-27-4	–	DICHLOROBROMOMETHANE	5000	–	–	–	•	•	–
110-57-6	TRANS-1,4-	DICHLOROBUTENE	1	500	•	–	–	–	•
75-71-8	–	DICHLORODIFLUOROMETHANE	5000	–	–	•	–	•	–
72-54-8	–	DICHLORODIPHENYL DICHLOROETHANE	1	–	–	–	–	•	–
50-29-3	–	DICHLORODIPHENYL TRICHLOROETHANE	1	–	–	?	–	•	–
75-34-3	1,1-	DICHLOROETHANE	1000	–	–	•	–	•	–
107-06-2	1,2-	DICHLOROETHANE	100	–	–	•	?	•	–
107-06-2	1,2-	DICHLOROETHANE (ETHYLENE DICHLORIDE)	–	–	–	?	•	?	•
111-44-4	–	DICHLOROETHYL ETHER	10	10000	•	•	?	•	d
75-35-4	1,1-	DICHLOROETHYLENE	100	–	–	•	?	•	–
156-60-5	1,2-TRANS-	DICHLOROETHYLENE	1000	–	–	–	–	•	–
540-59-0	1,2-	DICHLOROETHYLENE	–	–	–	•	•	–	–
75-43-4	–	DICHLOROFLUOROMETHANE	–	–	–	•	–	–	–
75-09-2	–	DICHLOROMETHANE (METHYLENE CHLORIDE)	1000	–	–	?	•	•	–
111-91-1	–	DICHLOROMETHOXYETHANE	1000	–	–	–	–	•	–
542-88-1	–	DICHLOROMETHYL ETHER	10	–	?	?	?	•	–
149-74-6	–	DICHLOROMETHYLPHENYLSILANE	1	1000	•	–	–	–	•
87-65-0	2,6-	DICHLOROPHENOL	100	–	–	–	–	•	–
120-83-2	2,4-	DICHLOROPHENOL	100	–	–	–	•	•	–
94-75-7	2,4-	DICHLOROPHENOXYACETIC ACID, SALTS AND ESTERS	100	–	–	?	?	•	–
696-28-6	–	DICHLOROPHENYLARSINE	1	–	?	–	–	•	–
87-5	1,2-	DICHLOROPROPANE	1000	–	–	?	•	•	–
99-9	1,1-	DICHLOROPROPANE	1000	–	–	–	–	•	–
2-28-9	1,3-	DICHLOROPROPANE	1000	–	–	–	–	•	–
638-19-7	–	DICHLOROPROPANE	1000	–	–	–	–	•	–
8003-19-8	–	DICHLOROPROPANE - DICHLOROPROPENE (MIXTURE)	100	–	–	–	–	•	–
542-75-6	1,3-	DICHLOROPROPENE	100	–	–	?	?	•	–
542-75-6	–	DICHLOROPROPENE	–	–	–	•	?	?	–
26952-23-8	–	DICHLOROPROPENE	100	–	–	–	–	•	–
78-88-6	2,3-	DICHLOROPROPENE (ISOMER)	100	–	–	–	•	•	–
26952-23-8	–	DICHLOROPROPENE(S)	100	–	–	–	–	•	–
75-99-0	2,2-	DICHLOROPROPIONIC ACID	5000	–	–	•	–	•	–
542-75-6	1,3-	DICHLOROPROPYLENE	–	–	–	?	•	?	–
1320-37-2	–	DICHLOROTETRAFLUOROETHANE	–	–	–	•	–	–	–
62-73-7	–	DICHLORVOS	10	1000	•	•	?	•	–
62-73-7	–	DICHLORVOS [PHOSPHORIC ACID, 2,2-DICHLOROETHENYL DIMETHYL ESTER]	10	1000	•	•	•	•	–
115-32-2	–	DICOFOL [BENZENEMETHANOL,4-CHLORO-ALPHA,-(4-CHLOROPHENYL)-ALPHA-(TRICHLOROMETHYL)-]	10	–	–	–	•	?	–
141-66-2	–	DICROTOPHOS	1	100	•	•	–	–	•
77-73-6	–	DICYCLOPENTADIENE	–	–	–	•	–	–	–
102-54-5	–	DICYCLOPENTADIENYL IRON	–	–	–	•	–	–	–
60-57-1	–	DIELDRIN	1	–	–	•	–	•	–
84-17-3	–	DIENOESTROL	–	–	–	•	–	–	–
1464-53-5	–	DIEPOXYBUTANE	1	500	•	•	•	?	d
1464-53-5	1,2:3,4-	DIEPOXYBUTANE	10	–	?	?	?	•	–
111-42-2	–	DIETHANOLAMINE	–	–	–	•	•	–	–
814-49-3	–	DIETHYL CHLOROPHOSPHATE	1	500	•	–	–	–	•
96-22-0	–	DIETHYL KETONE	–	–	–	•	–	–	–
297-97-2	O,O-	DIETHYL O-PYRAZINYL PHOSPHOROTHIOATE	100	–	?	–	–	•	–
84-66-2	–	DIETHYL PHTHALATE	1000	–	–	•	•	•	–
2286-56-2	O,O-	DIETHYL S-METHYL DITHIOPHOSPHATE	5000	–	–	–	–	•	–
298-04-4	O,O-	DIETHYL S-[2-(ETHYLTHIO)ETHYL] PHOSPHORODITHIOATE	1	–	?	?	–	•	–
64-67-5	–	DIETHYL SULPHATE	–	–	–	•	•	–	–
311-45-5	–	DIETHYL-P-NITROPHENYL PHOSPHATE	100	–	–	–	–	•	–
109-89-7	–	DIETHYLAMINE	100	–	–	•	–	•	•
3-37-8	2-	DIETHYLAMINOETHANOL	–	–	–	•	–	–	–
2-42-2	–	DIETHYLARSINE	1	–	–	–	–	•	–
142-64-2	–	DIETHYLCARBAMAZINE CITRATE	1	100/10000	•	–	–	–	•
22-91-1	1,4-	DIETHYLENE DIOXIDE	100	–	–	?	?	•	–

CAS or Other ID No.		CHEMICAL NAME	RQ	TPQ	EHS	OSH	TOXIC	CERCLA	NOTES
111-40-0	–	DIETHYLENE TRIAMINE	–	–	–	•	–	–	–
1615-80-1	1,2-	DIETHYLHYDRAZINE	–	–	–	•	–	?	–
1615-80-1	N,N'-	DIETHYLHYDRAZINE	10	–	–	?	–	•	–
56-53-1	–	DIETHYLSTILBESTROL	1	–	–	•	–	•	–
75-61-6	–	DIFLUORODIBROMOMETHANE	–	–	–	•	–	–	–
71-63-6	–	DIGITOXIN	1	100/10000	•	–	–	–	c,e
2238-07-5	–	DIGLYCIDYL ETHER	1	1000	•	?	–	–	e
2238-07-5	–	DIGLYCIDYL ETHER (DGE)	–	–	?	•	–	–	–
101-90-6	–	DIGLYCIDYL RESORCINAL ETHER	–	–	–	•	–	–	–
101-90-6	–	DIGLYCIDYL RESORCINAL ETHER (TECHNICAL GRADE)	–	–	–	•	–	–	–
20830-75-5	–	DIGOXIN	1	10/10000	•	–	–	–	e,h
123-33-1	1,2-	DIHYDRO-3,6-PYRIDAZINEDIONE	5000	–	–	–	–	•	–
94-58-6	–	DIHYDROSAFROLE	10	–	–	•	–	•	–
123-31-9	–	DIHYDROXYBENZENE	–	–	?	•	?	–	–
108-83-8	–	DIISOBUTYL KETONE	–	–	–	•	–	–	–
55-91-4	–	DIISOPROPYL FLUOROPHOSPHATE	100	–	?	–	–	•	–
108-18-9	–	DIISOPROPYLAMINE	–	–	–	•	–	–	–
115-26-4	–	DIMEFOX	1	500	•	–	–	–	e
309-00-2	1,4,5,8-	DIMETHANONAPHTHALENE,1,2,3,4,10,10-HEXACHLORO-1,4,4A,5,8,8A-HEXAHYDRO-,...	1	500/10000	•	•	•	•	d
465-73-6	1,4,5,8-	DIMETHANONAPHTHALENE, 1,2,3,4,10,10-HEXACHLORO-1,4,4A,8A-HEXAHYDRO-,...	1	–	?	–	–	•	–
60-57-1	2,7:3,6-	DIMETHANONOPHTH [2,3-B] OXIRENE,3,4,5,6,9,9-HEXACHLORO-1,4,4A,5,8A-HEXAHYDRO-,... (SEE DIELDRIN)	1	–	–	?	–	•	–
72-20-8	2,7:3,6-	DIMETHANONOPHTH [2,3-B] OXIRENE,3,4,5,6,9,9-HEXACHLORO-1,4,4A,5,8A-HEXAHYDRO-,... (SEE ENDRIN)	1	–	?	?	–	•	–
60-51-5	–	DIMETHOATE	10	500/10000	•	–	–	•	–
119-90-4	3,3'-	DIMETHOXYBENZIDINE	100	–	–	•	•	•	–
91-93-0	3,3'-	DIMETHOXYBENZIDINE-4,4'-DIISOCYANATE	–	–	–	•	–	–	–
39196-18-4	3,3-	DIMETHYL -1-(METHYLTHIO)-2-BUTANONE,O-[(METHYLAMINO)CARBONYL] OXIME	100	–	?	–	–	•	–
127-19-5	–	DIMETHYL ACETAMIDE	–	–	–	•	–	–	–
298-00-0	O,O-	DIMETHYL O-P-NITROPHENYL PHOSPHOROTHIOATE	100	–	?	?	–	•	–
2524-03-0	–	DIMETHYL PHOSPHOROCHLORIDOTHIOATE	1	500	•	–	–	–	e
131-11-3	–	DIMETHYL PHTHALATE	5000	–	–	•	•	•	–
77-78-1	–	DIMETHYL SULFATE	100	500	•	•	•	•	d
99-98-9	–	DIMETHYL-P-PHENYLENEDIAMINE	1	10/10000	•	–	–	–	e
124-40-3	–	DIMETHYLAMINE	1000	–	–	•	–	•	–
55738-54-0	TRANS-2(	DIMETHYLAMINO)METHYLIMINO)-5-(2-(5-NITRO-2-FURYL)VINYL)-1,3,4-OXADIAZO	–	–	–	•	–	–	–
60-11-7	4-	DIMETHYLAMINOAZOBENZENE	–	–	–	?	•	?	–
60-11-7	–	DIMETHYLAMINOAZOBENZENE	10	–	–	•	?	•	–
60-11-7	PARA-	DIMETHYLAMINOAZOBENZENE	–	–	–	•	?	?	–
121-69-7	N,N-	DIMETHYLANILINE	–	–	–	•	•	–	–
121-69-7	–	DIMETHYLANILINE	–	–	–	•	?	–	–
119-93-7	3,3'-	DIMETHYLBENZIDINE	10	–	–	?	?	•	–
119-93-7	3,3-	DIMETHYLBENZIDINE (O-TOLIDINE)	–	–	–	?	•	?	–
80-15-9	ALPHA, ALPHA-	DIMETHYLBENZYLHYDROPEROXIDE	10	–	–	–	?	•	–
57-97-6	7,12-	DIMETHYLBENZ[A]ANTHRACENE	1	–	–	–	–	•	–
79-44-7	–	DIMETHYLCARBOMOYL CHLORIDE	1	–	–	•	•	•	–
75-78-5	–	DIMETHYLDICHLOROSILANE	1	500	•	–	–	–	e,h
68-12-2	–	DIMETHYLFORMAMIDE	–	–	–	•	–	–	–
57-14-7	–	DIMETHYLHYDRAZINE	1	1000	•	?	?	?	d
57-14-7	1,1-	DIMETHYLHYDRAZINE	10	–	?	•	•	•	–
540-73-8	1,2-	DIMETHYLHYDRAZINE	1	–	–	•	–	•	–
62-75-9	–	DIMETHYLNITROSAMINE	1	–	?	?	?	•	–
122-09-8	ALPHA, ALPHA-	DIMETHYLPHENETHYLAMINE	5000	–	–	–	–	•	–
105-67-9	2,4-	DIMETHYLPHENOL	100	–	–	–	•	•	–
644-64-4	–	DIMETILAN	1	500/10000	•	–	–	–	e
148-01-6	–	DINITOLMIDE	–	–	–	•	–	–	–
534-52-1	–	DINITRO-O-CRESOL	–	–	?	•	?	?	–
534-52-1	4,6-	DINITRO-O-CRESOL	–	–	?	?	•	?	–
534-52-1	4,6-	DINITRO-O-CRESOL AND SALTS	10	–	?	?	?	•	–

CAS or Other No.		CHEMICAL NAME	RQ	TPQ	EHS	OSH	TOXIC	CERCLA	NOTES
131-89-5	4,6-	DINITRO-O-CYCLOHEXYLPHENOL	100	–	–	–	–	•	–
99-65-0	M-	DINITROBENZENE	100	–	–	•	•	•	–
100-25-4	P-	DINITROBENZENE	100	–	–	•	•	•	–
528-29-0	O-	DINITROBENZENE	100	–	–	•	•	•	–
25154-54-5	–	DINITROBENZENE (MIXED)	100	–	–	–	–	•	–
534-52-1	–	DINITROCRESOL	10	10/10000	•	?	?	?	–
51-28-5	2,4-	DINITROPHENOL	10	–	–	–	•	•	–
329-71-5	2,5-	DINITROPHENOL	10	–	–	–	–	•	–
573-56-8	2,6-	DINITROPHENOL	10	–	–	–	–	•	–
25550-58-7	–	DINITROPHENOL	10	–	–	–	–	•	–
121-14-2	2,4-	DINITROTOLUENE	10	–	–	–	•	•	–
606-20-2	2,6-	DINITROTOLUENE	100	–	–	–	•	•	–
610-39-9	3,4-	DINITROTOLUENE	10	–	–	–	•	•	–
25321-14-6	–	DINITROTOLUENE	10	–	–	•	•	•	–
88-85-7	–	DINOSEB	1000	100/10000	•	–	–	•	–
1420-07-1	–	DINOTERB	1	500/10000	•	–	–	–	•
117-84-0	N-	DIOCTYLPHTHALATE	–	–	–	–	•	?	–
123-91-1	1,4-	DIOXANE	100	–	–	•	•	•	–
123-91-1	–	DIOXANE	–	–	–	•	?	?	–
123-91-1	–	DIOXANE, TECHNICAL GRADE	–	–	–	•	?	?	–
78-34-2	–	DIOXATHION	1	500	•	•	–	–	•
82-66-6	–	DIPHACINONE	1	10/10000	•	–	–	–	•
122-66-7	1,2-	DIPHENYL HYDRAZINE (HYDRAZOBENZENE)	–	–	–	?	•	?	–
122-39-4	–	DIPHENYLAMINE	–	–	–	•	–	–	–
–	–	DIPHENYLHYDRAZINE	–	–	–	–	–	•	–
122-66-7	1,2-	DIPHENYLHYDRAZINE	10	–	–	•	?	•	–
[illegible]2-16-9	–	DIPHOSPHORAMIDE, OCTAMETHYL-	100	100	•	–	–	•	–
[illegible]-19-3	–	DIPROPYL KETONE	–	–	–	•	–	–	–
[illegible]84-7	–	DIPROPYLAMINE	5000	–	–	–	–	•	–
[illegible]90-94-8	–	DIPROPYLENE GLYCOL METHYL ETHER	–	–	–	•	–	–	–
[illegible]6-00-7	–	DIQUAT	1000	–	–	•	–	•	–
2764-72-9	–	DIQUAT	1000	–	–	–	–	•	–
1937-37-7	–	DIRECT BLACK 38, TECHNICAL GRADE	–	–	–	•	?	–	–
2602-46-2	–	DIRECT BLUE 6, TECHNICAL GRADE	–	–	–	•	?	–	–
16071-86-6	–	DIRECT BROWN 95, TECHNICAL GRADE	–	–	–	•	?	–	–
97-77-8	–	DISULFIRAM	–	–	–	•	–	–	–
298-04-4	–	DISULFOTON	1	500	•	•	–	•	–
128-37-0	2,6-	DITERT. BUTYL-P-CRESOL	–	–	–	•	–	–	–
514-73-8	–	DITHIAZANINE IODIDE	1	500/10000	•	–	–	–	•
541-53-7	2,4-	DITHIOBIURET	100	–	?	–	–	•	–
541-53-7	–	DITHIOBIURET	100	100/10000	•	–	–	?	–
3689-24-5	–	DITHIOPYROPHOSPHORIC ACID, TETRAETHYL ESTER	100	–	?	?	–	•	–
330-54-1	–	DIURON	100	–	–	•	–	•	–
108-57-6	–	DIVINYL BENZENE (BENZENE, 1,3-DIETHENYL-)	–	–	–	•	–	–	–
[illegible]	–	DODECYLBENZENESULFONIC ACID	1000	–	–	–	–	•	–
112-62-9	–	EMERY	–	–	–	•	–	–	–
316-42-7	–	EMETINE, DIHYDROCHLORIDE	1	1/10000	•	–	–	–	•
115-29-7	–	ENDOSULFAN	1	10/10000	•	•	–	•	–
959-98-8	ALPHA-	ENDOSULFAN	1	–	–	–	–	•	–
33213-65-9	BETA-	ENDOSULFAN	1	–	–	–	–	•	–
–	–	ENDOSULFAN AND METABOLITES	–	–	–	–	–	•	–
1031-07-8	–	ENDOSULFAN SULFATE	1	–	–	–	–	•	–
145-73-3	–	ENDOTHALL	1000	–	–	–	–	•	–
2778-04-3	–	ENDOTHION	1	500/10000	•	–	–	–	•
72-20-8	–	ENDRIN	1	500/10000	•	•	–	•	–
7421-93-4	–	ENDRIN ALDEHYDE	1	–	–	–	–	•	–
–	–	ENDRIN AND METABOLITES	–	–	–	–	–	•	–
13838-16-9	–	ENFLURANE	–	–	–	•	–	–	–
106-89-8	–	EPICHLOROHYDRIN	100	1000	•	•	•	•	–
51-43-4	–	EPINEPHRINE	1000	–	–	–	–	•	–
2104-64-5	–	EPN	1	100/10000	•	•	–	–	•
[illegible]-14-6	–	ERGOCALCIFEROL	1	1000/10000	•	–	–	–	•
17[illegible]-79-3	–	ERGOTAMINE TARTRATE	1	500/10000	•	–	–	–	•
50-28-2	–	ESTRADIOL	–	–	–	•	–	–	–
[illegible]07-0	–	ETHANAL	1000	–	–	?	?	•	–
[illegible]09-8	–	ETHANAMINE, 1,1-DIMETHYL-2-PHENYL	5000	–	–	–	–	•	–
[illegible]-18-5	–	ETHANAMINE, N-ETHYL-N-NITROSO	1	–	–	?	?	•	–
74-84-0	–	ETHANE	–	–	–	•	–	–	–
111-44-4	–	ETHANE, 1,1'-OXYBIS(2-CHLORO-	10	–	?	?	?	•	–
60-29-7	–	ETHANE, 1,1'-OXYBIS-	100	–	–	?	–	•	–

©Thomson Publishing Group, Inc. 1990

CAS or Other I.D. No.	CHEMICAL NAME		RQ	TPQ	EHS	OSH	TOXIC	CERCLA	NOTES
111-91-1	–	ETHANE, 1,1'-(METHYLENEBIS(OXY))BIS(2-CHLORO-	1000	–	–	–	–	•	–
630-20-6	–	ETHANE, 1,1,1,2-TETRACHLORO-	100	–	–	–	–	•	–
72-43-5	–	ETHANE, 1,1,1-TRICHLORO-2,2-BIS(P-METHOXYPHENYL)-	1	–	–	?	?	•	–
79-34-5	–	ETHANE, 1,1,2,2-TETRACHLORO-	100	–	–	•	?	•	–
79-00-5	–	ETHANE, 1,1,2-TRICHLORO-	100	–	–	?	?	•	–
75-34-3	–	ETHANE, 1,1-DICHLORO-	1000	–	–	?	–	•	–
106-93-4	–	ETHANE, 1,2-DIBROMO	1	–	–	?	?	•	–
107-06-2	–	ETHANE, 1,2-DICHLORO-	100	–	–	?	?	•	–
67-72-1	–	ETHANE, HEXACHLORO-	100	–	–	?	?	•	–
76-01-7	–	ETHANE, PENTACHLORO-	10	–	–	–	–	•	–
111-54-6	1,2-	ETHANEDIYLBISCARBAMODITHIOIC ACID	5000	–	–	–	–	•	–
75-05-8	–	ETHANENITRILE	5000	–	–	?	?	•	–
1622-32-8	–	ETHANESULFONYL CHLORIDE, 2-CHLORO-	1	500	•	–	–	–	•
62-55-5	–	ETHANETHIOAMIDE	10	–	–	?	?	•	–
10140-87-1	–	ETHANOL, 1,2-DICHLORO-, ACETATE	1	1000	•	–	–	–	•
1116-54-7	–	ETHANOL, 2,2'-(NITROSOIMINO)BIS	1	–	–	?	–	•	–
141-43-5	–	ETHANOLAMINE	–	–	–	•	–	–	–
96-86-2	–	ETHANONE, 1-PHENYL-	5000	–	–	–	–	•	–
75-36-5	–	ETHANOYL CHLORIDE	5000	–	–	–	–	•	–
4549-40-0	–	ETHENAMINE, N-METHYL-N-NITROSO-	10	–	–	?	?	•	–
127-18-4	–	ETHENE, 1,1,2,2-TETRACHLORO-	100	–	–	?	?	•	–
75-35-4	–	ETHENE, 1,1-DICHLORO-	100	–	–	?	?	•	–
110-75-8	–	ETHENE, 2-CHLOROETHOXY-	1000	–	–	–	–	•	–
75-01-4	–	ETHENE, CHLORO-	1	–	–	?	?	•	–
156-60-5	–	ETHENE, TRANS-1,2,DICHLORO-	1000	–	–	–	–	•	–
79-01-6	–	ETHENE, TRICHLORO	100	–	–	?	?	•	–
4549-40-0	–	ETHENYLAMINE, N-METHYL-N-NITROSO-	–	–	–	•	?	?	–
57-63-6	–	ETHINYLOESTRADIOL	–	–	–	•	–	–	–
563-12-2	–	ETHION	10	1000	•	•	–	•	–
13194-48-4	–	ETHOPROPHOS	1	1000	•	–	–	–	•
110-80-5	2-	ETHOXYETHANOL	1000	–	–	•	•	•	–
111-15-9	2-	ETHOXYETHYL ACETATE	–	–	–	•	–	–	–
141-78-6	–	ETHYL ACETATE	5000	–	–	•	–	•	–
140-88-5	–	ETHYL ACRYLATE	1000	–	–	•	•	•	–
64-17-5	–	ETHYL ALCOHOL	–	–	–	•	–	–	–
541-85-5	–	ETHYL AMYL KETONE	–	–	–	•	–	–	–
100-41-4	–	ETHYL BENZENE	–	–	–	•	•	?	–
74-96-4	–	ETHYL BROMIDE	–	–	–	•	–	–	–
106-35-4	–	ETHYL BUTYL KETONE	–	–	–	•	–	–	–
51-79-6	–	ETHYL CARBAMATE	–	–	–	•	?	?	–
51-79-6	–	ETHYL CARBAMATE (URETHANE)	100	–	–	?	?	•	–
75-00-3	–	ETHYL CHLORIDE	–	–	–	•	?	?	–
541-41-3	–	ETHYL CHLOROFORMATE	–	–	–	–	•	–	–
107-12-0	–	ETHYL CYANIDE	10	–	?	–	–	•	–
60-29-7	–	ETHYL ETHER	100	–	–	•	–	•	–
109-94-4	–	ETHYL FORMATE	–	–	–	•	–	–	–
75-08-1	–	ETHYL MERCAPTAN	–	–	–	•	–	–	–
97-63-2	–	ETHYL METHACRYLATE	1000	–	–	–	–	•	–
62-50-0	–	ETHYL METHANESULFONATE	1	–	–	•	–	•	–
78-10-4	–	ETHYL SILICATE	–	–	–	•	–	–	–
75-04-7	–	ETHYLAMINE	–	–	–	•	–	?	–
100-41-4	–	ETHYLBENZENE	1000	–	–	•	?	•	–
538-07-8	–	ETHYLBIS(2-CHLOROETHYL)AMINE	1	500	•	–	–	–	[illegible]
74-85-1	–	ETHYLENE	–	–	–	•	•	–	–
107-07-3	–	ETHYLENE CHLOROHYDRIN	–	–	?	•	–	–	–
106-93-4	–	ETHYLENE DIBROMIDE	1	–	–	•	?	•	–
107-06-2	–	ETHYLENE DICHLORIDE	100	–	–	•	?	•	–
371-62-0	–	ETHYLENE FLUOROHYDRIN	1	10	•	–	–	–	[illegible]
107-21-1	–	ETHYLENE GLYCOL	–	–	–	•	•	–	–
628-96-6	–	ETHYLENE GLYCOL DINITRATE	–	–	–	•	–	–	–
–	–	ETHYLENE GLYCOL DINITRATE AND NITROGLYCERIN	–	–	–	•	–	–	–
110-80-5	–	ETHYLENE GLYCOL MONOETHYL ETHER	1000	–	–	?	?	•	–
110-49-6	–	ETHYLENE GLYCOL MONOMETHYL ETHER ACETATE	–	–	–	•	–	–	–
107-21-1	–	ETHYLENE GLYCOL, VAPOR	–	–	–	•	?	–	–
75-21-8	–	ETHYLENE OXIDE	10	1000	•	•	•	•	[illegible]
96-45-7	–	ETHYLENE THIOUREA	–	–	–	•	•	?	–
111-54-6	–	ETHYLENEBIS(DITHIOCARBAMIC ACID)	5000	–	–	–	–	•	–

CAS or Other ID. No		CHEMICAL NAME	RQ	TPQ	EHS	OSH	TOXIC	CERCLA	NOTES
107-15-3	–	ETHYLENEDIAMINE	5000	10000	•	•	–	•	–
60-00-4	–	ETHYLENEDIAMINE TETRAACETIC ACID (EDTA)	5000	–	–	–	–	•	–
151-56-4	–	ETHYLENEIMINE	1	500	•	•	?	?	d
151-56-4	–	ETHYLENEIMINE (AZIRIDINE)	–	–	?	?	•	?	–
96-45-7	–	ETHYLENETHIOUREA	10	–	–	?	?	•	–
151-56-4	–	ETHYLENIMINE	1	–	?	?	?	•	–
75-34-3	–	ETHYLIDENE DICHLORIDE	1000	–	–	?	–	•	–
16219-75-3	–	ETHYLIDENENORBORNENE	–	–	–	•	–	–	–
100-74-3	N-	ETHYLMORPHOLINE	–	–	–	•	–	–	–
542-90-5	–	ETHYLTHIOCYANATE	1	10000	•	–	–	–	e
52-85-7	–	FAMPHUR	1000	–	–	•	–	•	–
22224-92-6	–	FENAMIPHOS	1	10/10000	•	•	–	–	e
122-14-5	–	FENITROTHION	1	500	•	–	–	–	e
115-90-2	–	FENSULFOTHION	1	500	•	•	–	–	e,h
55-38-9	–	FENTHION	–	–	–	•	–	–	–
14484-64-1	–	FERBAM	–	–	–	•	–	–	–
1185-57-5	–	FERRIC AMMONIUM CITRATE	1000	–	–	–	–	•	–
2944-67-4	–	FERRIC AMMONIUM OXALATE	1000	–	–	–	–	•	–
55488-87-4	–	FERRIC AMMONIUM OXALATE	1000	–	–	–	–	•	–
7705-08-0	–	FERRIC CHLORIDE	1000	–	–	–	–	•	–
9004-66-4	–	FERRIC DEXTRAN	5000	–	–	•	–	–	–
7783-50-8	–	FERRIC FLUORIDE	100	–	–	–	–	•	–
10421-48-4	–	FERRIC NITRATE	1000	–	–	–	–	•	–
10028-22-5	–	FERRIC SULFATE	1000	–	–	–	–	•	–
10045-89-3	–	FERROUS AMMONIUM SULFATE	1000	–	–	–	–	•	–
7758-94-3	–	FERROUS CHLORIDE	100	–	–	–	–	•	–
7720-78-7	–	FERROUS SULFATE	1000	–	–	–	–	•	–
7782-63-0	–	FERROUS SULFATE	1000	–	–	–	–	•	–
12604-58-9	–	FERROVANADIUM	–	–	–	•	–	–	–
12604-58-9	–	FERROVANADIUM DUST	–	–	–	•	–	–	–
4301-50-2	–	FLUENETIL	1	100/10000	•	–	–	–	e
2164-17-2	–	FLUOMETURON [UREA, N,N-DIMETHYL-N'-[3-(TRIFLUOROMETHYL)PHENYL]-]	–	–	–	–	•	–	–
206-44-0	–	FLUORANTHENE	100	–	–	–	–	•	–
86-73-7	–	FLUORENE	5000	–	–	–	–	•	z
16984-48-8	–	FLUORIDE(S)	–	–	–	•	–	–	–
16984-48-8	–	FLUORIDE, AS DUST	–	–	–	•	–	–	–
7782-41-4	–	FLUORINE	10	500	•	•	–	•	k
640-19-7	–	FLUOROACETAMIDE	100	100/10000	•	–	–	•	j
144-49-0	–	FLUOROACETIC ACID	1	10/10000	•	–	–	–	e
62-74-8	–	FLUOROACETIC ACID, SODIUM SALT	10	–	?	?	–	•	–
359-06-8	–	FLUOROACETYL CHLORIDE	1	10	•	–	–	–	c,e
51-21-8	–	FLUOROURACIL	1	500/10000	•	–	–	–	e
944-22-9	–	FONOFOS	1	500	•	•	–	–	e
50-00-0	–	FORMALDEHYDE	100	500	•	•	•	•	d
50-00-0	–	FORMALDEHYDE (GAS)	–	–	?	•	?	?	–
107-16-4	–	FORMALDEHYDE CYANOHYDRIN	1	1000	•	–	–	–	e,h
50-00-0	–	FORMALDEHYDE, ROSIN CORE SOLDER PYROLYSIS PRODUCTS AS	–	–	?	•	?	?	–
75-12-7	–	FORMAMIDE	–	–	–	•	–	–	–
23422-53-9	–	FORMETANATE HYDROCHLORIDE	1	500/10000	•	–	–	–	e,h
64-18-6	–	FORMIC ACID	5000	–	–	•	–	•	–
2540-82-1	–	FORMOTHION	1	100	•	–	–	–	e
17702-57-7	–	FORMPARANATE	1	100/10000	•	–	–	–	e
3570-75-0	2-(2-	FORMYLHYDRAZINO)-4-(5 NITRO-2-FURYL)THIAZOLE	–	–	–	•	–	–	–
21548-32-3	–	FOSTHIETAN	1	500	•	–	–	–	e
76-13-1	–	FREON 113 [ETHANE, 1,1,2-TRICHLORO-1,2,2-TRIFLUORO-]	–	–	–	•	•	–	–
3878-19-1	–	FUBERIDAZOLE	1	100/10000	•	–	–	–	e
628-86-4	–	FULMINIC ACID, MERCURY(II) SALT	10	–	–	–	–	•	–
110-17-8	–	FUMARIC ACID	5000	–	–	–	–	•	–
110-00-9	–	FURAN	100	500	•	–	–	•	–
109-99-9	–	FURAN, TETRAHYDRO-	1000	–	–	?	–	•	–
98-01-1	2-	FURANCARBOXALDEHYDE	5000	–	–	?	–	•	–
108-31-6	2,5-	FURANDIONE	5000	–	–	?	?	•	–
98-01-1	–	FURFURAL	5000	–	–	•	–	•	–
98-00-0	–	FURFURAL ALCOHOL	–	–	–	•	–	–	–
110-00-9	–	FURFURAN	100	–	?	–	–	•	–
13450-90-3	–	GALLIUM TRICHLORIDE	1	500/10000	•	–	–	–	e
8006-61-9	–	GASOLINE	–	–	–	•	–	–	–

CAS or Other I.D. No.	CHEMICAL NAME		RQ	TPQ	EHS	OSH	TOXIC	CERCLA	NOTES
7782-65-2	–	GERMANIUM TETRAHYDRIDE	–	–	–	•	–	–	–
14808-60-7	–	GLASS, FIBROUS DUST	–	–	–	•	–	–	–
18883-66-4	D-	GLUCOSE, 2-DEOXY-2-[[(METHYLNITROSOAMINO) CARBONYL]AMINO]-	1	–	–	?	–	•	–
111-30-8	–	GLUTARALDEHYDE	–	–	–	•	–	–	–
56-81-5	–	GLYCERIN MIST	–	–	–	•	–	–	–
556-52-5	–	GLYCIDOL	–	–	–	•	–	–	–
765-34-4	–	GLYCIDYLALDEHYDE	10	–	–	•	–	•	–
	–	GLYCOL ETHERS (SEE REGULATION FOR DEFINITION)	–	–	–	–	•	–	–
–	–	GRAIN DUST (OAT, WHEAT, BARLEY)	–	–	–	•	–	–	–
7782-42-5	–	GRAPHITE (NATURAL)	–	–	–	•	–	–	–
7782-42-5	–	GRAPHITE (SYNTHETIC)	–	–	–	•	–	–	–
70-25-7	–	GUANIDINE, N-NITROSO-N-METHYL-N'-NITRO-	10	–	–	?	–	•	–
86-50-0	–	GUTHION	1	–	?	?	–	•	–
10101-41-4	–	GYPSUM	–	–	–	•	–	–	–
16568-02-8	–	GYROMITRIN	–	–	–	•	–	–	–
7440-58-6	–	HAFNIUM	–	–	–	•	–	–	–
–	–	HALOETHERS	–	–	–	–	–	•	–
–	–	HALOMETHANES	–	–	–	–	–	•	–
151-67-7	–	HALOTHANE	–	–	–	•	–	–	–
7440-59-7	–	HELIUM	–	–	–	•	–	–	–
1317-60-8	–	HEMATITE UNDERGROUND MINING	–	–	–	•	–	–	–
1317-60-8	–	HEMATITE UNDERGROUND MINING, WITH EXPOSURE TO RADON	–	–	–	•	–	–	–
76-44-8	–	HEPTACHLOR	1	–	–	•	?	•	–
–	–	HEPTACHLOR AND METABOLITES	–	–	–	–	–	•	–
1024-57-3	–	HEPTACHLOR EPOXIDE	1	–	–	–	–	•	–
76-44-8	–	HEPTACHLOR (1,4,5,6,7,8,8-HEPTACHLORO-3A,4,7,7A-TETRAHYDRO-4,7-METHANO	1	–	–	•	•	•	–
142-82-5	–	HEPTANE (N-HEPTANE)	–	–	–	•	–	–	–
87-68-3	–	HEXACHLORO-1,3-BUTADIENE	–	–	–	?	•	?	–
118-74-1	–	HEXACHLOROBENZENE	10	–	–	•	•	•	–
87-68-3	–	HEXACHLOROBUTADIENE	1	–	–	•	?	•	–
608-73-1	–	HEXACHLOROCYCLOHEXANE (ALL ISOMERS)	–	–	–	?	–	•	–
58-89-9	–	HEXACHLOROCYCLOHEXANE (GAMMA ISOMER)	1	–	?	?	?	•	–
77-47-4	–	HEXACHLOROCYCLOPENTADIENE	10	100	•	•	•	•	d,h
67-72-1	–	HEXACHLOROETHANE	100	–	–	•	•	•	–
465-73-6	–	HEXACHLOROHEXAHYDRO-ENDO,ENDO-DIMETHANONAPHTHALENE	1	–	?	–	–	•	–
1335-87-1	–	HEXACHLORONAPHTHALENE	–	–	–	•	•	–	–
[illegible]-4	–	HEXACHLOROPHENE	100	–	–	–	–	•	–
[illegible]-71-7	–	HEXACHLOROPROPENE	1000	–	–	–	–	•	–
757-58-4	–	HEXAETHYL TETRAPHOSPHATE	100	–	–	–	–	•	–
684-16-2	–	HEXAFLUORACETONE	–	–	–	•	–	–	–
822-06-0	–	HEXAMETHYLENEDIAMINE DIISOCYANATE	–	–	–	•	–	–	–
4835-11-4	–	HEXAMETHYLENEDIAMINE, N,N'-DIBUTYL-	1	500	•	–	–	–	•
680-31-9	–	HEXAMETHYLPHOSPHORAMIDE	–	–	–	•	•	–	–
–	–	HEXANE (ISOMERS OTHER THAN N-HEXANE)	–	–	–	•	–	–	–
110-54-3	–	HEXANE (N-HEXANE)	–	–	–	•	–	–	–
108-84-9	SEC-	HEXYL ACETATE	–	–	–	•	–	–	–
107-41-5	–	HEXYLENE GLYCOL	–	–	–	•	–	–	–
302-01-2	–	HYDRAZINE	1	1000	•	•	•	•	d
10034-93-2	–	HYDRAZINE SULFATE	–	–	–	?	•	–	–
57-14-7	–	HYDRAZINE, 1,1-DIMETHYL	10	–	?	?	?	•	–
1615-80-1	–	HYDRAZINE, 1,2-DIETHYL	10	–	–	?	–	•	–
540-73-8	–	HYDRAZINE, 1,2-DIMETHYL	1	–	–	?	–	•	–
122-66-7	–	HYDRAZINE, 1,2-DIPHENYL	10	–	–	?	?	•	–
60-34-4	–	HYDRAZINE, METHYL	10	–	?	?	?	•	–
10034-93-2	–	HYDRAZINE, SULFATE (1:1)	–	–	–	•	?	–	–

CAS or Other I.D. No.	CHEMICAL NAME	RQ	TPQ	EHS	OSH	TOXIC	CERCLA	NOTES
79-19-6	HYDRAZINECARBOTHIOAMIDE	100	–	?	–	–	•	–
7647-01-0	HYDROCHLORIC ACID	5000	–	?	?	•	•	–
74-90-8	HYDROCYANIC ACID	10	100	•	?	?	•	–
7664-39-3	HYDROFLUORIC ACID	100	–	?	?	?	•	–
1333-74-0	HYDROGEN	–	–	–	•	–	–	–
10035-10-6	HYDROGEN BROMIDE	–	–	–	•	–	–	–
7647-01-0	HYDROGEN CHLORIDE	5000	500	•	•	?	?	a,m
74-90-8	HYDROGEN CYANIDE	10	–	?	•	•	•	–
7664-39-3	HYDROGEN FLUORIDE	100	100	•	•	•	•	–
7722-84-1	HYDROGEN PEROXIDE	1	1000	•	•	–	–	a,l
7803-51-2	HYDROGEN PHOSPHIDE	100	–	?	?	–	•	–
7783-07-5	HYDROGEN SELENIDE	1	10	•	•	–	–	•
7783-06-4	HYDROGEN SULFIDE	100	500	•	?	–	•	l
7783-06-4	HYDROGEN SULFIDE/H2S/	–	–	?	•	–	?	–
80-15-9	HYDROPEROXIDE, 1-METHYL-1-PHENYLETHYL-	10	–	–	–	?	•	–
123-31-9	HYDROQUINONE	1	500/10000	•	•	•	–	l
7783-06-4	HYDROSULFURIC ACID	100	–	?	?	–	•	–
75-60-5	HYDROXYDIMETHYLARSINE OXIDE	1	–	–	–	–	•	–
999-61-1	HYDROXYPROPYL ACRYLATE	–	–	–	•	–	–	–
96-45-7	IMIDAZOLIDINETHIONE	10	–	–	?	?	•	–
95-13-6	INDENE	–	–	–	•	–	–	–
193-39-5	INDENO(1,2,3-CD)PYRENE	100	–	–	•	–	•	–
7440-74-6	INDIUM AND COMPOUNDS	–	–	–	•	–	–	–
–	INDUSTRIES - BOOT AND SHOE MANUFACTURE & REPAIR (CERTAIN OCCUPATIONS)	–	–	–	•	–	–	–
–	INDUSTRIES - FURNITURE MANUFACTURE	–	–	–	•	–	–	–
–	INDUSTRIES - RUBBER (CERTAIN OCCUPATIONS)	–	–	–	•	–	–	–
[illegible]-56-2	IODINE	–	–	–	•	–	–	–
[illegible]-47-8	IODOFORM	–	–	–	•	–	–	–
[illegible]04-66-4	IRON DEXTRAN	5000	–	–	•	–	–	–
1309-37-1	IRON OXIDE FUME (FE2O3)	–	–	–	•	–	–	–
–	IRON SALTS, SOLUBLE	–	–	–	•	–	–	–
13463-40-6	IRON, PENTACARBONYL-	1	100	•	•	–	–	•
123-92-2	ISOAMYL ACETATE	–	–	–	•	–	?	–
123-51-3	ISOAMYL ALCOHOL	–	–	–	•	–	–	–
297-78-9	ISOBENZAN	1	100/10000	•	–	–	–	•
632-79-1	ISOBENZOFURANDIONE, 4,5,6,7-TETRABROMO-	–	–	–	•	–	–	–
110-19-0	ISOBUTYL ACETATE	–	–	–	•	–	?	–
78-83-1	ISOBUTYL ALCOHOL	5000	–	–	•	–	•	–
78-84-2	ISOBUTYRALDEHYDE	–	–	–	–	•	–	–
78-82-0	ISOBUTYRONITRILE	1	1000	•	–	–	–	a,b
102-36-3	ISOCYANIC ACID, 3,4-DICHLOROPHENYL ESTER	1	500/10000	•	–	–	–	•
[illegible]	ISOCYANIC ACID, METHYL ESTER	1	–	?	?	?	•	–
[illegible]	ISODRIN	1	100/10000	•	–	–	•	–
55-91-4	ISOFLUORPHATE	100	100	•	–	–	?	c
26952-21-6	ISOOCTYL ALCOHOL	–	–	–	•	–	–	–
78-59-1	ISOPHORONE	5000	–	–	•	–	•	–
4098-71-9	ISOPHORONE DIISOCYANATE	1	100	•	•	–	–	b,m
78-79-5	ISOPRENE	100	–	–	–	–	•	r
42504-46-1	ISOPROPANOLAMINE DODECYLBENZENESULFONATE	1000	–	–	–	–	•	–
109-59-1	ISOPROPOXYETHANOL	–	–	–	•	–	–	–
108-21-4	ISOPROPYL ACETATE	–	–	–	•	–	–	–
67-63-0	ISOPROPYL ALCOHOL	–	–	–	•	?	–	–
67-63-0	ISOPROPYL ALCOHOL MANUFACTURE (STRONG ACID PROCESS)	–	–	–	•	?	–	–
67-63-0	ISOPROPYL ALCOHOL MANUFACTURE (STRONG ACID PROCESS) (SEE REGULATION)	–	–	–	•	•	–	–
108-23-6	ISOPROPYL CHLOROFORMATE	1	1000	•	–	–	–	•
108-20-3	ISOPROPYL ETHER	–	–	–	•	–	–	–

© Thomson Publishing Group, Inc. 1990

CAS or Other I.D. No.	CHEMICAL NAME		RQ	TPQ	EHS	OSH	TOXIC	CERCLA	NOTES
4016-14-2	–	ISOPROPYL GLYCIDYL ETHER (IGE)	–	–	–	•	–	–	–
75-31-0	–	ISOPROPYLAMINE	–	–	–	•	–	–	–
768-52-5	N-	ISOPROPYLANILINE	–	–	–	•	–	–	–
80-05-7	4,4-	ISOPROPYLIDENEDIPHENOL	–	–	–	–	•	–	–
119-38-0	–	ISOPROPYLMETHYLPYRAZOLYL DIMETHYLCARBAMATE	1	500	•	–	–	–	•
120-58-1	–	ISOSAFROLE	100	–	–	•	•	•	–
2763-96-4	3(2H)-	ISOXAZOLONE, 5-(AMINOMETHYL)-	1000	–	?	–	–	•	–
1332-58-7	–	KAOLIN	–	–	–	•	–	–	–
143-50-0	–	KEPONE	1	–	–	•	–	•	–
463-51-4	–	KETENE	–	–	–	•	–	–	–
78-97-7	–	LACTONITRILE	1	1000	•	–	–	–	•
303-34-4	–	LASIOCARPINE	10	–	–	•	–	•	–
7439-92-1	–	LEAD	1	–	–	•	•	•	–
301-04-2	–	LEAD ACETATE	5000	–	–	•	–	•	–
7645-25-2	–	LEAD ARSENATE	1	–	–	–	–	•	–
7784-40-9	–	LEAD ARSENATE	1	–	–	–	–	•	–
10102-48-4	–	LEAD ARSENATE	1	–	–	?	–	•	–
10102-48-4	–	LEAD ARSENATE AS PB3(ASO4)2	–	–	–	•	–	?	–
1335-32-6	–	LEAD, BIS(ACETATO-O)TETRAHYDROXYTRI-	100	–	–	?	–	•	•
7758-95-4	–	LEAD CHLORIDE	100	–	–	–	–	•	–
7758-97-6	–	LEAD CHROMATE	–	–	–	•	–	–	–
18454-12-1	–	LEAD CHROMATE (VI) OXIDE	–	–	–	•	–	–	–
–		LEAD COMPOUNDS (SEE REGULATION FOR DEFINITION)	–	–	–	–	•	•	–
13814-96-5	–	LEAD FLUOBORATE	100	–	–	–	–	•	–
7783-46-2	–	LEAD FLUORIDE	100	–	–	–	–	•	–
10101-63-0	–	LEAD IODIDE	100	–	–	–	–	•	–
10099-74-8	–	LEAD NITRATE	100	–	–	–	–	•	–
7446-27-7	–	LEAD PHOSPHATE	1	–	–	•	–	•	–
1072-35-1	–	LEAD STEARATE	5000	–	–	–	–	•	–
7428-48-0	–	LEAD STEARATE	5000	–	–	–	–	•	–
52652-59-2	–	LEAD STEARATE	5000	–	–	–	–	•	–
56189-09-4	–	LEAD STEARATE	5000	–	–	–	–	•	–
1335-32-6	–	LEAD SUBACETATE	100	–	–	•	–	•	–
7446-14-2	–	LEAD SULFATE	100	–	–	–	–	•	–
15739-80-7	–	LEAD SULFATE	100	–	–	–	–	•	–
1314-87-0	–	LEAD SULFIDE	5000	–	–	–	–	•	–
592-87-0	–	LEAD THIOCYANATE	100	–	–	–	–	•	–
7439-92-1	–	LEAD, INORGANIC COMPOUNDS	–	–	–	•	?	?	–
7439-92-1	–	LEAD, INORGANIC, FUME AND DUST	–	–	–	•	?	?	–
7439-92-1	–	LEAD, ORGANIC SOAPS	–	–	–	•	?	?	–
21609-90-5	–	LEPTOPHOS	1	500/10000	•	–	–	–	•
541-25-3	–	LEWISITE	1	10	•	–	–	–	ceh
1317-65-3	–	LIMESTONE	–	–	–	•	–	–	–
58-89-9	–	LINDANE	1	1000/10000	•	•	?	•	d
58-89-9	GAMMA-	LINDANE	–	–	?	•	?	?	–
319-84-6	ALPHA-	LINDANE	–	–	–	•	–	?	–
319-85-7	BETA-	LINDANE	–	–	–	•	–	?	–
608-73-1	–	LINDANE - MIXED ISOMERS	–	–	–	•	–	?	–
58-89-9	–	LINDANE AND OTHER HEXACHLOROCYCLOHEXANE ISOMERS	–	–	?	•	?	?	–
58-89-9	–	LINDANE (CYCLOHEXANE,1,2,3,4,5,6-HEXACHLORO-,(1.ALPHA.,2.ALPHA.,3.BETA	1	1000/10000	•	•	•	•	d
68476-86-7	–	LIQUEFIED PETROLEUM GAS (L.P.G.)	–	–	–	•	–	–	–
14307-35-8	–	LITHIUM CHROMATE	10	–	–	–	–	•	–
7580-67-8	–	LITHIUM HYDRIDE	1	100	•	•	–	–	bs
632-99-5	–	MAGENTA, MANUFACTURE OF	–	–	–	•	–	–	–
546-93-0	–	MAGNESITE	–	–	–	•	–	–	–
1309-48-4	–	MAGNESIUM OXIDE FUME	–	–	–	•	–	–	–
121-75-5	–	MALATHION	100	–	–	•	–	•	–
110-16-7	–	MALEIC ACID	5000	–	–	–	–	•	–
108-31-6	–	MALEIC ANHYDRIDE	5000	–	–	•	•	•	–
123-33-1	–	MALEIC HYDRAZIDE	5000	–	–	–	–	•	–
109-77-3	–	MALONONITRILE	1000	500/10000	•	–	–	•	–
12427-38-2	–	MANEB (CARBAMODITHIOIC ACID, 1,2-ETHANEDIYLBIS-, MANGANESE COMPLEX)	–	–	–	–	•	–	–
7439-96-5	–	MANGANESE	–	–	–	•	•	–	–

CAS or Other I.D. No.	CHEMICAL NAME		RQ	TPQ	EHS	OSH	TOXIC	CERCLA	NOTES
–	–	MANGANESE COMPOUNDS (SEE REGULATION FOR DEFINITION)	–	–	–	–	•	–	–
12079-65-1	–	MANGANESE CYCLOPENTADIENYL TRICARBONYL	–	–	–	•	–	–	–
7439-96-5	–	MANGANESE DUST AND COMPOUNDS	–	–	–	•	?	–	–
7439-96-5	–	MANGANESE FUME	–	–	–	•	?	–	–
1317-35-7	–	MANGANESE TETROXIDE	–	–	–	•	–	–	–
12108-13-3	–	MANGANESE, TRICARBONYL METHYLCYCLOPENTADIENYL	1	100	•	?	–	–	a,b
1317-65-3	–	MARBLE/CALCIUM CARBONATE	–	–	–	•	–	–	–
51-75-2	–	MECHLORETHAMINE	1	10	•	?	?	–	c,e
148-82-3	–	MELPHALAN	1	–	–	•	–	•	–
950-10-7	–	MEPHOSFOLAN	1	500	•	–	–	–	c
2032-65-7	–	MERCAPTODIMETHUR	10	–	?	–	–	•	–
1600-27-7	–	MERCURIC ACETATE	1	500/10000	•	–	–	–	•
7487-94-7	–	MERCURIC CHLORIDE	1	500/10000	•	–	–	–	•
592-04-1	–	MERCURIC CYANIDE	1	–	–	–	–	•	–
10045-94-0	–	MERCURIC NITRATE	10	–	–	–	–	•	–
21908-53-2	–	MERCURIC OXIDE	1	500/10000	•	–	–	–	•
7783-35-9	–	MERCURIC SULFATE	10	–	–	–	–	•	–
592-85-8	–	MERCURIC THIOCYANATE	10	–	–	–	–	•	–
7782-86-7	–	MERCUROUS NITRATE	10	–	–	–	–	•	–
10415-75-5	–	MERCUROUS NITRATE	10	–	–	–	–	•	–
[illegible]39-97-6	–	MERCURY	1	–	–	•	•	•	–
–	–	MERCURY COMPOUNDS (SEE REGULATION FOR DEFINITION)	–	–	–	–	•	•	–
628-86-4	–	MERCURY FULMINATE	10	–	–	–	–	•	–
62-38-4	–	MERCURY, (ACETATO-O)PHENYL-	100	–	?	–	–	•	–
7439-97-6	–	MERCURY, ALKYL COMPOUNDS	–	–	–	•	?	?	–
7439-97-6	–	MERCURY, ALL FORMS EXCEPT ALKYL VAPOR	–	–	–	•	?	?	–
[illegible]-97-6	–	MERCURY, ARYL AND INORGANIC COMPOUNDS	–	–	–	•	?	?	–
[illegible]-76-0	–	MERPHALAN	–	–	–	•	–	–	–
141-79-7	–	MESITYL OXIDE	–	–	–	•	–	–	–
72-33-3	–	MESTRANOL	–	–	–	•	–	–	–
10476-95-6	–	METHACROLEIN DIACETATE	1	1000	•	–	–	–	•
79-41-4	–	METHACRYLIC ACID	–	–	–	•	–	–	–
760-93-0	–	METHACRYLIC ANHYDRIDE	1	500	•	–	–	–	•
126-98-7	–	METHACRYLONITRILE	1000	500	•	?	–	•	b
920-46-7	–	METHACRYLOYL CHLORIDE	1	100	•	–	–	–	•
30674-80-7	–	METHACRYLOYLOXYETHYL ISOCYANATE	1	100	•	–	–	–	a,b
10265-92-6	–	METHAMIDOPHOS	1	100/10000	•	–	–	–	•
124-40-3	–	METHANAMINE, N-METHYL-	1000	–	–	?	–	•	–
62-75-9	–	METHANAMINE, N-METHYL-N-NITROSO	10	–	?	?	?	•	–
74-82-8	–	METHANE	–	–	–	•	–	–	–
74-83-9	–	METHANE, BROMO-	1000	–	?	?	?	•	–
74-87-3	–	METHANE, CHLORO-	100	–	–	?	?	•	–
107-30-2	–	METHANE, CHLOROMETHOXY-	10	–	?	?	?	•	–
74-95-3	–	METHANE, DIBROMO-	1000	–	–	–	?	•	–
75-09-2	–	METHANE, DICHLORO-	1000	–	–	?	?	•	–
75-71-8	–	METHANE, DICHLORODIFLUORO-	5000	–	–	?	–	•	–
74-88-4	–	METHANE, IODO-	100	–	–	?	?	•	–
624-83-9	–	METHANE, ISOCYANATO-	1	–	?	?	?	•	–
542-88-1	–	METHANE, OXYBIS(CHLORO-	10	–	?	?	?	•	–
56-23-5	–	METHANE, TETRACHLORO-	10	–	–	?	?	•	–
509-14-8	–	METHANE, TETRANITRO-	10	–	?	?	–	•	–
75-25-2	–	METHANE, TRIBROMO-	100	–	–	?	?	•	–
67-66-3	–	METHANE, TRICHLORO-	10	–	?	?	?	•	–
75-69-4	–	METHANE, TRICHLOROFLUORO-	5000	–	–	?	–	•	–
594-42-3	–	METHANESULFENYL CHLORIDE, TRICHLORO-	100	–	?	?	–	•	–
62-50-0	–	METHANESULFONIC ACID, ETHYL ESTER	1	–	–	?	–	•	–
558-25-8	–	METHANESULFONYL FLUORIDE	1	1000	•	–	–	–	•
74-93-1	–	METHANETHIOL	100	–	?	?	–	•	–
76-44-8	4,7-	METHANO-1H-INDENE,1,4,5,6,7,8,8-HEPTACHLORO-3A,4,7,7A-TETRAHYDRO-	1	–	–	?	?	•	–
64-18-6	–	METHANOIC ACID	5000	–	–	?	–	•	–
[illegible]-74-9	4,7-	METHANOINDAN, 1,2,4,5,6,7,8,8-OCTACHLORO-3A,4,7,7A-TETRAHYDRO-	1	–	?	?	?	•	–

© Thompson Publishing Group, Inc. 1990

CAS or Other I.D. No.	CHEMICAL NAME		RQ	TPQ	EHS	OSH	TOXIC	CERCLA	NOTES
67-56-1	-	METHANOL	5000	-	-	?	•	•	-
91-80-5	-	METHAPYRILENE	5000	-	-	-	-	•	-
143-50-0	1,3,4-	METHENO-2H-CYCLOBUTA(CD)PENALEN-2-ONE-1,1A,3,3A,4,5,5A,5B,6-DECACHLOROOCTAHYDRO-	1	-	-	?	-	•	-
950-37-8	-	METHIDATHION	1	500/10000	•	-	-	-	e
2032-65-7	-	METHIOCARB	10	500/10000	•	-	-	?	-
16752-77-5	-	METHOMYL	100	500/10000	•	•	-	•	h
298-81-7	-	METHOXSALEN WITH ULTRAVIOLET A THERAPY (PUVA)	-	-	-	•	-	-	-
72-43-5	-	METHOXYCHLOR	1	-	-	•	?	•	-
72-43-5	-	METHOXYCHLOR (BENZENE, 1,1'-(2,2,2-TRICHLOROETHYLIDENE)BIS [4-METHOXY-	1	-	-	•	•	•	-
109-86-4	2-	METHOXYETHANOL	-	-	-	•	•	-	-
110-49-6	2-	METHOXYETHYL ACETATE	-	-	-	•	-	-	-
151-38-2	-	METHOXYETHYLMERCURIC ACETATE	1	500/10000	•	-	-	-	e
150-76-5	4-	METHOXYPHENOL	-	-	-	•	-	-	-
298-81-7	8-	METHOXYPSORALEN	-	-	-	•	-	-	-
-	-	METHRONIDAZOLE	-	-	-	•	-	-	-
80-63-7	-	METHYL 2-CHLOROACRYLATE	1	500	•	-	-	-	e
137-05-3	-	METHYL 2-CYANOACRYLATE	-	-	-	•	-	-	-
79-20-9	-	METHYL ACETATE	-	-	-	•	-	-	-
74-99-7	-	METHYL ACETYLENE	-	-	-	•	-	-	-
-	-	METHYL ACETYLENE-PROPADIENE MIXTURE (MAPP)	-	-	-	•	-	-	-
96-33-3	-	METHYL ACRYLATE	-	-	-	•	•	-	-
67-56-1	-	METHYL ALCOHOL	5000	-	-	•	?	•	-
100-61-8	N-	METHYL ANILINE (MONOMETHYL ANILINE)	-	-	-	•	-	-	-
74-83-9	-	METHYL BROMIDE	1000	1000	•	•	?	•	l
109-84-4	-	METHYL CELLOSOLVE	-	-	-	•	-	-	-
110-49-6	-	METHYL CELLOSOLVE ACETATE	-	-	-	•	-	-	-
74-87-3	-	METHYL CHLORIDE	100	-	-	•	?	•	-
79-22-1	-	METHYL CHLOROCARBONATE	1000	-	?	-	-	•	-
71-55-6	-	METHYL CHLOROFORM	1000	-	-	•	?	•	-
79-22-1	-	METHYL CHLOROFORMATE	1000	500	•	-	-	?	d,h
107-30-2	-	METHYL CHLOROMETHYL ETHER	-	-	?	•	?	?	-
8022-00-2	-	METHYL DEMETON	-	-	-	•	-	-	-
78-93-3	-	METHYL ETHYL KETONE	5000	-	-	•	•	•	-
1338-23-4	-	METHYL ETHYL KETONE PEROXIDE	10	-	-	•	-	•	-
107-31-3	-	METHYL FORMATE	-	-	-	•	-	-	-
60-34-4	-	METHYL HYDRAZINE	10	500	•	•	•	•	-
74-88-4	-	METHYL IODIDE	100	-	-	•	•	•	-
110-12-3	-	METHYL ISOAMYL KETONE	-	-	-	•	-	-	-
108-11-2	-	METHYL ISOBUTYL CARBINOL	-	-	-	•	-	-	-
108-10-1	-	METHYL ISOBUTYL KETONE	5000	-	-	•	•	•	-
[illegible]	-	METHYL ISOCYANATE	1	500	•	•	•	•	f
[illegible]-50-4	-	METHYL ISOPROPYL KETONE	-	-	-	•	-	-	-
556-61-6	-	METHYL ISOTHIOCYANATE	1	500	•	-	-	-	b,e
74-93-1	-	METHYL MERCAPTAN	100	500	•	•	-	?	-
80-62-6	-	METHYL METHACRYLATE	1000	-	-	•	•	•	-
66-27-3	-	METHYL METHANESULFONATE	-	-	-	•	-	-	-
110-43-0	-	METHYL N-AMYL KETONE	-	-	-	•	-	-	-
591-78-6	-	METHYL N-BUTYL KETONE	-	-	-	•	-	-	-
298-00-0	-	METHYL PARATHION	100	-	?	•	-	•	-
3735-23-7	-	METHYL PHENKAPTON	1	500	•	-	-	-	e
676-97-1	-	METHYL PHOSPHONIC DICHLORIDE	1	100	•	-	-	-	b,e
107-87-9	-	METHYL PROPYL KETONE	-	-	-	•	-	-	-
681-84-5	-	METHYL SILICATE	-	-	-	•	-	-	-
98-83-9	ALPHA-	METHYL STYRENE	-	-	-	•	-	-	-
1634-04-4	-	METHYL TERT-BUTYL ETHER	-	-	-	-	•	-	-
556-64-9	-	METHYL THIOCYANATE	1	10000	•	-	-	-	e
78-94-4	-	METHYL VINYL KETONE	1	10	•	-	-	-	e
129-15-7	2-	METHYL-1-NITROANTHRAQUINONE	-	-	-	•	-	-	-
108-10-1	4-	METHYL-2-PENTANONE	5000	-	-	?	?	•	-
70-25-7	N-	METHYL-N'-NITRO-N-NITROSOGUANIDINE	10	-	-	•	-	•	-
126-98-7	-	METHYLACRYLONITRILE	-	-	?	•	-	?	-

CAS or Other I.D. No.	CHEMICAL NAME		RQ	TPQ	EHS	OSH	TOXIC	CERCLA	NOTES
109-87-5	–	METHYLAL	–	–	–	•	–	–	–
74-89-5	–	METHYLAMINE	–	–	–	•	–	?	–
75-55-8	2-	METHYLAZIRIDINE	1	–	?	•	?	•	–
592-62-1	–	METHYLAZOXYMETHANOL ACETATE	–	–	–	•	–	–	–
504-60-9	1-	METHYLBUTADIENE	100	–	–	–	–	•	–
56-49-5	3-	METHYLCHOLANTHRENE	10	–	–	–	–	•	–
3697-24-3	5-	METHYLCRYSENE	–	–	–	•	–	–	–
108-87-2	–	METHYLCYCLOHEXANE	–	–	–	•	–	–	–
25639-42-3	–	METHYLCYCLOHEXANOL	–	–	–	•	–	–	–
583-60-8	O-	METHYLCYCLOHEXANONE	–	–	–	•	–	–	–
12108-13-3	–	METHYLCYCLOPENTADIENYL MANGANESE TRICARBONYL	–	–	?	•	–	–	•
101-14-4	4,4'-	METHYLENE BIS (2-CHLOROANILINE) (MBOCA)	10	–	–	•	•	•	–
101-14-4	4,4'-	METHYLENE BIS(2-CHLOROANILINE) (MOCA)	10	–	–	•	?	•	–
838-88-0	4,4'-	METHYLENE BIS(2-METHYLANILINE)	–	–	–	•	–	–	–
5124-30-1	–	METHYLENE BIS(4-CYCLOHEXYL ISOCYANATE)	–	–	–	•	–	–	–
101-61-1	4,4'-	METHYLENE BIS(N,N-DIMETHYL)BENZENEAMINE	–	–	–	•	•	–	–
101-68-8	–	METHYLENE BIS(PHENYLISOCYANATEXMBI)	–	–	–	?	•	–	–
101-68-8	–	METHYLENE BISPHENYL ISOCYANATE	–	–	–	•	?	–	–
74-95-3	–	METHYLENE BROMIDE	1000	–	–	–	•	•	–
75-09-2	–	METHYLENE CHLORIDE	1000	–	–	•	?	•	–
101-77-9	4,4-	METHYLENE DIANILINE	–	–	–	?	•	–	–
101-14-4	4,4'-	METHYLENEBIS(2-CHLOROANILINE)	10	–	–	?	?	•	–
70-30-4	2,2'-	METHYLENEBIS(3,4,6-TRICHLOROPHENOL)	100	–	–	–	–	•	–
[illegible]77-9	4,4'-	METHYLENEDIANILINE	–	–	–	•	?	–	–
[illegible]2-44-8	4,4'-	METHYLENEDIANILINE CHLORIDE	–	–	–	•	–	–	–
86-5	2-	METHYLLACTONITRILE	10	–	?	–	–	•	–
93-1	–	METHYLMERCAPTAN	100	–	?	?	–	•	–
502-39-6	–	METHYLMERCURIC DICYANAMIDE	1	500/10000	•	–	–	–	•
56-04-2	–	METHYLTHIOURACIL	10	–	–	•	–	•	–
75-79-6	–	METHYLTRICHLOROSILANE	1	500	•	–	–	–	e,h
1129-41-5	–	METOLCARB	1	100/10000	•	–	–	–	•
–	–	METOXSALEN WITH ULTRAVIOLET A THERAPY (PUVA)	–	–	–	•	–	–	–
21087-64-9	–	METRIBUZIN	–	–	–	•	–	–	–
443-48-1	–	METRONIDAZOLE	–	–	–	•	–	–	–
7786-34-7	–	MEVINPHOS	10	500	•	•	–	•	–
315-18-4	–	MEXACARBATE	1000	500/10000	•	–	–	•	–
12001-26-2	–	MICA	–	–	–	•	–	–	–
90-94-8	–	MICHLER'S KETONE	–	–	–	•	•	–	–
8002-05-9	–	MINERAL OILS (CONTAINING VARIOUS ADDITIVES AND IMPURITIES) USED –	–	–	–	•	–	–	–
8002-05-9	–	MINERAL OILS: ACID-TREATED OILS	–	–	–	•	–	–	–
8002-05-9	–	82	–	–	–	•	–	–	–
8002-05-9	–	MINERAL OILS: MILDLY HYDROTREATED OILS	–	–	–	•	–	–	–
8002-05-9	–	MINERAL OILS: MILDLY SOLVENT-REFINED OILS	–	–	–	•	–	–	–
8002-05-9	–	MINERAL OILS: UNTREATED VACUUM DISTILLATES	–	–	–	•	–	–	–
8002-05-9	–	MINERAL OILS: USED GASOLINE-ENGINE OIL	–	–	–	•	–	–	–
–	–	MINERAL WOOL FIBER	–	–	–	•	–	–	–
2385-85-5	–	MIREX	–	–	–	•	–	–	–
50-07-7	–	MITOMYCIN C	10	500/10000	•	•	–	•	d
70-25-7	–	MNNG	10	–	–	?	–	•	–
7439-98-7	–	MOLYBDENUM-INSOLUBLE COMPOUNDS	–	–	–	•	–	–	–
1313-27-5	–	MOLYBDENUM TRIOXIDE	–	–	–	–	•	–	–
7439-98-7	–	MOLYBDENUM-SOLUBLE COMPOUNDS	–	–	–	•	–	–	–
315-22-0	–	MONOCROTALINE	–	–	–	•	–	–	–
6923-22-4	–	MONOCROTOPHOS	1	10/10000	•	•	–	–	•
75-04-7	–	MONOETHYLAMINE	100	–	–	•	–	•	–
[illegible]96-5	–	MONOMETHYLAMINE	100	–	–	?	–	•	–
[illegible]91-8	–	MORPHOLINE	–	–	–	•	–	–	–

© Thompson Publishing Group, Inc. 1990

CAS or Other I.D. No.	CHEMICAL NAME		RQ	TPQ	EHS	OSH	TOXIC	CERCLA	NOTES
13146-28-6	5-(	MORPHOLINOMETHYL)-3-((5-NITROFURFURYLIDENE)...(D1-FORM HYDROCHLORIDE)	–	–	–	•	–	–	–
3796-88-8	5-(	MORPHOLINOMETHYL)-3-((5-NITROFURFURYLIDENE)AMINO)-2-OXAZO-...(1-FORM)	–	–	–	•	–	–	–
139-91-3	5-(	MORPHOLINOMETHYL)-3-((5-NITROFURFURYLIDENE)AMINO)-2-OXAZO-...(D1-FORM)	–	–	–	•	–	–	–
2763-96-4	–	MUSCIMOL	1000	10000	•	–	–	?	a,b
505-60-2	–	MUSTARD GAS	1	500	•	•	?	–	a,b
505-60-2	–	MUSTARD GAS [ETHANE,1,1'-THIOBIS [2-CHLORO-]	1	500	•	•	•	.	a,b
55-98-1	–	MYLERAN	–	–	–	•	–	–	–
3771-19-5	–	NAFENOPIN	–	–	–	•	–	–	–
300-76-5	–	NALED	10	–	–	•	–	•	–
8030-30-6	–	NAPHTHA (COAL TAR)	–	–	–	•	–	–	–
8030-30-6	–	NAPHTHA, VM & P	–	–	–	•	–	–	–
134-32-7	1-	NAPHTHALENAMINE	100	–	–	•	?	•	–
91-59-8	2-	NAPHTHALENAMINE	10	–	–	?	?	•	–
91-20-3	–	NAPHTHALENE	100	–	–	•	•	•	–
91-58-7	–	NAPHTHALENE, 2-CHLORO-	5000	–	–	–	–	•	–
130-15-4	1,4-	NAPHTHALENEDIONE	5000	–	–	–	–	•	–
72-57-1	2,7-	NAPHTHALENEDISULFONIC ACID, 3,3'- ... (SEE TRYPAN BLUE)	10	–	–	?	–	•	–
1338-24-5	–	NAPHTHENIC ACID	100	–	–	–	–	•	–
130-15-4	1,4-	NAPHTHOQUINONE	5000	–	–	–	–	•	–
91-59-8	2-	NAPHTHYLAMINE	–	–	–	•	?	?	–
91-59-8	BETA-	NAPHTHYLAMINE	1	–	–	•	•	•	–
134-32-7	ALPHA-	NAPHTHYLAMINE	100	–	–	•	•	•	–
494-03-1	2-	NAPHTHYLAMINE, N,N-BIS(2-CHLOROETHYL)-	100	–	–	•	–	•	–
86-88-4	ALPHA-	NAPHTHYLTHIOUREA	100	–	?	?	–	•	–
20830-81-3	5,12-	NAPTHACENEDIONE, ... (SEE DAUNOMYCIN)	10	–	–	?	–	•	–
7440-01-9	–	NEON	–	–	–	•	–	–	–
7440-02-0	–	NICKEL	100	–	–	•	•	•	ff
15699-18-0	–	NICKEL AMMONIUM SULFATE	100	–	–	–	–	•	–
–	–	NICKEL AND COMPOUNDS	–	–	–	–	?	•	–
13463-39-3	–	NICKEL CARBONYL	10	1	•	•	–	•	d
13463-39-3	–	NICKEL CARBONYL NI(CO)4,(T-4)-	10	–	?	?	–	•	–
7718-54-9	–	NICKEL CHLORIDE	100	–	–	–	–	•	–
37211-05-5	–	NICKEL CHLORIDE	100	–	–	–	–	•	–
7440-02-0	–	NICKEL COMPOUNDS	–	–	–	•	?	?	–
–	–	NICKEL COMPOUNDS (SEE REGULATION FOR DEFINITION)	–	–	–	–	•	•	–
557-19-7	–	NICKEL CYANIDE	10	–	–	–	–	•	–
557-19-7	–	NICKEL CYANIDE NI(CN)2	10	–	–	–	–	•	–
12054-48-7	–	NICKEL HYDROXIDE	10	–	–	–	–	•	–
14216-75-2	–	NICKEL NITRATE	100	–	–	–	–	•	–
1313-99-1	–	NICKEL OXIDE	–	–	–	•	–	–	–
7440-02-0	–	NICKEL REFINING	–	–	–	•	?	?	–
7440-02-0	–	NICKEL SOLUBLE COMPOUNDS	–	–	–	•	?	?	–
12035-72-2	–	NICKEL SUBSULFIDE	–	–	–	•	–	–	–
7786-81-4	–	NICKEL SULFATE	100	–	–	–	–	•	–
16812-54-7	–	NICKEL SULFIDE ROASTING, FUME AND DUST, AS NI	–	–	–	•	–	–	–
7440-02-0	–	NICKEL, METAL	–	–	–	•	?	?	–
1271-28-9	–	NICKELOCENE	–	–	–	•	–	–	–
54-11-5	–	NICOTINE	100	100	•	•	–	?	c
54-11-5	–	NICOTINE AND SALTS	100	–	?	?	–	•	–
65-30-5	–	NICOTINE SULFATE	1	100/10000	•	–	–	–	e
61-57-4	–	NIRIDAZOLE	–	–	–	•	–	–	–
1929-82-4	–	NITRAPYRIN	–	–	–	•	–	–	–
7697-37-2	–	NITRIC ACID	1000	1000	•	•	•	•	–
10102-43-9	–	NITRIC OXIDE	10	100	•	•	–	•	c
139-13-9	–	NITRILOTRIACETIC ACID	–	–	–	•	•	–	–
531-82-8	N-(4-(5-	NITRO-2 FURYL)-2-THIAZOLYL)ACETAMIDE	–	–	–	•	–	–	–
99-59-2	5-	NITRO-O-ANISIDINE	–	–	–	•	•	–	–

CAS or Other I.D. No.	CHEMICAL NAME		RQ	TPQ	EHS	OSH	TOXIC	CERCLA	NOTES
99-55-8	5-	NITRO-O-TOLUIDINE	100	–	–	–	–	•	–
602-87-9	5-	NITROACENAPHTHENE	–	–	–	•	–	–	–
100-01-6	P-	NITROANILINE	5000	–	–	•	–	•	–
98-95-3	–	NITROBENZENE	1000	10000	•	•	•	•	1
92-93-3	4-	NITROBIPHENYL	–	–	–	•	•	–	–
100-00-5	P-	NITROCHLOROBENZENE	–	–	–	•	–	–	–
1122-60-7	–	NITROCYCLOHEXANE	1	500	•	–	–	–	•
92-93-3	4-	NITRODIPHENOL	–	–	–	•	?	–	–
79-24-3	–	NITROETHANE	–	–	–	•	–	–	–
1836-75-5	–	NITROFEN	–	–	–	•	?	–	–
1836-75-5	–	NITROFEN (TECHNICAL GRADE)	–	–	–	•	?	–	–
1836-75-5	–	NITROFEN [BENZENE, 2,4-DICHLORO-1-(4-NITROPHENOXY)-]	–	–	–	•	•	–	–
555-84-0	1-((5-	NITROFURFURYLIDENE)AMINO)-2-IMIDAZOLIDINONE	–	–	–	•	–	–	–
10102-44-0	–	NITROGEN DIOXIDE	10	100	•	•	–	•	–
10544-72-6	–	NITROGEN DIOXIDE	10	–	–	–	–	•	–
51-75-2	–	NITROGEN MUSTARD	–	–	?	•	?	–	–
126-85-2	–	NITROGEN MUSTARD N-OXIDE	–	–	–	•	–	–	–
51-75-2	–	NITROGEN MUSTARD [2-CHLORO-N-(2-CHLOROETHYL)-N-METHYLETHANAMINE]	–	–	?	•	•	–	–
7783-54-2	–	NITROGEN TRIFLUORIDE	–	–	–	•	–	–	–
10102-43-9	–	NITROGEN(II) OXIDE	10	–	?	?	–	•	–
10102-44-0	–	NITROGEN(IV) OXIDE	10	–	?	?	–	•	–
10544-72-6	–	NITROGEN(IV) OXIDE	10	–	–	–	–	•	–
55-63-0	–	NITROGLYCERINE	10	–	–	•	•	•	–
75-52-5	–	NITROMETHANE	–	–	–	•	–	–	–
[illegible]5-5	2-	NITROPHENOL	100	–	–	–	•	•	–
[illegible]02-7	4-	NITROPHENOL	100	–	–	–	•	•	–
[illegible]5-5	O-	NITROPHENOL (MIXED)	100	–	–	–	?	•	–
[illegible]02-7	P-	NITROPHENOL (MIXED)	100	–	–	–	?	•	–
[illegible]4-64-7	M-	NITROPHENOL (MIXED)	100	–	–	–	–	•	–
25154-55-6	–	NITROPHENOL (MIXED)	100	–	–	–	–	•	–
–	–	NITROPHENOLS	–	–	–	–	?	•	–
79-46-9	2-	NITROPROPANE	10	–	–	•	•	•	–
108-03-2	1-	NITROPROPANE	–	–	–	•	–	–	–
–	–	NITROSAMINES	–	–	–	–	–	•	–
759-73-9	N-	NITROSO-N-ETHYLUREA	1	–	–	•	•	•	–
684-93-5	N-	NITROSO-N-METHYLUREA	1	–	–	•	•	•	–
615-53-2	N-	NITROSO-N-METHYLURETHANE	1	–	–	•	–	•	–
924-16-3	N-	NITROSODI-N-BUTYLAMINE	10	–	–	•	•	•	–
621-64-7	N-	NITROSODI-N-PROPYLAMINE	–	–	–	•	•	?	–
1116-54-7	N-	NITROSODIETHANOLAMINE	1	–	–	•	–	•	–
55-18-5	N-	NITROSODIETHYLAMINE	1	–	–	•	•	•	–
62-75-9	N-	NITROSODIMETHYLAMINE	10	–	?	•	•	•	–
[illegible]	–	NITROSODIMETHYLAMINE	1	1000	•	?	?	?	d,h
[illegible]	N-	NITROSODIPHENYLAMINE	100	–	–	–	•	•	–
[illegible]56-10-6	P-	NITROSODIPHENYLAMINE	–	–	–	•	•	–	–
10595-95-6	N-	NITROSOMETHYLETHYLAMINE	–	–	–	•	–	–	–
4549-40-0	N-	NITROSOMETHYLVINYLAMINE	10	–	–	•	•	•	–
59-89-2	N-	NITROSOMORPHOLINE	–	–	–	•	•	–	–
16543-55-8	N-	NITROSONORNICOTINE	–	–	–	•	•	–	–
52759-22-1	N-	NITROSONORNICOTINE	–	–	–	•	–	–	–
100-75-4	N-	NITROSOPIPERIDINE	10	–	–	•	•	•	–
930-55-2	N-	NITROSOPYRROLIDINE	1	–	–	•	–	•	–
13256-22-9	N-	NITROSOSARCOSINE	–	–	–	•	–	–	–
88-72-2	O-	NITROTOLUENE	1000	–	–	–	–	•	–
99-08-1	M-	NITROTOLUENE	1000	–	–	•	–	•	–
99-99-0	P-	NITROTOLUENE	1000	–	–	–	–	•	–
1321-12-6	–	NITROTOLUENE	1000	–	–	–	–	•	–
111-84-2	–	NONANE	–	–	–	•	–	–	–
991-42-4	–	NORBORMIDE	1	100/10000	•	–	–	–	•
115-29-7	5-	NORBORNENE-2,3-DIMETHANOL, 1,4,5,6,7,7-HEXACHLORO, CYCLIC SULFITE	1	–	?	?	–	•	–
68-22-4	–	NORETHISTERONE	–	–	–	•	–	–	–
	–	NUISANCE PARTICULATES (DUST), RESPIRABLE FRACTION	–	–	–	•	–	–	–
	–	NUISANCE PARTICULATES (DUST), TOTAL DUST	–	–	–	•	–	–	–

CAS or Other I.D. No.	CHEMICAL NAME		RQ	TPQ	EHS	OSH	TOXIC	CERCLA	NOTES
\2234-13-1	–	OCTACHLORONAPTHALENE	–	–	–	•	•	–	–
152-16-9	–	OCTAMETHYLPYROPHOSPHORAMIDE	100	–	?	–	–	•	–
111-65-9	–	OCTANE	–	–	–	•	–	–	–
–	–	OESTRADIOL - 17B	–	–	–	•	–	–	–
–	–	OESTROGENS, CONJUGATED	–	–	–	•	–	–	–
53-16-7	–	OESTRONE	–	–	–	•	–	–	–
8012-95-1	–	OIL MIST--MINERAL	–	–	–	•	–	–	–
–	–	OIL ORANGE SS	–	–	–	•	–	–	–
–	–	OIL SHALE SOOT-EXTRACTS	–	–	–	•	–	–	–
–	–	ORAL CONTRACEPTIVES, COMBINED	–	–	–	•	–	–	–
–	–	ORAL CONTRACEPTIVES, SEQUENTIAL	–	–	–	•	–	–	–
–	–	ORGANO (ALKYL) MERCURY	–	–	–	•	–	–	–
PMN82147	–	ORGANORHODIUM COMPLEX	1	10/10000	•	–	–	•	e
20816-12-0	–	OSMIUM OXIDE	1000	–	–	7	7	•	–
20816-12-0	–	OSMIUM TETROXIDE	1000	–	–	•	•	•	–
630-60-4	–	OUABAIN	1	100/10000	•	–	–	–	ca
145-73-3	7-	OXABICYCLO(2.2.1)HEPTANE-2,3-DICARBOXYLIC ACID	1000	–	–	–	–	•	–
144-62-7	–	OXALIC ACID	–	–	–	•	–	–	–
23135-22-0	–	OXAMYL	1	100/10000	•	–	–	–	e
1120-71-4	1,2-	OXATHIOLANE, 2,2-DIOXIDE	10	–	–	?	?	•	–
50-18-0	2H-1,3,2-	OXAZAPHOSPHORIN,2-AMINE,N,N-BIS(CHLOROETHYL) TETRAHYDRO-2-OXIDE	10	–	–	?	–	•	–
78-71-7	–	OXETANE, 3,3-BIS(CHLOROMETHYL)	1	500	•	–	–	–	e
75-21-8	–	OXIRANE	10	–	?	?	?	•	–
106-89-8	–	OXIRANE, (CHLOROMETHYL)-	100	–	?	?	?	•	–
2497-07-6	–	OXYDISULFOTON	1	500	•	–	–	–	cb
7783-41-7	–	OXYGEN DIFLUORIDE	–	–	–	•	–	–	–
434-07-1	–	OXYMETHOLONE	–	–	–	•	–	–	–
10028-15-6	–	OZONE	1	100	•	•	–	–	e
794-93-4	–	PANFURAN S (DIHYDROXYMETHYLFURATRIZINE)	–	–	–	•	–	–	–
8002-74-2	–	PARAFFIN WAX FUME	–	–	–	•	–	–	–
30525-89-4	–	PARAFORMALDEHYDE	1000	–	–	–	–	•	–
123-63-7	–	PARALDEHYDE	1000	–	–	–	–	•	–
1910-42-5	–	PARAQUAT	1	10/10000	•	•	–	–	e
2074-50-2	–	PARAQUAT METHOSULFATE	1	10/10000	•	–	–	–	e
4685-14-7	–	PARAQUAT, RESPIRABLE SIZES	–	–	–	•	–	–	–
56-38-2	–	PARATHION	10	100	•	•	?	•	cd
56-38-2	–	PARATHION [PHOSPHOROTHIOIC ACID, 0,0-DIETHYL 0-(4-NITROPHENYL) ESTER]	10	100	•	•	•	•	cd
298-00-0	–	PARATHION-METHYL	100	100/10000	•	?	–	?	c
12002-03-8	–	PARIS GREEN	100	500/10000	•	?	–	?	d
19624-22-7	–	PENTABORANE	1	500	•	•	–	–	e
608-93-5	–	PENTACHLOROBENZENE	10	–	–	–	–	•	–
76-01-7	–	PENTACHLOROETHANE	10	–	–	–	–	•	d
1321-64-8	–	PENTACHLORONAPHTHALENE	–	–	–	•	–	–	–
82-68-8	–	PENTACHLORONITROBENZENE	100	–	–	–	?	•	–
87-86-5	–	PENTACHLOROPHENOL	10	–	–	•	?	•	d
87-86-5	–	PENTACHLOROPHENOL (PCP)	–	–	–	?	•	?	–
2570-26-5	–	PENTADECYLAMINE	1	100/10000	•	–	–	–	e
504-60-9	1,3-	PENTADIENE	100	–	–	–	–	•	–
115-77-5	–	PENTAERYTHRITOL	–	–	–	•	–	–	–
109-66-0	–	PENTANE	–	–	–	•	–	–	–
79-21-0	–	PERACETIC ACID	1	500	•	–	•	–	e
127-18-4	–	PERCHLOROETHYLENE	100	–	–	•	?	•	–
594-42-3	–	PERCHLOROMETHYLMERCAPTAN	100	500	•	•	–	?	–
7616-94-6	–	PERCHLORYL FLUORIDE	–	–	–	•	–	–	–
–	–	PERLITE	–	–	–	•	–	–	–
62-44-2	–	PHENACETIN	100	–	–	•	–	•	–
62-44-2	–	PHENACETIN, ANALGESIC MIXTURES CONTAINING	–	–	–	•	–	?	–
85-01-8	–	PHENANTHRENE	5000	–	–	•	–	•	–
94-78-0	–	PHENAZOPYRIDINE	–	–	–	•	–	–	–
136-40-3	–	PHENAZOPYRIDINE HYDROCHLORIDE	–	–	–	•	–	–	–
108-95-2	–	PHENOL	1000	500/10000	•	•	•	•	–
696-28-6	–	PHENOL DICHLOROARSINE	1	–	?	–	–	•	–

CAS or Other ID No.	CHEMICAL NAME		RQ	TPQ	EHS	OSH	TOXIC	CERCLA	NOTES
4418-66-0	–	PHENOL, 2,2'-THIOBIS(4-CHLORO-6-METHYL-	1	100/10000	•	–	–	–	•
58-90-2	–	PHENOL, 2,3,4,6-TETRACHLORO-	10	–	–	–	–	•	–
95-95-4	–	PHENOL, 2,4,5-TRICHLORO-	10	–	–	–	?	•	–
88-06-2	–	PHENOL, 2,4,6-TRICHLORO-	10	–	–	?	?	•	–
131-74-8	–	PHENOL, 2,4,6-TRINITRO-AMMONIUM SALT	10	–	–	–	–	•	–
120-83-2	–	PHENOL, 2,4-DICHLORO-	100	–	–	–	?	•	–
105-67-9	–	PHENOL, 2,4-DIMETHYL-	100	–	–	–	?	•	–
51-28-5	–	PHENOL, 2,4-DINITRO-	10	–	–	–	?	•	–
88-85-7	–	PHENOL, 2,4-DINITRO-6-(1-METHYLPROPYL)	1000	–	?	–	–	•	–
534-52-1	–	PHENOL, 2,4-DINITRO-6-METHYL-AND SALTS	10	–	?	?	?	•	–
87-65-0	–	PHENOL, 2,6-DICHLORO-	100	–	–	–	–	•	–
95-57-8	–	PHENOL, 2-CHLORO-	100	–	–	–	–	•	–
131-89-5	–	PHENOL, 2-CYCLOHEXYL-4,6-DINITRO	100	–	–	–	–	•	–
64-00-6	–	PHENOL, 3-(1-METHYLETHYL)-, METHYLCARBAMATE	1	500/10000	•	–	–	–	•
59-50-7	–	PHENOL, 4-CHLORO-3-METHYL-	5000	–	–	–	–	•	–
100-02-7	–	PHENOL, 4-NITRO	100	–	–	–	?	•	–
56-53-1	–	PHENOL,4,4'-(1,2-DIETHYL-1,2-ETHENED!YL) BIS,-(E)	1	–	–	?	–	•	–
87-86-5	–	PHENOL, PENTACHLORO-	10	–	–	?	?	•	–
92-84-2	–	PHENOTHIAZINE	–	–	–	•	–	–	–
58-36-6	–	PHENOXARSINE, 10, 10'-OXIDI	1	500/10000	•	–	–	–	•
–	–	PHENOXYACETIC ACID HERBICIDES (OCCUPATIONAL EXPOSURE TO)	–	–	–	•	–	–	–
[illegible]96-1	–	PHENOXYBENZAMINE	–	–	–	•	–	–	–
[illegible]2-3	–	PHENOXYBENZAMINE HYDROCHLORIDE	–	–	–	•	–	–	–
[illegible]28-6	–	PHENYL DICHLOROARSINE	1	500	•	–	–	•	d,h
[illegible]1-84-8	–	PHENYL ETHER (VAPOR)	–	–	–	•	–	–	–
–	–	PHENYL ETHER-BIPHENYL MIXTURE (VAPOR)	–	–	–	•	–	–	–
122-60-1	–	PHENYL GLYCIDYL ETHER (PGE)	–	–	–	•	–	–	–
108-98-5	–	PHENYL MERCAPTAN	–	–	?	•	–	?	–
135-88-6	N-	PHENYL-2-NAPHTHYLAMINE	–	–	–	•	–	–	–
148-82-3	–	PHENYLALANINE,4(BIS(2-CHLOROETHYL)AMINOL)	1	–	–	?	–	•	–
193-39-5	1,10-(1,2	PHENYLENE)PYRENE	100	–	–	?	–	•	–
106-50-3	P-	PHENYLENEDIAMINE	–	–	–	•	•	–	–
100-63-0	–	PHENYLHYDRAZINE	–	–	–	•	–	–	–
59-88-1	–	PHENYLHYDRAZINE HYDROCHLORIDE	1	1000/10000	•	–	–	–	•
62-38-4	–	PHENYLMERCURIC ACETATE	100	–	?	–	–	•	–
62-38-4	–	PHENYLMERCURY ACETATE	100	500/10000	•	–	–	?	–
90-43-7	2-	PHENYLPHENOL	–	–	–	–	•	–	–
638-21-1	–	PHENYLPHOSPHINE	–	–	–	•	–	–	–
2097-19-0	–	PHENYLSILATRANE	1	100/10000	•	–	–	–	d,h
103-85-5	–	PHENYLTHIOUREA	100	100/10000	•	–	–	?	–
103-85-5	N-	PHENYLTHIOUREA	100	–	?	–	–	•	–
57-41-0	–	PHENYTON	–	–	–	•	–	–	–
630-93-3	–	PHENYTON, SODIUM SALT OF	–	–	–	•	–	–	–
298-02-2	–	PHORATE	10	10	•	•	–	•	–
4104-14-7	–	PHOSACETIM	1	100/10000	•	–	–	–	•
947-02-4	–	PHOSFOLAN	1	100/10000	•	–	–	–	•
75-44-5	–	PHOSGENE	10	10	•	•	•	•	1
732-11-6	–	PHOSMET	1	10/10000	•	–	–	–	•
13171-21-6	–	PHOSPHAMIDON	1	100	•	–	–	–	•
7803-51-2	–	PHOSPHINE	100	500	•	•	–	•	–
2665-30-7	–	PHOSPHONOTHIOIC ACID, METHYL-, O-(4-NITROPHENYL) O-PHENYL ESTER	1	500	•	–	–	–	•
2703-13-1	–	PHOSPHONOTHIOIC ACID, METHYL-, O-ETHYL O-(4-(METHYLTHIO)PHENYL) ESTER	1	500	•	–	–	–	•
50782-69-9	–	PHOSPHONOTHIOIC ACID, METHYL-, S-(2-[BIS-	1	100	•	–	–	–	•
[illegible]-38-2	–	PHOSPHORIC ACID	5000	–	–	•	•	•	–
[illegible]-22-4	–	PHOSPHORIC ACID DIMETHYL 1-METHYL-3-(METHYLAMINO)-3-OXO-1-PROPENYLESTR	–	–	?	•	–	–	–

CAS or Other ID No		CHEMICAL NAME	RQ	TPQ	EHS	OSH	TOXIC	CERCLA	NOTES
311-45-5	–	PHOSPHORIC ACID, DIETHYL P-NITROPHENYL ESTER	100	–	–	–	–	•	–
3254-63-5	–	PHOSPHORIC ACID, DIMETHYL 4-(METHYLTHIO)PHENYL ESTER	1	500	•	–	–	–	•
7446-27-7	–	PHOSPHORIC ACID, LEAD SALT	1	–	–	?	–	•	–
298-02-2	–	PHOSPHORODITHIOIC ACID,O,O-DIETHYL S-(ETHYLTHIO) METHYL ESTER	10	–	?	?	–	•	–
3288-58-2	–	PHOSPHORODITHIOIC ACID,O,O-DIETHYL S-METHYLESTER	5000	–	–	–	–	•	–
60-51-5	–	PHOSPHORODITHIOIC ACID,O,O-DIMETHYL S-[2(METHYLAMINO)-2-OXOETHYL]ESTER	10	–	?	–	–	•	–
56-91-4	–	PHOSPHOROFLUORIDIC ACID, BIS(1-METHYLETHYL) ESTER	100	–	?	–	–	•	–
2587-90-8	–	PHOSPHOROTHIOIC ACID, O,O-DIMETHYL-S-2-METHYLTHIO) ETHYL ESTER	1	500	•	–	–	–	ccg
56-38-2	–	PHOSPHOROTHIOIC ACID,O,O-DIETHYL O-(P-NITROPHENYL) ESTER	10	–	?	?	?	•	–
297-97-2	–	PHOSPHOROTHIOIC ACID,O,O-DIETHYL O-PYRAZINYL ESTER	100	–	?	–	–	•	–
52-85-7	–	PHOSPHOROTHIOIC ACID,O,O-DIMETHYL O-(P-[(DIMETHYLAMINO)...(SEE FAMPHUR)	1000	–	–	–	–	•	–
7723-14-0	–	PHOSPHOROUS (YELLOW OR WHITE)	–	–	?	?	•	?	–
7723-14-0	–	PHOSPHORUS	1	100	•	•	?	•	bh
7723-14-0	–	PHOSPHORUS (YELLOW)	–	–	?	•	?	?	–
10025-87-3	–	PHOSPHORUS OXYCHLORIDE	1000	500	•	•	–	•	d
10026-13-8	–	PHOSPHORUS PENTACHLORIDE	1	500	•	•	–	–	be
1314-80-3	–	PHOSPHORUS PENTASULFIDE	100	–	–	•	–	•	–
1314-56-3	–	PHOSPHORUS PENTOXIDE	1	10	•	–	–	–	be
1314-80-3	–	PHOSPHORUS SULFIDE	100	–	–	?	–	•	–
7719-12-2	–	PHOSPHORUS TRICHLORIDE	1000	1000	•	•	–	•	–
–	–	PHTHALATE ESTERS	–	–	–	–	–	•	–
85-44-9	–	PHTHALIC ANHYDRIDE	5000	–	–	•	•	•	–
626-17-5	M-	PHTHALODINITRILE	–	–	–	•	–	–	–
57-47-6	–	PHYSOSTIGMINE	1	100/10000	•	–	–	–	•
57-64-7	–	PHYSOSTIGMINE, SALICYLATE (1:1)	1	100/10000	•	–	–	–	•
1918-02-1	–	PICLORAM	–	–	–	•	–	–	–
109-06-8	2-	PICOLINE	5000	–	–	–	–	•	–
88-89-1	–	PICRIC ACID	–	–	–	•	•	–	–
124-87-8	–	PICROTOXIN	1	500/10000	•	–	–	–	•
83-26-1	–	PINDONE	–	–	–	•	–	–	–
142-64-3	–	PIPERAZINE DIHYDROCHLORIDE	–	–	–	•	–	–	–
110-89-4	–	PIPERIDINE	1	1000	•	–	–	–	•
100-75-4	–	PIPERIDINE,1-NITROSO-	10	–	–	?	?	•	–
23505-41-1	–	PIRIMIFOS-ETHYL	1	1000	•	–	–	–	•
–	–	PLASTER OF PARIS	–	–	–	•	–	–	–
7440-06-4	–	PLATINUM, METAL	–	–	–	•	–	–	–
[illegible]	–	PLATINUM, SOLUBLE SALTS	–	–	–	•	–	–	–
[illegible]	–	PLUMBANE, TETRAETHYL-	10	–	?	?	–	•	–
59536-65-1	–	POLYBROMINATED BIPHENYLS	–	–	–	•	–	–	–
	–	POLYBROMINATED BIPHENYLS (PBBS) (SEE REGULATION FOR DEFINITION)	–	–	–	–	•	–	–
1336-36-3	–	POLYCHLORINATED BIPHENYLS (PCBS)	1	–	–	•	•	•	–
11096-82-5	–	POLYCHLORINATED BIPHENYLS (PCBS)	1	–	–	–	–	•	–
11097-69-1	–	POLYCHLORINATED BIPHENYLS (PCBS)	1	–	–	?	–	•	–
11104-28-2	–	POLYCHLORINATED BIPHENYLS (PCBS)	1	–	–	–	–	•	–
11141-16-5	–	POLYCHLORINATED BIPHENYLS (PCBS)	1	–	–	–	–	•	–
12672-29-6	–	POLYCHLORINATED BIPHENYLS (PCBS)	1	–	–	–	–	•	–
12674-11-2	–	POLYCHLORINATED BIPHENYLS (PCBS)	1	–	–	–	–	•	–
53469-21-9	–	POLYCHLORINATED BIPHENYLS (PCBS)	1	–	–	?	–	•	–
8001-35-2	–	POLYCHLORINATED CAMPHENE	–	–	?	•	?	?	–
–	–	POLYNUCLEAR AROMATIC HYDROCARBONS	–	–	–	–	–	•	–
–	–	POLYTETRAFLUOROETHYLENE DECOMPOSITION PRODUCTS	–	–	–	•	–	–	–
2581-09-8	–	PONCEAU 3R	–	–	–	•	–	–	–
2761-53-5	–	PONCEAU MX	–	–	–	•	?	–	–
3599[illegible]	–	PORTLAND CEMENT	–	–	–	•	–	–	–
7784-41-0	–	POTASSIUM ARSENATE	1	–	–	–	–	•	–
10124-50-2	–	POTASSIUM ARSENITE	1	500/10000	•	–	–	•	d

CAS or Other I.D. No.	CHEMICAL NAME		RQ	TPQ	EHS	OSH	TOXIC	CERCLA	NOTES
7778-50-9	–	POTASSIUM BICHROMATE	10	–	–	–	–	•	–
7789-00-6	–	POTASSIUM CHROMATE	10	–	–	–	–	•	–
151-50-8	–	POTASSIUM CYANIDE	10	100	•	•	–	•	b
1310-58-3	–	POTASSIUM HYDROXIDE	1000	–	–	•	–	•	–
7722-64-7	–	POTASSIUM PERMANGANATE	100	–	–	–	–	•	–
506-61-6	–	POTASSIUM SILVER CYANIDE	1	500	•	–	–	•	b
671-16-9	–	PROCARBAZINE	–	–	–	•	–	–	–
366-70-1	–	PROCARBAZINE HYDROCHLORIDE	–	–	–	•	–	–	–
57-83-0	–	PROGESTERONE	–	–	–	•	–	–	–
2631-37-0	–	PROMECARB	1	500/10000	•	–	–	–	a,b
23950-58-5	–	PRONAMIDE	5000	–	–	–	–	•	–
116-06-3	–	PROPANAL,2-METHYL-2-(METHYLTHIO)-, O-[(METHYLAMINO)CARBONYL]OXIME	1	–	?	–	–	•	–
107-10-8	1-	PROPANAMINE	5000	–	–	–	–	•	
142-84-7	1-	PROPANAMINE, N-PROPYL	5000	–	–	–	–	•	–
621-64-7	–	1-PROPANAMINE, N-NITROSO-N-PROPYL	10	–	–	?	?	•	–
74-98-6	–	PROPANE	–	–	–	•	–	–	–
1120-71-4	–	PROPANE SULTONE	–	–	–	•	•	?	–
1120-71-4	1,3-	PROPANE SULTONE	10	–	–	•	?	•	–
96-12-8	–	PROPANE, 1,2-DIBROMO-3-CHLORO	1	–	–	?	?	•	–
108-60-1	–	PROPANE, 2,2'-OXYBIS(2-CHLORO-	1000	–	–	–	?	•	–
79-46-9	–	PROPANE, 2-NITRO-	10	–	–	?	?	•	–
109-77-3	–	PROPANEDINITRILE	1000	–	?	–	–	•	–
107-12-0	–	PROPANENITRILE	10	–	?	–	–	•	–
75-86-5	–	PROPANENITRILE, 2-HYDROXY-2-METHYL-	10	–	?	–	–	•	–
542-76-7	–	PROPANENITRILE, 3-CHLORO-	1000	–	?	–	–	•	–
55-63-0	1,2,3-	PROPANETRIOL, TRINITRATE-	10	–	–	?	?	•	–
[illegible]72-7	1-	PROPANOL, 2,3-DIBROMO-, PHOSPHATE (3:1)	10	–	–	?	?	•	–
[illegible]-1	1-	PROPANOL, 2-METHYL-	5000	–	–	?	–	•	–
[illegible]-1	2-	PROPANONE	5000	–	–	?	?	•	–
[illegible]1-2	2-	PROPANONE, 1-BROMO-	1000	–	–	–	–	•	–
[illegible]35-8	–	PROPARGITE	10	–	–	–	–	•	–
[illegible]19-7	–	PROPARGYL ALCOHOL	1000	–	–	•	–	•	–
106-96-7	–	PROPARGYL BROMIDE	1	10	•	–	–	–	e
107-18-6	2-	PROPEN-1-OL	100	–	?	?	–	•	–
107-02-8	2-	PROPENAL	1	–	?	?	?	•	–
79-06-1	2-	PROPENAMIDE	5000	–	?	?	?	•	–
1888-71-7	1-	PROPENE, 1,1,2,3,3,3-HEXACHLORO-	1000	–	–	–	–	•	–
542-75-6	–	PROPENE, 1,3-DICHLORO	100	–	–	?	?	•	–
107-13-1	2-	PROPENENITRILE	100	–	?	?	?	•	–
126-98-7	2-	PROPENENITRILE, 2-METHYL	1000	–	?	?	–	•	–
79-10-7	2-	PROPENOIC ACID	5000	–	–	?	?	•	–
97-63-2	2-	PROPENOIC ACID, 2-METHYL-, ETHYL ESTER	1000	–	–	–	–	•	–
80-62-6	2-	PROPENOIC ACID, 2-METHYL-, METHYL ESTER	1000	–	–	?	?	•	–
140-88-5	2-	PROPENOIC ACID, ETHYL ESTER	1000	–	–	?	?	•	–
57-57-8	BETA-	PROPIOLACTONE	1	500	•	•	•	–	e
123-38-6	–	PROPIONALDEHYDE	–	–	–	–	•	–	–
79-09-4	–	PROPIONIC ACID	5000	–	–	•	–	•	–
93-72-1	–	PROPIONIC ACID, 2-(2,4,5-TRICHLOROPHENOXY)-	100	–	–	–	–	•	–
123-62-6	–	PROPIONIC ANHYDRIDE	5000	–	–	–	–	•	–
107-12-0	–	PROPIONITRILE	10	500	•	–	–	?	–
542-76-7	–	PROPIONITRILE, 3-CHLORO-	1000	1000	•	–	–	?	–
70-69-9	–	PROPIOPHENONE, 4-AMINO	1	100/10000	•	–	–	–	a,g
114-26-1	–	PROPOXUR	–	–	–	•	•	–	–
109-60-4	N-	PROPYL ACETATE	–	–	–	•	–	–	–
71-23-8	–	PROPYL ALCOHOL	–	–	–	•	–	–	–
109-61-5	–	PROPYL CHLOROFORMATE	1	500	•	–	–	–	e
627-13-4	N-	PROPYL NITRATE	–	–	–	•	–	–	–
107-10-8	N-	PROPYLAMINE	5000	–	–	–	–	•	–
115-07-1	–	PROPYLENE	–	–	–	•	?	–	–
115-07-1	–	PROPYLENE (PROPENE)	–	–	–	?	•	–	–
78-87-5	–	PROPYLENE DICHLORIDE	1000	–	–	•	?	•	–
6423-43-4	–	PROPYLENE GLYCOL DINITRATE (PGDN)	–	–	–	•	–	–	–
98-2	–	PROPYLENE GLYCOL MONOMETHYL ETHER	–	–	–	•	–	–	–
6-9	–	PROPYLENE OXIDE	100	10000	•	•	•	•	1
-8	–	PROPYLENEIMINE	1	10000	•	•	•	?	d
-8	1,2-	PROPYLENIMINE	1	–	?	?	?	•	–

CAS or Other No.		CHEMICAL NAME	RQ	TPQ	EHS	OSH	TOXIC	CERCLA	NOTES
51-52-5	–	PROPYLTHIOURACIL	–	–	–	•	–	–	–
107-19-7	2-	PROPYN-1-OL	1000	–	–	?	–	•	–
2275-18-5	–	PROTHOATE	1	100/10000	•	–	–	–	•
129-00-0	–	PYRENE	5000	1000/10000	•	•	–	•	c
121-21-1	–	PYRETHRINS	1	–	–	–	–	•	–
121-29-9	–	PYRETHRINS	1	–	–	–	–	•	–
8003-34-7	–	PYRETHRINS	1	–	–	?	–	•	–
8003-34-7	–	PYRETHRUM	–	–	–	•	–	?	–
504-24-5	4-	PYRIDINAMINE	1000	–	?	–	–	•	–
110-86-1	–	PYRIDINE	1000	–	–	•	•	•	–
54-11-5	–	PYRIDINE, (S)-3-(1-METHYL-2-PYRROLIDINYL)-, AND SALTS	100	–	?	?	–	•	–
109-06-8	–	PYRIDINE, 2-METHYL-	5000	–	–	–	–	•	–
140-76-1	–	PYRIDINE, 2-METHYL-5-VINYL-	1	500	•	–	–	–	•
91-80-5	–	PYRIDINE, 2-[(2-(DIMETHYLAMINO)ETHYL)-2-THENYLAMINO]-	5000	–	–	–	–	•	–
504-24-5	–	PYRIDINE, 4-AMINO-	1000	500/10000	•	–	–	?	b
1124-33-0	–	PYRIDINE, 4-NITRO-, 1-OXIDE	1	500/10000	•	–	–	–	c
100-75-4	–	PYRIDINE, HEXAHYDRO-N-NITROSO-	1	–	–	?	?	•	–
66-75-1	2,4-(1H,3H)-	PYRIMIDINEDIONE, 5-[BIS(2-CHLOROETHYL)AMINO]	10	–	–	?	–	•	–
56-04-2	4(1H)-	PYRIMIDINONE, 2,3-DIHYDRO-6-METHYL-2-THIOXO-	10	–	–	?	–	•	–
53558-25-1	–	PYRIMINIL	1	100/10000	•	–	–	–	cb
107-49-3	–	PYROPHOSPHORIC ACID, TETRAETHYL ESTER	10	–	?	?	–	•	–
930-55-2	–	PYRROLIDINE,1-NITROSO	1	–	–	?	–	•	–
14808-60-7	–	QUARTZ, RESPIRABLE	–	–	–	•	–	–	–
14808-60-7	–	QUARTZ, TOTAL DUST	–	–	–	•	–	–	–
91-22-5	–	QUINOLINE	5000	–	–	–	•	•	–
106-51-4	–	QUINONE	–	–	–	•	•	?	–
82-68-8	–	QUINTOZENE [PENTACHLORONITROBENZENE]	100	–	–	–	•	•	–
–	–	RADIONUCLIDES	1	–	–	–	–	•	√
50-55-5	–	RESERPINE	5000	–	–	•	–	•	–
108-46-3	–	RESORCINOL	5000	–	–	•	–	•	–
7440-16-6	–	RHODIUM, INSOLUBLE COMPOUNDS	–	–	–	•	–	–	–
7440-16-6	–	RHODIUM, METAL (FUME AND DUSTS)	–	–	–	•	–	–	–
7440-16-6	–	RHODIUM, SOLUBLE COMPOUNDS	–	–	–	•	–	–	–
7440-16-6	–	RHODIUM, SOLUBLE SALTS	–	–	–	•	–	–	–
299-84-3	–	RONNEL	–	–	–	•	–	–	–
–	–	ROSIN CORE SOLDER PYROLYSIS PRODUCTS, AS FORMALDEHYDE	–	–	–	•	–	–	–
83-79-4	–	ROTENONE (COMMERCIAL)	–	–	–	•	–	–	–
–	–	ROUGE [IRON (III) OXIDE]	–	–	–	•	–	–	–
8030-30-6	–	RUBBER SOLVENT (NAPHTHA)	–	–	–	•	–	–	–
81-07-2	–	SACCHARIN (MANUFACTURING) (SEE REGULATION) [1,2-BENZISOTHIAZOL-3(2H)-O	–	–	–	?	•	?	–
81-07-2	–	SACCHARIN (SACCHARINE)	–	–	–	•	?	?	–
81-07-2	–	SACCHARIN AND SALTS	100	–	–	?	?	•	–
94-59-7	–	SAFROLE	100	–	–	•	•	•	–
14167-18-1	–	SALCOMINE	1	500/10000	•	–	–	–	•
107-44-8	–	SARIN	1	10	•	–	–	–	cb
7783-00-8	–	SELENIOUS ACID	10	1000/10000	•	–	–	•	–
7782-49-2	–	SELENIUM	100	–	–	•	•	•	–
7782-49-2	–	SELENIUM COMPOUNDS	–	–	–	•	?	?	–
–	–	SELENIUM COMPOUNDS (SEE REGULATION FOR DEFINITION)	–	–	–	–	•	•	–
7746-08-4	–	SELENIUM DIOXIDE	10	–	–	–	–	•	–
7488-56-4	–	SELENIUM SULFIDE	10	–	–	–	–	•	–
7488-56-4	–	SELENIUM SULFIDE SES2	10	–	–	–	–	•	–
7783-79-1	–	SELENIUM HEXAFLUORIDE	–	–	–	•	–	–	–
7746-08-4	–	SELENIUM OXIDE	10	–	–	–	–	•	–
7791-23-3	–	SELENIUM OXYCHLORIDE	1	500	•	–	–	–	c
7446-34-6	–	SELENIUM SULFIDE (SES)	–	–	–	•	–	–	–
630-10-4	–	SELENOUREA	1000	–	–	–	–	•	–
563-41-7	–	SEMICARBAZIDE HYDROCHLORIDE	1	1000/10000	•	–	–	–	•
115-02-6	L-	SERINE, DIAZOACETATE (ESTER)	1	–	–	?	–	•	–

CAS or Other		CHEMICAL NAME	RQ	TPQ	EHS	OSH	TOXIC	CERCLA	NOTES
136-78-7	–	SESONE	–	–	–	•	–	–	–
–	–	SHALE OILS, BITUMENS	–	–	–	•	–	–	–
–	–	SHALE OILS, COMMERCIAL BLENDS	–	–	–	•	–	–	–
–	–	SHALE OILS, CRUDE–DISTILLATION FRACTIONS	–	–	–	•	–	–	–
–	–	SHALE OILS, CRUDE–HIGH TEMPERATURE AND FRACTIONS	–	–	–	•	–	–	–
–	–	SHALE OILS, CRUDE–LOW TEMPERATURE	–	–	–	•	–	–	–
3037-72-7	–	SILANE, (4-AMINOBUTYL)DIETHOXYMETHYL-	1	1000	•	–	–	–	•
[illegible]-86-9	–	SILICA, CRYSTALLINE	–	–	–	•	–	–	–
63231-67-4	–	SILICA, GEL	–	–	–	•	–	–	–
10193-36-9	–	SILICA, PRECIPITATED	–	–	–	•	–	–	–
7631-86-9	–	SILICA, SIO2, AMORPHOUS	–	–	–	•	–	–	–
60676-86-0	–	SILICA, SIO2, AMORPHOUS–SILICA, FUSED	–	–	–	•	–	–	–
7440-21-3	–	SILICON	–	–	–	•	–	–	–
409-21-2	–	SILICON CARBIDE	–	–	–	•	–	–	–
7803-62-5	–	SILICON TETRAHYDRIDE (SILANE)	–	–	–	•	–	–	–
7440-22-4	–	SILVER	1000	–	–	•	•	•	–
–	–	SILVER COMPOUNDS (SEE REGULATION FOR DEFINITION)	–	–	–	–	•	•	–
506-64-9	–	SILVER CYANIDE	1	–	–	–	–	•	–
7761-88-8	–	SILVER NITRATE	1	–	–	–	–	•	–
7440-22-4	–	SILVER, SOLUBLE COMPOUNDS	–	–	–	•	?	?	–
93-72-1	–	SILVEX	100	–	–	–	–	•	–
–	–	SOAPSTONE	–	–	–	•	–	–	–
7440-23-5	–	SODIUM	10	–	–	–	–	•	–
[illegible]1-89-2	–	SODIUM ARSENATE	1	1000/10000	•	•	–	•	d
[illegible]-46-5	–	SODIUM ARSENITE	1	500/10000	•	•	–	•	d
[illegible]8-22-8	–	SODIUM AZIDE	1000	–	?	•	–	•	–
[illegible]8-22-8	–	SODIUM AZIDE (NA(N3))	1000	500	•	?	–	?	b
[illegible]8-01-9	–	SODIUM BICHROMATE	10	–	–	–	–	•	–
[illegible]33-83-1	–	SODIUM BIFLUORIDE	100	–	–	–	–	•	–
7631-90-5	–	SODIUM BISULFITE	5000	–	–	•	–	•	–
124-65-2	–	SODIUM CACODYLATE	1	100/10000	•	–	–	–	•
7775-11-3	–	SODIUM CHROMATE	10	–	–	–	–	•	–
143-33-9	–	SODIUM CYANIDE	10	–	?	•	–	•	–
143-33-9	–	SODIUM CYANIDE (NA(CN))	10	100	•	?	–	?	b
25155-30-0	–	SODIUM DODECYLBENZENE SULFONATE	1000	–	–	–	–	•	–
7681-49-4	–	SODIUM FLUORIDE	1000	–	–	–	–	•	–
62-74-8	–	SODIUM FLUOROACETATE	10	10/10000	•	•	–	?	–
16721-80-5	–	SODIUM HYDROSULFIDE	5000	–	–	–	–	•	–
1310-73-2	–	SODIUM HYDROXIDE	1000	–	–	•	?	•	–
7681-52-9	–	SODIUM HYPOCHLORITE	100	–	–	–	–	•	–
10022-70-5	–	SODIUM HYPOCHLORITE	100	–	–	–	–	•	–
7681-57-4	–	SODIUM METABISULFITE	–	–	–	•	–	–	–
[illegible]	–	SODIUM METHYLATE	1000	–	–	–	–	•	–
[illegible]	–	SODIUM NITRITE	100	–	–	–	–	•	–
7558-79-4	–	SODIUM PHOSPHATE, DIBASIC	5000	–	–	–	–	•	–
10039-32-4	–	SODIUM PHOSPHATE, DIBASIC	5000	–	–	–	–	•	–
10140-65-5	–	SODIUM PHOSPHATE, DIBASIC	5000	–	–	–	–	•	–
7601-54-9	–	SODIUM PHOSPHATE, TRIBASIC	5000	–	–	–	–	•	–
7758-29-4	–	SODIUM PHOSPHATE, TRIBASIC	5000	–	–	–	–	•	–
7785-84-4	–	SODIUM PHOSPHATE, TRIBASIC	5000	–	–	–	–	•	–
10101-89-0	–	SODIUM PHOSPHATE, TRIBASIC	5000	–	–	–	–	•	–
10124-56-8	–	SODIUM PHOSPHATE, TRIBASIC	5000	–	–	–	–	•	–
10361-89-4	–	SODIUM PHOSPHATE, TRIBASIC	5000	–	–	–	–	•	–
128-44-9	–	SODIUM SACCHARIN	–	–	–	•	–	–	–
12410-01-0	–	SODIUM SELENATE	1	100/10000	•	–	–	–	•
7782-82-3	–	SODIUM SELENITE	1000	–	–	–	–	•	–
10102-18-8	–	SODIUM SELENITE	100	100/10000	•	–	–	•	b
10102-20-2	–	SODIUM TELLURITE	1	500/10000	•	–	–	–	•
–	–	SOOTS, TARS AND MINERAL OILS	–	–	–	•	–	–	–
[illegible]-95-3	–	STANNANE,ACETOXYTRIPHENYL-	1	500/10000	•	–	–	–	•
9005-25-8	–	STARCH	–	–	–	•	–	–	–
–	–	STEARATES	–	–	–	•	–	–	–
[illegible]48-10-2	–	STERIGMATOCYSTIN	–	–	–	•	–	–	–
[illegible]3-52-3	–	STIBINE	–	–	–	•	–	–	–
[illegible]-41-3	–	STODDARD SOLVENT	–	–	–	•	–	–	–

CAS or Other I.D. No.	CHEMICAL NAME		RQ	TPQ	EHS	OSH	TOXIC	CERCLA	NOTES
18883-66-4	-	STREPTOZOTOCIN	1	-	-	•	-	•	-
7789-06-2	-	STRONTIUM CHROMATE	10	-	-	•	-	•	-
357-57-3	-	STRYCHNIDIN-10-ONE, 2,3-DIMETHOXY-	10	-	-	-	-	•	y,z
57-24-9	-	STRYCHNIDIN-10-ONE, AND SALTS	10	-	?	?	-	•	-
57-24-9	-	STRYCHNINE	10	100/10000	•	•	-	?	c
57-24-9	-	STRYCHNINE AND SALTS	10	-	?	?	-	•	-
60-41-3	-	STRYCHNINE, SULFATE	1	100/10000	•	-	-	-	e
100-42-5	-	STYRENE	1000	-	-	•	?	•	-
100-42-5	-	STYRENE	-	-	-	•	•	•	-
100-42-5	-	STYRENE (MONOMER)	-	-	-	•	?	?	-
96-09-3	-	STYRENE OXIDE	-	-	-	•	•	-	-
1395-21-7	-	SUBTILISINS (PROTEOLYTIC ENZYMES AS 100% PURE CRYSTALLINE ENZYME)	-	-	-	•	-	-	-
57-50-1	-	SUCROSE	-	-	-	•	-	-	-
95-06-7	-	SULFALLATE	-	-	-	•	-	-	-
3689-24-5	-	SULFOTEP	100	500	•	•	-	?	-
3569-57-1	-	SULFOXIDE, 3-CHLOROPROPYL OCTYL	1	500	•	-	-	-	e
10025-67-9	-	SULFUR CHLORIDE /S2CL2/	-	-	-	•	-	-	-
7446-09-5	-	SULFUR DIOXIDE	1	500	•	•	-	-	e
2551-62-4	-	SULFUR HEXAFLUORIDE	-	-	-	•	-	-	-
7783-06-4	-	SULFUR HYDRIDE	100	-	?	?	-	•	-
10025-67-9	-	SULFUR MONOCHLORIDE	-	-	-	•	-	-	-
12771-08-3	-	SULFUR MONOCHLORIDE	1000	-	-	-	-	•	-
5714-22-7	-	SULFUR PENTAFLUORIDE	-	-	-	•	-	-	-
1314-80-3	-	SULFUR PHOSPHIDE	100	-	-	?	-	•	-
7488-56-4	-	SULFUR SELENIDE	1	-	-	-	-	•	-
7783-60-0	-	SULFUR TETRAFLUORIDE	1	100	•	•	-	-	e
7446-11-9	-	SULFUR TRIOXIDE	1	100	•	-	-	-	b
7664-93-9	-	SULFURIC ACID	1000	1000	•	•	•	•	-
8014-95-7	-	SULFURIC ACID	1000	-	-	-	-	•	-
77-78-1	-	SULFURIC ACID, DIMETHYL ESTER	100	-	?	?	?	•	-
7446-18-6	-	SULFURIC ACID, THALLIUM(I) SALT	100	-	?	-	-	•	-
10031-59-1	-	SULFURIC ACID, THALLIUM(I) SALT	100	-	?	-	-	•	-
2699-79-8	-	SULFURYL FLUORIDE	-	-	-	•	-	-	-
35400-43-2	-	SULPROFOS	-	-	-	•	-	-	-
93-76-5	2,4,5-	T	1000	-	-	•	-	•	-
93-76-5	2,4,5-	T ACID	1000	-	-	?	-	•	-
1319-72-8	2,4,5-	T AMINES	5000	-	-	-	-	•	-
2008-46-0	2,4,5-	T AMINES	5000	-	-	-	-	•	-
3813-14-7	2,4,5-	T AMINES	5000	-	-	-	-	•	-
6369-96-6	2,4,5-	T AMINES	5000	-	-	-	-	•	-
6369-97-7	2,4,5-	T AMINES	5000	-	-	-	-	•	-
93-79-8	2,4,5-	T ESTERS	1000	-	-	-	-	•	-
1928-47-8	2,4,5-	T ESTERS	1000	-	-	-	-	•	-
2545-59-7	2,4,5-	T ESTERS	1000	-	-	-	-	•	-
25168-15-4	2,4,5-	T ESTERS	1000	-	-	-	-	•	-
61792-07-2	2,4,5-	T ESTERS	1000	-	-	-	-	•	-
13560-99-1	2,4,5-	T SALTS	1000	-	-	-	-	•	-
77-81-6	-	TABUN	1	10	•	-	-	-	ab
14807-96-6	-	TALC (FIBROUS)	-	-	-	•	-	-	-
14807-96-6	-	TALC (NON-ASBESTOS FORM)	-	-	-	•	-	-	-
7440-25-7	-	TANTALUM	-	-	-	•	-	-	-
72-54-8	-	TDE	1	-	-	-	-	•	-
13494-80-9	-	TELLURIUM	1	500/10000	•	?	-	-	e
13494-80-9	-	TELLURIUM AND COMPOUNDS	-	-	?	•	-	-	-
7783-80-4	-	TELLURIUM HEXAFLUORIDE	1	100	•	•	-	-	a,k
3383-96-8	-	TEMEPHOS	-	-	-	•	-	-	-
107-49-3	-	TEPP	10	100	•	•	-	?	-
13071-79-9	-	TERBUFOS	1	100	•	-	-	-	ab
100-21-0	-	TEREPHTHALIC ACID	-	-	-	-	•	-	-
26140-60-3	-	TERPHENYLS	-	-	-	•	-	-	-
61788-32-7	-	TERPHENYLS, HYDROGENATED	-	-	-	•	-	-	-
58-22-0	-	TESTOSTERONE	-	-	-	•	-	-	-
-	-	TESTOSTERONE AND ESTERS	-	-	-	•	-	-	-
315-37-7	-	TESTOSTERONE OENANTHATE	-	-	-	•	-	-	-
57-85-2	-	TESTOSTERONE PROPRIONATE	-	-	-	•	-	-	-
76-12-0	1,1,2,2-	TETRACHLORO-1-2-DIFLUOROETHANE	-	-	-	•	-	-	-
76-11-9	1,1,1,2-	TETRACHLORO-2-2-DIFLUOROETHANE	-	-	-	•	-	-	-
95-94-3	1,2,4,5-	TETRACHLOROBENZENE	5000	-	-	-	-	•	-
1746-01-6	-	TETRACHLORODIBENZO-DIOXIN	-	-	-	•	-	?	-
1746-01-6	2,3,7,8-	TETRACHLORODIBENZO-P-DIOXIN(TCDD)	1	-	-	?	-	•	-

CAS or Other I.D. No.	CHEMICAL NAME		RQ	TPQ	EHS	OSH	TOXIC	CERCLA	NOTES
–	–	TETRACHLORODIBENZO-PARA-DIOXIN	–	–	–	•	–	–	–
79-34-5	1,1,2,2-	TETRACHLOROETHANE	100	–	–	?	•	•	–
630-20-6	1,1,1,2-	TETRACHLOROETHANE	100	–	–	–	–	•	–
127-18-4	–	TETRACHLOROETHENE	100	–	–	?	?	•	–
127-18-4	–	TETRACHLOROETHYLENE	100	–	–	?	?	•	–
127-18-4	–	TETRACHLOROETHYLENE (PERCHLOROETHYLENE)	100	–	–	•	•	•	–
1335-88-2	–	TETRACHLORONAPHTHALENE	–	–	–	•	–	–	–
58-90-2	2,3,4,6-	TETRACHLOROPHENOL	10	–	–	–	–	•	–
961-11-5	–	TETRACHLORVINPHOS (PHOSPHORIC ACID,2-CHLORO-1-(2,4,5-TRICHLOROPHENYL)	–	–	–	–	•	–	–
78-00-2	–	TETRAETHYL LEAD	10	100	•	•	–	•	c,d
107-49-3	–	TETRAETHYL PYROPHOSPHATE	10	–	?	?	–	•	–
3689-24-5	–	TETRAETHYLDITHIOPYROPHOSPHATE	100	–	?	•	–	•	–
597-64-8	–	TETRAETHYLTIN	1	100	•	–	–	–	c,e
109-99-9	–	TETRAHYDROFURAN	1000	–	–	•	–	•	–
75-74-1	–	TETRAMETHYL LEAD	1	100	•	•	–	–	c,d
3333-52-6	–	TETRAMETHYLSUCCINONITRILE	–	–	–	•	–	–	–
509-14-8	–	TETRANITROMETHANE	10	500	•	•	–	•	–
757-58-4	–	TETRAPHOSPHORIC ACID, HEXAETHYL ESTER	100	–	–	–	–	•	–
7722-88-5	–	TETRASODIUM PYROPHOSPHATE	–	–	–	•	–	–	–
479-45-8	–	TETRYL	–	–	–	•	–	–	–
1314-32-5	–	THALLIC OXIDE	100	–	–	–	–	•	–
7440-28-0	–	THALLIUM	1000	–	–	•	•	•	–
–	–	THALLIUM COMPOUNDS (SEE REGULATION FOR DEFINITION)	–	–	–	–	•	•	–
10031-59-1	–	THALLIUM SULFATE	100	100/10000	•	–	–	?	b
[illegible]-68-8	–	THALLIUM(I) ACETATE	100	–	–	–	–	•	–
[illegible]3-73-9	–	THALLIUM(I) CARBONATE	100	–	?	–	–	•	–
[illegible]91-12-0	–	THALLIUM(I) CHLORIDE	100	–	?	–	–	•	–
[illegible]02-45-1	–	THALLIUM(I) NITRATE	100	–	–	–	–	•	–
[illegible]39-52-0	–	THALLIUM(I) SELENIDE	1000	–	–	–	–	•	–
[illegible]46-18-6	–	THALLIUM(I) SULFATE	100	–	?	–	–	•	–
10031-59-1	–	THALLIUM(I) SULFATE	100	–	?	–	–	•	–
1314-32-5	–	THALLIUM(III) OXIDE	100	–	–	–	–	•	–
7440-28-0	–	THALLIUM, SOLUBLE COMPOUNDS	–	–	–	•	?	?	–
6533-73-9	–	THALLOUS CARBONATE	100	100/10000	•	–	–	?	c,b
7791-12-0	–	THALLOUS CHLORIDE	100	100/10000	•	–	–	?	c,b
2757-18-8	–	THALLOUS MALONATE	1	100/10000	•	–	–	–	c,b
7446-18-6	–	THALLOUS SULFATE	100	100/10000	•	–	–	?	–
62-55-5	–	THIOACETAMIDE	10	–	–	•	•	•	–
96-69-5	4,4'-	THIOBIS (6-TERT-BUTYL-M-CRESOL)	–	–	–	•	–	–	–
2231-57-4	–	THIOCARBAZIDE	1	1000/10000	•	–	–	–	e
139-65-1	4,4'-	THIODIANILINE	–	–	–	•	•	–	–
39196-18-4	–	THIOFANOX	100	100/10000	•	–	–	•	–
68-11-1	–	THIOGLYCOLIC ACID	–	–	–	•	–	–	–
74-93-1	–	THIOMETHANOL	100	–	?	?	–	•	–
541-53-7	–	THIOMIDODICARBONIC DIAMIDE	100	–	?	–	–	•	–
297-97-2	–	THIONAZIN	100	500	•	–	–	?	–
7719-09-7	–	THIONYL CHLORIDE	–	–	–	•	–	–	–
108-98-5	–	THIOPHENOL	100	500	•	?	–	•	–
79-19-6	–	THIOSEMICARBAZIDE	100	100/10000	•	–	–	•	–
62-56-6	–	THIOUREA	10	–	–	•	•	•	–
5344-82-1	–	THIOUREA, (2-CHLOROPHENYL)-	100	100/10000	•	–	–	•	–
614-78-8	–	THIOUREA, (2-METHYLPHENYL)-	1	500/10000	•	–	–	–	e
86-88-4	–	THIOUREA, 1-NAPHTHALENYL-	100	–	?	?	–	•	–
103-85-5	–	THIOUREA, PHENYL-	100	–	?	–	–	•	–
137-26-8	–	THIRAM	10	–	–	•	–	•	–
1314-20-1	–	THORIUM DIOXIDE	–	–	–	•	•	–	–
7440-31-5	–	TIN OXIDE AND INORGANIC COMPOUNDS EXCEPT SNH4	–	–	–	•	–	–	–
7440-31-5	–	TIN, INORGANIC COMPOUNDS, EXCEPT OXIDES	–	–	–	•	–	–	–
7440-31-5	–	TIN, METAL	–	–	–	•	–	–	–
7440-31-5	–	TIN, ORGANIC COMPOUNDS	–	–	–	•	–	–	–
13463-67-7	–	TITANIUM DIOXIDE	–	–	–	•	–	–	–
[illegible]0-45-0	–	TITANIUM TETRACHLORIDE	1	100	•	–	•	–	e
[illegible]9-93-7	O-	TOLIDINE	–	–	–	•	?	?	–
[illegible]-88-3	–	TOLUENE	1000	–	–	•	•	•	–
[illegible]84-9	–	TOLUENE 2,4-DIISOCYANATE	100	500	•	•	•	?	–

CAS or Other I.D. No.	CHEMICAL NAME		RQ	TPQ	EHS	OSH	TOXIC	CERCLA	NOTES
91-08-7	–	TOLUENE 2,6-DIISOCYANATE	100	100	•	•	•	?	–
91-08-7	–	TOLUENE DIISOCYANATE	100	–	?	?	?	•	–
584-84-9	–	TOLUENE DIISOCYANATE	100	–	?	?	?	•	–
26471-62-5	–	TOLUENE DIISOCYANATE	100	–	–	?	–	•	–
26471-62-5	–	TOLUENE DIISOCYANATE, COMMERCIAL MIXTURES	–	–	–	•	•	?	–
95-80-7	–	TOLUENEDIAMINE	10	–	–	?	?	•	–
496-72-0	–	TOLUENEDIAMINE	10	–	–	–	–	•	–
823-40-5	–	TOLUENEDIAMINE	10	–	–	–	–	•	–
25376-45-8	–	TOLUENEDIAMINE	10	–	–	–	?	•	–
95-53-4	O-	TOLUIDINE	100	–	–	•	•	•	–
106-49-0	P-	TOLUIDINE	100	–	–	•	–	•	–
108-44-1	M-	TOLUIDINE	–	–	–	•	–	–	–
636-21-5	O-	TOLUIDINE HYDROCHLORIDE	100	–	–	•	•	•	–
8001-35-2	–	TOXAPHENE	1	–	?	•	•	•	–
8001-35-2	O-	TOXAPHENE	1	–	?	?	?	•	–
93-72-1	2,4,5-	TP ACID	100	–	–	–	–	•	–
32534-95-5	2,4,5-	TP ACID ESTERS	100	–	–	–	–	•	–
14567-73-8	–	TREMOLITE	–	–	–	•	–	–	–
–	–	TREOSULPHAN	–	–	–	•	–	–	–
1031-47-6	–	TRIAMIPHOS	1	500/10000	•	–	–	–	•
68-76-8	–	TRIAZIQUONE (2,5-CYCLOHEXADIENE-1,4-DIONE, 2,3,4-TRIS (1-AZIRIDINYL)-)	–	–	–	?	•	–	–
24017-47-8	–	TRIAZOFOS	1	500	•	–	–	–	•
61-82-5	1H-1,2,4-	TRIAZOL-3-AMINE	10	–	–	?	–	•	–
126-73-8	–	TRIBUTYL PHOSPHATE	–	–	–	•	–	–	–
52-68-6	–	TRICHLORFON	100	–	–	–	?	•	–
52-68-6	–	TRICHLORFON (PHOSPHONIC ACID,(2,2,2-TRICHLORO-1-HYDROXYETHYL)-, DIMETHY	100	–	–	–	•	•	–
1558-25-4	–	TRICHLORO(CHLOROMETHYL)SILANE	1	100	•	–	–	–	•
27137-85-5	–	TRICHLORO(DICHLOROPHENYL)SILANE	1	500	•	–	–	–	•
76-13-1	1,1,2-	TRICHLORO-1,2,2-TRIFLUOROETHANE	–	–	–	•	?	–	–
76-03-9	–	TRICHLOROACETIC ACID	–	–	–	•	–	–	–
76-02-8	–	TRICHLOROACETYL CHLORIDE	1	500	•	–	–	–	•
120-82-1	1,2,4-	TRICHLOROBENZENE	100	–	–	•	•	•	–
71-55-6	1,1,1-	TRICHLOROETHANE	1000	–	–	?	?	•	–
79-00-5	1,1,2-	TRICHLOROETHANE	100	–	–	•	•	•	–
71-55-6	1,1,1-	TRICHLOROETHANE (METHYL CHLOROFORM)	–	–	–	?	•	?	–
79-01-6	–	TRICHLOROETHENE	100	–	–	?	?	•	–
79-01-6	–	TRICHLOROETHYLENE	100	–	–	•	•	•	–
115-21-9	–	TRICHLOROETHYLSILANE	1	500	•	–	–	–	eb
75-69-4	–	TRICHLOROFLUOROMETHANE	–	–	–	•	–	?	–
594-42-3	–	TRICHLOROMETHANESULFENYL CHLORIDE	100	–	?	?	–	•	–
75-69-4	–	TRICHLOROMONOFLUOROMETHANE	5000	–	–	?	–	•	–
[illegible]	–	TRICHLORONAPHTHALENE	–	–	–	•	–	–	–
[illegible]	–	TRICHLORONATE	1	500	•	–	–	–	eb
88-06-2	2,4,6-	TRICHLOROPHENOL	10	–	–	•	•	•	–
95-95-4	2,4,5-	TRICHLOROPHENOL	10	–	–	–	•	•	–
609-19-8	3,4,5-	TRICHLOROPHENOL	10	–	–	–	–	•	–
933-75-5	2,3,6-	TRICHLOROPHENOL	10	–	–	–	–	•	–
933-78-8	2,3,5-	TRICHLOROPHENOL	10	–	–	–	–	•	–
15950-66-0	2,3,4-	TRICHLOROPHENOL	10	–	–	–	–	•	–
25167-82-2	–	TRICHLOROPHENOL	10	–	–	–	–	•	–
93-76-5	2,4,5-	TRICHLOROPHENOXYACETIC ACID	1000	–	–	?	–	•	–
98-13-5	–	TRICHLOROPHENYLSILANE	1	500	•	–	–	–	eb
96-18-4	1,2,3-	TRICHLOROPROPANE	–	–	–	•	–	–	–
15468-32-3	–	TRIDYMITE	–	–	–	•	–	–	–
27323-41-7	–	TRIETHANOLAMINE DODECYLBENZENESULFONATE	1000	–	–	–	–	•	–
998-30-1	–	TRIETHOXYSILANE	1	500	•	–	–	–	•
121-44-8	–	TRIETHYLAMINE	5000	–	–	•	–	•	–
75-63-8	–	TRIFLUOROBROMOMETHANE	–	–	–	•	–	–	–
1582-09-8	–	TRIFLURALIN (BENZENEAMINE, 2,6-DINITRO-N,N-DIPROPYL-4-(TRIFLUOROMETHYL	–	–	–	–	•	–	–
552-30-7	–	TRIMELLITIC ANHYDRIDE	–	–	–	•	–	–	–
95-63-6	1,2,4-	TRIMETHYL BENZENE	–	–	–	–	•	–	–
25551-13-7	–	TRIMETHYL BENZENE	–	–	–	•	–	–	–

CAS or Other I.D. No.	CHEMICAL NAME		RQ	TPQ	EHS	OSH	TOXIC	CERCLA	NOTES
121-45-9	–	TRIMETHYL PHOSPHITE	–	–	–	•	–	–	–
75-50-3	–	TRIMETHYLAMINE	100	–	–	•	–	•	–
75-77-4	–	TRIMETHYLCHLOROSILANE	1	1000	•	–	–	–	•
824-11-3	–	TRIMETHYLOLPROPANE PHOSPHITE	1	100/10000	•	–	–	–	a,b
1066-45-1	–	TRIMETHYLTIN CHLORIDE	1	500/10000	•	–	–	–	•
99-35-4	SYM-	TRINITROBENZENE	10	–	–	–	–	•	–
118-96-7	2,4,6-	TRINITROTOLUENE	–	–	–	•	–	–	–
78-30-8	–	TRIORTHOCRESYL PHOSPHATE	–	–	–	•	–	–	–
123-63-7	1,3,5-	TRIOXANE, 2,4,6-TRIMETHYL-	1000	–	–	–	–	•	–
603-34-9	–	TRIPHENYL AMINE	–	–	–	•	–	–	–
115-86-6	–	TRIPHENYL PHOSPHATE	–	–	–	•	–	–	–
639-58-7	–	TRIPHENYLTIN CHLORIDE	1	500/10000	•	–	–	–	•
1317-95-9	–	TRIPOLI (SILICA, SIO2, CRYSTALLINE)	–	–	–	•	–	–	–
126-72-7	–	TRIS (2,3-DIBROMOPROPYL) PHOSPHATE	10	–	–	•	•	•	–
555-77-1	–	TRIS(2-CHLOROETHYL)AMINE	1	100	•	–	–	–	a,b
68-76-8	–	TRIS(AZIRIDINYL)-PARA-BENZOQUINONE	–	–	–	•	7	–	–
52-24-4	–	TRIS(AZIRIDINYL)-PHOSPHINE SULPHIDE (THIOTEPA)	–	–	–	•	–	–	–
62450-06-0	–	TRP-P-1	–	–	–	•	–	–	–
75104-43-7	–	TRP-P-1 ACETATE	–	–	–	•	–	–	–
68808-64-8	–	TRP-P-1 MONOACETATE	–	–	–	•	–	–	–
62450-07-[illegible]	–	TRP-P-2	–	–	–	•	–	–	–
72254-58-[illegible]	–	TRP-P-2 ACETATE	–	–	–	•	–	–	–
72-57-1	–	TRYPAN BLUE	10	–	–	7	–	•	–
7440-33-7	–	TUNGSTEN AND CEMENTED TUNGSTEN CARBIDE	–	–	–	•	–	–	–
7440-33-7	–	TUNGSTEN, INSOLUBLE COMPOUNDS	–	–	–	•	–	–	–
7440-33-7	–	TUNGSTEN, SOLUBLE COMPOUNDS	–	–	–	•	–	–	–
80[illegible]-54-2	–	TURPENTINE	–	–	–	•	–	–	–
6[illegible]	–	URACIL MUSTARD	10	–	–	•	–	•	–
7440-66-1	–	URANIUM (NATURAL), INSOLUBLE COMPOUNDS	–	–	–	•	–	–	–
[illegible]-1	–	URANIUM (NATURAL), SOLUBLE COMPOUNDS	–	–	–	•	–	–	–
541-09-3	–	URANYL ACETATE	100	–	–	–	–	•	–
10102-06-4	–	URANYL NITRATE	100	–	–	–	–	•	–
36478-76-9	–	URANYL NITRATE	100	–	–	–	–	•	–
684-93-5	–	UREA, N-METHYL-N-NITROSO	1	–	–	7	7	•	–
759-73-9	–	UREA, N-ETHYL-N-NITROSO	1	–	–	7	7	•	–
–	–	URETHANE	–	–	–	•	–	–	–
51-79-6	–	URETHANE (ETHYL CARBAMATE)	100	–	–	•	•	•	–
110-62-3	N-	VALERALDEHYDE	–	–	–	•	–	–	–
2001-95-8	–	VALINOMYCIN	1	1000/10000	•	–	–	–	c
7803-55-6	–	VANADIC ACID, AMMONIUM SALT	1000	–	–	–	–	•	–
7440-62-2	–	VANADIUM (FUME OR DUST)	–	–	–	–	•	–	–
1314-62-1	–	VANADIUM (V2O5)	–	–	7	•	–	7	–
1314-62-1	–	VANADIUM (V2O5), RESPIRABLE DUST AND FUME	–	–	7	•	–	7	–
1314-62-1	–	VANADIUM PENTOXIDE	1000	100/10000	•	•	–	•	–
1314-62-1	–	VANADIUM(V) OXIDE	1000	–	7	7	–	•	–
27774-13-6	–	VANADYL SULFATE	1000	–	–	–	–	•	–
–	–	VEGETABLE OIL MISTS	–	–	–	•	–	–	–
108-05-4	–	VINYL ACETATE	5000	–	7	•	•	•	–
108-05-4	–	VINYL ACETATE MONOMER	5000	1000	•	7	7	7	d
593-60-2	–	VINYL BROMIDE	–	–	–	•	•	–	–
75-01-4	–	VINYL CHLORIDE	1	–	–	•	•	•	–
100-40-3	4-	VINYL CYCLOHEXENE	–	–	–	•	–	–	–
106-87-6	–	VINYL CYCLOHEXENE DIOXIDE	–	–	–	•	–	–	–
25013-15-4	–	VINYL TOLUENE	–	–	–	•	–	–	–
75-35-4	–	VINYLIDENE CHLORIDE	100	–	–	•	•	•	–
75-38-7	–	VINYLIDENE FLUORIDE	–	–	–	•	–	–	–
81-81-2	–	WARFARIN	100	500/10000	•	•	–	•	–
129-06-6	–	WARFARIN SODIUM	1	100/10000	•	–	–	–	a,b
–	–	WELDING FUMES (NOC)	–	–	–	•	–	–	–
–	–	WOOD DUST, ALL SOFT AND HARD WOODS	–	–	–	•	–	–	–
95-47-6	O-	XYLENE	1000	–	–	•	•	•	–
106-42-3	P-	XYLENE	1000	–	–	•	•	•	–
1[illegible]-3	M-	XYLENE	1000	–	–	•	•	•	–
1[illegible]0-7	–	XYLENE	–	–	–	•	7	7	–
1[illegible]30-7	–	XYLENE (MIXED ISOMERS)	–	–	–	7	•	7	–
[illegible]-7	–	XYLENE (MIXED)	1000	–	–	7	7	•	–

CAS or Other I.D. No.	CHEMICAL NAME		RQ	TPQ	EHS	OSH	TOXIC	CERCLA	NOTES
1477-55-0	M-	XYLENE ALPHA,ALPHA'-DIAMINE	–	–	–	•	–	–	–
1300-71-6	–	XYLENOL	1000	–	–	–	–	•	–
1300-73-8	–	XYLIDENE	–	–	–	•	–	–	–
87-62-7	2,6-	XYLIDINE	–	–	–	–	•	–	–
28347-13-9	–	XYLYLENE DICHLORIDE	1	100/10000	•	–	–	–	e
50-55-5	–	YOHIMBAN-16-CARBOXYLIC ACID,11,17-DIMETHOXY-18-... (SEE RESERPINE)	5000	–	–	?	–	•	–
7440-65-5	–	YTTRIUM	–	–	–	•	–	–	–
7440-65-5	–	YTTRIUM METAL AND COMPOUNDS	–	–	–	•	–	–	–
7440-66-6	–	ZINC	1000	–	–	–	?	•	–
7440-66-6	–	ZINC (FUME AND DUST)	–	–	–	–	•	?	–
557-34-6	–	ZINC ACETATE	1000	–	–	–	–	•	–
14639-97-5	–	ZINC AMMONIUM CHLORIDE	5000	–	–	–	–	•	–
14639-98-6	–	ZINC AMMONIUM CHLORIDE	5000	–	–	–	–	•	–
52628-25-8	–	ZINC AMMONIUM CHLORIDE	1000	–	–	–	–	•	–
39413-47-3	–	ZINC BERYLLIUM SILICATE	–	–	–	•	–	–	–
1332-07-6	–	ZINC BORATE	1000	–	–	–	–	•	–
7699-45-8	–	ZINC BROMIDE	1000	–	–	–	–	•	–
3486-35-9	–	ZINC CARBONATE	1000	–	–	–	–	•	–
7646-85-7	–	ZINC CHLORIDE	1000	–	–	•	–	•	–
7646-85-7	–	ZINC CHLORIDE FUME	–	–	–	•	–	?	–
1103-86-9	–	ZINC CHROMATE	–	–	–	•	–	–	–
13530-65-9	–	ZINC CHROMATE	–	–	–	•	–	–	–
37300-23-5	–	ZINC CHROMATE AS CR	–	–	–	•	–	–	–
–	–	ZINC COMPOUNDS (SEE REGULATION FOR DEFINITION)	–	–	–	–	•	•	–
557-21-1	–	ZINC CYANIDE	10	–	–	–	–	•	–
7783-49-5	–	ZINC FLUORIDE	1000	–	–	–	–	•	–
557-41-5	–	ZINC FORMATE	1000	–	–	–	–	•	–
7779-86-4	–	ZINC HYDROSULFITE	1000	–	–	–	–	•	–
7779-88-6	–	ZINC NITRATE	1000	–	–	–	–	•	–
1314-13-2	–	ZINC OXIDE	–	–	–	•	–	–	–
1314-13-2	–	ZINC OXIDE DUST	–	–	–	•	–	–	–
1314-13-2	–	ZINC OXIDE FUME	–	–	–	•	–	–	–
127-82-2	–	ZINC PHENOLSULFONATE	5000	–	–	–	–	•	–
1314-84-7	–	ZINC PHOSPHIDE	100	500	•	–	–	•	b
16871-71-9	–	ZINC SILICOFLUORIDE	5000	–	–	–	–	•	–
557-05-1	–	ZINC STEARATE	–	–	–	•	–	–	–
7733-02-0	–	ZINC SULFATE	1000	–	–	–	–	•	–
58270-08-9	–	ZINC, DICHLORO(4,4-DIMETHYL-5-[[(METHYLAMINO)...	1	100/10000	•	–	–	–	e
12122-67-7	–	ZINEB [CARBAMODITHIOIC ACID, 1,2-ETHANEDIYLBIS-, ZINC COMPLEX]	–	–	–	–	•	–	–
7440-67-7	–	ZIRCONIUM	–	–	–	•	–	–	–
7440-67-7	–	ZIRCONIUM COMPOUNDS	–	–	–	•	–	–	–
13746-89-9	–	ZIRCONIUM NITRATE	5000	–	–	–	–	•	–
16923-95-8	–	ZIRCONIUM POTASSIUM FLUORIDE	1000	–	–	–	–	•	–
14644-61-2	–	ZIRCONIUM SULFATE	5000	–	–	–	–	•	–
10026-11-6	–	ZIRCONIUM TETRACHLORIDE	5000	–	–	–	–	•	–

Notes:

a—This chemical does not meet acute toxicity criteria. Its TPQ is set at 10,000 pounds.
b—This material is a reactive solid. The TPQ does not default to 10,000 pounds for non-powder, non-molten, non-solution form.
c—EPA changed the calculated TPQ and the reader is referred to the Federal Register of April 22, 1987 for further details.
d—EPA has indicated that the RQ is likely to change when the assessment of potential carcinogenicity and chronic toxicity is completed.
e—Statutory reportable quantity for purposes of notification under SARA Section 304(a)(2) of the Emergency Planning and Community Right to Know Act.
f—EPA has indicated that the statutory 1 pound reportable quantity for methyl isocyanate may be adjusted in a future rulemaking action.
g—New chemicals added that were not part of the original list of 402 substances.
h—Revised TPQ based on new or re-evaluated toxicity data.
j—TPQ is revised to its calculated value and does not change due to technical review as in proposed rule.
k—The TPQ was revised after proposal due to calculation error.
l—Chemicals on the original list that do not meet the toxicity criteria but because of their high production volume and recognized toxicity are considered chemicals of concern.
m—Hydrogen Chloride is an extremely hazardous substance for the gas only.
w—EPA has listed hydrogen peroxide as an extremely hazardous substance in concentrations greater than 52%.

†—A dagger indicates that the material is a hazardous waste under RCRA. The entries have been abbreviated in the space available. For a complete description, the reader should refer to the Federal Register of April 4, 1985, September 29, 1986, and August 14, 1989.

‡—A discrepancy occurs between EPA's listing for the hazardous substance and EPA's listing of its regulatory synonym. Please consult the CAS listing for this substance and the original regulation.

§—This code indicates that the user may wish to compare the final regulations of the Department of Transportation for discharge reporting (see 52 Fed. Reg. 42174, November 21, 1986) and the final regulations of EPA establishing reportable quantities under CERCLA (see 51 Fed. Reg. 34534, September 29, 1986). A difference exists between the reportable quantities established by the two agencies.

¶—No reporting of releases of this hazardous substance is required if the diameter of the pieces of the solid metal released is equal to or exceeds 100 micrometers (0.004 inches).

‖—RQs now measured in curies for 1500 radionuclides, see 54 FR 22524, May 24, 1989.

APPENDIX C

EVACUATION PLAN

In the event of a sudden and uncontrollable occurrence such as a fire, explosion, or major uncontrollable chemical spill, and if the degree of risk precludes making an effort to stop or diminish the effects of the occurrence, the area of the occurrence should be evacuated immediately and in an orderly and efficient manner. Employees should utilize any of several exits (described below) available at the treatment areas.

The facility has a public address (PA) system throughout the manufacturing facility. There are also telephones located throughout the facility. These telephones can access the PA system. In case of an emergency a first observer (employee) of the incident or emergency can access the PA system and announce the need to evacuate. There is a PA system in the Concentrated Waste Treatment Plant Main Building (CWTP-1) and there will be a PA system in the new Centralized Waste Storage and Transfer Facility (CWS&TF). In all other emergencies the public address system in these buildings will be used to notify all personnel of emergency evacuation instructions.

Once evacuation has been called, employees shall proceed to the nearest building exit, leave the area, and assemble in front of the Maintenance Building on Willow Street immediately for check in. Employees evacuating from the Colt Street treatment plant should also proceed to the front of the Maintenance Building on Willow Street immediately for check in using any available transportation. If transportation is not available, employees shall assemble at the following locations and await further instructions.

- Colt Street Treatment Plant: entrance gate at Colt Street.

A complete description of evacuation routes is presented below. Building maps, designating the building exits described below as possible evacuation routes are provided on Figure 3.

A) CONCENTRATED WASTE TREATMENT PLANT - Main Building (CWPT-1)

1) Pedestrian exit doors:

a) South side, ground level (level between basement and first floor). Exit under treatment platform to outside door on south side or into Main Building to outside on east side.

b) East side, first floor exits to treatment plant yard.

c) South side, platform level (level between first and second floor). Exits across treatment platform and down stairs to south side outside door or into Main Building and to outside door on east side.

2) Other exits:

a) West side, ground level - folding exit doors to treatment plant yard.

b) East side, first floor, transporter repair area - overhead exit door to treatment plant yard.

B) CONCENTRATED WASTE TREATMENT PLANT - Waste Storage Building (CWTP-2)

1) Pedestrian door exits:

a) North side, first floor exit to treatment plant yard.

b) West side, first floor exit to treatment plant yard.

2) Other Exits:

a) West side, first floor overhead door exits to treatment plant yard.

C) CONCENTRATED WASTE TREATMENT PLANT - Storage Building A (CWTP-5)

1) Pedestrian door exits:

a) West side of building, exit to treatment plant yard.

b) South side of building.

2) Overhead door exits:

a) Four on west side of building, exit to treatment plant yard.

D) CONCENTRATED WASTE TREATMENT PLANT - STORAGE BUILDING B (CWTP-6)

1) Pedestrian door exits:

a) North side of building, exit to treatment plant yard.

2) Overhead door exits:

a) Three on north side of building, exit to treatment plant yard.

E) CONCENTRATED WASTE TREATMENT PLANT - Planned Centralized Waste Storage and Transfer Facility

1) Pedestrian door exits

a) All four sides, exit to yard or Willow Street

2) Overhead door exits

a) South side of building, exit to Willow Street

b) North side of building, exit to yard

F) CONCENTRATED WASTE TREATMENT PLANT - Yard Area

1) Fence exits are located on the east, west, and south sides of the yard, exit to maintenance building area, Willowbrook Road, and Willow Street, respectively.

G) PRE-TREATMENT PLANT

1) Pedestrian door exits:

a) South side.

b) East side.

2) Other Exits:

a) East side, overhead doors.

H) COLT STREET TREATMENT PLANT

1) Pedestrian door exits:

a) South side of control building, upper level, exit via road to gate at Colt Street.

b) South side of control building, truck loading area, lower level, exit via road to gate at Colt Street.

c) North side of control building, upper level, exit onto rapid mix tank and use stairs at southwest corner, sidewalk and road to gate at Colt Street (NOTE: Use this route to exit from lower level pump room.

d) West side of control building from oil pump room, lower level, exit via road to gate at Colt Street.

e) South side of thickener gallery, exit via stairs, walk and road to gate at Colt Street.

2) Overhead door exits:

a) Three doors on west side of control building, truck loading area, lower level, exit via road to gate at Colt Street.

b) One door on south of control building, loading dock, upper level, exit via road to gate at Colt Street (NOTE: This exit has a four foot drop to grade and is to be used only if the personnel door is not usable).

3) Tanks and grounds:

a) Rapid mix tank and oil separator walkways, use stairs at southwest corner, sidewalk and road to gate at Colt Street.

b) Thickener tank walkways, use stairs on south side, sidewalk and road to gate at Colt Street.

c) Clarifiers and neutralization tank walkways, use stairs on west side and road to gate at Colt Street.

d) Other points on this site, use most direct safe route to gate at Colt Street.

US EPA New England
RCRA Document Management System
Image Target Sheet

RDMS Document ID # 2407

Facility Name: PRATT & WHITNEY - MAIN STREET

Facility ID#: CTD990672081

Phase Classification: R-1B

Purpose of Target Sheet:

[X] Oversized (in Site File) [ ] Oversized (in Map Drawer)

[ ] Page(s) Missing (Please Specify Below)

[ ] Privileged [ ] Other (Provide Purpose Below)

Description of Oversized Material, if applicable:

FIGURE 3: EVACUATION ROUTES

[X] Map [ ] Photograph [ ] Other (Specify Below)

* Please Contact the EPA New England RCRA Records Center to View This Document *

APPENDIX D

TYPICAL EMERGENCY EQUIPMENT INVENTORY

1. Concentrated Waste Treatment Plant - Main Building (CWTP-1)

A) SPILL CONTROL EQUIPMENT

1) Shovels and brooms
2) Barrels, transporters, and pumps
3) Soda ash, absorbent material, and oil spill control booms

B) COMMUNICATION EQUIPMENT

1) Telephones - two (2) in office and one (1) just inside the Main Building door on the east side.
2) PA System

C) FIRE EXTINGUISHING EQUIPMENT

1) 15 lb. carbon dioxide, first floor
2) 2.5 gal. water, first floor
3) 6 lb. ABC, second floor

D) PERSONNEL SAFETY EQUIPMENT "In Lockers"

1) Full protective clothing, face shields, boots, aprons, gloves
2) Respirators
3) Scott Air Paks - two (2) on first floor; 30-minute duration
4) Emergency shower

a) Platform
b) Outside office door
c) Basement
d) Laboratory

5) Eye Wash Station

a) Inside east door
b) Basement
c) Laboratory

2. Concentrated Waste Treatment Plant - Barrel Storage Building (CWTP-2)

A) SPILL CONTROL EQUIPMENT

1) Shovels and brooms
2) Barrels
3) Sawdust and absorbent material

B) COMMUNICATION EQUIPMENT

1) Telephone
2) PA System Speaker

C) FIRE EXTINGUISHING EQUIPMENT

1) 30 lb. ABC, inside
2) 6 lb. ABC, outside

D) PERSONNEL SAFETY EQUIPMENT

1) Full protective clothing, face shield, boots, aprons, gloves
2) Shower - northeast corner
3) Eye wash station - northeast corner

3. Concentrated Waste Treatment Plant - Transporter Storage Pad (CWTP-4)

A) SPILL CONTROL EQUIPMENT

1) Shovels and brooms
2) Sawdust and absorbent material

B) FIRE EXTINGUISHING EQUIPMENT

1) 6 lb. ABC, outside

D) PERSONNEL SAFETY EQUIPMENT

1) Obtain PPE from trailer or CWTP-1

4. Concentrated Waste Treatment Plant - Storage Building A (CWTP-5)

A) SPILL CONTROL EQUIPMENT

1) Shovels and brooms
2) Barrels
3) Sawdust and absorbent material

B) COMMUNICATION EQUIPMENT

1) Telephone
2) PA System Speaker

C) FIRE EXTINGUISHING EQUIPMENT

1) 30 lb. ABC, outside
2) 6 lb. ABC, inside

D) PERSONNEL SAFETY EQUIPMENT

1) Full protective clothing, face shields, boots, aprons, gloves
2) Eye wash station - inside on south wall
3) Emergency Shower

5. Concentrated Waste Treatment Plant - Storage & Building B (CWTP-6)

A) SPILL CONTROL EQUIPMENT

1) Shovels and brooms
2) Barrels
3) Sawdust and absorbent material

B) COMMUNICATION EQUIPMENT

1) Telephone
2) PA System Speaker

C) FIRE EXTINGUISHING EQUIPMENT

1) 30 lb. ABC, outside
2) 6 lb. ABC, inside

D) PERSONNEL SAFETY EQUIPMENT

1) Full protective clothing, face shields, boots, aprons, gloves
2) Eye wash station - inside on south wall
3) Emergency Shower

6. Concentrated Waste Treatment Plant - Planned Centralized Waste Storage and Transfer Facility

A) SPILL CONTROL EQUIPMENT

1) Shovels and brooms
2) Barrels
3) Sawdust and absorbent material

B) COMMUNICATION EQUIPMENT

1) Telephones
2) PA system

C) FIRE EXTINGUISHING EQUIPMENT

1) Automatic sprinkler system
2) Automatic foam system
3) 30 lb. ABC's, outside
4) 6 lb. ABC's, inside

D) PERSONNEL SAFETY EQUIPMENT

1) Full protective clothing, face shields, boots, aprons, gloves
2) Respirators
3) Scott air paks
4) Emergency showers and eye wash stations

Treatment Plant

A) SPILL CONTROL EQUIPMENT

1) Shovels and Brooms
2) Barrels
3) Pump, hose, absorbent material

B) COMMUNICATION EQUIPMENT

1) Telephone

C) FIRE EXTINGUISHING EQUIPMENT

1) Sprinkler System
2) 15 lb. carbon dioxide extinguisher

D) PERSONNEL SAFETY EQUIPMENT

1) Face shield, boots, aprons, gloves
2) Shower and eye wash stations

a) Next to sink on south side
b) East Wall
c) Near barrel pump in storage room

8. Colt Street Treatment Plant

A) SPILL CONTROL EQUIPMENT

1) Shovels buckets and brooms
2) Pump, hose, and wet-vac
3) Sodium bicarbonate
4) Oil absorbent material
5) Decontamination Equipment

B) COMMUNICATION EQUIPMENT

1) Telephone

C) FIRE EXTINGUISHING EQUIPMENT

1) Fire hydrant and hoses
2) Carbon dioxide extinguisher
3) Dry chemical extinguisher
4) 2-1/2 gallon water extinguishers

D) PERSONNEL SAFETY EQUIPMENT

1) Protective Clothing - Face shield, goggles, boots, gloves
2) Shower and eye wash station
   a) Main Level - outside office
   b) Lower Level
3) Scott Air Paks

9. E.H. Mobile Van - Rescue 15

Quantity	Content
1	D.O.T. Guide Book
1	Emergency Location Book
1	Aircraft Rescue Book
1	Grid Maps (Set)
1	Kit (Emerg. Rescue See Page #4)
1	Light (Hand)
1	Protector (Ear)
1	Pair Crash Gloves
3	Lights (Flood)
2	Nomex Crash Gear
1	Bag of Saw Dust
2	Fiber Board Drums
1	Spool, Yellow Electric Cord
1	Light (Carpenter)

E.H. Mobile Van - Rescue 15 (Cont'd)

Quantity	Content
1	Hand Light
2	Scott Air Pak 4.5
2	Scott Cylinders (Spare 2.2)
1	Water Vac, @ Wand
1	Pump (Submersible)
1	Rope (50' 1/2")
1	Rope (200' 1/2")
1	Rope (80' 3/4")
1	Rope (50' 3/4")
1	Rope (100' 3/4")
1	Shovel Long Handle
1	Command Post Flag
1	Ext. Cord, Grey for Water Vac
4	125 ft. Extension Cords
1	15 ft. Line cord Feed for R-14
1	Generator (4500 W. Honda EX4500S)
2	Lights (Emergency Flood)
1	RS-10 Extrication Tool Kit
1	Bag of Saw Dust
1	Partner K-1200 Rescue Saw]
1	NIOSH Haz-Mat Hand Book

2	Goggles (Safety)
1	Haz/Mat Box, Plugs Wood & Rubber
1	Salvage Cover
2	Rescue Belts
5	Pair Rubber Gloves
1	Plastic Tarp
1	Barrel Wrench
1	Bolt Cutter (#1)
1	Bolt Cutter (#3)
1	Bolt Cutter (#5)
1	Come Along
1	Come Along Handle (spare)
3	Steel Cables
1	Junction Box (Electrical)
1	Tool Box (See This Page)

TOOL BOX

2	Blades (Hacksaw)
2	Chisel (Cold)
1	Cutter (Sheet Metal)
1	Hacksaw
1	Suction Tile Puller
1	Hook (Bale)
1	Knife (Linoleum)
1	Pipe Cutter (Small)]
1	Plier (Vise Grip)
1	Channel Lock Plier
1	Screwdriver (6")
1	Screwdriver (Phillips #1)
1	Screwdriver (Phillips #2)
1	Terminal Puller
1	Wrench (1/2 x 9/16)
1	Key Hole Saw with 3 Blades
1	Acetylene Wrench
1	Spark Plug Wrench
1	Center Punch (Spring Loaded)
2	12' Chains with Hook and Eyes

RESCUE TOOL KIT

1	Chisel (Cold)
1	Cutter (Sheet Metal)
1	Cutter (Wire)
2	Hack Saw Blades
1	Hacksaw
1	Hammer (2#)
1	Mallet
1	Plier (Channel Lock)
1	Plier (Standard)
1	Plier (Water Pump)
1	Screwdriver (6")
1	Sling (Rope with Hook)
	Plugs Assorted

Quantity	Content
1	Handlight
1	Emergency Locator Book (Glove Compartment)
1	Set of Binoculars (Glove Compartment)
2	Remco Hazmat Shovels
1	Broom
1	Hazardous Material Kit (RED)
1	600 ft. 3/8 in. Poly Rope on Reel
1	3 ft. Iron Pipe, Rope Reel Handle
1	5 Gallon Pail of Soda Ash
1	5 Gallon Pail of Saw Dust
2	Dust Pans
2	Hand Brooms
2	Air Packs (One Hour, on Front Wall)
4	Stantions
1	Length of Poly Rope (Yellow)
1	Honda EX-3500 Portable Gen
1	125 ft. Cord
1	Line Cord to Power R-14
1	Roll, Plastic in Box
1	C. Post Flag (Orange)
2	Cardboard Drums
4	Bags of Saw Dust
1	5 Gallon Yellow Emergency Response Pac
1	Chlorine B Kit
2	Spare Hour Air Bottles in Racks
1	Absorbent Pad (Roll)
2	Pair Pioneer Neoprene Gloves
2	Sarnex Disposable Suits
1	Green P.V.C. Vinyl Suit

YELLOW HAZMAT TOOL BOX

7	White Suits
3	Yellow Suits
3	Pair Rubber Gloves (Lt. Green)
4	Pair Dark Green Rubberized Gloves
3	Pair Latex Gloves
2	Rolls Barrier Tape
1	Roll Duct Tape
1	Roll Red Masking Tape
2	Containers of Litmus Paper
1	Shoe Me Megaphone
2	Pair Knee Boots
	Pigs
1	Roll Masking Tape
1	Roll of Duct Tape
1	Box Disposable Gloves
	Yellow Disposable Suits
1	Incident Data Sheet Clip Board
1	Incident Command Board

1	Face Shield
	Plastic Trash Bags
4	Hazmat Radio Sets Clark H-7140
3	Chris Manuals
1	Hazardous Chem Data Book
1	Safety Officers Helmet
1	Fire Protection Guide on Haz-Mat
4	Trell Chem Suits
4	Motorola Hand Portable Radios
1	NIOSH Haz-Mat Hand Book
1	Incident Commander Vest
1	Safety Officers Vest
2	P&W Environmental Officers Vests

DECON MATERIAL IN TRUCKWELL

1	Portable Decon Shower
3	Portable Decon Pools
3	32 Gallon Decon Barrels
5	Containment Pigs
4	Lengths of 3/4 in. Garden Hose
1	Hose Manifold (3/4 in. to 1 1/2 in.)
1	Roll of Plastic 4 ft. Wide
1	30 x 50 ft. Decon Plastic Tarp
1	Wooden Handle Decon Brush
1	Roll of Barrier Tape

APPENDIX E

Emergency Equipment Locations

US EPA New England
RCRA Document Management System
Image Target Sheet

RDMS Document ID # 2407

Facility Name: PRATT & WHITNEY - MAIN STREET

Facility ID#: CTD990672081

Phase Classification: R-1B

Purpose of Target Sheet:

[X] Oversized (in Site File) [ ] Oversized (in Map Drawer)

[ ] Page(s) Missing (Please Specify Below)

[ ] Privileged [ ] Other (Provide Purpose Below)

Description of Oversized Material, if applicable:

FIGURE 4: SPILL CONTROL AND EMERGENCY RESPONSE EQUIPMENT

[X] Map [ ] Photograph [ ] Other (Specify Below)

* Please Contact the EPA New England RCRA Records Center to View This Document *

SECTION H - CLOSURE PLAN AND FINANCIAL REQUIREMENTS

A. INTRODUCTION

The present Closure Plan is provided in accordance with the RCRA regulations for the Centralized Waste Storage and Transfer Facility (CWS&TF).

The CWS&TF is presently being constructed to replace the existing container and tank storage areas at the Concentrated Waste Treatment Plant.

The units that P&W is in the process of replacing include four container storage areas (CWTP-1, CWTP-2, CWTP-4, and CWTP-6) and two tank storage areas (CWTP-2, CWTP-3) and are scheduled to be closed once the CWS&TF has been constructed and is fully operational (estimate is 1993). Storage Building CWTP-5 has never been used for storage of hazardous waste and therefore would not undergo closure. After closure has been completed, some of these areas may be used for storage of hazardous waste generated on-site for less than 90 days.

Two other areas that are in the process of being closed include the Burn-Zol hazardous waste incinerator and the wax/solvent storage tank. P&W has an approved partial Closure Plan for the Burn-Zol hazardous waste incinerator, and is presently in the process of implementing closure of this area. Furthermore, on December 11, 1990 P&W submitted a notification of partial closure to EPA, Region I and to the CTDEP, to implement closure of the wax/solvent storage tank located in the same building as the former incinerator, in the CWTP area.

The approved partial closure plan for the Burn-Zol hazardous waste incinerator is included in Appendix H-1, and the interim report on closure of this area is included in Appendix H-2. The partial closure plan for the wax/solvent storage tank is provided in Appendix H-3 while the closure plan

for the remaining four container storage areas and two tank storage areas is given in Appendix H-4.

Closure will be performed in a manner that:

1. Minimizes the need for further maintenance, and;
2. Controls, minimizes or eliminates to the extent necessary, post closure release of hazardous wastes to groundwater, surface water or the atmosphere.

A copy of the closure plan will be maintained on-site at the East Hartford facility until the certification of final closure has been submitted to and accepted by the U.S. Environmental Protection Agency (EPA) Region I and the Connecticut Department of Environmental Protection (CTDEP). P&W will notify the EPA Regional Administrator and CTDEP Commissioner at least 45 days prior to the date of final closure is expected to begin. Upon completion of closure, P&W will submit a certification by both P&W and an independent registered professional engineer to the Regional Administrator and the CTDEP Commissioner that the facility has been closed in accordance with the specifications in the approved closure plan. This site-closure certification will include Appendix IX test results, all other pertinent analytical data plus the final confirmation sampling results. Included also will be:

- Photographic records of the closure documenting each construction step of the closure process
- Contractors daily log
- A list of any departure from the approved plan with rationales in accordance with 40 CFR 264.112(c).

In subsequent sections, this Closure Plan provides a description of general methods to be applied and precautions to be taken in closing the Centralized Waste Storage and Transfer Facility. Table H-1 lists the maximum waste inventory, options for ultimate or partial closure and a schedule for ultimate closure of the units. Although partial closure of the CWS&TF is not forseeable at the moment, due to the size of the CWS&TF, it is possible that certain areas may undergo partial closure. A summary of specific closure methods applicable to the Centralized Waste Storage and Transfer Facility are described in detail in the following sections.

The term "area" is used herein to signify each one of the container storage areas, tank storage areas, transporter unloading stations, truck pads, fork lift pads, or staging areas being individually gridded and sampled as outlined in Figure H-1. The term "unit" on the other hand, applies to the Centralized Waste Storage and Transfer Facility and to each individual building (CWTP-1 through CWTP-6) within the Concentrated Waste Treatment Plant. For example, the unit CWTP-2 (Barrel Building) is comprised of two areas, the container storage area and the tank storage area.

B. CLOSURE REQUIREMENTS

a. General

This section provides a description of general methods to be applied and precautions to be taken in closing the container and tank storage areas at the Centralized Waste Storage and Transfer Facility. Table H-1 lists the process codes, maximum waste inventory, and a schedule for ultimate closure of the container and tank storage areas at the CWS&TF.

In order to determine the effectiveness of the closure activities, surface samples will be analyzed both before and after decontamination. A list of hazardous constituent parameters to be used in establishing the closure performance standards will be developed for each storage area. These clean standard parameter (CSP) lists will consist of all the 40 CFR 264, Appendix IX parameters (Appendix IX) detected during pre-decontamination sampling, and possibly certain 40 CFR 261 Appendix VIII parameters (Appendix VIII) which are not included in Appendix IX. The Appendix VIII parameters will be selected based on the potential for their presence in any given storage area. The inclusion of specific Appendix VIII parameters will be based on a review of all site specific records including:

- Storage Records
- Waste Product Records
- Material Safety Data Sheets
- Process Information
- Waste Characterization Information
- Monitoring Parameters from NPDES-permitted Discharge

Prior to decontaminating storage area surfaces, the surfaces will be sampled and analyzed for all Appendix IX constituents in the area of highest suspected contamination. After decontamination, samples of each storage area surface will be analyzed for each of the parameters on the CSP in order to demonstrate that the cleanup criteria have been met. A clean standard for each identified parameter on the CSP list will be developed for all exposure pathways. The pathways to be addressed are:

- Direct Ingestion
  - -Total Mass Analysis
  - -Leachate for ground water pathways
- Dermal Contact
- Inhalation Pathway

Health/risk based target standards will be established for each parameter identified and each of the above exposure pathways. The clean standards to be used, specified in the Interim Final RCRA Facility Investigation (RFI) Guidance, EPA 530/SW-89-031, May 1989 are:

- Maximum contaminant levels (MCLs)
- Risk-specific doses (RSD)
- Reference doses (RFD)
- State of Connecticut Action Levels (CTAL).

TABLE II-1

CLOSURE PLAN SUMMARY
CWTF
EAST HARTFORD, CONNECTICUT

Unit	Areas	Process Code	Maximum Inventory	Schedule For Ultimate Closure Start*/Complete	Year
Centralized Waste Storage and Transfer Facility	Container Storage Areas	S01	59,400 gals.	April, September	2041
	Tank Storage Areas	S02	96,000 gals.	April, September	2041

* - Assumed start date. Completion date based on estimated time of performance of closure.

Later versions of this document may be used if available at the time of closure. The only exceptions to this hierarchy will be if a waste constituent has an RFD lower than its RSD, or if a CTAL is lower that the EPA values. In this case the more stringent values will be used.

In order to establish the clean-up criteria for soil and air, the following performance standards will be used.

If EPA or State of Connecticut recommended exposure limits do not exist for a constituent at the time of closure, the standard will be background levels. If background values are used, they will be statistically verified. Any background values that are shown to be in excess of the health/risk based standards will not be used unless it is demonstrated that the residual constituents are truly indicative of background concentrations and not the result of waste contamination.

Concrete and floor coating samples will be collected and analyzed from the Centralized Waste Storage and Transfer Facility during the construction process. This data is being collected to establish base line contaminant levels in these materials prior to any use of the building. Alternatively, background concrete samples may be collected from areas unaffected by waste storage or handling operations at the time of closure.

Once the CSP list is developed, specific sample handling and analytical methods will conform to those specified in "Test Methods for Evaluating Solid Waste, Physical/Chemical Methods," EPA Publication SW-846, most recent edition.

b. General Closure Requirements

1. Health and Safety - A Health and Safety (H&S) Plan will be prepared in conformance with the requirements found in 29 CFR Parts 1910 and 1926, the NIOSH/OSHA/USCG/EPA Guidance Manual for Hazardous Waste Site Activities (NIOSH No. 85-115), and US EPA "Standard Operating Safety Guides".

The Health and Safety Plan will address all hazardous waste activities associated with closure of the CWS&TF. More specifically, the plan will:

- provide a description of the site,
- identify key personnel,
- assign responsibilities to H&S personnel,
- provide an analysis and evaluation of the hazards associated with each activity,
- specify initial levels of protection required and action levels for additional protection,
- establish training requirements for participating personnel,

- include provisions for medical surveillance,
- describe air monitoring procedures and requirements
- outline work zones (exclusion, contamination and decontamination zone), and
- describe decontamination procedures for personnel, small equipment and heavy equipment and machinery

The three work zones are described in more detail below:

(i) Exclusion Zone:

The Exclusion Zone will isolate the area of contaminant generation and restrict (to the extent possible) the spread of contamination from active areas of the site to support areas and off-site locations. This area will encompass all intrusive work and it will be demarcated by the Hot Line (e.g. - a tape, rope line or physical barrier).

(ii) Contamination Reduction Zone:

The Contamination Reduction Zone (CRZ) will start at the Hot Line and extend to the Contamination Control Line. When contaminated personnel, equipment, or materials cross the Hot Line, they are assumed to be contaminated from site operations. Being subjected to the decontamination process, they become less contaminated; when they reach the Contamination Control Line, they are considered clean and can exit this zone without spreading contamination.

Within the Contamination Reduction Zone is the Contamination Reduction Corridor (CRC), where materials necessary for personnel and equipment decontamination are kept. A separate area shall be established for heavy equipment decontamination. In addition, certain safety equipment (e.g. - emergency eye wash, fire extinguisher, and first aid kit) are staged in this zone.

(iii) Support Zone:

The Support Zone is the outermost zone of the site, separated from the Contamination Reduction Zone by the Contamination Control Line; it is considered a clean area.

The Support Zone contains the necessary storage of equipment, stockpiling of material, and support facilities (including personal hygiene facilities) for site operations.

The decontamination crew will consist of a minimum of two individuals who will be adequately clothed, including self-contained breathing apparatus, if required, and coveralls. Supervision of the decontamination process will include an individual(s) responsible for operation of the Treatment, Storage, Disposal Facility (TSDF).

The primary basis for the level of personal protection selected is determined by:

- The type, toxicity, measured concentration, and permissible exposure limits of the chemical substance.
- The potential or measured exposure to substances in the air, splashes of liquid, or other direct contact with materials due to the work being performed.

The personal protective equipment used to protect the body against chemical hazards is divided into four categories according to the degree of protection:

Level A - Will be worn when the highest level of respiratory, skin, and eye protection is needed.

Level B - Will be worn when the highest level of respiratory protection is needed, but a lesser level of skin protection is needed.

Level C - Will be worn when the types of airborne substances are known, the concentrations have been measured, and the criteria for using air-purifying respirators are met.

Level D - This level is used where no respiratory or skin hazards are present. Level D protection is primarily a work uniform providing minimal protection.

It is not anticipated that personnel will need to use Levels A or B although this determination will be made after the complete CSP list is developed and specific hazardous constituents are known.

2. Sudden or Non-Sudden Release or Fire Hazard - The decontamination process will be considered as an activity presenting a high risk potential for release of hazardous waste or fire/explosion hazard. As such, the appropriate mechanisms of the Contingency Plan will be ready for activation.

3. Scheduling

Completion of closure of the facility will be within 180 days of CTDEP approval of the closure plan or from the last receipt of hazardous waste; whichever occurs later. The schedule for closure including milestone dates is as follows:

DAY	ACTIVITY
-45	Written notification of anticipated closure.
0	CTDEP approved closure plan or last receipt of hazardous wastes (if that is later).
90	All hazardous wastes disposed of off-site at permitted facilities.
100	Inspection for residual wastes complete and all damaged areas identified. Samples collected from damaged areas and analyzed appropriately.
120	Floors cleaned and rinsed. Confirmatory chip samples taken of the concrete containments and soils.
150	Floor repaired as necessary for further use.
180	Completion of closure and certification submittal to the CTDEP Commissioner.

All final closure activities will be supervised and certified by an independent Connecticut registered professional engineer, in addition to P&W personnel.

P&W may request an extension of closure time depending on the season that closure begins.

4. Partial Closure - Due to the fact that P&W has only one regulated unit consisting of two regulated activities partial closure for this facility is not an option. When the facility commences closure it will be a full closure for the entire regulated unit.

5. Certification - The following certification shall be submitted to the Commissioner of CTDEP upon completion of closure:

"I, _____, for Pratt and Whitney, United Technologies
(Name)
Corporation, owner and operator of _____, a
(Site)
hazardous waste storage area and I, _____, P.E.,
(Name)

employed by _____, certify by means of our
(Firm)
signatures, that the facility named above has been closed in accordance with the method specified by the Closure Plan, and attached hereto. Closure was completed on _____, after receiving the final volume of
(Date)
material on _____".
(Date)

_____	_____
Company Signature	Engineer
_____	_____
Date	Date

Along with the Closure certification, a list of departures from the plan, a photographic record, sampling results, manifests, and any other pertinent documents verifying closure will be provided to the CTDEP.

c. Amending the Closure Plan

P&W will amend the closure plan whenever changes in operating plans or facility design affect the closure plan, or whenever there is a change in the expected year of closure. If a request for permit modification is made to authorize a change in operating procedures or facility design, P&W will also request a modification to the Closure Plan at the same time. If a permit modification is made requiring a change in operating procedures or facility design, P&W will make a request for modification of the Closure Plan within 60 days after the change in plans or design occurs.

d. Closure of Container Storage Areas

This closure plan describes the procedures to be followed during closure of the container storage areas at the Centralized Waste Storage and Transfer Facility (CWS&TF).

For these areas it is anticipated that the inventory of hazardous waste remaining at closure at the CWS&TF will not exceed the maximum inventory values listed in Table H-1 or the quantities listed in the Part A Permit Application.

The procedures for closure of the container storage areas are as follows:

1. The container storage area will be inspected for cracks or other visible signs of deterioration. If cracks or deteriorated areas are observed during the integrity assessment of the container storage areas then the sampling plan discussed below will be modified to include a representative portion of these areas. If sampling of cracks, gaps or damaged or deteriorated areas in the concrete indicate that hazardous constituents may have migrated below the slab, then additional decontamination and/or partial removal of the contaminated surface will be performed. Additional confirmatory sampling will be performed in these areas. In the unlikely situation that the subgrade underneath the slab is found to be contaminated, then the Closure Plan would be modified to include specific clean-up measures for these areas, and will be submitted to CTDEP for approval. For container storage areas, one sample will be collected from the bottom of each sump. If no cracks, or visible signs of deterioration are found, then non-statistical "judgement sampling" of potentially contaminated areas, based on visual observations, is not possible.

2. In addition, two composite concrete chip samples will be collected from the containment base of each container storage area. Each composite will be made up of several discrete samples collected from discolored, soft or otherwise damaged areas to represent worst case conditions. Each composite sample will then be analyzed for Appendix IX constituents. Analysis for the organic constituents of the Appendix IX will be performed on a grab sample, which will be selected from discrete samples based on field screening with a portable volatile organic compound analyzer

3. Dispose of all remaining hazardous waste off-site via licensed vendors for disposal at permitted TSDF's.

4. Evaluate the results of Appendix IX analyses and various site-specific records (as identified above under Section B.a) to establish the clean standard parameter (CSP) list and identify corresponding health/risk based target standards.

5. If health/risk based standards do not exist for a specific parameter at the time of closure, a minimum of four background concrete chip samples will be collected and analyzed for the CSP list. This data will be used for comparison in the absence of health/risk based standards.

6. A Health and Safety Plan, specific to the site being closed and the CSP list, will be prepared to cover the closure activities to be performed. Details on the Health and Safety Plan were provided earlier.

TABLE H-2
CLEANER SOLUTION FORMULATIONS

DECON SOLUTION A - A solution containing 5 percent sodium carbonate (Na_2CO_3 and 5 percent trisodium phosphate (Na_3PO_4).

To 10 gallons of water, add 4 pounds of sodium carbonate (soda ash) and 4 pounds of trisodium phosphate. Stir until evenly mixed.

DECON SOLUTION B - A solution containing 10 percent calcium hypochlorite ($Ca(ClO)_2$).

To 10 gallons of water, add 8 pounds of calcium hypochlorite. Stir with a wooden or plastic stirrer until evenly mixed.

DECON SOLUTION C - A solution containing 5 percent trisodium phosphate. This solution can also be used as a general purpose rinse.

To 10 gallons of water, add 4 pounds of trisodium phosphate. Stir until evenly mixed.

DECON SOLUTION D - A dilute solution of hydrochloric acid (HCl)

To 10 gallons of water, add 1 pint of concentrated hydrochloric acid. Stir with a wooden or plastic stirrer.

TYPE OF HAZARDOUS WASTE	PREFERRED DECONTAMINATION SOLUTION
Inorganic acids, metal processing wastes	A
Heavy metals, i.e., mercury, lead, cadmium	A
Pesticides, fungicides, chlorinated phenols, dioxins	B
Cyanides, ammonia, and other non-acidic inorganic wastes	B
Solvents and organic compounds, such as trichloroethylene, chloroform, and toluene	C, A
PBBs and PCBs	C, A
Oily, greasy, unspecified wastes	C
Inorganic bases, alkali, and caustic waste	D

7. The containment areas will then be scrubbed with the appropriate decontamination solution depending on the type(s) of hazardous waste stored in the area, and thoroughly rinsed with water. The plant tap water will also be analyzed for the CSP list parameters. A summary of recommended decontamination solutions for various type of hazardous waste along with the formulations of the decontamination solutions is provided in Table H-2.

   As an example, a bay used in the past for storage of various types of solvents and other organic compounds in containers, and at times used for storage of alkalies, will have to be decontaminated sequentially with a combination of solutions listed in Table H-2. First, the containment area will be scrubbed with a solution containing 5 percent sodium carbonate and 5 percent trisodium phosphate and then it will be triple rinsed with water. After this procedure has been completed, the container storage area will be scrubbed with a dilute solution of hydrochloric acid (1 pint concentrated hydrochloric acid to 10 gallons water) and again triple rinsed with water.

   Spent decontamination solutions and rinsewaters will be collected in the existing floor sumps or will be contained through the use of dikes to prevent wash water from migrating into clean areas. This rinseate will be collected using a wet/dry vacuum then collected and disposed of as hazardous waste via licensed transporters to permitted disposal facilities. Similarly, all sweepings, residues or other debris will be disposed of as hazardous waste.

8. All equipment used in closure activities will either be decontaminated or collected and disposed of as hazardous waste. An equipment decontamination zone will be located within the Contamination Reduction Zone (refer to the Health and Safety Plan) and it will include a high pressure wash area for equipment and vehicles. Respirators, if used, will be decontaminated daily by setting the cartridge aside, disassembling the masks, placing all parts in a cleaning solution and rinsing them with tap water. Old cartridges will be collected for disposal off-site as hazardous waste. Small manual tools and equipment used during decontamination, such as brushes, gloves, disposable suits, etc., will be collected in a 55-gallon drum and disposed of as hazardous waste using licensed transporters and permitted disposal facilities. Portions of larger tools (i.e. - lifts, hoists, etc.) which have come in contact with the waste will be decontaminated by steam cleaning. Particular attention will be paid to tires, under surfaces, points of contact with the ground and horizontal surfaces where dusts or aerosols may have settled. All rinseate generated during decontamination activities will be collected and disposed of as hazardous waste via permitted TSDFs, unless verified to be non-hazardous via analytical testing. Additional details on the decontamination procedures will be provided in the Health and Safety Plan.

9. Verification sampling will be performed according to the following procedure. Each of the areas, after decontamination, will be gridded and sampled at locations corresponding to randomly selected grid nodes. The size of the grid interval is determined by this generally accepted mathematical formula:

$$GI = (A / 3.14)^{0.5} / 2, \text{ where:}$$

GI = grid interval, ft
A = area to be gridded, sq. ft.

The calculated value for the grid interval is then rounded off to the nearest integer and the container storage area is gridded.

One sample will be collected from each 100 sf area within the containment. (A minimum of three test samples will be collected from each containment area). Table H-3 outlines the number of verification samples required to be collected from each of the container storage areas to generate statistically viable data according to the procedure outlined above. The number of grid samples is the number of sample required. A random number table procedure was used to calculate the exact location of these samples, which are shown in Figure H-1 for the container storage areas at the Centralized Waste Storage and Transfer Facility. In addition to these samples, each containment sump will be sampled, raising the number of samples to be collected to the value shown in the last column of Table H-3. The locations of the containment sumps are also shown in Figure H-1.

All samples will consist of discrete concrete chip samples collected with a chisel or concrete hammer drill. The portion of the tool in direct contact with the concrete will be cleaned between samples using an industrial non-phosphate detergent wash and a tap water rinse.

The resulting concrete chips will be transferred directly into laboratory supplied glassware. The field QA/QC program for concrete chip samples will include one duplicate for every 10 samples and one trip blank to accompany the samples to the laboratory. Immediately following sample collection, each sample will be labelled and placed in an iced cooler. The samples will be transported under full chain-of-custody to a State of Connecticut approved laboratory. The analytical testing and determination procedures are presented in Section C of this Closure Plan.

10. If based on an evaluation of the analytical data (comparison to available health/risk based levels or background) the decontamination efforts are deemed incomplete, the decontamination will be repeated until follow-up sampling demonstrates that parameters are at, or below health/risk standards or are consistent with background levels. Any

TABLE H-3
CONTAINER STORAGE AREAS
VERIFICATION SAMPLING

Item	Process	Area (Sq. Ft.)	Grid Interval(Ft)	No. of Grid Nodes	No. of Grid Samples	No. of Sump Samples	Total No. of Samples
Centralized Waste Storage and Transfer Facility:							
a)	Truck Pad (Typ. of 4)	1,814	12	24	18	1	19
b)	Fork Lift Ramp	853	8	33	8	2	10
c)	Transporter Unloading Station (Typ. of 4)	71	2	28	3	1	4
d)	Container/Transporter Storage Area (Type A, Typ. of 5)	190	4	28	3	1	4
e)	Container/Transporter Storage Area (Type B, Typ. of 5)	153	3	24	3	1	4
f)	Container/Transporter Storage Area (Type C, Typ. of 6)	264	5	20	3	1	4
g)	Container/Transporter Storage Area (Type D)	225	4	21	3	1	4
h)	Container/Transporter Storage Area (Type E, Typ. of 3)	388	5	24	4	1	5
i)	Staging Area (Type A)	4,960	8	144	50	4	54

TABLE H-3 (Cont'd)
CONTAINER STORAGE AREAS
VERIFICATION SAMPLING

Item	Process	Area (Sq. Ft.)	Grid Interval (Ft)	No. of Grid Nodes	No. of Grid Samples	No. of Sump Samples	Total No. of Samples
j)	Staging Area (Type B)	6,880	8	164	69	8	77
k)	Acid Scrubber	120	3	20	3	1	4
l)	General Container	285	5	20	3	1	4

NOTE: The sump samples (judgement sampling) will be collected in addition to the statistically required grid samples. Other judgemental samples will be collected based on an integrity assessment of each of the areas being closed.

US EPA New England
RCRA Document Management System
Image Target Sheet

RDMS Document ID # 2407

Facility Name: PRATT & WHITNEY - MAIN STREET

Facility ID#: CTD990672081

Phase Classification: R-1B

Purpose of Target Sheet:

[X] Oversized (in Site File) [ ] Oversized (in Map Drawer)

[ ] Page(s) Missing (Please Specify Below)

[ ] Privileged [ ] Other (Provide Purpose Below)

Description of Oversized Material, if applicable:

FIGURE H-1: SAMPLING LOCATIONS

[X] Map [ ] Photograph [ ] Other (Specify Below)

* Please Contact the EPA New England RCRA Records Center to View This Document *

concrete chip sampling areas which exhibit levels consistent with background and either above or below health/risk levels will be considered representative of ambient background levels. Decontamination efforts will therefore be deemed complete, unless it is determined that background samples have been contaminated with the waste.

On the other hand, if repetitive decontamination efforts and subsequent sampling procedures fail to provide satisfactory data, then concrete coring will be performed to determine whether hazardous constituents have reached the subgrade, underneath the concrete slab. If this is the case, P&W will submit a modified Closure Plan to the CTDEP and EPA outlining additional specific procedures to be followed for closure of these areas.

11. Complete the certification of closure as presented in Section B(b)(5) of this Closure Plan. Within 60 days of completion of all closure activities, the Certification of Closure and closure documents will be sent by registered mail to the Commissioner of the Connecticut Department of Environmental Protection.

e. Closure of Tank Storage Areas

This section describes the procedures to be followed for closure of the tank storage areas in the Centralized Waste Storage and Transfer Facility. The facility will contain 16 aboveground tanks with individual secondary containment and several additional secondary containment areas for ancillary equipment and loading/unloading stations. The inventory of hazardous waste remaining at closure in the tank area of the Centralized Waste Storage and Transfer Facility will not exceed the maximum inventory value.

The procedures for closure of the tank storage area are as follows:

1. The tank storage area containments will be inspected for cracks or other visible signs of deterioration. If during the integrity assessment of each tank storage area cracks or deteriorated areas are observed, then the sampling plan presented below will be modified to include a representative portion of these areas. If sampling of cracks, gaps or damaged or deteriorated areas in the concrete indicate that hazardous constituents may have migrated below the slab, then additional decontamination and/or partial removal of the contaminated surface will be performed. Additional confirmatory sampling will be performed in these areas. In the unlikely situation that the subgrade underneath the slab is found to be contaminated, then the Closure Plan would be modified to include specific clean-up measures for these

areas, and will be submitted to CTDEP for approval. For tank storage containment, one sample will be collected from the bottom of each sump. If no cracks, or visible signs of deterioration are found, then non-statistical "judgement sampling" of potentially contaminated areas, based on visual observations, is not possible.

2. In addition, two composite concrete chip samples will be collected from the containment base of each container storage area. Each composite will be made up of several discrete samples collected from discolored, soft or otherwise damaged areas to represent worst case conditions. Each composite sample will then be analyzed for Appendix IX constituents.

3. Dispose of all remaining hazardous waste off-site via licensed vendors for disposal at permitted TSDF's. Any waste residues remaining in the tanks will be pumped out from the bottom of the tank. Residues remaining in pipings will be flushed out into the tank and also pumped out. A pressure washer will be used as needed to remove additional residues from the tank wall, bottom, and associated piping and controls. Caution will be used in entering a confined space, if an entry is required. Rinse solutions and personal protective gear will be compatible with the waste's compatibility grouping (Additional details will be provided in the Health and Safety Plan). Sludges accumulated at the bottom and/or walls of the tank will be scraped, and the scrapings will be collected and disposed of as hazardous waste via licensed vendors.

4. Evaluate the results of Appendix IX analyses and various site-specific records (as identified above under Section B.a) to establish the clean standard parameter (CSP) list and identify corresponding health/risk based target standards.

5. If health/risk based standards do not exist for a specific parameter at the time of closure, a minimum of four background concrete chip samples will be collected and analyzed for the CSP list.

6. A Health and Safety Plan, specific to the site being closed and the CSP list, will be prepared to cover the closure activities to be performed. Details on the Health and Safety Plan were provided earlier.

7. All aboveground piping will be removed and decontaminated or disposed of as hazardous waste. The tank itself and any tank components which have not been decontaminated will either be decontaminated, dismantled, and disposed of as non-hazardous waste as described above, or dismantled and disposed of as a hazardous waste without prior decontamination. The adequacy of the decontamination procedures used will be assessed by collecting wipe test samples. One sample will be

collected from each 100 sf area within the tank. (A minimum of three test samples will be collected from each tank). Each wipe sample will cover an area of approximately 3 sf for metal constituents and 6 sf per sample for non-metal constituents. If the results of the wipe testing indicate that the decontamination efforts were insufficient, then P&W may elect to dispose of these tanks as hazardous waste, or proceed to further decontamination and wipe testing. The cost estimate, presented in Section D of this Closure Plan, is based on the assumption that the tank components will be removed and disposed of off-site as a hazardous waste. This conservative assumption is intended to maximize the closure cost estimate.

Disassembly will be performed by manual dismantling and/or by the use of powered equipment. The option is available to use both hot or cold cutting techniques. The size of the stockpiled components will be directly influenced by the disposal facility's requirements for landfilling. It is anticipated that all piping will be cut into four foot sections and that larger components will not exceed 10 feet in any dimension.

8. After removal of the tank components, as described above, the floor of the concrete containment areas will then be scrubbed with the appropriate decontamination solution depending on the type(s) of hazardous waste stored in the area, and then thoroughly rinsed with water. The plant tap water will also be analyzed for the CSP list constituents. A summary of recommended decontamination solutions for various type of hazardous waste along with the formulations of the decontamination solutions has been provided in Table H-2.

   Spent decontamination solutions and rinsewaters will be collected in the existing floor sumps or will be contained through the use of dikes to prevent wash water from migrating into clean areas. This rinseate will be collected using a wet/dry vacuum then collected and disposed of as hazardous waste via licensed transporters to permitted disposal facilities.

9. All equipment used in closure activities will either be decontaminated or collected and disposed of as hazardous waste. An equipment decontamination zone will be located within the Contamination Reduction Zone (refer to the Health and Safety Plan) and it will include a high pressure wash area for equipment and vehicles, as needed. Respirators, if used, will be decontaminated daily by setting the cartridge aside, disassembling the masks, placing all parts in a cleaning solution and rinsing them with tap water. Old cartridges, as well as discarded personal protective gear from the decontamination of the tank storage areas will be collected and disposed of off-site as hazardous waste. Small manual tools and equipment used during decontamination, such as brushes, gloves, disposable suits, etc., will

be collected in a 55-gallon drum and disposed of as hazardous waste using licensed transporters and permitted disposal facilities. Portions of larger tools (i.e. - lifts, hoists, etc.) which have come in contact with the waste will be decontaminated by steam cleaning. All rinseate generated during decontamination activities will be collected and disposed of as hazardous waste.

10. Verification sampling will be performed according to the following procedure. Each of the areas, after decontamination, will be gridded and sampled at locations corresponding to randomly selected grid nodes. The size of the grid interval is determined by this generally accepted mathematical formula:

$$GI = (A / 3.14)^{0.5} / 2, \text{ where:}$$

GI = grid interval, ft
A = area to be gridded, sq. ft.

The calculated value for the grid interval is then rounded off to the nearest integer and the tank containments are gridded. The number of samples to be obtained from each slab is as shown in Table H-4. A random number table or generator is typically used to determine which grid nodes or grid area will be sampled.

Each of the 16 tank storage areas at the Centralized Waste Storage and Transfer Facility will be gridded separately to ensure that statistically significant data will be obtained from each area. The exact locations of these samples are shown in Figure H-1 for how each of the areas will be sampled.

One sample will be collected from each 100 sf area within the containment. (A minimum of three test samples will be collected from each containment area). Table H-4 outlines the number of verification samples required to be collected from the tank storage areas in the Centralized Waste Storage and Transfer Facility. In addition to these samples, each containment sump will be sampled, raising the number of samples to be collected to the value shown in the last column of Table H-4. The locations of the containment sumps are also shown in Figure H-1.

All samples will consist of concrete chip samples collected with a chisel or concrete hammer drill. The portion of the tool in direct contact with the concrete will be cleaned between samples using an industrial non-phosphate detergent wash and a tap water rinse.

The resulting concrete chips will be transferred directly into laboratory supplied glassware. The field QA/QC program for concrete chip samples will include one duplicate for every 10 samples and one trip blank to accompany the samples to the laboratory. Immediately

TABLE H-4
TANK STORAGE AREAS
VERIFICATION SAMPLING

Item	Process	Area (Sq. Ft.)	Grid Interval(Ft)	No. of Grid Nodes	No. of Grid Samples	No. of Sump Samples	Total No. of Samples
Centralized Waste Storage and Transfer Facility:							
	Tank Storage Area (Typical of 16)	321	5	19	3	1	4

NOTE: The sump samples (judgement sampling) will be collected in addition to the statistically required grid samples. Other judgemental samples will be collected based on an integrity assessment of each of the areas being closed.

following sample collection, each sample will be labelled and placed in an iced cooler. The samples will be transported under full chain-of-custody to a State of Connecticut approved laboratory. The analytical testing and determination procedures are presented in Section C of this Closure Plan.

11. If based on an evaluation of the analytical data (comparison to available health/risk based levels or background) the decontamination efforts are deemed incomplete, the decontamination will be repeated until follow-up sampling demonstrates that parameters are at, or below health/risk standards or are consistent with background levels. Any concrete chip sampling areas which exhibit levels consistent with background and either above or below health/risk levels will be considered representative of ambient background levels. Decontamination efforts will therefore be deemed complete, unless it is determined that background samples have been contaminated with the waste.

    On the other hand, if repetitive decontamination efforts and subsequent sampling procedures fail to provide satisfactory data, then concrete coring will be performed to determine whether hazardous constituents have reached the subgrade, underneath the concrete slab. If this is the case, P&W will submit a modified Closure Plan to the CTDEP outlining additional specific procedures to be followed for closure of these areas.

12. Complete the certification of closure as presented in Section B(b)(5) of this Closure Plan. Within 60 days of completion of all closure activities, the Certification of Closure and closure documents will be sent by registered mail to the Commissioner of the Connecticut Department of Environmental Protection.

C. LABORATORY ANALYSIS AND DATA EVALUATION

The analytical methods that will be used for analysis of concrete samples will be those described in the latest edition of EPA Publication SW-846 - Test Methods for Evaluating Solid Waste. The designated laboratory will follow all applicable internal QA/QC procedures outlined in SW-846.

Upon receipt of the analytical data, an initial evaluation of the results will be performed through data validation. Data validation includes a review of field QA/QC procedures (i.e. trip blanks, field duplicates) and laboratory QA/QC procedures (i.e. holding times, blind duplicate analysis, surrogate recoveries). Data points that are not adequately supported by the QA/QC procedures will be referred to the sampling team and/or the laboratory for appropriate corrective actions.

Upon completion of data validation, the results will be compared to background data points and the relevant and appropriate regulatory standards and criteria. An explanation of how this will be performed is presented below.

Data Evaluation

As previously stated, decontamination of the storage areas will be demonstrated complete by concrete chip sampling and comparison to regulatory and background levels.

Test results will be compared to the Health/Risk based target standards specified in the interim final RCRA Facility Guidance (EPA-530/SW-89-031). If any parameter exceeds the applicable target standard, then decontamination will be deemed incomplete in the area of

that sample. Decontamination efforts will continue until follow-up sample data achieves the applicable target standard.

For constituents for which a health/risk based standard is not available, comparison will be made to background data. The analytical results of these samples will be statistically analyzed using Cochran's approximation to the Behrens-Fisher Students' t-Test (40 CFR Part 264, Appendix IV). If the reported concentration of a specific constituent is the method detection limit, the numerical value of the method detection limit will be used in the calculations. The mean and variance of the background samples will be used to determine if clean standard verification samples contain significant constituent concentrations at a 95 percent confidence level. If any parameter exceeds the corresponding background level, decontamination will be considered incomplete in the area of that sample. Decontamination efforts will continue until follow-up sample data achieves the corresponding background level.

D. MAXIMUM CLOSURE COST ESTIMATE

The estimated closure cost for the Centralized Waste Storage and Transfer Facility is $1,635,777 dollars. A breakdown of the closure cost for the CWS&TF is provided in Table 5. All costs assume performance of closure activities by a qualified third-party contractor. The estimates assume that the maximum waste inventory will be present at closure.

The closure cost estimate will be revised whenever a change in the closure plan affects the cost of closure. The closure cost will be adjusted annually as described in 40 CFR 264.14(b).

All costs provided in Table 5 include overhead for conventional type of work (construction, sampling, decontamination, etc.). The additional insurance costs (estimated approximately at 7%) account for the incremental overhead required for work involving hazardous waste.

TABLE H-5
MAXIMUM CLOSURE COST ESTIMATE
CENTRALIZED WASTE STORAGE AND TRANSFER FACILITY

ACTIVITY DESCRIPTION	COST
Initial Sampling (Appendix IX)	
9 areas x 2 samples x $4,500/ea:	$ 81,000.00
9 areas x 16 mh x $60/hr:	$ 8,640.00
Removal & Disposal of Waste Inventory (1)	
59,400 gal x $8/gal (non-bulk):	$ 475,200.00
96,000 gal x $2/gal (bulk):	$ 192,000.00
Background Sampling & Analysis	
2 samples x $1,200/ea:	$ 2,400.00
16 mh x $60/hr:	$ 960.00
Concrete Coring Equip. Rental:	$ 500.00
Development of CSP list	
60 mh x $60/hr:	$ 3,600.00
Development of Health & Safety Plan:	$ 3,000.00
Dismantle and Disposal of Aboveground Tanks and Ancillary Equipment	
400 mh x $40/hr:	$ 16,000.00
Disposal:	$ 44,000.00
Decontamination of Concrete Containments	
1,200 mh x $40/hr:	$ 48,000.00
Equipment Rental:	$ 3,000.00
Collection & Analysis of Confirmational Samples	
388 samples x $1,200/ea:	$ 465,600.00
370 mh x $60/hr:	$ 22,200.00
Removal and Disposal of Contaminated Concrete	
Allowance (40 tons):	$ 20,000.00
Data Evaluation & Closure Certification	
200 mh x $60/hr:	$ 12,000.00
Subtotal:	$1,398,100.00
Insurance (7%):	$ 97,867.00
Contingency (10%):	$ 139,810.00
Total: (Centralized Waste Storage and Transfer Facility)	$1,635,777.00

mh: manhours
(1): Assumes maximum inventory present at closure.

E. FINANCIAL ASSURANCE

The required financial assurances for closure and pollution liability coverage are presented in Exhibit H-1 in the following order:

- A letter from UTC's Executive Vice President and Chief Financial Officer, John A. Rolls, transmitting financial documentation to the DEP, dated March 27, 1991 including Exhibit A.
- A special report by Price Waterhouse, independent Certified Public Accountants, dated March 27, 1991.
- Letter from UTC's Executive Vice President and Chief Financial Officer, John A. Rolls to the CTDEP dated, March 27, 1991.
- Cover letter from Felicia DeDominicis of United Technologies to the CTDEP, copied to the EPA and dated March 27, 1991.
- UTC Annual Report 1990.

SECTION G - PERSONNEL TRAINING

1. General

Owners and operators of hazardous waste treatment, storage and disposal facilities are required to provide hazardous waste management personnel with training in hazardous waste management and spill response procedures. A description of Pratt & Whitney's personnel training program is contained herein. This program addresses the East Hartford Facility for regulatory requirements related to hazardous waste management.

2. Training Program

The personnel training program at the P&W East Hartford facility addresses the facility training needs for regulatory requirements related to the management of hazardous waste. The main features of the personnel training program are presented below.

(a) Program Overview

The personnel training program consists of a modularized approach which divides training into its smaller, simpler tasks. This approach allows specific training for people performing different processes and/or using different materials. Each trainee proceeds through a logical module flow, called a curriculum path, based on his training needs. This allows a more effective transfer of acquired knowledge from the classroom to the job.

The program consists of the following major components:

(i) Module List

(ii) Job Function Categories

(iii) Training Matrix

(iv) Module Descriptions

The training curriculum described below is a more detailed discussion of the above major components.

(b) Training Curriculum

The main components of the training curriculum are discussed in this section, in the same order as listed above.

The Module List contains a listing of the training modules in the P&W Environmental, Health and Safety (EHS) training system. The Module List contains the course codes and course titles.

The Job Function Categories component consists of groupings of job functions with the corresponding group code. Certain group codes are used to identify employees that, due to their job duties, may be required to handle special types of materials, and would therefore be required to receive special training.

The Training Matrix correlates the various group codes with the required training modules, including refresher courses. The matrix shows how the job function categories match up against the training modules and refresher courses.

The Module Descriptions provide an explanation of the content of each module, including refresher courses.

(c) Training Computer System

The training computer system is the administrative and tracking mechanism used to assist in the implementation of the Training Curriculum described above. Individual employee records indicate assigned job function categories, training requirements and training history. Course completion data are entered into the system and employee profiles are available on computer terminals which list these courses.

The system also tracks changes in employee status to indicate new hires and transfers who require initial or additional training.

(d) Responsibilities

The East Hartford Training Administrator oversees the training program for the East Hartford site, audits for compliance to regulatory and program requirements, and works with the P&W Group Environment, Health & Safety Organization to maintain the course curriculum and develop training in response to new requirements or changes.

The employee's supervisor is responsible for assigning each employee a group code and ensuring that employees attend required training modules.

(e) Course Content

The course content is included in the Training Module Descriptions and a Training Matrix is used to specify which course modules are required for each job function category. Course content outlines for courses related to hazardous waste management are provided in Appendix G-1.

Topics related to hazardous waste are covered in a series of course modules. The content of each module is tailored to the specific needs of the audience attending the course.

(f) Frequency

The module titled "ENVIRONMENTAL TRAINING FOR EMPLOYEES" is delivered within 6 months of initial employment or transfer into an applicable category. Refresher courses are provided annually thereafter. Other modules are delivered in a timely manner such that the employee receives appropriate training before performing duties for which this training is prerequisite.

3. Personnel Trained

Individuals with hazardous waste management responsibilities at the facility, including emergency response personnel, receive training under this program. Job titles for the positions currently trained at the facility are listed below along with a brief description of the hazardous waste management responsibilities of the position. The names of the specific individuals filling these positions is maintained at the East Hartford facility in the operating record.

a. Within the Environmental Protection Group the following have been trained:

Manager, Environment, Health & Safety
Manager, Facilities Engineering
Supervisor, Facilities Engineering
Facilities Project Engineer
Sr. Facilities Engineer
Facilities Engineer
Engineering Associate
Foreman (Supervisor), Manufacturing Support or Facility Services

These individuals are responsible for the overall management of hazardous waste and facility environmental compliance. Their duties require that they maintain operating logs and ensure regulatory compliance. Recordkeeping responsibilities include monitoring records, inspection logs, personnel training records and other required records. Some of these individuals also act as environmental compliance coordinators, have emergency response duties in coordination with the Incident Commanders, review regulations, or are involved in systems management. These individuals receive training per the following two modules:

*ENVIRONMENTAL TRAINING FOR EMPLOYEES

*TREATMENT, STORAGE, DISPOSAL AND SHIPMENT OF HAZARDOUS WASTE

Some of these individuals also receive training per the module titled "EMERGENCY RESPONSE LEVEL 3 - HAZARDOUS MATERIALS TECHNICIAN".

b. All Waste Treatment Operators are trained. Their job titles are as follows:

Lead Environmental Systems Servicer
Environmental Systems Servicer
Utility Worker - Mechanical

These personnel are involved in the Waste Treatment Plant operations, hazardous waste movement and storage. These individuals receive training per the following modules:

*ENVIRONMENTAL TRAINING FOR EMPLOYEES

*TREATMENT, STORAGE, DISPOSAL AND SHIPMENT OF HAZARDOUS WASTE

*EMERGENCY RESPONSE LEVEL 3 - HAZARDOUS MATERIALS TECHNICIAN

c. Emergency response personnel at the facility are also trained. These individuals can have Incident Commander duties, Fire Protection duties, including fires involving hazardous waste, and equipment inspection and emergency preparedness responsibilities. Their job titles and corresponding job codes are as follows:

Fire Protection Engineer
Fire Chief
Fire Captain
Fire Lieutenant
Senior Equipment Services Technician
Plant Protection Communications Operator
Emergency Equipment Operator
Maintainer, Portable Fire Equipment/
Fire Fighter
Driver, Fire Apparatus
Plant Protection Officer

Some of these individuals receive training per the following modules:

*ENVIRONMENTAL TRAINING FOR EMPLOYEES

*EMERGENCY RESPONSE LEVEL 3 - HAZARDOUS MATERIALS TECHNICIAN

4. Training Instructors

The training courses are delivered using a variety of techniques including live instruction, video taped instruction, participant's manuals, etc. Instructors are in-house personnel or outside contractors with particular expertise in the course material. Instructors are carefully selected to ensure effectiveness.

APPENDIX G-1

COURSE CONTENT OUTLINES

ENVIRONMENTAL TRAINING FOR EMPLOYEES

- Resource Conservation and Recovery Act (RCRA)
- Components of Hazardous Waste Management
- Hazardous Waste Management Requirements for Large Quantity Generators
- Hazardous Waste Accumulation and Storage:

  *Point of Generation Accumulation Area Standards (as applicable).

  - Container Management Practices for Point of Generation Accumulation Areas.
  - Inspection of Point of Generation Accumulation Areas.

  *Less than 90-Day Storage Area Standards (as applicable).

  *Greater than 90-Day Storage Area Standards (as applicable).

TREATMENT, STORAGE, DISPOSAL AND SHIPMENT OF HAZARDOUS WASTE

- Waste Analysis

  *Written Waste Analysis Plan
  *Obtaining a Representative Sample

- Security

  *Site Control
  *Posted Signs

- Inspections

  *Developing and following a written Inspection Schedule

  *Remedying deterioration or malfunctions

- Overview of Large Quantity Generator (LQG) requirements:

  *Container management and handling

  *Preparedness and Prevention

  *Contingency Planning and Emergency Procedures

- Manifest System

- TSDF waste feed cut-off systems, communications and alarm systems, and shutdown of operations.

EMERGENCY RESPONSE LEVEL 3 - HAZARDOUS MATERIALS TECHNICIAN

- Know how to implement the Emergency Response Plan and Contingency Plan.
- Know the classification, identification and verification of known and unknown materials by using field survey instruments and equipment.
- Be able to function within an assigned role in the Incident Command System.
- Know how to select and use proper specialized chemical personal protective equipment provided to the hazardous materials technician.
- Understand hazard and risk assessment techniques.
- Be able to perform advance control, containment, and/or confinement operations within the capabilities of the resources and personal protective equipment available within the unit.
- Understand and implement decontamination procedures.
- Understand termination procedures.
- Understand basic chemical and toxicological terminology and behavior.

Permit No. CTD990672081

ATTACHMENT E

INSPECTION LOGS AND SCHEDULES

Permit No. CTD990672081

APPENDIX E-1

CWS&TF INSPECTION LOGS

MODEL INSPECTION LOG

Unit: Centralized Waste Storage and Transfer Facility-Container Storage Area
Frequency: Weekly

Date:__/__/__
Name:_____
Clock:_____
Down Time:_____

INSPECTION POINT		S	U
1. Containers:	Check for signs of leaks, weakness or deterioration. Remove and repack where necessary.	--	--
	Check for open containers, damaged labels, proper labeling and marking.	--	--
2. Pallets:	Check for breaks, weakness or deterioration. Replace as necessary.	--	--
3. Aisle space:	Check for adequate aisle spaces.	--	--
4. Floor:	Check for signs of cracks, gaps or other deterioration. Inspect coatings for damage and signs of deterioration.	--	--
5. Sumps:	Check for liquid, debris or other matter Remove liquids within 24 hours.	--	--
6. Compatibility:	Check for proper segregation of incompatibles. Verify identification signs with compatibility groups.	--	--
7. Signs:	Check for presence and condition of warning signs.	--	--
8. Equipment:	Check for proper inventory of spill control and personnel safety equipment.	--	--
9. Inventory:	Count number and size of containers in each containment area.	--	--

Containment Area Number	Container Size, gallons	Number of Containers

10. Report deficiencies to Foreman.

LIST ALL DEFICIENCIES, CORRECTIVE ACTION TAKEN AND DATE TAKEN:

_____
Technician Signature

MODEL INSPECTION LOGS

Unit: Centralized Waste Storage and Transfer Facility-Tanks
Page One of Two

Date: ___/___/___
Name: _____
Clock: _____
Down Time: _____

Frequency: Daily

INSPECTION POINT		-- S --	-- U --
1. Tanks:	Check the leak detection system.	-- --	--
	Check the level control systems.	-- --	--
	Check for leaks or deterioration in tank walls, seams, and covers.	-- --	--
2. Containment Areas:	Check for the presence of cracks, faults and leaks and inspect coating for damage and signs of deterioration.	-- --	--
	Check for the presence of standing liquid, debris or other matter and clean where necessary. Remove liquid within 24 hours.	-- --	--
3. Tank Interior:	Check for cracks, faults and deterioration of the walls when the tank is empty.	-- --	--
4. Pipelines:	Check lines leading to and from tanks for leaks, cracks, sags, and other signs of deterioration.	-- --	--
5. Pumps:	Check tank associated pumps for leaks and other operational problems.	-- --	--
	Check pump sumps for liquid, debris, or other matter and clean where necessary. Remove liquid within 24 hours.	-- --	--
6. Valves:	Check for leaks and operational problems.	-- --	--
7. Signs:	Check for presence and condition of warning signs.	-- --	--
8. Equipment:	Check for proper inventory of spill control and personnel safety equipment.	-- --	--

MODEL INSPECTION LOGS

Unit: Centralized Waste Storage and
Transfer Facility-Tanks
Page Two of Two

Date: ____/____/____
Name: _____
Clock: _____
Down Time: _____

Frequency: Daily

INSPECTION POINT	-- S --	-- U --
9. Inventory: Check digital level readout for each tank.	--	--

Tank Number	Volume of Waste, gallons

10. Report all deficiencies to foreman.

LIST ALL DEFICIENCIES, CORRECTIVE ACTION TAKEN AND DATE TAKEN:

_____
Technician Signature

MODEL INSPECTION LOG

Unit: Centralized Waste Storage and Transfer Facility-Container Staging Area
Frequency: Daily When in use

Date: ___/___/___
Name: _____
Clock: _____
Down Time: _____

INSPECTION POINT		S	U
1. Containers:	Check for signs of leaks, weakness or deterioration. Remove and repack where necessary.	—	—
	Check for open containers, damaged labels, proper labeling and marking.	—	—
2. Pallets:	Check for breaks, weakness or deterioration. Replace as necessary.	—	—
3. Aisle space:	Check for adequate aisle spaces.	—	—
4. Floor:	Check for signs of cracks, gaps or other deterioration. Inspect coatings for damage and signs of deterioration.	—	—
5. Sumps:	Check for liquid, debris or other matter Remove liquids within 24 hours.	—	—
6. Compatibility:	Check for proper segregation of incompatibles.	—	—
7. Signs:	Check for presence and condition of warning signs.	—	—
8. Equipment:	Check for proper inventory of spill control and personnel safety equipment.	—	—
9. Inventory:	Count number and size of containers in each containment area.	—	—

Containment Area Number	Container Size, gallons	Number of Containers

10. Report deficiencies to Foreman.

LIST ALL DEFICIENCIES, CORRECTIVE ACTION TAKEN AND DATE TAKEN:

_____
Technician Signature

MODEL INSPECTION LOG

Unit: Centralized Waste Storage and Transfer Facility
Loading/Unloading Area
Frequency: Daily When in Use

Date: ___/___/___
Name: _____
Clock: _____
Down Time: _____

INSPECTION POINT		-- S --	-- U --	
1. Floor:	Check for signs of cracks, faults or other deterioration. Inspect coatings for damage and signs of deterioration.	--	--	--
2. Sumps:	Check for the presence of cracks, faults and leaks and inspect coating for damage and signs of deterioration.	--	--	--
	Check for the presence of standing liquid, debris or other matter and clean where necessary. Remove liquid within 24 hours.	--	--	--
3. Signs:	Check for presence and condition of warning signs.	--	--	--

4. Report deficiencies to Foreman.

LIST ALL DEFICIENCIES, CORRECTIVE ACTION TAKEN AND DATE TAKEN:

_____
Technician Signature

INSPECTION GUIDE

The information contained in this inspection guidance is designed to compliment the information on the actual inspection forms by providing more detailed information to the inspector regarding the inspection items.

CONTAINERS:
- Containers showing signs of leaks, weakness or deterioration must be removed and repacked.
- Lids and hinges should be securely fastened.
- Hazardous waste label and descriptive information should be completely legible and visible from the aisle.
- Containers should be well balanced and stacked at a maximum of two high. Containers should not overhang the pallets.

PALLETS:
- Pallets should be sturdy and free from cracks, weak spots and deteriorating areas.
- If pallets are wet or stained, containers should be further inspected for leaks.

FLOOR:
- Floor should be without cracks and gaps and the floor's protective coating must be free from deterioration or damage.

AISLE SPACE:
- A minimum of 30 inches should be provided between rows of pallets or transporters and between adjacent wall and pallets or transporters.

COMPATABILITY:
- Wastes generated at Pratt & Whitney are given a unique P&W Identification Number that is based upon the chemical characteristics of the waste. Before wastes are placed into container areas, the waste ID numbers and receiving area number are logged into a computer system and the computer checks to see if the waste will be compatible with waste already in the area. This ensures that all wastes in the containment area are compatible. A printout of this information should be obtained prior to inspecting container storage areas for waste compatibility and any wastes found in the containment area that are not on the list should be removed and properly relocated.

LOADING:
- Check for leaks that may result from the continuous loading and unloading of containers.

SIGNS:
- Warning signs including "DANGER UNAUTHORIZED PERSONNEL KEEP OUT" for every area and "NO SMOKING" signs for flammable, ignitable or reactive waste areas should be clearly posted.

EQUIPMENT:
- The Spill and Personnel Safety Equipment should be checked against an inventory list to ensure that all items are present.

INSPECTION GUIDE (Cont'd)

SUMPS:	- Check for liquids or debris in the sumps. Liquids must be removed within 24 hours.
TANKS:	- Check the leak detection and level control systems to ensure operation in accordance with manufacturers specifications. In addition, check for signs of leaks, deterioration or corrosion in tank walls, seams and covers.
TANK CONTAINMENT AREA:	- Check for signs of cracks, gaps, faults or other deterioration of containment curbs or berms.
	- Check for signs of deterioration in the protective coating.
PIPELINES:	- Check for leaks, cracks, sags or other signs of deterioration in any line leading to or from the tank.
PUMPS:	- Check for leaks or operational problems.
VALVES:	- Check for leaks or operating problems.
INVENTORY:	- Record digital readout of volume of waste in tank.

APPENDIX E-2

FIRE EQUIPMENT INSPECTION REQUIREMENTS

A. FIRE PROTECTION SYSTEMS/EQUIPMENT

1. Fixed Systems

A. Sprinklers

Types of Systems: Wet, dry, deluge and preaction.

1. Weekly/monthly/bimonthly valve inspection as required
2. Weekly inspection of dry valves
3. Weekly/monthly test of curb box valves as required
4. Monthly/bimonthly test of waterflow alarms
5. Test valves as required
6. Trip test dry valves every 3 years
7. Trip test all dry valve quick opening devices annually
8. Trip test deluge and preaction valves annually
9. Relocation of sprinklers
10. Sprinkler shutdown patrol
11. New installations: make recommendations, review proposed installations/relocations, monitor installation, assist with connections to existing systems, acceptance test
12. Inspect buildings for proper sprinkler installation
13. Sprinkler system maintenance
14. Maintain required records/enter information in computer
15. Provide cold weather inspection and maintenance including specific gravity readings on all non-freeze systems
16. Monitor installation of underground fire mains, witness flushing and hydrostatic testing

Required by:	NFPA 13, 13A, 15, 26	OSHA Subpart L
	DAR Appendix B	Insurance Carriers
	Connecticut Fire Safety Code	Company Policy

B. Other Fixed Systems

Carbon dioxide (high and low pressure), dry chemical, foam, Halon 1301, manual water spray.

1. Weekly inspection of all systems
2. Test all systems as required (interval varies)
3. Determine agent contents by weight or liquid level
4. System maintenance
5. Annual trip tests
6. New installations: make recommendations, review plans, monitor installation, acceptance tests

Required by:	NFPA 11, 12, 12A, 15, 16, 17	OSHA Subpart L
	Insurance Carriers	DAR Appendix B
	Connecticut Fire Safety Code	Company Policy

2. Portable Equipment

Types of portable equipment: CO_2 (5lb. to 75 lbs.), dry chemical (4 lb. to 350 lbs.), 2.5 gallon pressurized water, Met-L-X, 33 gallon AFFF and Halon 1211 fire extinguishers; nitrogen cylinders, Scott-Air Paks.

1. Monthly inspection of equipment at P&W and leased facilities.
2. Six month servicing of all extinguishers.
3. Repairing, replacing parts, etc. for extinguishers.
4. Hydrostatic test as required for all extinguishers and cylinders.
5. Recharging extinguishers, air and nitrogen cylinders.
6. Installing and relocating extinguishers & air-paks.
7. Reconditioning fire equipment (painting, cleaning, polishing).
8. Installing signs, stripes etc. for location identification.
9. Care and maintenance of test & maintenance equipment.
10. Reviewing buildings for proper extinguisher placement.
11. Purchase of extinguisher replacement equipment.
12. Purchase of extinguishing agent.
13. Inventory control of extinguishers, parts & agent.
14. Maintain required records/computer entry.

Required by:

NFPA 10 OSHA Subpart L,I	Insurance Carriers
Connecticut Fire Safety Code	DAR Appendix B
DOT 49 CFR XX	

3. Fire Pumps and Suction Tanks

1. Daily inspection of fire pump house and tanks.
2. Weekly test of fire pumps (manual start, automatic start, check of interlocks and alarms, evaluate condition of pumps, diesel engine and electric motor drives, jockey pump, controllers and tanks).
3. Annual waterflow tests (shutoff, 100% and 150% capacity, pressure and rpm).
4. Annual test of controllers and interlocks.
5. Plot test results to compare against previous results and certified pump curves.

Required by:

NFPA 20, 22, 26	Insurance Carriers
DAR Appendix B	Connecticut Fire Safety Code
Company Policy	

B. ALARM AND DETECTION SYSTEMS

Types of detection systems: Heat (fixed temperature, rate-of-rise), smoke (ionization, photoelectric), optical (flame, infrared, ultra-violet).

Types of alarms: Manual pull stations, waterflow, valve tamper, detection systems, watch tour, low air pressure (dry systems), fixed fire protection systems, fire pumps (running, off automatic, trouble), water level and temperature (suction tanks and gravity tanks).

1. Daily tests.
2. Maintenance & troubleshooting of systems.
3. Relocation of Fire Alarm boxes.
4. Testing & maintenance of KDR panels.
5. Testing & maintenance of batteries & emergency generator.
6. New installation: recommendations, review specs, monitor, installation, assist w/connections, program events, acceptance tests.
7. Maintain records/enter information in computer.
8. Monthly test of detector in each system & system inspection.
9. Yearly test, cleaning, calibration of all detectors & system components.
10. Correcting false alarm conditions.
11. Relocation of detectors & equipment.

Required by:	NFPA 72A, 72D, 72H, 37	OSHA Subpart L
	Insurance Carriers	Company Policy
	Conn. Fire Safety Code	Gov't. Contract Admin.

C. HOSE AND HYDRANTS

Fire hose (1 1/2", 2 1/2", single jacket, double jacket), inside hose boxes and cabinets, outside hose houses and hose boxes.

1. Yearly hydrostatic test of 50% of fire hose.
2. Rebutting salvageable hose.
3. Replacing hose older than 20 years.
4. Ordering, inspecting & numbering new hose.
5. Inspecting hose boxes & hose houses for proper equipment.
6. Care & maintenance of fire hose.
7. Monthly inspection & yearly flushing and test of hydrants.
8. Hydrant maintenance (lubricate, seats, seals).
9. Required records/computer entry.

Required by:	NFPA 14, 24, 1961, 1962, 1963	OSHA Subpart L
	Insurance Carriers	Conn. Fire Safety Code

MODEL INSPECTION LOG

Unit: Fence

Frequency: Quarterly

Date: ___/___/___
Name: _____
Clock: _____
Down Time: _____

INSPECTION POINT		— S —	U —
1. Base:	Check for bends, cuts and rust	—	—
2. Top:	Check for bends, cuts and rust.	—	—
3. Posts:	Check for stability and structural integrity.	—	—
4. Gates	Check latches, hinges, rollers and electrical motors.	—	—

5. Report deficiencies to Foreman.

LIST ALL DEFICIENCIES, CORRECTIVE ACTION TAKEN AND DATE TAKEN

_____
Technician Signature

UNITED TECHNOLOGIES PRATT&WHITNEY

400 Main Street
East Hartford, Connecticut 06108
203/565-2453

Ronald H. Henson
Vice President-
Environment, Health and Safety

June 18, 1993

Mr. David A. Nash, Director
Waste Engineering and Enforcement Division
Department of Environmental Protection
79 Elm Street
Hartford, CT 06106

RE: RCRA Part B Draft Permit, Section III

Dear Mr. Nash:

Per our RCRA Part B Draft Permit, Section III B, Pratt & Whitney hereby certifies that the Concentrated Waste Storage and Transfer Facility (CWS&TF) is fully operational as of June 15, 1993. As of this date, Pratt & Whitney will begin to transition from the current interim status units to the CWS&TF. As previously established, we will continue to operate the original Interim Status units under Interim Status until the transition is complete on July 29, 1993. Under no time will the combined storage capacity of the original units and the CWS&TF exceed the volumes set forth in the RCRA Part A Application. From June 15 until the issuance of the Part B Permit, the CWS&TF will operate under Interim Status.

If you have any questions or require further information, please contact Glen D. Bianchi at (203) 565-9342.

Sincerely,

Raymond L. Dumouchel for
Ronald H. Henson

RHH/GDB/saw:5d

cc: R. Barlow, Chief - Bureau of Waste Management, CT DEP
L. Clune, Waste Engineering and Enforcement Engineer, CT DEP
G. Dews, Waste Engineering and Enforcement, CT DEP
T. Keeney, Commissioner, CT DEP
J. Podgurski, U.S. EPA, Region I
D. Sattler, Waste Engineering and Enforcement, CT DEP

RECEIVED
JUN 23 1993
CT WASTE REGULATION SECTION

STATE OF CONNECTICUT
DEPARTMENT OF ENVIRONMENTAL PROTECTION

May 21, 1993

John Podgurski, Chief
Connecticut Waste Regulation Section
USEPA - Region I, HEE-CAN 6
JFK Federal Building
Boston, MA 02203

RE: Public Notice
Pratt & Whitney
East Hartford
CTD990672081

Dear Mr. Podgurski:

Enclosed are the copies of the Public Notices which will appear in the Classified Section of The Hartford Courant on May 24, 1993 and broadcast on WTIC (AM) on May 24, 1993.

Sincerely,

David A. Nash
Director
Waste Engineering and
Enforcement Division
Waste Management Bureau

DAN:LMC:sr

enclosure - Public Notice/paper
Public Notice/radio

cc: Glen Bianchi, Pratt & Whitney

STATE OF CONNECTICUT
DEPARTMENT OF ENVIRONMENTAL PROTECTION

May 21, 1993

CERTIFIED MAIL
RETURN RECEIPT REQUESTED

Glen D. Bianchi
Senior Environmental Engineer
Pratt & Whitney
MS-122-16
400 Main Street
East Hartford, CT 06108

RE: Public Notice
Pratt & Whitney
East Hartford
CTD990672081

Dear Mr. Bianchi:

Enclosed are copies of the Public Notices which will appear in the Classified Section of The Hartford Courant on May 24, 1993 and be broadcast on WTIC (AM) on May 24, 1993.

Sincerely

David A. Nash
Director
Waste Engineering and
Enforcement Division
Waste Management Bureau

DAN:LMC:sr

enclosure - Public Notice/paper
Public Notice/radio

cc: Jeff Loureiro, Loureiro Engineering Assoc.
John Podgurski, US EPA Region I

PUBLIC NOTICE

Pratt and Whitney
East Hartford, Connecticut
CTD 990672081

The following is a Public Notice from the Connecticut Department of Environmental Protection:

The Department of Environmental Protection (DEP) has made a tentative determination to issue a hazardous waste facility storage permit to Pratt and Whitney, a division of United Technologies Corporation, located at 400 Main Street in East Hartford, Connecticut. The proposed permit sets forth the necessary standards and conditions to ensure that the facility complies with all State and Federal hazardous waste regulations. The permit will allow Pratt and Whitney to continue to store hazardous waste in tanks and containers.

The draft permit, a fact sheet, and other materials are available for public inspection at the DEP offices on the second floor at 18-20 Trinity Street in Hartford, CT and at the Office of the Town Clerk at the Town Hall, 740 Main Street in East Hartford, CT. Comments on the draft permit or requests for a public hearing are invited from interested persons. Prior to making a decision to approve or deny the permit, the DEP will consider all comments which are received by

For more information regarding the application contact Lynn Clune of the Waste Management Bureau of the Department of Environmental Protection at 566-4869.

for Richard J. Barlow
Chief
Waste Management Bureau
Department of Environmental Protection

Date: May 24, 1993
Radio Station: WTIC (AM)

PUBLIC NOTICE

Pratt and Whitney
East Hartford, Connecticut
CTD990672081

In accordance with Chapters 439 and 446k of the Connecticut General Statutes, the Connecticut Department of Environmental Protection (DEP) is hereby providing Public Notice concerning the intent to issue a hazardous waste storage facility permit to Pratt and Whitney (P&W), a division of United Technologies Corporation (UTC), located at 400 Main Street, in East Hartford, Connecticut. P&W has been operating a hazardous waste storage facility under Resource Conservation and Recovery Act (RCRA) Interim Status, pursuant to Section 22a-449(c) of the Connecticut General Statutes since 1980.

The principal business of P&W is design, manufacture, assembly, and testing of aircraft jet engines and engine components, including:

- Fabricating,
- Cleaning,
- Finishing,
- Coating,
- Testing, and
- Research Operations.

The types of hazardous wastes generated on-site and received at the facility from the above activities can be divided into the following general categories:

- Acids,
- Alkalies,
- Chromium,
- Cyanides,
- Solvents,
- Oils,
- Organic Solids,
- Inorganic Solids,
- Paint Wastes,
- Metal Hydroxide Sludge/Debris, and
- Laboratory Chemicals and Commercial Chemical Products.

P&W intends to store on-site and receive from other United Technologies Corporation (UTC) facilities both characteristic and listed hazardous wastes generated from similar process sources.

After receipt, the hazardous waste chemicals are stored with hazardous waste and other materials being sent off-site for further treatment, storage or disposal at approved and permitted RCRA facilities or it is treated in the NPDES Permitted Wastewater Treatment System. No hazardous wastes are disposed of on-site. All hazardous wastes are either treated on-site or shipped off-site to an approved and permitted facility.

P&W utilizes both containers and tanks in order to managed hazardous wastes on-site. The facility is designed to manage 59,400 gallons of hazardous waste and other materials on-site in containers, and 96,000 gallons of hazardous waste and other materials on-site in tanks.

The Commissioner of DEP is authorized to approve or deny a hazardous waste facility permit pursuant to Section 22a-449(c)-100 through -110 of Connecticut's Hazardous Waste Management Regulations. On the basis of a review by staff members of DEP in accordance with Section 22a-449(c)-100 through -110 of the Regulations of the Connecticut State Agencies and Sections 264 and 270 of Title 40 of the Code of Federal Regulations, the Commissioner of DEP has made a tentative determination that hazardous wastes can be properly managed at the facility.

A Draft hazardous storage facility Permit has been prepared for the Pratt and Whitney, 400 Main Street, East Hartford facility. This Permit is for receipt of hazardous wastes from off-site UTC facilities, and for storing wastes generated on-site and received from off-site UTC facilities for greater than ninety (90) days prior to treatment or disposal off-site. The Draft hazardous waste Permit contains terms and conditions that are designed to include all performance standards applicable to the facility in accordance with the above cited statutes and regulations, as well as additional conditions deemed necessary by DEP in order to protect human health and the environment.

The Draft facility Permit, a fact sheet for the Draft facility Permit, and other materials are available for public inspection at the Connecticut Department of Environmental Protection office between 8:30 a.m. and 4:30 p.m. Monday through Friday, and at the East Hartford Town Clerk's Office at the Town Hall between 8:30 a.m. and 5:00 p.m. Monday through Friday, excluding state and/or federal holidays:

Department of Environmental Protection
Waste Management Bureau
Waste Engineering and Enforcement Division
165 Capitol Avenue
Hartford, CT 06106
Telephone: (203) 566-4869

R. Bryan Fitzgerald, Town Clerk
740 Main Street
East Hartford, CT 06108
Telephone: (203) 291-7100

Any person may submit written comments on the issuance of the Draft Permit to DEP any time within 45 days of this Public Notice and these comments will also be entered into the administrative record. These written comments should be sent to:

Lynn M. Clune
Department of Environmental Protection
Waste Management Bureau
Waste Engineering and Enforcement Division
165 Capitol Avenue
Hartford, CT 06106

Interested parties may also contact Lynn M. Clune, of the Waste Engineering and Enforcement Division, at (203) 566-4869, from 8:00 a.m. until 3:00 p.m. on weekdays for further information.

The State of Connecticut DEP has received final authorization to administer the RCRA hazardous waste program in lieu of the Federal Government. Therefore, Hazardous waste facilities in Connecticut are immediately subject to and must comply with all applicable Connecticut hazardous waste requirements found in the Regulations of Connecticut State Agencies, Sections 22a-449(c)-100 through -110 and 22a-449(c)-11 of the Connecticut Hazardous Waste Management Regulations. When the DEP issues final RCRA hazardous waste permits, those permits will address all aspects of the Connecticut hazardous waste program.

for Richard J. Barlow
Chief
Waste Management Bureau

Date: May 24, 1993
Paper: Hartford Courant

UNITED TECHNOLOGIES PRATT&WHITNEY

400 Main Street
East Hartford, Connecticut 06108

May 17, 1993

RECEIVED
MAY 2 1 93

Mr. David A. Nash, Director
Waste Engineering and Enforcement Div.
Department of Environmental Protection
Bureau of Waste Management
165 Capitol Avenue
Hartford, CT 06106

RE: RCRA Part B Application - Attachment D - NFPA Certification - Section 43A

Dear Mr. Nash:

Enclosed please find the additional information requested in your correspondence dated April 27, 1993. Also enclosed is a revised section for the NFPA certification addressing NFPA 43A.

Pratt & Whitney currently identifies seven (7) waste streams that are classified by NFPA as class II oxidizers. These are identified below with their respective storage locations.

P&W ID	Description	Storage Location
5002	Nitric Acid >50% D001, D002, D006, D007, D008	Tank 01, container areas 27, 28
5002A	Nitric Acid >50%	Tank 01, container areas 27, 28
5001	Oxidizing Acid, General D001, D002, D006, D007, D008	Tank 01, container areas 27, 28
5001A	Oxidizing Acid, General D001, D002	Tank 01, container areas 27, 28
5041	Nitric Acid >50%, Hydrofluoric Acid D001, D002, D004, D005, D006, D007, D008	Tank 02, container areas 27, 28
5004A	Hydrogen Peroxide Solution 50% D001	Tank 01
5112	Chromic Acid Solids	container areas 029, 030, 032

A diagram of the facility is enclosed which highlights the storage locations intended for the storage of Class II oxidizers.

The fire suppression system on the east side of the facility utilizes water. NFPA 43-A, 4-4 specifies a water density of 0.2 GPM per sq. ft. over any 3750 sq. ft. area. The water system provided in this facility is designed for 0.3 GPM over 3000 sq. ft. which exceeds the NFPA requirement.

The additional information requested regarding Attachment D (Training Program) will be forthcoming.

If you have any questions or require further information, please contact me at (203) 565-9342. We thank you for your cooperation for expediting this request to allow these changes to be incorporated prior to issuance of public notice.

Sincerely,

Glen D. Bianchi
Sr. Environmental Engineer

GDB/saw:5c

cc: R. Barlow, Chief Bureau of Waste Management CT DEP
L. Clune, Waste Engineering and Enforcement Engineer CT DEP
G. Dews, Waste Engineering and Enforcement CT DEP
T. Keeney, Commissioner CT DEP
J. Podgurski, U.S. EPA
D. Sattler, Waste Engineering and Enforcement CT DEP

P. R. SHERMAN INC.
6 New England Executive Park • Suite 400 • Burlington, MA 01803
(617) 270-4102 • FAX (617) 272-3706

May 14, 1993
Project: 0170

Pratt & Whitney
400 Main Street
East Hartford, CT 06108

Attention: Glen D. Bianchi
Sr. Facilities Engineer
Facilities & Services
Operations

Re: Centralized Waste Storage & Transfer Facility
NFPA Code Review, NFPA 43A Update

Dear Mr. Bianchi:

As requested, please find enclosed an updated copy of our report on NFPA 43A, Storage of Liquid and Solid Oxidizers.

Please call if you have further questions.

Yours truly:

P.R. Sherman Inc.

Philip R. Sherman, P.E.
President

NFPA 43A Oxidizers

43A:1-1.1 This code shall apply to the storage of oxidizers that are liquid or solid at ambient conditions.

43A:1-1.1.1 Separate chapters specify requirements for storage of oxidizers by class when the quantities stored are greater than the stated minimums.

43A-1-1.1.2 This section indicates that quantities less than the minimum quantities regulation must comply with Chapter 2 and fire prevention regulations.

43A:1-1.1.3 This section refers to existing buildings and therefore does not apply.

43A:1-1.2 This code shall not apply to explosives or blasting agents, which are covered in NFPA 495, or to ammonium nitrate, covered in NFPA 490, or organic peroxides, which are covered in NFPA 43B.

Remarks: This is a permitted facility. The storage of explosives is not allowed by the draft Part B permit. There is no use of ammonium nitrate in this plant.

43A:1-1.3 This section states that the quantity and arrangement limits in this code shall not apply to the storage of oxidizers at manufacturing plants where oxidizers are manufactured.

Remarks: Oxidizers are not manufactured in this plant; there is no use or storage of ammonium perchlorate in this plant.

43A:1-2 The purpose of this code is to provide reasonable requirements for the safe storage of commercially available strengths of liquid and solid oxidizers. The hazards of stored oxidizers may manifest themselves in one or more of four hazardous situations.
a) They increase the burning rate of combustibles.
b) They may cause spontaneous ignition of combustible materials.
c) They may compose and liberate hazardous gases.
d) They may undergo self-sustained decomposition, which may result in an explosion

43A:1-3 Applicability of other documents. This section states that the requirements of NFPA 30 and NFPA 231 shall apply where applicable and where they are more restrictive than this code.

Remarks: See NFPA 231 review below.

43A:1-4 Equivalency. This section states that nothing in this code is intended to

prevent the use of systems, methods, or devices equivalent to those prescribed by this code, provided technical documentation is submitted to the authority having jurisdiction that demonstrates equivalency and that the system, method or device is approved for the intended purpose.

Remarks: None.

43A:1-5 This section provides various definitions.

43A:1-6 This section classifies oxidizers.

Class 1- slightly increases burning rate but does not cause spontaneous ignition.

Class 2- will cause moderate increase in burning rate or may cause spontaneous ignition of combustible materials with which it comes in contact.

Class 3- will cause a severe increase in burning rate or undergo vigorous spontaneous ignition.

Class 4- can undergo an explosive reaction. Will enhance burning rate and may cause spontaneous ignition of combustibles.

43A:1-7 This section classifies storage facilities as segregated, cutoff or detached.

Remarks: This facility is classified as segregated.

43A:2-1 This section states that design of a new facility for oxidizer storage shall be reviewed by the authority having jurisdiction and that emergency plans should be prepared.

Remarks: The East Hartford Fire Marshal has been identified as the authority having jurisdiction and has reviewed this project. A certificate of occupancy has been issued. The Connecticut DEP is the authority which will approve the contingency plan.

43A:2-2 This section states that all storage areas containing oxidizers shall be conspicuously identified by " Class xx oxidizer".

Remarks: The owner indicates that this signage is in place.

43A:2-3 This section refers to storage containers for liquid oxidizers which must meet certain requirements.

Remarks: This is an operational issue.

43A:2-3 This section applies to storage arrangements and limitations. Sub-sections of this section which apply are noted below:

- Tank material to be compatible with material stored.
- Designed in accordance with generally recognized standards, or legal regulations.
- Be provided with adequate vent.

Remarks: The engineer indicates that the above requirements are satisfied.

43A:2-4 This section states that oxidizers should be stored to avoid contact with incompatible materials.

Remarks: This facility is designed as segregated storage. Oxidizers are stored only in Tank 01 and Container locations 27, 28, 29, 30, and 32.

43A:2-4.2.2 This section states that when oxidizers are stored in segregated warehouses with flammable liquids, as in this situation, the oxidizer and the flammable liquid drums shall be separated by at least 25 feet. The separation shall be maintained by dikes, drains or floor slopes to prevent flammable liquid leakage from encroaching on the separation.

Remarks: Flammables are received and stored on the west side of the building. Oxidizers are received and stored on the east side. The two sides are separated by a four hour fire wall. Flammable and oxidizer storage is separated by greater than 25'.

43A:2-4.3 This section relates to oxidizer storage in retail areas and does not apply to this situation.

43A:2-5 This section states that when two or more different classes of oxidizers are stored in the same area, the maximum quantity permitted shall be limited to the sum of the proportion of each class to the maximum permitted for the class. The total shall not exceed 100 percent.

Remarks: Refer to the review of Chapters 3 through 6.

43A:2-6 This section refers to proper containment in storage facility design and consideration of possible smoke and toxic fumes in the event of a fire.

Remarks: Containment is addressed in 2-4.2.2.

43A:2-7 This section relates to the proper instruction of the employees handling oxidizers.

Remarks: The owner indicates that this is covered in Permit, Attachment D

"Training Program"

43A:2-8 This section address heating and electrical installations in the oxidizer storage area.

Remarks: All heating equipment is located above the level of oxidizer storage. Electrical equipment is being provided per NFPA 70.

43A:2-9 Smoking is not permitted in oxidizer storage areas.

Remarks: The owner indicates that appropriate signage is posted.

43A:2-10 This section states that maintenance or cutting and welding in oxidizer storage areas requires supervisory review.

Remarks: The plant fire department issues hot work permits and may supervise cutting and welding work in the facility.

43A:2-11 This section addresses the need for proper fire hydrants, water supply and sprinkler protection.

Remarks: A foam-water sprinkler system is being provided. Hydrants are provided in the area and a plant fire water system is provided.

43A:2-12 This section states that manual fire fighting equipment in the form of portable water extinguishers or water hose reel stations shall be provided per NFPA 10 and 14. Placement and use of dry chemical (ABC) or halon extinguishers is prohibited.

Remarks: Hose stations are provided. The owner has indicated that halon or dry chemical fire extinguishers will not be provided on the east side of the building.

43A:2-13 Housekeeping and waste disposal is critical in the oxidizer storage area.

Remarks: The owner indicates that daily inspections and housekeeping are addressed by Permit Attachment E, "Inspection Schedules".

43A:3-1 This chapter shall apply to the storage of Class 1 oxidizers where stored in quantities of in excess of 4000 lbs. Chapter 2, Basic Requirements, also applies to storage of Class 1 oxidizers.

Remarks: None.

43A:3-2-1 This section states that the storage of Class 1 oxidizers within this building. shall be segregated or cut off.

Remarks: This facility is designed as segregated storage. Oxidizers are stored only in Tank 01 and Container locations 27, 28, 29, 30, and 32. Requirements in this section for storage of Class 1 oxidizers in a sprinklered building. are limits are as follows: the building limit is 2000 tons, the pile limit is 200 tons, the pile height is 12 ft., the pile width is 24 ft., the maximum distance from any container to a working aisle is 12 ft., the distance to the next pile is equal to the pile height, the distance to the wall is 2 ft., and the distance to incompatible material is 8 ft.

43A:3-2.3 This section involves cut off or detached storage and does not apply.

43A:3-2.4 This section refers to storage in combustible buildings and does not apply.

43A:3-2.5 This section states that bulk storage, either in bins or piles, shall be separated from all other materials and in noncombustible bins.

Remarks: There is no bulk storage, as defined in NFPA 43A:2-3.3.3, except for Tank 01 which is noncombustible.

43A:3-3 This section states that sprinkler protection for Class 1 oxidizers shall be per NFPA 231. In noncombustible containers it is considered a Class 1 commodity.

Remarks: The design density required per 231 for a Class I commodity is 0.16 gpm/sf over 3000 sf. The sprinkler system being provided is designed to provide 0.30 gpm/sf over 3000 sf. The system design exceeds the requirements.

43A:4-1 This chapter shall apply to Class 2 oxidizers in quantities in excess of 1000 lbs. Chapter 2 also applies.

43A:4-2 This section states that storage of Class 2 oxidizers shall be segregated, cut off or detached. Storage must be limited per Table 4-2(b) which outlines amounts which can be stored.

Remarks: This facility is designed as segregated storage. Oxidizers are stored only in Tank 01 and Container locations 27, 28, 29, 30, and 32. Requirements in this section for storage of Class 2 oxidizers in a sprinklered building are as follows: the building limit is 100 tons, the pile limit is 20 tons, the pile height is 8 ft., the pile width is 16 ft., the maximum distance from any container to a working aisle is 8 ft., the distance to the next pile is equal to the pile height, the distance to the wall is 2 ft., and the distance to incompatible material is 12 ft.

43A:4.2.4 This section applies only to cutoff or detached buildings.

43A:4-3 This section states that storage of oxidizers in combustible containers shall be provided with means to vent fumes in a fire emergency.

Remarks: Continuous ventilation is provided. Manually controlled, high capacity roof fans are provided.

43A:4-4 The sprinkler protection required for the storage of Class 2 oxidizers is 0.20 gpm/sf over 3750 sf.

Remarks: The water-foam system being provided is designed for 0.30 gpm/sf over 3000 sf. The engineer has indicated that the system will also provide 0.20 gpm/sf over 3750 sf.

43A:5 This applies to the storage. of Class 3 oxidizers in excess of 200 lbs. Chapter 2 also applies.

Remarks: This is a permitted facility. The storage of Class III oxidizers is not allowed by the draft Part B permit.

43A:6 This section applies to Class IV oxidizers which are permitted only in detached buildings.

Remarks: This is a permitted facility. The storage of Class III oxidizers is not allowed by the draft Part B permit.

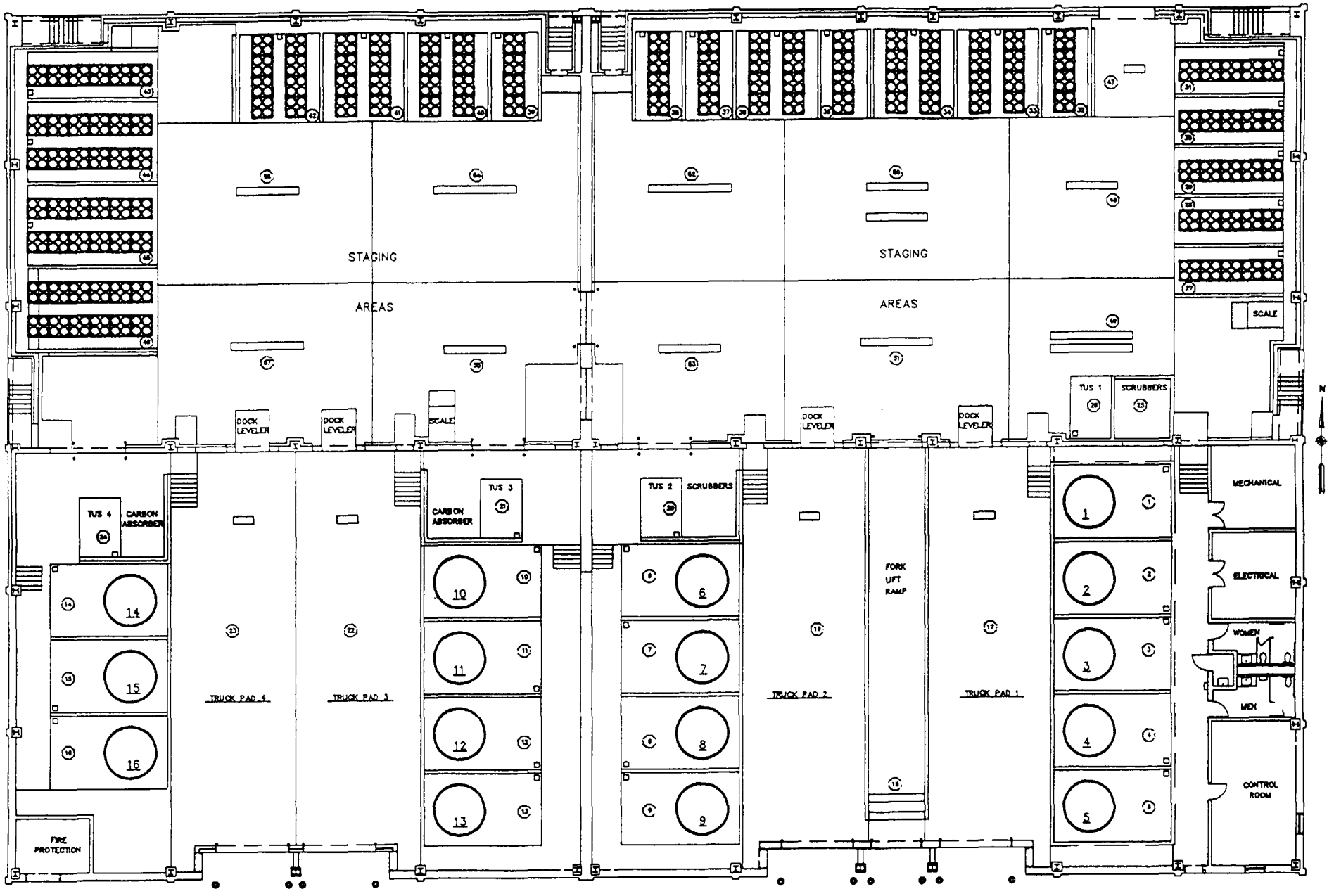
STAGING
AREAS
STAGING
AREAS
SCALE
DOCK LEVELER
DOCK LEVELER
SCALE
DOCK LEVELER
DOCK LEVELER
TUS 1
SCRUBBERS
TUS 4
CARBON ABSORBER
CARBON ABSORBER
TUS 3
TUS 2
SCRUBBERS
FORK LIFT RAMP
MECHANICAL
ELECTRICAL
WOMEN
MEN
CONTROL ROOM
FIRE PROTECTION
TRUCK PAD 4
TRUCK PAD 3
TRUCK PAD 2
TRUCK PAD 1
N

FLOOR PLAN

STATE OF CONNECTICUT
DEPARTMENT OF ENVIRONMENTAL PROTECTION

April 27, 1993

MAY 0 5 93

Glen D. Bianchi
Senior Environmental Engineer
Pratt & Whitney, MS-122-16
400 Main Street
East Hartford, CT 06108

Dear Mr. Bianchi:

In response to the Pratt & Whitney (P&W) submittals of March 19, 1993 and March 26, 1993, DEP has reviewed these requests and has determined that they are presently not acceptable. Your March 19, 1993 submittal requested an increase in the storage capacity for Class II and Class III oxidizers to 200,000 pounds and 100,000 pounds respectively within the Draft RCRA Part B Permit. The March 26, 1993 submittal was a revised Training Program for Attachment D of the Draft Permit.

Your request for an increase in oxidizer storage capacity also included corrections to the August 5, 1992 National Fire Prevention Association Certification. This Certification dated March 17, 1993 for NFPA Code 43A does not adequately detail compliance with NFFA 43A and therefore does not lend the appropriate support for P&W's ability to handle this increase in oxidizer storage capacity. The Certification should detail the type of oxidizer storage and specify how these oxidizers are to be handled. The Certification should also include the following:

- The chemical names, amounts, and hazard ratings;
- The storage layout, description and diagram;
- Any problems regarding use of water or foam for fire suppression; and Any additional safety precautions to be used.

In regards to the March 26, 1993 revised Training Program, the following information is required to be included in this submission:

- Page numbers, as necessary;
- Page revision dates;
- A listing of the job titles included for each job function category at East Hartford (i.e., - Hazardous Waste Handler includes Foreman, Treatment Operator, etc.);
- A description/outline for each course;
- Certification that <u>all</u> personnel working within the Centralized Waste Storage and Transfer Facility (CWS&TF) shall be trained in accordance with the Contingency Plan; and

- Emergency response personnel (e.g., P&W Fire Department) titles, responsibilities and appropriate training must be included.

The above-requested information should be submitted to DEP as soon as it is complete. It may not be possible to incorporate this information into the Draft Permit prior to the Draft's Public Notice. If, in fact, DEP does Public Notice the Draft Permit prior to receipt of your latest submission, these issues would be addressed during the Public Notice comment period and/or during any Hearing Proceedings.

If you have any questions regarding this letter, please contact Lynn M. Clune of my staff at 566-4869.

Sincerely,

David A. Nash
Director
Waste Engineering and
Enforcement Division
Waste Management Bureau

DAN:LMC:sr

cc: T. Keeney, Commissioner CTDEP
R. Barlow, Chief Bureau of Waste Management
G. Dews, WEED
D. Sattler, WEED
J. Podgurski, US EPA-Region 1

UNITED TECHNOLOGIES PRATT&WHITNEY

400 Main Street
East Hartford, Connecticut 06108

Note: This letter was misplaced and not delivered to John Podgurski until 6/4/93. JRP

June 17, 1992

Mr. David A. Nash
Director, Waste Engineering and Management Division
State of Connecticut
Department of Environmental Protection
165 Capitol Avenue
Hartford, CT 06106

RE: 1) Pratt & Whitney East Hartford Plant RCRA Part B Permit Application EPA I.D. No. CTD990672081
2) Meeting between CTDEP & P&W on June 5, 1992

Dear Mr. Nash:

The Pratt & Whitney, 400 Main Street, East Hartford plant is in the process of constructing the Centralized Waste Storage & Transfer Facility for the management of hazardous waste. This facility will replace an older, existing facility at the same location. The new facility has incorporated automation and best management practices in its design to meet UTC's goal to be a world class environmental corporation. This improvement, reflected in our RCRA Part B Permit Application for the facility, is a new 41,750 square foot replacement storage facility with 16 bulk storage tanks and 20 container storage areas. Pratt & Whitney is constructing this facility to meet federal, state and local requirements regarding the storage of hazardous wastes for periods of less than one year. This replacement facility incorporates the same processes and storage capacities as the existing facility.

As the construction of this facility nears completion and we approach issuance of the Part B permit, we would like to confirm our previous agreements with DEP regarding two scenarios pertaining to the use of this facility and the date of issuance of the RCRA Part B permit.

Under the first scenario, the facility construction is completed and the facility is tested and found to be fully operational prior to issuance of the permit. We understand from our previous discussions that both P & W and DEP agree that the facility may be utilized under interim status until such time as the permit is issued. As we discussed in our meetings with DEP,

a short transition period of approximately six weeks will be required to move the operations currently performed in the existing facilities into the new facility. During this six week period of time, both the existing and new facilities will operate under interim status. The transition period will begin once the new facility has been tested and found to be fully operational. When the transition is complete, the existing facilities would no longer be operated under interim status and P & W would notify DEP of this occurrence in writing. We are hereby requesting written confirmation from DEP of your agreement with this position.

Under the second scenario, the RCRA Part B permit is issued prior to the new facility being fully operational and the transition into the new facility having been completed. In this case, P & W is requesting that DEP include a schedule in the permit which would allow for the continued operation of the existing facilities under interim status until such time as the new facility is fully operational and the transition into this facility is complete. P & W believes that construction of the facility and testing to ensure that it is fully operational will be complete by January 1, 1993. Allowing for a six week transition period, we believe a compliance date for loss of interim status for the existing facilities of February 15, 1993 would be appropriate. Therefore, P & W is hereby requesting that the RCRA Part B permit include a compliance date for loss of interim status for the existing facilities of February 15, 1993.

We appreciate DEP's assistance and cooperation in this matter and look forward to your response. Should you have any questions regarding this matter, please contact Paul Guilmette at 557-0999 at your convenience.

Sincerely,

R. C. Weiss
Director, Facilities & Services

RCW/TL/dmp

T-T10Y

cc: Richard J. Barlow, Bureau Chief, Waste Management
George Dews, Waste Engineering & Enforcement
Timothy R. E. Kenney, Commissioner, CT DEP
Robert Moore, Deputy Commissioner, CT DEP
John Podgarski, US EPA

UNITED TECHNOLOGIES
PRATT&WHITNEY

400 Main Street
East Hartford, Connecticut 06108

EAST HARTFORD
JUN 29 92
CONN.

U.S. POSTAGE
$0.29
METER
9003423

Mr. John Podgurski
Waste Management Division
U. S. EPA, REgion I
JFK Federal Bldg (HER-CAN 6)
B st^n, MA 02203

September 26, 1991

Mr. Richard Barlow
Bureau Chief
Waste Management Bureau
Department of Environmental Protection
State of Connecticut
165 Capitol Avenue
Hartford, CT 06106

RE: 40 CFR Part 270.72 - Changes during interim status

Dear Mr. Barlow:

As you are aware, the Pratt & Whitney 400 Main Street, East Hartford facility is in the process of constructing a Hazardous Waste Storage facility to replace an old existing facility at the same location. The new facility has incorporated automation and best management practices in its design to meet UTC's goal to be a world class environmental corporation. This improvement, reflected in our existing Part B Application dated September 5, 1991, is a new 41,750 square foot replacement storage facility with 16 bulk storage tanks and 20 container storage areas. Pratt & Whitney is constructing this facility to meet federal, state and local requirements regarding the storage of hazardous wastes for periods of less than one year. This replacement facility incorporates the same processes and storage capacities as the existing facility. There will be a short transition period between the two facilities. This transition will take place in two phase, phase 1 for the container storage area and phase 2 for the bulk tank storage area. It is estimated that the transition will last for approximately 3 to 6 weeks.

In summary, it is Pratt & Whitney's opinion that an interim status facility can make changes to their facility as granted by 40CFR 270.72 (b)(1) and (b)(2) even if the changes amount to reconstruction. Therefore, it is Pratt & Whitney's intention to proceed with utilizing the new Concentrated Waste Storage and Transfer Facility as an interim status facility when construction is completed. If you have any problems regarding this interpretation please contact Mr. Bryan Kielbar'a at 565-0903 at your earliest convenience.

Sincerely,

R.C. Weiss
Director, Facilities & Services

RCW/BFK/dag

bry-blk

STATE OF CONNECTICUT
DEPARTMENT OF ENVIRONMENTAL PROTECTION

DRAFT

Permit for the Storage of
Hazardous Waste in Tanks and Containers

FACT SHEET

May 24, 1993
EPA ID No. CTD990672081

I. Name and Address of Permittee

Pratt & Whitney
United Technologies Corporation
400 Main Street
East Hartford, CT 06108

II. Facility Type

Pratt & Whitney (P&W) has submitted an application to the Connecticut Department of Environmental Protection for a permit to store hazardous waste in tanks and containers for greater than 90 days.

III. Description of Facility and Wastes Managed

This facility designs, manufactures, assembles, and tests aircraft jet engines and engine components. Hazardous wastes are generated at this site by fabricating, cleaning, finishing, coating, testing, and research operations.

The facility handles a large variety of hazardous wastes from both on-site and off-site operations. Wastes received from off-site are similar to those already being generated on-site and the waste streams are mixed. Presently there are eleven general categories of wastes - acid; alkalies; chromium; cyanides; solvents; oils; organic solids; paint wastes; F006 sludge/debris; inorganic solids; and laboratory chemicals and commercial chemical products. The wastes will be stored in 16 storage tanks and 20 container storage areas in the Centralized Waste Storage and Transfer Facility (CWS&TF). In addition, the CWS&TF will be capable of storing other materials in the permitted hazardous waste storage areas. These other materials may consist of non-hazardous wastes and non-waste materials. These other materials permitted for storage have been reviewed and approved for storage by DEP and must meet management standards similar to hazardous waste stored in most cases.

The wastes handled include:

1. D001 - D043

2. F001 - F009

3. P010, P015, P029, P030, P098, P104, P106

4. U002, U019, U021, U031, U032, U044, U052, U055, U056, U077, U080, U108, U112, U117, U121, U122, U133, U134*, U138, U140, U144, U151, U154, U159, U161, U165, U188, U201, U210, U211, U220, U223, U226, U228, U239

* Anhydrous Hydrofluoric Acid, Hydrofluoric Acid Gas, Flouhydric Acid Gas, and HFA (when used as an abbreviation for the previous synonyms) are prohibited.

IV. Permit Basis

The conditions of this Permit are based upon applicable sections of the Regulations of the Connecticut State Agencies adopted pursuant to Section 22a-449(c) of the Connecticut General Statutes. In many sections of Connecticut's Hazardous Waste Management Regulations references are made to the Federal (RCRA) Hazardous Waste Regulations. The Federal Regulations referenced include the technical and administrative standards for hazardous waste facilities in 40 CFR Part 264 and 40 CFR Part 270.

V. Significant Information

A. Wastes which are specifically prohibited from being managed at the facility.

In Section II of the Draft Hazardous Waste Permit it lists specific prohibitions that apply to wastes being managed at the facility. These prohibitions are based on:

1. The National Fire Protection Association (NFPA) hazardous materials classifications described in NFPA 704, NFPA 325M, and NFPA 49. These hazard classifications rank the degree of hazard under each of the following categories: Health, Flammability, and Reactivity. The degree of hazard rankings range form 0 to 4, with the higher value indicating the more hazardous materials.

2. The NFPA classification described in NFPA 43A. These hazard classifications are ranked by class, which range from 1 to 4, with the higher value indicating the more hazardous materials.

3. The NFPA classifications described in NFPA 43B. These hazard classifications are ranked by class, which range from I to V, with the lower value (numeral) indicating the more hazardous materials.

4. The NFPA classifications described in NFPA 43C. These hazard classifications are described and ranked as defined in NFPA 704, NFPA 325M, and NFPA 49.

In determining which prohibitions to apply, the DEP considered whether the permit application adequately demonstrated the facility's ability to properly manage hazardous wastes and other materials for each of the NFPA hazard classifications and whether compliance with applicable NFPA standards for such storage was demonstrated.

Pratt & Whitney is prohibited from storing wastes as noted below:

a) Listed and Characteristic Waste with a Health Hazard rating of 4 as defined in NFPA 704, Degree of Hazard Criteria, most recent edition.

   Rationale: Pratt & Whitney has not shown that during normal operations, the level of personnel protection and management protocols are adequate for the handling of these materials, and that under emergency conditions, the contingency plan adequately addresses how the company will implement this plan to mitigate situations involving these materials. P&W has agreed not to manage Health 4's at this time.

b) Materials that are pyrophoric, (See NFPA 704, most recent edition).

   Rationale: Pratt & Whitney does not manage pyrophoric wastes or other materials.

c) Shock sensitive materials, (See NFPA 704, most recent edition).

   Rationale: Pratt & Whitney does not manage shock sensitive wastes or other materials.

d) Explosive materials, as defined in 49 CFR 173 Subpart C.

Rationale: Pratt & Whitney does not manage explosive wastes and other materials.

e) Special Hazards: (These limitations apply per area, where applicable)

i) Liquid and Solid Oxidizing Materials, as defined in NFPA 43A:
Class 2 oxidizers in excess of 1,000 pounds,
Class 3 oxidizers in excess of 200 pounds,
Class 4 oxidizers in excess of 10 pounds,

ii) Organic Peroxide Formulations, as defined in 43B;
Class I organic peroxides,
Class II organic peroxides,
Class III organic peroxides in excess of 1,500 pounds,
Class IV organic peroxides in excess of 100,000 pounds.

iii) Gaseous Oxidizers, as defined in NFPA 43C.

Rationale: Restrictions have been placed on the storage of wastes that are identified as liquid and solid oxidizers, organic peroxide formulations, and gaseous oxidizers above, because Pratt & Whitney has not demonstrated compliance with applicable NFPA standards. Pratt & Whitney has requested to handle additional amounts of liquid and solid oxidizers and has submitted information to demonstrate compliance with NFPA 43A. This information has not yet been reviewed. If the information is deemed acceptable, P&W may be allowed to store these wastes in excess of the limits set in (e)(i) above.

VI. Additional Information:

Materials available for inspection with respect to this permit include:

1. The hazardous Waste facility permit application;

2. The Draft Hazardous Waste facility permit;

3. The Public Notice for the Draft facility permit; and

4. The Administrative record of the permit application review, approval, and permit-writing processes.

Items 2 and 3 are available at the following location anytime between 8:30 a.m. and 4:30 p.m., Monday through Friday excluding state and/or federal holidays:

R. Bryan Fitzgerald, Town Clerk
740 Main Street
East Hartford, CT 06108
Telephone: (203) 291-7100

Items 1 through 4 are available for inspection at the DEP offices in Hartford

any time between 8:30 a.m. and 4:30 p.m., Monday through Friday excluding state and/or federal holidays:

Department of Environmental Protection
Waste Management Bureau
Waste Engineering and Enforcement Division
18-20 Trinity Street, Second Floor
Hartford, CT 06106
Telephone: (203) 566-4869

STATE OF CONNECTICUT
DEPARTMENT OF ENVIRONMENTAL PROTECTION

MEMORANDUM

TO: P&W Draft RCRA Part B Hazardous Waste Storage Permit

FROM: David A. Nash, Director, Waste Engineering and Enforcement Division

DATE: May 24, 1993

RE: Additional Storage For Solid and Liquid Oxidizers

On May 17, 1993, P&W submitted additional information regarding an increase in the amount of oxidizers storage as allowed by the Draft Permit. The Draft Permit presently prohibits the amount of oxidizer pile storage as follows:

Class 2 oxidizers in excess of 1,000 pounds, and

Class 3 oxidizers in excess of 200 pounds.

P&W has requested that the following prohibitions apply:

Class 2 oxidizers in excess of 20 tons (40,000 pounds), and

Class 3 oxidizers in excess of 10 tons (20,000 pounds).

The information that P&W submitted regarding the additional storage amounts has not yet been reviewed. Once reviewed this information may be included in the Draft Permit prior to final issuance without further notice.

If you have any questions, please contact Lynn M. Clune at 566-4869

DAN:LMC:lmc

PUBLIC NOTICE

Pratt and Whitney
East Hartford, Connecticut
CTD 990672081

The following is a Public Notice from the Connecticut Department of Environmental Protection:

The Department of Environmental Protection (DEP) has made a tentative determination to issue a hazardous waste facility storage permit to Pratt and Whitney, a division of United Technologies Corporation, located at 400 Main Street in East Hartford, Connecticut. The proposed permit sets forth the necessary standards and conditions to ensure that the facility complies with all State and Federal hazardous waste regulations. The permit will allow Pratt and Whitney to continue to store hazardous waste in tanks and containers.

The draft permit, a fact sheet, and other materials are available for public inspection at the DEP offices on the second floor at 18-20 Trinity Street in Hartford, CT and at the Office of the Town Clerk at the Town Hall, 740 Main Street in East Hartford, CT. Comments on the draft permit or requests for a public hearing are invited from interested persons. Prior to making a decision to approve or deny the permit, the DEP will consider all comments which are received by

For more information regarding the application contact Lynn Clune of the Waste Management Bureau of the Department of Environmental Protection at 566-4869.

for Richard J. Barlow
Chief
Waste Management Bureau
Department of Environmental Protection

Date: May 24, 1993
Radio Station: WTIC (AM)

PUBLIC NOTICE

Pratt and Whitney
East Hartford, Connecticut
CTD990672081

In accordance with Chapters 439 and 446k of the Connecticut General Statutes, the Connecticut Department of Environmental Protection (DEP) is hereby providing Public Notice concerning the intent to issue a hazardous waste storage facility permit to Pratt and Whitney (P&W), a division of United Technologies Corporation (UTC), located at 400 Main Street, in East Hartford, Connecticut. P&W has been operating a hazardous waste storage facility under Resource Conservation and Recovery Act (RCRA) Interim Status, pursuant to Section 22a-449(c) of the Connecticut General Statutes since 1980.

The principal business of P&W is design, manufacture, assembly, and testing of aircraft jet engines and engine components, including:

- Fabricating,
- Cleaning,
- Finishing,
- Coating,
- Testing, and
- Research Operations.

The types of hazardous wastes generated on-site and received at the facility from the above activities can be divided into the following general categories:

- Acids,
- Alkalies,
- Chromium,
- Cyanides,
- Solvents,
- Oils,
- Organic Solids,
- Inorganic Solids,
- Paint Wastes,
- Metal Hydroxide Sludge/Debris, and
- Laboratory Chemicals and Commercial Chemical Products.

P&W intends to store on-site and receive from other United Technologies Corporation (UTC) facilities both characteristic and listed hazardous wastes generated from similar process sources.

After receipt, the hazardous waste chemicals are stored with hazardous waste and other materials being sent off-site for further treatment, storage or disposal at approved and permitted RCRA facilities or it is treated in the NPDES Permitted Wastewater Treatment System. No hazardous wastes are disposed of on-site. All hazardous wastes are either treated on-site or shipped off-site to an approved and permitted facility.

P&W utilizes both containers and tanks in order to managed hazardous wastes on-site. The facility is designed to manage 59,400 gallons of hazardous waste and other materials on-site in containers, and 96,000 gallons of hazardous waste and other materials on-site in tanks.

The Commissioner of DEP is authorized to approve or deny a hazardous waste facility permit pursuant to Section 22a-449(c)-100 through -110 of Connecticut's Hazardous Waste Management Regulations. On the basis of a review by staff members of DEP in accordance with Section 22a-449(c)-100 through -110 of the Regulations of the Connecticut State Agencies and Sections 264 and 270 of Title 40 of the Code of Federal Regulations, the Commissioner of DEP has made a tentative determination that hazardous wastes can be properly managed at the facility.

A Draft hazardous storage facility Permit has been prepared for the Pratt and Whitney, 400 Main Street, East Hartford facility. This Permit is for receipt of hazardous wastes from off-site UTC facilities, and for storing wastes generated on-site and received from off-site UTC facilities for greater than ninety (90) days prior to treatment or disposal off-site. The Draft hazardous waste Permit contains terms and conditions that are designed to include all performance standards applicable to the facility in accordance with the above cited statutes and regulations, as well as additional conditions deemed necessary by DEP in order to protect human health and the environment.

The Draft facility Permit, a fact sheet for the Draft facility Permit, and other materials are available for public inspection at the Connecticut Department of Environmental Protection office between 8:30 a.m. and 4:30 p.m. Monday through Friday, and at the East Hartford Town Clerk's Office at the Town Hall between 8:30 a.m. and 5:00 p.m. Monday through Friday, excluding state and/or federal holidays:

Department of Environmental Protection
Waste Management Bureau
Waste Engineering and Enforcement Division
165 Capitol Avenue
Hartford, CT 06106
Telephone: (203) 566-4869

R. Bryan Fitzgerald, Town Clerk
740 Main Street
East Hartford, CT 06108
Telephone: (203) 291-7100

Any person may submit written comments on the issuance of the Draft Permit to DEP any time within 45 days of this Public Notice and these comments will also be entered into the administrative record. These written comments should be sent to:

Lynn M. Clune
Department of Environmental Protection
Waste Management Bureau
Waste Engineering and Enforcement Division
165 Capitol Avenue
Hartford, CT 06106

Interested parties may also contact Lynn M. Clune, of the Waste Engineering and Enforcement Division, at (203) 566-4869, from 8:00 a.m. until 3:00 p.m. on weekdays for further information.

The State of Connecticut DEP has received final authorization to administer the RCRA hazardous waste program in lieu of the Federal Government. Therefore, Hazardous waste facilities in Connecticut are immediately subject to and must comply with all applicable Connecticut hazardous waste requirements found in the Regulations of Connecticut State Agencies, Sections 22a-449(c)-100 through -110 and 22a-449(c)-11 of the Connecticut Hazardous Waste Management Regulations. When the DEP issues final RCRA hazardous waste permits, those permits will address all aspects of the Connecticut hazardous waste program.

for Richard J. Barlow
Chief
Waste Management Bureau

Date: May 24, 1993
Paper: Hartford Courant

PUBLIC NOTICE

Pratt and Whitney
East Hartford, Connecticut
CTD990672081

In accordance with Chapters 439 and 446k of the Connecticut General Statutes, the Connecticut Department of Environmental Protection (DEP) is hereby providing Public Notice of a hearing concerning the intent to issue a hazardous waste storage facility Permit to Pratt and Whitney (P&W), a division of United Technologies Corporation (UTC), located at 400 Main Street, in East Hartford, Connecticut. P&W has been operating a hazardous waste storage facility under Resource Conservation and Recovery Act (RCRA) interim status as provided by Section 22a-449(c)-100 through 110 of the Regulations of Connecticut State Agencies (RCSA) since 1980.

Time and Date of Hearing:

6:30 PM, September 28, 1993 and continue as necessary

Location of Hearing:

East Hartford Middle School
School Auditorium
777 Burnside Avenue
East Hartford CT

The principal business of P&W is design, manufacture, assembly, and testing of aircraft jet engines and engine components, including:

- Fabricating,
- Cleaning,
- Finishing,
- Coating,
- Testing, and
- Research Operations.

The types of hazardous wastes generated on-site and received at the facility from the above activities can be divided into the following general categories:

- Acids,
- Alkalies,
- Chromium,
- Cyanides,
- Solvents,
- Oils,
- Organic Solids,
- Inorganic Solids,
- Paint Wastes,
- Metal Hydroxide Sludge/Debris, and
- Laboratory Chemicals and Commercial Chemical Products.

P&W intends to store on-site and receive from other United Technologies Corporation (UTC) facilities both characteristic and listed hazardous wastes generated from similar process sources.

After receipt, the hazardous waste chemicals are stored with hazardous waste and other materials being sent off-site for further treatment, storage or disposal at approved and permitted RCRA facilities or it is treated in the NPDES Permitted Wastewater Treatment System. No hazardous wastes are disposed of on-site. All hazardous wastes are either treated on-site or shipped off-site to an approved and permitted facility.

P&W utilizes both containers and tanks in order to manage hazardous wastes on-site. The facility is designed to manage 59,400 gallons of hazardous waste and other materials on-site in containers, and 96,000 gallons of hazardous waste and other materials on-site in tanks.

The Commissioner of DEP is authorized to approve or deny a hazardous waste facility permit pursuant to Section 22a-449(c)-100 through -110 of Connecticut's Hazardous Waste Management Regulations. On the basis of a review by staff members of DEP in accordance with Section 22a-449(c)-100 through -110 of the Regulations of the Connecticut State Agencies and Sections 264 and 270 of Title 40 of the Code of Federal Regulations, the Commissioner of DEP has made a tentative determination that hazardous wastes can be properly managed at the facility.

A Draft hazardous waste storage facility Permit has been prepared for the Pratt and Whitney, 400 Main Street, East Hartford facility. This Permit is for receipt of hazardous wastes from off-site UTC facilities, and for storing hazardous wastes generated on-site and received from off-site UTC facilities for greater than ninety (90) days prior to treatment or disposal off-site. The Draft hazardous waste Permit contains terms and conditions that are designed to include all performance standards applicable to the facility in accordance with the above cited statutes and regulations, as well as additional conditions deemed necessary by DEP in order to protect human health and the environment. P&W has requested changes to the Draft Permit that was public noticed on May 24, 1993. These changes involve the increase in the quantity of oxidizer storage capacity allowed in the May Draft Permit and inclusion of an updated Contingency Plan for the facility.

The Draft facility Permit, a fact sheet for the Draft facility Permit, and other materials are available for public inspection at the Connecticut Department of Environmental Protection offices between 8:30 a.m. and 4:30 p.m. Monday through Friday, and at the East Hartford Town Clerk's Office at the

Town Hall between 8:30 a.m. and 5:00 p.m. Monday through Friday, excluding state and/or federal holidays. Locations are as follows:

Department of Environmental Protection
Waste Management Bureau
Waste Engineering and Enforcement Division
79 Elm Street
PO Box 5066
Hartford, CT 06102-5066
Telephone: (203) 566-4869

R. Bryan Fitzgerald, Town Clerk
740 Main Street
East Hartford, CT 06108
Telephone: (203) 291-7100

At the Public Hearing, any person may submit oral or written comments on the issuance of the Draft Permit. These comments will be entered into the official record. The hearing will be conducted in accordance with Chapter 54 of the Connecticut General Statutes and the Department's Rules of Practice, Section 22a-3a-1 of the Regulations of Connecticut State Agencies. Interested persons may submit written comments to DEP any time within 30 days of this Public Notice, or anytime before the close of the Public Hearing whichever is later. These comments will also be entered into the official record. Written comments should be sent to:

Deborah Green
Department of Environmental Protection
Adjudications Unit
79 Elm Street
PO Box 5066
Hartford CT 06102-5066

Interested parties may also contact Lynn M. Clune, of the Waste Engineering and Enforcement Division, at (203) 566-4869, from 8:00 a.m. until 3:00 p.m. on weekdays for further information.

The State of Connecticut DEP has received final authorization to administer the RCRA hazardous waste program in lieu of the Federal Government. Therefore, Hazardous waste facilities in Connecticut are immediately subject to and must comply with all applicable Connecticut hazardous waste requirements found in the Regulations of Connecticut State Agencies, Sections 22a-449(c)-100 through -110 and 22a-449(c)-11. When the DEP issues final RCRA hazardous waste permits, those permits will address all aspects of the Connecticut hazardous waste program.

Date: August 27, 1993
Paper: Hartford Courant

PUBLIC NOTICE

Pratt and Whitney
East Hartford, Connecticut
CTD 990672081

The following is a Public Notice from the Connecticut Department of Environmental Protection:

The Department of Environmental Protection (DEP) has made a tentative determination to issue a hazardous waste facility storage Permit to Pratt and Whitney, a division of United Technologies Corporation, located at 400 Main Street in East Hartford, Connecticut, and are hereby providing notice of the Public Hearing concerning the Permit. The hearing will be held on September 28, 1993 at the East Hartford Middle School Auditorium, 777 Burnside Avenue in East Hartford at 6:30 PM and continue if necessary on September 30 and October 1, 1993 at the Department of Environmental Protection, 79 Elm Street in Hartford at 10:00 AM.

The Draft Permit, a fact sheet, and other materials are available for public inspection between 8:30 AM and 4:30 PM, Monday through Friday at the DEP offices at 79 Elm Street in Hartford, CT and during normal office hours at the Office of the Town Clerk at the Town Hall, 740 Main Street in East Hartford, CT. At the Public Hearing, any person may submit oral or written comments on the issuance of the Draft Permit. Interested persons may also submit written comments to DEP any time within 30 days of this Notice, or at any time before the close of the Public Hearing, whichever is later. Prior to making a decision to approve or deny the Permit, the hearing officer will consider all comments from the public received by this date.

For more information regarding this Notice contact Lynn Clune of the Waste Management Bureau of the Department of Environmental Protection at 566-4869.

Date: August 27, 1993
Radio Station: WTIC (AM)